29/08/99

TIP PROJECT: B-4404

WBS: 33684.3.1

See Sheet 1-A For Index of Sheets

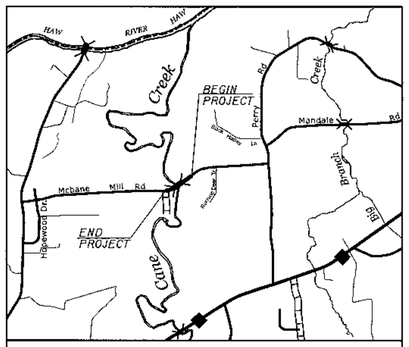

VICINITY MAP

STATE OF NORTH CAROLINA
DIVISION OF HIGHWAYS

ALAMANCE COUNTY

STATE	STATE PROJECT REFERENCE NO.	SHEET NO.	TOTAL SHEETS
N.C.	B-4404	1	

STATE PROJ. NO.	F. A. PROJ. NO.	DESCRIPTION
33684.1.1	BRZ-2181(1)	P.E.
33684.3.1	BRZ-2181(1)	CONST.

LOCATION: BRIDGE NO. 102 ON SR 2181 OVER SOUTH FORK CANE CREEK

TYPE OF WORK: BRIDGE REPLACEMENT WITH PRESTRESSED CONCRETE BOX BEAM SPANS ON PILE END BENT AND END BENT ON SPREAD FOOTING WITH INTERIOR BENT AND ROADWAY APPROACHES.

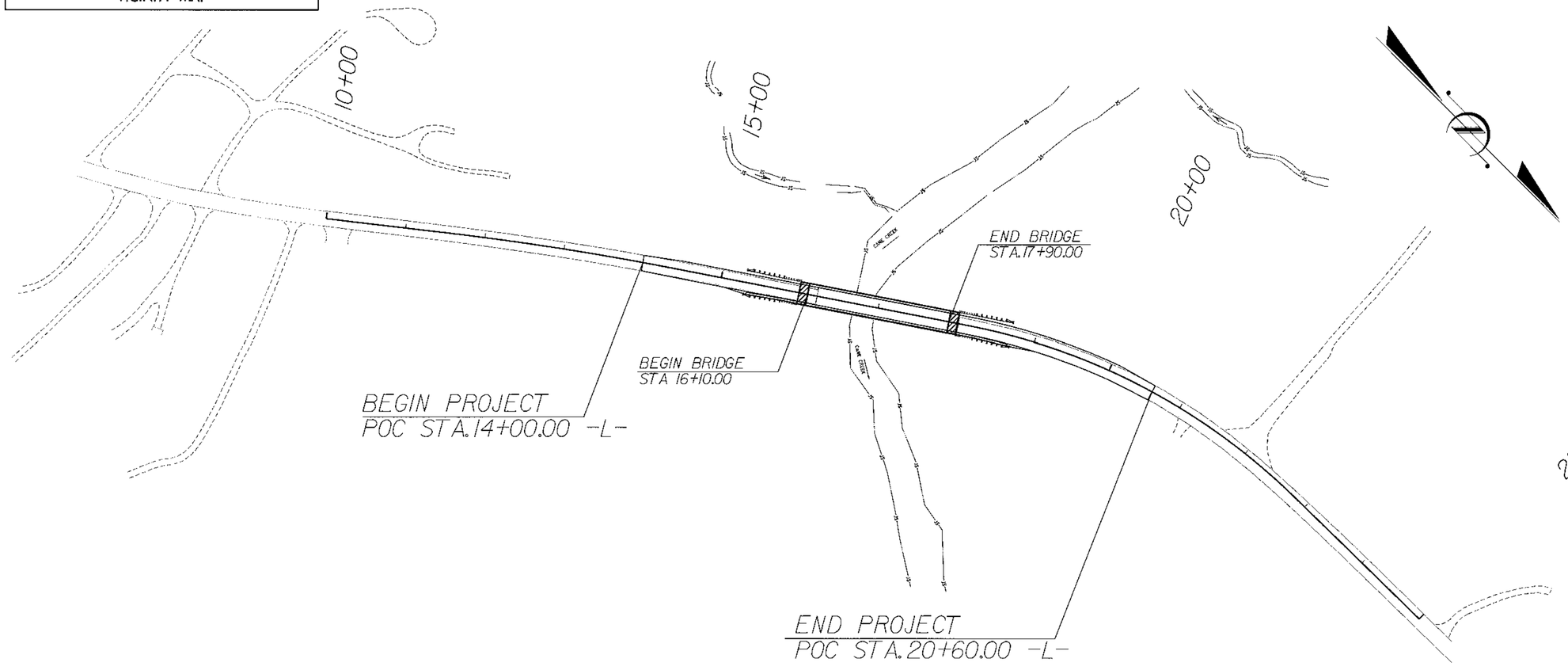

GRAPHIC SCALES

50 25 0 50 100
PLANS

50 25 0 50 100
PROFILE (HORIZONTAL)

10 5 0 10 20
PROFILE (VERTICAL)

DESIGN DATA

ADT 2007	=	350
ADT 2030	=	700
DHV	=	N.A.%
D	=	N.A.%
T	=	3 %
V	=	40 MPH

PROJECT LENGTH

ROADWAY	=	0.353	MI.
BRIDGE	=	0.034	MI.
TOTAL	=	0.387	MI.

Prepared In the Office of:

Stantec

Stantec Consulting Inc.
Suite 300, 801 Jones Franklin Road
Raleigh, NC U.S.A.
27606
Tel. 919.851.6866
Fax. 919.851.7024
www.stantec.com

FOR THE NORTH CAROLINA DEPARTMENT OF TRANSPORTATION

2006 STANDARD SPECIFICATIONS

RIGHT OF WAY DATE:

LETTING DATE:
OCT. 27, 2009

JOE KELVINGTON, PE
PROJECT ENGINEER

ROBERT WILLIAMS, PE
PROJECT DESIGN ENGINEER

HYDRAULICS ENGINEER

NORTH CAROLINA PROFESSIONAL SEAL 034257 ENGINEER C.W. GASKILL, JR.

SIGNATURE: *P.E.* 9/8/09

ROADWAY DESIGN

NORTH CAROLINA PROFESSIONAL SEAL 31622 ENGINEER ROBERT A. WILLIAMS

SIGNATURE: *P.E.* 9/8/09

DIVISION OF HIGHWAYS
STATE OF NORTH CAROLINA

STATE OF NORTH CAROLINA · DEPARTMENT OF TRANSPORTATION

P.E.
STATE HIGHWAY DESIGN ENGINEER

9/8/2009
U:\Roadway\Proj\3404_rcy_tsh.dgn
rawilliams

BEGIN PROJECT
POC STA.14+00.00 -L-

-L- POT Sta. 10+00.00

JOHN E. TIMMONS
DB 674 PG 544

JAMES D. & FRANCES W. WILLIAMS
DB 288 PG 503

FRANCES G. & FRED J. MANESS
DB 1418 PG 406

PI Sta 12+92.89
Δ = 4° 18' 21.4" (RT)
D = 1° 25' 56.6"
L = 300.61'
T = 150.38'
R = 4,000.00'
DS = 45 MPH

-L- PC Sta. 11+42.51

-L- PT Sta. 14+43.12

JERRY D. & GLENDA N. COPELAND
DB 409 PG 331
PB 10 PG 94

PI Sta 20+54.84
Δ = 33° 10' 38.0" (RT)
D = 1° 09' 43.1"
L = 463.24'
T = 238.32'
R = 800.00'
DS = 45 MPH

-L- PC Sta. 18+16.53

END PROJECT
POC STA.20+60.00 -L-

-L- PT Sta. 22+79.77

-L- POT Sta. 25+00.00

PREFORMED SCOUR HOLE
*NOT TO SCALE

PLAN VIEW

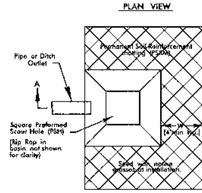

B= 4'
D= 1'
W= 4'

SECTION A-A

308

STA. 16+24 - LT.

RIGHT OF WAY AREA DATA

PARCEL NO.	PROPERTY OWNER	TOTAL ACRE.	AREA TAKEN	AREA REMAINING	CONSTR. EASEMENT
1	JOHN E. TIMMONS	-	0	-	2023 SF (.046 AC.)
2	FRANCES G MANESS FRED J. MANESS	-	0	-	1590 SF (.037 AC.)
3	JERRY O. COPELAND GLENDA N. COPELAND	-	0	-	1394 SF (.032 AC.)

DRAINAGE SUMMARY

STRUCTURE NUMBER	TYPE	GRATE TYPE	STA.	TOP ELEV.	INVERT IN	INVERT IN	INVERT OUT
1	TBDI STD. 840.36	STD. 840.37	18+58 - RT	419.65	-	-	416.70
1A	PIPE OUTFALL	-	18+58 - RT	-	414.54	-	-
2	2GI-B STD. 840.18	STD. 840.22	15+25 - LT	431.32	-	-	428.00
2A	PIPE OUTFALL	-	16+24 - LT	-	423.00	-	-
3	2GI-B STD. 840.18	STD. 840.22	15+25 - RT	431.05	-	-	428.30
4	TBDI STD. 840.36	STD. 840.37	15+90 - RT	429.39	-	-	426.64
*5	2GI-B STD. 840.18	STD. 840.22	15+90 - RT	426.80	422.90	422.90	422.90
5A	PIPE OUTFALL	-	16+30 - RT	-	417.00	-	-

* PIPE CROWNS NOT MATCHING

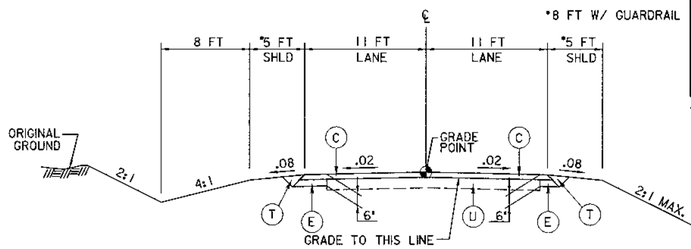

ROADWAY TYPICAL SECTION
SEE CROSS SECTIONS

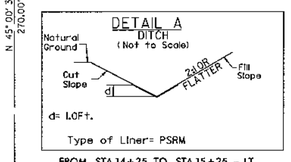

FROM STA.14+25 TO STA.15+25 - LT

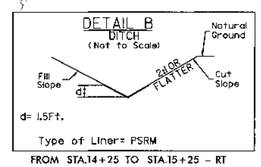

FROM STA.14+25 TO STA.15+25 - RT

PAVEMENT SCHEDULE

C	2" SURFACE COURSE, TYPE SF9.5A
E	4" BASE COURSE, TYPE B25.0B
T	EARTH MATERIAL.
U	EXISTING PAVEMENT.

DATUM DESCRIPTION

THE LOCALIZED COORDINATE SYSTEM DEVELOPED FOR THIS PROJECT IS BASED ON THE STATE PLANE COORDINATES ESTABLISHED BY NCDOT FOR MONUMENT "B4404-2" WITH NAD 83 STATE PLANE GRID COORDINATES OF NORTHING: 775530.962(ft) EASTING: 1918903.830(ft) THE AVERAGE COMBINED GRID FACTOR USED ON THIS PROJECT (GROUND TO GRID) IS: 0.99991358894 THE N.C. LAMBERT GRID BEARING AND LOCALIZED HORIZONTAL GROUND DISTANCE FROM "B4404-2" TO -L- STATION IS

ALL LINEAR DIMENSIONS ARE LOCALIZED HORIZONTAL DISTANCES VERTICAL DATUM USED IS NAVD 88

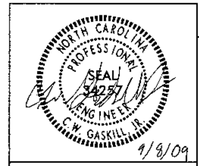

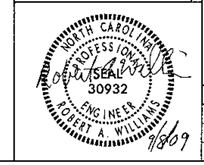

Stantec Consulting Services Inc.
Suite 300, 801 Jones Franklin Road
Raleigh, NC
27606
Tel. 919.851.6866
Fax. 919.851.7024
www.stantec.com

DRAWN BY : R. A. WILLIAMS DATE : 09-08-09
CHECKED BY : R. A. WILLIAMS DATE : 09-08-09

50' 25' 0' 50' 100'

PROJECT NO. 33684.3.1
ALAMANCE COUNTY
STATION: 17+00.00 -L-

STATE OF NORTH CAROLINA
DEPARTMENT OF TRANSPORTATION
RALEIGH

BRIDGE NO. 102 ON SR 2181 OVER SOUTH FORK CANE CREEK

REVISIONS						SHEET NO.
NO.	BY:	DATE:	NO.	BY:	DATE:	4
1			3			TOTAL SHEETS
2			4			19

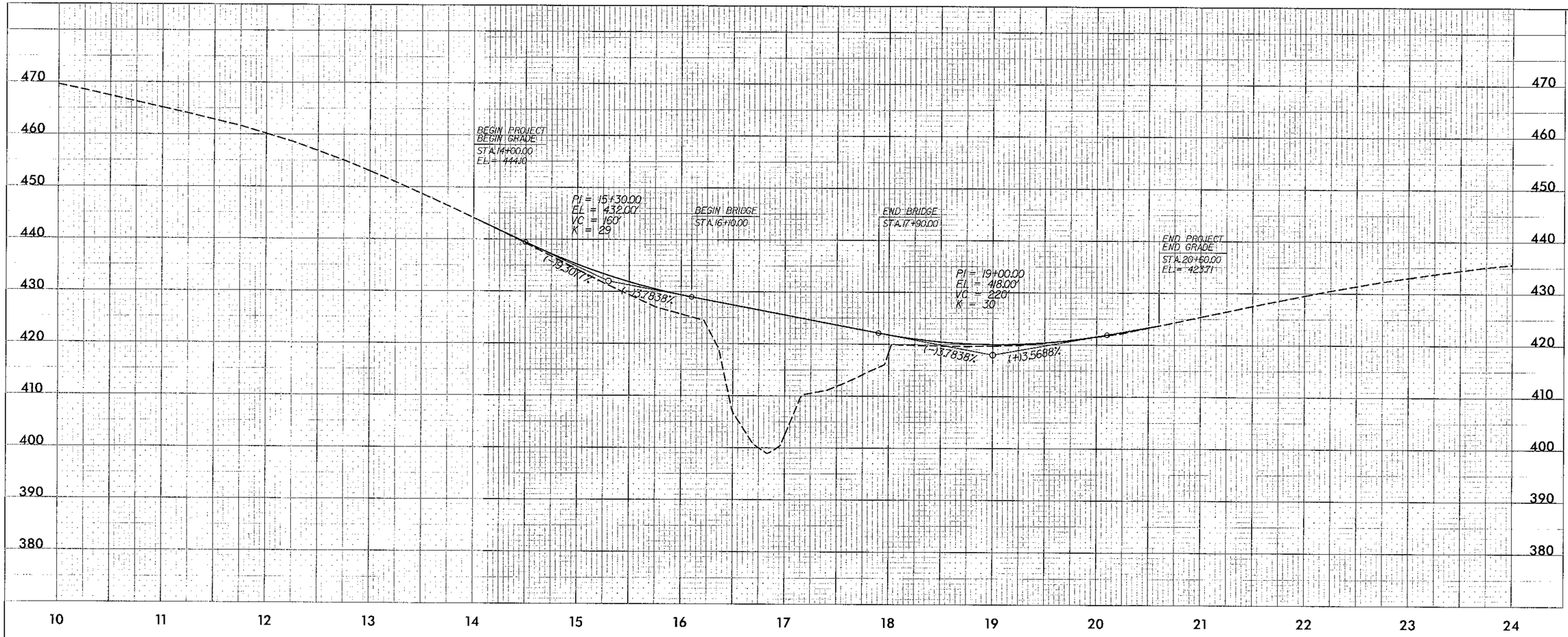

PROJECT NO. 33684.3.1

ALAMANCE COUNTY

STATION: 17+00.00 -L-

STATE OF NORTH CAROLINA
DEPARTMENT OF TRANSPORTATION
RALEIGH

BRIDGE NO. 102 ON SR 2181 OVER SOUTH FORK CANE CREEK

Stantec Consulting Services Inc.
Suite 300, 801 Jones Franklin Road
Raleigh, NC
27606
Tel. 919.851.6866
Fax. 919.851.7024
www.stantec.com

DRAWN BY : R.A. WILLIAMS DATE : 09-08-09
CHECKED BY : R.A. WILLIAMS DATE : 09-08-09

SCALES:
HORIZ.: 1" = 50'
VERT.: 1" = 10'

NORTH CAROLINA PROFESSIONAL SEAL 30932 ENGINEER ROBERT A. WILLIAMS
9/8/09

REVISIONS						SHEET NO.
NO.	BY:	DATE:	NO.	BY:	DATE:	5
1			3			TOTAL SHEETS
2			4			19

NOTES:

ASSUMED LIVE LOAD = HS 20 OR ALTERNATE LOADING WITH THE EXCEPTION OF THE BOX BEAM UNITS WHICH HAVE BEEN DESIGNED FOR HS 25 LIVE LOADING.

FOR OTHER DESIGN DATA AND GENERAL NOTES, SEE SHEET SN.

FOR EROSION CONTROL MEASURES SEE EROSION CONTROL PLANS.

THIS BRIDGE HAS BEEN DESIGNED IN ACCORDANCE WITH THE STRENGTH DESIGN METHOD AS SPECIFIED IN AASHTO BRIDGE DESIGN SPECIFICATIONS.

THE LOCATION OF THE CONSTRUCTION JOINT IN THE DRILLED PIERS IS BASED ON AN APPROXIMATE GROUND LINE ELEVATION. IF THE CONSTRUCTION JOINT IS ABOVE THE ACTUAL GROUND ELEVATION, THE CONTRACTOR SHALL PLACE THE CONSTRUCTION JOINT 1 FT. BELOW THE GROUND LINE.

REMOVAL OF THE EXISTING BRIDGE SHALL BE PERFORMED SO AS NOT TO ALLOW DEBRIS TO FALL INTO THE WATER. THE CONTRACTOR SHALL REMOVE THE BRIDGE AND SUBMIT PLANS FOR DEMOLITION IN ACCORDANCE WITH ARTICLE 402-2 OF THE STANDARD SPECIFICATIONS.

THE MATERIAL SHOWN IN THE HATCHED AREA SHALL BE EXCAVATED FOR A DISTANCE OF 20 FT. EACH SIDE OF CENTERLINE ROADWAY AS DIRECTED BY THE ENGINEER. THIS WORK WILL BE PAID FOR AT THE CONTRACT LUMP SUM PRICE FOR UNCLASSIFIED STRUCTURE EXCAVATION. SEE SECTION 412 OF THE STANDARD SPECIFICATIONS.

THE SUBSTRUCTURE OF THE EXISTING BRIDGE INDICATED ON THE PLANS IS FROM THE BEST INFORMATION AVAILABLE. SINCE THIS INFORMATION IS SHOWN FOR THE CONVENIENCE OF THE CONTRACTOR, THE CONTRACTOR SHALL HAVE NO CLAIM WHATSOEVER AGAINST THE DEPARTMENT OF TRANSPORTATION FOR ANY DELAYS OR ADDITIONAL COST INCURRED BASED ON DIFFERENCES BETWEEN THE EXISTING BRIDGE SUBSTRUCTURE SHOWN ON THE PLANS AND THE ACTUAL CONDITIONS AT THE PROJECT SITE.

ASPHALT WEARING SURFACE IS INCLUDED IN ROADWAY QUANTITY ON ROADWAY PLANS.

DRAINAGE DATA:

DESIGN DISCHARGE 7,100 CFS.
FREQUENCY OF DESIGN FLOOD 25 YEARS.
DESIGN HIGH WATER ELEVATION 419.34.
DRAINAGE AREA 66.7 SQ. MI.
BASIC DISCHARGE(Q100) 12,800 CFS.
BASIC HIGH WATER ELEVATION 425.22.
OVERTOPPING FLOOD DATA
OVERTOPPING DISCHARGE 8,150 CFS.
FREQUENCY OF OVERTOPPING FLOOD 25+ YRS.
OVERTOPPING FLOOD ELEVATION 420.70

THIS STRUCTURE HAS BEEN DESIGNED IN ACCORDANCE WITH HEC 18, "EVALUATING SCOUR AT BRIDGES", MAY, 2001.

THIS BRIDGE HAS BEEN DESIGNED IN ACCORDANCE WITH THE REQUIREMENTS OF THE AASHTO STANDARD SPECIFICATIONS FOR SEISMIC DESIGN OF HIGHWAY BRIDGES FOR SEISMIC PERFORMANCE CATEGORY A.

INASMUCH AS THE PAINT SYSTEM ON THE EXISTING STRUCTURAL STEEL CONTAINS LEAD, THE CONTRACTOR'S ATTENTION IS DIRECTED TO ARTICLE 107-1 OF THE STANDARD SPECIFICATIONS. ANY COSTS RESULTING FROM COMPLIANCE WITH APPLICABLE STATE OR FEDERAL REGULATIONS PERTAINING TO HANDLING OF MATERIALS CONTAINING LEAD BASED PAINT SHALL BE INCLUDED IN THE BID PRICE FOR "REMOVAL OF EXISTING STRUCTURE AT STATION 17+00.00."

NO KNOWN UTILITY CONFLICTS.

FOR CRANE SAFETY, SEE SPECIAL PROVISIONS.

FOR CONSTRUCTION OF SUPERSTRUCTURE, SEE SPECIAL PROVISIONS.

FOR CONSTRUCTION OF SUBSTRUCTURE, SEE SPECIAL PROVISIONS.

FOR PRESTRESSED CONCRETE MEMBERS, SEE SPECIAL PROVISIONS.

PLAIN RIP RAP CLASS II (2'-0" THICK)
END BENT 1 = 39 TONS
END BENT 2 = 46 TONS

FOR DRILLED PIERS, SEE DRILLED PIER SPECIAL PROVISION.

DRILLED PIERS AT BENT NO. 1 ARE DESIGNED FOR BOTH SKIN FRICTION AND END BEARING. CHECK FIELD CONDITIONS FOR THE REQUIRED END BEARING CAPACITY OF 75 TSF.

DRILLED PIERS AT BENT NO. 1 ARE DESIGN FOR AN APPLIED LOAD OF 320 TONS EACH AT THE TOP OF THE COLUMN.

INSTALL DRILLED PIER #1 (LEFT) AT BENT NO. 1 THAT EXTEND TO AN ELEVATION NO HIGHER THAN 387 FT., AND SATISFY THE REQUIRED END BEARING CAPACITY.

INSTALL DRILLED PIER #2 (RIGHT) AT BENT NO. 1 THAT EXTEND TO AN ELEVATION NO HIGHER THAN 389 FT., SATISFY THE REQUIRED BEARING CAPACITY AND HAVE MINIMUM PENETRATION OF 6 FT. INTO ROCK AS DEFINED BY THE DRILLED PIERS SPECIAL PROVISION.

THE SCOUR CRITICAL ELEVATION FOR BENT NO. 1 IS ELEVATION 395 FT. SCOUR CRITICAL ELEVATIONS ARE USED TO MONITOR POSSIBLE SCOUR PROBLEMS DURING THE LIFE OF THE STRUCTURE.

SPT TESTING IS NOT REQUIRED TO DETERMINE THE END BEARING CAPACITY OF THE DRILLED PIERS AT BENT NO. 1.

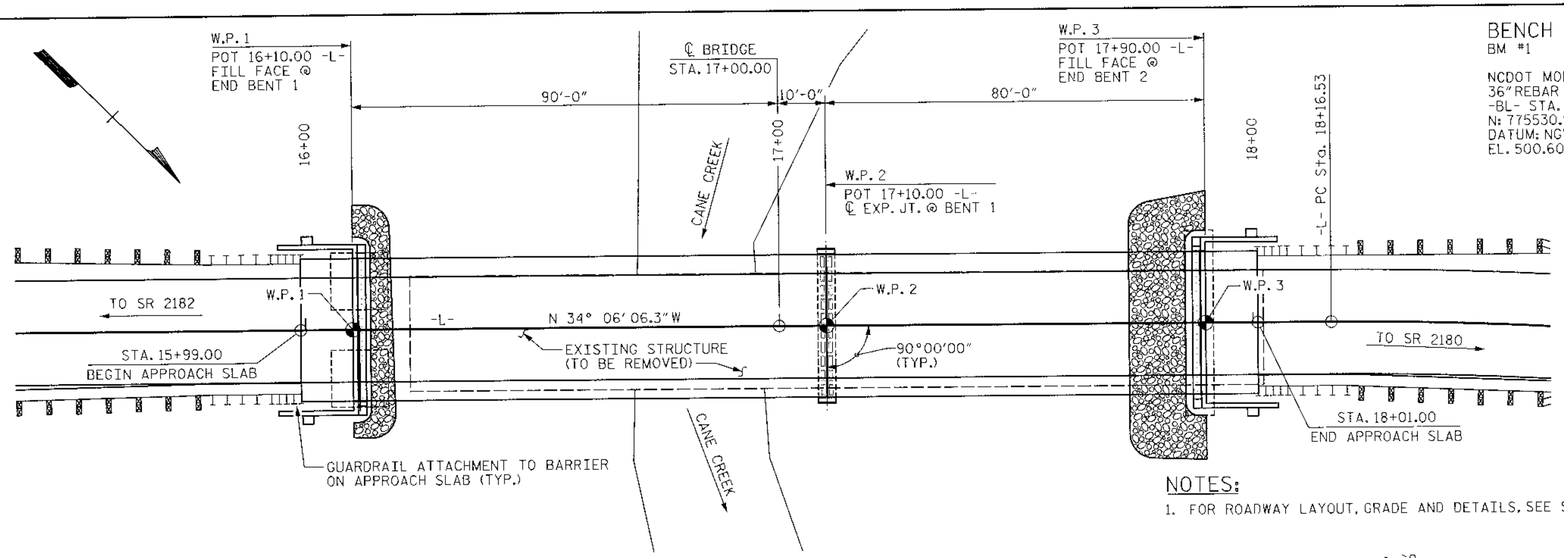

PLAN

BENCH MARK

BM #1

NCDOT MONUMENT B4404-2, 36" REBAR WITH CAP @ -BL- STA. 10+42.00
N: 775530.962', E: 1918903.830'
DATUM: NGVD 88
EL. 500.609

NOTES:

1. FOR ROADWAY LAYOUT, GRADE AND DETAILS, SEE SHEETS 17 AND 18.

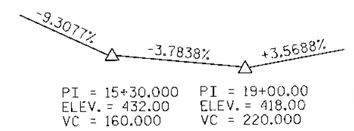

GRADE LINE PROFILE

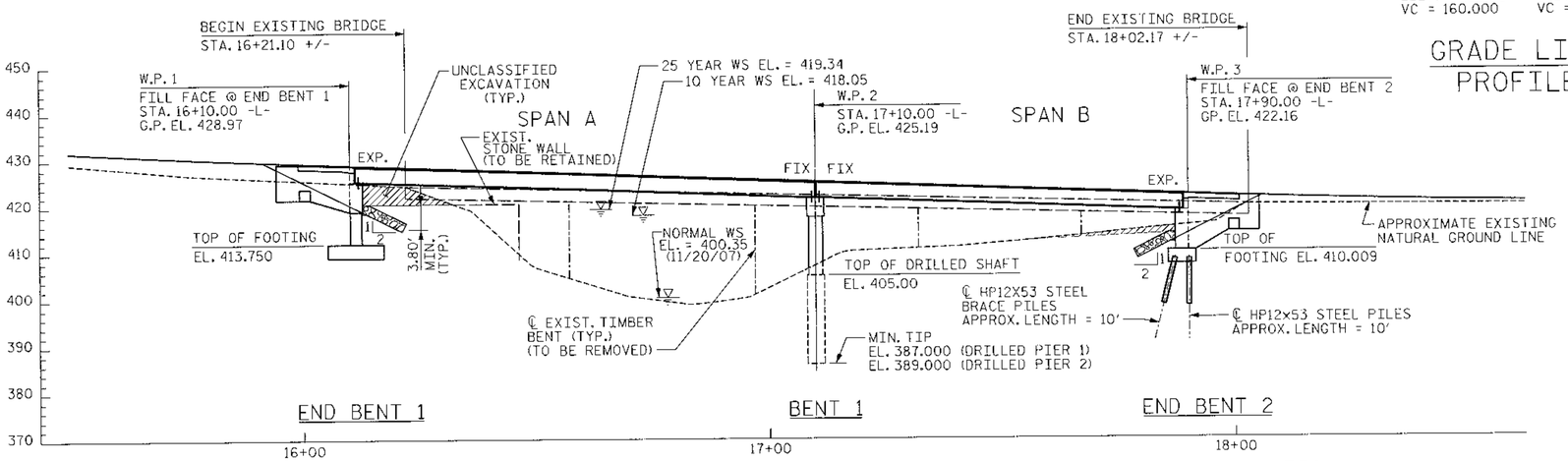

ELEVATION

DO NOT USE SLURRY CONSTRUCTION FOR DRILLED PIERS AT BENT NO. 1.

SID INSPECTIONS MAY BE REQUIRED FOR DRILLED PIERS. THE ENGINEER WILL DETERMINE THE NEED FOR SID INSPECTIONS.

INTEGRITY TESTING MAY BE REQUIRED FOR DRILLED PIERS. IF REQUIRED AND AFTER DRILLED PIER CONCRETE ACHIEVES 3000 PSI COMPRESSIVE STRENGTH, PROVIDE ACCESS TO AND PREPARE TOP OF PIERS AS DIRECTED BY THE ENGINEER. THE ENGINEER WILL DETERMINE THE NEED FOR AND PERFORM INTEGRITY TESTING. DO NOT CONSTRUCT COLUMNS FOR FOOTINGS ON TOP OF PIERS THAT ARE TESTED UNTIL TEST RESULTS ARE ACCEPTABLE. PAYMENT FOR COSTS ASSOCIATED WITH INTEGRITY TESTING WILL BE CONSIDERED INCIDENTAL TO THE UNIT PRICE OF THE DRILLED PIERS.

DRIVE PILES AT END BENT NO. 2 TO A REQUIRED BEARING CAPACITY OF 100 TONS PER PILE. THE REQUIRED BEARING CAPACITY IS EQUAL TO THE ALLOWABLE BEARING CAPACITY WITH A MINIMUM FACTOR OF SAFETY OF TWO.

THE ALLOWABLE BEARING CAPACITY FOR PILES AT END BENT NO. 2 IS 50 TONS PER PILE.

THE REQUIRED BEARING CAPACITY FOR SPREAD FOOTINGS AT END BENT NO. 1 IS 12 TSF. CHECK FIELD CONDITIONS FOR THE REQUIRED BEARING CAPACITY JUST BEFORE PLACING CONCRETE.

THE ALLOWABLE BEARING CAPACITY FOR SPREAD FOOTINGS AT END BENT NO. 1 IS 4 TSF.

EXISTING BRIDGE INFORMATION

FOUR SPANS: 1 @ 35'-3½"
1 @ 40'-2"
1 @ 35'-2"
1 @ 35'-1½"
1 @ 35'-1"
CLEAR ROADWAY WIDTH = 24'-0"
STEEL PLANK DECK ON 10 LINES OF I-BEAMS.
EXTERIOR & INTERIOR BENT: TIMBER CAP ON TIMBER PILES, TIMBER BULKHEADS
ENTIRE STRUCTURE TO BE REMOVED

PROJECT NO. 33684.3.1

ALAMANCE COUNTY

STATION: 17+00.00 -L-

REPLACES BRIDGE NO. 102

STATE OF NORTH CAROLINA
DEPARTMENT OF TRANSPORTATION
RALEIGH

BRIDGE NO. 102 ON SR 2181 OVER SOUTH FORK CANE CREEK BETWEEN SR 2182 AND SR 2180

Stantec Consulting Services Inc.
Suite 300, 801 Jones Franklin Road
Raleigh, NC
27606
Tel. 919.851.6866
Fax. 919.851.7024
www.stantec.com

DRAWN BY : J. L. HENNEKES DATE : 09-08-09
CHECKED BY : J. T. KELVINGTON DATE : 09-08-09

SEAL 13406 ENGINEER JOSEPH T. KELVINGTON — 09

REVISIONS						SHEET NO.
NO.	BY:	DATE:	NO.	BY:	DATE:	S-1
1			3			TOTAL SHEETS
2			4			19

I:\NPD00712\transportation\design\structures\dr-ew\bg\B4404_1.GPE.cgn 9/8/2009 3:09:05 PM su5E#3

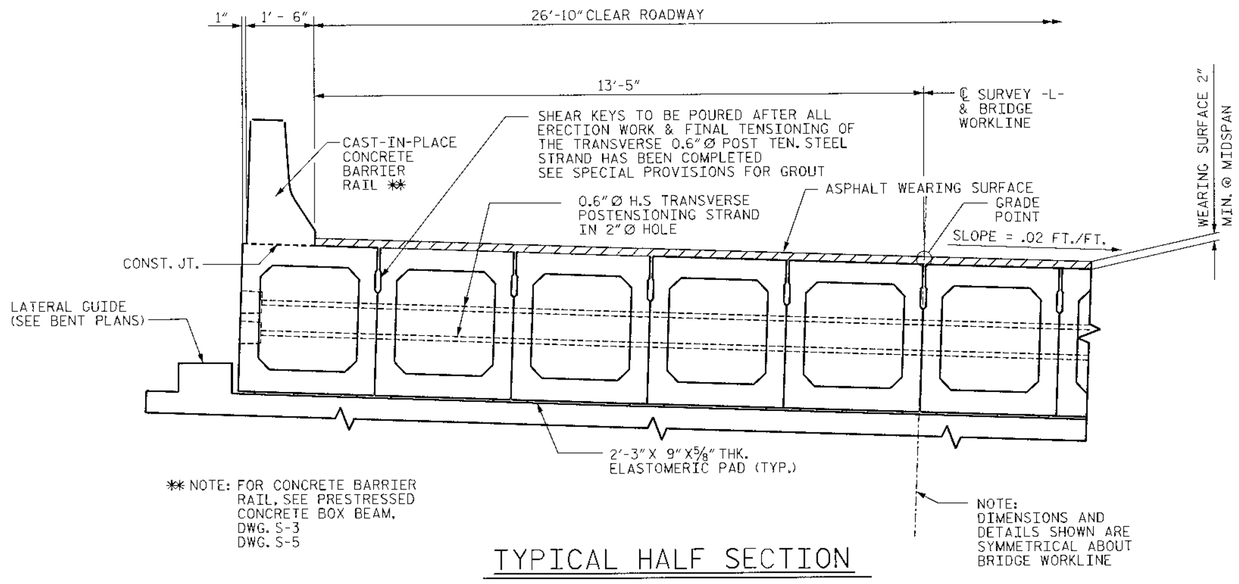

** NOTE: FOR CONCRETE BARRIER RAIL, SEE PRESTRESSED CONCRETE BOX BEAM, DWG. S-3 DWG. S-5

TYPICAL HALF SECTION

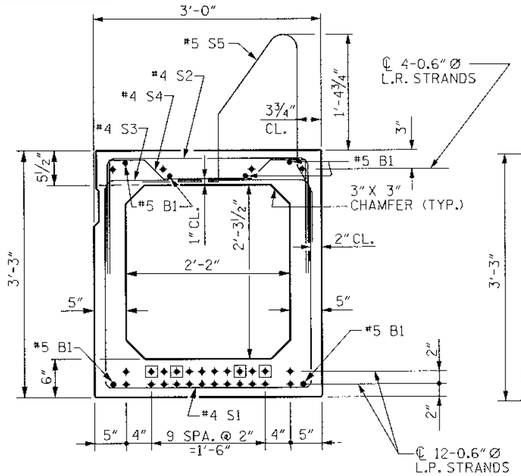

EXTERIOR BOX BEAM SECTION

28 TOTAL STRANDS REQUIRED
● DENOTES 0.6" H.S. STRANDS
DEBONDED 6'-0" FROM EA. END

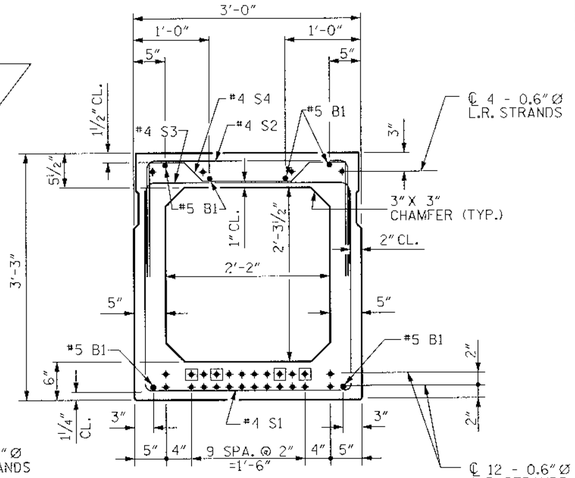

INTERIOR BOX BEAM SECTION

28 TOTAL STRANDS REQUIRED
● DENOTES 0.6" H.S. STRANDS
DEBONDED 6'-0" FROM EA. END

SPAN A BOX BEAM SECTIONS

(100 FOOT SPAN)

EXTERIOR BOX BEAM SECTION

20 TOTAL STRANDS REQUIRED
● DENOTES 0.6" H.S. STRANDS
DEBONDED 6'-0" FROM EA. END

INTERIOR BOX BEAM SECTION

20 TOTAL STRANDS REQUIRED
● DENOTES 0.6" H.S. STRANDS
DEBONDED 6'-0" FROM EA. END

SPAN B BOX BEAM SECTIONS

(80 FOOT SPAN)

SPAN A

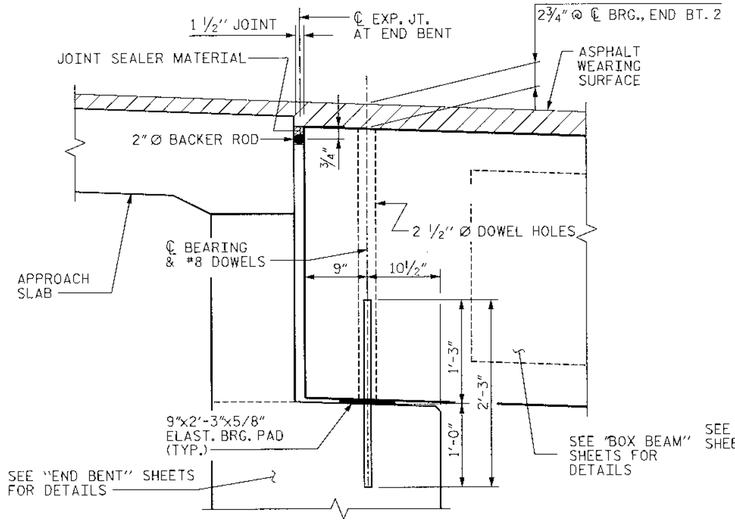

SECTION AT END BENTS

EXPANSION JOINT
(END BENT 1 SHOWN, END BENT 2 SIMILAR)

SPAN B

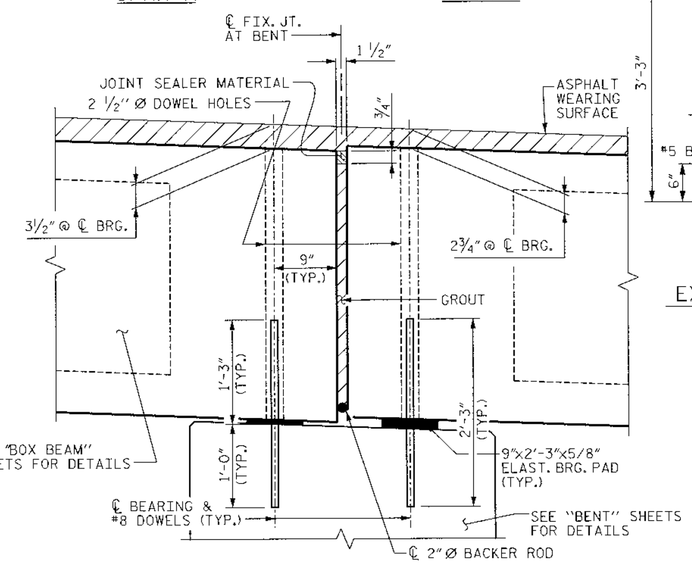

SECTION AT BENT 1

FIXED JOINT

FOR NOTES, SEE SHEET NO. S-7.

FOR ADDITIONAL BOX BEAM DETAILS, SEE SHEET NO.'S S-3 THRU S-7.

PROJECT NO. 33684.3.1

ALAMANCE COUNTY

STATION: 17+00.00 -L-

STATE OF NORTH CAROLINA
DEPARTMENT OF TRANSPORTATION
RALEIGH

PRESTRESSED CONCRETE BOX BEAM 100' SPAN AND 80' SPAN

SEAL 13406 ENGINEER JOSEPH T. KELVINGTON PROFESSIONAL ENGINEER NORTH CAROLINA

REVISIONS						SHEET NO.
NO.	BY:	DATE:	NO.	BY:	DATE:	S-2
1			3			TOTAL SHEETS
2			4			19

Stantec Consulting Services Inc.
Suite 300, 801 Jones Franklin Road
Raleigh, NC
27606
Tel. 919.851.6866
Fax. 919.851.7024
www.stantec.com
Stantec

DRAWN BY : J. L. HENNEKES DATE : 09-08-09
CHECKED BY : J. T. KELVINGTON DATE : 09-08-09

U:\NCDOT\2\trnsportation\design\structures\drawings\B4404_2_CSB_1-6.dgn 9/8/2009 3:09:06 PM BASER

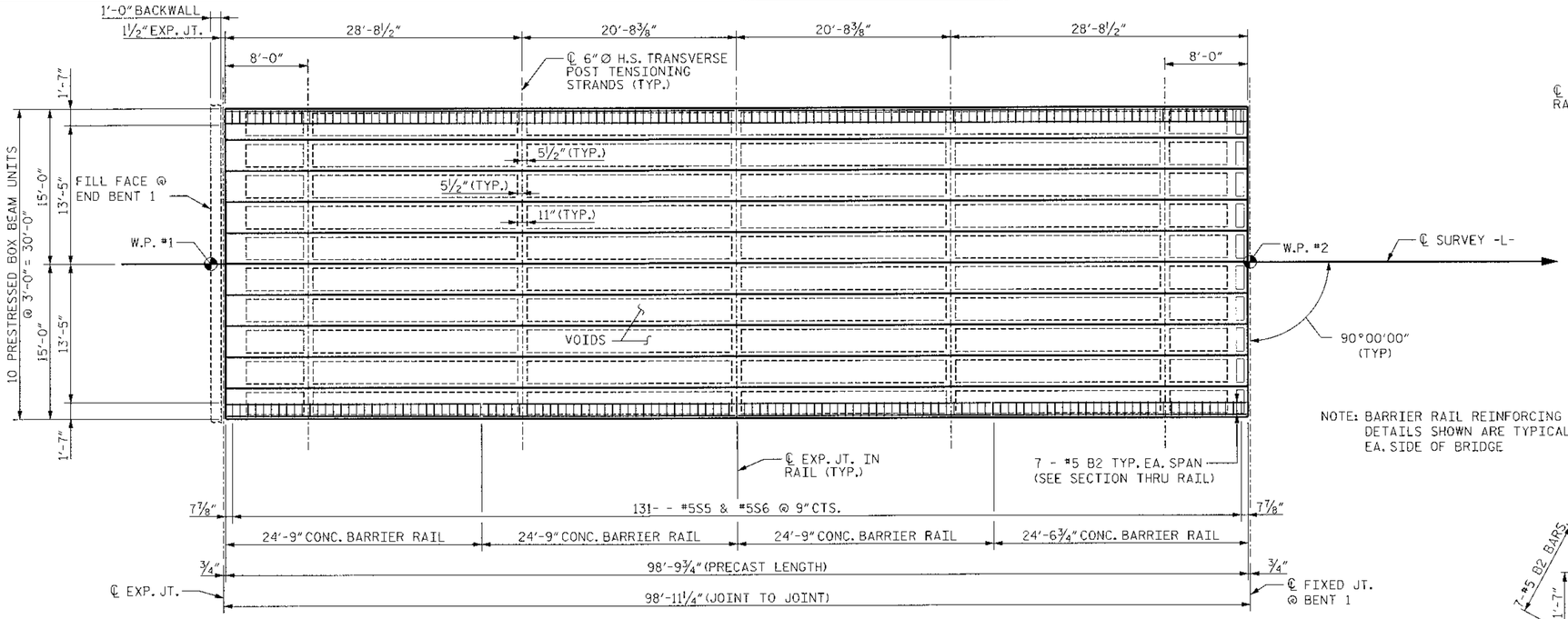

100'-0" SPAN - PLAN OF SPAN

NOTE: #5 S5 AND #4 "S" BARS IN EXTERIOR UNITS MAY BE REPOSITIONED AS REQUIRED TO CLEAR BLOCKOUTS FOR GROUTED RECESSES

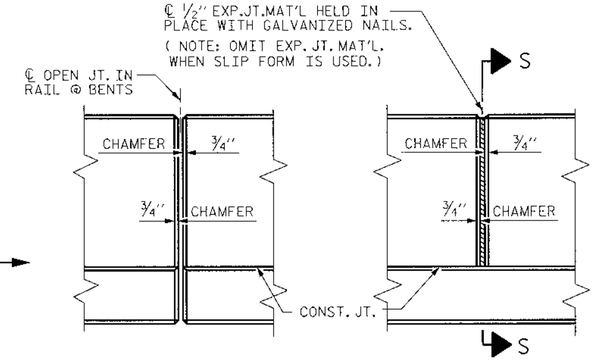

ELEVATION AT EXPANSION JOINTS

NOTE: BARRIER RAIL REINFORCING DETAILS SHOWN ARE TYPICAL EA. SIDE OF BRIDGE

BARRIER RAIL DETAILS

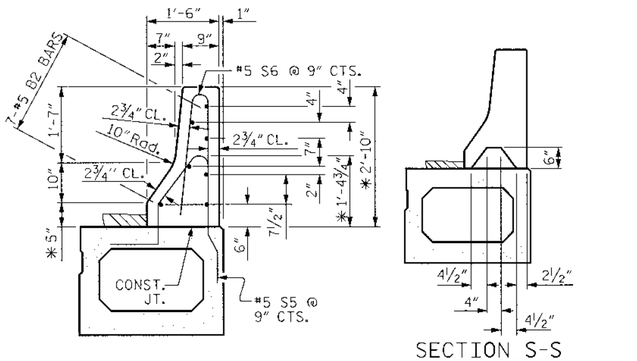

SECTION THRU RAIL

SECTION S-S
AT DAM IN OPEN JOINT
(THIS IS TO BE USED ONLY WHEN SLIP FORM IS USED)

BARRIER RAIL DETAILS

*BASED ON 2" MIN. WEARING SURFACE @ BARRIER FACE @ MID-SPAN

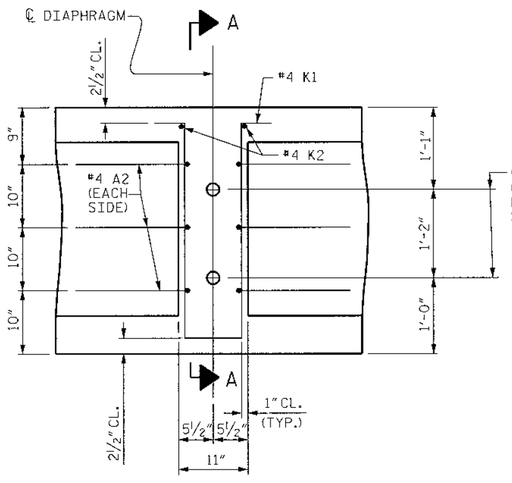

DIAPHRAGM DETAIL

#4 "S" BARS NOT SHOWN.
#4 "S" BARS MAY BE SHIFTED SLIGHTLY TO CLEAR 2" Ø HOLE.

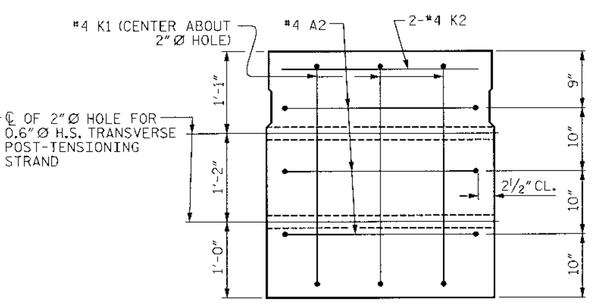

SECTION A-A
VOIDS NOT SHOWN

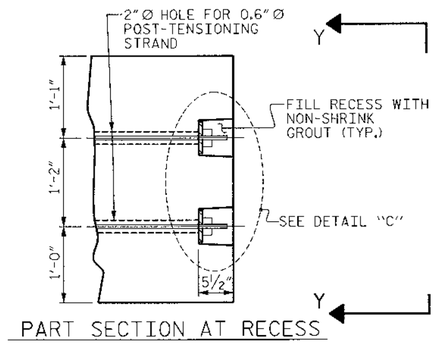

PART SECTION AT RECESS

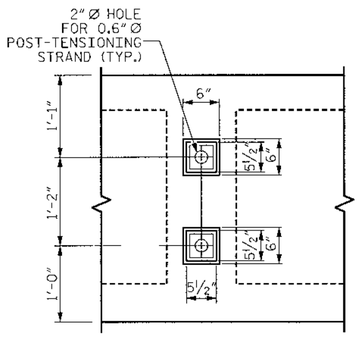

VIEW Y-Y
SHOWING ELEVATION VIEW OF GROUTED RECESS

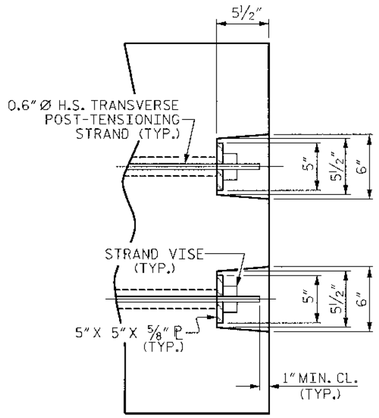

DETAIL "C"

PROJECT NO. 33684.1.1
ALAMANCE COUNTY
STATION: 17+00.00 -L-

STATE OF NORTH CAROLINA
DEPARTMENT OF TRANSPORTATION
RALEIGH

PRESTRESSED CONCRETE BOX BEAM 100' SPAN

REVISIONS						SHEET NO.
NO.	BY:	DATE:	NO.	BY:	DATE:	S-3
1			3			TOTAL SHEETS
2			4			19

Stantec
Stantec Consulting Services Inc.
Suite 300, 801 Jones Franklin Road
Raleigh, NC
27606
Tel. 919.851.6866
Fax. 919.851.7024
www.stantec.com

DRAWN BY : J. L. HENNEKES DATE : 08-27-08
CHECKED BY : J. T. KELVINGTON DATE : 08-27-08

SEAL 13406 ENGINEER JOSEPH KELVINGTON NORTH CAROLINA

u:\NC00121\transportation\design\structures\drawings\84304_3_C3B_2-6.dgn 7/4/2009 10:25:54 AM $USER$

FOR BOX BEAM BILL OF MATERIAL, SEE DETAILS ON SHEET NO. S-7.

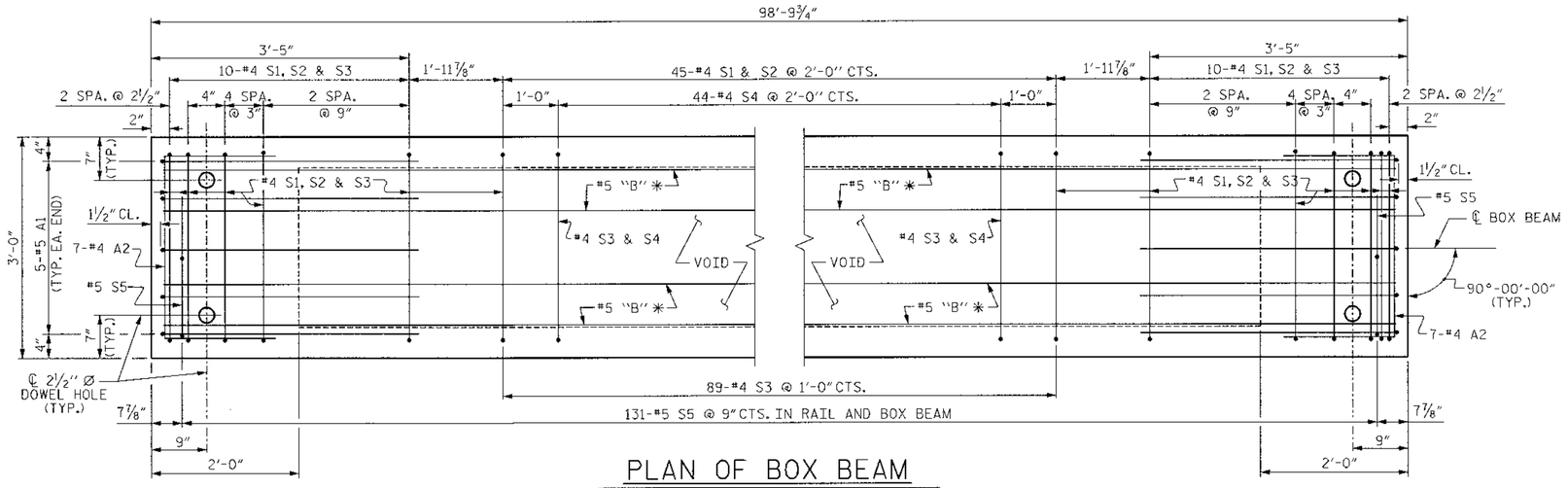

PLAN OF BOX BEAM

EXTERIOR BEAM SHOWN. INTERIOR TYPICAL EXCEPT FOR #5 S5 BAR (SEE DETAILS ON SHEET NO. S-3).

✱ #5 B1 (2 BAR RUN) W/ 1'-8" MIN. LAP SPLICE (50'-11" LG.)

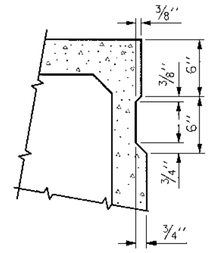

SHEAR KEY DETAIL

NOTE: OMIT SHEAR KEY ON OUTSIDE FACE OF EXTERIOR BOX BEAMS.

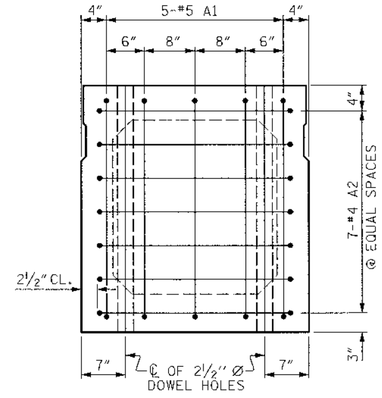

END ELEVATION

SHOWING PLACEMENT OF #5 & #4 "A" BARS AND LOCATION OF DOWEL HOLES. (INTERIOR BOX BEAM SECTION SHOWN-EXTERIOR SECTION SIMILAR EXCEPT SHEAR KEY LOCATION. STRAND LAYOUT NOT SHOWN.)

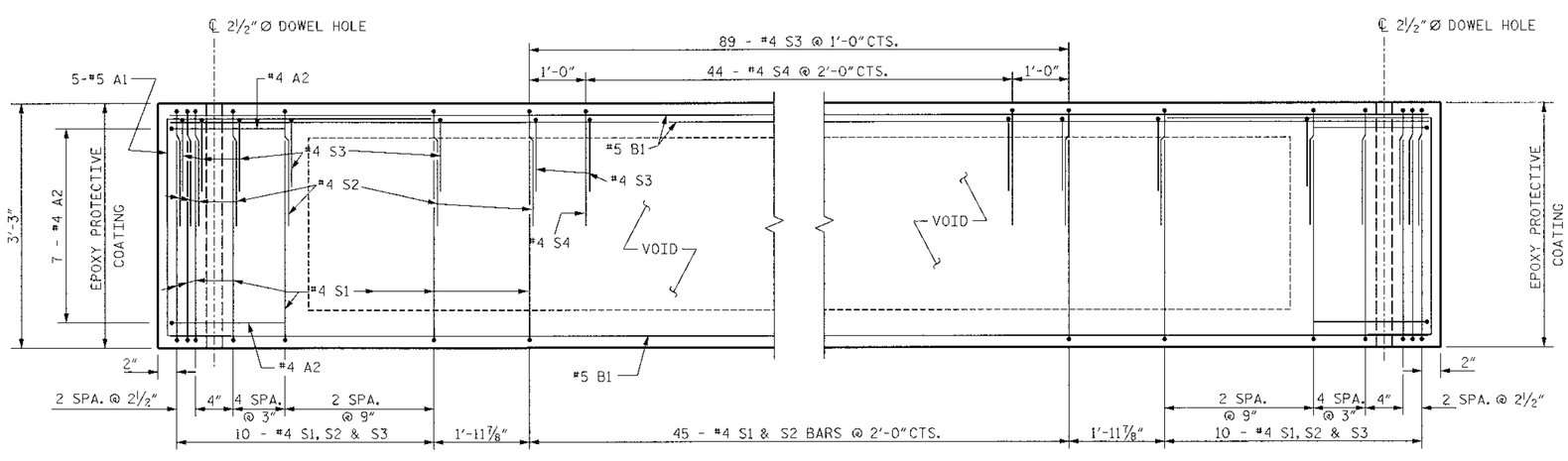

ELEVATION OF BOX BEAM

NOTE: REINFORCING STEEL SHOWN IS TYPICAL @ EA. END
#4 S1, S2, S3, AND S4 BARS MAY BE REPOSITIONED AS NECESSARY TO CLEAR DUCTS FOR TRANSVERSE POST- TENSIONING STRANDS.

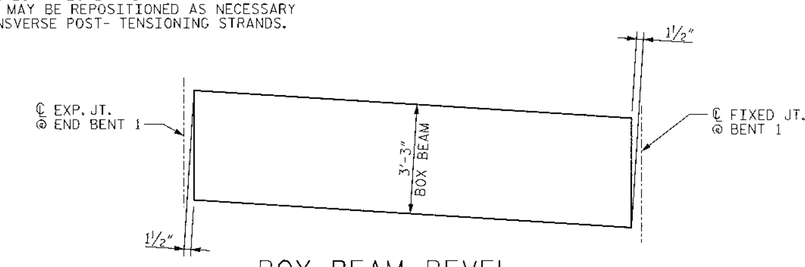

BOX BEAM BEVEL

(END DETAIL)

PROJECT NO. 33684.1.1

ALAMANCE COUNTY

STATION: 17+00.00 -L-

STATE OF NORTH CAROLINA
DEPARTMENT OF TRANSPORTATION
RALEIGH

PRESTRESSED CONCRETE BOX BEAM 100' SPAN

SEAL 13406 ENGINEER JOSEPH T. KELVINGTON

REVISIONS						SHEET NO.
NO.	BY:	DATE:	NO.	BY:	DATE:	S-4
1			3			TOTAL SHEETS
2			4			19

Stantec
Stantec Consulting Services Inc.
Suite 300, 801 Jones Franklin Road
Raleigh, NC
27606
Tel. 919.851.6866
Fax. 919.851.7024
www.stantec.com

DRAWN BY : J. L. HENNEKES DATE : 08-27-08
CHECKED BY : J. T. KELVINGTON DATE : 08-27-08

u:\7000042\transportation\design\structures\drawing\B4404_4_CBB_3-6.dgn 7/14/2009 10:51:56 AM $USER$

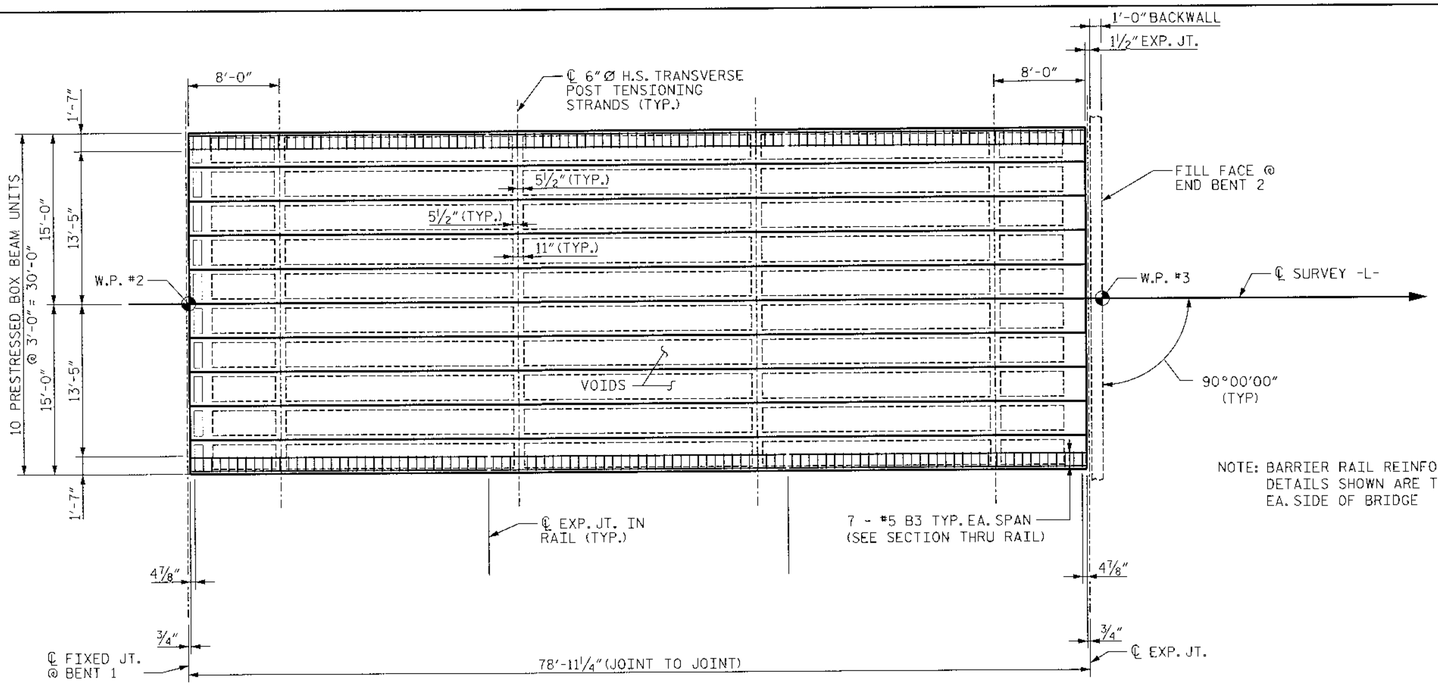

80'-0" SPAN - PLAN OF SPAN

NOTE: #5 S5 AND #4 "S" BARS IN EXTERIOR UNITS MAY BE REPOSITIONED AS REQUIRED TO CLEAR BLOCKOUTS FOR GROUTED RECESSES

NOTE: BARRIER RAIL REINFORCING DETAILS SHOWN ARE TYPICAL EA. SIDE OF BRIDGE

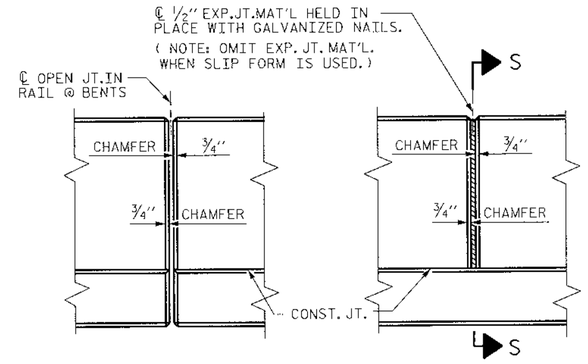

ELEVATION AT EXPANSION JOINTS

BARRIER RAIL DETAILS

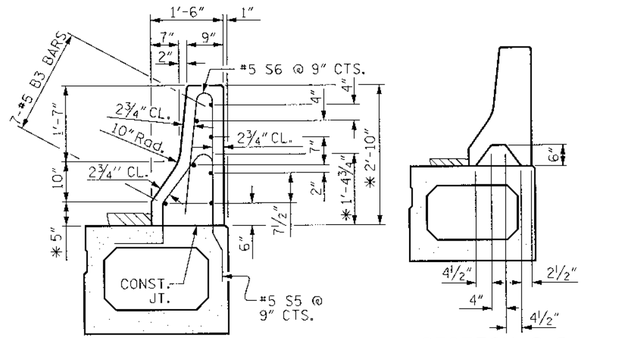

SECTION THRU RAIL

SECTION S-S

AT DAM IN OPEN JOINT (THIS IS TO BE USED ONLY WHEN SLIP FORM IS USED)

BARRIER RAIL DETAILS

*BASED ON 2" MIN. WEARING SURFACE @ BARRIER FACE @ MID-SPAN

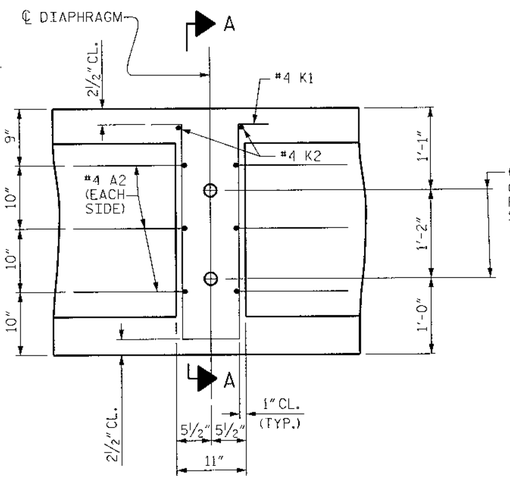

DIAPHRAGM DETAIL

#4 "S" BARS NOT SHOWN.
#4 "S" BARS MAY BE SHIFTED SLIGHTLY TO CLEAR 2" Ø HOLE.

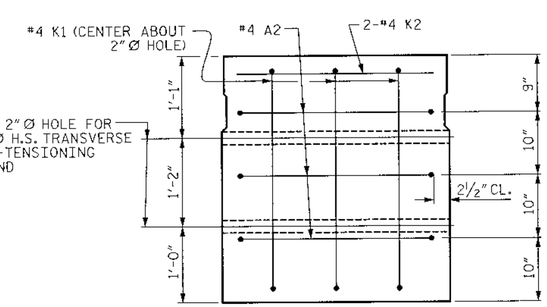

SECTION A-A

VOIDS NOT SHOWN

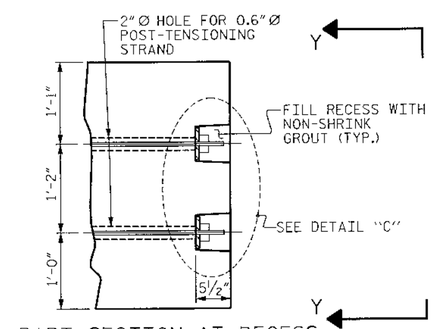

PART SECTION AT RECESS

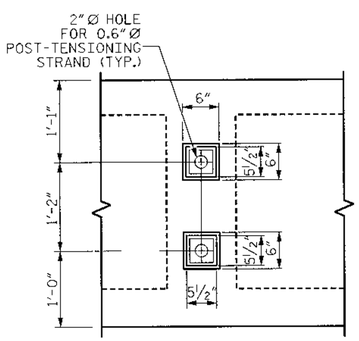

VIEW Y-Y

SHOWING ELEVATION VIEW OF GROUTED RECESS

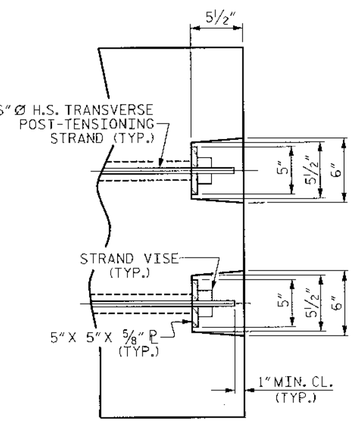

DETAIL "C"

PROJECT NO. 33684.1.1

ALAMANCE COUNTY

STATION: 17+00.00 -L-

STATE OF NORTH CAROLINA
DEPARTMENT OF TRANSPORTATION
RALEIGH

PRESTRESSED CONCRETE BOX BEAM 80' SPAN

REVISIONS						SHEET NO.
NO.	BY:	DATE:	NO.	BY:	DATE:	S-5
1			3			TOTAL SHEETS
2			4			19

Stantec Consulting Services Inc.
Suite 300, 801 Jones Franklin Road
Raleigh, NC
27606
Tel. 919.851.6866
Fax. 919.851.7024
www.stantec.com

DRAWN BY : J. L. HENNEKES DATE : 08-27-08
CHECKED BY : J. T. KELVINGTON DATE : 08-27-08

SEAL 13406 — NORTH CAROLINA PROFESSIONAL ENGINEER — JOSEPH T. KELVINGTON — 8/27/09

u:\1760072\transportation\design\structures\drawing\84404.5.082.4-6.dgn 1/4/2009 10:57:57 AM susers

FOR BOX BEAM BILL OF MATERIAL, SEE DETAILS ON SHEET NO. S-7.

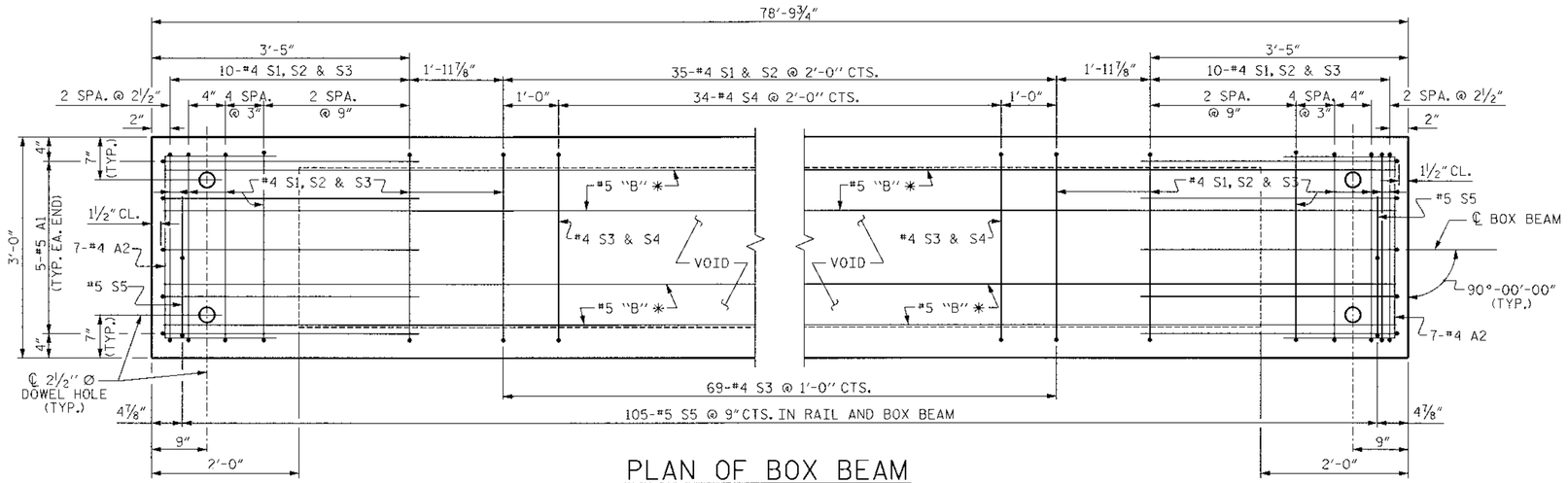

PLAN OF BOX BEAM

EXTERIOR BEAM SHOWN. INTERIOR TYPICAL EXCEPT FOR #5 S5 BAR (SEE DETAILS ON SHEET NO. S-5).

* #5 B1 (2 BAR RUN) W/ 1'-8" MIN. LAP SPLICE (40'-1" LG.)

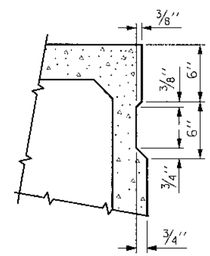

SHEAR KEY DETAIL

NOTE: OMIT SHEAR KEY ON OUTSIDE FACE OF EXTERIOR BOX BEAMS.

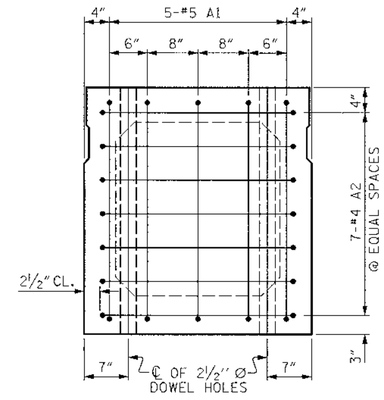

END ELEVATION

SHOWING PLACEMENT OF #5 & #4 "A" BARS AND LOCATION OF DOWEL HOLES. (INTERIOR BOX BEAM SECTION SHOWN-EXTERIOR SECTION SIMILAR EXCEPT SHEAR KEY LOCATION. STRAND LAYOUT NOT SHOWN.)

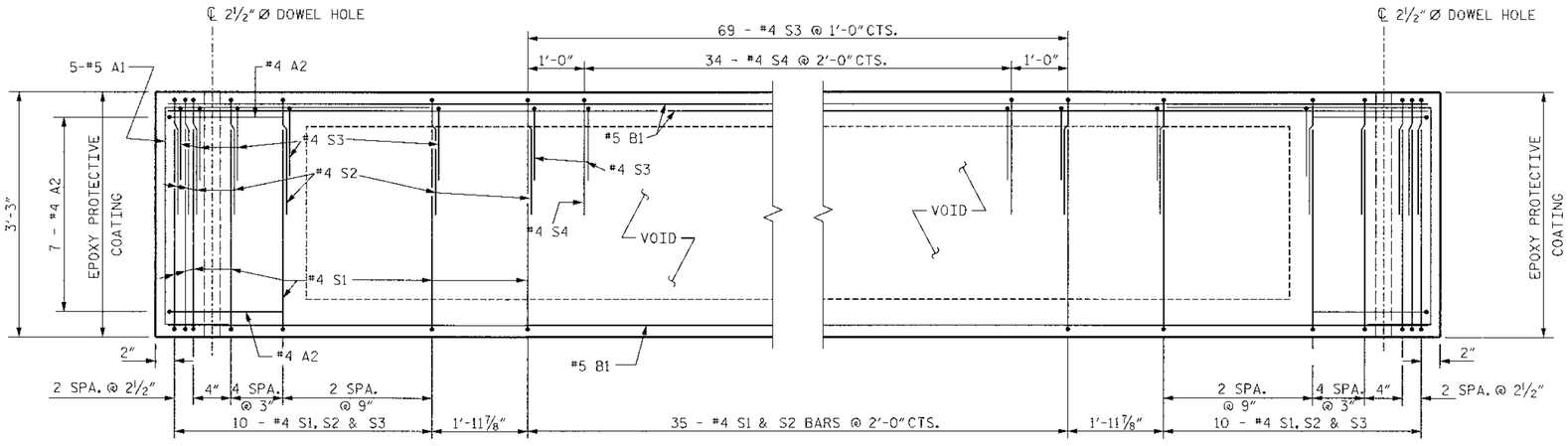

ELEVATION OF BOX BEAM

NOTE: REINFORCING STEEL SHOWN IS TYPICAL @ EA. END
#4 S1, S2, S3, AND S4 BARS MAY BE REPOSITIONED AS NECESSARY TO CLEAR DUCTS FOR TRANSVERSE POST- TENSIONING STRANDS.

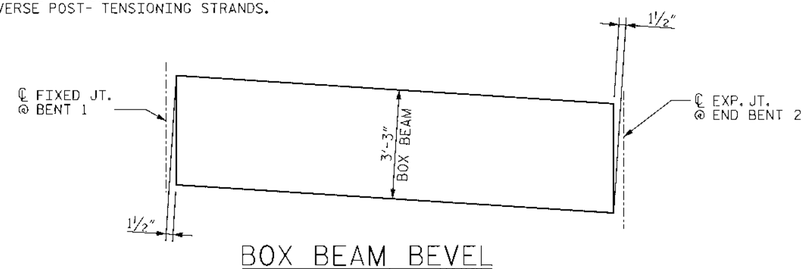

BOX BEAM BEVEL

(END DETAIL)

PROJECT NO. 33684.1.1

ALAMANCE COUNTY

STATION: 17+00.00 -L-

STATE OF NORTH CAROLINA
DEPARTMENT OF TRANSPORTATION
RALEIGH

PRESTRESSED CONCRETE BOX BEAM 80' SPAN

SEAL 13406 ENGINEER JOSEPH T. KELVINGTON

REVISIONS						SHEET NO.
NO.	BY:	DATE:	NO.	BY:	DATE:	S-6
1			3			TOTAL SHEETS
2			4			19

Stantec
Stantec Consulting Services Inc.
Suite 300, 801 Jones Franklin Road
Raleigh, NC
27606
Tel. 919.851.6866
Fax. 919.851.7024
www.stantec.com

DRAWN BY : J. L. HENNEKES DATE : 08-27-08
CHECKED BY : J. T. KELVINGTON DATE : 08-27-08

u:\17100712\transportation\design\structures\drawing\B4404_6_CBB_5-6.dgn 7/14/2009 10:51:59 AM $USER$

BAR TYPES 100' SPAN

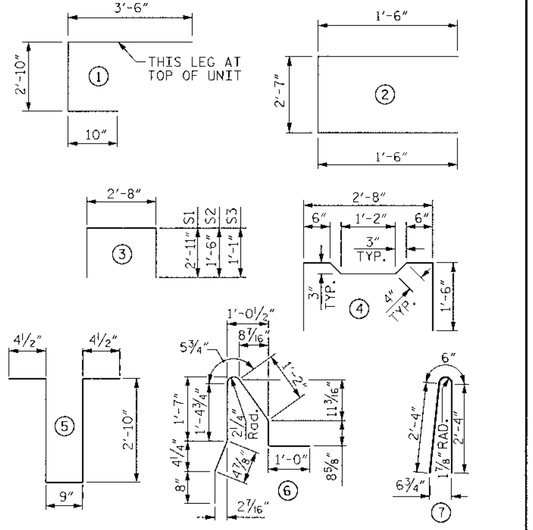

ALL BAR DIMENSIONS ARE OUT TO OUT

BILL OF MATERIAL FOR ONE BOX BEAM SECTION

				EXTERIOR UNIT		INTERIOR UNIT	
BAR	NUMBER	SIZE	TYPE	LENGTH	WEIGHT	LENGTH	WEIGHT
A1	10	#5	1	7'-2"	75	7'-2"	75
A2	44	#4	2	5'-7"	164	5'-7"	164
B1	12	#5	STR	50'-1"	627	50'-1"	627
K1	15	#4	5	7'-2"	72	7'-2"	72
K2	10	#4	STR	2'-7"	17	2'-7"	17
S1	65	#4	3	8'-6"	369	8'-6"	369
S2	65	#4	3	5'-8"	246	5'-8"	246
S3	109	#4	3	4'-10"	352	4'-10"	352
S4	44	#4	4	5'-10"	171	5'-10"	171
✱ S5	131	#5	6	5'-10"	797	--	--
REINFORCING STEEL					2093 LBS.	2093	LBS.
✱EPOXY COATED REINF. STEEL					797 LBS.	--	LBS.
7500 P.S.I. CONCRETE					19.3 CU. YDS.	19.1	CU. YDS.
0.6"Ø L.R. STRANDS					No. 28		

BAR TYPES 80' SPAN

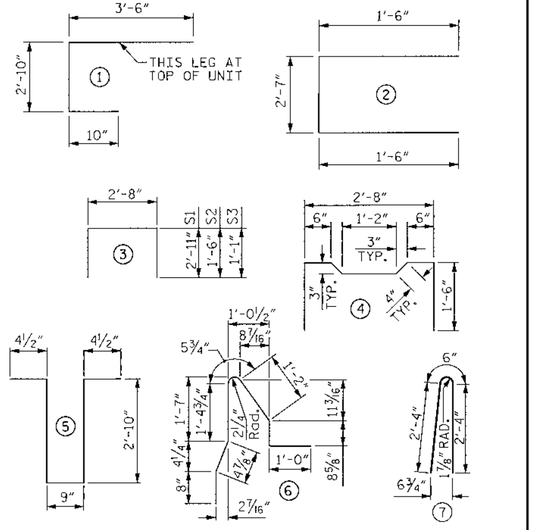

ALL BAR DIMENSIONS ARE OUT TO OUT

BILL OF MATERIAL FOR ONE BOX BEAM SECTION

				EXTERIOR UNIT		INTERIOR UNIT	
BAR	NUMBER	SIZE	TYPE	LENGTH	WEIGHT	LENGTH	WEIGHT
A1	10	#5	1	7'-2"	75	7'-2"	75
A2	38	#4	2	5'-7"	142	5'-7"	142
B1	12	#5	STR	40'-1"	502	40'-1"	502
K1	12	#4	5	7'-2"	57	7'-2"	57
K2	8	#4	STR	2'-7"	14	2'-7"	14
S1	55	#4	3	8'-6"	312	8'-6"	312
S2	55	#4	3	5'-8"	208	5'-8"	208
S3	89	#4	3	4'-10"	287	4'-10"	287
S4	34	#4	4	5'-10"	132	5'-10"	132
✱ S5	105	#5	6	5'-10"	639	--	--
REINFORCING STEEL					1729 LBS.	1729	LBS.
✱EPOXY COATED REINF. STEEL					639 LBS.	--	LBS.
7500 P.S.I. CONCRETE					15.6 CU. YDS.	15.4	CU. YDS.
0.6"Ø L.R. STRANDS					No. 20		

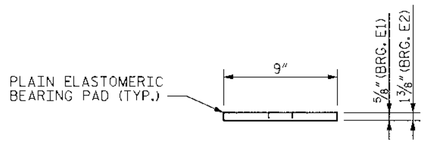

SECTION X-X

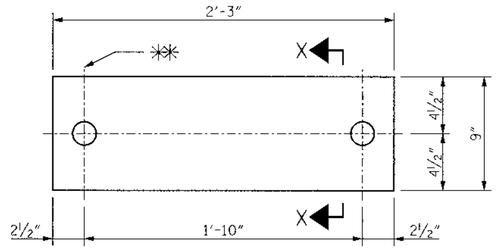

PLAN

✱✱ ℄ 1¼"Ø HOLE (TYP.), EA. FIXED BRG.
℄ 2½"Ø HOLE (TYP.), EA. EXP. BRG.

ELASTOMERIC BEARING DETAILS

NOTE: ALL ELASTOMER SHALL BE 60 DUROMETER HARDNESS

NOTES

ALL PRESTRESSING STRANDS SHALL BE 7-WIRE LOW RELAXATION GRADE 270 STRANDS AND SHALL CONFORM TO AASHTO M203 EXCEPT FOR SAMPLING REQUIREMENTS WHICH SHALL BE IN ACCORDANCE WITH THE STANDARD SPECIFICATIONS.

ALL REINFORCING STEEL CAST WITH THE BOX BEAM SECTION SHALL BE GRADE 60.

RECESSES FOR TRANSVERSE POST-TENSIONING STRANDS SHALL BE GROUTED AFTER THE TENSIONING OF THE STRANDS.

THE 2 ½"Ø DOWEL HOLES AT FIXED ENDS OF THE SLAB SECTIONS SHALL BE FILLED WITH NON-SHRINK GROUT. THE 2 ½"Ø DOWEL HOLES AT EXPANSION ENDS OF SLAB SECTIONS SHALL BE FILLED WITH JOINT SEALER MATERIAL TO 1 ½" ABOVE THE TOP OF DOWELS AND THEN FILLED WITH GROUT.

THE JOINT SEALER MATERIAL SHALL CONFORM TO THE REQUIREMENTS OF TYPE SL LOW MODULUS SILICONE SEALANT. THE 2"Ø BACKER ROD SHALL CONFORM TO THE REQUIREMENTS OF TYPE M BOND BREAKER. SEE SECTION 1028 OF THE STANDARD SPECIFICATIONS.

WHEN BOX BEAMS ARE CAST, A POSITIVE HOLD-DOWN SYSTEM SHALL BE EMPLOYED TO PREVENT VOIDS FROM RISING OR MOVING SIDEWAYS. THIS SYSTEM SHALL BE DESIGNED TO BE LEFT IN PLACE UNIL THE CONCRETE HAS REACHED RELEASE STRENGTH. AT LEAST THREE WEEKS PRIOR TO CASTING BOX BEAMS. THE CONTRACTOR SHALL SUBMIT THO THE ENGINEER FOR REVIEW AND COMMENT. DETAILED DRAWINGS OF THE PROPOSED HOLD-DOWN SYSTEM. IN ADDITION TO STRUCTURAL DETAILS, LOCATION AND SPACING OF THE HOLD-DOWNS SHALL BE INDICATED.

THE TRANSFER OF LOAD FROM THE ANCHORAGES TO THE 100' BOX BEAM UNIT SHALL BE DONE WHEN THE CONCRETE HAS REACHED A COMPRESSIVE STRENGTH OF NOT LESS THAN 5000 PSI.

THE TRANSFER OF LOAD FROM THE ANCHORAGES TO THE 80' BOX BEAM UNIT SHALL BE DONE WHEN THE CONCRETE HAS REACHED A COMPRESSIVE STRENGTH OF NOT LESS THAN 4000 PSI.

ALL REINFORCING STEEL IN BARRIER RAILS SHALL BE EPOXY COATED.

PRESTRESSING STRANDS SHALL BE CUT FLUSH WITH THE BOX BEAM UNIT ENDS.

APPLY EPOXY PROTECTIVE COATING TO BOX BEAM UNIT ENDS. FOR EPOXY PROTECTIVE COATING, SEE SPECIAL PROVISIONS.

VERTICAL GROOVED CONTRACTION JOINTS, ½" IN DEPTH, SHALL BE TOOLED IN ALL EXPOSED FACES OF THE BARRIER RAIL AND IN ACCORDANCE WITH ARTICLE 825-10(B) OF THE STANDARD SPECIFICATIONS. A VERTICAL CONTRACTION JOINT SHALL BE LOCATED AT EACH THIRD POINT BETWEEN BARRIER RAIL EXPANSION JOINTS. ONLY ONE CONTRACTION JOINT IS REQUIRED AT MIDPOINT OF BARRIER RAIL SEGMENTS LESS THAN 20 FEET IN LENGTH AND NO CONTRACTION JOINTS ARE REQUIRED FOR THOSE SEGMENTS LESS THAN 10 FEET IN LENGTH.

ASPHALT WEARING SURFACE SHALL BE PLACED AFTER CAST-IN-PLACE CONCRETE BARRIER RAIL HAS BEEN CAST AND CURED.

THE MINIMUM 28 DAY COMPRESSIVE STRENGTH OF CONCRETE FOR 100' BOX BEAMS SHALL NOT BE LESS THAN 7500 PSI.

THE MINIMUM 28 DAY COMPRESSIVE STRENGTH OF CONCRETE FOR 80' BOX BEAMS SHALL NOT BE LESS THAN 5500 PSI.

BILL OF MATERIAL FOR CONCRETE BARRIER RAIL ON BOX BEAMS

BAR	BARS PER SPAN			TOTAL NO.	SIZE	TYPE	LENGTH	WEIGHT
	SPAN A	SPAN B						
✱B2	56	---		56	#5	STR	24'-3"	1416
✱B3	---	42		42	#5	STR	25'-11"	1135
✱S6	262	210		472	#5	7	5'-2"	2544
✱EPOXY COATED REINFORCING STEEL LBS.							5095	
CLASS AA CONCRETE CU.YDS.							40.4	
TOTAL LIN. FT. OF CONCRETE BARRIER RAIL							355.5	

BOX BEAMS REQUIRED

		NUMBER	LENGTH	TOTAL LENGTH
SPAN A	EXTERIOR B.B.	2	98'-9¾"	197'-7½"
	INTERIOR B.B.	8	98'-9¾"	790'-6"
SPAN B	EXTERIOR B.B.	2	78'-9¾"	157'-7½"
	INTERIOR B.B.	8	78'-9¾"	630'-6"
TOTAL		20		1776'-3"

DEAD LOAD DEFLECTION AND CAMBER

3'-0" X 3'-3" BOX BEAM UNIT	98'-9¾"	78'-9¾"
CAMBER (BOX BEAM UNIT ALONE IN PLACE)	2¼" (UP)	1" (UP)
DEFLECTION (SUPERIMPOSED DEAD LOAD) ✱✱✱	¾" (DOWN)	¼" (DOWN)
FINAL DEFLECTION	1½" (UP)	¾" (UP)

✱✱✱ INCLUDES FUTURE WEARING SURFACE

GRADE 270 STRANDS

	0.6"Ø L.R.
AREA (SQUARE INCHES)	0.217
ULTIMATE STRENGTH (LBS. PER STRAND)	58,600
APPLIED PRESTRESS (LBS. PER STRAND)	43,950

Stantec

Stantec Consulting Services Inc.
Suite 300, 801 Jones Franklin Road
Raleigh, NC
27606
Tel. 919.851.6866
Fax. 919.851.7024
www.stantec.com

DRAWN BY : J. L. HENNEKES DATE : 08-27-08
CHECKED BY : J. T. KELVINGTON DATE : 08-27-08

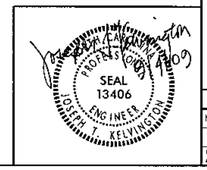

PROJECT NO. 33684.1.1
ALAMANCE COUNTY
STATION: 17+00.00 -L-

STATE OF NORTH CAROLINA
DEPARTMENT OF TRANSPORTATION
RALEIGH

PRESTRESSED CONCRETE BOX BEAM 100' SPAN AND 80' SPAN SPAN A AND B

REVISIONS						SHEET NO.
NO.	BY:	DATE:	NO.	BY:	DATE:	S-7
1			3			TOTAL SHEETS
2			4			19

U:\NTI00072\transportation\design\structures\drawing\84404_7_CRB_6_6.dgn 7/14/2009 8:52:30 AM $USER$

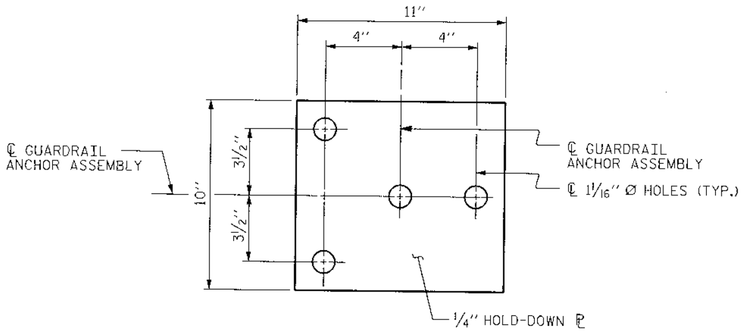

PLAN

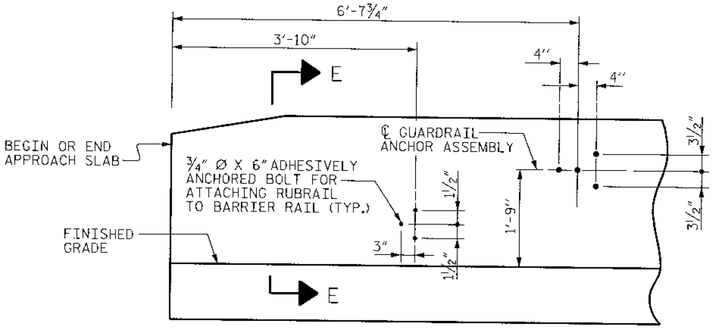

ELEVATION

FOR LOCATION OF RUBRAIL, SEE ROADWAY STD. 862.03

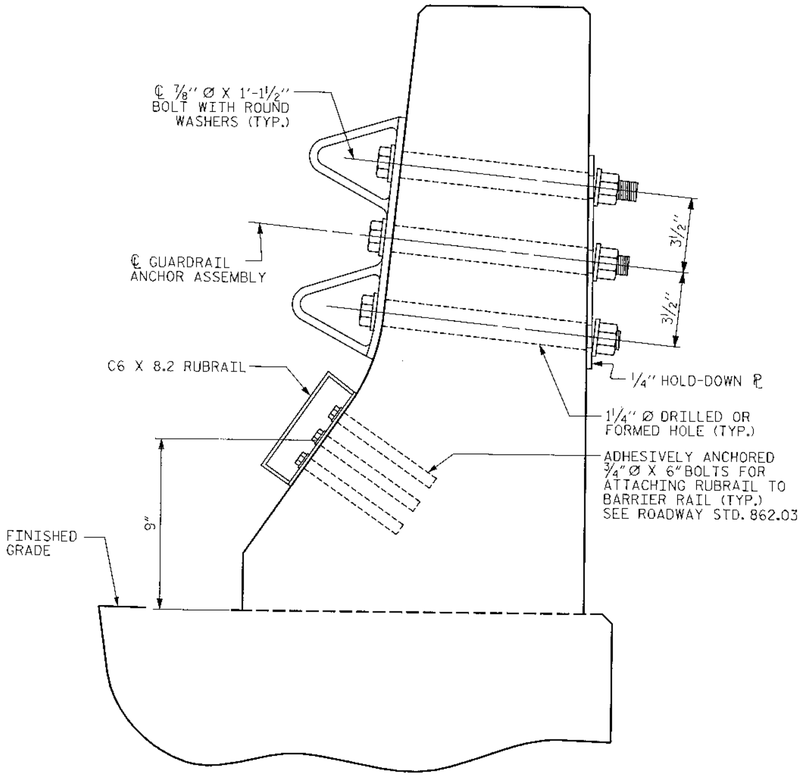

SECTION E-E

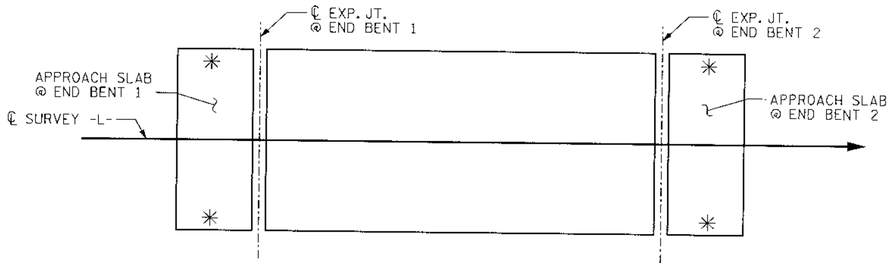

SKETCH SHOWING POINTS OF ATTACHMENTS

✳ INDICATES POINT OF ATTACHMENT

NOTES

THE GUARDRAIL ANCHOR ASSEMBLY SHALL CONSIST OF A ¼" HOLD DOWN PLATE AND 4 - ⅞" Ø BOLTS WITH NUTS AND WASHERS, RUBRAIL, AND ADHESIVELY ANCHORED BOLTS.

THE HOLD-DOWN PLATE SHALL CONFORM TO AASHTO M270 GRADE 36. AFTER FABRICATION, THE HOLD-DOWN PLATE SHALL BE HOT-DIP GALVANIZED IN ACCORDANCE WITH AASHTO M111.

BOLTS SHALL CONFORM TO THE REQUIREMENTS OF ASTM A307 AND NUTS SHALL CONFORM TO THE REQUIREMENTS OF AASHTO M291. BOLTS, NUTS AND WASHERS SHALL BE GALVANIZED. (AT THE CONTRACTOR'S OPTION, STAINLESS STEEL BOLTS, NUTS AND WASHERS MAY BE USED AS AN ALTERNATE FOR THE ⅞" Ø GALVANIZED BOLTS, NUTS AND WASHERS. THEY SHALL CONFORM TO OR EXCEED THE MECHANICAL REQUIREMENTS OF ASTM A307. THE USE OF THIS ALTERNATE SHALL BE APPROVED BY THE ENGINEER.)

THE GUARDRAIL ANCHOR ASSEMBLY IS REQUIRED AT ALL POINTS WHERE APPROACH GUARDRAIL IS TO BE ATTACHED TO THE END OF BARRIER RAIL. FOR POINTS OF ATTACHMENT, SEE SKETCH.

AFTER INSTALLATION, THE EXPOSED THREAD OF THE BOLT SHALL BE BURRED WITH A SHARP POINTED TOOL.

THE COST OF THE GUARDRAIL ANCHOR ASSEMBLY WITH BOLTS, NUTS, AND WASHERS COMPLETE IN PLACE SHALL BE INCLUDED IN THE LUMP SUM CONTRACT PRICE BID FOR BRIDGE APPROACH SLABS.

THE 1 ¼" Ø HOLES SHALL BE FORMED OR DRILLED WITH A CORE BIT. IMPACT TOOLS WILL NOT BE PERMITTED. ANY CONCRETE DAMAGED BY THIS WORK SHALL BE REPAIRED TO THE SATISFACTION OF THE ENGINEER.

THE C6 X 8.2 RUBRAIL IS TO BE ADHESIVELY ANCHORED TO THE RAIL USING THREE ¾"Ø X 6" BOLTS WITH WASHERS. LEVEL ONE FIELD TESTING IS REQUIRED, AND THE YIELD LOAD OF THE ¾"Ø BOLT IS 12 KIPS. FOR ADHESIVELY ANCHORED ANCHOR BOLTS OR DOWELS, SEE SPECIAL PROVISIONS. SEE ROADWAY STANDARD 862.03 FOR DETAILS AND LOCATION OF THE RUBRAIL.

GUARDRAIL ANCHOR ASSEMBLY DETAILS

✳ 9" DIMENSION IS FROM TOP OF RIDING SURFACE.
FOR BOX BEAM & CORED SLAB ADJUST DIMENSION FOR WEARING SURFACE.

Stantec Consulting Services Inc.
Suite 300, 801 Jones Franklin Road
Raleigh, NC
27606
Tel. 919.851.6866
Fax. 919.851.7024
www.stantec.com

DRAWN BY : J. L. HENNEKES DATE : 08-27-08
CHECKED BY : J. T. KELVINGTON DATE : 08-27-08

PROJECT NO. 33684.1.1
ALAMANCE COUNTY
STATION: 17+00.00 -L-

STATE OF NORTH CAROLINA
DEPARTMENT OF TRANSPORTATION
RALEIGH

GUARDRAIL ANCHORAGE FOR BARRIER RAIL

SEAL 13406 ENGINEER JOSEPH T. KELVINGTON

REVISIONS						SHEET NO.
NO.	BY:	DATE:	NO.	BY:	DATE:	S-8
1			3			TOTAL SHEETS
2			4			19

J:\17000712\transportation\design\structures\drawing\B4404_8_GRA.dgn 1/4/2009 08:34:09 AM $USER$

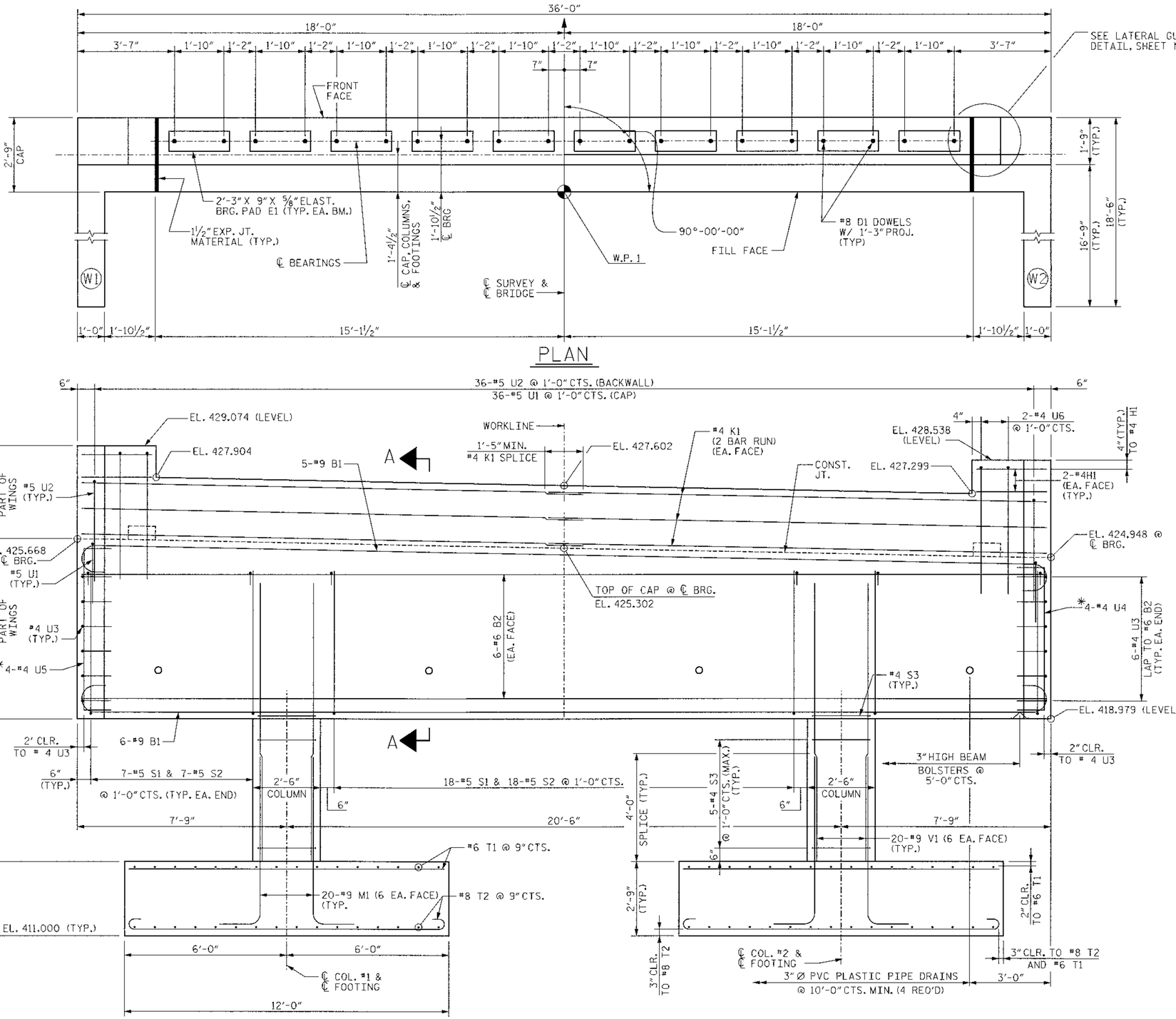

PLAN

*LAP #4 "U" WITH TOP #9 B1 BETWEEN FRONT FACE AND BACK WALL

ELEVATION

NOTE: DETAILS SHOWN ARE TYPICAL OF ALL COLUMNS & FOOTINGS UNLESS OTHERWISE NOTED.

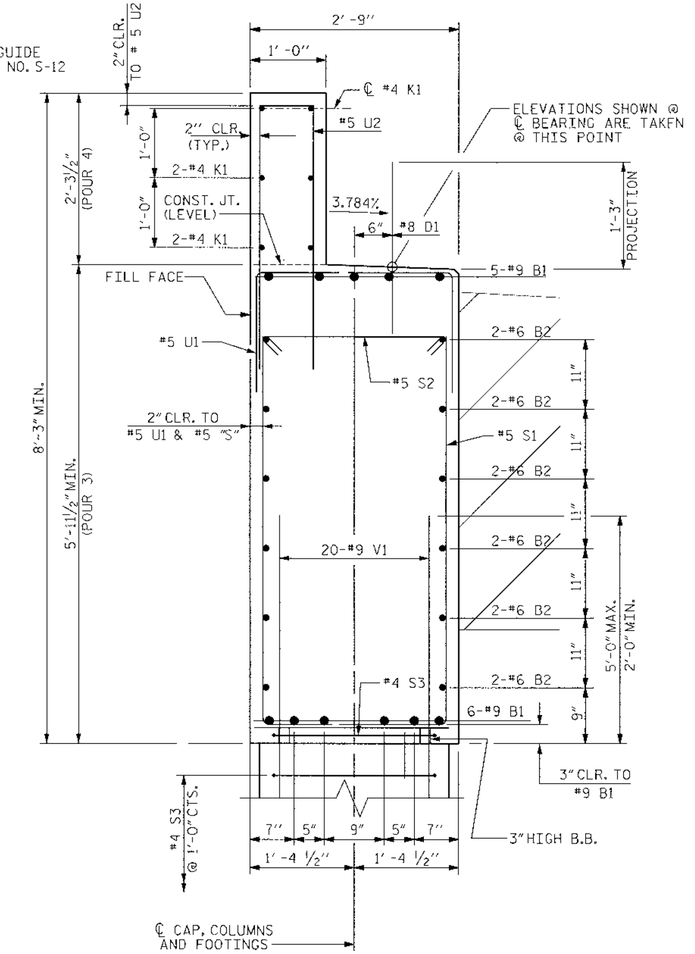

SECTION A-A

WING REINFORCING & DETAILS NOT SHOWN FOR CLARITY. FOR WING DETAILS, SEE SHEET NO. S-10.

FOR ADDITIONAL NOTES, SEE SHEET NO. S-11.

PROJECT NO. 33684.1.1

ALAMANCE COUNTY

STATION: 17+00.00 -L-

STATE OF NORTH CAROLINA
DEPARTMENT OF TRANSPORTATION
RALEIGH

SUBSTRUCTURE
END BENT 1

Stantec
Stantec Consulting Services Inc.
Suite 300, 801 Jones Franklin Road
Raleigh, NC
27606
Tel. 919.85 1.6856
Fax. 919.851.7024
www.stantec.com

DRAWN BY : J. L. HENNEKES DATE : 08-27-08
CHECKED BY : T. R. DUDECK DATE : 08-27-08

NORTH CAROLINA PROFESSIONAL ENGINEER SEAL 13406 JOSEPH T. KELVINGTON 7-14-2009

REVISIONS						SHEET NO.
NO.	BY:	DATE:	NO.	BY:	DATE:	S-9
1			3			TOTAL SHEETS
2			4			19

u:\7100712\1-transportation\design\structures\drawing\B4404_9.ebl.dgn 7/14/2009 09:52:01 AM $JSER#

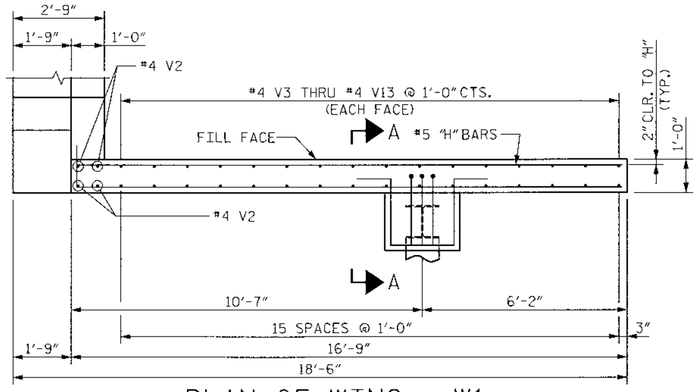

PLAN OF WING - W1

NOTE: BACKWALL REINFORCEMENT NOT SHOWN FOR CLARITY

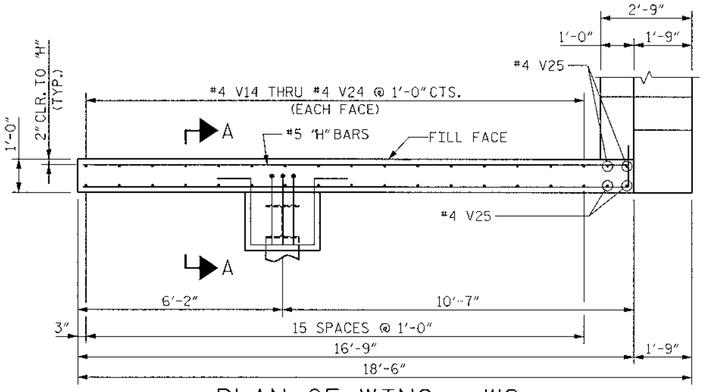

PLAN OF WING - W2

NOTE: BACKWALL REINFORCEMENT NOT SHOWN FOR CLARITY

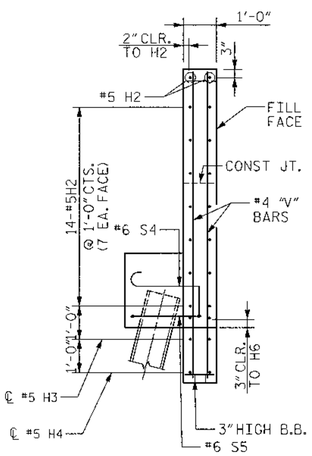

SECTION X-X

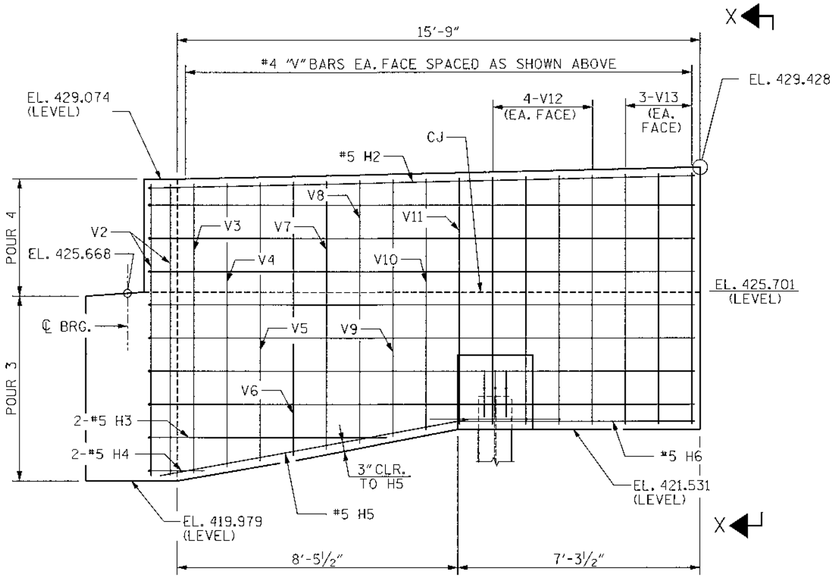

ELEVATION OF WING - W1

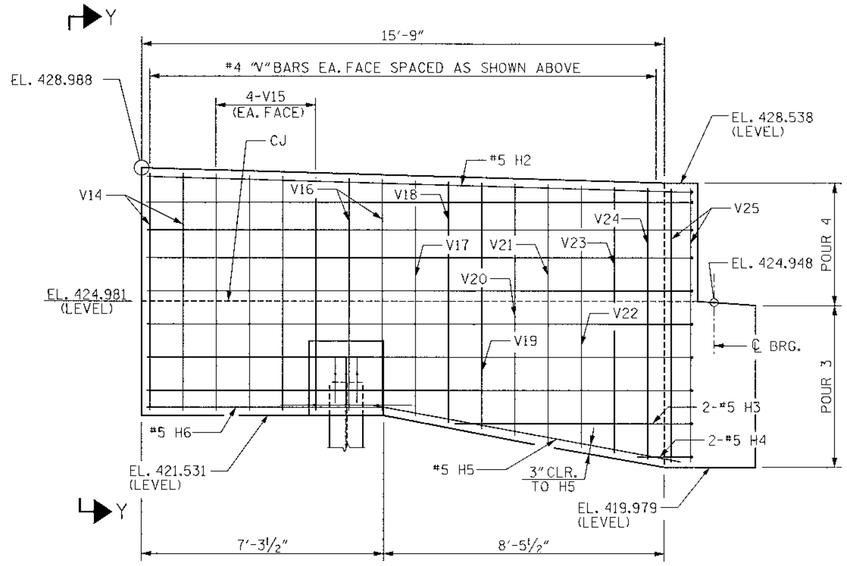

ELEVATION OF WING - W2

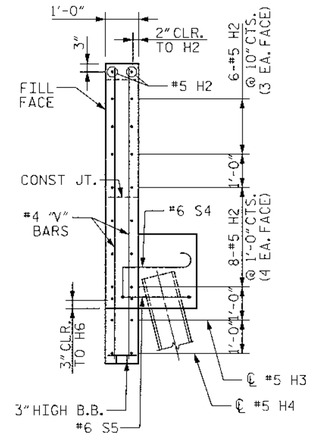

SECTION Y-Y

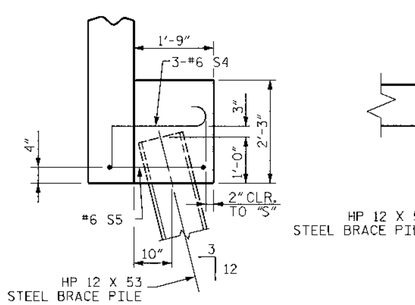

SECTION A-A

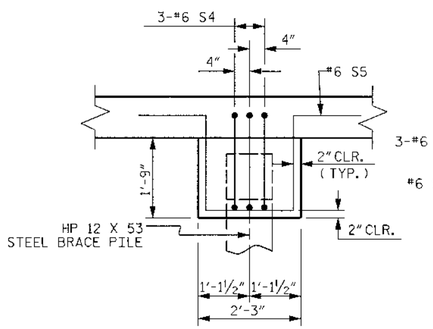

PLAN

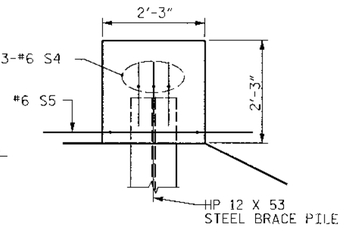

ELEVATION

WINGWALL BRACE DETAILS

PROJECT NO. 33684.1.1

ALAMANCE COUNTY

STATION: 17+00.00 -L-

STATE OF NORTH CAROLINA
DEPARTMENT OF TRANSPORTATION
RALEIGH

SUBSTRUCTURE END BENT 1 WINGWALL DETAILS

Stantec Consulting Services Inc.
Suite 300, 801 Jones Franklin Road
Raleigh, NC
27606
Tel. 919.851.6686
Fax. 919.851.7024
www.stantec.com

DRAWN BY : J. L. HENNEKES DATE : 08-27-08
CHECKED BY : T. R. DUDECK DATE : 08-27-08

NORTH CAROLINA PROFESSIONAL ENGINEER SEAL 13406 JOSEPH T. KELVINGTON

REVISIONS					
NO.	BY:	DATE:	NO.	BY:	DATE:
1			3		
2			4		

SHEET NO. S-10

TOTAL SHEETS 19

U:\7000\72\transportation\design\structures\drawing\B4404_10_bt1_WW.dgn 7/4/2009 10:52:01 AM bUSER$

NOTES:

THE CONTRACTOR'S ATTENTION IS CALLED TO THE FACT THAT THE LONGITUDINAL COLUMN REINFORCEMENT IS DETAILED WITH 3 FEET OF EXTRA LENGTH.

STIRRUPS IN CAP MAY BE SHIFTED AS NECESSARY TO CLEAR DOWELS.

FOR PIPE DRAIN DETAILS, SEE SHEET NO. S-12.

PIPE DRAINS MAY BE REPOSITIONED AS NEEDED TO CLEAR REINF. STEEL.

THE CONTRACTOR SHALL PROVIDE FOR INSTALLATION OF THE 4"Ø DRAIN PIPE THRU THE WING WALL AS REQ'D. FOR REINFORCED BRIDGE APPROACH FILL, SEE SHEET S-18. REINFORCING STEEL IN THE WING WALL MAY BE SHIFTED AS NECESSARY TO CLEAR THE PIPE.

BAR TYPES

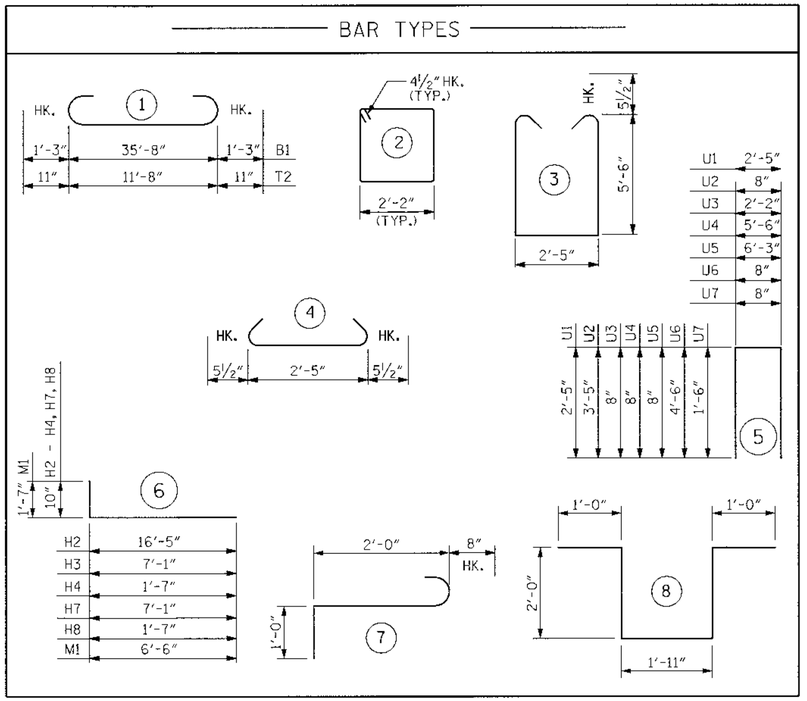

BILL OF MATERIAL

END BENT 1

BAR	NO.	SIZE	TYPE	LENGTH	WEIGHT	BAR	NO.	SIZE	TYPE	LENGTH	WEIGHT
B1	11	#9	1	38'-2"	1427	V1	40	#9	STR	10'-4"	1405
B2	12	#6	STR	35'-8"	643	V2	4	#4	STR	8'-9"	23
B3	4	#4	STR	1'-5"	4	V3	2	#4	STR	8'-8"	12
						V4	2	#4	STR	8'-6"	11
D1	20	#8	STR	2'-3"	120	V5	2	#4	STR	8'-4"	11
						V6	2	#4	STR	8'-2"	11
H1	8	#4	STR	2'-6"	13	V7	2	#4	STR	8'-0"	11
H2	32	#5	6	17'-3"	576	V8	2	#4	STR	7'-10"	10
H3	4	#5	6	7'-11"	34	V9	2	#4	STR	7'-8"	10
H4	4	#5	6	2'-5"	10	V10	2	#4	STR	7'-6"	10
H5	4	#5	STR	9'-6"	40	V11	2	#4	STR	7'-4"	10
H6	4	#5	STR	7'-3"	30	V12	8	#4	STR	7'-5"	40
						V13	6	#4	STR	7'-6"	10
K1	12	#4	STR	18'-7"	149	V14	4	#4	STR	7'-1"	19
						V15	8	#4	STR	7'-0"	37
M1	40	#9	6	7'-10"	1065	V16	4	#4	STR	6'-11"	18
						V17	2	#4	STR	7'-0"	9
S1	32	#5	3	14'-4"	478	V18	2	#4	STR	7'-2"	10
S2	32	#5	4	3'-4"	111	V19	2	#4	STR	7'-4"	10
S3	12	#4	2	9'-5"	75	V20	2	#4	STR	7'-6"	10
S4	6	#6	7	3'-8"	33	V21	2	#4	STR	7'-8"	10
S5	2	#6	8	7'-11"	24	V22	2	#4	STR	7'-10"	10
						V23	2	#4	STR	7'-11"	11
T1	32	#6	STR	11'-8"	561	V24	2	#4	STR	8'-1"	11
T2	32	#8	1	13'-6"	1153	V25	4	#4	STR	8'-2"	22
U1	36	#5	5	6'-11"	260						
U2	36	#5	5	7'-6"	282						
U3	12	#4	5	3'-6"	28						
U4	4	#4	5	6'-10"	18						
U5	4	#4	5	7'-7"	20						
U6	4	#4	5	9'-8"	26						
U7	6	#4	5	3'-8"	15						

REINFORCING STEEL	LBS 8946
CLASS A CONCRETE BREAKDOWN	
POUR 1	
(FOOTING)	CU. YDS. 32.0
POUR 2	
(COLUMNS)	CU. YDS. 2.4
POUR 3	
(CAP & BOT. OF WINGS)	CU. YDS. 28.8
POUR 3	
(BACKWALL & TOP OF WINGS)	CU. YDS. 7.7
CLASS A CONCRETE TOTAL	CU. YDS. 70.9
HP 12x53 STEEL PILES	
NO. 2	LIN. FT. 20

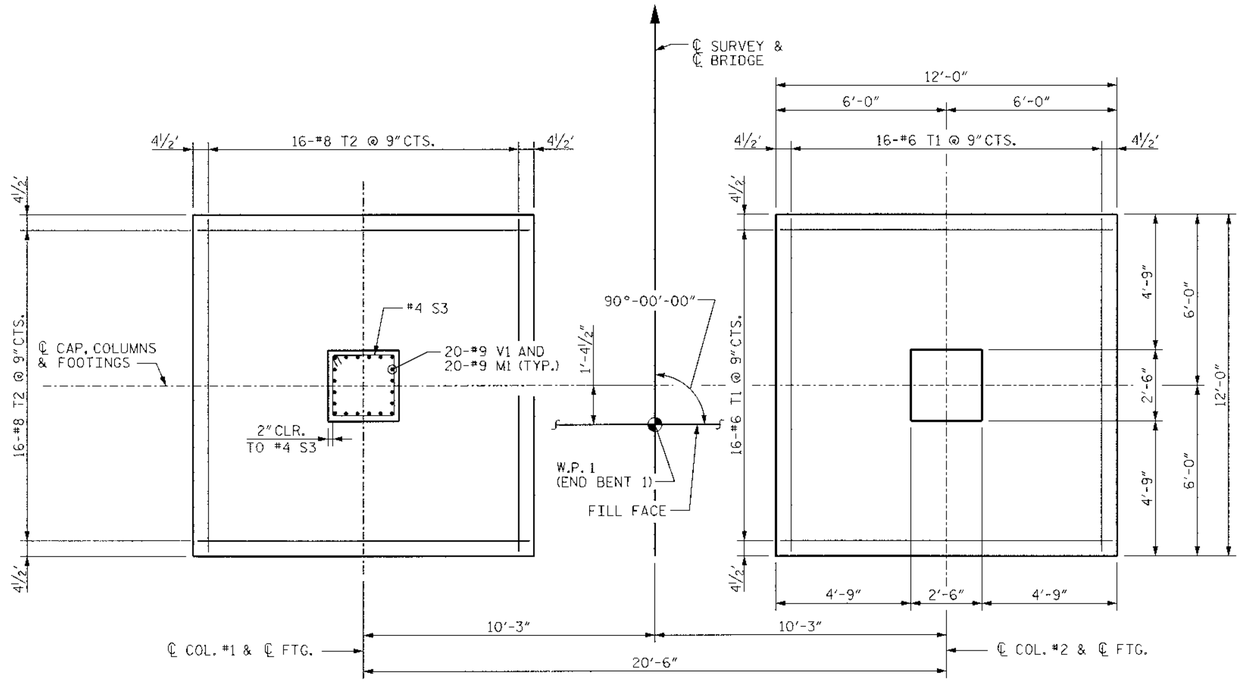

BOTTOM TOP

PLAN OF FOOTINGS - END BENT 1

(FOOTING DIMENSIONS AND DETAILS SHOWN ARE TYPICAL FOR EACH FOOTING)

PROJECT NO. 33684.3.1

ALAMANCE COUNTY

STATION: 17+00.00 -L-

STATE OF NORTH CAROLINA
DEPARTMENT OF TRANSPORTATION
RALEIGH

SUBSTRUCTURE
END BENT 1
BILL OF MATERIAL

REVISIONS						SHEET NO.
NO.	BY:	DATE:	NO.	BY:	DATE:	S-11
1			3			TOTAL SHEETS
2			4			19

Stantec
Stantec Consulting Services Inc.
Suite 300, 801 Jones Franklin Road
Raleigh, NC
27606
Tel. 919.851.6866
Fax. 919.851.7024
www.stantec.com

DRAWN BY : J. L. HENNEKES DATE : 09-08-09
CHECKED BY : T. R. DUDECK DATE : 09-08-09

SEAL 13406 ENGINEER JOSEPH T. KELVINGTON — 09/08/2009

L:\170012\transportation\designs\structures\drawing\B1404_JLEBL_BCM.dgn 9/8/2009 3:09:07 PM EUSERS

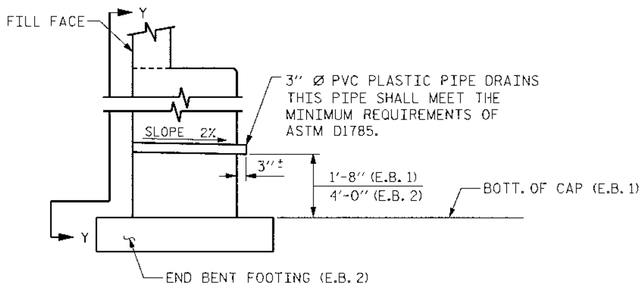

SECTION THRU CAP

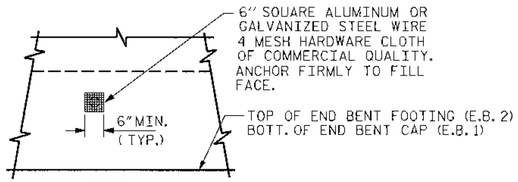

VIEW Y-Y

NOTE: NO SEPARATE PAYMENT WILL BE MADE FOR FURNISHING AND INSTALLING THE PVC PLASTIC PIPE DRAINS, HARDWARE CLOTH AND FASTENERS. THE ENTIRE COST OF THIS WORK SHALL BE INCLUDED IN THE UNIT CONTRACT PRICE BID FOR THE SEVERAL PAY ITEMS.

PIPE DRAIN DETAILS

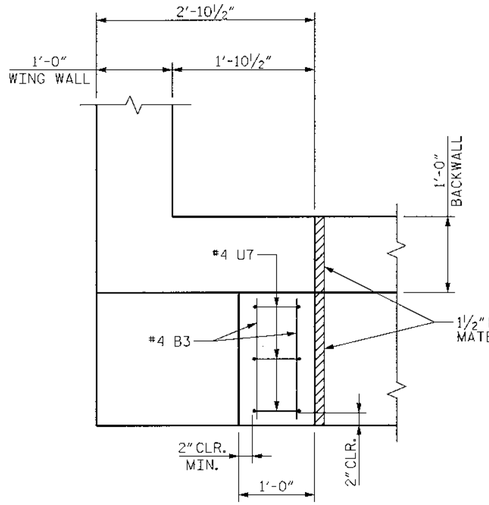

PLAN

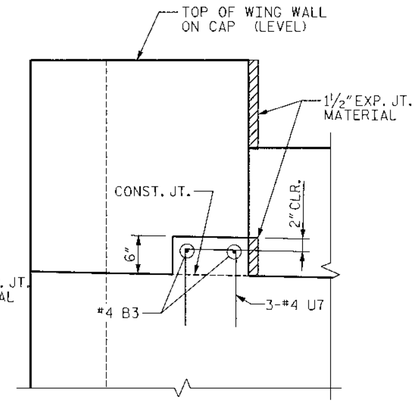

ELEVATION

LATERAL GUIDE

(TYP. EA. SIDE)

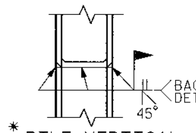

* PILE VERTICAL

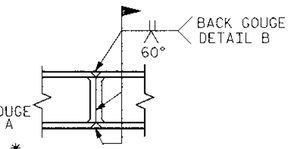

* PILE HORIZONTAL OR VERTICAL

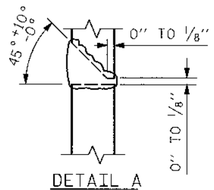

DETAIL A

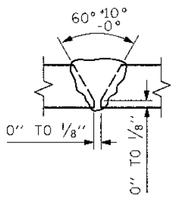

DETAIL B

PILE SPLICE DETAILS

*POSITION OF PILE DURING WELDING.

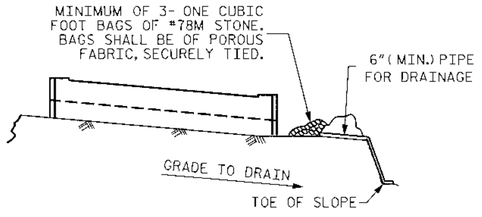

BAGGED STONE AND PIPE SHALL BE PLACED IMMEDIATELY AFTER COMPLETION OF END BENT EXCAVATION. PIPE MAY BE EITHER CONCRETE, CORRUGATED STEEL, CORRUGATED ALUMINUM ALLOY, OR CORRUGATED PLASTIC. PERFORATED PIPE WILL NOT BE ALLOWED.

BAGGED STONE SHALL REMAIN IN PLACE UNTIL THE ENGINEER DIRECTS THAT IT BE REMOVED. THE CONTRACTOR SHALL REMOVE AND DISPOSE OF SILT ACCUMULATIONS AT BAGGED STONE WHEN SO DIRECTED BY THE ENGINEER. BAGS SHALL BE REMOVED AND REPLACED WHENEVER THE ENGINEER DETERMINES THAT THEY HAVE DETERIORATED AND LOST THEIR EFFECTIVENESS.

NO SEPARATE PAYMENT WILL BE MADE FOR THIS WORK AND THE ENTIRE COST OF THIS WORK SHALL BE INCLUDED IN THE UNIT CONTRACT PRICE BID FOR THE SEVERAL PAY ITEMS.

TEMPORARY DRAINAGE AT END BENT

Stantec
Stantec Consulting Services Inc.
Suite 300, 801 Jones Franklin Road
Raleigh, NC
27606
Tel. 919.851.6886
Fax. 919.851.7024
www.stantec.com

DRAWN BY : J. L. HENNEKES DATE : 08-27-08
CHECKED BY : T. R. DUDECK DATE : 08-27-08

SEAL 13406 ENGINEER JOSEPH KELVINGTON NORTH CAROLINA PROFESSIONAL

PROJECT NO. 33684.1.1
ALAMANCE COUNTY
STATION: 17+00.00 -L-

STATE OF NORTH CAROLINA
DEPARTMENT OF TRANSPORTATION
RALEIGH

SUBSTRUCTURE
END BENT DETAILS

REVISIONS						SHEET NO.
NO.	BY:	DATE:	NO.	BY:	DATE:	S-12
1			3			TOTAL SHEETS
2			4			19

u:\7000112\transportation\design\structures\drawing\B4404_2_ES_Det.dgn 1/14/2009 10:32:02 AM sushida

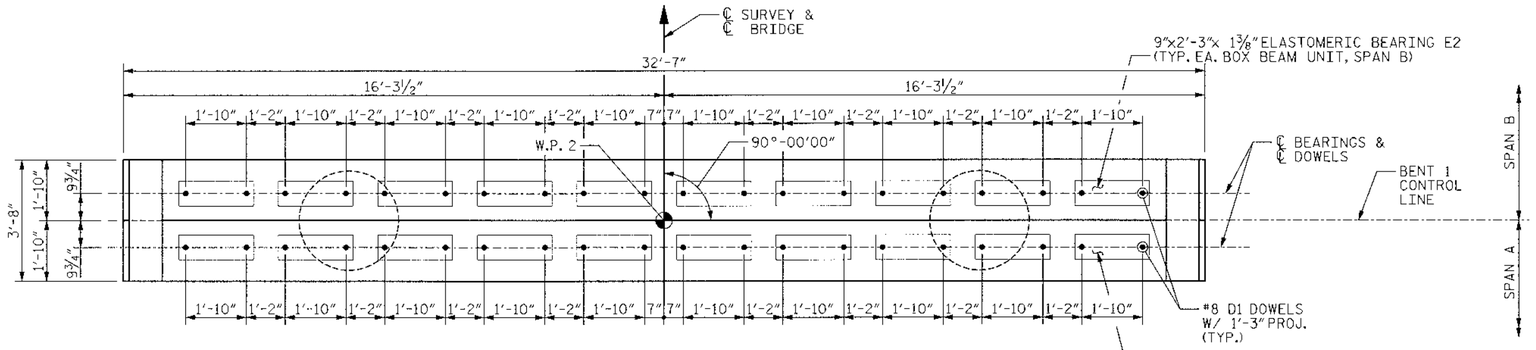

PLAN

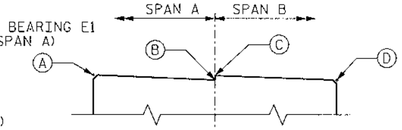

TOP OF CAP PROFILE
(NOT TO SCALE)

TABLE "L" (LEFT SIDE)	
POINT	ELEVATION
Ⓐ	421.991
Ⓑ	421.921
Ⓒ	421.921
Ⓓ	421.852

TABLE "R" (RT. SIDE ELEV.)	
POINT	ELEVATION
Ⓐ	421.339
Ⓑ	421.269
Ⓒ	421.269
Ⓓ	421.200

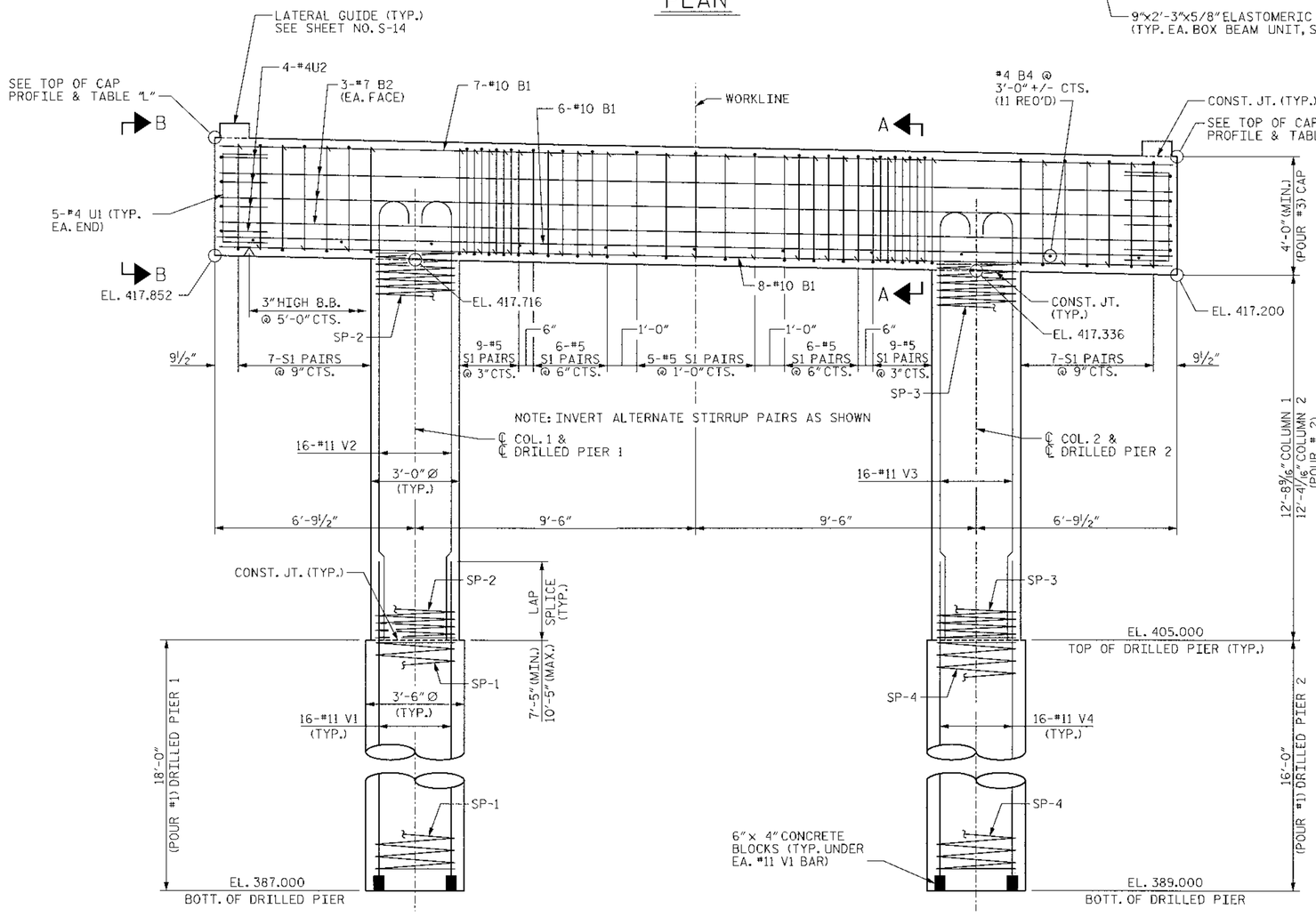

ELEVATION

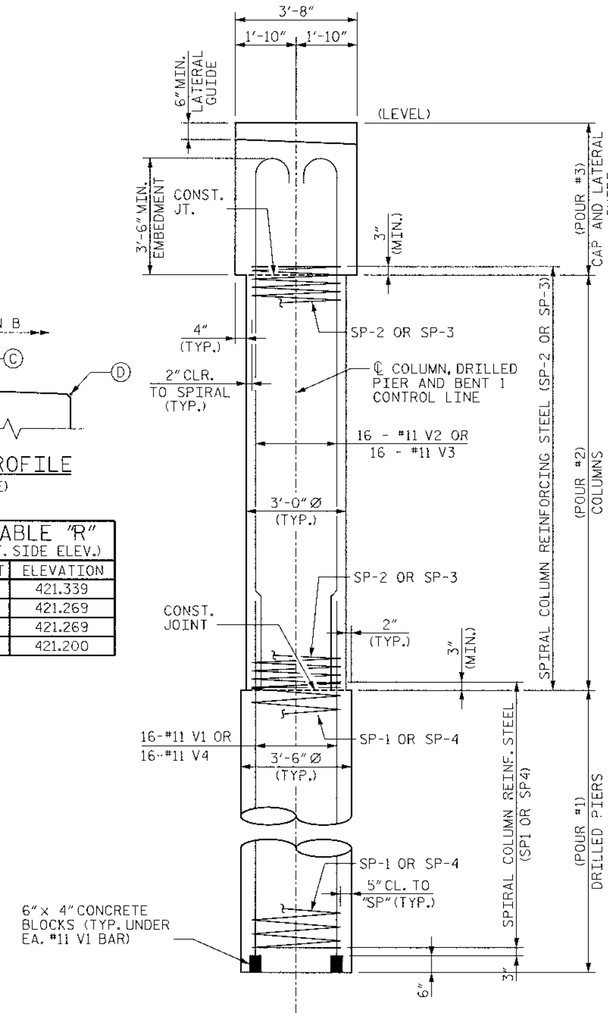

END ELEVATION

PROJECT NO. 33684.1.1

ALAMANCE COUNTY

STATION: 17+00.00 -L-

STATE OF NORTH CAROLINA
DEPARTMENT OF TRANSPORTATION
RALEIGH

SUBSTRUCTURE INTERIOR BENT 1

NOTES:

1. DETAILS SHOWN ARE TYPICAL OF ALL COLUMNS & DRILLED PIERS UNLESS OTHERWISE NOTED.
2. SEE "SUBSTRUCTURE INTERIOR BENT DETAILS" SHEET S-14 FOR SECTION A-A & VIEW B-B.
3. THE CONTRACTOR'S ATTENTION IS CALLED TO THE FACT THAT THE LONGITUDINAL REINFORCEMENT FOR THE COLUMN IS DETAILED WITH 3 FEET OF EXTRA LENGTH.
4. HOOKS ON "V" BARS MAY BE TURNED AS NECESSARY FOR PLACING REINFORCING STEEL.
5. STIRRUPS IN CAP MAY BE SHIFTED AS NECESSARY TO CLEAR DOWELS.

Stantec
Stantec Consulting Services Inc.
Suite 300, 801 Jones Franklin Road
Raleigh, NC
27606
Tel. 919.851.6866
Fax. 919.851.7024
www.stantec.com

DRAWN BY : J. L. HENNEKES DATE : 08-27-08
CHECKED BY : T. R. DUDECK DATE : 08-27-08

SEAL 13406 ENGINEER KELVINGTON

REVISIONS						SHEET NO.
NO.	BY:	DATE:	NO.	BY:	DATE:	S-13
1			3			TOTAL SHEETS
2			4			19

u:\17000\21\transportation\designs\structures\drawings\36404.15.18.dgn 1/6/2009 10:52:03 A.M. $USER$

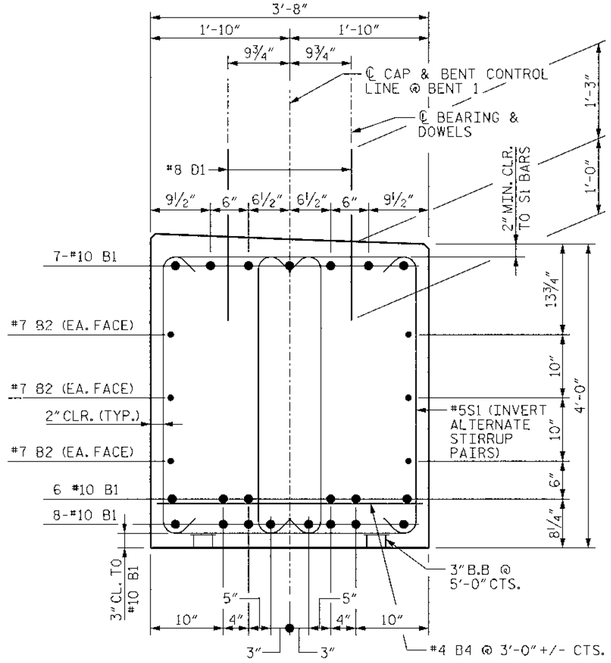

SECTION A-A

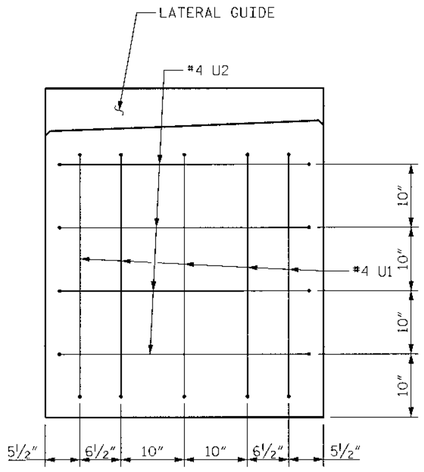

VIEW B-B
(TYP. EA. END)

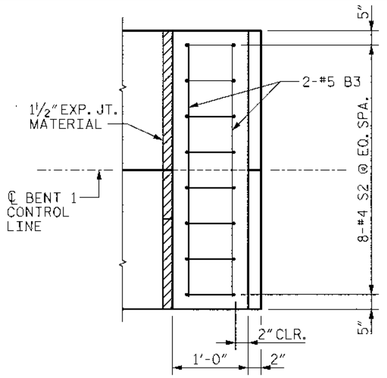

PLAN

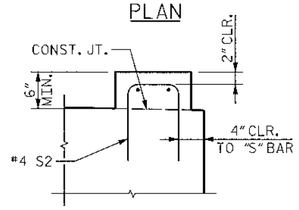

ELEVATION

LATERAL GUIDE

BAR TYPES

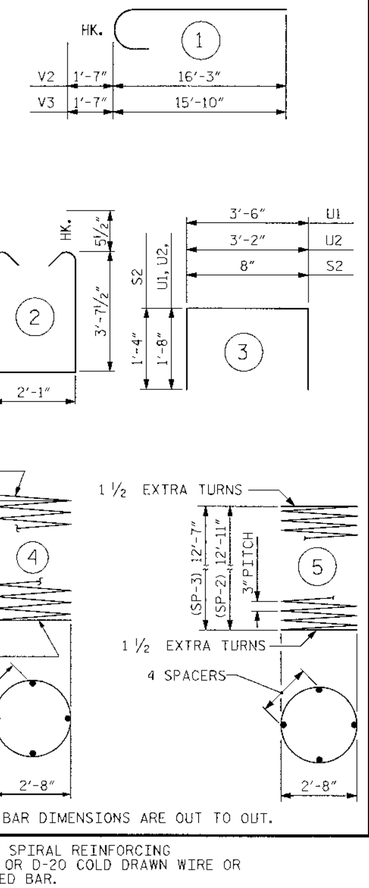

ALL BAR DIMENSIONS ARE OUT TO OUT.

BILL OF MATERIAL
BENT 1

BAR	NO.	SIZE	TYPE	LENGTH	WEIGHT
B1	21	#10	STR	32'-1"	2,899
B2	6	#7	STR	32'-1"	393
B3	4	#5	STR	3'-4"	14
B4	11	#4	STR	3'-4"	24
D1	40	#8	STR	2'-3"	240
S1	98	#5	2	10'-3"	1,048
S2	16	#4	3	3'-4"	36
U1	10	#4	3	6'-10"	46
U2	8	#4	3	6'-6"	35
V1	16	#11	STR.	27'-11"	2,373
V2	16	#11	1	17'-10"	1,516
V3	16	#11	1	17'-5"	1,481
V4	16	#11	STR.	25'-11"	2,203

REINFORCING STEEL LBS. 12,308

SP-1	1	✱✱	4	359'-10"	375
SP-2	1	✱✱	5	452'-8"	302
SP-3	1	✱✱	5	440'-1"	294
SP-4	1	✱✱	4	320'-4"	334

SPIRAL COLUMN REINF. STEEL LBS. 1,305

CLASS A CONCRETE BREAKDOWN:
POUR #2 COLUMNS CU. YDS. 6.5
POUR #3 CAP CU. YDS. 18.1
TOTAL CLASS A CONCRETE CU. YDS. 24.6

DRILLED PIER CONCRETE BREAKDOWN:
POUR #1 DRILLED PIERS CU. YDS. 12.1

3'-6" Ø DRILLED PIERS NOT IN SOIL
LIN. FT. 14.0

3'-6" Ø DRILLED PIERS IN SOIL
LIN. FT. 20.0

SID INSPECTION 1 EACH

✱✱ THE SP-2 & SP-3 SPIRAL REINFORCING STEEL SHALL BE W20 OR D-20 COLD DRAWN WIRE OR #4 PLAIN OR DEFORMED BAR.

✱✱✱ THE SP-1 & SP-4 SPIRAL REINFORCING STEEL SHALL BE W31 OR D-31 COLD DRAWN WIRE OR #5 PLAIN OR DEFORMED BAR.

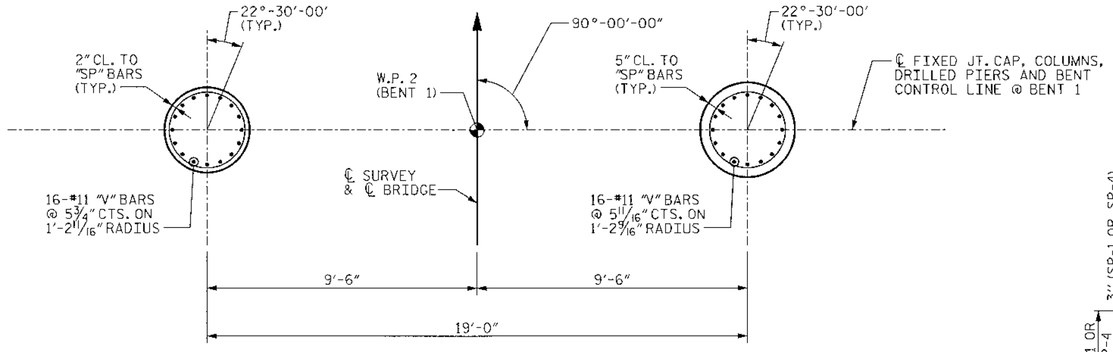

PLAN OF COLUMN
REINFORCING STEEL AND DIMENSIONS ARE TYPICAL FOR ALL COLUMNS

PLAN OF DRILLED PIER
REINFORCING STEEL AND DIMENSIONS ARE TYPICAL FOR ALL DRILLED PIERS

PLAN OF COLUMNS AND DRILLED PIERS

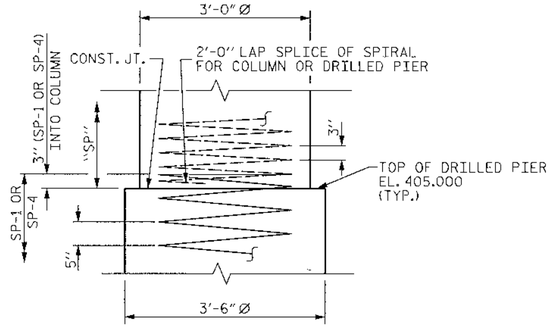

CONSTRUCTION JOINT DETAIL

PROJECT NO. 33684.1.1
ALAMANCE COUNTY
STATION: 17+00.00 -L-

STATE OF NORTH CAROLINA
DEPARTMENT OF TRANSPORTATION
RALEIGH

SUBSTRUCTURE
INTERIOR BENT DETAILS

REVISIONS					
NO.	BY:	DATE:	NO.	BY:	DATE:
1			3		
2			4		

SHEET NO. S-14
TOTAL SHEETS 19

Stantec Consulting Services Inc.
Suite 300, 801 Jones Franklin Road
Raleigh, NC
27606
Tel. 919.851.6666
Fax. 919.851.7024
www.stantec.com

DRAWN BY : J. L. HENNEKES DATE : 08-27-08
CHECKED BY : T. R. DUDECK DATE : 08-27-08

SEAL 13406 ENGINEER JOSEPH KELVINGTON

n:\7100072\transportation\designs\structures\drawing\B4404_14_18_DB1.dgn 7/14/2009 10:52:04 AM $JSIPS

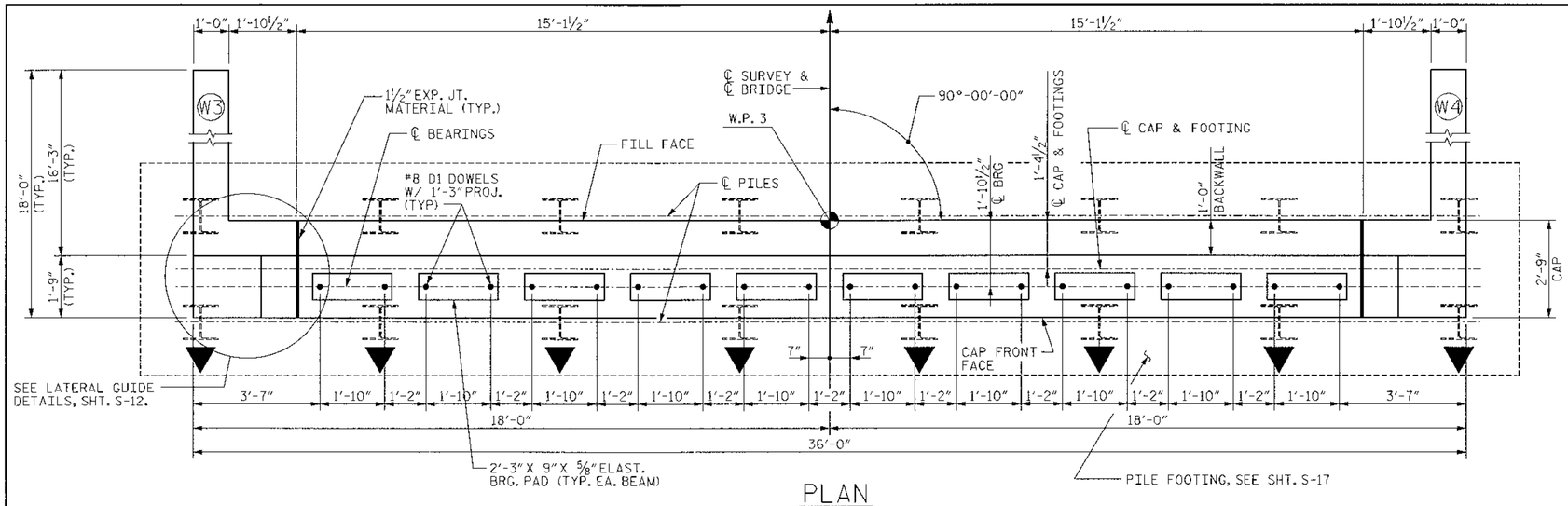

PLAN

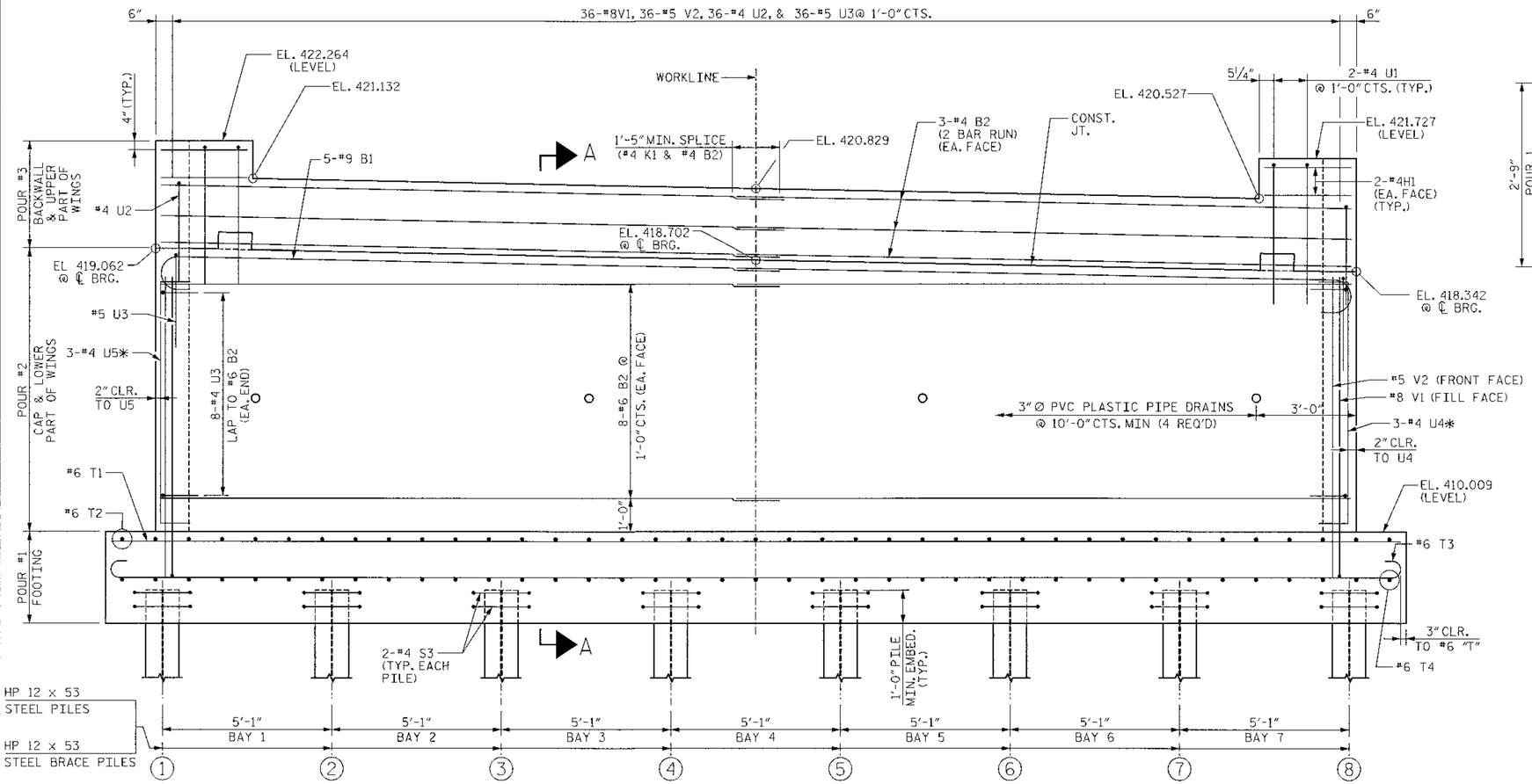

ELEVATION

* LAP #4 "U" W/ TOP OF #9 B1 BETWEEN FRONT FACE OF CAP AND BACKWALL

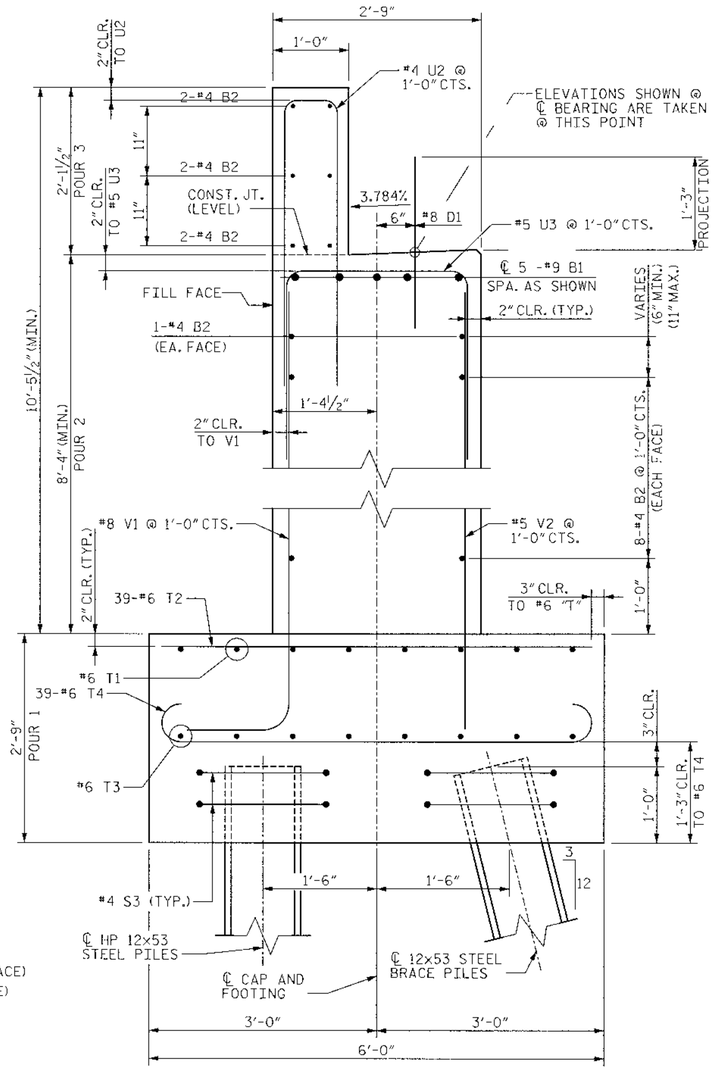

SECTION A-A

FOR ADDITIONAL NOTES, SEE SHEET NO. S-17.

PROJECT NO. 33684.1.1

ALAMANCE COUNTY

STATION: 17+00.00 -L-

STATE OF NORTH CAROLINA
DEPARTMENT OF TRANSPORTATION
RALEIGH

SUBSTRUCTURE END BENT 2

Stantec
Stantec Consulting Services Inc.
Suite 300, 801 Jones Franklin Road
Raleigh, NC
27606
Tel. 919.851.6866
Fax. 919.851.7024
www.stantec.com

DRAWN BY : J. L. HENNEKES DATE : 08-27-08
CHECKED BY : T. R. DUDECK DATE : 08-27-08

SEAL 13406 ENGINEER JOSEPH V. KELVINGTON — 12/17/2009

REVISIONS						SHEET NO.
NO.	BY:	DATE:	NO.	BY:	DATE:	S-15
1			3			TOTAL SHEETS
2			4			19

I:\17000712\transportation\designs\structures\drawings\B4404_05_EB2.dgn 12/14/2009 10:52:05 AM $USER$

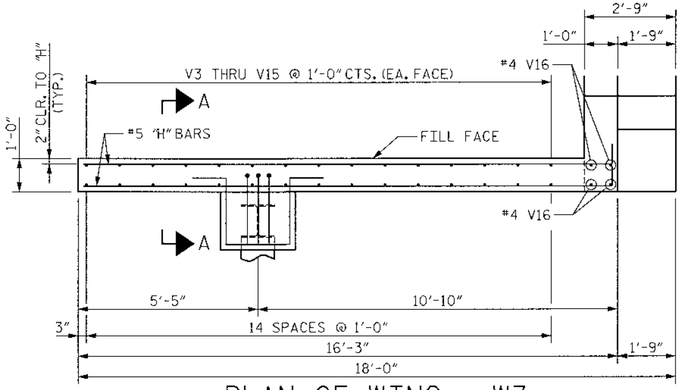

PLAN OF WING - W3

NOTE: BACKWALL REINFORCEMENT NOT SHOWN FOR CLARITY

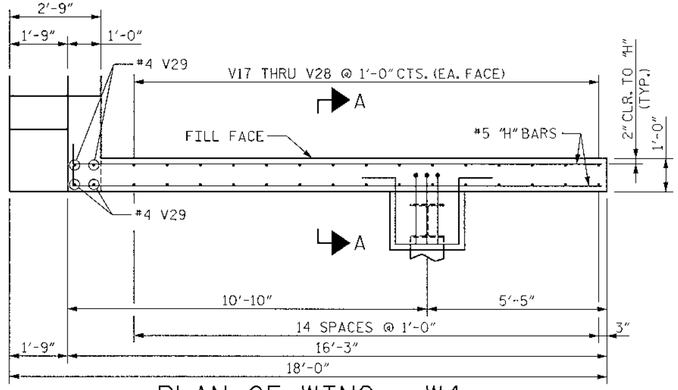

PLAN OF WING - W4

BACKWALL REINFORCEMENT NOT SHOWN FOR CLARITY NOTE:

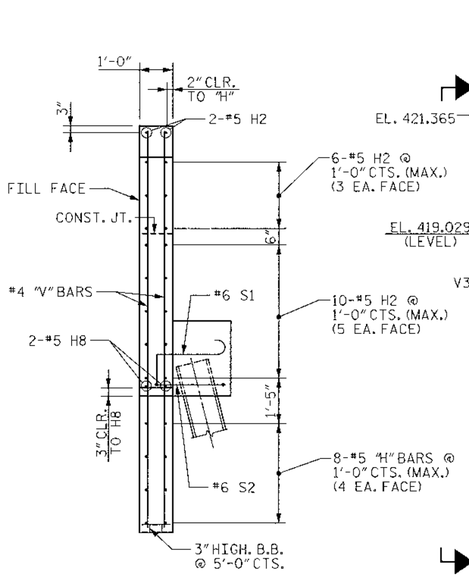

SECTION X-X

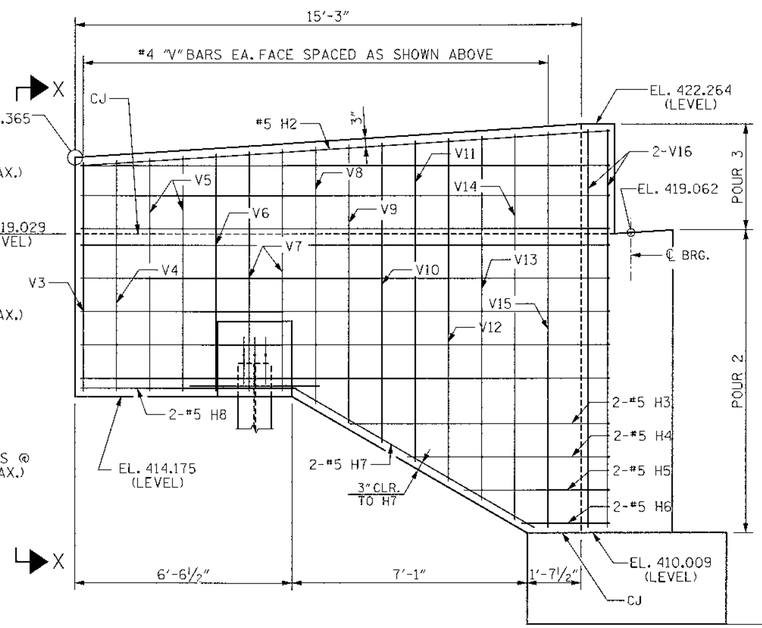

ELEVATION OF WING - W3

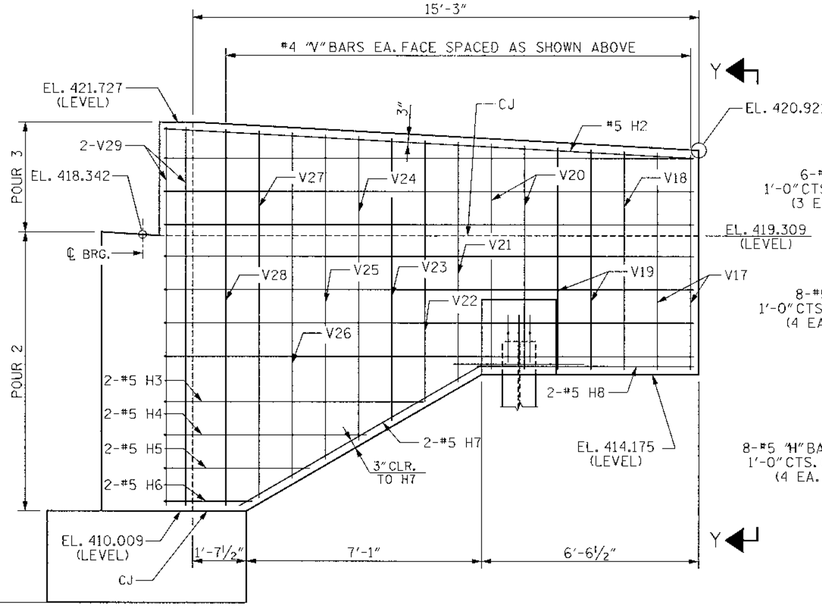

ELEVATION OF WING - W4

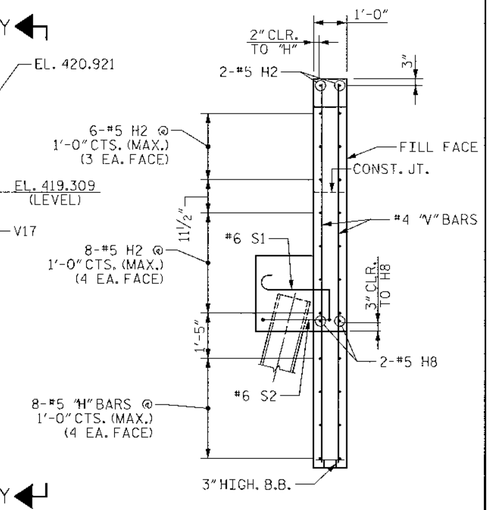

SECTION Y-Y

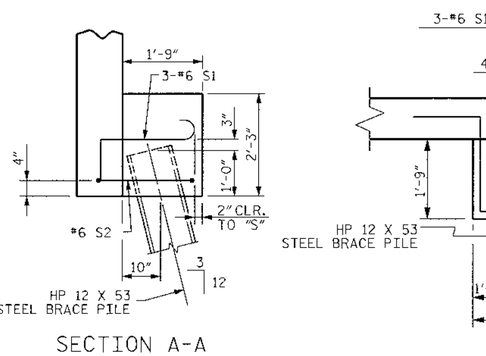

SECTION A-A

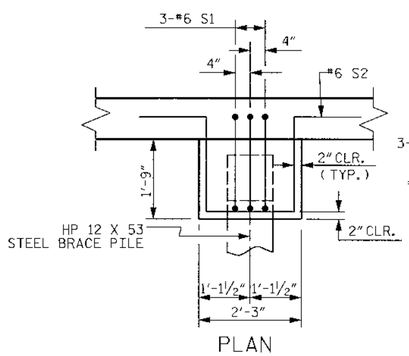

PLAN

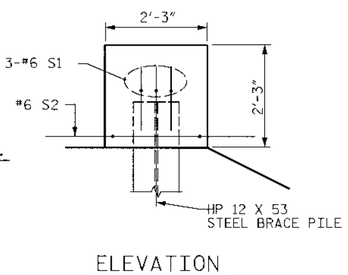

ELEVATION

WINGWALL BRACE DETAILS

PROJECT NO. 33684.1.1

ALAMANCE COUNTY

STATION: 17+00.00 -L-

STATE OF NORTH CAROLINA
DEPARTMENT OF TRANSPORTATION
RALEIGH

SUBSTRUCTURE END BENT 2 WINGWALL DETAILS

Stantec Consulting Services Inc.
Suite 300, 801 Jones Franklin Road
Raleigh, NC
27606
Tel. 919.851.6866
Fax. 919.851.7024
www.stantec.com

DRAWN BY : J. L. HENNEKES DATE : 08-27-08
CHECKED BY : T. R. DUDECK DATE : 08-27-08

SEAL 13406 ENGINEER KELVINGTON

REVISIONS						SHEET NO.
NO.	BY:	DATE:	NO.	BY:	DATE:	S-16
1			3			TOTAL SHEETS
2			4			19

\\v7.000712\transportation\design\structures\dr-awing\34204.16.FBZ_WW.cgn 7/14/2009 10:52:35 AM eSER6

NOTES:

FOR PILE SPLICE DETAILS, SEE SHEET NO. S-12.

STIRRUPS IN CAP MAY BE SHIFTED AS NECESSARY TO CLEAR DOWELS.

FOR WING WALL DETAILS, SEE SHEET NO. S-16

THE CONTRACTOR SHALL PROVIDE FOR INSTALLATION OF THE 4" DIA. DRAIN PIPE THRU THE WING WALL AS REQ'D. FOR REINFORCED BRIDGE APPROACH FILL. SEE SHEET S-18. REINFORCING STEEL IN THE WING WALL MAY BE SHIFTED AS NECESSARY TO CLEAR THE PIPE.

FOR PIPE DRAIN DETAILS, SEE SHT. S-12.

PIPE DRAINS MAY BE REPOSITIONED AS NEEDED TO CLEAR REINF. STEEL.

BAR TYPES

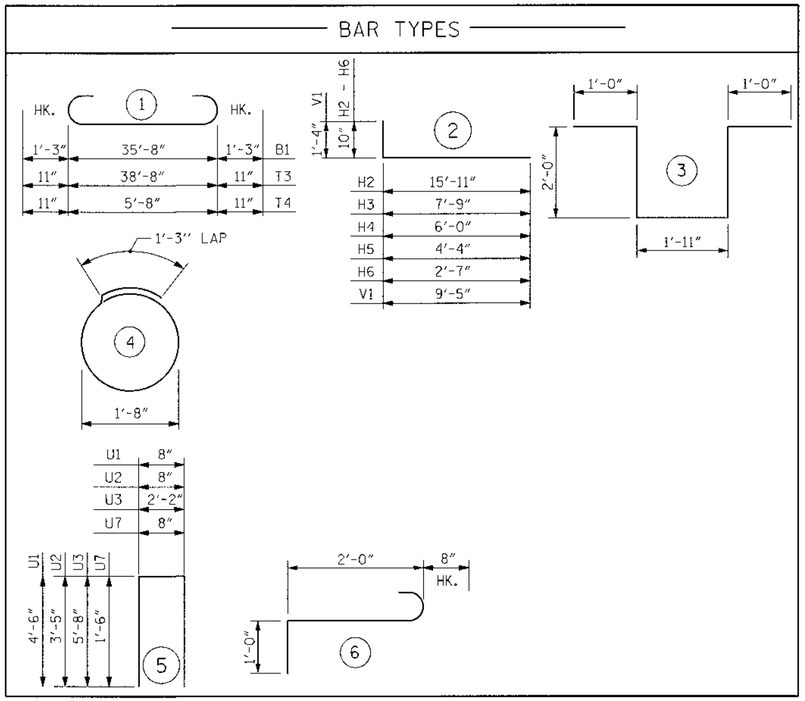

BILL OF MATERIAL

END BENT 2

BAR	NO.	SIZE	TYPE	LENGTH	WEIGHT	BAR	NO.	SIZE	TYPE	LENGTH	WEIGHT
B1	5	#9	1	38'-2"	649	V1	36	#8	6	10'-9"	1033
B2	44	#4	STR	18'-7"	546	V2	36	#5	STR	9'-5"	354
B3	4	#4	STR	1'-5"	4	V3	2	#4	STR	6'-10"	9
						V4	2	#4	STR	6'-11"	9
D1	20	#8	STR	2'-3"	120	V5	4	#4	STR	7'-0"	19
						V6	2	#4	STR	7'-1"	9
H1	4	#4	STR	2'-6"	7	V7	4	#4	STR	7'-2"	19
H2	34	#5	2	16'-9"	594	V8	2	#4	STR	7'-8"	10
H3	4	#5	2	8'-7"	36	V9	2	#4	STR	8'-4"	11
H4	4	#5	2	6'-10"	29	V10	2	#4	STR	9'-0"	12
H5	4	#5	2	5'-2"	22	V11	2	#4	STR	9'-7"	13
H6	4	#5	2	3'-5"	14	V12	2	#4	STR	10'-3"	14
H7	4	#5	STR	8'-5"	35	V13	2	#4	STR	10'-11"	15
H8	4	#5	STR	6'-6"	27	V14	2	#4	STR	11'-7"	15
						V15	2	#4	STR	11'-10"	16
S1	6	#6	2	3'-8"	33	V16	4	#4	STR	11'-11"	32
S2	2	#6	3	7'-11"	24	V17	4	#4	STR	6'-5"	17
S3	32	#6	4	6'-6"	139	V18	2	#4	STR	6'-6"	9
						V19	4	#4	STR	6'-7"	18
T1	8	#6	STR	38'-8"	465	V20	4	#4	STR	6'-8"	18
T2	39	#6	STR	5'-8"	332	V21	2	#4	STR	7'-2"	10
T3	8	#6	1	40'-6"	487	V22	2	#4	STR	7'-10"	10
T4	39	#6	1	7'-6"	439	V23	2	#4	STR	8'-5"	11
						V24	2	#4	STR	9'-1"	12
U1	4	#4	5	9'-8"	26	V25	2	#4	STR	9'-8"	13
U2	36	#5	5	7'-6"	282	V26	2	#4	STR	10'-4"	14
U3	36	#4	5	13'-6"	325	V27	2	#4	STR	11'-0"	15
U7	6	#4	5	3'-8"	15	V28	2	#4	STR	11'-3"	15
						V29	4	#4	STR	11'-4"	30

REINFORCING STEEL	LBS 6432
CLASS A CONCRETE BREAKDOWN	
POUR 1	
(FOOTING)	CU. YDS. 23.8
POUR 2	
(CAP & BOT. OF WINGS)	CU. YDS. 39.0
POUR 3	
(BACKWALL & TOP OF WINGS)	CU. YDS. 6.5
CLASS A CONCRETE TOTAL	CU. YDS. 69.3
HP 12x53 STEEL PILES	
NO. 18	LIN. FT. 180

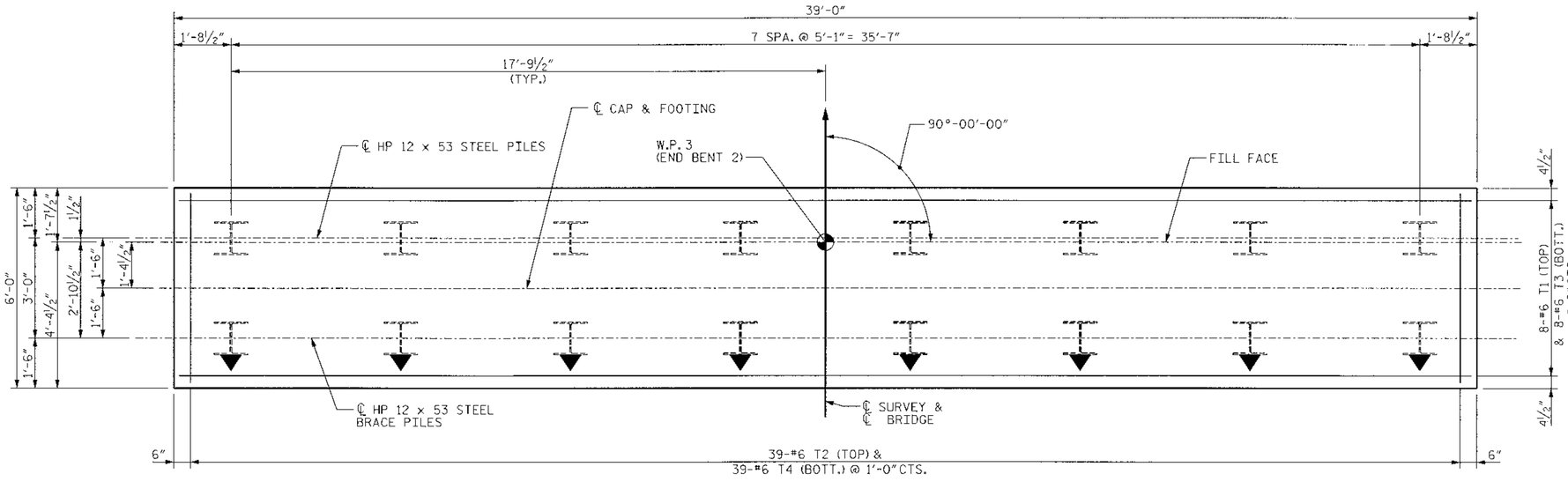

PLAN OF FOOTING - END BENT 2

▼ DENOTES DIRECTION BATTERED PILES

PROJECT NO. 33684.3.1

ALAMANCE COUNTY

STATION: 17+00.00 -L-

STATE OF NORTH CAROLINA
DEPARTMENT OF TRANSPORTATION
RALEIGH

SUBSTRUCTURE
END BENT 2
BILL OF MATERIAL

Stantec Consulting Services Inc.
Suite 300, 801 Jones Franklin Road
Raleigh, NC
27606
Tel. 919.851.6866
Fax. 919.851.7024
www.stantec.com

DRAWN BY : J. L. HENNEKES DATE : 09-08-09
CHECKED BY : T. R. DUDECK DATE : 09-08-09

SEAL 13406
ENGINEER
JOSEPH T. KELVINGTON
NORTH CAROLINA PROFESSIONAL ENGINEER

REVISIONS						SHEET NO.
NO.	BY:	DATE:	NO.	BY:	DATE:	S-17
1			3			TOTAL SHEETS
2			4			19

us:\7000?2\transportation\design\structures\drawing\B4404_17_E32_BOM.dgn 9/8/2009 3:03:07 PM USER

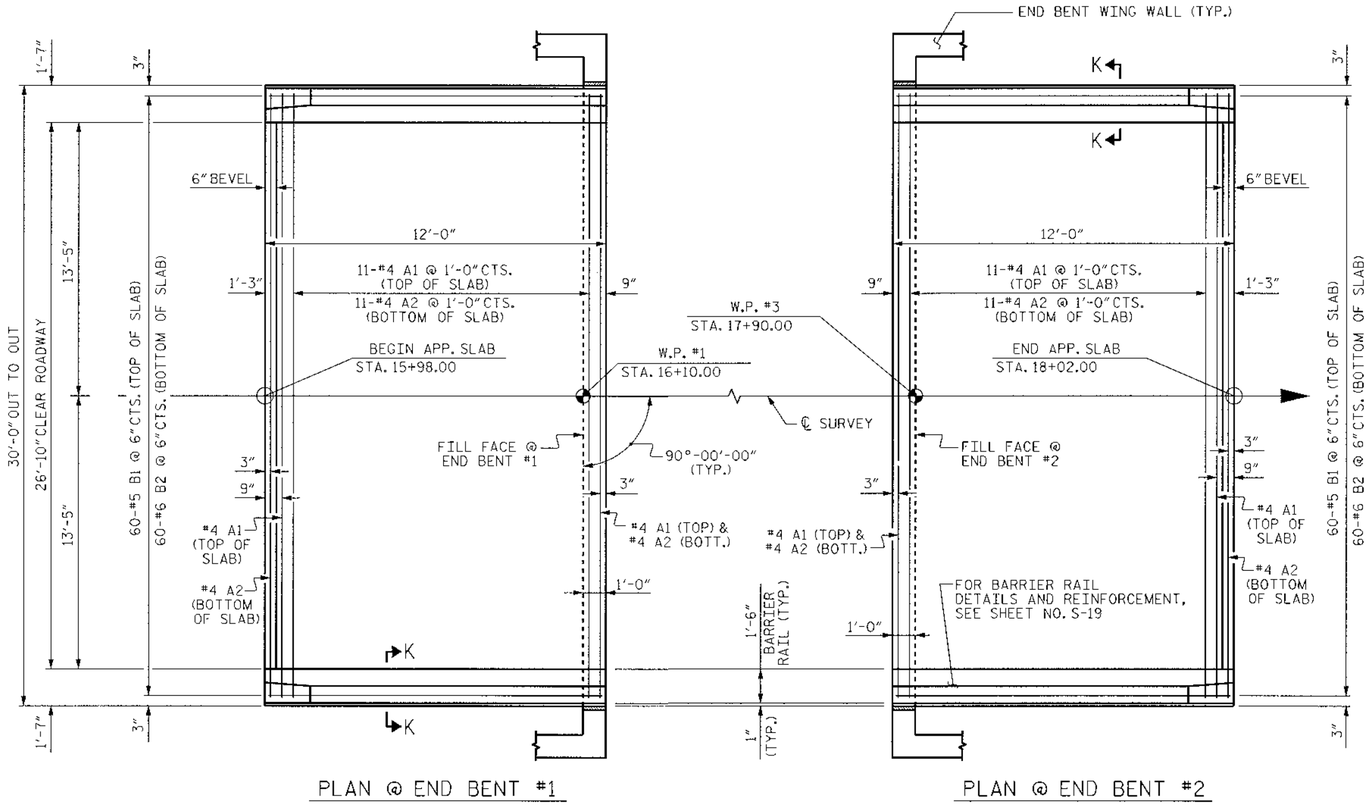

DIMENSIONS SHOWN ARE TYPICAL FOR BOTH APPROACH SLABS

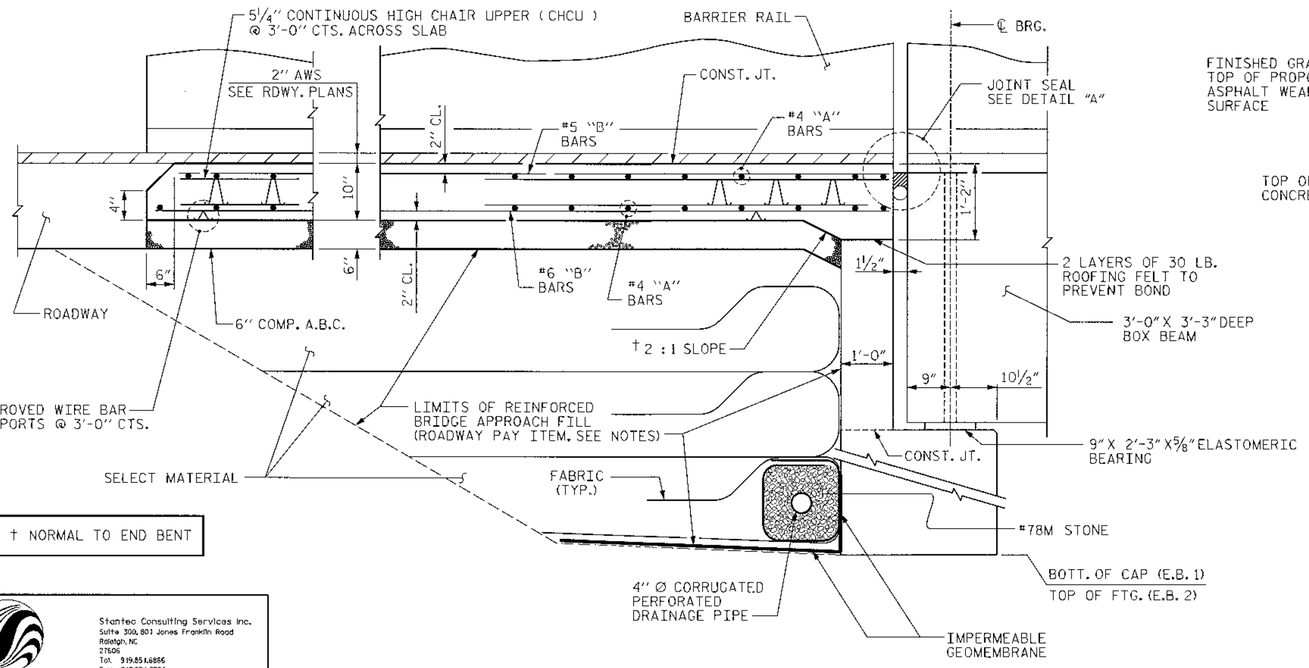

† NORMAL TO END BENT

SECTION THRU SLAB

SHOWING SECTION WITHOUT CONCRETE WEARING SURFACE

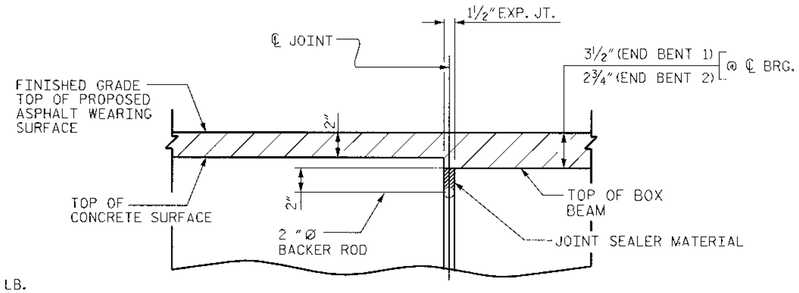

DETAIL A

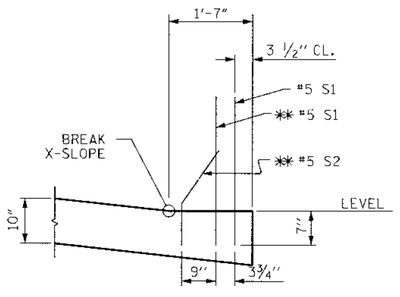

SECTION K-K

** ADHESIVELY ANCHORED

THE COST OF THE BARRIER RAIL ON THE APPROACH SLAB SHALL BE INCLUDED IN THE LUMP SUM CONTRACT PRICE BID FOR BRIDGE APPROACH SLABS.

APPROACH SLAB SHALL NOT BE CONSTRUCTED PRIOR TO SETTING BOX BEAMS.

FOR REINFORCED BRIDGE APPROACH FILL INCLUDING FABRIC, IMPERMEABLE GEOMEMBRANE, 4" Ø DRAINAGE PIPE, #78M STONE, AND SELECT MATERIAL, SEE ROADWAY PLANS.

AREA BETWEEN THE WINGWALL AND APPROACH SLAB SHALL BE GRADED TO DRAIN THE WATER AWAY FROM THE FILL FACE OF THE BRIDGE AND SHALL BE PAVED. SEE ROADWAY PLANS.

THE 6" COMP. A.B.C. SHALL BE FLUSH WITH THE ROADWAY END OF THE APPROACH SLAB AND SHALL EXTEND 1'-0" OUTSIDE OF EACH EDGE OF THE APPROACH SLAB.

THE CONTRACTOR MAY USE 4" TYPE B-25.0B ASPHALT CONCRETE BASE COURSE IN LIEU OF 6" COMP. A.B.C. IF THIS OPTION IS USED, THE BASE COURSE SHALL BE FLUSH WITH THE ROADWAY END OF THE APPROACH SLAB, AND THE WIDTH SHALL BE THE SAME AS THAT OF THE APPROACH SLAB.

THE CONTRACTOR MAY USE CLASS "A" CONCRETE BASE IN LIEU OF 6" COMP. A.B.C. IF THIS OPTION IS USE, THE CONCRETE BASE SHALL BE FLUSH WITH THE ROADWAY END OF THE APPROACH SLAB, AND THE WIDTH SHALL BE THE SAME AS THAT OF THE APPROACH SLAB. THE CONCRETE SHALL BE FINISHED TO A SMOOTH SURFACE AND A LAYER OF 30 LB ROOFING FELT SHALL BE PLACED BETWEEN THE CONCRETE BASE AND THE APPROACH SLAB TO PREVENT BOND. THE APPROACH SLAB SHALL NOT BE CAST UNTIL THE CONCRETE BASE HAS REACHED AN AGE OF THREE CURING DAYS.

BILL OF MATERIAL

FOR ONE APPROACH SLAB (2 REQ'D)

BAR	NO.	SIZE	TYPE	LENGTH	WEIGHT
* A1	13	#4	STR	29'-6"	256
A2	13	#4	STR	29'-6"	256
* B1	60	#5	STR	11'-3"	704
B2	60	#6	STR	11'-6"	1036
* B4	16	#5	STR	11'-6"	192
* S1	40	#5	STR	3'-3"	136
* S2	24	#5	1	2'-3"	56
* S3	8	#5	STR	2'-11"	24
REINFORCING STEEL.				LBS.	1292
* EPOXY COATED REINFORCING STEEL.				LBS.	1368
CLASS AA CONCRETE BREAKDOWN					
POUR 1 SLAB AND CURB				C. Y.	11.4
POUR 2 RAIL				C. Y.	2.6
CLASS AA CONCRETE				C. Y.	14.0

BAR TYPES

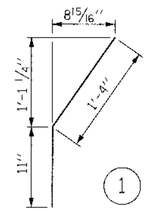

ALL BAR DIMENSIONS ARE OUT TO OUT

PROJECT NO. 33684.3.1

ALAMANCE COUNTY

STATION: 17+00.00 -L-

STATE OF NORTH CAROLINA
DEPARTMENT OF TRANSPORTATION
RALEIGH

BRIDGE APPROACH SLAB

Stantec Consulting Services Inc.
Suite 300, 801 Jones Franklin Road
Raleigh, NC
27606
Tel. 919.851.6866
Fax. 919.851.7024
www.stantec.com

DRAWN BY : B. J. ELLIOT DATE : 09-08-09
CHECKED BY : J. T. KELVINGTON DATE : 09-08-09

NORTH CAROLINA PROFESSIONAL ENGINEER SEAL 13406 JOSEPH T. KELVINGTON

REVISIONS						SHEET NO.
NO.	BY:	DATE:	NO.	BY:	DATE:	S-18
1			3			TOTAL SHEETS
2			4			19

J:\70007211-Geoenvironmental\Design\Structures\d-cw\ng\B4404_18_AS_1.dgn 9/8/2009 3:09:08 PM $USER$

NOTES

THE #5 S1 AND #5 S2 BARS SHALL BE INSTALLED, WHERE NOTED ON THE PLANS, USING AN ADHESIVE ANCHORING SYSTEM. THE YIELD LOAD FOR THE #5 S1 AND #5 S3 BARS IS 18.6 KIPS. FIELD TESTING FOR THE ADHESIVE BONDING SYSTEM IS NOT REQUIRED.

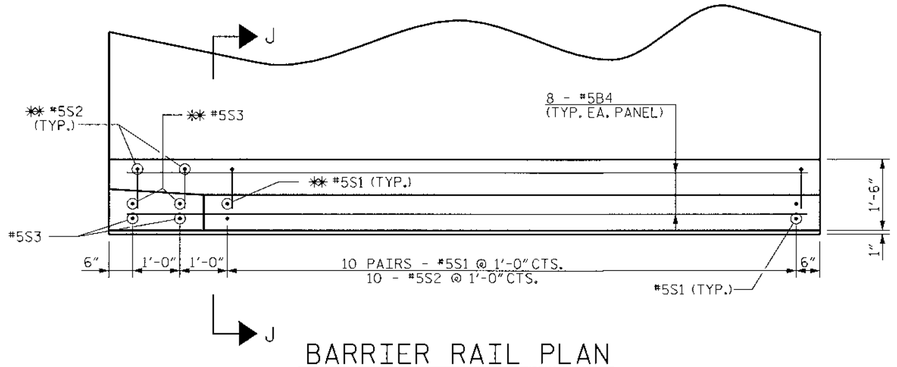

BARRIER RAIL PLAN

APPROACH SLAB 1 RIGHT SIDE SHOWN
ALL OTHERS SIMILAR

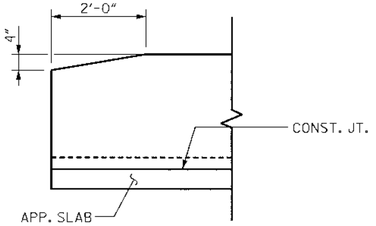

BARRIER RAIL END ELEVATION

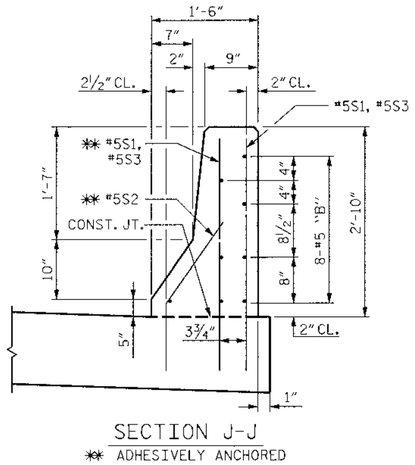

SECTION J-J

✱ ADHESIVELY ANCHORED

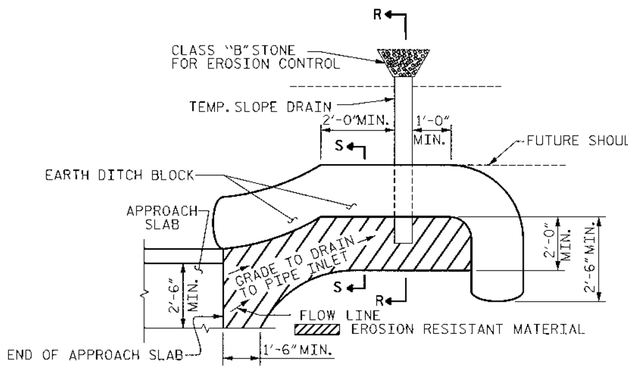

NOTE: IMMEDIATELY AFTER THE CONSTRUCTION OF THE APPROACH SLAB, THE CONTRACTOR SHALL PROVIDE TEMPORARY BERM AND SLOPE DRAIN. CONTRACTOR SHALL GRADE TO PIPE INLET AND PROVIDE EROSION RESISTANT MATERIAL AS SHOWN. THE EROSION RESISTANT MATERIAL SHALL BE EITHER 1) ASPHALT PLANT MIX, TYPE 1 OR TYPE 2, MIN. 2" DEPTH, 2) EROSION CONTROL MAT, OR 3) CONCRETE, AS DIRECTED BY THE ENGINEER. THE SLOPE DRAIN SHALL CONSIST OF A NON-PERFORATED TEMPORARY DRAINAGE PIPE, 12 INCHES IN DIAMETER.

PLAN VIEW

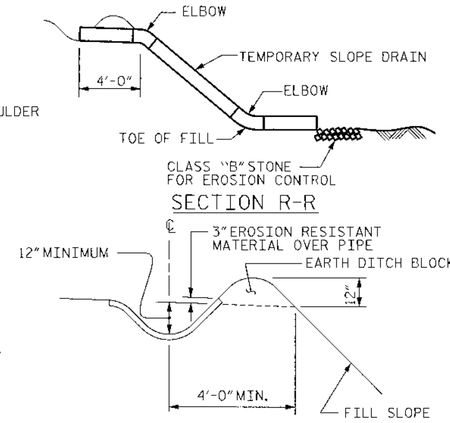

SECTION R-R

SECTION S-S

TEMPORARY BERM AND SLOPE DRAIN DETAILS

(TO BE USED WHEN SHOULDER BERM GUTTER IS REQUIRED)

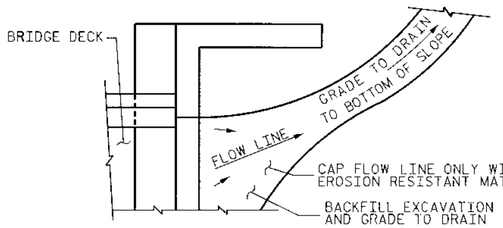

NOTE: IF THE APPROACH SLAB IS NOT CONSTRUCTED IMMEDIATELY AFTER THE BACKFILLING OF THE END BENT EXCAVATION, GRADE TO DRAIN TO THE BOTTOM OF THE SLOPE AND PROVIDE EROSION RESISTANT MATERIAL, SUCH AS FIBERGLASS ROVING OR AS DIRECTED BY THE ENGINEER TO PREVENT SOIL EROSION AND TO PROTECT THE AREA ADJACENT TO THE STRUCTURE. THE CONTRACTOR WILL BE REQUIRED TO REMOVE THESE MATERIALS PRIOR TO CONSTRUCTION OF THE APPROACH SLAB.

TEMPORARY DRAINAGE DETAIL

PROJECT NO. 33684.1.1

ALAMANCE COUNTY

STATION: 17+00.00 -L-

STATE OF NORTH CAROLINA
DEPARTMENT OF TRANSPORTATION
RALEIGH

BRIDGE APPROACH SLAB

Stantec Consulting Services Inc.
Suite 300, 801 Jones Franklin Road
Raleigh, NC
27606
Tel. 919.851.6866
Fax. 919.851.7024
www.stantec.com

DRAWN BY : B. J. ELLIOT DATE : 08-27-08
CHECKED BY : J. T. KELVINGTON DATE : 08-27-08

SEAL 13406 ENGINEER JOSEPH TERRY KELVINGTON NORTH CAROLINA PROFESSIONAL ENGINEER 7-14-09

REVISIONS						SHEET NO.
NO.	BY:	DATE:	NO.	BY:	DATE:	S-19
1			3			TOTAL SHEETS
2			4			19

L:\7000\127\transportation\design\structures\drawing\B4404_19_AS_2.dgn 7/14/2009 10:3:37 AM $USER$

STANDARD NOTES

DESIGN DATA:

SPECIFICATIONS	A.A.S.H.T.O. (CURRENT)
LIVE LOAD	SEE PLANS
IMPACT ALLOWANCE	SEE A.A.S.H.T.O.
STRESS IN EXTREME FIBER OF	
STRUCTURAL STEEL - AASHTO M270 GRADE 36 -	20,000 LBS. PER SQ. IN.
- AASHTO M270 GRADE 50W -	27,000 LBS. PER SQ. IN.
- AASHTO M270 GRADE 50 -	27,000 LBS. PER SQ. IN.
REINFORCING STEEL IN TENSION	
GRADE 60 - -	24,000 LBS. PER SQ. IN.
CONCRETE IN COMPRESSION	1,200 LBS. PER SQ. IN.
CONCRETE IN SHEAR	SEE A.A.S.H.T.O.
STRUCTURAL TIMBER - TREATED OR	
UNTREATED - EXTREME FIBER STRESS	1,800 LBS. PER SQ. IN.
COMPRESSION PERPENDICULAR TO GRAIN OF TIMBER	375 LBS. PER SQ. IN.
EQUIVALENT FLUID PRESSURE OF EARTH	30 LBS. PER CU. FT. (MINIMUM)

MATERIAL AND WORKMANSHIP:

EXCEPT AS MAY OTHERWISE BE SPECIFIED ON PLANS OR IN THE SPECIAL PROVISIONS, ALL MATERIAL AND WORKMANSHIP SHALL BE IN ACCORDANCE WITH THE 2006 "STANDARD SPECIFICATIONS FOR ROADS AND STRUCTURES" OF THE N. C. DEPARTMENT OF TRANSPORTATION.

STEEL SHEET PILING FOR PERMANENT OR TEMPORARY APPLICATIONS SHALL BE HOT ROLLED.

CONCRETE:

UNLESS OTHERWISE REQUIRED ON PLANS, CLASS A CONCRETE SHALL BE USED FOR ALL PORTIONS OF ALL STRUCTURES WITH THE EXCEPTION THAT: CLASS AA CONCRETE SHALL BE USED IN BRIDGE SUPERSTRUCTURES, ABUTMENT BACKWALLS, AND APPROACH SLABS; AND CLASS B CONCRETE SHALL BE USED FOR SLOPE PROTECTION AND RIP RAP.

CONCRETE CHAMFERS:

UNLESS OTHERWISE NOTED ON THE PLANS, ALL EXPOSED CORNERS ON STRUCTURES SHALL BE CHAMFERED 3/4" WITH THE FOLLOWING EXCEPTIONS: TOP CORNERS OF CURBS MAY BE ROUNDED TO 1-1/2" RADIUS WHICH IS BUILT INTO CURB FORMS; CORNERS OF TRANSVERSE FLOOR EXPANSION JOINTS SHALL BE ROUNDED WITH A 1/4" FINISHING TOOL UNLESS OTHERWISE REQUIRED ON PLANS; AND CORNERS OF EXPANSION JOINTS IN THE ROADWAY FACES AND TOPS OF CURBS AND SIDEWALKS SHALL BE ROUNDED TO A 1/4" RADIUS WITH A FINISHING STONE OR TOOL UNLESS OTHERWISE REQUIRED ON PLANS.

DOWELS:

DOWELS WHEN INDICATED ON PLANS AS FOR CULVERT EXTENSIONS, SHALL BE EMBEDDED AT LEAST 12" INTO THE OLD CONCRETE AND GROUTED INTO PLACE WITH 1:2 CEMENT MORTAR.

ALLOWANCE FOR DEAD LOAD DEFLECTION, SETTLEMENT, ETC. IN CASTING SUPERSTRUCTURES:

BRIDGES SHALL BE BUILT ON THE GRADE OR VERTICAL CURVE SHOWN ON PLANS. SLABS, CURBS AND PARAPETS SHALL CONFORM TO THE GRADE OR CURVE.

ALL DIMENSIONS WHICH ARE GIVEN IN SECTION AND ARE AFFECTED BY DEAD LOAD DEFLECTIONS ARE DIMENSIONS AT CENTER LINE OF BEARING UNLESS OTHERWISE NOTED ON PLANS. IN SETTING FORMS FOR STEEL BEAM BRIDGES AND PRESTRESSED CONCRETE GIRDER BRIDGES, ADJUSTMENTS SHALL BE MADE DUE TO THE DEAD LOAD DEFLECTIONS FOR THE ELEVATIONS SHOWN. WHERE BLOCKS ARE SHOWN OVER BEAMS FOR BUILDING UP TO THE SLAB, THE VERTICAL DIMENSIONS OF THE BLOCKS SHALL BE ADJUSTED BETWEEN BEARINGS TO COMPENSATE FOR DEAD LOAD DEFLECTIONS, VERTICAL CURVE ORDINATE, AND ACTUAL BEAM CAMBER. WHERE BOTTOM OF SLAB IS IN LINE WITH BOTTOM OF TOP FLANGES, DEPTH OF SLAB BETWEEN BEARINGS SHALL BE ADJUSTED TO COMPENSATE FOR DEAD LOAD DEFLECTION, VERTICAL CURVE ORDINATE, AND ACTUAL BEAM CAMBER.

IN SETTING FALSEWORK AND FORMS FOR REINFORCED CONCRETE SPANS, AN ALLOWANCE SHALL BE MADE FOR DEAD LOAD DEFLECTIONS, SETTLEMENT OF FALSEWORK, AND PERMANENT CAMBER WHICH SHALL BE PROVIDED FOR IN ADDITION TO THE ELEVATIONS SHOWN. AFTER REMOVAL OF THE FALSEWORK, THE FINISHED STRUCTURES SHALL CONFORM TO THE PROFILE AND ELEVATIONS SHOWN ON THE PLANS AND CONSTRUCTION ELEVATIONS FURNISHED BY THE ENGINEER.

DETAILED DRAWINGS FOR FALSEWORK OR FORMS FOR BRIDGE SUPERSTRUCTURE AND ANY STRUCTURE OR PARTS OF A STRUCTURE AS NOTED ON THE PLANS SHALL BE SUBMITTED TO THE ENGINEER FOR APPROVAL BEFORE CONSTRUCTION OF THE FALSEWORK OR FORMS IS STARTED.

REINFORCING STEEL:

ALL REINFORCING STEEL SHALL BE DEFORMED. DIMENSIONS RELATIVE TO PLACEMENT OF REINFORCING ARE TO CENTERS OF BARS UNLESS OTHERWISE INDICATED IN THE PLANS. DIMENSIONS ON BAR DETAILS ARE TO CENTERS OF BARS OR ARE OUT TO OUT AS INDICATED ON PLANS.

WIRE BAR SUPPORTS SHALL BE PROVIDED FOR REINFORCING STEEL WHERE INDICATED ON THE PLANS. WHEN BAR SUPPORT PIECES ARE PLACED IN CONTINUOUS LINES, THEY SHALL BE SO PLACED THAT THE ENDS OF THE SUPPORTING WIRES SHALL BE LAPPED TO LOCK LEGS ON ADJOINING PIECES.

STRUCTURAL STEEL:

AT THE CONTRACTOR'S OPTION, HE MAY SUBSTITUTE 7/8" Ø SHEAR STUDS FOR THE 3/4" Ø STUDS SPECIFIED ON THE PLANS. THIS SUBSTITUTION SHALL BE MADE AT THE RATE OF 3 - 7/8" Ø STUDS FOR 4 - 3/4" Ø STUDS, AND STUD SPACING CHANGES SHALL BE MADE AS NECESSARY TO PROVIDE THE SAME EQUIVALENT NUMBER OF 7/8" Ø STUDS ALONG THE BEAM AS SHOWN FOR 3/4" Ø STUDS BASED ON THE RATIO OF 3 - 7/8" Ø STUDS FOR 4 - 3/4" Ø STUDS. STUDS OF THE LENGTH SPECIFIED ON THE PLANS MUST BE PROVIDED. THE MAXIMUM SPACING SHALL BE 2'-0".

EXCEPT AT THE INTERIOR SUPPORTS OF CONTINUOUS BEAMS WHERE THE COVER PLATE IS IN CONTACT WITH BEARING PLATE, THE CONTRACTOR MAY, AT HIS OPTION, SUBSTITUTE FOR THE COVER PLATES DESIGNATED ON THE PLANS COVER PLATES OF THE EQUIVALENT AREA PROVIDED THESE PLATES ARE AT LEAST 5/16" IN THICKNESS AND DO NOT EXCEED A WIDTH EQUAL TO THE FLANGE WIDTH LESS 2" OR A THICKNESS EQUAL TO 2 TIMES THE FLANGE THICKNESS. THE SIZE OF FILLET WELDS SHALL CONFORM TO THE REQUIREMENTS OF THE CURRENT ANSI/AASHTO/AWS "BRIDGE WELDING CODE". ELECTROSLAG WELDING WILL NOT BE PERMITTED.

WITH THE SOLE EXCEPTION OF EDGES AT SURFACES WHICH BEAR ON OTHER SURFACES, ALL SHARP EDGES AND ENDS OF SHAPES AND PLATES SHALL BE SLIGHTLY ROUNDED BY SUITABLE MEANS TO A RADIUS OF APPROXIMATELY 1/16 INCH OR EQUIVALENT FLAT SURFACE AT A SUITABLE ANGLE PRIOR TO PAINTING, GALVANIZING, OR METALLIZING.

HANDRAILS AND POSTS:

METAL STANDARDS AND FACES OF THE CONCRETE END POSTS FOR THE METAL RAIL SHALL BE SET NORMAL TO THE GRADE OF THE CURB, UNLESS OTHERWISE SHOWN ON PLANS. THE METAL RAIL AND TOPS OF CONCRETE POSTS USED WITH THE ALUMINUM RAIL SHALL BE BUILT PARALLEL TO THE GRADE OF THE CURB.

METAL HANDRAILS SHALL BE IN ACCORDANCE WITH THE PLANS. RAILS SHALL BE AS MANUFACTURED FOR BRIDGE RAILING. CASTINGS SHALL BE OF A UNIFORM APPEARANCE. FINS AND OTHER DEFORMATIONS RESULTING FROM CASTING OR OTHERWISE SHALL BE REMOVED IN A MANNER SO THAT A UNIFORM COLORING OF THE COMPLETED CASTING SHALL BE OBTAINED. CASTINGS WITH DISCOLORATIONS OR OF NON-UNIFORM COLORING WILL NOT BE ACCEPTED. CERTIFIED MILL REPORTS ARE REQUIRED FOR METAL RAILS AND POSTS.

SPECIAL NOTES:

GENERALLY, IN CASE OF DISCREPANCY, THIS STANDARD SHEET OF NOTES SHALL GOVERN OVER THE SPECIFICATIONS, BUT THE REMAINDER OF THE PLANS SHALL GOVERN OVER NOTES HEREON, AND SPECIAL PROVISIONS SHALL GOVERN OVER ALL. SEE SPECIFICATIONS ARTICLE 105-4.

ENGLISH

JANUARY, 1990

STD. NO. SN

REV. 6-16-95 EEM W/ RGW REV. 5-7-03 RWW W/ JTE
REV. 8-16-99 RWW W/ LES REV. 5-1-06 TLA W/ GM

9/8/2009
I:\17060712\transportation\design\Structures\Drawing\B-4404_SN.dgn
$$$$USERNAME$$$$

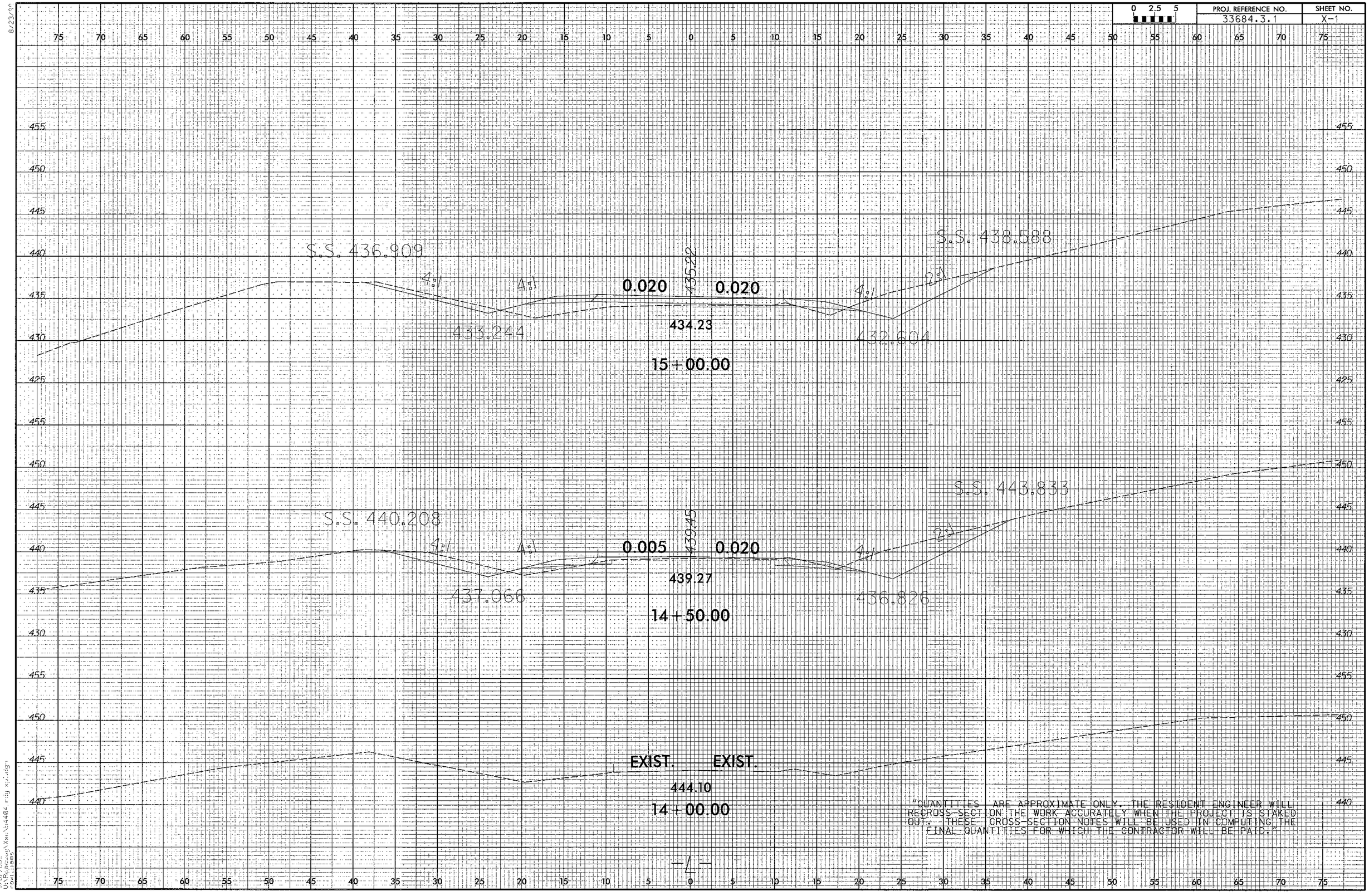

"QUANTITIES ARE APPROXIMATE ONLY. THE RESIDENT ENGINEER WILL RECROSS-SECTION THE WORK ACCURATELY WHEN THE PROJECT IS STAKED OUT. THESE CROSS-SECTION NOTES WILL BE USED IN COMPUTING THE FINAL QUANTITIES FOR WHICH THE CONTRACTOR WILL BE PAID."

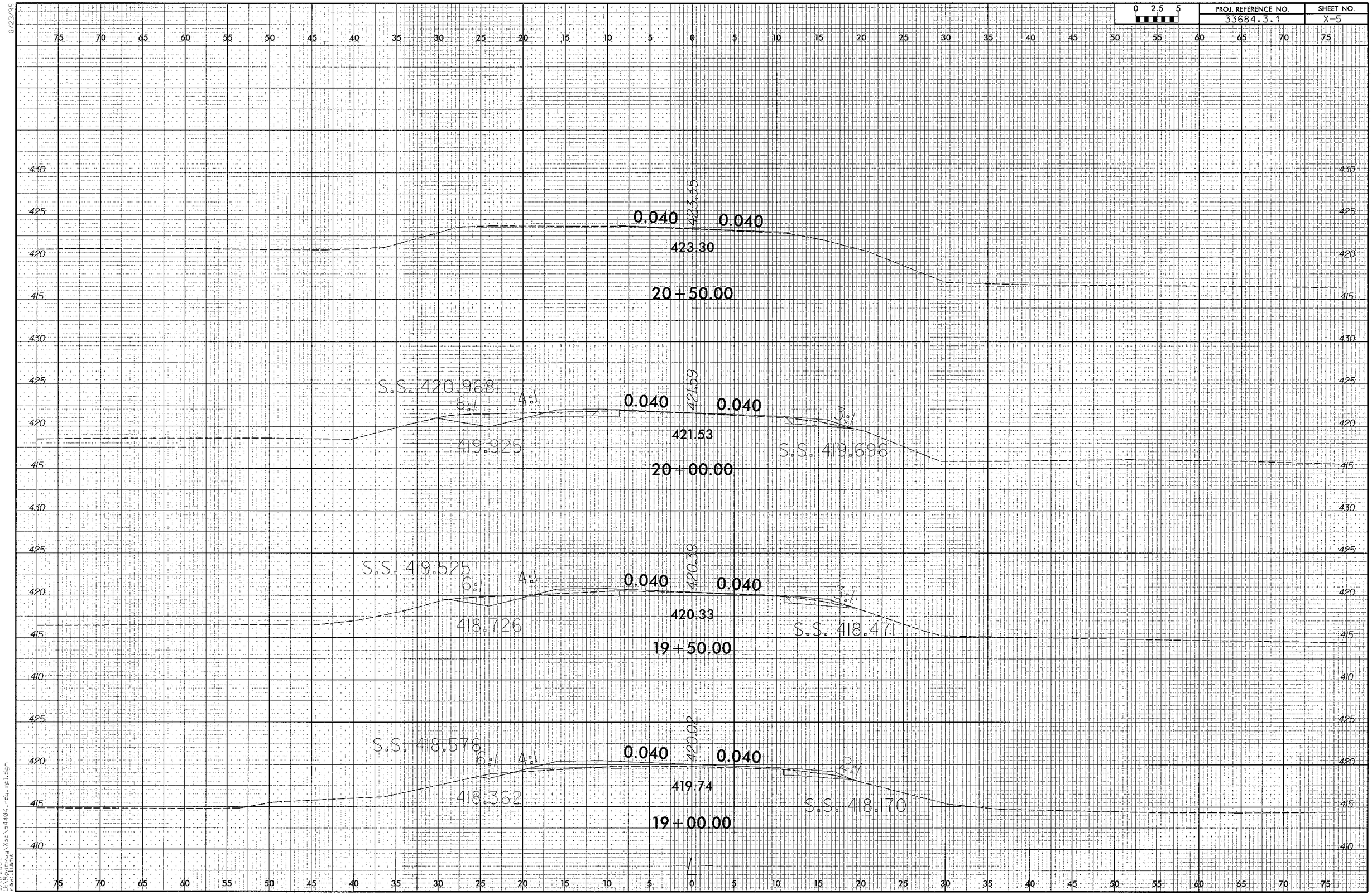

0 2.5 5
PROJ. REFERENCE NO.
33684.3.1
SHEET NO.
X-5
0.040
423.35
0.040
423.30
20+50.00
S.S. 420.968
6:1
4:1
0.040
421.59
0.040
3:1
421.53
419.925
S.S. 419.696
20+00.00
S.S. 419.525
6:1
4:1
0.040
420.39
0.040
3:1
420.33
418.726
S.S. 418.47
19+50.00
S.S. 418.576
6:1
4:1
0.040
420.02
0.040
2:1
419.74
418.362
S.S. 418.170
19+00.00

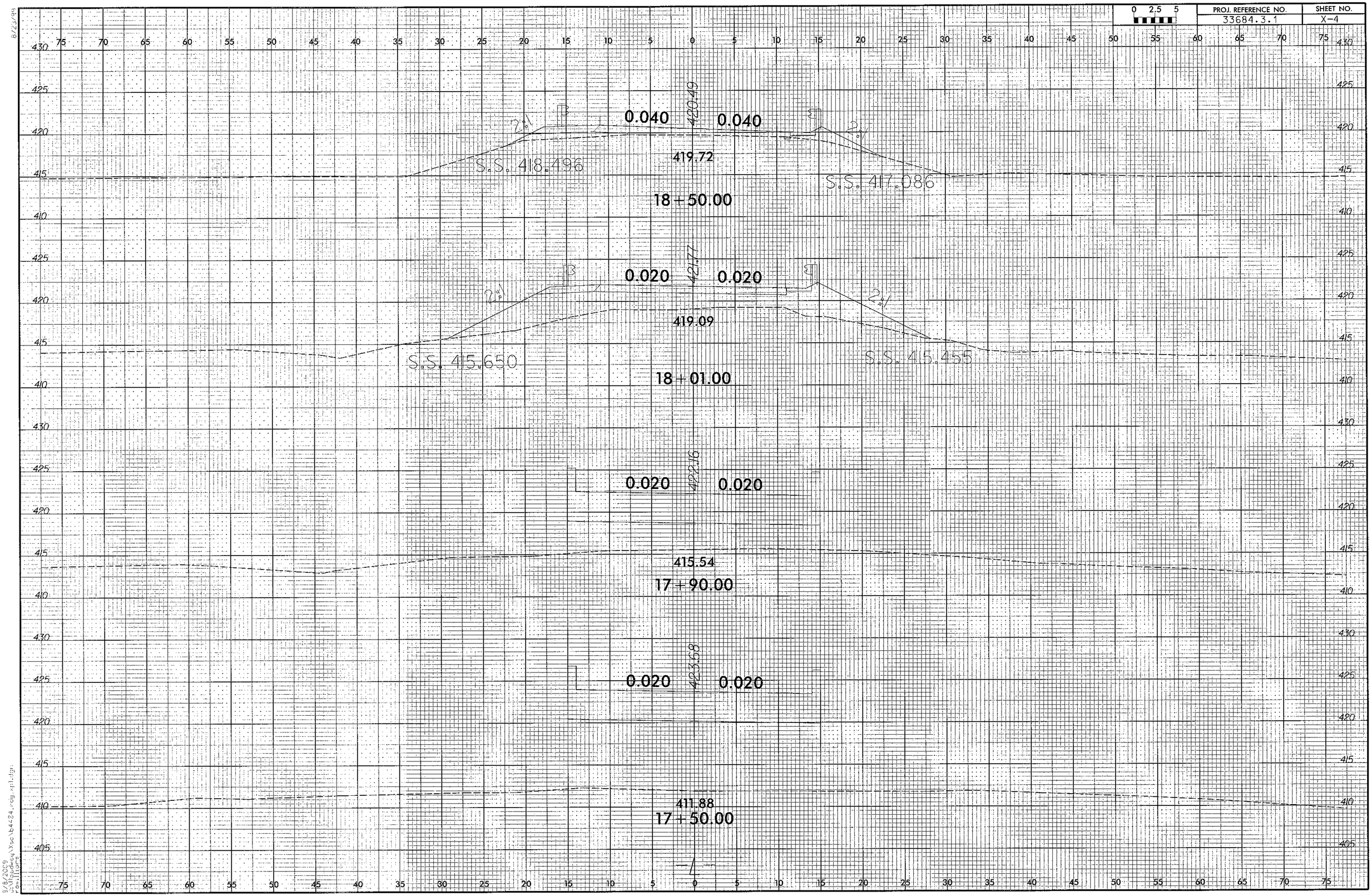

0 2.5 5
PROJ. REFERENCE NO.
33684.3.1
SHEET NO.
X-4
0.040
420.49
0.040
2:1
2:1
419.72
S.S. 418.496
S.S. 417.086
18+50.00
0.020
421.77
0.020
2:1
2:1
419.09
S.S. 415.650
S.S. 415.455
18+01.00
0.020
422.16
0.020
415.54
17+90.00
0.020
423.68
0.020
411.88
17+50.00

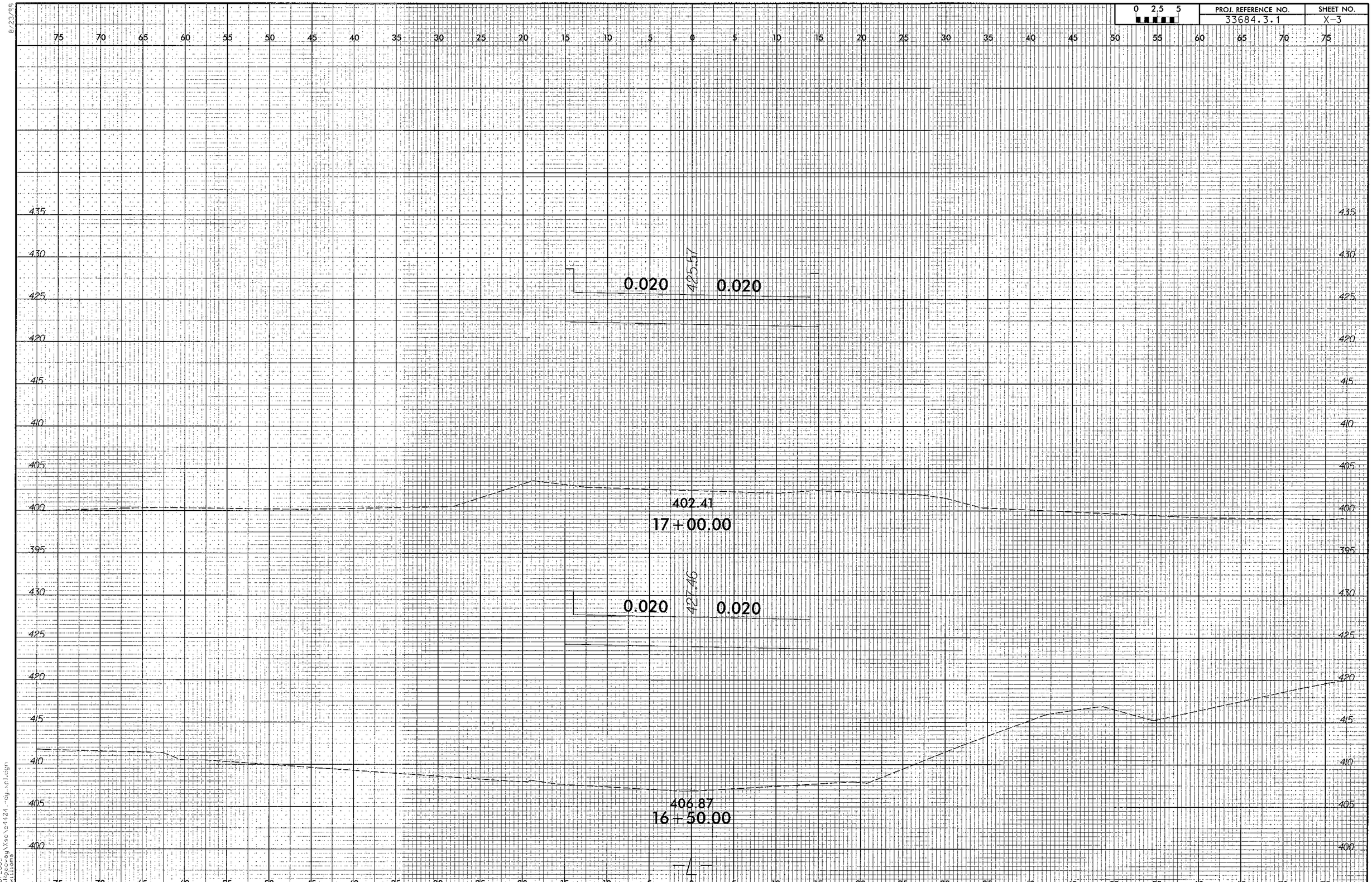

0 2.5 5
PROJ. REFERENCE NO.
33684.3.1
SHEET NO.
X-3
0.020
425.57
0.020
402.41
17+00.00
0.020
427.46
0.020
406.87
16+50.00

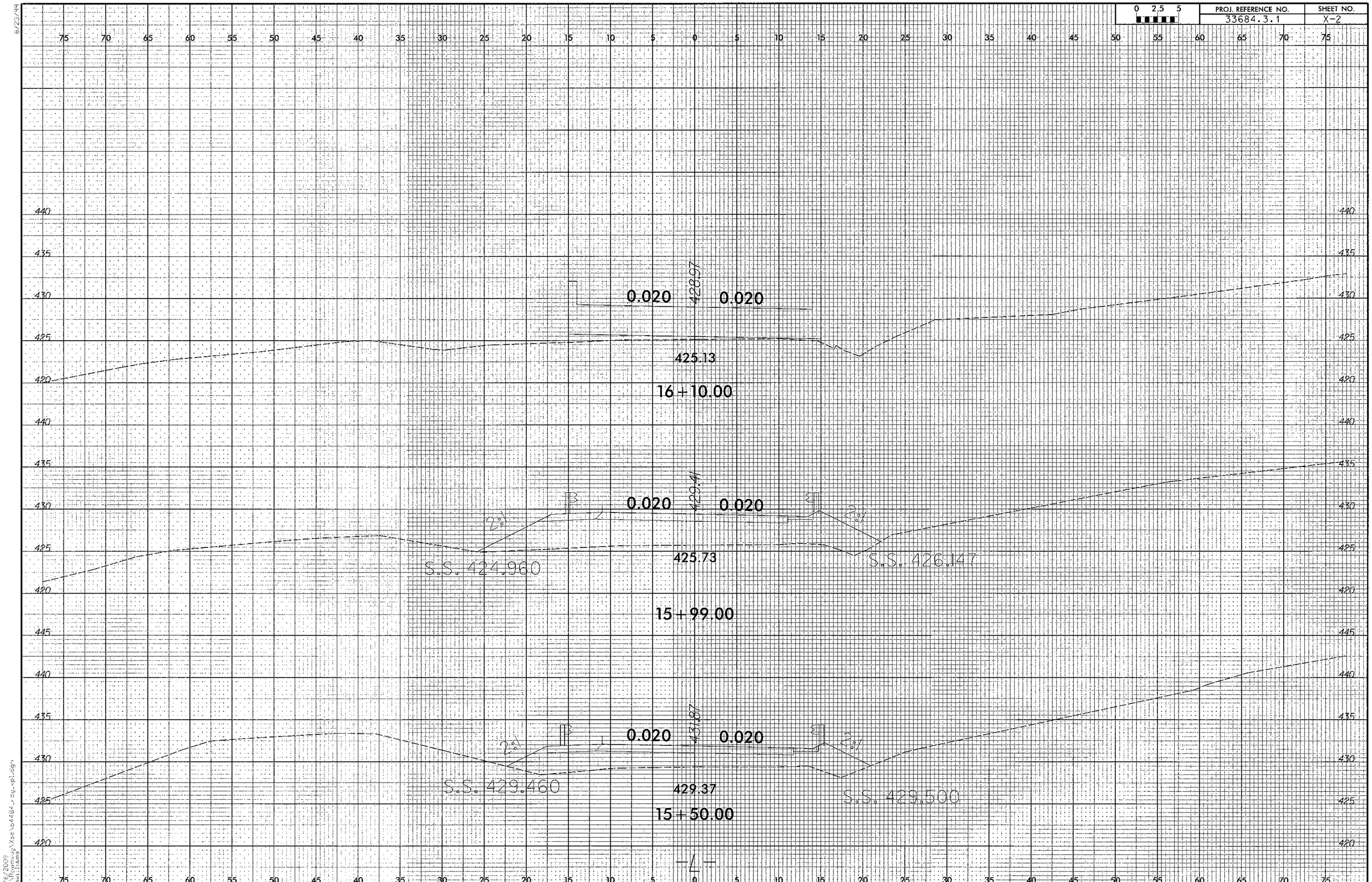

0 2.5 5
PROJ. REFERENCE NO.
33684.3.1
SHEET NO.
X-2
0.020
428.97
0.020
425.13
16+10.00
0.020
429.41
0.020
425.73
S.S. 424.960
S.S. 426.147
15+99.00
0.020
431.87
0.020
429.37
S.S. 429.460
S.S. 429.500
15+50.00
-L-

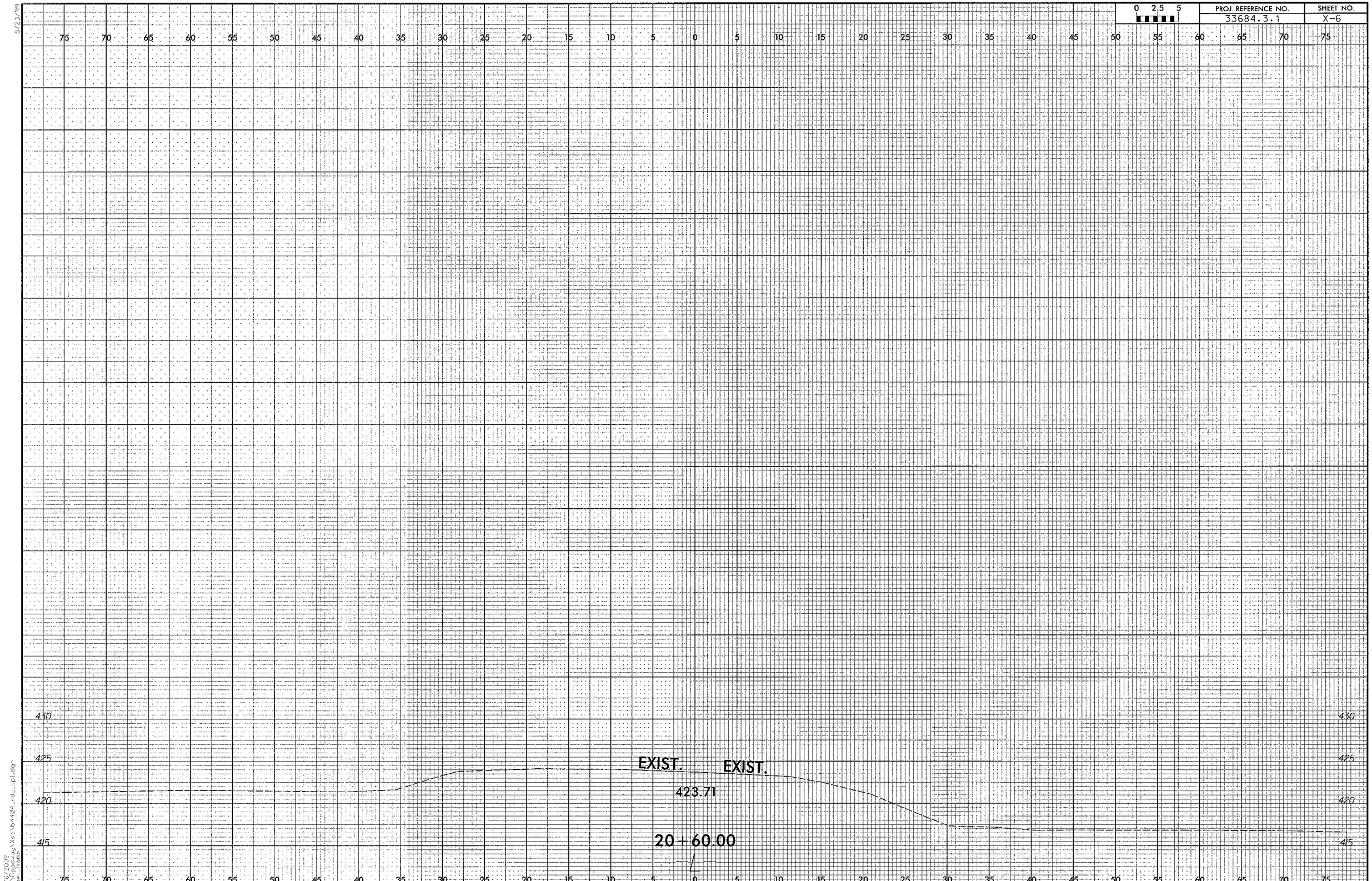

0 2.5 5
PROJ. REFERENCE NO.
33684.3.1
SHEET NO.
X-6
75 70 65 60 55 50 45 40 35 30 25 20 15 10 5 0 5 10 15 20 25 30 35 40 45 50 55 60 65 70 75
430
425
420
415
EXIST.
EXIST.
423.71
20+60.00

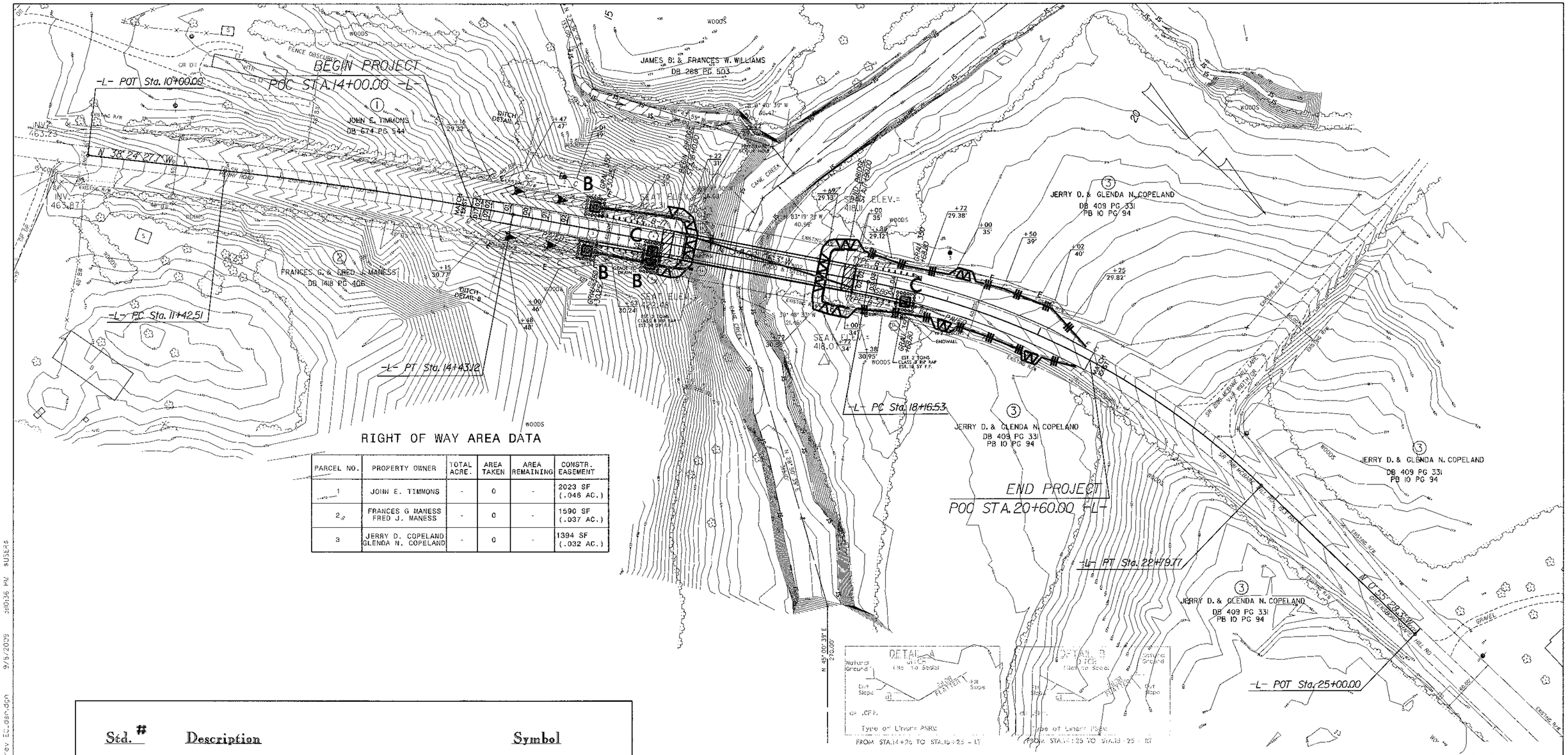

RIGHT OF WAY AREA DATA

PARCEL NO.	PROPERTY OWNER	TOTAL ACRE.	AREA TAKEN	AREA REMAINING	CONSTR. EASEMENT
1	JOHN E. TIMMONS	-	0	-	2023 SF (.046 AC.)
2	FRANCES G MANESS FRED J. MANESS	-	0	-	1590 SF (.037 AC.)
3	JERRY D. COPELAND GLENDA N. COPELAND	-	0	-	1394 SF (.032 AC.)

Std. #	Description	Symbol
1605.01	Temporary Silt Fence	
1606.01	Special Sediment Control Fence	
1630.06	Special Stilling Basin	
1632.02	Rock Inlet Sediment Trap Type B	
1632.03	Rock Inlet Sediment Trap Type C	
	Temporary Rock Silt Check Type B	

ROADSIDE ENVIRONMENTAL UNIT
DEPARTMENT OF TRANSPORTATION
DIVISION OF HIGHWAYS
RALEIGH, N.C.

2006 STANDARD SPECIFICATIONS

NOTES: ANY DEVIATION FROM OPTIONS GIVEN WILL REQUIRE PRIOR APPROVAL BY ENGINEER.

ADDITIONAL EROSION CONTROL DEVICES MAY NEED TO BE INSTALLED AS DIRECTED BY THE ENGINEER.

PROJECT NO. 33684.1.1

ALAMANCE COUNTY

STATION: 17+00.00 -L-

STATE OF NORTH CAROLINA
DEPARTMENT OF TRANSPORTATION
RALEIGH

BRIDGE NO. 102 ON SR 2181
OVER SOUTH FORK CANE CREEK

REVISIONS						SHEET NO.
NO.	BY:	DATE:	NO.	BY:	DATE:	EC-1
1			3			TOTAL SHEETS
2			4			6

EROSION CONTROL PLAN

J:\Roadway\03960_Revised Erosion Control from NCDOT\B4402_rev EC_sm.dgn 9/9/2009 2:10:36 PM susan

SPECIAL STILLING BASIN:

Description

This work consists of furnishing, placing, and removing special stilling basin(s) as directed. The special stilling basin shall be used to filter pumped woter during construction of drilled piers, footing excavation, and/or culvert construction. The special stilling basin shall alsa be used for sediment storage at the outlet of temporary slope drain pipe(s).

Materials

Refer to Division 10

Item	Section
Filter Fabric for Drainage, Type 2	1056
Sediment Control Stone	1005

The filter fabric and sediment control stone shall be clean and shall not cantain debris.

The special stilling basin shall be a water permeable fabric bag that traps sand, silt, and fines as sediment-laden water is pumped into it, or as runoff flows into it through the temparary slope drain pipe(s).

The special stilling basin shall be a bag constructed to a minimum size of 10* x 15* made from a nonwoven fabric. It shall have a sewn-in 8" (maximum) spout far receiving pump discharge. The bag seams shall be sewn with a double needle machine using a high strength thread. The seams shall have a minimum wide width strength as follows:

Test Method	Minimum Specifications
ASTM D-4884	60 lb/in

The fabric used to construct the bag shall be stabilized to provide resistance to ultra-vialet degradation and meet the following specifications for flaw rates, strength, and permeability:

Property	Test Method	Minimum Specifications
Weight	ASTM D-3776	8.0 oz/yd
Grab tensile	ASTM D-4632	200.0 lb
Puncture	ASTM D-4833	130.0 lb
Flow rate	ASTM D-4491	80.0 gal/min/sf
Permittivity	ASTM D-4491	1.2 1/sec
UV Resistance	ASTM D-4355	70.0%

Construction Methads

The Contractor shall install the special stilling basin(s), filter fabric, and stone in accordance with Standard Drawing No. 1630.06 and at locations on the plans and as directed.

The special stilling basin(s) shall be constructed such that it is portable and can be used adjacent to each drilled pier, footing, and/or culvert. Temporary slope drain pipe(s) shall be attached to the special stilling basin(s) so that the runoff in the slope drain pipe(s) flows directly into the special stilling basin(s). The special stilling basin(s) shall be placed so the incoming water flows into and through the bag withaut causing erosion. The neck or spout af the bag shall be tied off tightly to stop the water fram flowing out of the bag without going through the walls. If applicable, the neck or spout af the silt bag shall be cut to allow for a slope drain pipe to be inserted inta the speciol stilling basin, and tied off tightly to stop the water from flowing out of the bag.

The special stilling basin(s) shall be replaced and disposed of when it is * full of sediment or when it is impractical for the bag to filter the sediment out at a reasonable flow rate. Prior appraval from the Engineer shall be received before removal and replacement.

The Contractor shall be responsible for providing a sufficient quantity of bags to contain silt from pumped effluent during construction of drilled piers, footing excavation, and/or culvert construction. A sufficient quantity of special stilling basins shall be provided to contain sediment from temporary slope drain runoff.

The quantity of sediment control stone, filter fabric for drainage, and special stilling basin(s) as measured above will be paid for at contract price for "Lump Sum for Erosion Control". Such price and payment will be full compensation for all work covered by this provision, including but not limted to, furnishing all materials, placing and maintaining the special stilling basin(s), and removal and disposal of silt accumulations and bag.

STATE OF NORTH CAROLINA
DEPT. OF TRANSPORTATION
DIVISION OF HIGHWAYS
RALEIGH, N.C.
7-06

ENGLISH STANDARD DRAWING FOR
SPECIAL STILLING BASIN

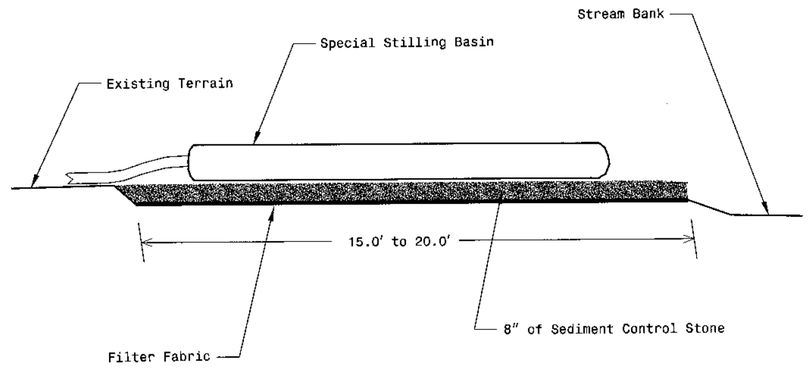

Note: Provide Stabilized Outlet to Streambank
Not To Scale

SHEET 1 OF 1
1630.06

STATE OF NORTH CAROLINA
DEPT. OF TRANSPORTATION
DIVISION OF HIGHWAYS
RALEIGH, N.C.
7-06

ENGLISH STANDARD DRAWING FOR
SPECIAL STILLING BASIN

SHEET 1 OF 1
1630.06

ROADSIDE ENVIRONMENTAL UNIT
DEPARTMENT OF TRANSPORTATION
DIVISION OF HIGHWAYS
RALEIGH, N.C.

2006 STANDARD SPECIFICATIONS

NOTES: ANY DEVIATION FROM OPTIONS GIVEN WILL REQUIRE PRIOR APPROVAL BY ENGINEER.

ADDITIONAL EROSION CONTROL DEVICES MAY NEED TO BE INSTALLED AS DIRECTED BY THE ENGINEER.

PROJECT NO. 33684.1.1

ALAMANCE COUNTY

STATION: 17+00.00 -L-

STATE OF NORTH CAROLINA
DEPARTMENT OF TRANSPORTATION
RALEIGH

BRIDGE NO. 102 ON SR 2181
OVER SOUTH FORK CANE CREEK

REVISIONS						SHEET NO.
NO.	BY:	DATE:	NO.	BY:	DATE:	EC-5
1			3			TOTAL SHEETS
2			4			6

EROSION CONTROL PLAN

N:\roadway\design\Revised erosion control from NC107_B4304.rev if.dgn 5/8/2009 3:04:21 PM s.sears

Special Sediment Control Fence:

Description:

The work covered by this section consists of the construction, maintenance, and removal of special sediment control fence. Place special sediment control fence as shown on the plans or as directed by the Engineer.

Materials:

(A) Posts:

Steel posts shall be at least 5 feet in length, approximately 1 3/8 inches wide measured parallel to the fence, and have a minimum weight of 1.25 lb/ft of length. The post shall be equipped with an anchor plate having a minimum area of 14.0 square inches, and shall have a means of retaining wire in the desired position without displacement.

(B) 1/4 inch Hardware Cloth:

Hardware cloth shall have 1/4 inch openings constructed from #24 gauge wire. Install hardware cloth according to the detail shown on the plans.

(C) Sediment Control Stone:

Sediment control stone shall meet the requirements of Section 1005. Install stone according to the detail shown on the plans.

Maintenance and Removal:

The Contractor shall maintoin the special sediment control fence until the project is accepted or until the fence is removed, and shall remove and dispose of silt accumulations at the fence when so directed by the Engineer in accordance with Section 1630.

The quantity of posts, sediment control stone and hardware cloth as measured above will be paid for at the contract price for "Lump Sum for Erosion Control". Such price and payment will be full compensation for all work covered by this provision, including but not limited to, furnishing all materials, installation, and removal and disposal of silt accumulations and materials.

STATE OF NORTH CAROLINA
DEPT. OF TRANSPORTATION
DIVISION OF HIGHWAYS
RALEIGH, N.C.

ENGLISH STANDARD DRAWING FOR
SPECIAL SEDIMENT CONTROL FENCE

SHEET 1 OF 1
1606.01

GENERAL NOTES:

USE NO. 5 OR NO. 57 STONE FOR SEDIMENT CONTROL STONE.

USE HARDWARE CLOTH 24 GAUGE WIRE MESH WITH 1/4 INCH MESH OPENINGS.

INSTALL 5 FT. SELF FASTENER ANGLE STEEL POST 2 FT. DEEP MINIMUM.

SPACE POST A MAXIMUM OF 3 FT.

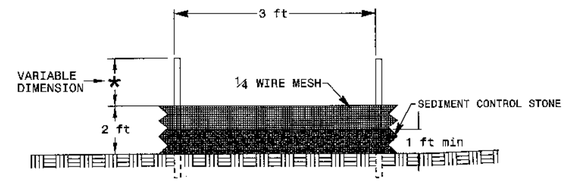

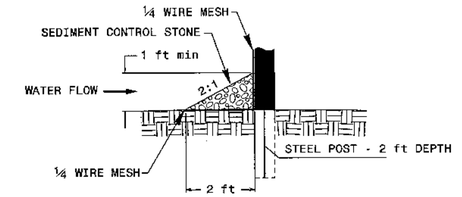

STATE OF NORTH CAROLINA
DEPT. OF TRANSPORTATION
DIVISION OF HIGHWAYS
RALEIGH, N.C.

ENGLISH STANDARD DRAWING FOR
SPECIAL SEDIMENT CONTROL FENCE

SHEET 1 OF 1
1606.01

ROADSIDE ENVIRONMENTAL UNIT
DEPARTMENT OF TRANSPORTATION
DIVISION OF HIGHWAYS
RALEIGH, N.C.

2006 STANDARD SPECIFICATIONS

NOTES: ANY DEVIATION FROM OPTIONS GIVEN WILL REQUIRE PRIOR APPROVAL BY ENGINEER.

ADDITIONAL EROSION CONTROL DEVICES MAY NEED TO BE INSTALLED AS DIRECTED BY THE ENGINEER.

PROJECT NO. 33684.1.1

ALAMANCE COUNTY

STATION: 17+00.00 -L-

STATE OF NORTH CAROLINA
DEPARTMENT OF TRANSPORTATION
RALEIGH

BRIDGE NO. 102 ON SR 2181
OVER SOUTH FORK CANE CREEK

REVISIONS						SHEET NO.
NO.	BY:	DATE:	NO.	BY:	DATE:	EC-4
1			3			TOTAL SHEETS
2			4			6

EROSION CONTROL PLAN

I:\Roadway\33684_Revised Erosion Control\roll\33684_rev EC_ESM.dgn 9/8/2009 3:04:00 PM BUSH

STATE OF NORTH CAROLINA
DEPT. OF TRANSPORTATION
DIVISION OF HIGHWAYS
RALEIGH, N.C.

7-06

ENGLISH STANDARD DRAWING FOR
ROCK INLET SEDIMENT TRAP TYPE 'B'

SHEET 1 OF 1
1632.02

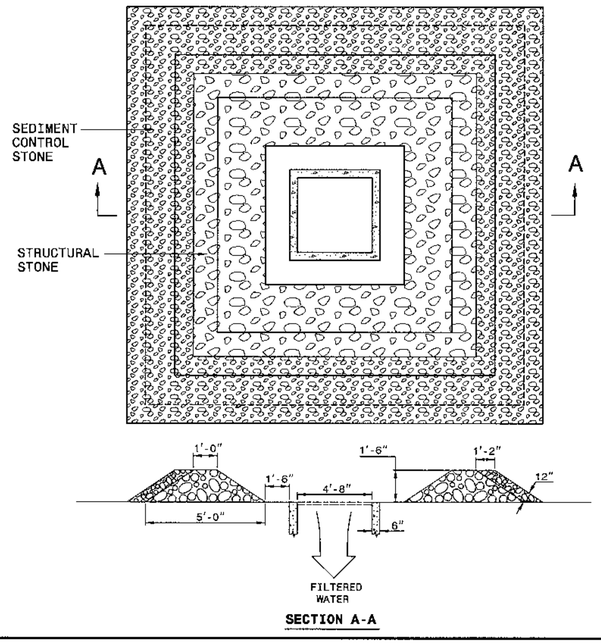

SECTION A-A

NOTE:
USE CLASS 'A' STONE FOR STRUCTURAL STONE.
USE NO. 5 OR NO. 57 STONE FOR SEDIMENT CONTROL.
DIMENSIONS SHOWN ARE MINIMUM ACCEPTABLE UNLESS OTHERWISE SPECIFIED BY THE ENGINEER.
CONSTRUCT TOP OF BERM A MINIMUM OF ONE FOOT BELOW THE SHOULDER OR ANY DIVERSION POINT.

STATE OF NORTH CAROLINA
DEPT. OF TRANSPORTATION
DIVISION OF HIGHWAYS
RALEIGH, N.C.

7-06

ENGLISH STANDARD DRAWING FOR
ROCK INLET SEDIMENT TRAP TYPE 'B'

SHEET 1 OF 1
1632.02

STATE OF NORTH CAROLINA
DEPT. OF TRANSPORTATION
DIVISION OF HIGHWAYS
RALEIGH, N.C.

ENGLISH STANDARD DRAWING FOR
ROCK INLET SEDIMENT TRAP TYPE 'C'

SHEET 1 OF 1
1632.03

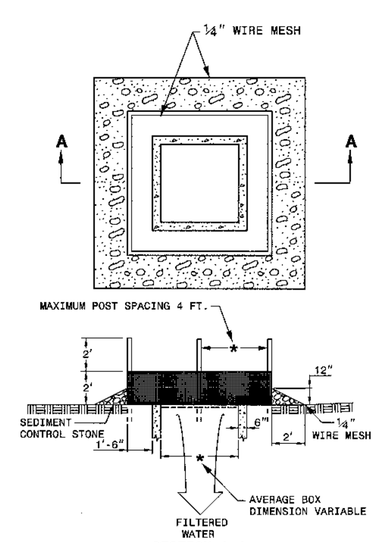

SECTION A-A

MULTI-DIRECTIONAL FLOW

NOTE
USE NO. 5 OR NO. 57 STONE FOR SEDIMENT CONTROL STONE.
USE 24 GAUGE MINIMUM WIRE MESH HARDWARE CLOTH WITH 1/4 INCH MESH OPENINGS.
PLACE TOP OF WIRE MESH A MINIMUM OF ONE FOOT BELOW THE SHOULDER OR ANY DIVERSION POINT.
INSTALL WIRE MESH UNDER SEDIMENT CONTROL STONE.
USE 5' STEEL POST, INSTALLED 1.5' DEEP MINIMUM, AND OF THE SELF-FASTENER ANGLE STEEL TYPE.
SPACE POST A MAXIMUM OF 4'.

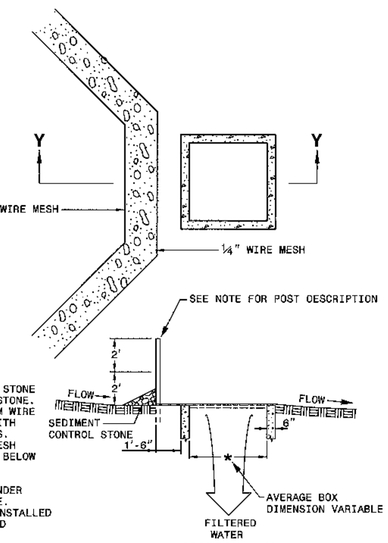

SECTION Y-Y

SINGLE-DIRECTIONAL FLOW

STATE OF NORTH CAROLINA
DEPT. OF TRANSPORTATION
DIVISION OF HIGHWAYS
RALEIGH, N.C.

ENGLISH STANDARD DRAWING FOR
ROCK INLET SEDIMENT TRAP TYPE 'C'

SHEET 1 OF 1
1632.03

PROJECT NO. 33684.1.1
ALAMANCE COUNTY
STATION: 17+00.00 -L-

ROADSIDE ENVIRONMENTAL UNIT
DEPARTMENT OF TRANSPORTATION
DIVISION OF HIGHWAYS
RALEIGH, N.C.

2006 STANDARD SPECIFICATIONS

NOTES: ANY DEVIATION FROM OPTIONS GIVEN WILL REQUIRE PRIOR APPROVAL BY ENGINEER.

ADDITIONAL EROSION CONTROL DEVICES MAY NEED TO BE INSTALLED AS DIRECTED BY THE ENGINEER.

STATE OF NORTH CAROLINA
DEPARTMENT OF TRANSPORTATION
RALEIGH

BRIDGE NO. 102 ON SR 2181
OVER SOUTH FORK CANE CREEK

EROSION CONTROL PLAN

REVISIONS						SHEET NO.
NO.	BY:	DATE:	NO.	BY:	DATE:	EC-3
1			3			TOTAL SHEETS
2			4			6

STATE OF NORTH CAROLINA
DEPT. OF TRANSPORTATION
DIVISION OF HIGHWAYS
RALEIGH, N.C.

ENGLISH STANDARD DRAWING FOR
TEMPORARY SILT FENCE

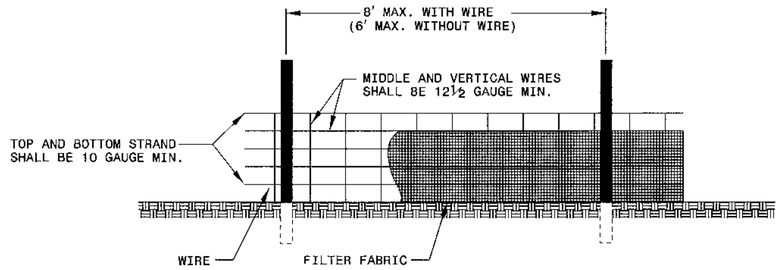

NOTES
USE WIRE A MINIMUM OF 32" IN WIDTH AND WITH A MINIMUM OF 6 LINE WIRES WITH 12" STAY SPACING.
USE FILTER FABRIC A MINIMUM OF 36" IN WIDTH AND FASTEN ADEQUATELY TO THE WIRE AS DIRECTED BY THE ENGINEER.
PROVIDE 5'-0" STEEL POST OF THE SELF-FASTENER ANGLE STEEL TYPE.

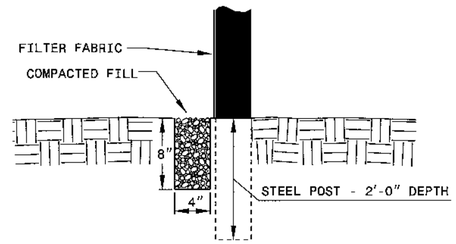

EXTENSION OF FABRIC AND WIRE INTO TRENCH

SHEET 1 OF 1
1605.01

STATE OF NORTH CAROLINA
DEPT. OF TRANSPORTATION
DIVISION OF HIGHWAYS
RALEIGH, N.C.

ENGLISH STANDARD DRAWING FOR
TEMPORARY SILT FENCE

SHEET 1 OF 1
1605.01

TEMPORARY ROCK SILT CHECK TYPE 'B' DETAIL

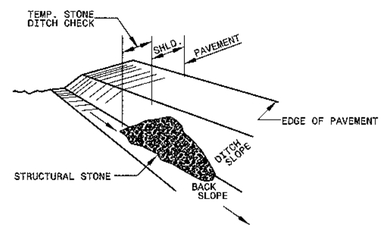

ISOMETRIC VIEW

NOTES:

USE CLASS 'B' EROSION CONTROL STONE FOR STRUCTURAL STONE.

THE ENGINEER MAY DIRECT THE OPTION OF CLASS "A" STONE FOR SITES HAVING LESS THAN ONE (1) ACRE DRAINAGE AREA AND A DITCH GRADE LESS THAN 3%.

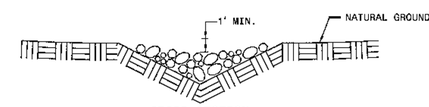

CROSS SECTION
VEE DITCH

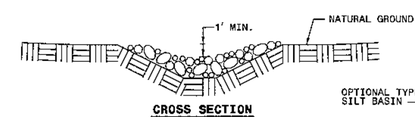

CROSS SECTION
TRAPEZOIDAL DITCH

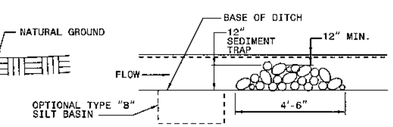

ELEVATION VIEW

PROJECT NO. 33684.1.1
ALAMANCE COUNTY
STATION: 17+00.00 -L-

ROADSIDE ENVIRONMENTAL UNIT
DEPARTMENT OF TRANSPORTATION
DIVISION OF HIGHWAYS
RALEIGH, N.C.

2006 STANDARD SPECIFICATIONS

NOTES: ANY DEVIATION FROM OPTIONS GIVEN WILL REQUIRE PRIOR APPROVAL BY ENGINEER.

ADDITIONAL EROSION CONTROL DEVICES MAY NEED TO BE INSTALLED AS DIRECTED BY THE ENGINEER.

STATE OF NORTH CAROLINA
DEPARTMENT OF TRANSPORTATION
RALEIGH

BRIDGE NO. 102 ON SR 2181
OVER SOUTH FORK CANE CREEK

EROSION CONTROL PLAN

REVISIONS						SHEET NO.
NO.	BY:	DATE:	NO.	BY:	DATE:	EC-2
1			3			TOTAL SHEETS
2			4			6

U:\Roadway\090904.Revised Erosion Control from NC007\34404_rev EC_csn.dgn 9/8/2009 3:03:24 PM $USER$

SAFETY FENCE:

Description

Safety Fence shall consist of furnishing, installing and maintaining polyethylene or polypropylene fence along the outside riparian buffer, wetland, or water boundary located within the construction corridor to mark the areas that have been approved to infringe within the buffer, wetland or water. The fence shall be installed prior to any land disturbing activities.

Materials

Polyethylene or polypropylene fence shall be a highly visible preconstructed safety fence approved by the Engineer. The fence material shall have an ultraviolet coating.

Either wood posts or steel posts may be used. Wood posts shall be hardwood with a wedge or pencil tip at one end, and shall be at least 5 ft. in length with a minimum nominal 2" x 2" cross section. Steel posts shall be at least 5 ft. in length, and have a minimum weight of 0.85 lb/ft. of length.

Construction Methods

No additional clearing and grubbing is anticipated for the installation of this fence; however, if any clearing and grubbing is required, it will be the minimum required for the installation of the safety fence. Such clearing shall include satisfactory removal and disposal of all trees, brush, stumps and other objectionable material.

The fence shall be erected to conform to the general contour of the ground. When determined necessary, minor grading along the fence line shall be performed to meet this requirement provided no obstructions to proper drainage are created.

Posts shall be set and maintained in a vertical position and may be hand set or set with a post driver. If hand set, all backfill material shall be thoroughly tamped. Wood posts may be sharpened to a dull point if power driven. Posts damaged by power driving shall be removed and replaced prior to final acceptance. The tops of all wood posts shall be cut at a 30-degree angle. The wood posts may, at the option of the Contractor, be cut at this angle either before or after the posts are erected.

The fence fabric shall be attached to the wood posts with one 2" galvanized wire staple across each cable or to the steel posts with wire or other acceptable means.

The Contractor shall be required to maintain the safety fence in a satisfactory condition for the duration of the project as determined by the Engineer.

Measurement and Payment

Safety Fence will be paid for at the contract price for "Lump Sum for Erosion Control". Such payment will be full compensation including but not limited to clearing and grading, furnishing and installing fence fabric with necessary posts and post bracing, staples, tie wires, tools, equipment and incidentals necessary to complete this work.

ROADSIDE ENVIRONMENTAL UNIT
DEPARTMENT OF TRANSPORTATION
DIVISION OF HIGHWAYS
RALEIGH, N.C.

2006 STANDARD SPECIFICATIONS

NOTES: ANY DEVIATION FROM OPTIONS GIVEN WILL REQUIRE PRIOR APPROVAL BY ENGINEER.

ADDITIONAL EROSION CONTROL DEVICES MAY NEED TO BE INSTALLED AS DIRECTED BY THE ENGINEER.

EROSION CONTROL PLAN

PROJECT NO. 33684.1.1
ALAMANCE COUNTY
STATION: 17+00.00 -L-

STATE OF NORTH CAROLINA
DEPARTMENT OF TRANSPORTATION
RALEIGH

BRIDGE NO. 102 ON SR 2181
OVER SOUTH FORK CANE CREEK

REVISIONS						SHEET NO.
NO.	BY:	DATE:	NO.	BY:	DATE:	EC-6
1			3			TOTAL SHEETS
2			4			6

L:\Roadway\090904_Revised Erosion Control from NCDOT\34404_rev EC_csr.dgn 9/8/2009 3:04:37 PM $USER$