STATE	STATE PROJECT REFERENCE NO.	SHEET NO.	TOTAL SHEETS
N.C.	B-4691	1	42

STATE PROJECT NO.	F.A. PROJ. NO.	DESCRIPTION
33837.1.1	PFH-150(2)	P.E.
33837.2.2	PFH-150(2)	R/W

STATE OF NORTH CAROLINA
DIVISION OF HIGHWAYS

TRANSYLVANIA COUNTY

LOCATION: BRIDGE NO. 59 ON SR 1324 OVER TUCKER CREEK
BETWEEN TENNESSEE GAP AND SR 1325

TYPE OF WORK: BRIDGE REPLACEMENT WITH PRE-STRESSED CONCRETE CORED SLAB
SUPERSTRUCTURE ON STEEL PILE END BENTS AND ROADWAY APPROACHES

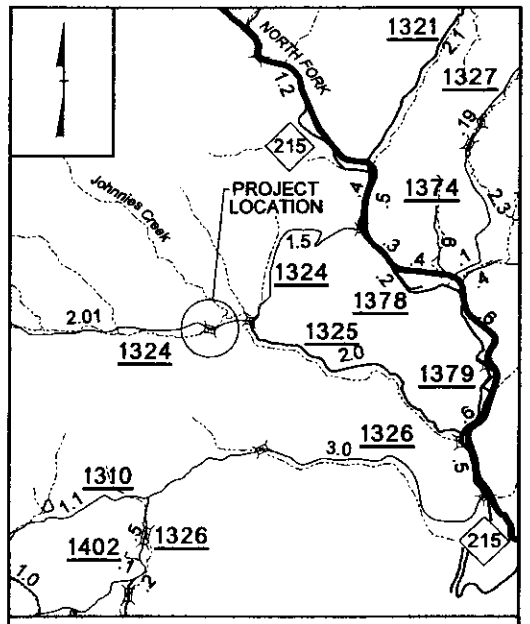

VICINITY MAP
(NOT TO SCALE)

NOTE:
PLANS ARE BASED ON PARTIAL PRELIMINARY SURVEY. ALL BEARINGS, STATIONS, ELEVATIONS, COORDINATES, AND ALL RELATED GEOMETRIC INFORMATION ARE PROVIDED FOR GENERAL INFORMATION ONLY. THE CONTRACTOR SHALL FIELD VERIFY ALL PLAN GEOMETRIC AND SURVEY INFORMATION IN DETAIL PRIOR TO ORDERING MATERIALS OR BEGINNING ANY CONSTRUCTION AND NOTIFY THE ENGINEER IN WRITING OF ANY DISCREPANCIES. THE CONTRACTOR SHALL SUBMIT TO THE ENGINEER IN WRITING RECOMMENDATIONS FOR RESOLVING ANY DISCREPANCIES. THE CONTRACTOR SHALL NOT ORDER MATERIALS OR BEGIN ANY CONSTRUCTION UNTIL THE ENGINEER HAS APPROVED IN WRITING THE PROPOSED RESOLUTIONS FOR ANY DISCREPANCIES.

NAD 83

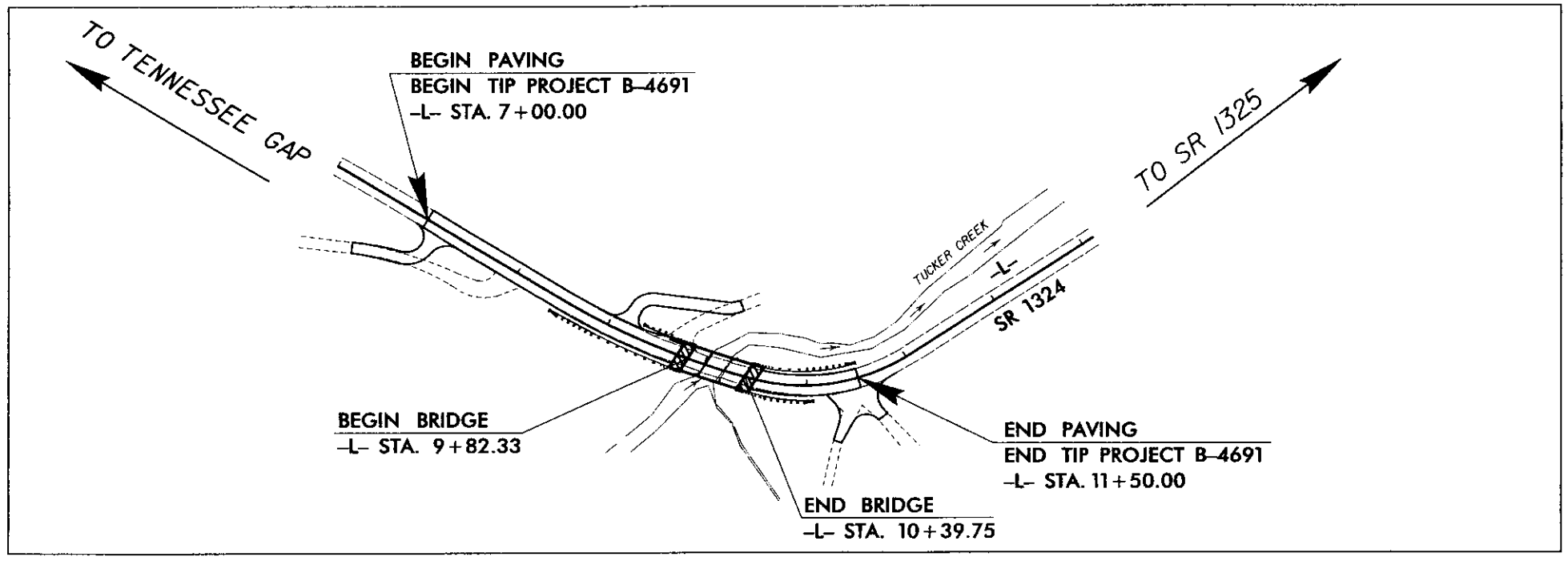

LOCATION SKETCH

HDR Engineering, Inc. of the Carolinas
3733 National Drive, Suite 207 Raleigh, N.C. 27612
N.C.B.E.L.S. License Number: F-0116

WBS: 33837 TIP PROJECT: B-4691

STATE OF NORTH CAROLINA DEPARTMENT OF TRANSPORTATION

DESIGN DATA

ADT 2003 = 350
ADT 2030 = 850
DHV = %
D = %
T = 3 % *
V = 45 MPH

* TTST 2% DUAL 1%

PROJECT LENGTH

LENGTH ROADWAY TIP PROJECT B-4691 = 0.074 MILE

LENGTH STRUCTURE TIP PROJECT B-4691 = 0.011 MILE

TOTAL LENGTH TIP PROJECT B-4691 = 0.085 MILE

Prepared in the Office of:
BRIDGE MANAGEMENT UNIT
NORTH CAROLINA DEPARTMENT OF TRANSPORTATION

2006 STANDARD SPECIFICATIONS

LETTING DATE:

DAN HOLDERMAN, PE
STATE BRIDGE MANAGEMENT ENGINEER

NCDOT CONTACT: MIKE SUMMERS
BRIDGE MANAGEMENT PROJECT MANAGER

NORTH CAROLINA PROFESSIONAL SEAL 026441 ENGINEER DOMINIC M. WAINWRIGHT
9/24/09

DOMINIC WAINWRIGHT, PE
DESIGN ENGINEER

9/22/2009
C:\PWworking\TPA\d0135325\b4691_rdy_tsh.dgn
4:47:34 PM

DATUM DESCRIPTION

NOTE:
PLANS ARE BASED ON PARTIAL PRELIMINARY SURVEY. ALL BEARINGS, STATIONS, ELEVATIONS, COORDINATED, AND ALL RELATED GEOMETRIC INFORMATION ARE PROVIDED FOR GENERAL INFORMATION ONLY. THE CONTRACTOR SHALL FIELD VERIFY ALL PLAN GEOMETRIC AND SURVEY INFORMATION IN DETAIL PRIOR TO ORDERING MATERIALS OR BEGINING CONSTRUCTION AND NOTIFY THE ENGINEER IN WRITING OF ANY DISCREPANCIES. THE CONTRACTOR SHALL SUBMIT TO THE ENGINEER IN WRITING RECOMMENDATIONS FOR RESOLVING ANY DISCREPANCIES. THE CONTRACTOR SHALL NOT ORDER MATERIALS UNTIL THE ENGINEER HAS APPROVED IN WRITING THE PROPOSED RESOLUTIONS FOR ANY DISCREPANCIES.

NOTES

1. ASSUMED LIVE LOAD = HL 93 OR ALTERNATE LOADING.
2. THIS BRIDGE HAS BEEN DESIGNED IN ACCORDANCE WITH THE AASHTO LRFD BRIDGE DESIGN SPECIFICATIONS.
3. THIS BRIDGE HAS BEEN DESIGNED IN ACCORANCE WITH THE REQUIREMENTS OF THE AASHTO LRFD BRIDGE SPECIFICATIONS FOR SEISMIC ZONE 1.
4. FOR OTHER DESIGN DATA AND GENERAL NOTES, SEE SHEET SN.
5. FOR EROSION CONTROL MEASURES SEE EROSION CONTROL PLANS.
6. THE SUBSTRUCTURE OF THE EXISTING BRIDGE INDICATED ON THE PLANS IS FROM THE BEST INFORMATION AVAILABLE. SINCE THIS INFORMATION IS SHOWN FOR THE CONVENIENCE OF THE CONTRACTOR, THE CONTRACTOR SHALL HAVE NO CLAIM WHATSOEVER AGAINST THE DEPARTMENT OF TRANSPORTATION FOR ANY DELAYS OR ADDITIONAL COST INCURRED BASED ON DIFFERENCES BETWEEN THE EXISTING BRIDGE SUBSTRUCTURE SHOWN ON THE PLANS AND THE ACTUAL CONDITIONS AT THE PROJECT SITE.
7. PLAIN RIP RAP CLASS II (2'-0" THICK)
   END BENT 1 = 179 TONS
   END BENT 2 = 164 TONS
8. SEE ROADWAY SHEETS FOR TYPICAL SECTION, PAVEMENT, AND OTHER ROADWAY INFORMATION.
9. CONSTRUCTION SHALL BE IN ACCORDANCE WITH THE NORTH CAROLINA DEPARTMENT OF TRANSPORTATION "STANDARD SPECIFICATIONS FOR ROADS AND STRUCTURES", JULY 2006.
10. THIS BRIDGE SHALL BE CONSTRUCTED USING TOP-DOWN CONSTRUCTION METHODS. THE USE OF A TEMPORARY CAUSEWAY OR WORK BRIDGE IS NOT PERMITTED.
11. FOR PILES, SEE SPECIAL PROVISIONS.
12. PILES AT END BENT NO. 1 ARE DESIGNED FOR A FACTORED RESISTANCE OF 90 TONS PER PILE. DRIVE PILES TO A REQUIRED DRIVING RESISTANCE OF 150 TONS PER PILE.
13. PILE EXCAVATION IS REQUIRED TO INSTALL PILES AT END BENT NO. 1. EXCAVATE HOLES TO ELEVATION 85.0.
14. CONCRETE IS REQUIRED TO FILL HOLES FOR PILE EXCAVATION AT END BENT NO. 1.
15. PILES AT END BENT NO. 2 ARE DESIGNED FOR A FACTORED RESISTANCE OF 90 TONS PER PILE. DRIVE PILES TO A REQUIRED DRIVING RESISTANCE OF 150 TONS PER PILE.
16. PILE EXCAVATION IS REQUIRED TO INSTALL PILES AT END BENT NO. 2. EXCAVATE HOLES TO ELEVATION 85.0.
17. CONCRETE IS REQUIRED TO FILL HOLES FOR PILE EXCAVATION AT END BENT NO. 2.

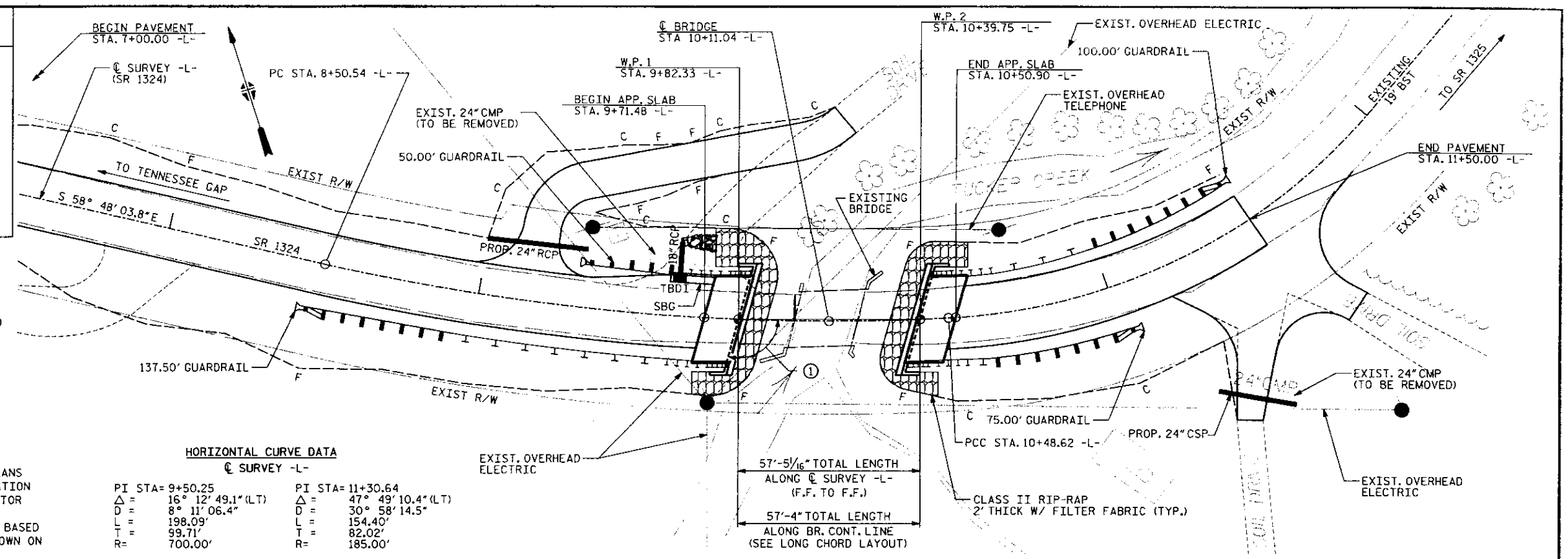

HORIZONTAL CURVE DATA

℄ SURVEY -L-

PI STA= 9+50.25	PI STA= 11+30.64
Δ = 16° 12' 49.1" (LT)	Δ = 47° 49' 10.4" (LT)
D = 8° 11' 06.4"	D = 30° 58' 14.5"
L = 198.09'	L = 154.40'
T = 99.71'	T = 82.02'
R= 700.00'	R= 185.00'

PLAN

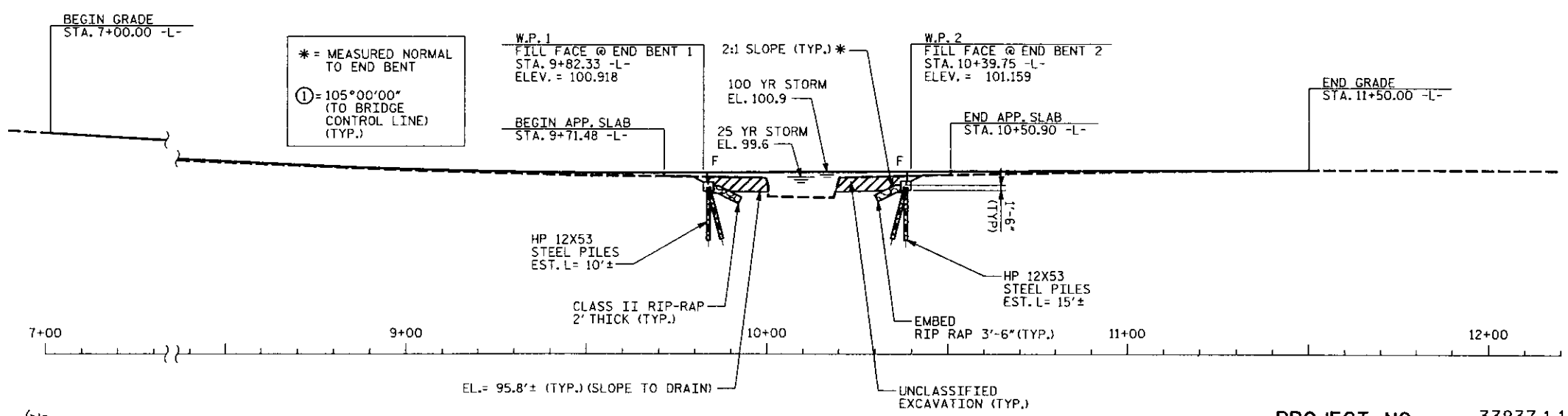

(-)6.3317% (-)4.8609%
PI = 7+50.00
EL = 108.98'
VC = 100'
GRADE DATA
℄ SURVEY -L-

(-)4.8609% (+)0.4200%
PI = 9+21.00
EL = 100.66'
VC = 100'
GRADE DATA
℄ SURVEY -L-

PROFILE ALONG ℄ SURVEY

EXISTING BRIDGE INFORMATION

SPANS: 1 @ 20'-6" (CRUTCH BENT AT MIDSPAN)
CLEAR ROADWAY WIDTH = 17.0'
END BENTS: TIMBER CAPS, TIMBER POSTS & SILLS
TIMBER DECK ON TIMBER JOISTS
TO BE REMOVED

HYDRAULIC DATA

DRAINAGE AREA	2.7 SQ. MI.
DESIGN DISCHARGE	900 CFS
DESIGN FREQUENCY	25 YR.
DESIGN HIGH WATER ELEVATION	99.6 FT
BASE DISCHARGE	1400 CFS
BASE FREQUENCY	100 YR.
BASE HIGH WATER ELEVATION	100.9 FT
OVERTOPPIG DISCHARGE	1050 CFS
OVERTOPPING WSEL	100.0 FT

PROJECT NO. 33837.1.1
TRANSYLVANIA COUNTY
STATION: 10+11.04 -L-
SHEET 1 OF 3
REPLACES BRIDGE NO. 59

NORTH CAROLINA PROFESSIONAL SEAL 29589 ENGINEER DOMENIC A. COLETTI
9-24-09

STATE OF NORTH CAROLINA
DEPARTMENT OF TRANSPORTATION
RALEIGH

BRIDGE ON SR 1324 OVER TUCKER CREEK BETWEEN TENNESSEE GAP AND SR 1325
26'-10" CLEAR ROADWAY-105° SKEW

REVISIONS							SHEET NO.
NO.	BY:	DATE:	NO.	BY:	DATE:		2
1			3				TOTAL SHEETS
2			4				42

HDR Engineering, Inc. of the Carolinas
3733 National Drive, Suite 207 Raleigh, N.C. 27612
N.C.B.E.L.S. License Number: F-0176

DRAWN BY : M. SELLS DATE : 03 / 09
CHECKED BY : D. COLETTI DATE : 03 / 09

PLOT DRIVER: HP4500.mono.eng.50.PLT
USER: dwolnwrl DATE: 9/22/2009
FILE: North Carolina.Dept.of.Transportation\NCDOT_BMU_Replacements\13.00.NCDOT_File.Structure\B-4691 Transylvania Bridge No.59\Structures\CAD\B4691_SD_GD_01.dgn
PENTABLE: B-4691PEN.tbl
TIME: 6:14:12 PM

NOTES

HORIZONTAL CURVATURE OF ℄ SURVEY -L- EXAGGERATED FOR CLARITY.

END BENTS 1 & 2 ARE PARALLEL.

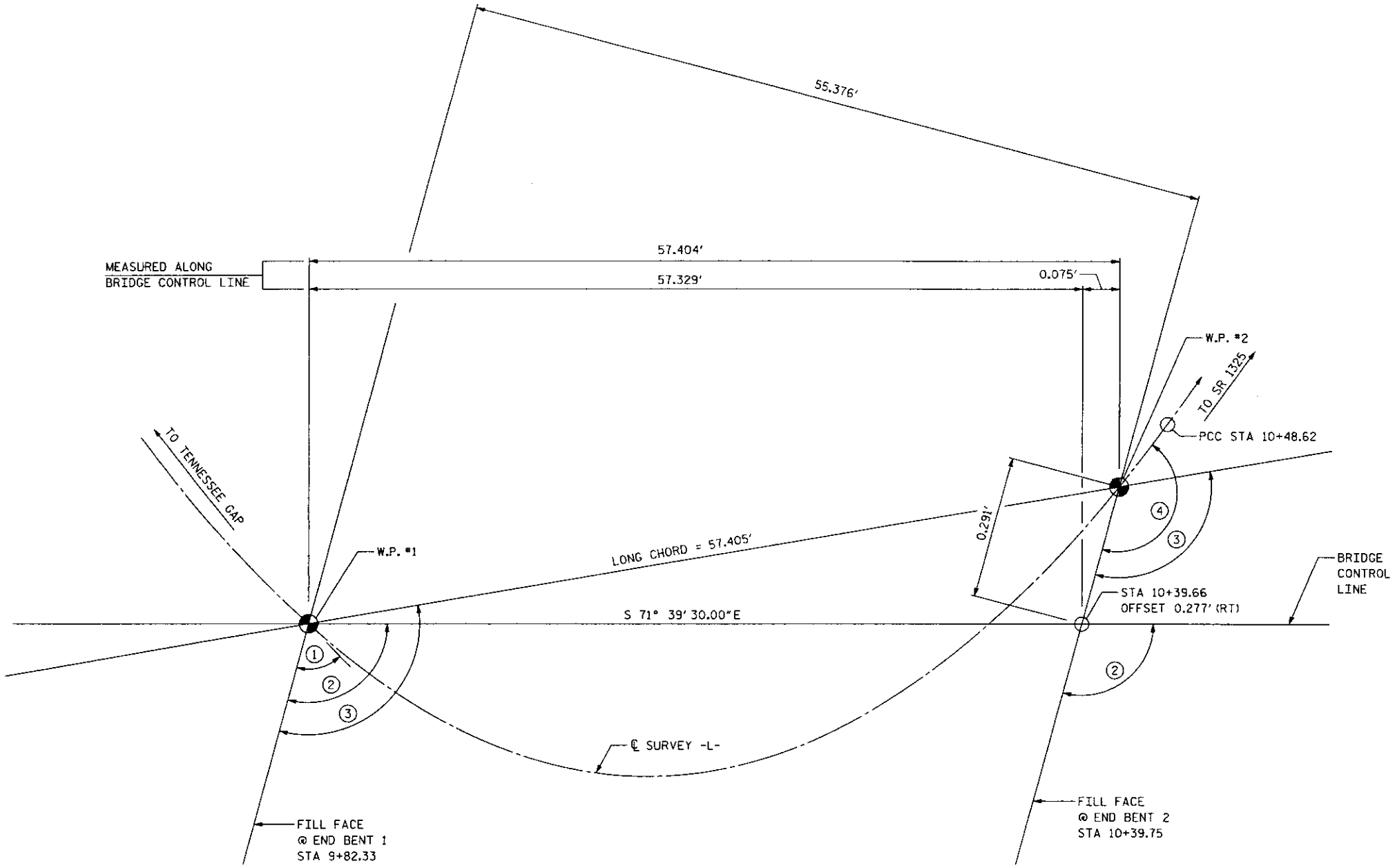

SPAN A

LONG CHORD LAYOUT

ANGLES

1. 102° 55' 48.9"(TO TAN. ON ℄ SURVEY -L-)
2. 105° 00' 00"(TO BRIDGE CONTROL LINE)
3. 105° 16' 48.60"(TO LONG CHORD)
4. 107° 37' 48.60"(TO TAN. ON ℄ SURVEY -L-)

℄ SURVEY -L- HORIZ. CURVE DATA

PI = 9+50.25	PI = 11+30.64
Δ = 16°12'49.7"(LT)	Δ = 47°49'10.4"(LT)
D = 8°11'06.4"	D = 30°58'14.5"
L = 198.09'	L = 154.40'
T = 99.71'	T = 82.02'
R = 700.00'	R = 185.00'

PROJECT NO. 33837.1.1

TRANSYLVANIA COUNTY

STATION: 10+11.04 -L-

SHEET 2 OF 3

NORTH CAROLINA PROFESSIONAL SEAL 29589 ENGINEER DOMENIC A. COLETTI 9-24-09

STATE OF NORTH CAROLINA
DEPARTMENT OF TRANSPORTATION
RALEIGH

GENERAL DRAWING
LONG CHORD LAYOUT

26'-10" CLEAR ROADWAY-105° SKEW

HDR Engineering, Inc. of the Carolinas
3733 National Drive, Suite 207 Raleigh, N.C. 27612
N.C.B.E.L.S. License Number: F-0116

REVISIONS							SHEET NO. 3
NO.	BY:	DATE:	NO.	BY:	DATE:		TOTAL SHEETS 42
1			3				
2			4				

DRAWN BY : M. SELLS DATE : 03 / 09
CHECKED BY : D. COLETTI DATE : 03 / 09

PLOT DRIVER: HP4500_mono_eng.50.PLT PENTABLE: B-4691PEN.tbl
USER: dwalnwrl DATE: 9/22/2009 TIME: 6:18:54 PM
FILE: North Carolina Dept of Transportation\NCDOT_BMU_Replacements\13.00_NCDOT_File_Structure\B-4691 Transylvania Bridge No.59\Structures\CAD\B4691_SD_GD_02.dgn

LOAD AND RESISTANCE FACTOR RATING (LRFR) SUMMARY FOR PRESTRESSED CONCRETE BOX BEAMS

LEVEL	VEHICLE	WEIGHT (W) (TONS)	CONTROLLING LOAD RATING (#)	MINIMUM RATING FACTORS (RF)	TONS = W x RF	STRENGTH I LIMIT STATE									SERVICE III LIMIT STATE					COMMENT NUMBER
							MOMENT				SHEAR					MOMENT				
						LIVE-LOAD FACTORS (η_L)	DISTRIBUTION FACTORS (DF)	RATING FACTOR	SPAN	DISTANCE FROM LEFT END OF SPAN (ft)	DISTRIBUTION FACTORS (DF)	RATING FACTOR	SPAN	DISTANCE FROM LEFT END OF SPAN (ft)	LIVE-LOAD FACTORS (η_L)	DISTRIBUTION FACTORS (DF)	RATING FACTOR	SPAN	DISTANCE FROM LEFT END OF SPAN (ft)	
DESIGN LOAD RATING	HL-93 (INVENTORY)	N/A	1	1.07	--	1.75	0.29	1.20	A	28.68	0.71	1.07	A	4.18	0.80	0.29	1.30	A	28.68	
	HL-93 (OPERATING)	N/A		1.39	--	1.35	0.29	1.55	A	28.68	0.71	1.39	A	4.18	N/A	--	--	--	--	
	HS-20 (INVENTORY)	36.00	2	1.31	47.16	1.80	0.29	1.46	A	28.68	0.71	1.40	A	4.18	1.00	0.29	1.31	A	28.68	1
	HS-20 (OPERATING)	36.00		1.87	67.32	1.35	0.29	1.95	A	28.68	0.71	1.87	A	4.18	N/A	--	--	--	--	
LEGAL LOAD RATING	SNSH	13.50		3.07	41.45	1.80	0.29	3.07	A	28.68	0.71	3.75	A	4.18	1.00	0.29	2.75	A	28.68	
	SNGARBS2	20.00		2.38	47.60	1.80	0.29	2.38	A	28.68	0.71	2.68	A	4.18	1.00	0.29	2.13	A	28.68	
	SNAGRIS2	22.00		2.30	50.60	1.80	0.29	2.30	A	28.68	0.71	2.50	A	4.18	1.00	0.29	2.06	A	28.68	
	SNCOTTS3	27.25		1.53	41.69	1.80	0.29	1.53	A	28.68	0.71	1.71	A	4.18	1.00	0.29	1.37	A	28.68	
	SNAGGRS4	34.92		1.31	45.75	1.80	0.29	1.31	A	28.68	0.71	1.35	A	4.18	1.00	0.29	1.18	A	28.68	
	SNS5A	35.55		1.28	45.50	1.80	0.29	1.28	A	28.68	0.71	1.39	A	4.18	1.00	0.29	1.15	A	28.68	
	SNS6A	39.95		1.19	47.54	1.80	0.29	1.19	A	28.68	0.71	1.23	A	4.18	1.00	0.29	1.07	A	28.68	
	SNS7B	42.00		1.14	47.88	1.80	0.29	1.14	A	28.68	0.71	1.21	A	4.18	1.00	0.29	1.02	A	28.68	
	TNAGRIT3	33.00		1.46	48.18	1.80	0.29	1.46	A	28.68	0.71	1.57	A	4.18	1.00	0.29	1.31	A	28.68	
	TNT4A	33.08		1.47	48.63	1.80	0.29	1.47	A	28.68	0.71	1.49	A	4.18	1.00	0.29	1.32	A	28.68	
	TNAGRIT4	43.00		1.08	46.44	1.80	0.29	1.22	A	28.68	0.71	1.08	A	4.18	1.00	0.29	1.09	A	28.68	
	TNAGRIT5A	45.00		1.10	49.50	1.80	0.29	1.14	A	28.68	0.71	1.10	A	4.18	1.00	0.29	1.02	A	28.68	
	TNAGRIT5B	45.00	3	1.01	45.45	1.80	0.29	1.12	A	28.68	0.71	1.01	A	4.18	1.00	0.29	1.00	A	28.68	
	TNT6A	41.60		1.22	50.75	1.80	0.29	1.22	A	28.68	0.71	1.38	A	4.18	1.00	0.29	1.09	A	28.68	
	TNT7A	42.00		1.23	51.66	1.80	0.29	1.23	A	28.68	0.71	1.27	A	4.18	1.00	0.29	1.10	A	28.68	
	TNT7B	42.00		1.15	48.30	1.80	0.29	1.28	A	28.68	0.71	1.15	A	4.18	1.00	0.29	1.15	A	28.68	

LOAD FACTORS

LIMIT STATE	γ_{DC}	γ_{DW}
STRENGTH I	1.25	1.50
SERVICE III	1.00	1.00

NOTES

MINIMUM RATING FACTORS FOR DESIGN LOAD RATING ARE BASED ON THE STRENGTH I AND SERVICE III LIMIT STATES.

MINIMUM RATING FACTORS FOR LEGAL LOAD RATING ARE BASED ON THE STRENGTH I LIMIT STATE.

ALLOWABLE STRESSES FOR SERVICE III LIMIT STATE ARE AS REQUIRED FOR DESIGN.

COMMENTS

1. (2) EXTERIOR GIRDER CONTROLS.
2. INTERIOR GIRDERS CONTROL UNLESS OTHERWISE NOTED.

(#) CONTROLLING LOAD RATING

(1) DESIGN LOAD RATING (HL-93)

(2) DESIGN LOAD RATING (HS-20)

(3) LEGAL LOAD RATING **

** SEE CHART FOR VEHICLE TYPE

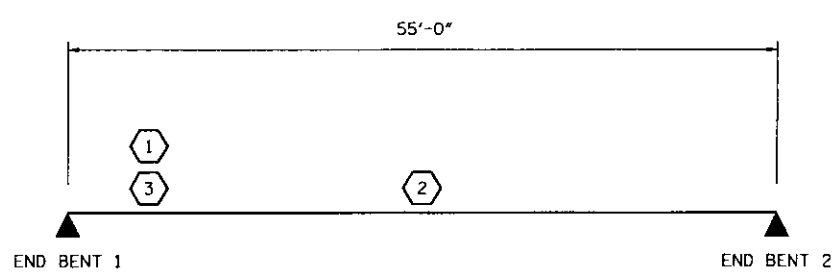

LRFR SUMMARY

PROJECT NO. 33837.1.1

TRANSYLVANIA COUNTY

STATION: 10+11.04 -L-

SHEET 3 OF 3

STATE OF NORTH CAROLINA
DEPARTMENT OF TRANSPORTATION
RALEIGH

LRFR SUMMARY FOR PRESTRESSED CONCRETE GIRDERS (NON-INTERSTATE TRAFFIC)

26'-10" CLEAR ROADWAY-105° SKEW

NORTH CAROLINA PROFESSIONAL SEAL 29589 ENGINEER DOMENIC A. COLETTI 4-24-09

HDR Engineering, Inc. of the Carolinas
2733 National Drive, Suite 202 Raleigh, N.C. 27610
N.C.B.E.L.S. License Number: F-0116

REVISIONS

NO.	BY:	DATE:	NO.	BY:	DATE:
1			3		
2			4		

SHEET NO. 4

TOTAL SHEETS 42

DRAWN BY : M. SELLS DATE : 03 / 09
CHECKED BY : D. COLETTI DATE : 03 / 09

PLOT DRIVER: HP4500_mono.eng.50.PLT PENTABLE: B-4691PEN.tbl
USER: dwainwr DATE: 9/22/2009 TIME: 6:19:03 PM
FILE: North Carolina.Dept.of.Transportation\NCDOT_BMU_Replacements\13.00_NCDOT_File_Structure\B-4691 Transylvania Bridge No.59\Structures\CAD\B4691_SD_LRFR_01.dgn

PROJECT REFERENCE NO.	SHEET NO.
B-4691	5

Note: Not to Scale

**S.U.E. = Subsurface Utility Engineering*

STATE OF NORTH CAROLINA
DIVISION OF HIGHWAYS

CONVENTIONAL PLAN SHEET SYMBOLS

BOUNDARIES AND PROPERTY:

- State Line
- County Line
- Township Line
- City Line
- Reservation Line
- Property Line
- Existing Iron Pin — EIP
- Property Corner
- Property Monument — EPM
- Parcel/Sequence Number — 123
- Existing Fence Line
- Proposed Woven Wire Fence
- Proposed Chain Link Fence
- Proposed Barbed Wire Fence
- Existing Wetland Boundary — WLB
- Proposed Wetland Boundary — WLB
- Existing Endangered Animal Boundary — EAB
- Existing Endangered Plant Boundary — EPB

BUILDINGS AND OTHER CULTURE:

- Gas Pump Vent or U/G Tank Cap
- Sign — S
- Well — W
- Small Mine
- Foundation
- Area Outline
- Cemetery
- Building
- School
- Church
- Dam

HYDROLOGY:

- Stream or Body of Water
- Hydro, Pool or Reservoir
- Jurisdictional Stream — JS
- Buffer Zone 1 — BZ 1
- Buffer Zone 2 — BZ 2
- Flow Arrow
- Disappearing Stream
- Spring
- Wetland
- Proposed Lateral, Tail, Head Ditch — FLOW
- False Sump

RAILROADS:

- Standard Gauge — CSX TRANSPORTATION
- RR Signal Milepost — MILEPOST 35
- Switch — SWITCH
- RR Abandoned
- RR Dismantled

RIGHT OF WAY:

- Baseline Control Point
- Existing Right of Way Marker
- Existing Right of Way Line
- Proposed Right of Way Line
- Proposed Right of Way Line with Iron Pin and Cap Marker
- Proposed Right of Way Line with Concrete or Granite Marker
- Existing Control of Access
- Proposed Control of Access
- Existing Easement Line — E
- Proposed Temporary Construction Easement — E
- Proposed Temporary Drainage Easement — TDE
- Proposed Permanent Drainage Easement — PDE
- Proposed Permanent Utility Easement — PUE

ROADS AND RELATED FEATURES:

- Existing Edge of Pavement
- Existing Curb
- Proposed Slope Stakes Cut — C
- Proposed Slope Stakes Fill — F
- Proposed Wheel Chair Ramp — WCR
- Proposed Wheel Chair Ramp Curb Cut — WCC
- Curb Cut for Future Wheel Chair Ramp — CCFR
- Existing Metal Guardrail
- Proposed Guardrail
- Existing Cable Guiderail
- Proposed Cable Guiderail
- Equality Symbol
- Pavement Removal

VEGETATION:

- Single Tree
- Single Shrub
- Hedge
- Woods Line
- Orchard
- Vineyard — Vineyard

EXISTING STRUCTURES:

MAJOR:

- Bridge, Tunnel or Box Culvert — CONC
- Bridge Wing Wall, Head Wall and End Wall — CONC WW

MINOR:

- Head and End Wall — CONC HW
- Pipe Culvert
- Footbridge
- Drainage Box: Catch Basin, DI or JB — CB
- Paved Ditch Gutter
- Storm Sewer Manhole — S
- Storm Sewer — S

UTILITIES:

POWER:

- Existing Power Pole
- Proposed Power Pole
- Existing Joint Use Pole
- Proposed Joint Use Pole
- Power Manhole — P
- Power Line Tower
- Power Transformer
- U/G Power Cable Hand Hole — HH
- H-Frame Pole
- Recorded U/G Power Line — P
- Designated U/G Power Line (S.U.E.*) — P

TELEPHONE:

- Existing Telephone Pole
- Proposed Telephone Pole
- Telephone Manhole — T
- Telephone Booth
- Telephone Pedestal — T
- Telephone Cell Tower
- U/G Telephone Cable Hand Hole — HH
- Recorded U/G Telephone Cable — T
- Designated U/G Telephone Cable (S.U.E.*) — T
- Recorded U/G Telephone Conduit — TC
- Designated U/G Telephone Conduit (S.U.E.*) — TC
- Recorded U/G Fiber Optics Cable — T FO
- Designated U/G Fiber Optics Cable (S.U.E.*) — T FO

WATER:

- Water Manhole — W
- Water Meter
- Water Valve
- Water Hydrant
- Recorded U/G Water Line — W
- Designated U/G Water Line (S.U.E.*) — W
- Above Ground Water Line — A/G Water

TV:

- TV Satellite Dish
- TV Pedestal — C
- TV Tower
- U/G TV Cable Hand Hole — HH
- Recorded U/G TV Cable — TV
- Designated U/G TV Cable (S.U.E.*) — TV
- Recorded U/G Fiber Optic Cable — TV FO
- Designated U/G Fiber Optic Cable (S.U.E.*) — TV FO

GAS:

- Gas Valve
- Gas Meter
- Recorded U/G Gas Line — G
- Designated U/G Gas Line (S.U.E.*) — G
- Above Ground Gas Line — A/G Gas

SANITARY SEWER:

- Sanitary Sewer Manhole
- Sanitary Sewer Cleanout
- U/G Sanitary Sewer Line — SS
- Above Ground Sanitary Sewer — A/G Sanitary Sewer
- Recorded SS Forced Main Line — FSS
- Designated SS Forced Main Line (S.U.E.*) — FSS

MISCELLANEOUS:

- Utility Pole
- Utility Pole with Base
- Utility Located Object
- Utility Traffic Signal Box — S
- Utility Unknown U/G Line — ?/?
- U/G Tank; Water, Gas, Oil
- A/G Tank; Water, Gas, Oil
- U/G Test Hole (S.U.E.*)
- Abandoned According to Utility Records — AATUR
- End of Information — E.O.I.

3/15/06
9/22/2009
G:\Pworking\TPA\d0135325\b4691_rdy_tsh.dgn
4:47:35 PM

PROJECT REFERENCE NO.	SHEET NO.
B-4691	6
R/W SHEET NO.	

ROADWAY DESIGN ENGINEER

NORTH CAROLINA PROFESSIONAL SEAL 026441 ENGINEER DOMINIC M. WAINWRIGHT

9/24/09

HDR Engineering, Inc. of the Carolinas
3733 National Drive, Suite 207 Raleigh, N.C. 27612
N.C.B.E.L.S. License Number: F-0116

PAVEMENT SCHEDULE

C1	PROP. APPROX. 3.0" ASPHALT CONCRETE SURFACE COURSE, TYPE S9.5B, AT AN AVERAGE RATE OF 168 Lbs PER SQUARE YARD IN EACH OF TWO LAYERS.
C2	PROP. VAR. DEPTH ASPHALT CONCRETE SURFACE COURSE, TYPE S9.5B, AT AN AVERAGE RATE OF 112 LBS. PER SQ. YD. PER 1" DEPTH TO BE PLACED IN LAYERS NOT TO EXCEED 2.0" IN DEPTH.
C3	PROP. APPROX. 2.0" ASPHALT CONCRETE SURFACE COURSE, TYPE SF9.5A, AT AN AVERAGE RATE OF 220 Lbs PER SQUARE YARD.
D1	PROP. APPROX. 2.5" ASPHALT CONCRETE INTERMEDIATE COURSE, TYPE I19.0B, AT AN AVERAGE RATE OF 285 Lbs PER SQUARE YARD.
D2	PROP. VAR. DEPTH ASPHALT CONCRETE INTERMEDIATE COURSE, TYPE I19.0B, AT AN AVERAGE RATE OF 114 LBS. PER SQ. YD. PER 1" DEPTH TO BE PLACED IN LAYERS NOT LESS THAN 2.25" OR GREATER THAN 4" IN DEPTH.
E1	PROP. APPROX. 4.0" ASPHALT CONCRETE BASE COURSE, TYPE B25.0B, AT AN AVERAGE RATE OF 456 Lbs PER SQUARE YARD.
E2	PROP. VAR. DEPTH ASPHALT CONCRETE BASE COURSE, TYPE B25.0B, AT AN AVERAGE RATE OF 114 LBS. PER SQ. YD. PER 1" DEPTH TO BE PLACED IN LAYERS NOT GREATER THAN 5.5" IN DEPTH OR LESS THAN 3" IN DEPTH.
J	PROP. 6" AGGREGATE BASE COURSE.
T	EARTH MATERIAL.
U	EXISTING PAVEMENT.
W	WEDGING

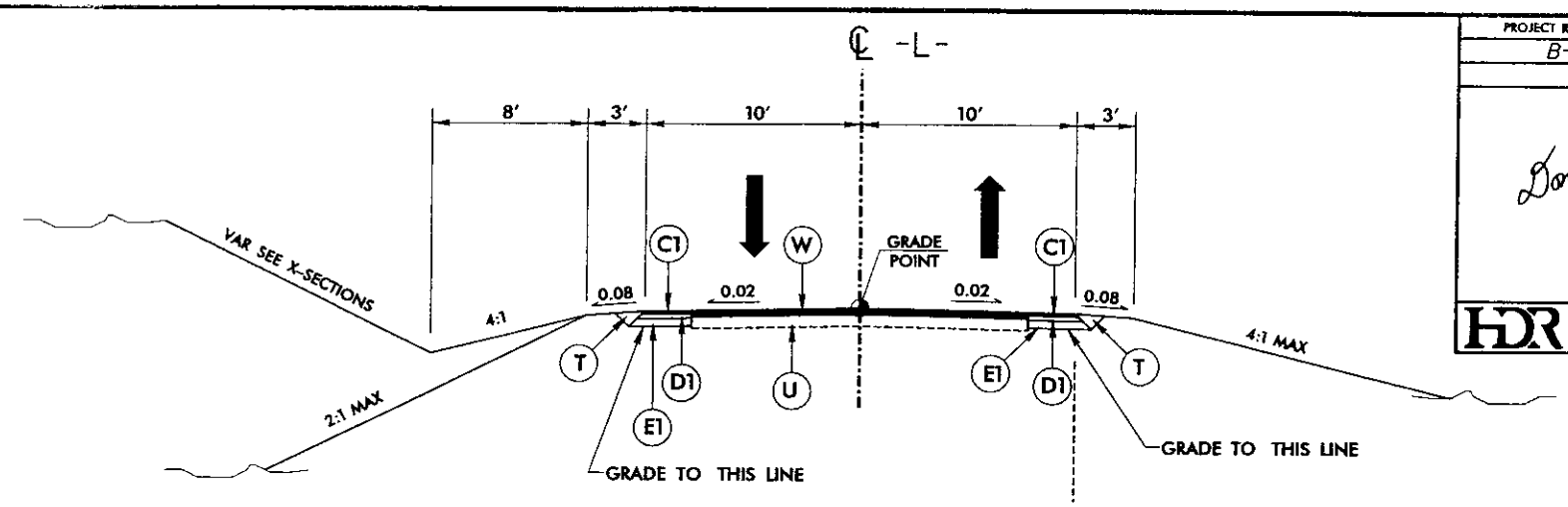

TYPICAL SECTION NO. 1

LINE	FROM STATION	TO STATION
-L-	7+00.00	9+82.33
-L-	10+39.75	11+50.00

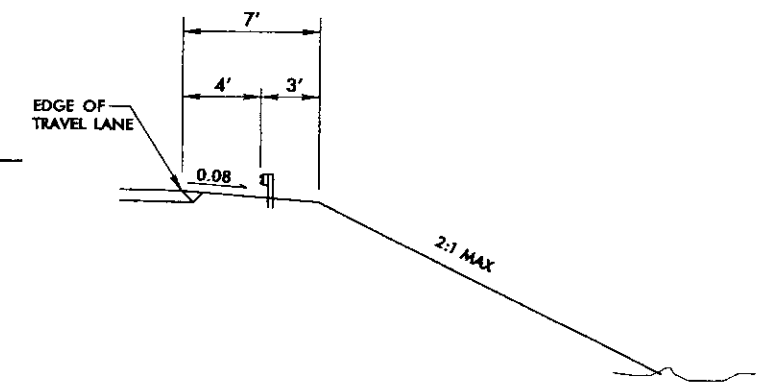

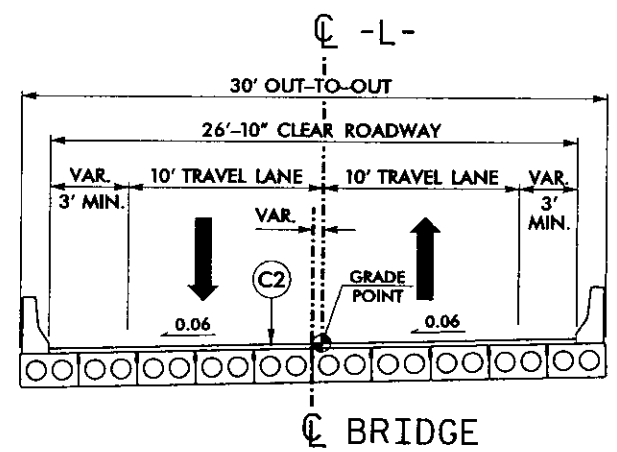

TYPICAL SECTION NO. 2

21" CORED SLAB

LINE	FROM STATION	TO STATION
-L-	9+82.33	10+39.75

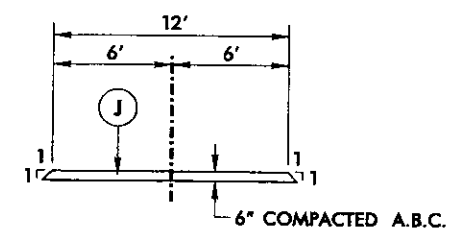

TYPICAL SECTION NO. 3

ROCK DRIVEWAYS

LINE	FROM STATION	TO STATION
-DRIVE1-	10+09.01	11+00.00
-DRIVE2-	10+10.00	11+30.55

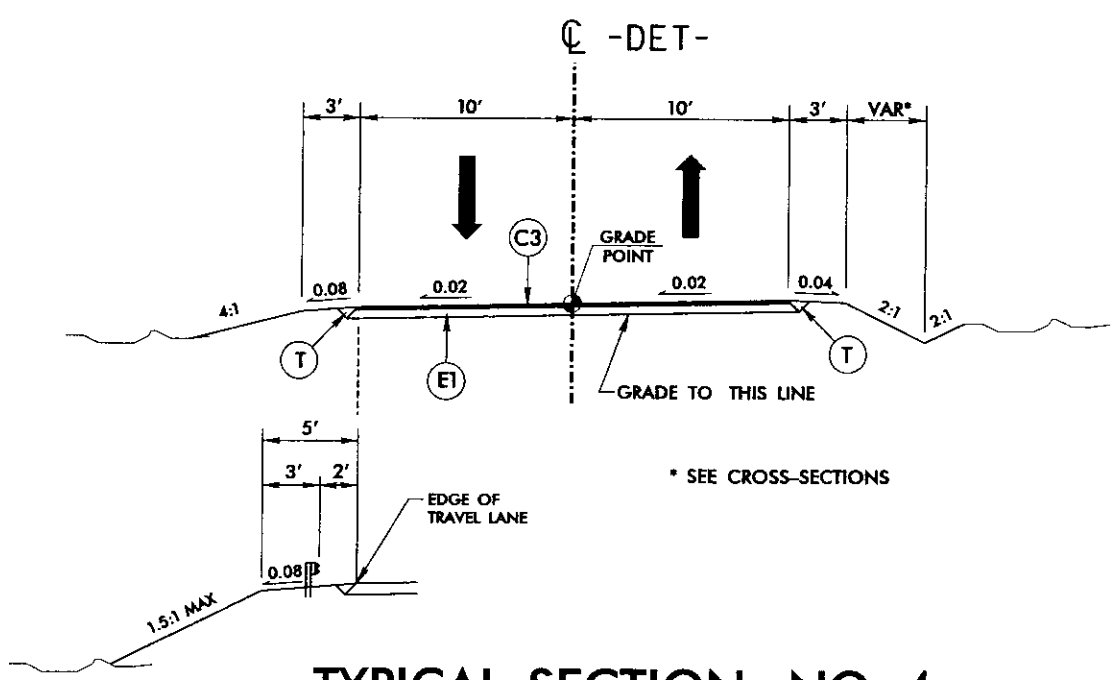

* SEE CROSS-SECTIONS

TYPICAL SECTION NO. 4

LINE	FROM STATION	TO STATION
-DET-	7+71.22	11+70.35

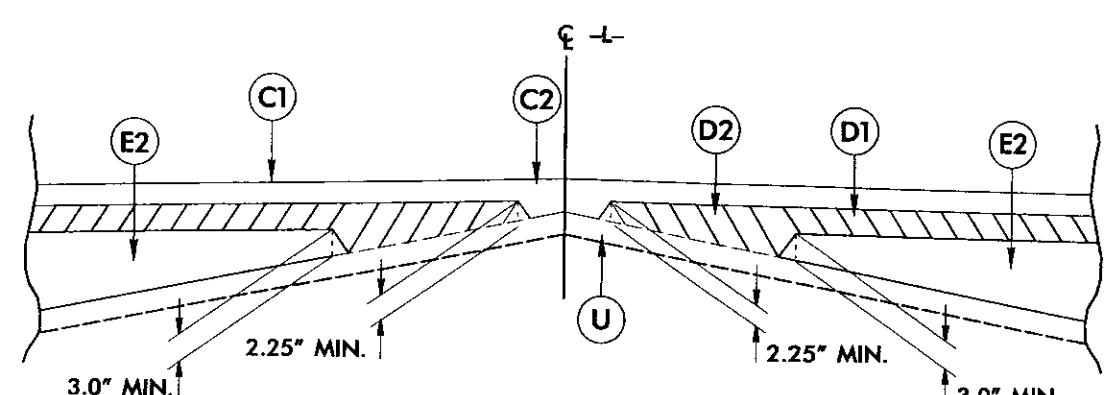

Detail Showing Method of Wedging

REVISIONS

5/14/99

9/22/2009
C:\PWworking\DOT\d0135325\b4691_rdy_typ.dgn

PROJECT REFERENCE NO.	SHEET NO.
B-4691	7
R/W SHEET NO.	

ROADWAY DESIGN ENGINEER: DOMINIC M. WAINWRIGHT, SEAL 026441, ENGINEER, 9/24/09

HYDRAULICS ENGINEER: SEAL 16833, ENGINEER, 9-24-09

HDR Engineering, Inc. of the Carolinas
3733 National Drive, Suite 207 Raleigh, N.C. 27612
N.C.B.E.L.S. License Number: F-0116

50 25 0 50 100

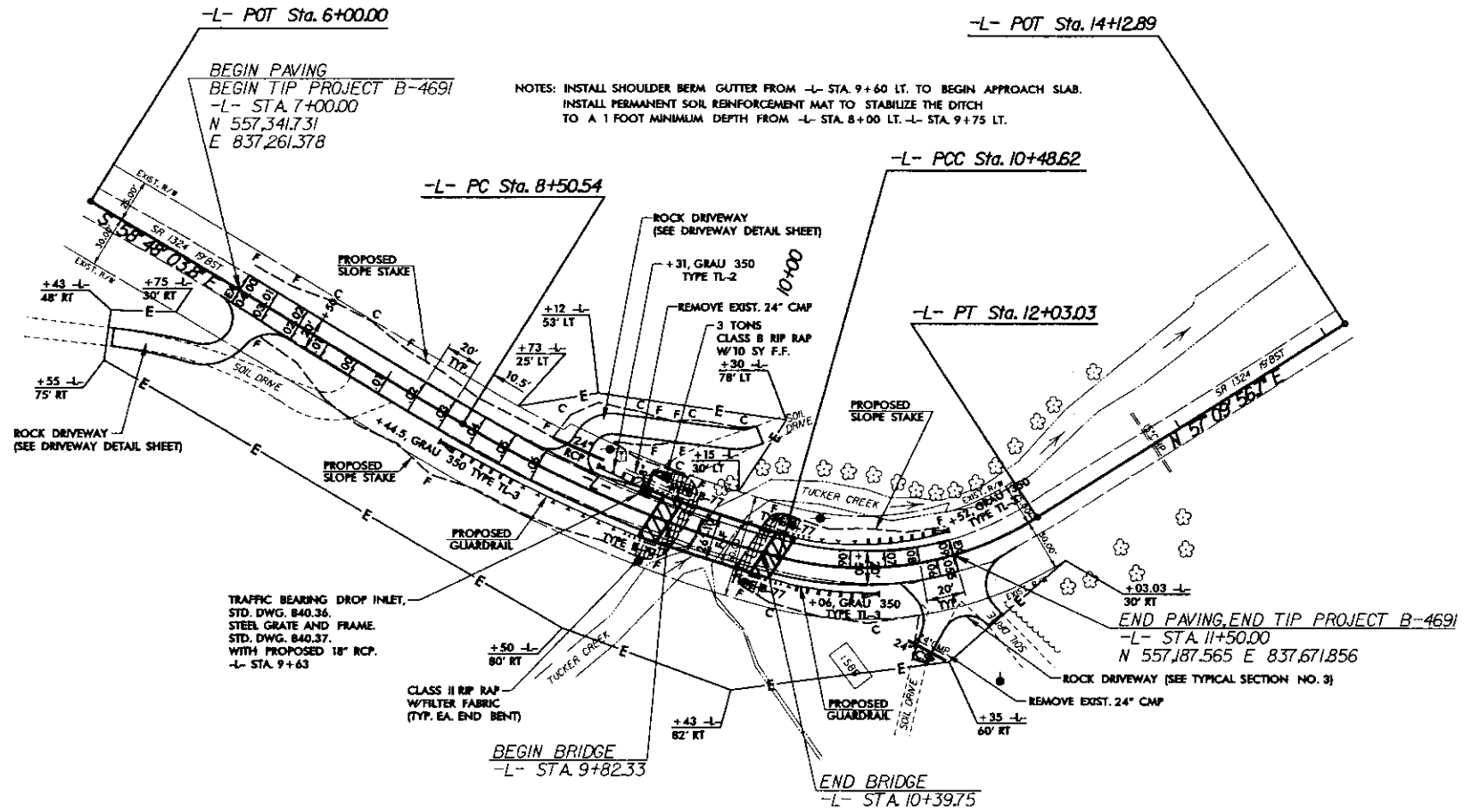

NOTES: INSTALL SHOULDER BERM GUTTER FROM -L- STA. 9+60 LT. TO BEGIN APPROACH SLAB. INSTALL PERMANENT SOIL REINFORCEMENT MAT TO STABILIZE THE DITCH TO A 1 FOOT MINIMUM DEPTH FROM -L- STA. 8+00 LT. -L- STA. 9+75 LT.

NOTE:
PLANS ARE BASED ON PARTIAL PRELIMINARY SURVEY. ALL BEARINGS, STATIONS, ELEVATIONS, COORDINATES, AND ALL RELATED GEOMETRIC INFORMATION ARE PROVIDED FOR GENERAL INFORMATION ONLY. THE CONTRACTOR SHALL FIELD VERIFY ALL PLAN GEOMETRIC AND SURVEY INFORMATION IN DETAIL PRIOR TO ORDERING MATERIALS OR BEGINNING ANY CONSTRUCTION AND NOTIFY THE ENGINEER IN WRITING OF ANY DISCREPANCIES. THE CONTRACTOR SHALL SUBMIT TO THE ENGINEER IN WRITING RECOMMENDATIONS FOR RESOLVING ANY DISCREPANCIES. THE CONTRACTOR SHALL NOT ORDER MATERIALS OR BEGIN ANY CONSTRUCTION UNTIL THE ENGINEER HAS APPROVED IN WRITING THE PROPOSED RESOLUTIONS FOR ANY DISCREPANCIES.

-L-

PI Sta 9+50.25	PI Sta 11+30.64
Δ = 16° 12' 49.1" (LT)	Δ = 41° 49' 10.4" (LT)
D = 8° 11' 06.4"	D = 30° 58' 14.5"
L = 198.09'	L = 154.40'
T = 99.71'	T = 82.02'
R = 700.00'	R = 185.00'

NOTE:
DESIGN EXCEPTIONS ARE REQUIRED FOR MINIMUM HORIZONTAL CURVE RADIUS, SAG VERTICAL CURVE 'K', HORIZONTAL SSD, AND VERTICAL SSD.

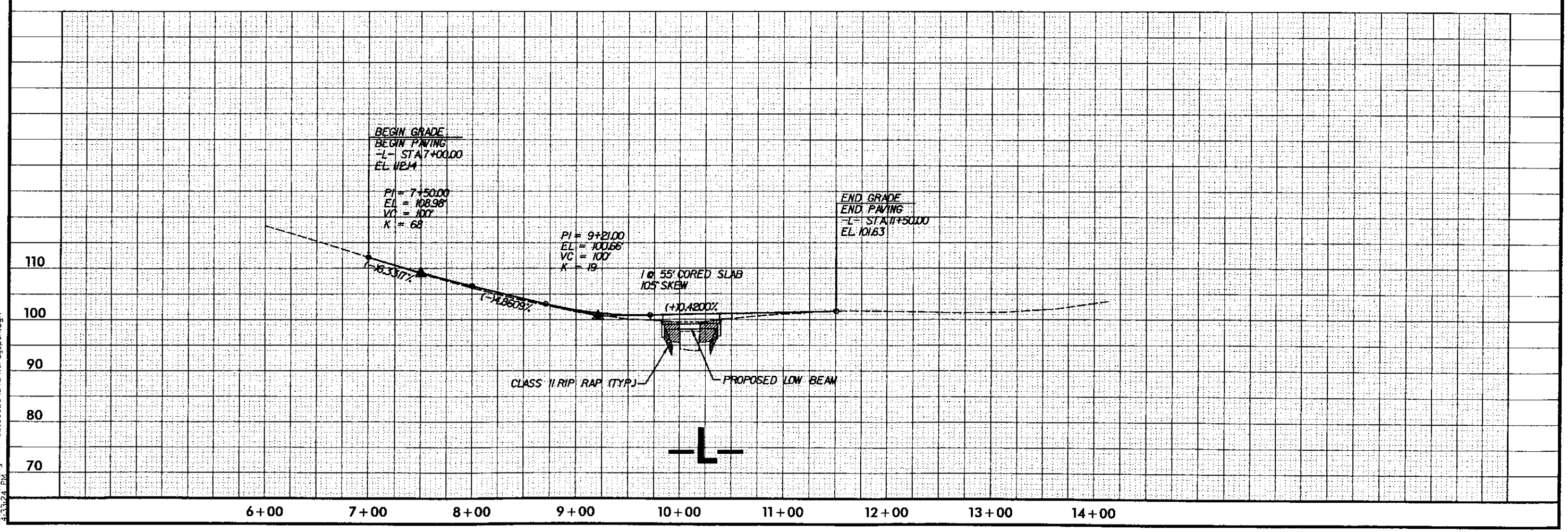

REVISIONS

8/17/99

9/22/2009
C:\PWworking\TPA\d0135325\B4691_rdy_pah.dgn
4:13:24 PM

PROJECT REFERENCE NO.	SHEET NO.
B-4691	8
R/W SHEET NO.	

ROADWAY DESIGN ENGINEER: NORTH CAROLINA PROFESSIONAL SEAL 026441 ENGINEER DOMINIC M. WAINWRIGHT 9/24/09

HYDRAULICS ENGINEER: NORTH CAROLINA PROFESSIONAL SEAL 15893 ENGINEER 9-28-09

HDR Engineering, Inc. of the Carolinas
3733 National Drive, Suite 207 Raleigh, N.C. 27612
N.C.B.E.L.S. License Number: F-0116

50 25 0 50 100

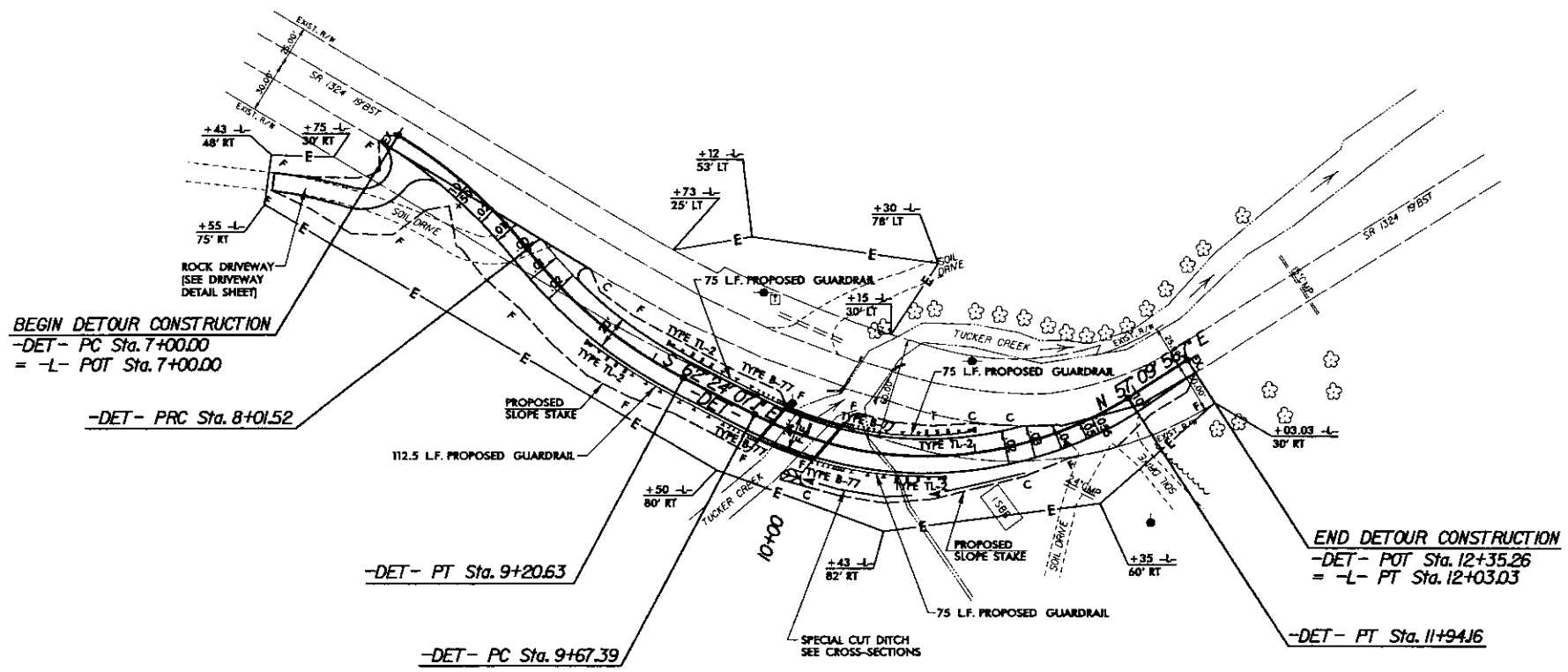

NOTE:
PLANS ARE BASED ON PARTIAL PRELIMINARY SURVEY. ALL BEARINGS, STATIONS, ELEVATIONS, COORDINATES, AND ALL RELATED GEOMETRIC INFORMATION ARE PROVIDED FOR GENERAL INFORMATION ONLY. THE CONTRACTOR SHALL FIELD VERIFY ALL PLAN GEOMETRIC AND SURVEY INFORMATION IN DETAIL PRIOR TO ORDERING MATERIALS OR BEGINNING ANY CONSTRUCTION AND NOTIFY THE ENGINEER IN WRITING OF ANY DISCREPANCIES. THE CONTRACTOR SHALL SUBMIT TO THE ENGINEER IN WRITING RECOMMENDATIONS FOR RESOLVING ANY DISCREPANCIES. THE CONTRACTOR SHALL NOT ORDER MATERIALS OR BEGIN ANY CONSTRUCTION UNTIL THE ENGINEER HAS APPROVED IN WRITING THE PROPOSED RESOLUTIONS FOR ANY DISCREPANCIES.

-DET-

PI Sta 7+51.32	PI Sta 8+61.99	PI Sta 10+92.60
Δ = 20° 46' 22.3" (RT)	Δ = 24° 22' 25.6" (LT)	Δ = 60° 25' 56.2" (LT)
D = 20° 27' 46.0"	D = 20° 27' 46.0"	D = 26° 38' 57.1"
L = 101.52'	L = 119.11'	L = 226.77'
T = 51.32'	T = 60.47'	T = 125.21'
R = 280.00'	R = 280.00'	R = 215.00'

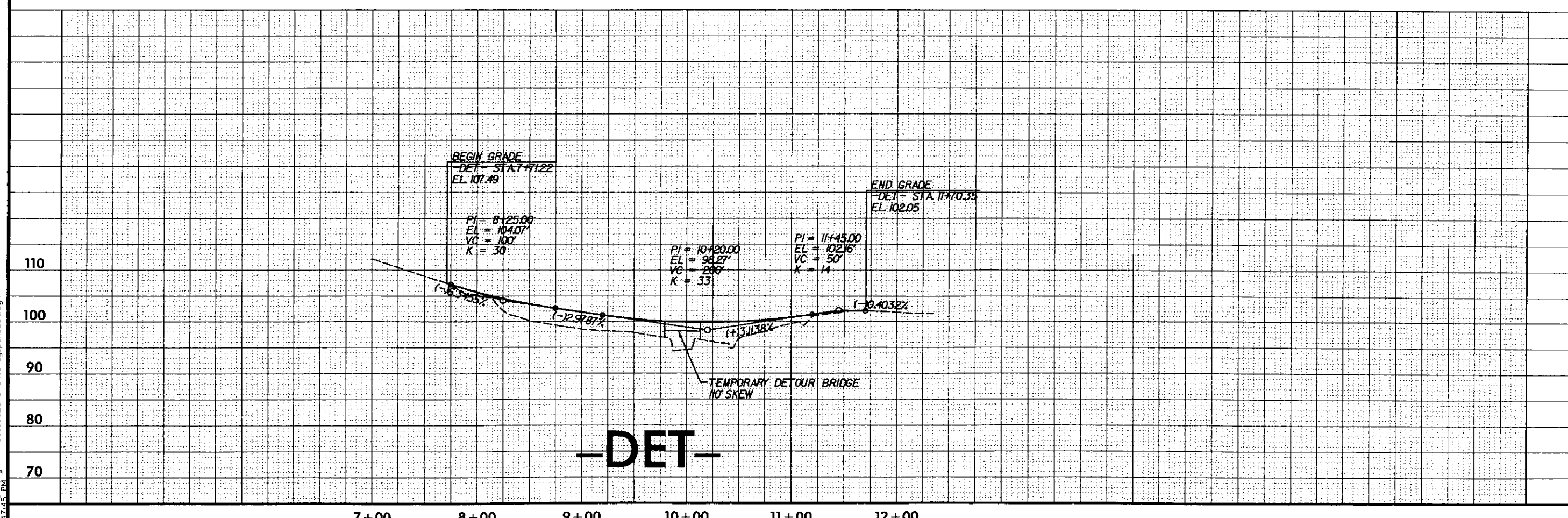

REVISIONS

8/17/99

9/22/2009
C:\Pwworking\TPA\d0135325\B4691_rdy_psh_det.dgn
4:47:45 PM

PROJECT REFERENCE NO.	SHEET NO.
B-4691	9
R/W SHEET NO.	

ROADWAY DESIGN ENGINEER

NORTH CAROLINA PROFESSIONAL SEAL 026441 ENGINEER DOMINIC M. WAINWRIGHT

9/24/09

HDR Engineering, Inc. of the Carolinas
3733 National Drive, Suite 207 Raleigh, N.C. 27612
N.C.B.E.L.S. License Number: F-0116

REVISIONS

8/17/99

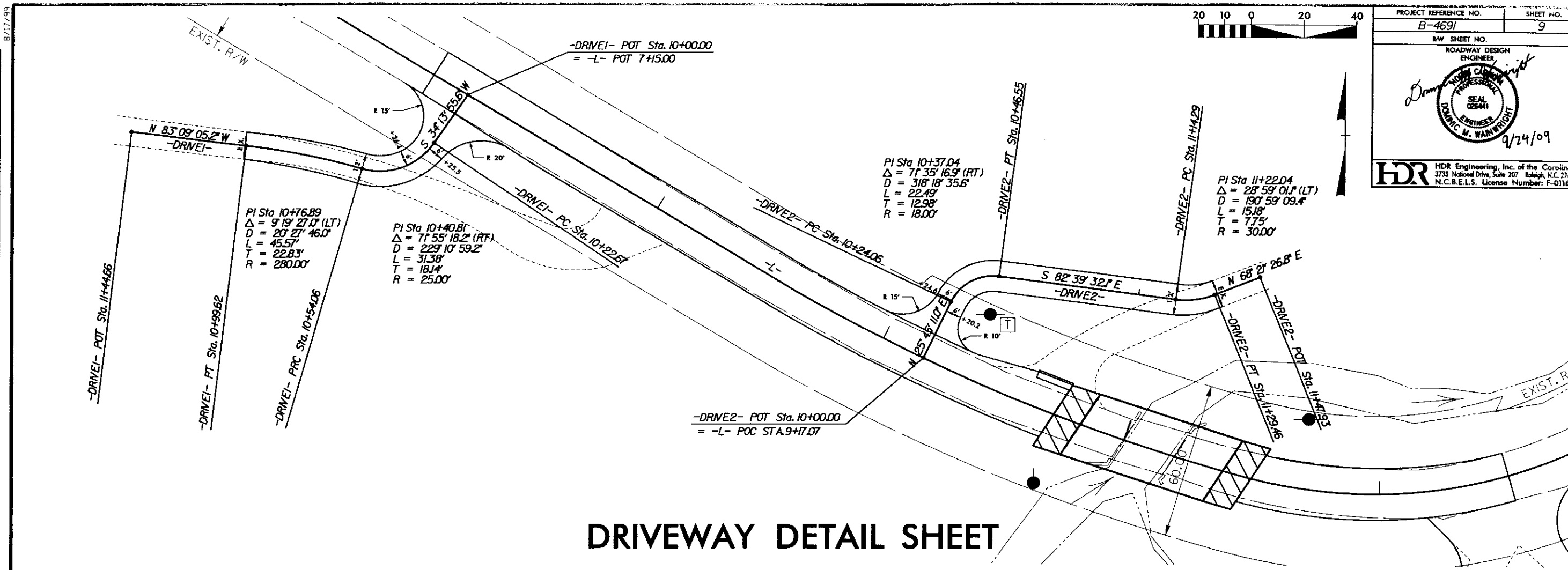

DRIVEWAY DETAIL SHEET

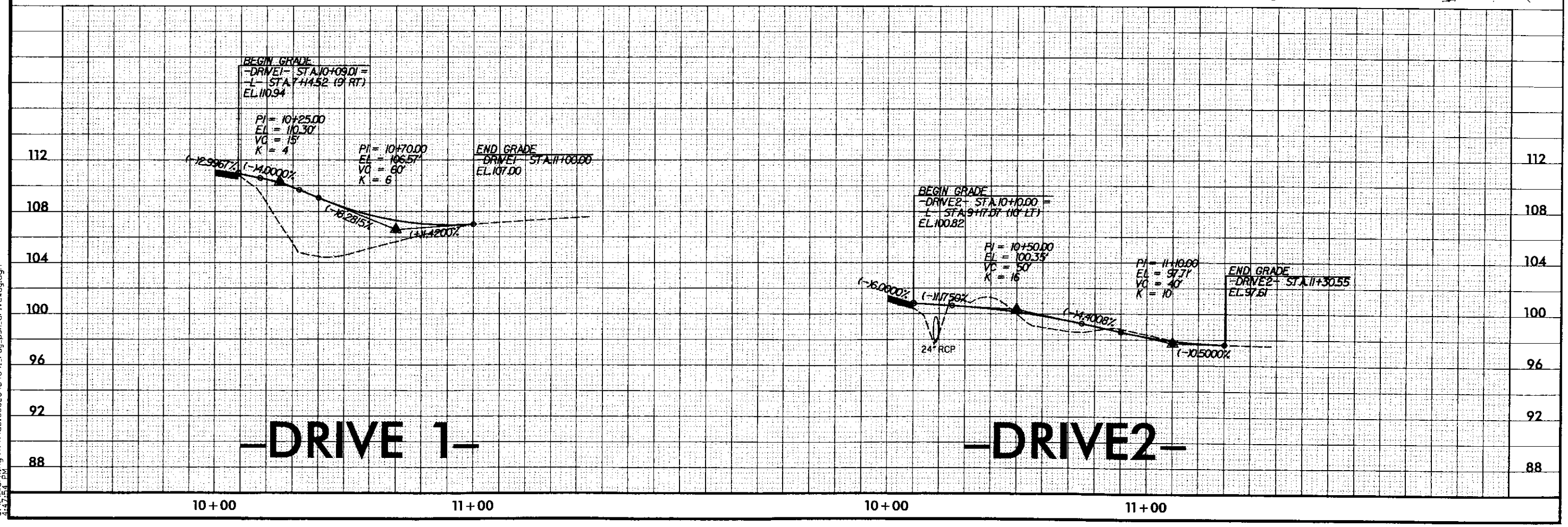

9/22/2009
C:\Working\TPA\d0135325\B4691_rdy_psh_driveway.dgn
4:47:54 PM

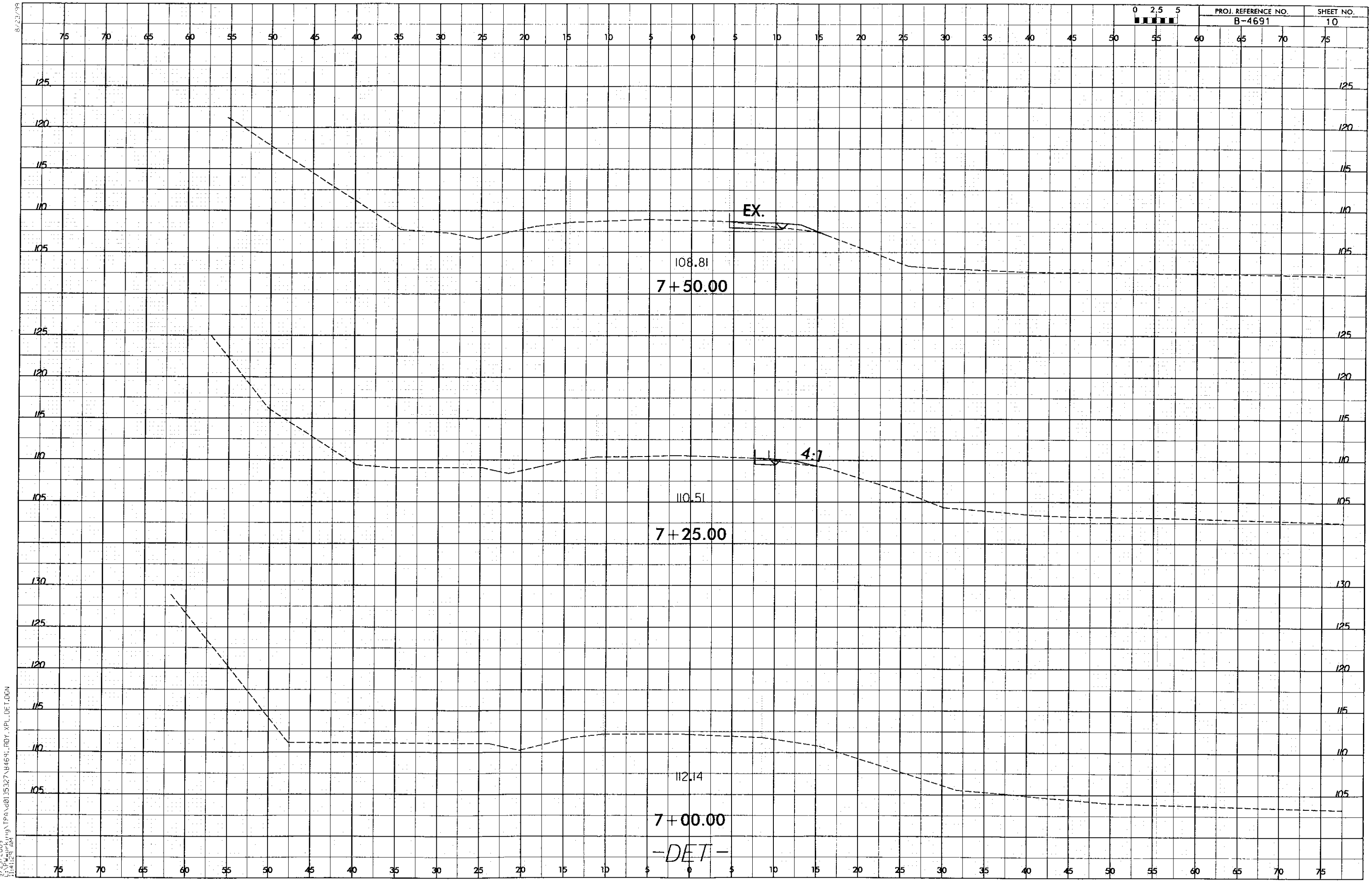
PROJ. REFERENCE NO.
B-4691
SHEET NO.
10
0 2.5 5
EX.
108.81
7+50.00
4:1
110.51
7+25.00
112.14
7+00.00
-DET-

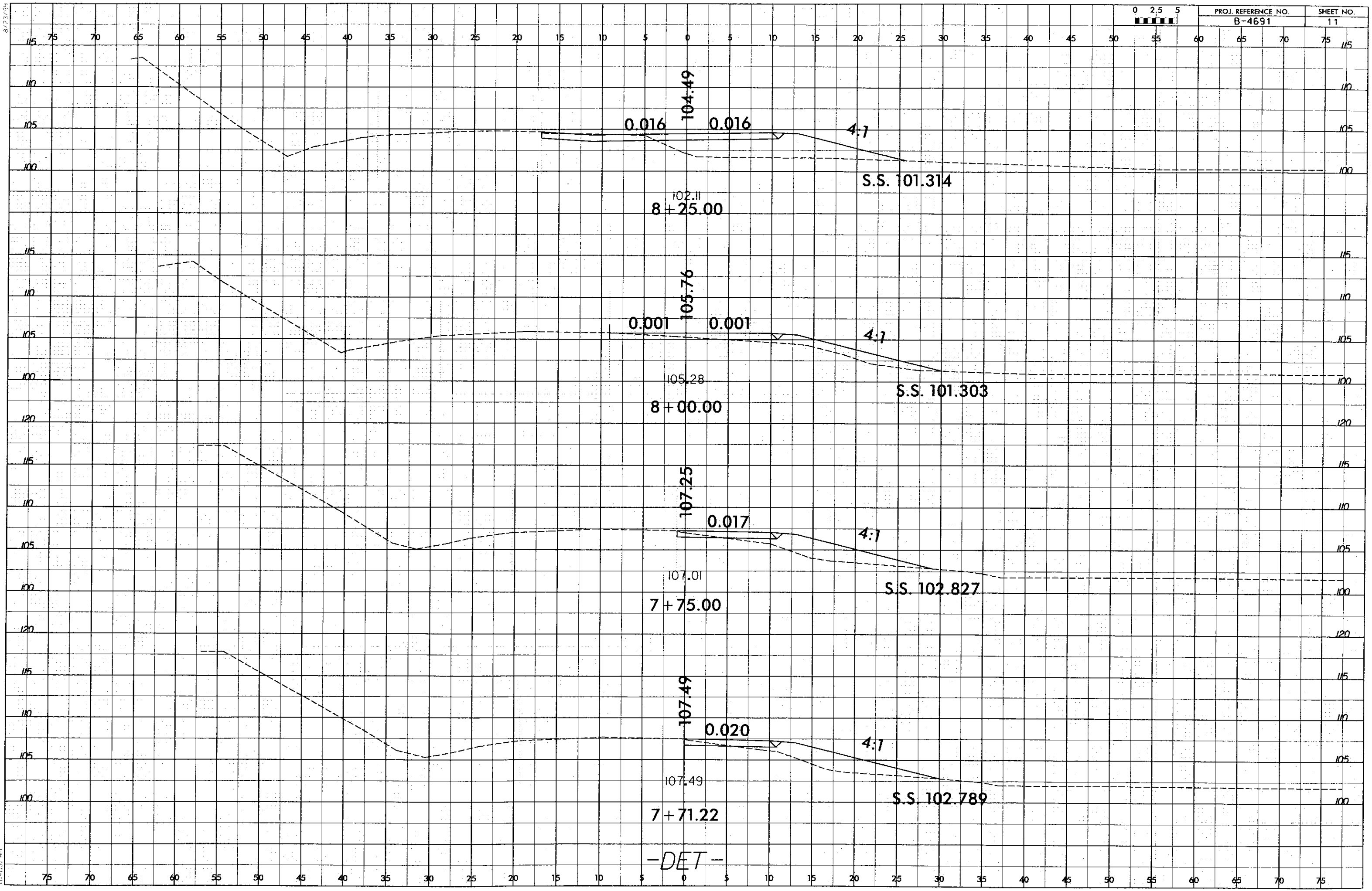
0 2.5 5
104.49
0.016
0.016
4:1
S.S. 101.314
102.11
8+25.00
105.76
0.001
0.001
4:1
S.S. 101.303
105.28
8+00.00
107.25
0.017
4:1
S.S. 102.827
107.01
7+75.00
107.49
0.020
4:1
S.S. 102.789
107.49
7+71.22
-DET-

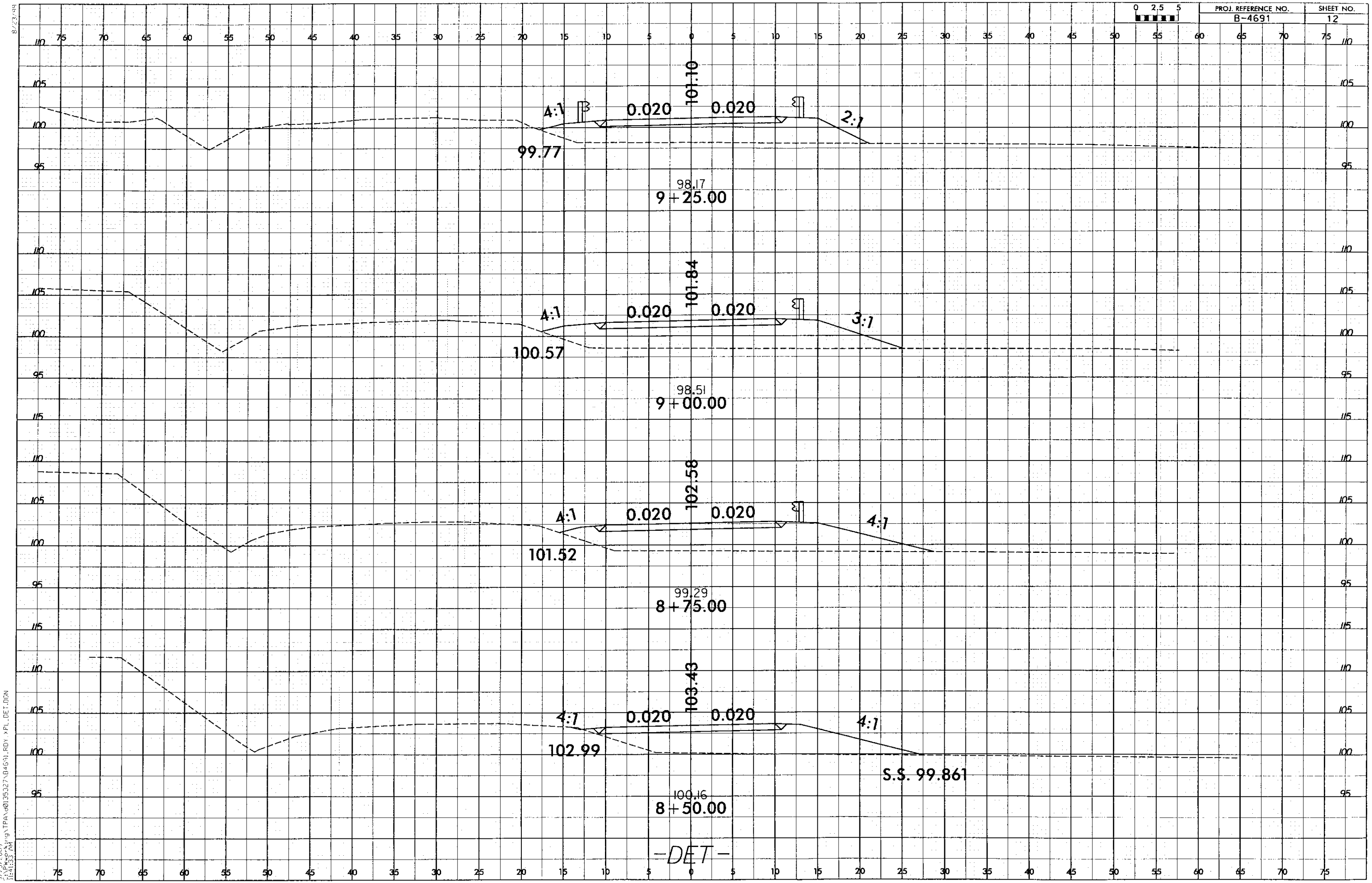

8/23/99
9/25/2009
C:\Pwworking\TPA\d0135327\B4691_RDY_XPL_DET.DGN
11:41:33 AM

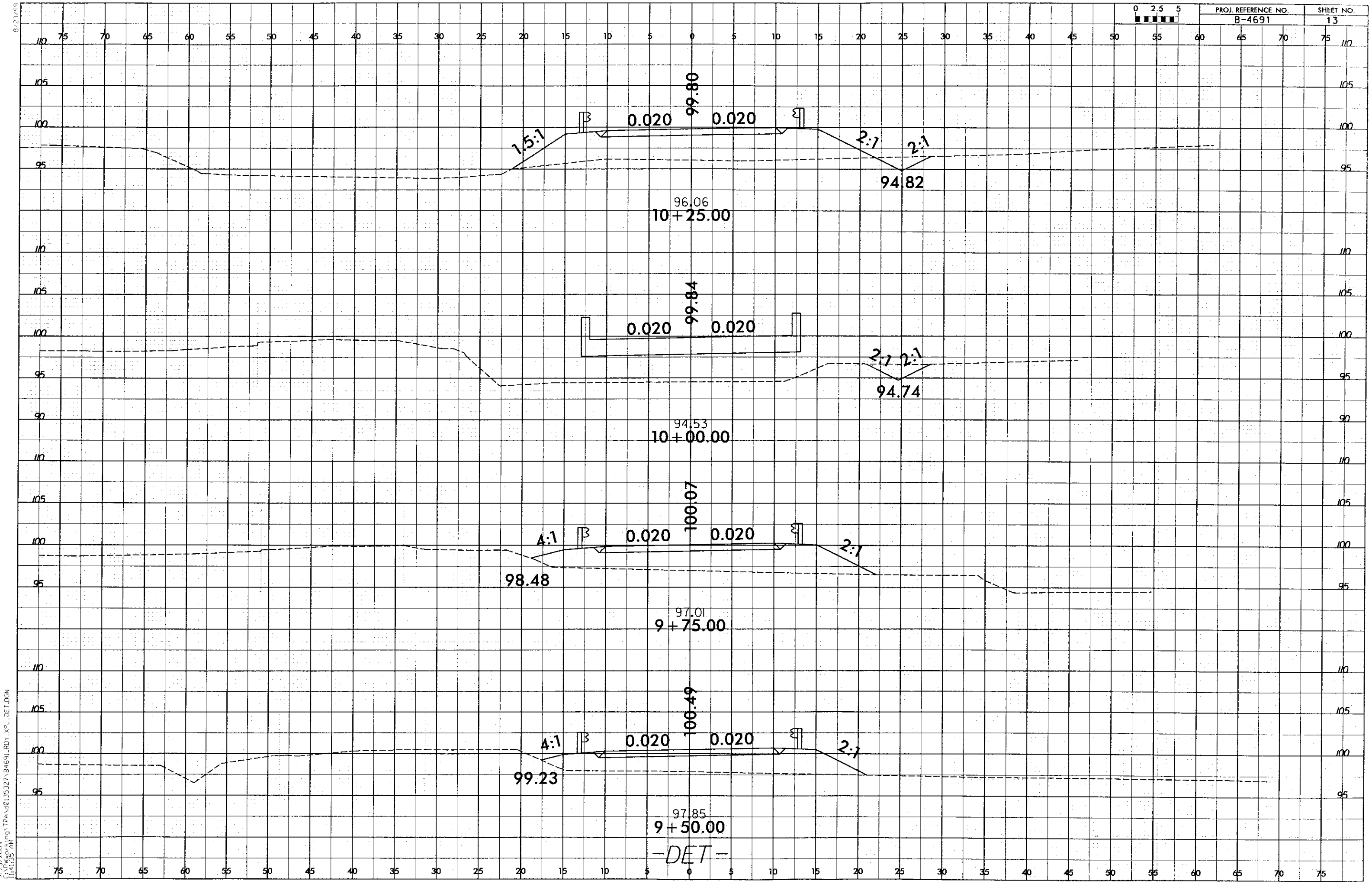
PROJ. REFERENCE NO.
B-4691
SHEET NO.
13
0 2.5 5
99.80
0.020
0.020
1.5:1
2:1
2:1
94.82
96.06
10+25.00
99.66
0.020
0.020
2:1
2:1
94.74
94.53
10+00.00
100.07
4:1
0.020
0.020
2:1
98.48
97.01
9+75.00
100.49
4:1
0.020
0.020
2:1
99.23
97.85
9+50.00
-DET-

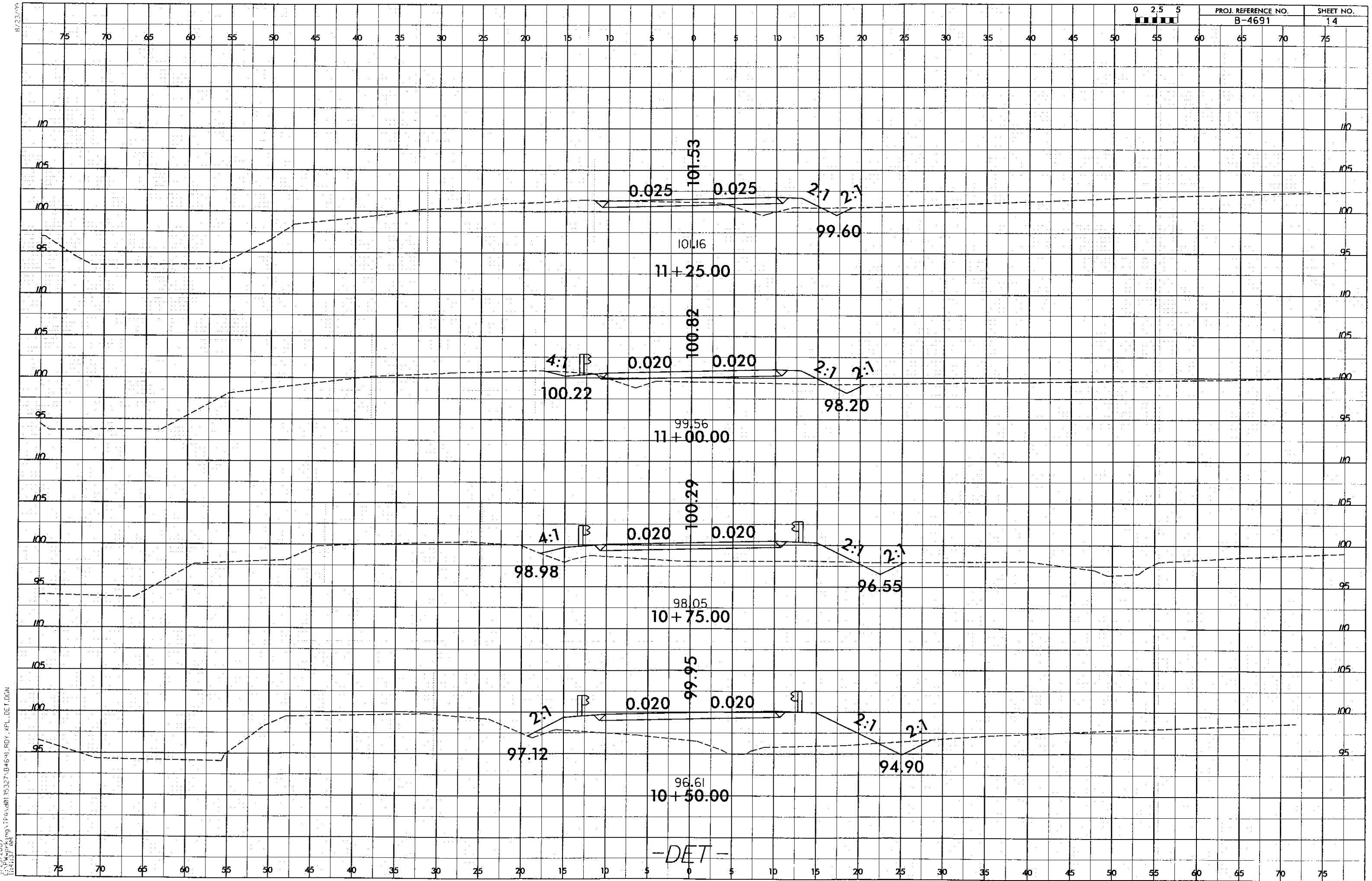

8/23/09
9/25/2009
C:\PWworking\TPQ\d0135327\B4691_RDY_XPL_DET.DGN
11:41:37 AM

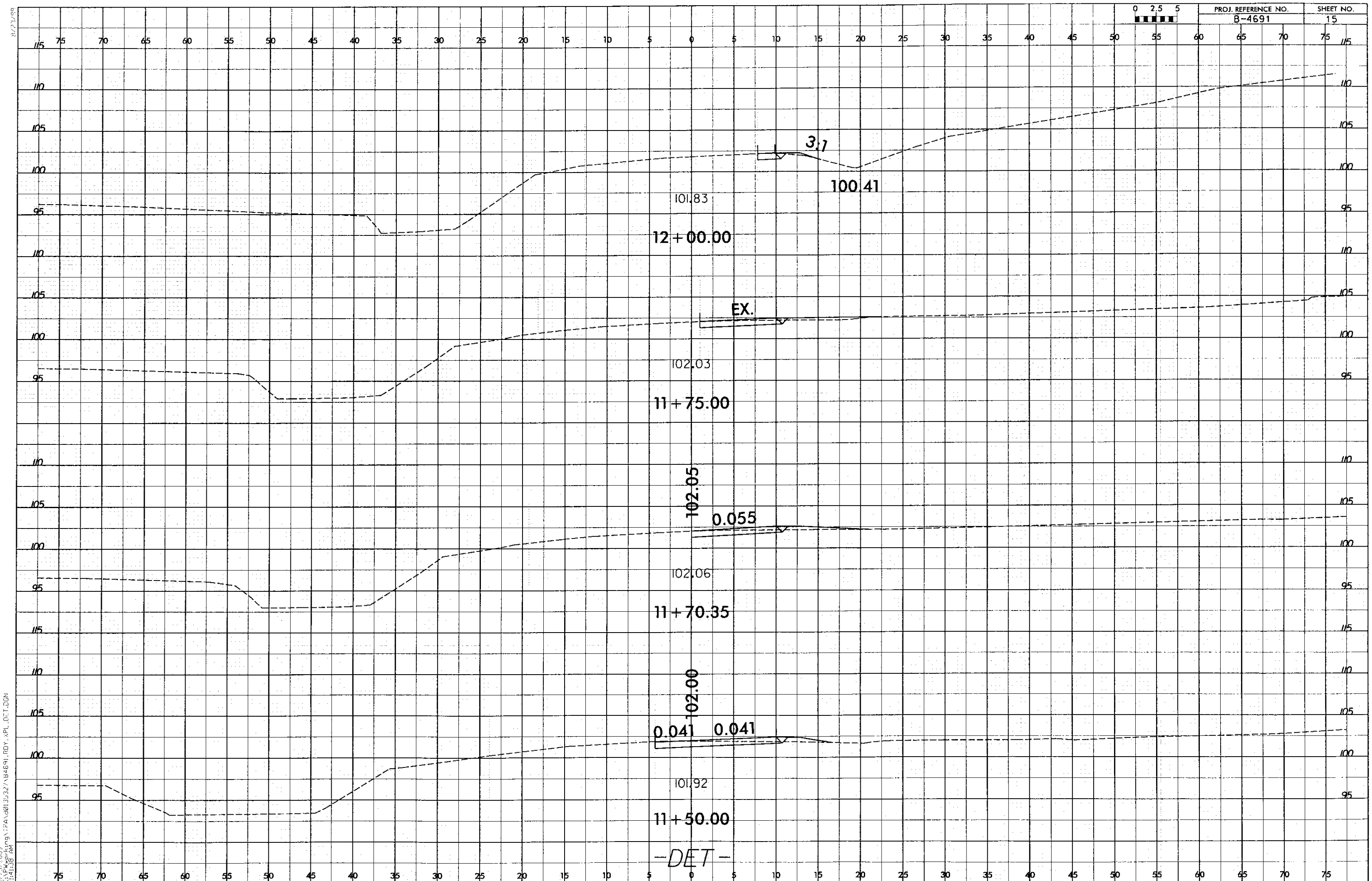
0 2.5 5
PROJ. REFERENCE NO.
B-4691
SHEET NO.
15
3:1
100.41
101.83
12+00.00
EX.
102.03
11+75.00
102.05
0.055
102.06
11+70.35
102.00
0.041
0.041
101.92
11+50.00
-DET-

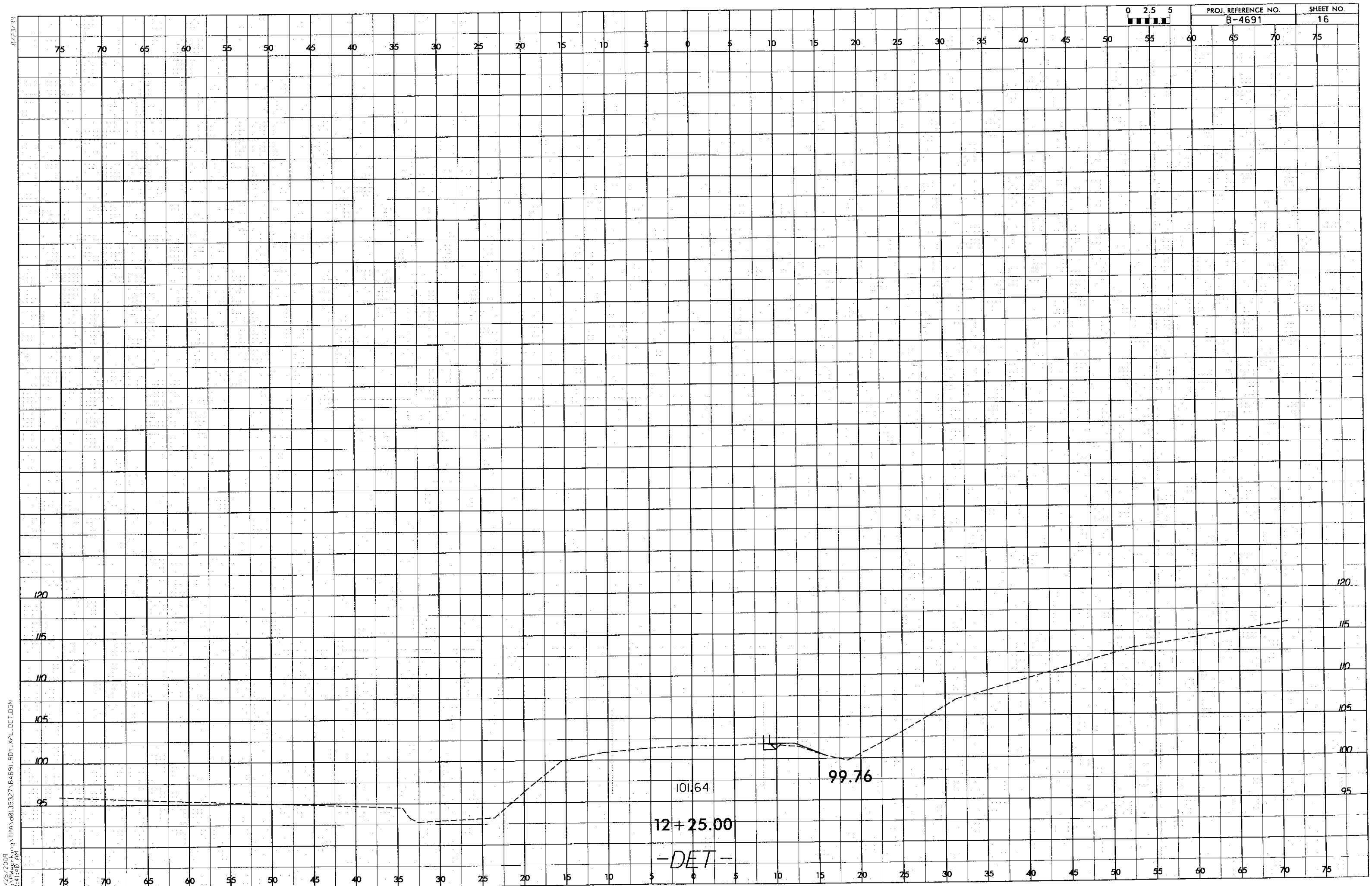

8/23/99
7/25/2003
3:41:40 PM
\\Workking\IPA\d0135327\B4691_RDY_XPL_DET.DGN

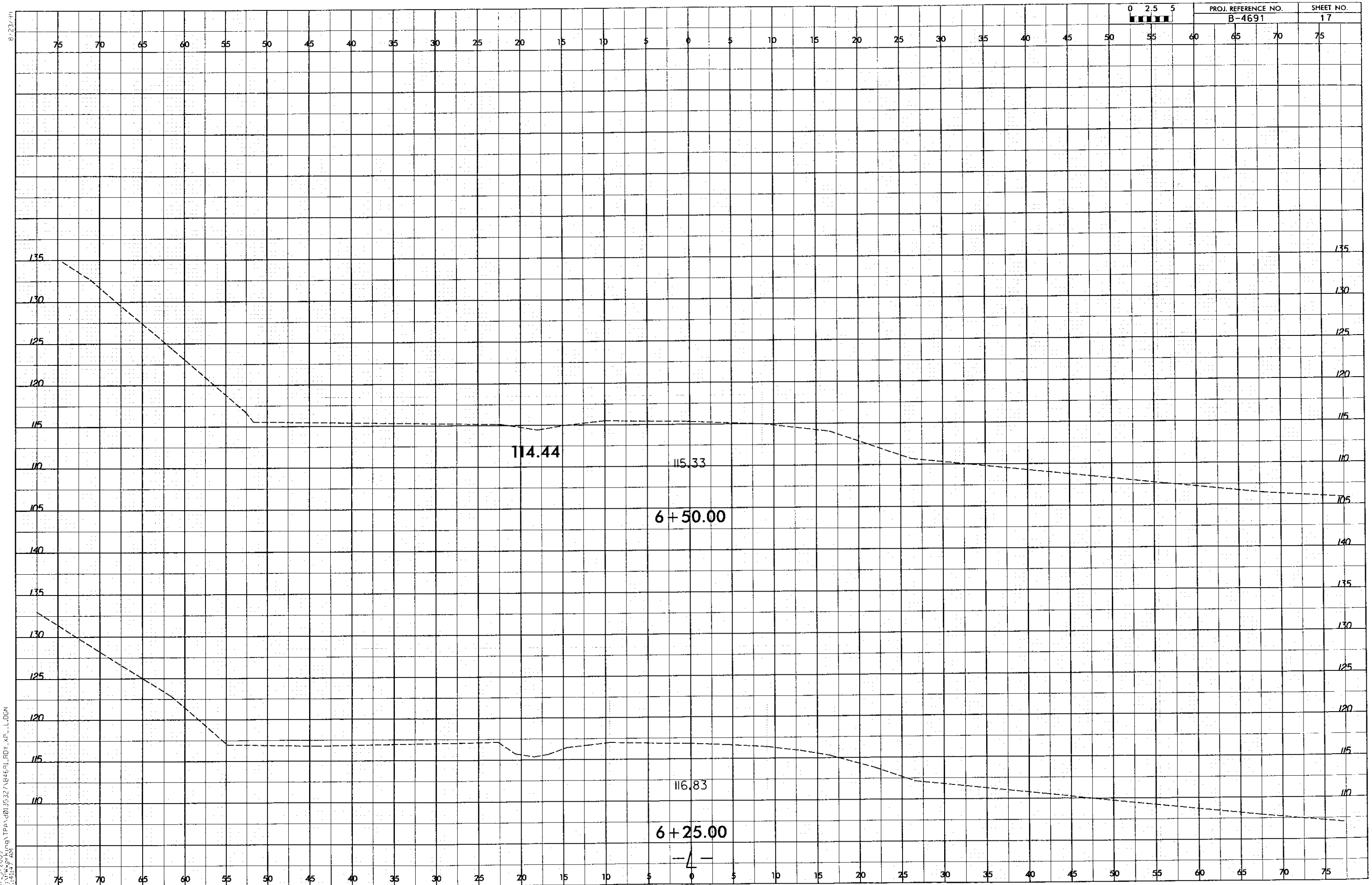
0 2.5 5
PROJ. REFERENCE NO.
B-4691
SHEET NO.
17
114.44
115.33
6+50.00
116.83
6+25.00
-L-

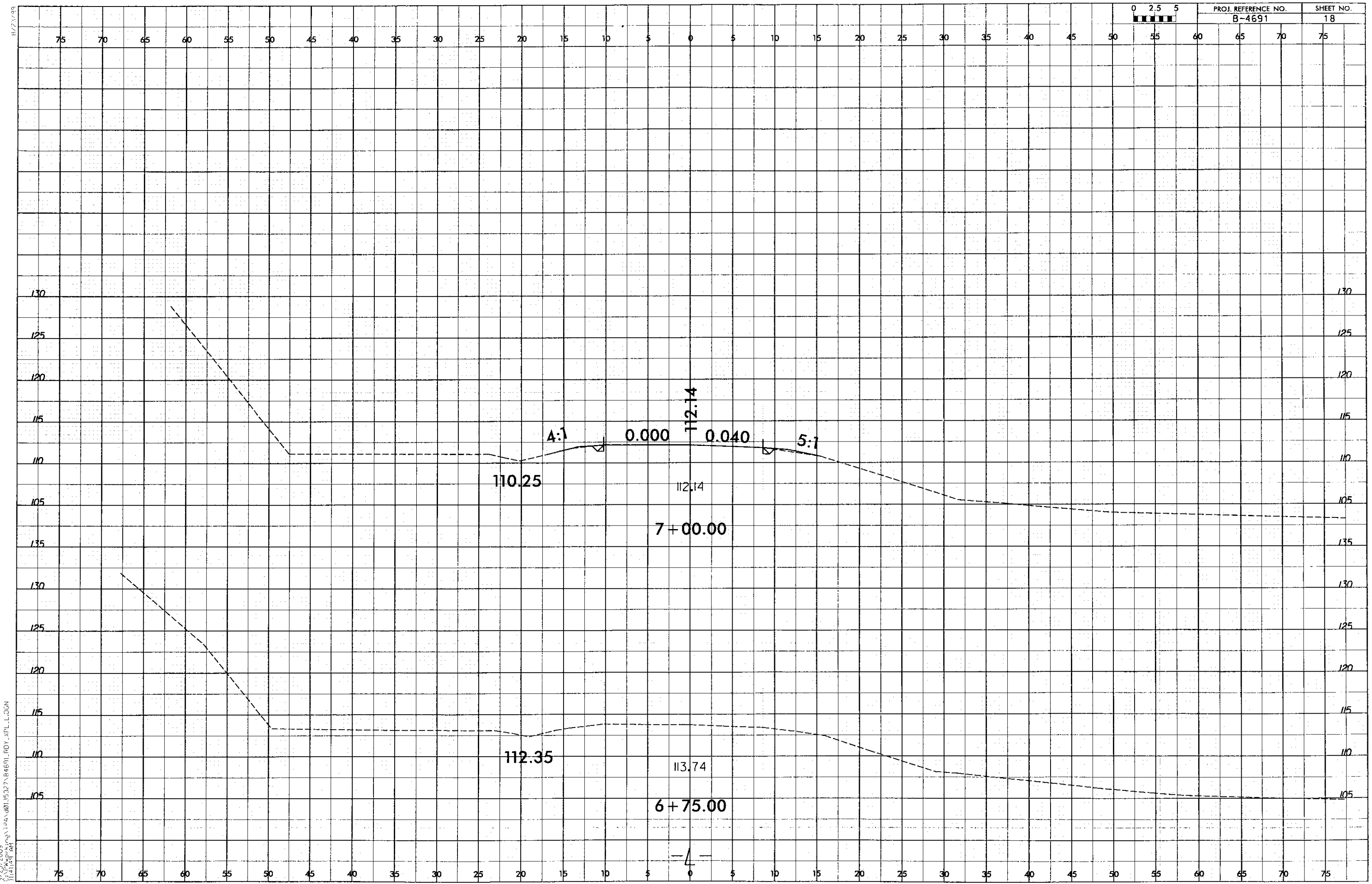
PROJ. REFERENCE NO.
B-4691
SHEET NO.
18
0 2.5 5
4:1
0.000
0.040
5:1
112.14
110.25
112.14
7+00.00
112.35
113.74
6+75.00
-L-

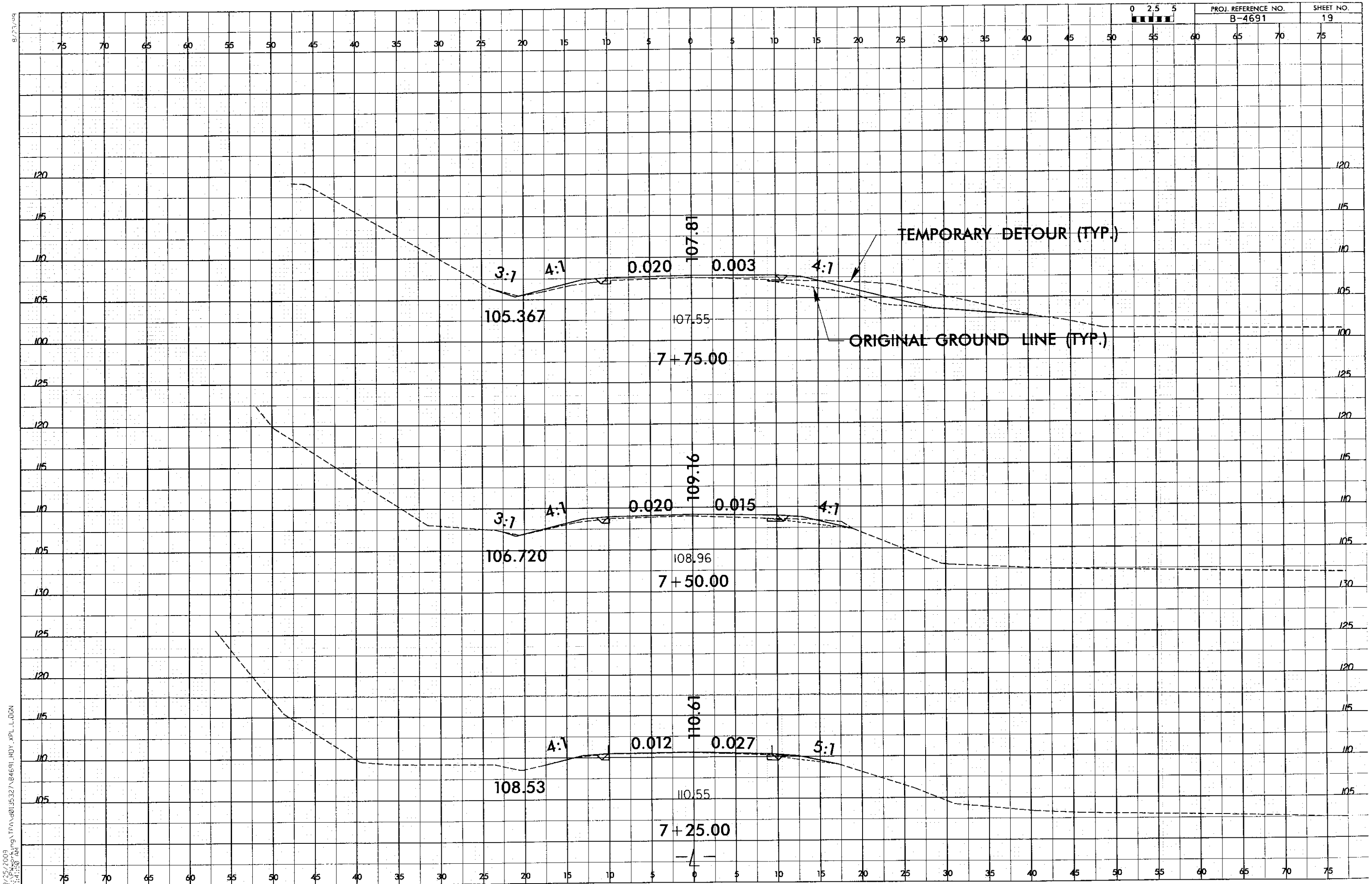
0 2.5 5
TEMPORARY DETOUR (TYP.)
ORIGINAL GROUND LINE (TYP.)
3:1
4:1
0.020
0.003
107.81
105.367
107.55
7+75.00
3:1
4:1
0.020
0.015
109.16
106.720
108.96
7+50.00
4:1
0.012
0.027
5:1
110.61
108.53
110.55
7+25.00

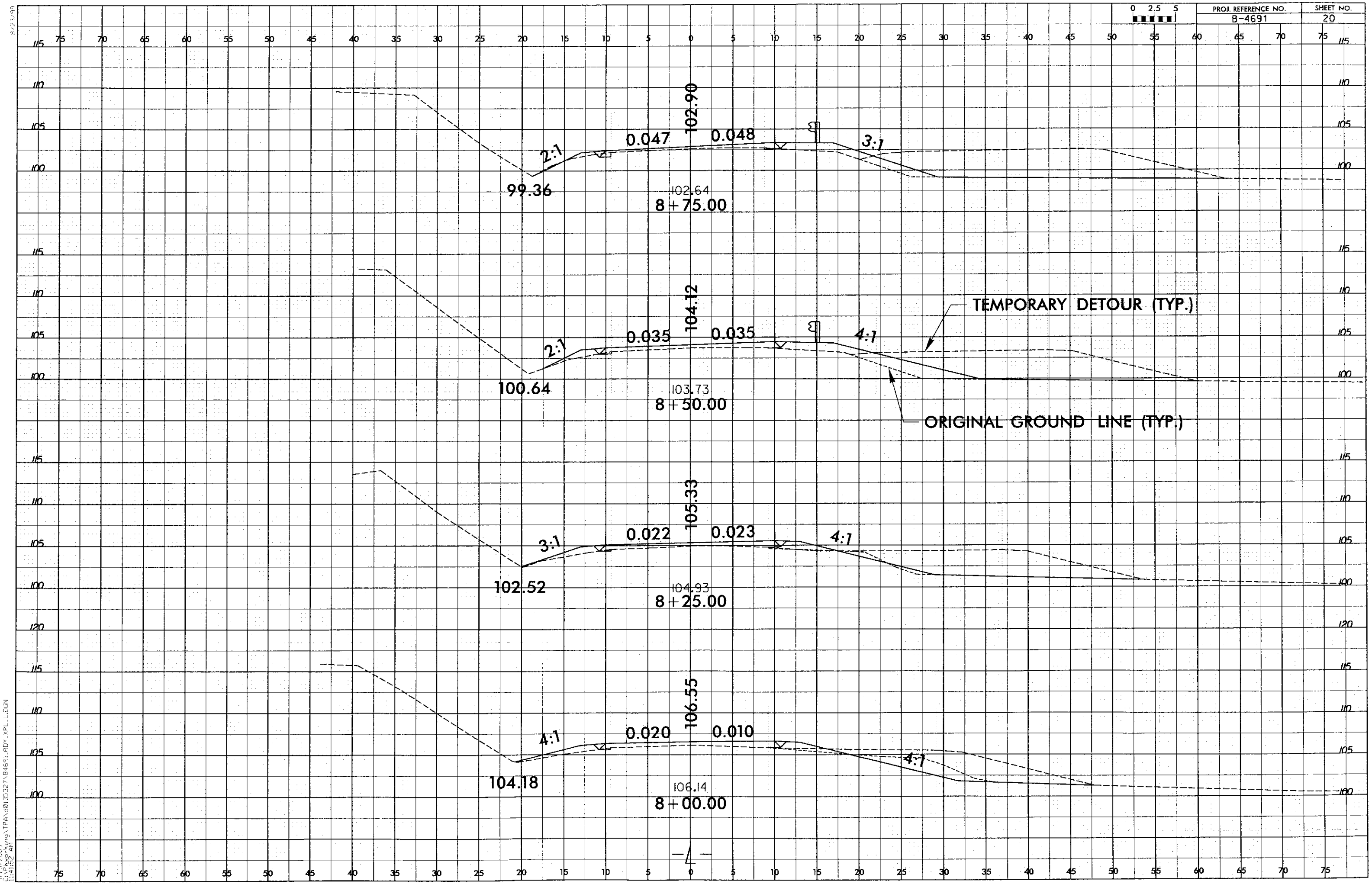
0 2.5 5
102.90
0.047
0.048
2:1
3:1
99.36
102.64
8+75.00
104.12
0.035
0.035
2:1
4:1
100.64
103.73
8+50.00
TEMPORARY DETOUR (TYP.)
ORIGINAL GROUND LINE (TYP.)
105.33
0.022
0.023
3:1
4:1
102.52
104.93
8+25.00
106.55
0.020
0.010
4:1
4:1
104.18
106.14
8+00.00
-L-

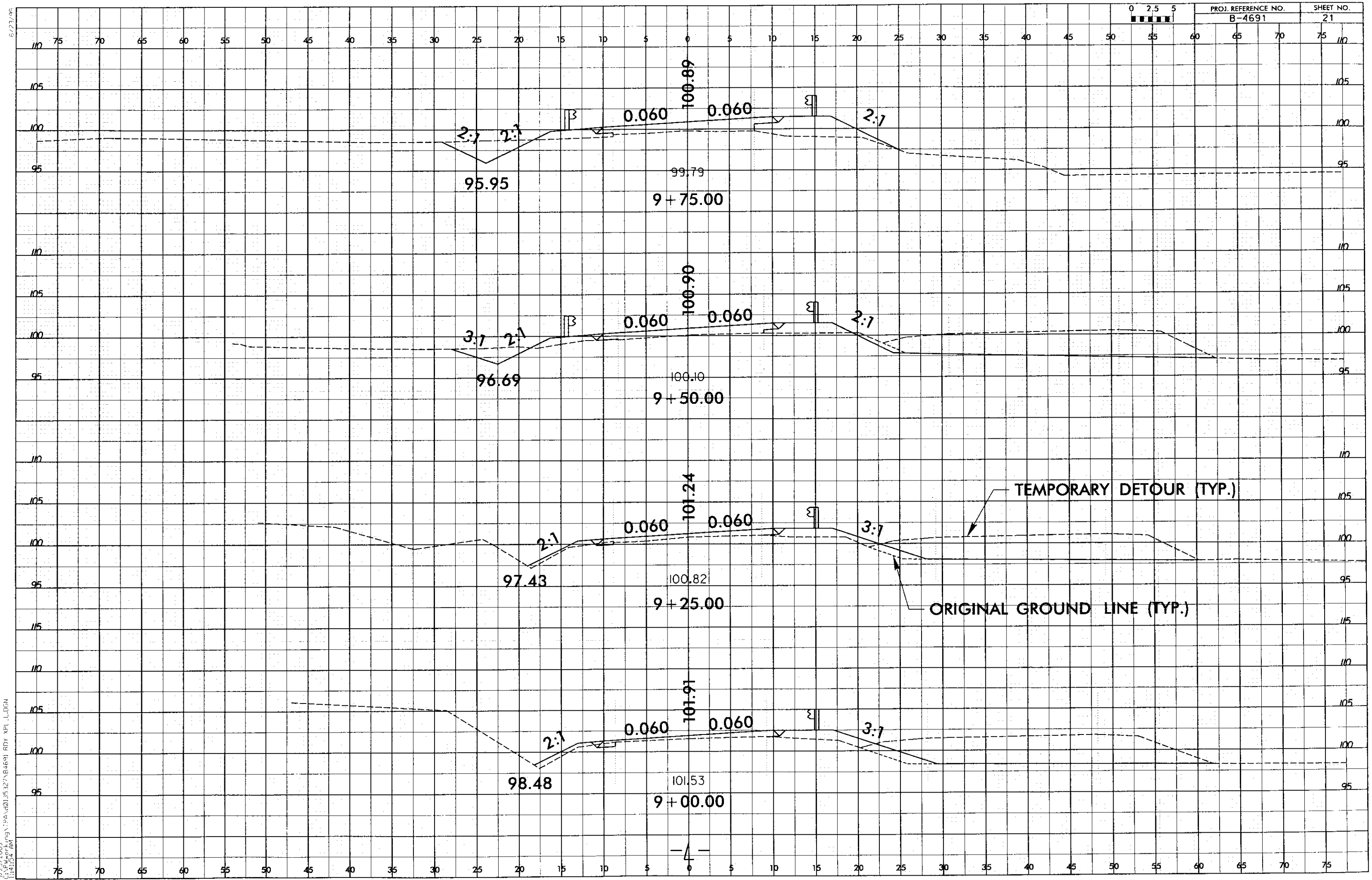
PROJ. REFERENCE NO.
B-4691
SHEET NO.
21
0 2.5 5
100.89
0.060
0.060
2:1
2:1
2:1
95.95
99.79
9+75.00
100.90
0.060
0.060
3:1
2:1
2:1
96.69
100.10
9+50.00
101.24
0.060
0.060
2:1
3:1
97.43
100.82
9+25.00
TEMPORARY DETOUR (TYP.)
ORIGINAL GROUND LINE (TYP.)
101.91
0.060
0.060
2:1
3:1
98.48
101.53
9+00.00

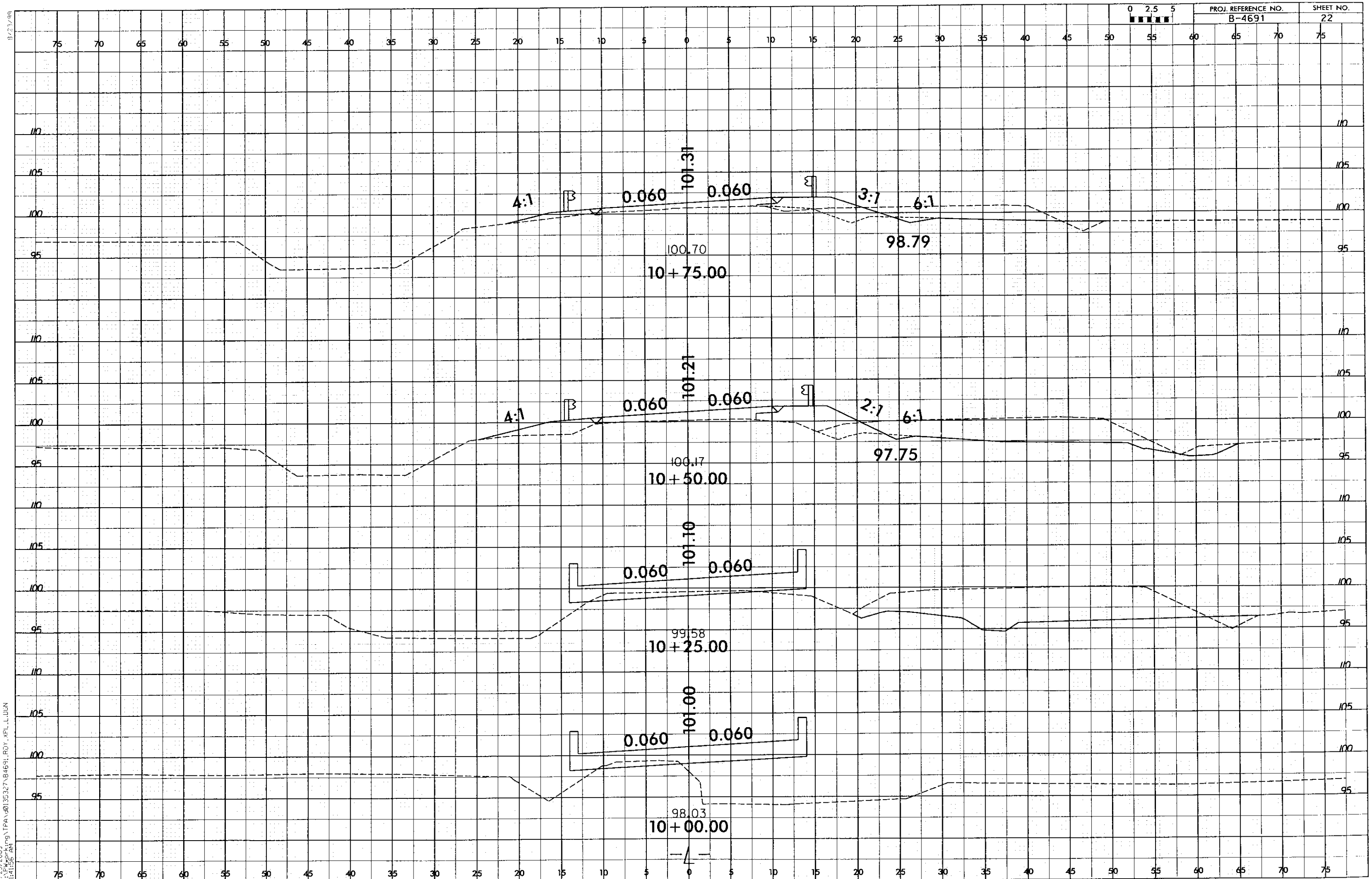
0 2.5 5
PROJ. REFERENCE NO.
B-4691
SHEET NO.
22
101.31
4:1
0.060
0.060
3:1
6:1
100.70
98.79
10+75.00
101.21
4:1
0.060
0.060
2:1
6:1
100.17
97.75
10+50.00
101.10
0.060
0.060
99.58
10+25.00
101.00
0.060
0.060
98.03
10+00.00
-L-

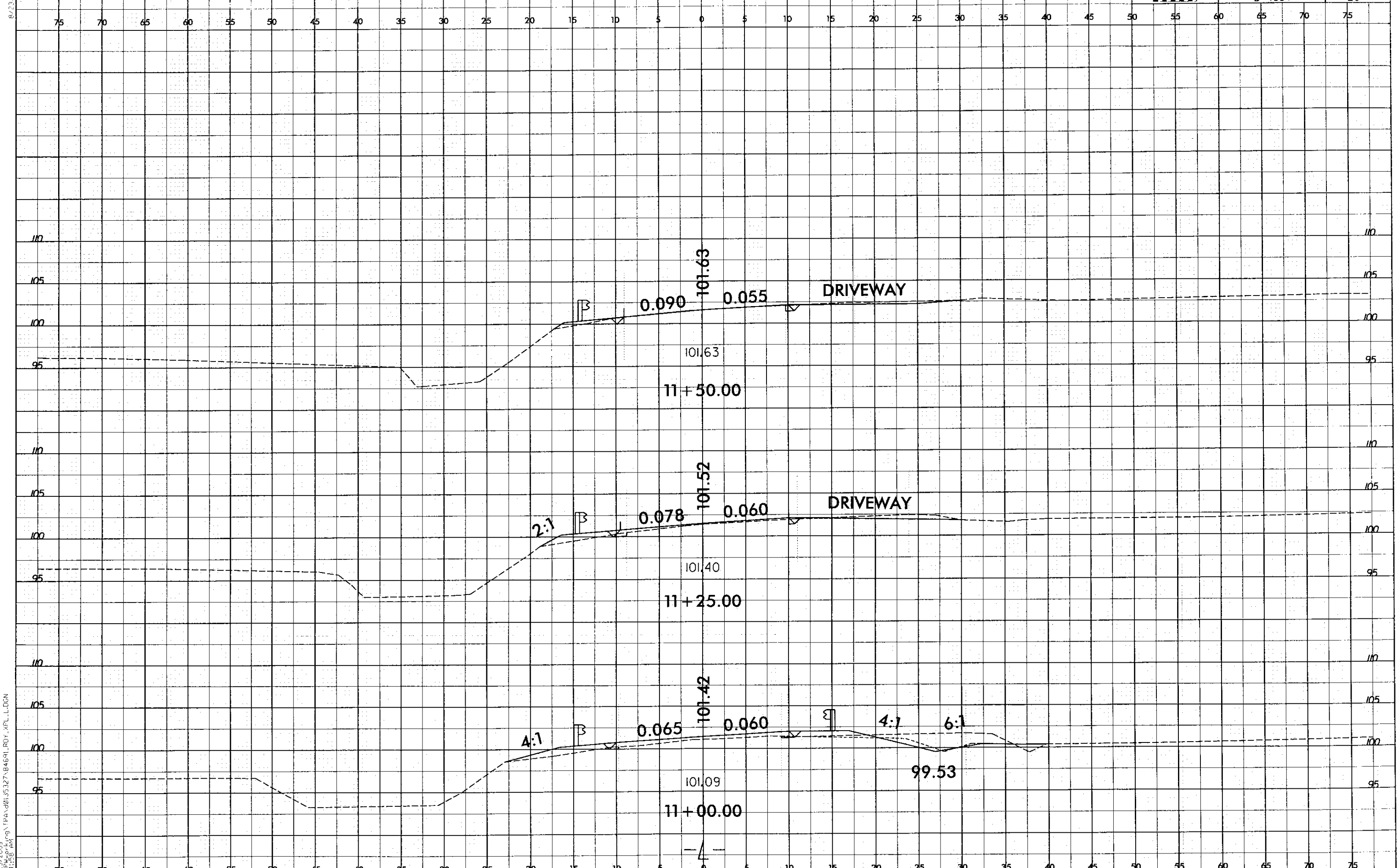

8/23/99
9/25/2009
C:\Pwworking\TPA\d01\35327\B4691_RDY_XPL_L.DGN
11:41:52 AM

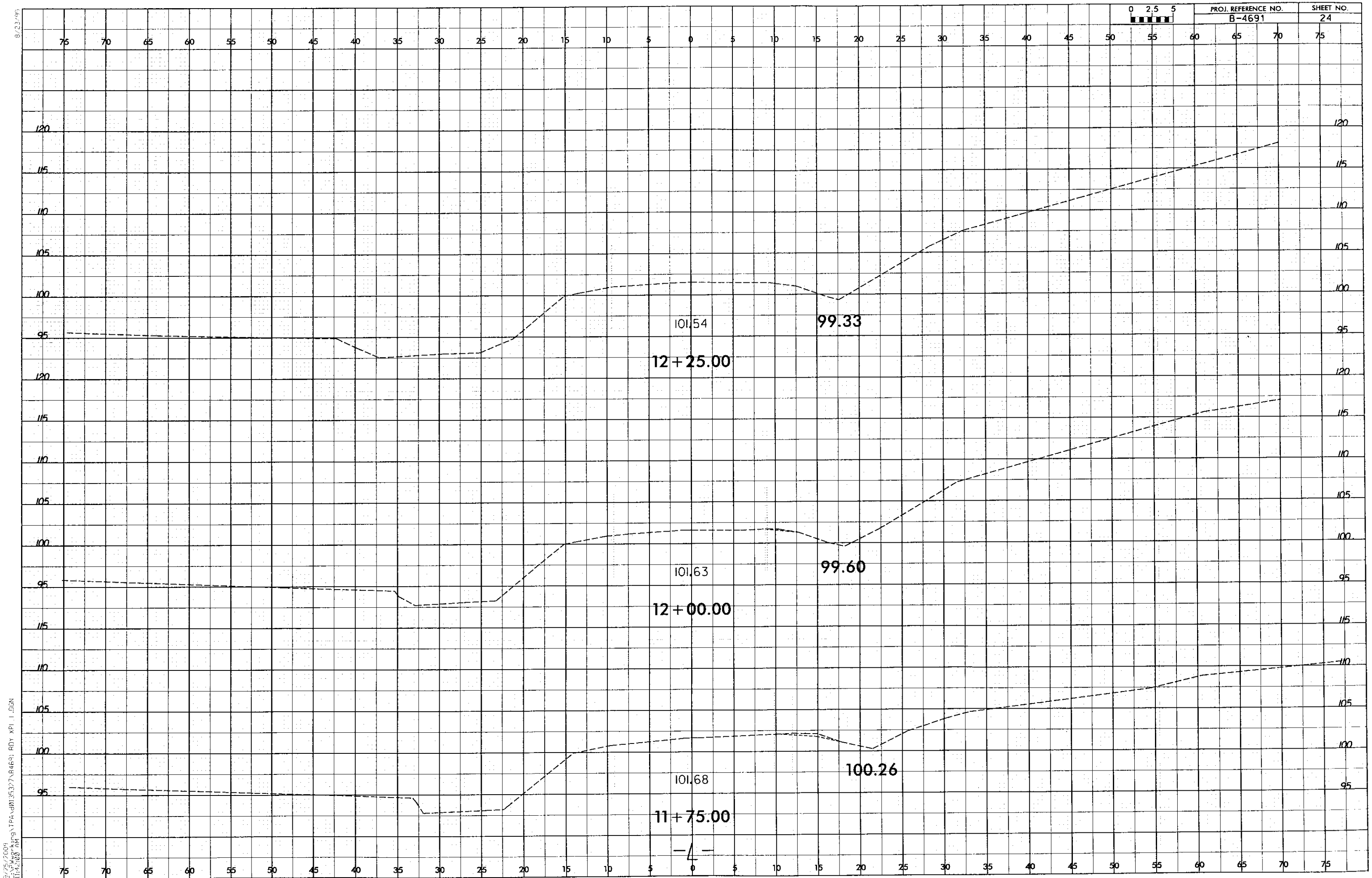
0 2.5 5
PROJ. REFERENCE NO.
B-4691
SHEET NO.
24
101.54
99.33
12+25.00
101.63
99.60
12+00.00
101.68
100.26
11+75.00

NOTES

SEE SHEET 4 OF 4 FOR NOTES.

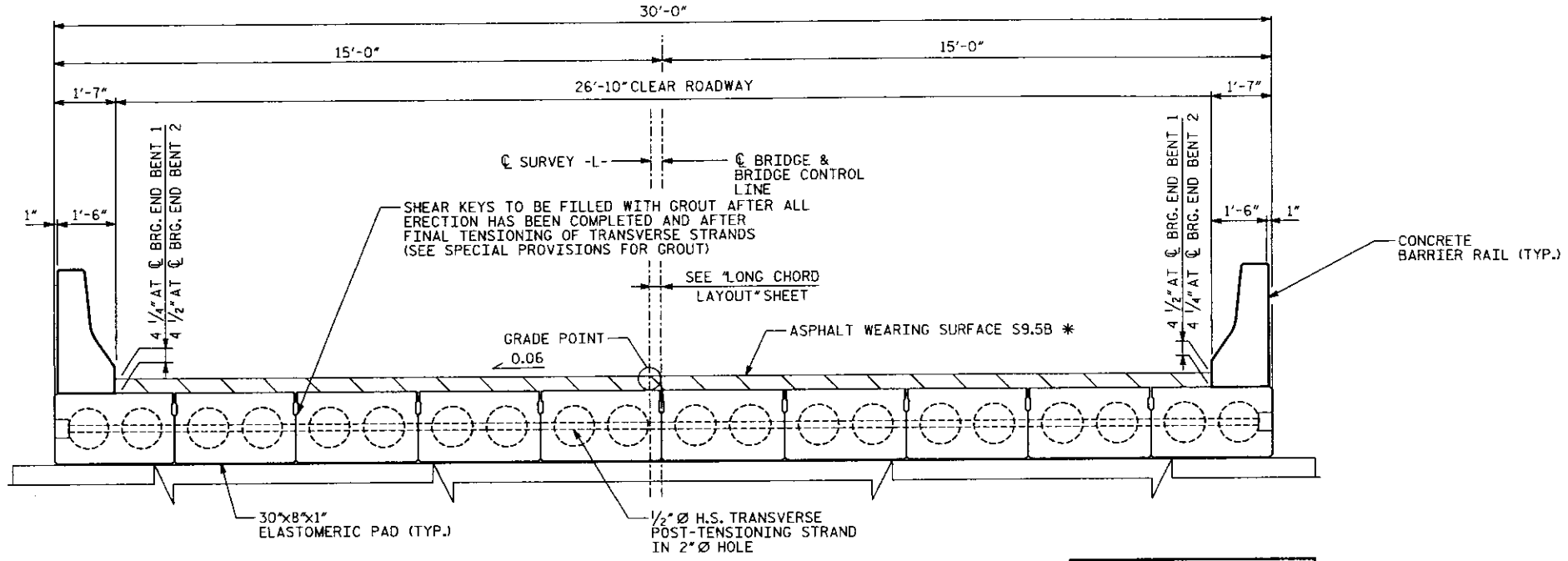

TYPICAL SECTION

* = 1 1/2" (MIN.) AT MID SPAN

DEAD LOAD DEFLECTION AND CAMBER	
EXTERIOR & INTERIOR SLAB UNIT	55'
CAMBER (SLAB ALONE IN PLACE)	2 3/4" (UP)
DEFLECTION (SUPERIMPOSED DEAD LOAD)	1/2" (DOWN) *
FINAL DEFLECTION	2 1/4" (UP)

* INCLUDES FUTURE WEARING SURFACE

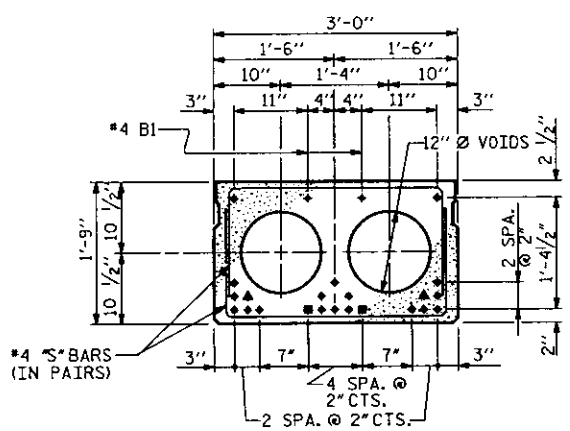

55' SPAN
INTERIOR SLAB SECTION

0.6" Ø H.S. STRANDS
22 TOTAL STRANDS REQ'D.

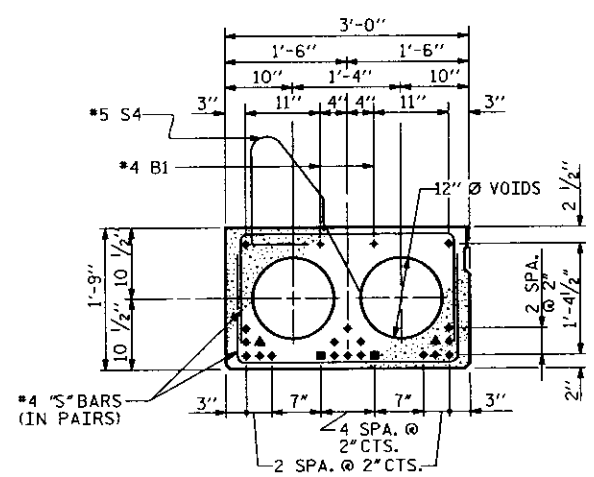

55' SPAN
EXTERIOR SLAB SECTION

0.6" Ø H.S. STRANDS
22 TOTAL STRANDS REQ'D.

◆ DENOTES H.S. STRANDS	■ DEBONDED SHEATHED STRAND. BOND SHALL BE BROKEN ON THESE STRANDS FOR A DISTANCE OF 10'-0" FROM EACH END OF SLAB.	▲ DEBONDED SHEATHED STRAND. BOND SHALL BE BROKEN ON THESE STRANDS FOR A DISTANCE OF 4'-0" FROM EACH END OF SLAB.

PROJECT NO. 33837.1.1

TRANSYLVANIA COUNTY

STATION: 10+11.04 -L-

SHEET 1 OF 4

NORTH CAROLINA PROFESSIONAL SEAL 29589 ENGINEER DOMENIC A. COLETTI
9-24-09

STATE OF NORTH CAROLINA
DEPARTMENT OF TRANSPORTATION
RALEIGH

PRESTRESSED
CORED SLAB
55' SPAN

26'-10" CLEAR ROADWAY-105° SKEW

HDR Engineering, Inc. of the Carolinas
3733 National Drive, Suite 207 Raleigh, N.C. 27612
N.C.B.E.L.S. License Number: F-0116

REVISIONS							
NO.	BY:	DATE:	NO.	BY:	DATE:		SHEET NO. 25
1			3				TOTAL SHEETS 42
2			4				

DRAWN BY : M. SELLS DATE : 03 / 09
CHECKED BY : D. COLETTI DATE : 03 / 09

PLOT DRIVER: HP4500.pmc.eng.50.PLT PENTABLE: B-4691PEN.tbl
USER: dwolfwri DATE: 9/22/2009 TIME: 6:19:12 PM
FILE: North Carolina.Dept.of.Transportation\NCDOT_BMU_Replacements\13.00.NCDOT.File.Structure\B-4691 Transylvania Bridge No.59\Structures\CAD\B4691.SD.CS.01.dgn

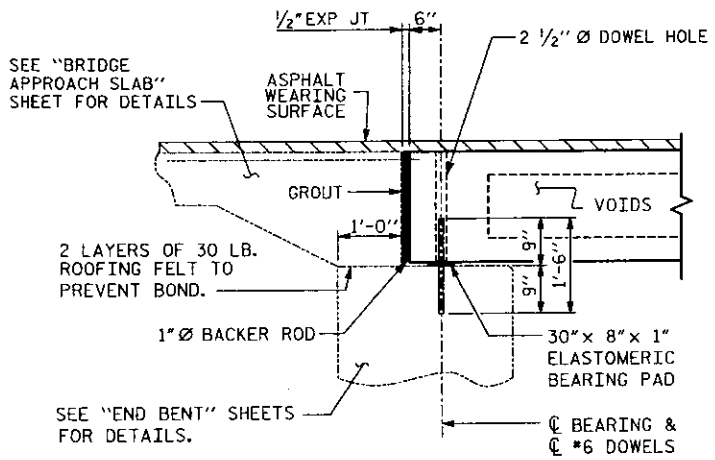

SECTION AT END BENT

(END BENT 1 SHOWN
END BENT 2 SIMILAR)

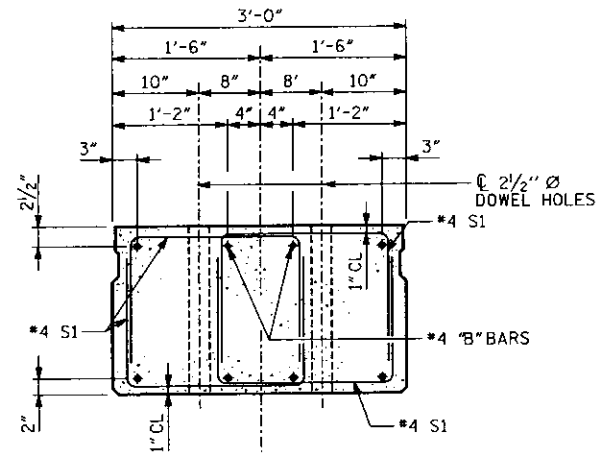

END ELEVATION

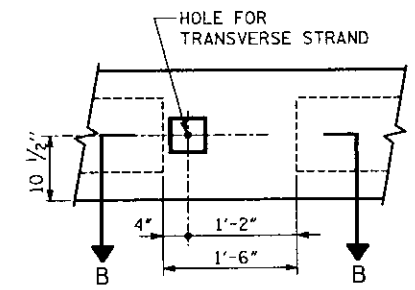

ELEVATION VIEW

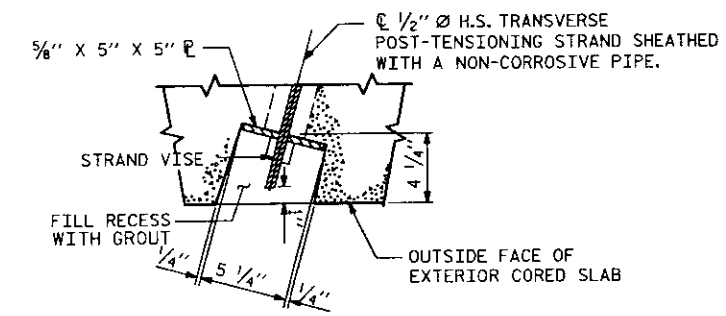

SECTION B-B

DETAIL A

GROUTED RECESS AT END OF POST-TENSIONED STRAND CORED SLABS
FOR LOCATION OF DETAIL, SEE PLAN VIEW OF SPANS

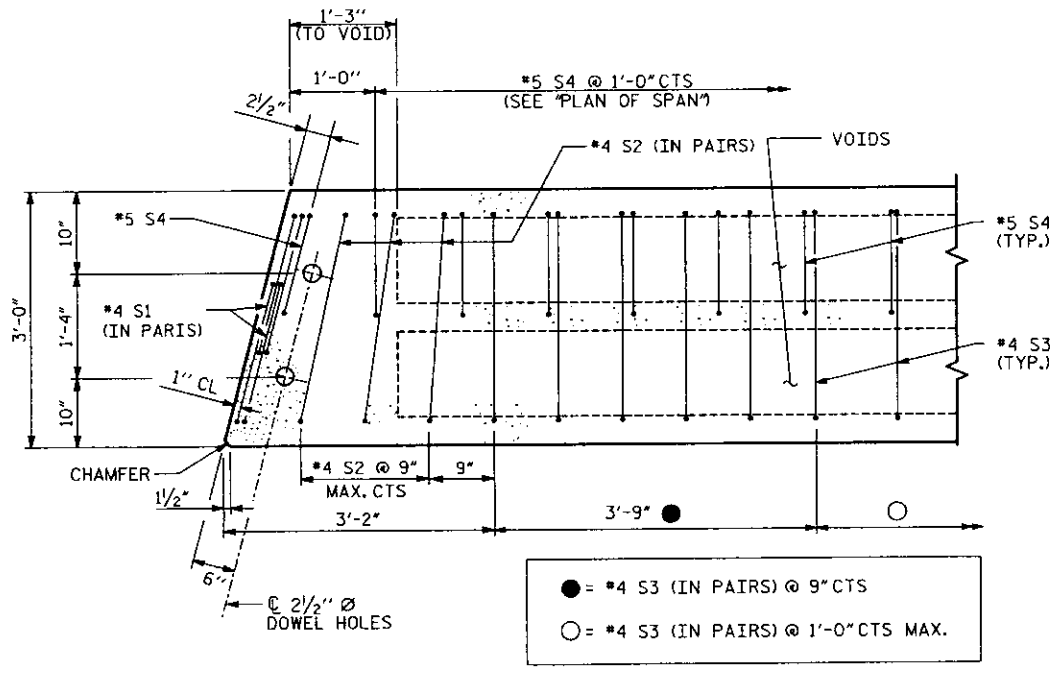

105° SKEW

PART PLAN-SLAB SECTION

(STIRRUP SPACING SYMMETRIC ABOUT UNIT)

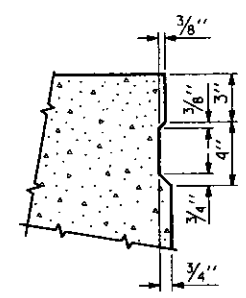

SHEAR KEY DETAIL

NOTE: OMIT SHEAR KEY ON OUTSIDE FACE
OF EXTERIOR CORED SLABS.

PROJECT NO. 33837.1.1

TRANSYLVANIA COUNTY

STATION: 10+11.04 -L-

SHEET 2 OF 4

STATE OF NORTH CAROLINA
DEPARTMENT OF TRANSPORTATION
RALEIGH

PRESTRESSED CORED SLAB 55' SPAN

26'-10" CLEAR ROADWAY-105° SKEW

NORTH CAROLINA PROFESSIONAL SEAL 29589 ENGINEER DOMENIC A. COLETTI
9-24-09

HDR Engineering, Inc. of the Carolinas
3723 National Drive, Suite 207 Raleigh, N.C. 27612
N.C.B.E.L.S. License Number: F-0116

REVISIONS							SHEET NO. 26
NO.	BY:	DATE:	NO.	BY:	DATE:		TOTAL SHEETS 42
1			3				
2			4				

DRAWN BY : M. SELLS DATE : 03 / 09
CHECKED BY : D. COLETTI DATE : 03 / 09

PLOT DRIVER: HP4500_mono.eng.50.PLT PENTABLE: B-4691PEN.tbl
USER: dwainwr1 DATE: 9/22/2009 TIME: 6:19:22 PM
FILE: North Carolina_Dept.of_Transportation\NCDOT_BMU_Replacements\13.00_NCDOT_File_Structure\B-4691 Transylvania Bridge No.59\Structures\CAD\B4691_SD_CS_02.dgn

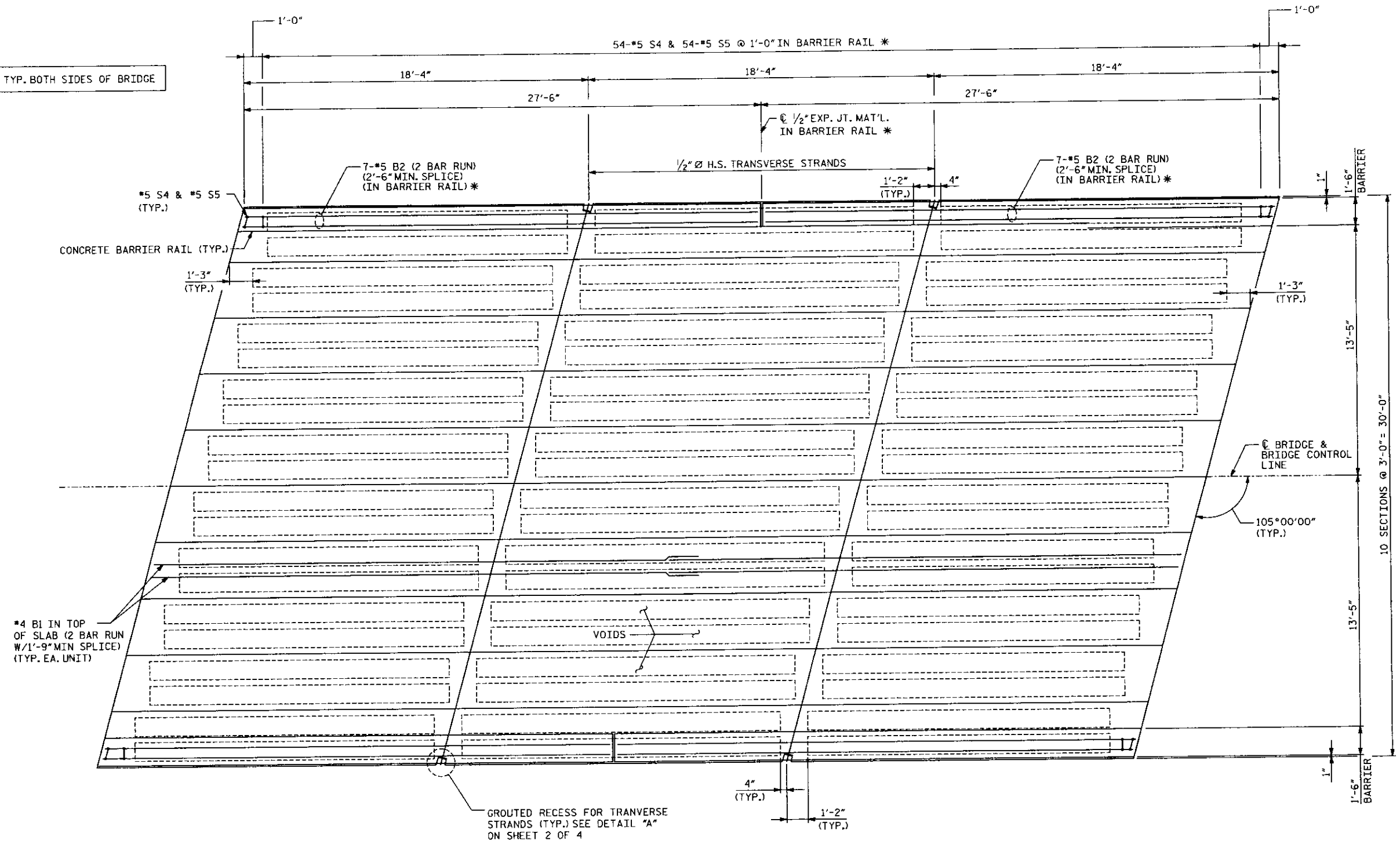

PLAN OF SPAN

PROJECT NO. 33837.1.1

TRANSYLVANIA COUNTY

STATION: 10+11.04 -L-

SHEET 3 OF 4

STATE OF NORTH CAROLINA
DEPARTMENT OF TRANSPORTATION
RALEIGH

PRESTRESSED CORED SLAB 55' SPAN

26'-10" CLEAR ROADWAY-105° SKEW

NORTH CAROLINA PROFESSIONAL SEAL 29589 ENGINEER DOMENIC A. COLETTI 9-24-09

HDR Engineering, Inc. of the Carolinas 3723 National Drive, Suite 202 Raleigh, N.C. 27609 N.C.B.E.L.S. License Number: F-0116

REVISIONS						
NO.	BY:	DATE:	NO.	BY:	DATE:	
1			3			
2			4			

SHEET NO. 27
TOTAL SHEETS 42

DRAWN BY : M. SELLS DATE : 03 / 09
CHECKED BY : D. COLETTI DATE : 03 / 09

PLOT DRIVER: HP4500_mono.eng.50.PLT ┼ PENTABLE: B-4691PEN.tbl
USER: dwalnwrl DATE: 9/22/2009 TIME: 6:19:31 PM
FILE: North Carolina_Dept_of_Transportation\NCDOT.BMU.Replacements\13.00.NCDOT.File.Structure\B-4691 Transylvania Bridge No.59\Structures\CAD\B4691.SD.C5.03.dgn

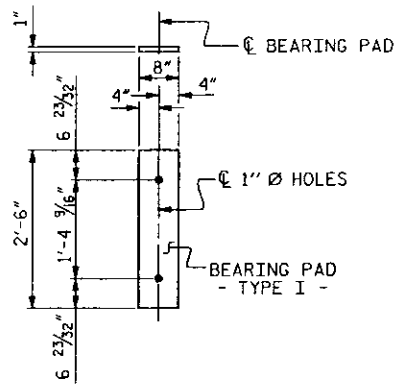

FIXED END
(TYPE I - 20 REQ'D)

ELASTOMERIC BEARING DETAILS

(50 DUROMETER)

BAR TYPES

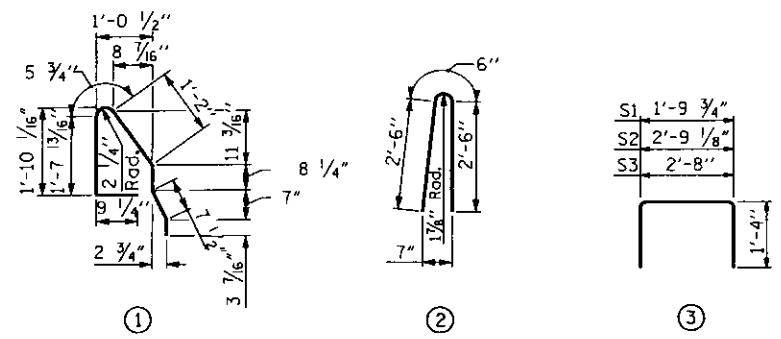

ALL BAR DIMENSIONS ARE OUT TO OUT

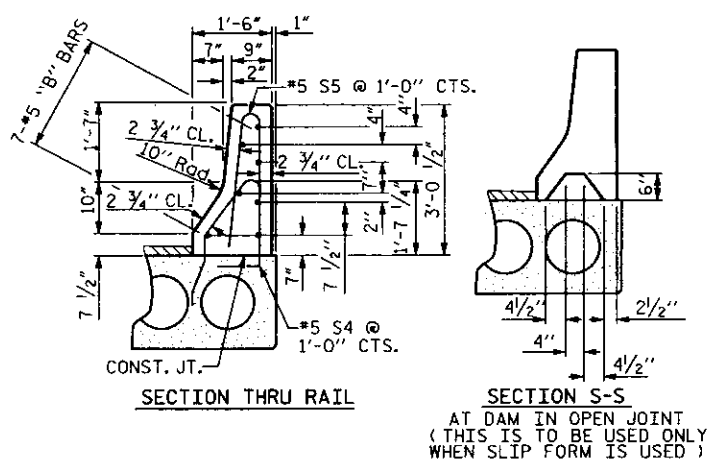

SECTION THRU RAIL

SECTION S-S
AT DAM IN OPEN JOINT
(THIS IS TO BE USED ONLY
WHEN SLIP FORM IS USED)

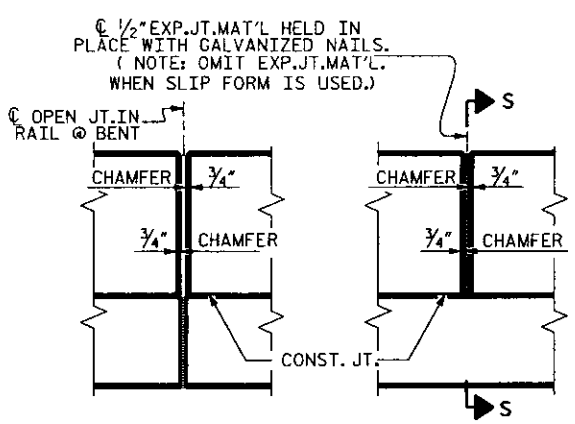

ELEVATION AT EXPANSION JOINTS

BARRIER RAIL DETAILS

BILL OF MATERIAL FOR ONE EXTERIOR CORED SLAB SECTION

BAR	NUMBER	SIZE	TYPE	UNIT LENGTH	UNIT WEIGHT
B1	4	* 4	STR	28'-3"	75
S1	16	* 4	3	4'-6"	48
S2	12	* 4	3	5'-5"	44
S3	106	* 4	3	5'-4"	378
* S4	56	* 5	1	5'-8"	331
REINFORCING STEEL				LBS.	545
* EPOXY COATED REINFORCING STEEL				LBS.	331
7,000 P.S.I. CONCRETE				CU. YDS.	7.8
0.6" Ø L.R. STRANDS				No.	22

BILL OF MATERIAL FOR ONE INTERIOR CORED SLAB SECTION

BAR	NUMBER	SIZE	TYPE	UNIT LENGTH	UNIT WEIGHT
B1	4	* 4	STR	28'-3"	75
S1	16	* 4	3	4'-6"	48
S2	12	* 4	3	5'-5"	44
S3	106	* 4	3	5'-4"	378
REINFORCING STEEL				LBS.	545
7,000 P.S.I. CONCRETE				CU. YDS.	7.8
0.6" Ø L.R. STRANDS				No.	22

GRADE 270 STRANDS

	0.6 "Ø L.R.
AREA (SQUARE INCHES)	0.217
ULTIMATE STRENGTH (LBS. PER STRAND)	58,600
APPLIED PRESTRESS (LBS. PER STRAND)	43,950

CORED SLABS REQUIRED

	NUMBER	LENGTH	TOTAL LENGTH
EXTERIOR C.S.	2	55'-0"	110'-0"
INTERIOR C.S.	8	55'-0"	440'-0"
TOTAL	10	-	550'-0"

BILL OF MATERIAL FOR CONCRETE BARRIER RAIL

BAR	TOTAL NO.	SIZE	TYPE	LENGTH	WEIGHT
* B2	56	#5	STR	15'-1"	881
* S5	112	# 5	2	5'- 6"	642
* EPOXY COATED REINFORCING STEEL				LBS.	1523
CLASS AA CONCRETE				CU.YDS.	13.3
TOTAL LIN. FT. OF CONCRETE BARRIER RAIL					110.00

NOTES

ASSUMED LIVE LOAD = HL93 OR ALTERNATE LOADING.

ALL PRESTRESSING STRANDS SHALL BE 7-WIRE LOW RELAXATION GRADE 270 STRANDS AND SHALL CONFORM TO AASHTO M203 EXCEPT FOR SAMPLING REQUIREMENTS WHICH SHALL BE IN ACCORDANCE WITH THE STANDARD SPECIFICATIONS.

ALL REINFORCING STEEL CAST WITH THE CORED SLAB SECTIONS SHALL BE GRADE 60 AND SHALL BE INCLUDED IN THE UNIT PRICE BID FOR PRESTRESSED CONCRETE CORED SLABS.

RECESSES FOR TRANSVERSE STRANDS SHALL BE GROUTED AFTER THE TENSIONING OF THE STRANDS.

THE 2½" Ø DOWEL HOLES AT FIXED ENDS OF SLAB SECTIONS SHALL BE FILLED WITH GROUT. THE 2½" Ø DOWEL HOLES AT EXPANSION ENDS OF SLAB SECTIONS SHALL BE FILLED WITH JOINT SEALER MATERIAL TO 1½" ABOVE THE TOP OF DOWELS AND THEN FILLED WITH GROUT.

WHEN CORED SLABS ARE CAST, A POSITIVE HOLD-DOWN SYSTEM SHALL BE EMPLOYED TO PREVENT VOIDS FROM RISING OR MOVING SIDEWAYS. THIS SYSTEM SHALL BE DESIGNED TO BE LEFT IN PLACE UNTIL THE CONCRETE HAS REACHED RELEASE STRENGTH. AT LEAST THREE WEEKS PRIOR TO CASTING CORED SLABS, THE CONTRACTOR SHALL SUBMIT TO THE ENGINEER FOR REVIEW AND COMMENT, DETAILED DRAWINGS OF THE PROPOSED HOLD-DOWN SYSTEM. IN ADDITION TO STRUCTURAL DETAILS, LOCATION AND SPACING OF THE HOLD-DOWNS SHALL BE INDICATED.

THE TRANSFER OF LOAD FROM THE ANCHORAGES TO THE CORED SLAB UNIT SHALL BE DONE WHEN THE CONCRETE HAS REACHED A COMPRESSIVE STRENGTH OF NOT LESS THAN 5000 PSI.

ALL REINFORCING STEEL IN BARRIER RAILS SHALL BE EPOXY COATED.

PRESTRESSING STRANDS SHALL BE CUT FLUSH WITH THE CORED SLAB UNIT ENDS.

APPLY EPOXY PROTECTIVE COATING TO CORED SLAB UNIT ENDS.

VERTICAL GROOVED CONTRACTION JOINTS, ½" IN DEPTH, SHALL BE TOOLED IN ALL EXPOSED FACES OF THE BARRIER RAIL AND IN ACCORDANCE WITH ARTICLE 825-10(B) OF THE STANDARD SPECIFICATIONS. A VERTICAL CONTRACTION JOINT SHALL BE LOCATED AT EACH THIRD POINT BETWEEN BARRIER RAIL EXPANSION JOINTS. ONLY ONE CONTRACTION JOINT IS REQUIRED AT MIDPOINT OF BARRIER RAIL SEGMENTS LESS THAN 20 FEET IN LENGTH AND NO CONTRACTION JOINTS ARE REQUIRED FOR THOSE SEGMENTS LESS THAN 10 FEET IN LENGTH.

FOR PRESTRESSED CONCRETE MEMBERS, SEE SPECIAL PROVISIONS.

PROJECT NO. 33837.1.1
TRANSYLVANIA COUNTY
STATION: 10+11.04 -L-

SHEET 4 OF 4

NORTH CAROLINA PROFESSIONAL SEAL 29589 ENGINEER DOMENIC A. COLETTI
9-24-09

STATE OF NORTH CAROLINA
DEPARTMENT OF TRANSPORTATION
RALEIGH

PRESTRESSED CORED SLAB DETAILS

26'-10" CLEAR ROADWAY-105° SKEW

REVISIONS						SHEET NO. 28
NO.	BY:	DATE:	NO.	BY:	DATE:	TOTAL SHEETS 42
1			3			
2			4			

HDR Engineering, Inc. of the Carolinas
1733 National Drive, Suite 202 Raleigh, N.C. 27615
N.C.B.E.L.S. License Number: F-0116

DRAWN BY : M. SELLS DATE : 03 / 09
CHECKED BY : D. COLETTI DATE : 03 / 09

PLOT DRIVER: HP4500_mono_eng.50.PLT PENTABLE: B-4691PEN.tbl
USER: dwalnwrl DATE: 9/22/2009 TIME: 6:19:40 PM
FILE: North Carolina.Dept of Transportation\NCDOT.BMU.Replacements\13.00.NCDOT.File.Structure\B-4691 Transylvania Bridge No.59\Structures\CAD\B4691.SD.CS.04.dgn

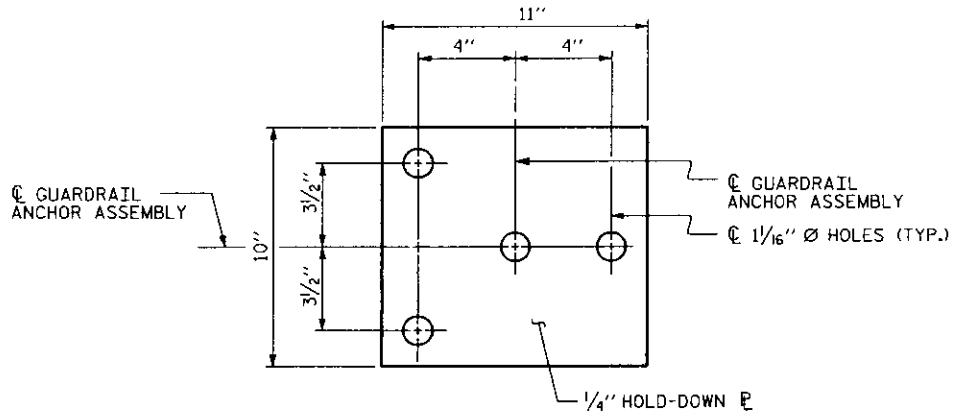

PLAN

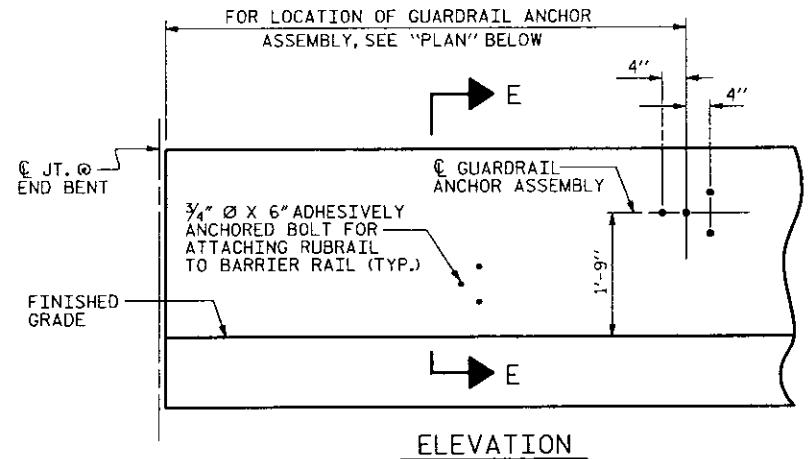

ELEVATION

FOR LOCATION OF RUBRAIL, SEE ROADWAY STD. 862.03

NOTES

THE GUARDRAIL ANCHOR ASSEMBLY SHALL CONSIST OF A 1/4" HOLD DOWN PLATE AND 4 - 7/8" Ø BOLTS WITH NUTS AND WASHERS, RUBRAIL, AND ADHESIVELY ANCHORED BOLTS.

THE HOLD-DOWN PLATE SHALL CONFORM TO AASHTO M270 GRADE 36. AFTER FABRICATION, THE HOLD-DOWN PLATE SHALL BE HOT-DIP GALVANIZED IN ACCORDANCE WITH AASHTO M111.

BOLTS SHALL CONFORM TO THE REQUIREMENTS OF ASTM A307 AND NUTS SHALL CONFORM TO THE REQUIREMENTS OF AASHTO M291. BOLTS, NUTS AND WASHERS SHALL BE GALVANIZED. (AT THE CONTRACTOR'S OPTION, STAINLESS STEEL BOLTS, NUTS AND WASHERS MAY BE USED AS AN ALTERNATE FOR THE 7/8" Ø GALVANIZED BOLTS, NUTS AND WASHERS. THEY SHALL CONFORM TO OR EXCEED THE MECHANICAL REQUIREMENTS OF ASTM A307. THE USE OF THIS ALTERNATE SHALL BE APPROVED BY THE ENGINEER.)

THE GUARDRAIL ANCHOR ASSEMBLY IS REQUIRED AT ALL POINTS WHERE APPROACH GUARDRAIL IS TO BE ATTACHED TO THE END OF BARRIER RAIL. FOR POINTS OF ATTACHMENT, SEE SKETCH.

AFTER INSTALLATION, THE EXPOSED THREAD OF THE BOLT SHALL BE BURRED WITH A SHARP POINTED TOOL.

THE COST OF THE GUARDRAIL ANCHOR ASSEMBLY SHALL BE INCLUDED IN THE UNIT CONTRACT PRICE BID FOR CONCRETE BARRIER RAIL.

THE 1 1/4" Ø HOLES SHALL BE FORMED OR DRILLED WITH A CORE BIT. IMPACT TOOLS WILL NOT BE PERMITTED. ANY CONCRETE DAMAGED BY THIS WORK SHALL BE REPAIRED TO THE SATISFACTION OF THE ENGINEER.

THE C6 X 8.2 RUBRAIL IS TO BE ADHESIVELY ANCHORED TO THE RAIL USING THREE 3/4"Ø X 6" BOLTS WITH WASHERS. LEVEL ONE FIELD TESTING IS REQUIRED, AND THE YIELD LOAD OF THE 3/4"Ø BOLT IS 12 KIPS. FOR ADHESIVELY ANCHORED ANCHOR BOLTS OR DOWELS, SEE SPECIAL PROVISIONS. SEE ROADWAY STANDARD 862.03 FOR DETAILS AND LOCATION OF THE RUBRAIL.

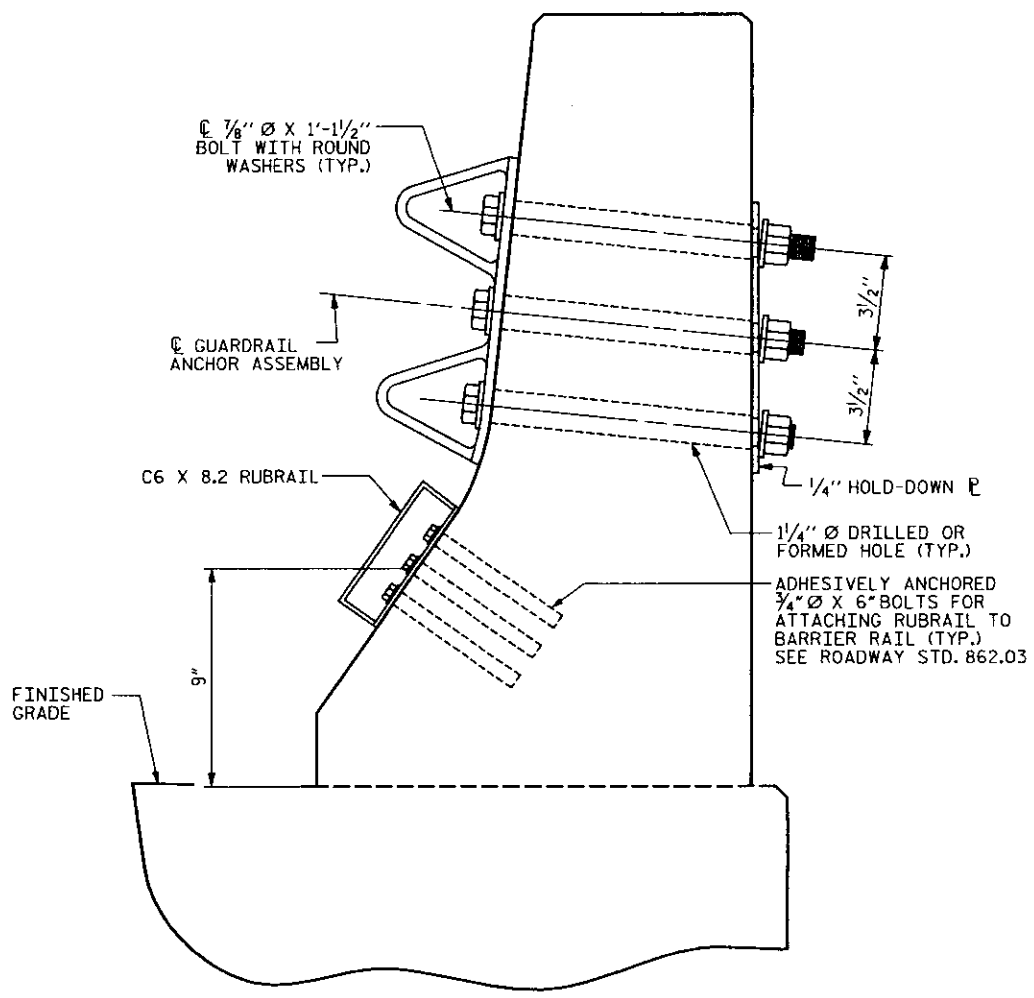

SECTION E-E

GUARDRAIL ANCHOR ASSEMBLY DETAILS

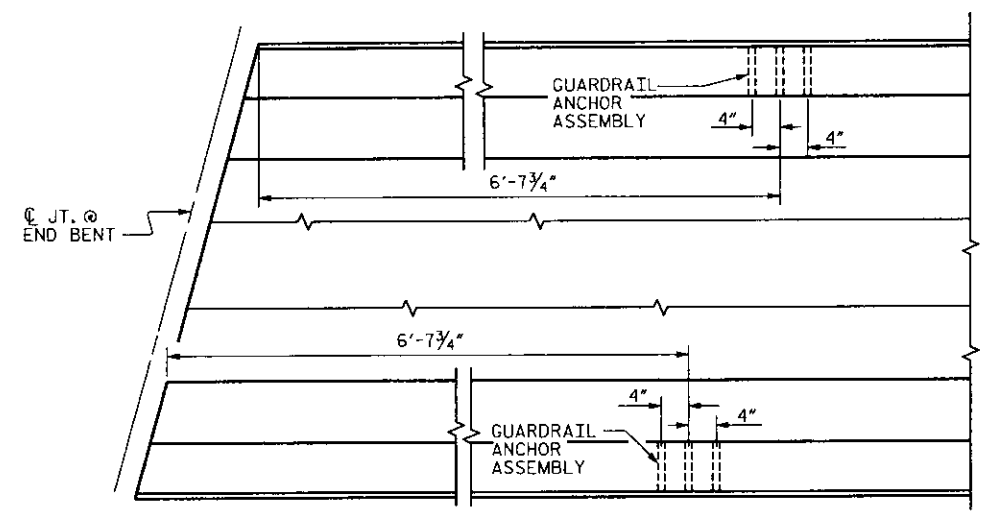

PLAN

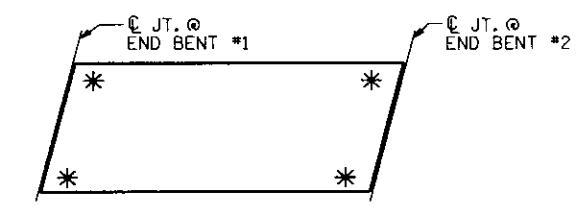

SKETCH SHOWING POINTS OF ATTACHMENTS

✳ DENOTES GUARDRAIL ANCHOR ASSEMBLY

LOCATION OF ANCHORS FOR GUARDRAIL

END BENT #1 SHOWN, END BENT #2 SIMILAR.

PROJECT NO. 33837.1.1

TRANSYLVANIA COUNTY

STATION: 10+11.04 -L-

NORTH CAROLINA PROFESSIONAL SEAL 29589 ENGINEER DOMENIC A. COLETTI 9-24-09

STATE OF NORTH CAROLINA
DEPARTMENT OF TRANSPORTATION
RALEIGH

GUARDRAIL ANCHORAGE FOR BARRIER RAIL

26'-10" CLEAR ROADWAY-105° SKEW

REVISIONS						SHEET NO.
NO.	BY:	DATE:	NO.	BY:	DATE:	29
1			3			TOTAL SHEETS
2			4			42

HDR Engineering, Inc. of the Carolinas 3733 National Drive, Suite 237 Raleigh, N.C. 27612 N.C.B.E.L.S. License Number: F-0116

DRAWN BY : M. SELLS DATE : 03 / 09
CHECKED BY : D. COLETTI DATE : 03 / 09

PLOT DRIVER: HP4500.mono.eng.50.PLT PENTABLE: B-4691PEN.tbl
USER: dwainwrl DATE: 9/22/2009 TIME: 6:19:49 PM
FILE: North Carolina Dept. of Transportation\NCDOT_BMU_Replacements\13.00_NCDOT_File_Structure\B-4691 Transylvania Bridge No.59\Structures\CAD\B4691_SD_GR_01.dgn

NOTES

STIRRUPS IN CAP MAY BE SHIFTED SLIGHTLY AS NECESSARY TO CLEAR DOWELS.

SEE "SUBSTRUCTURE END BENT DETAILS" SHEETS FOR INFORMATION NOT SHOWN.

THE CONCRETE IN THE SHADED AREA OF THE WING SHALL BE POURED AFTER BARRIER RAILS ARE CAST IF SLIP FORMING IS USED.

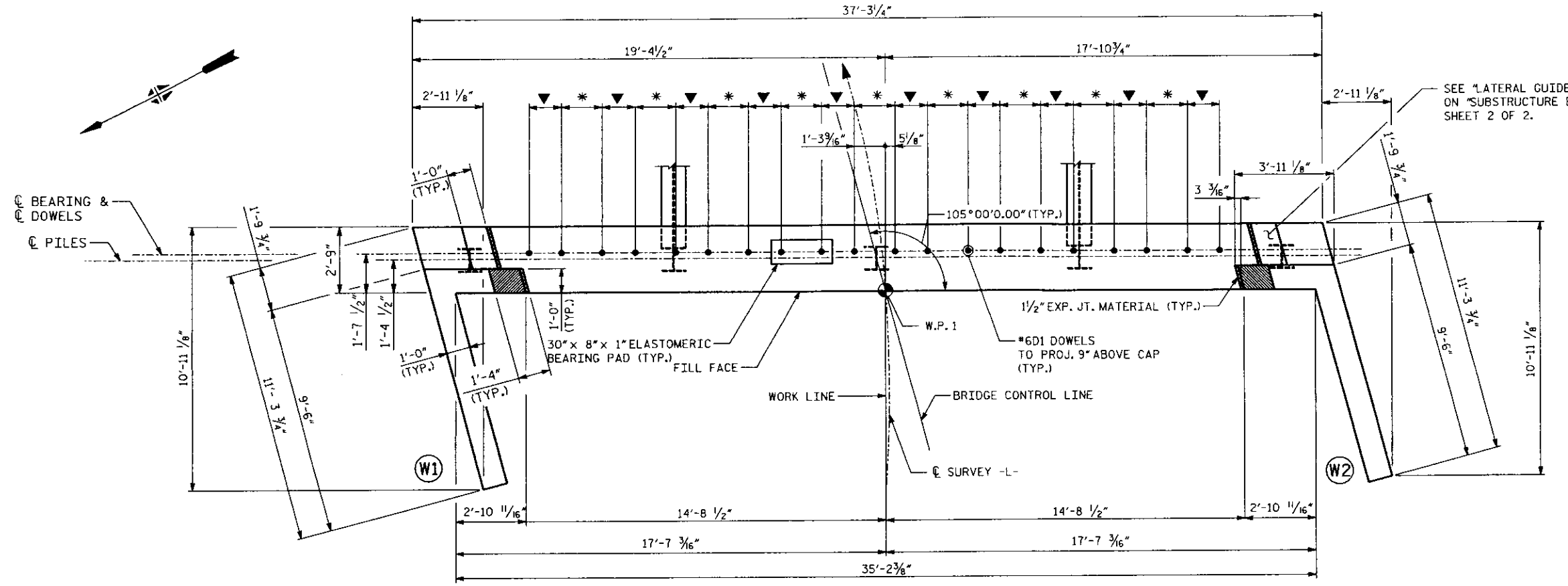

▼ = 1'-4 9/16"
✱ = 1'-8 11/16"

PLAN

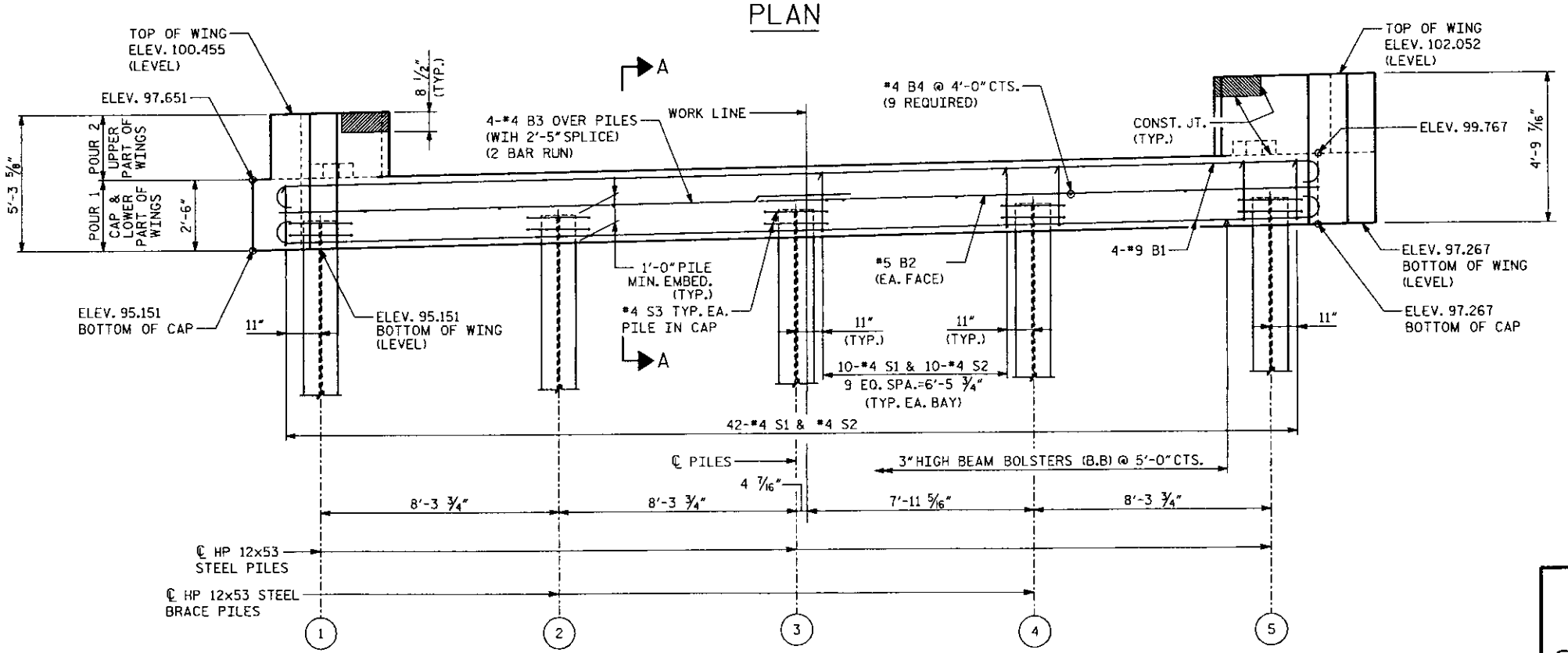

ELEVATION

REINFORCING IN WINGWALLS NOT SHOWN FOR CLARITY. SEE "SUBSTRUCTURE END BENT DETAILS" SHEETS.

(X) DENOTES PILE NUMBER SEE PILE CUT-OFF ELEVATIONS TABLE THIS SHEET.

END BENT 1 PILE CUT-OFF ELEVATIONS				
PILE 1	PILE 2	PILE 3	PILE 4	PILE 5
96.286	96.758	97.230	97.701	98.173

PROJECT NO. 33837.1.1

TRANSYLVANIA COUNTY

STATION: 10+11.04 -L-

STATE OF NORTH CAROLINA
DEPARTMENT OF TRANSPORTATION
RALEIGH

SUBSTRUCTURE END BENT 1

26'-10" CLEAR ROADWAY-105° SKEW

NORTH CAROLINA PROFESSIONAL SEAL 29569 ENGINEER DOMENIC A. COLETTI 9-24-09

HDR Engineering, Inc. of the Carolinas 3733 National Drive, Suite 207 Raleigh, N.C. 27612 N.C.B.E.L.S. License Number: F-0116

REVISIONS						
NO.	BY:	DATE:	NO.	BY:	DATE:	
1			3			
2			4			

SHEET NO. 30 TOTAL SHEETS 42

DRAWN BY : M. SELLS DATE : 03 / 09
CHECKED BY : D. COLETTI DATE : 03 / 09

PLOT DRIVER: HP4500_mono_eng_50.PLT PENTABLE: B-4691PEN.tbl
USER: dwainwri DATE: 9/22/2009 TIME: 6:19:58 PM
FILE: North Carolina_Dept_of_Transportation\NCDOT_BMU_Replacements\13.00_NCDOT_File_Structure\B-4691 Transylvania Bridge No.59\Structures\CAD\B4691_SD_E1_01.dgn

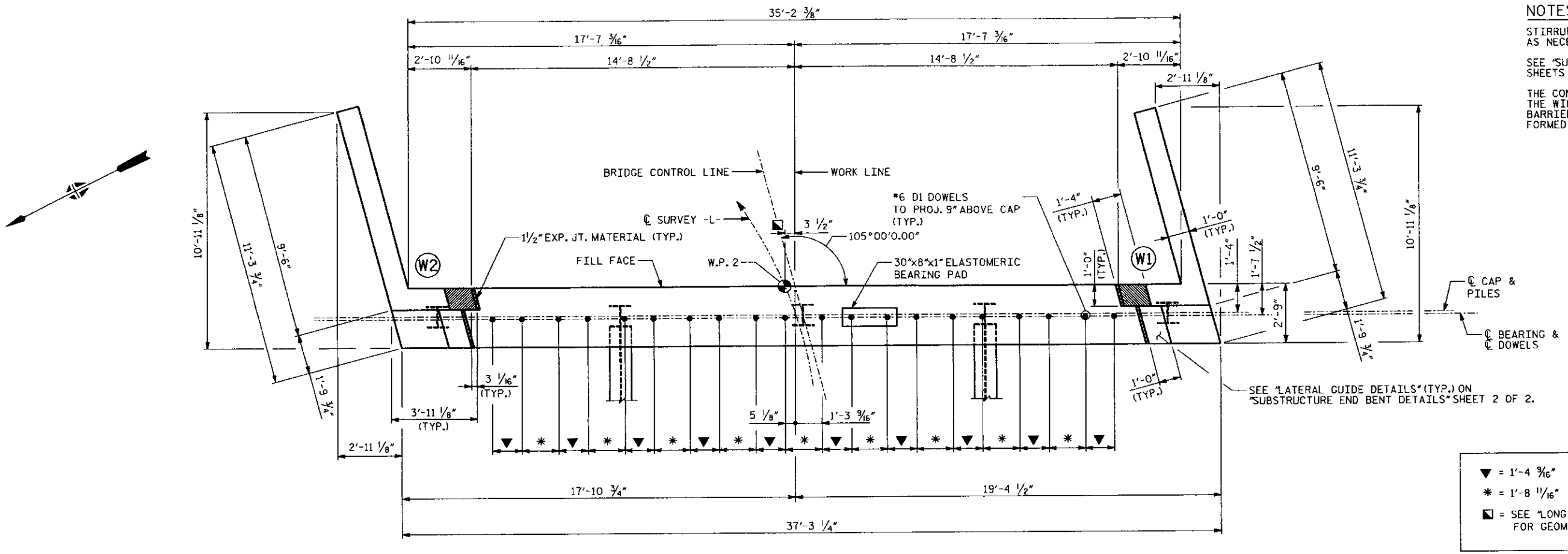

PLAN

NOTES

STIRRUPS IN CAP MAY BE SHIFTED SLIGHTLY AS NECESSARY TO CLEAR DOWELS.

SEE "SUBSTRUCTURE END BENT DETAILS" SHEETS FOR INFORMATION NOT SHOWN.

THE CONCRETE IN THE SHADED AREA OF THE WING SHALL BE POURED AFTER THE BARRIER RAILS ARE CAST IF SLIP FORMED IS USED.

▼ = 1'-4 9/16"

✱ = 1'-8 11/16"

◪ = SEE "LONG CHORD LAYOUT" FOR GEOMETRY NOT SHOWN.

THE CONTRACTOR'S ATTENTION IS CALLED TO THE FACT THAT THE DIMENSIONS LOCATING END BENT 2 ARE OFFSET FROM THE BRIDGE CONTROL LINE.

END BENT 2
PILE CUT-OFF ELEVATIONS

PILE 1	PILE 2	PILE 3	PILE 4	PILE 5
96.522	96.994	97.466	97.937	98.409

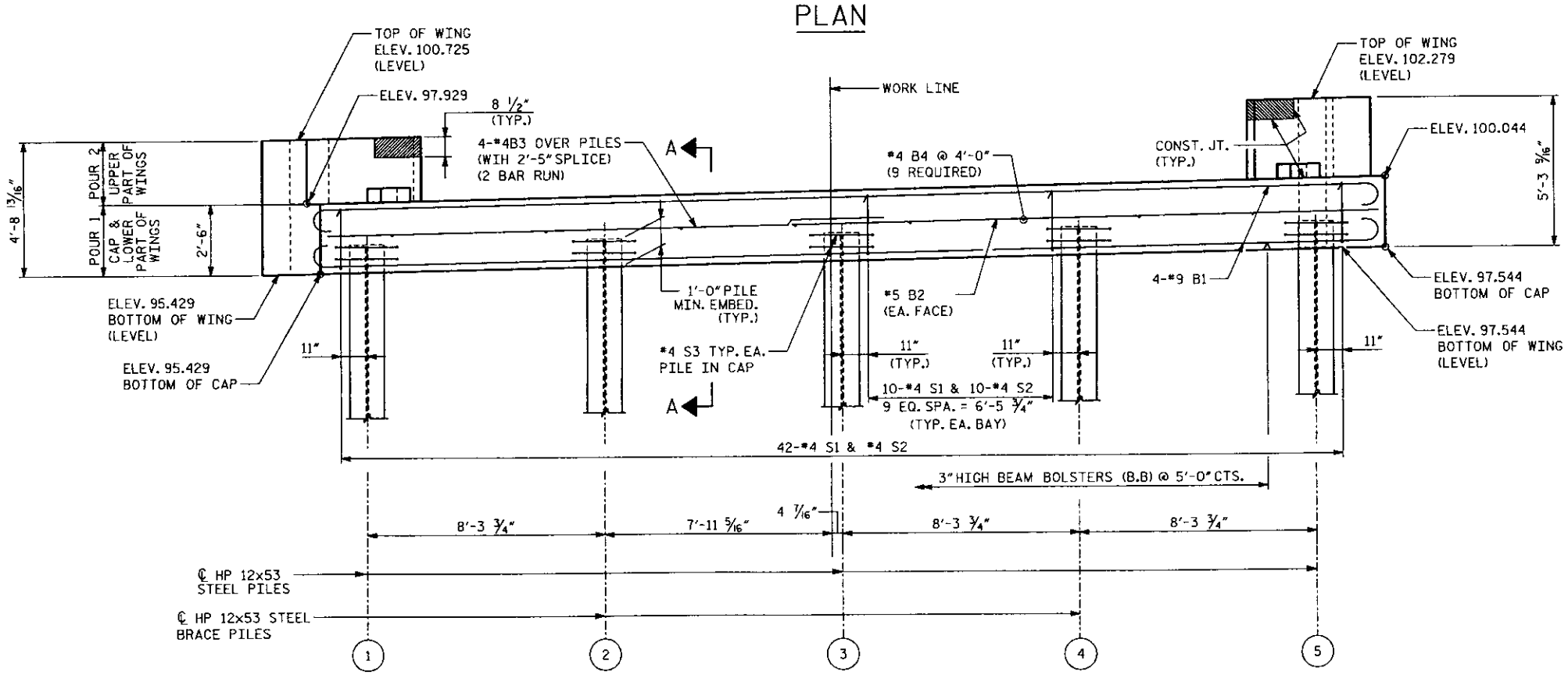

ELEVATION

REINFORCING IN WINGWALLS NOT SHOWN FOR CLARITY.
SEE "SUBSTRUCTURE END BENT DETAILS" SHEET.

(X) DENOTES PILE NUMBER
SEE PILE CUT-OFF ELEVATIONS TABLE THIS SHEET.

PROJECT NO. 33837.1.1

TRANSYLVANIA COUNTY

STATION: 10+11.04 -L-

STATE OF NORTH CAROLINA
DEPARTMENT OF TRANSPORTATION
RALEIGH

SUBSTRUCTURE END BENT 2

26'-10" CLEAR ROADWAY-105° SKEW

NORTH CAROLINA PROFESSIONAL SEAL 29589 ENGINEER DOMENIC A. COLETTI
9-24-09

REVISIONS						SHEET NO. 31
NO.	BY:	DATE:	NO.	BY:	DATE:	TOTAL SHEETS 42
1			3			
2			4			

HDR Engineering, Inc. of the Carolinas
3731 National Drive, Suite 207 Raleigh, N.C. 27612
N.C.B.E.L.S. License Number: F-0116

DRAWN BY : M. SELLS DATE : 03 / 09
CHECKED BY : D. COLETTI DATE : 03 / 09

PLOT DRIVER: HP4500_mono_eng_50.PLT
USER: dwahnwr DATE: 9/22/2009
FILE: North Carolina Dept of Transportation\NCDOT_BMU_Replacements\13.00_NCDOT_File_Structure\B-4691 Transylvania Bridge No.59\Structures\CAD\B4691_SD_E2_01.dgn
PENTABLE: B-4691PEN.tbl
TIME: 6:20:07 PM

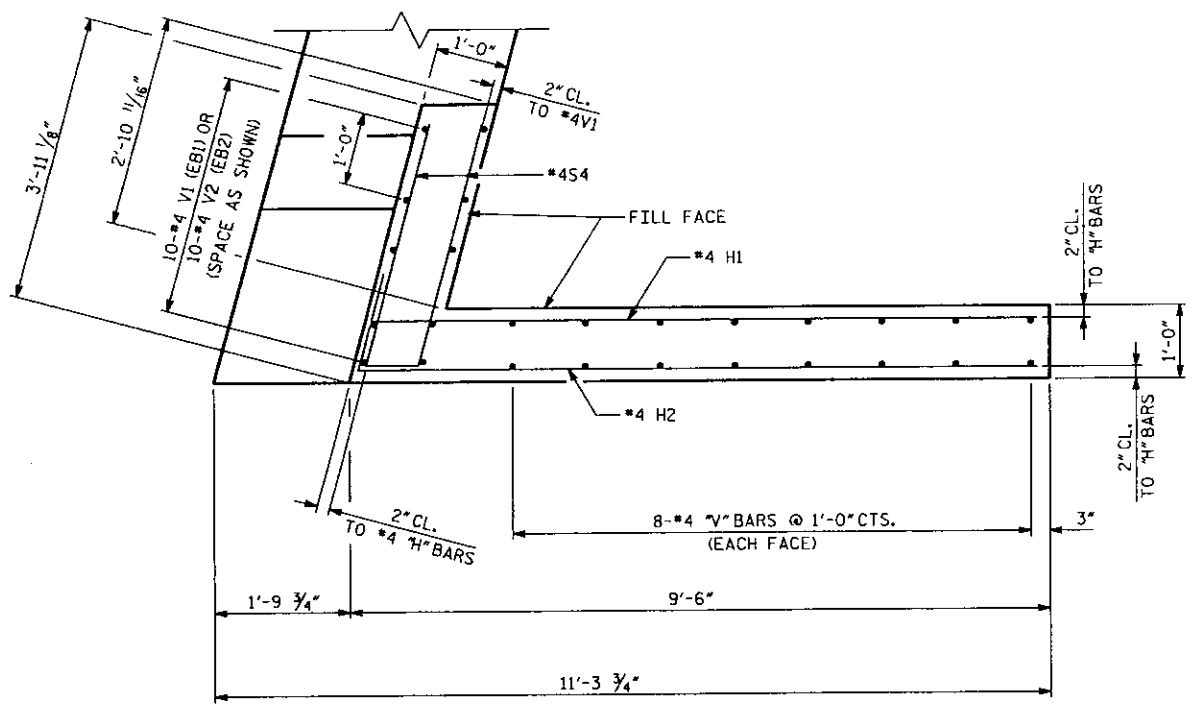

W1 PLAN OF WING

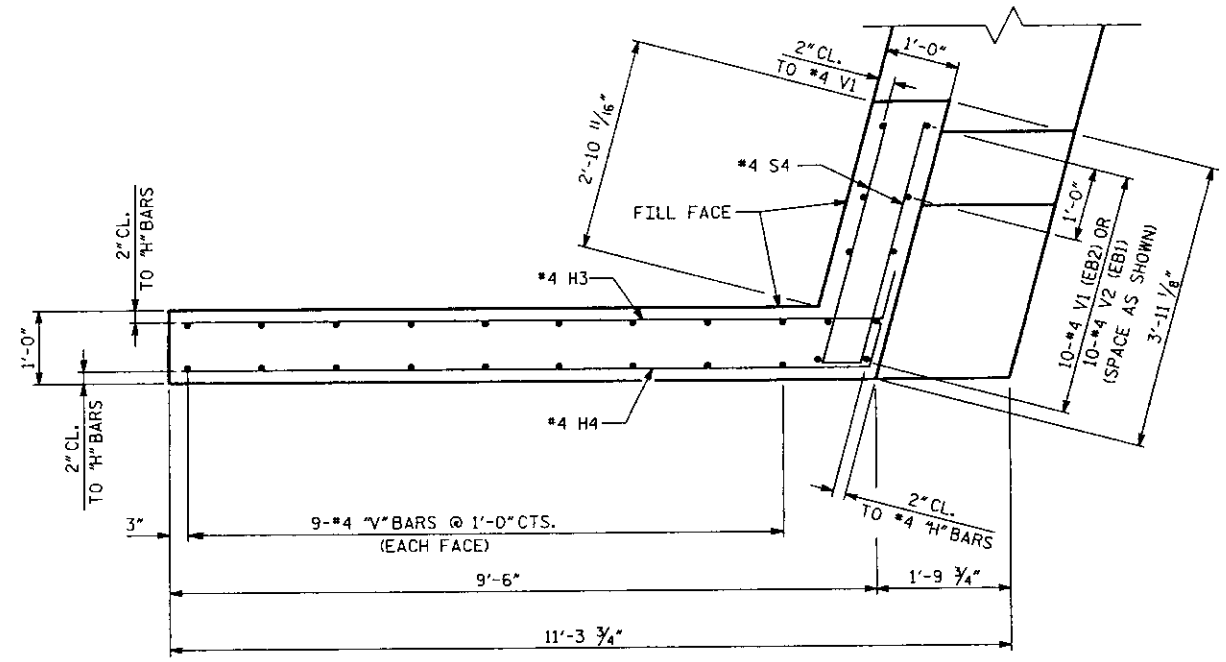

W2 PLAN OF WING

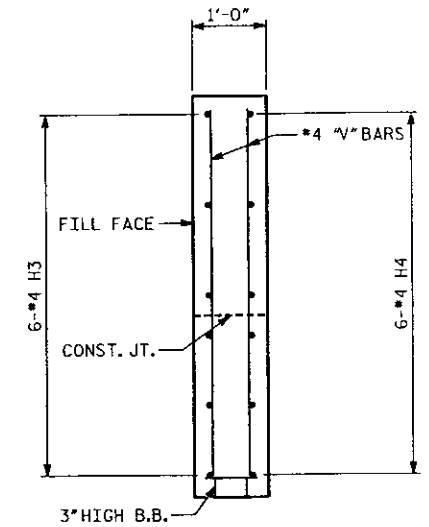

SECTION Y-Y

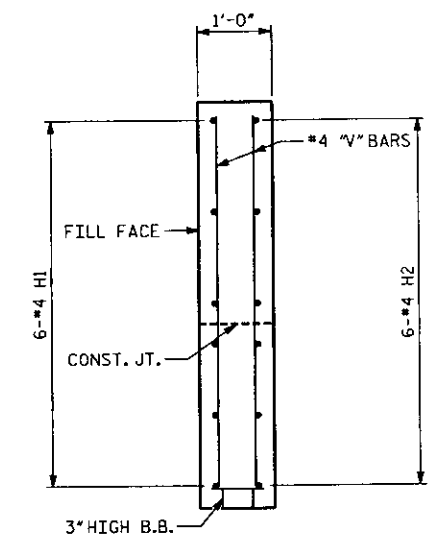

SECTION X-X

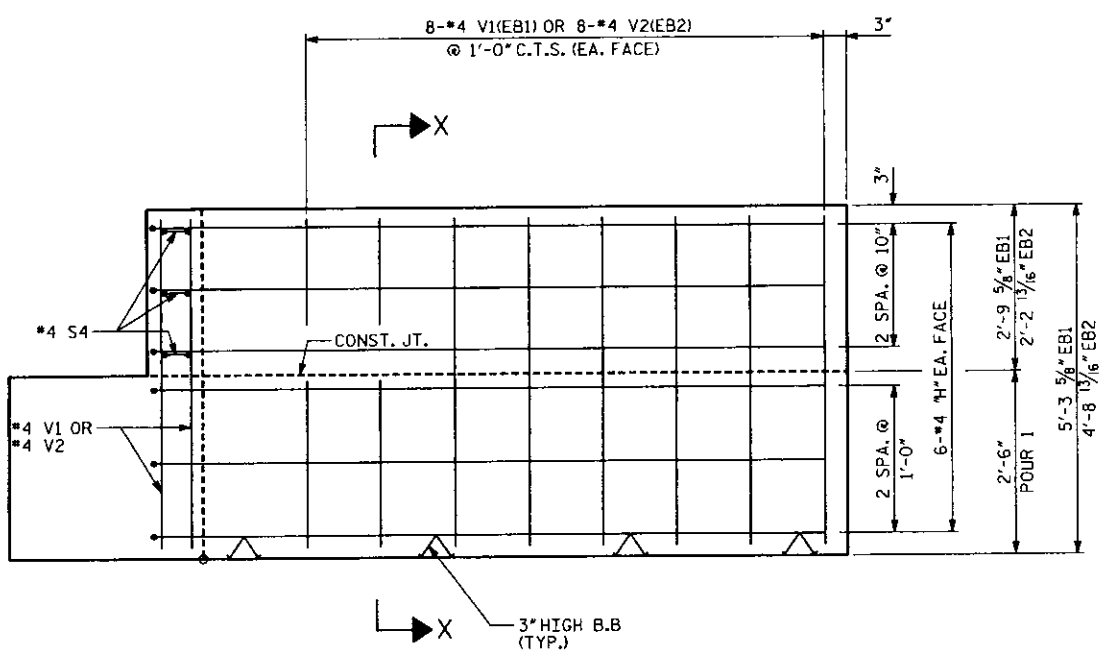

W1 ELEVATION OF WING

FOR ELEVATIONS SEE "SUBSTRUCTURE END BENT 1" AND "SUBSTRUCTURE END BENT 2" SHEETS

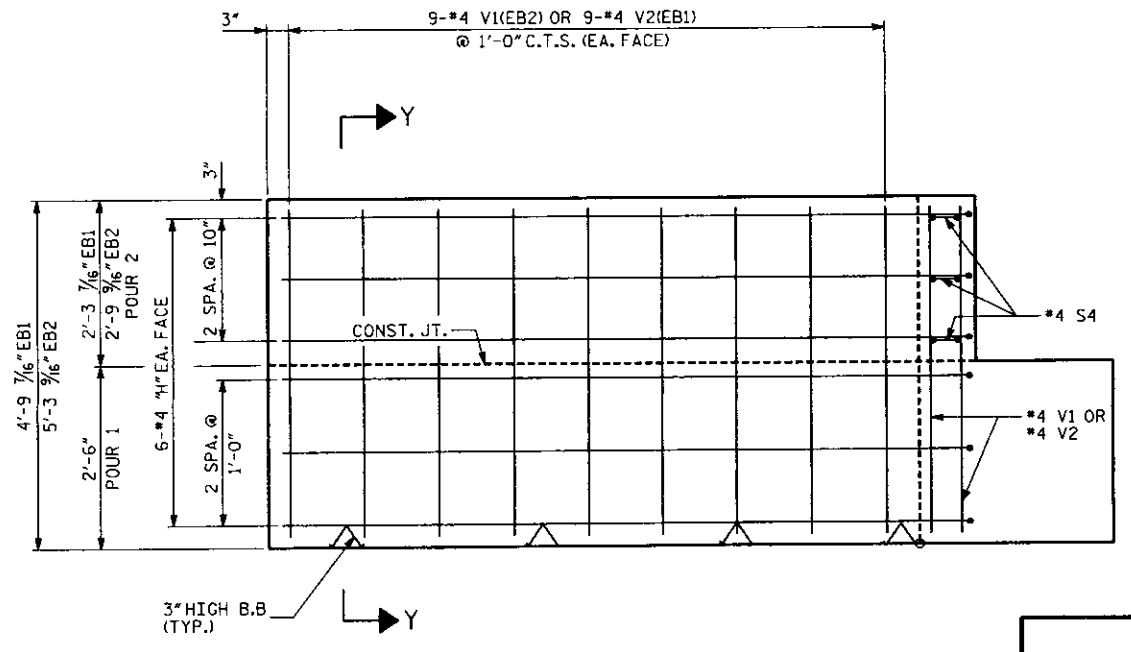

W2 ELEVATION OF WING

FOR ELEVATIONS SEE "SUBSTRUCTURE END BENT 1" AND "SUBSTRUCTURE END BENT 2" SHEETS

PROJECT NO. 33837.1.1

TRANSYLVANIA COUNTY

STATION: 10+11.04 -L-

SHEET 1 OF 2

STATE OF NORTH CAROLINA
DEPARTMENT OF TRANSPORTATION
RALEIGH

SUBSTRUCTURE END BENT DETAILS

26'-10" CLEAR ROADWAY-105° SKEW

NORTH CAROLINA PROFESSIONAL SEAL 29589 ENGINEER DOMENIC A. COLETTI
9-24-09

HDR Engineering, Inc. of the Carolinas
3733 National Drive, Suite 207 Raleigh, N.C. 27612
N.C.B.E.L.S. License Number: F-0116

REVISIONS						SHEET NO. 32
NO.	BY:	DATE:	NO.	BY:	DATE:	TOTAL SHEETS 42
1			3			
2			4			

DRAWN BY : M. SELLS DATE : 03 / 09
CHECKED BY : D. COLETTI DATE : 03 / 09

PLOT DRIVER: HP4500_mono.eng.50.PLT PENTABLE: B-4691PEN.tbl
USER: dwalnwrl DATE: 9/22/2009 TIME: 6:20:16 PM
FILE: North Carolina_Dept_of_Transportation\NCDOT_BMU_Replacements\13.00_NCDOT_File_Structure\B-4691 Transylvania Bridge No.59\Structures\CAD\B4691_SD_E1_02.dgn

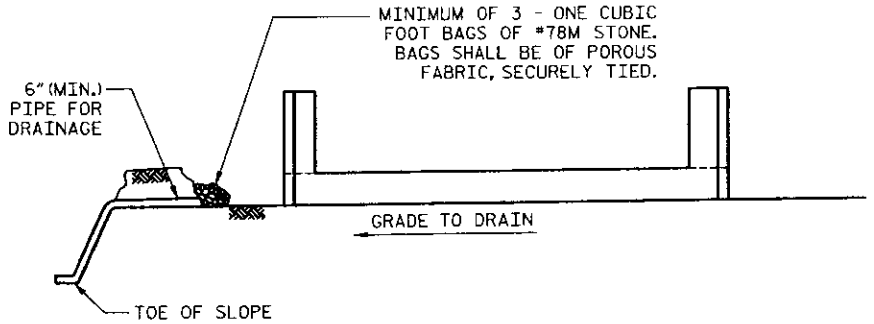

BAGGED STONE AND PIPE SHALL PLACED IMMEDIATELY AFTER COMPLETION OF END BENT EXCAVATION. PIPE MAY BE EITHER CONCRETE, CORRUGATED STEEL, CORRUGATED ALUMINUM ALLOY OR CORRUGATED PLASTIC. PERFORATED PIPE WILL NOT BE ALLOWED.

BAGGED STONE SHALL REMAIN IN PLACE UNTIL THE ENGINEER DIRECTS THAT IT BE REMOVED. THE CONTRACTOR SHALL REMOVE AND DISPOSE OF SILT ACCUMULATIONS AT BAGGED STONE WHEN SO DIRECTED BY THE ENGINEER. BAGS SHALL BE REMOVED AND REPLACED WHENEVER THE ENGINEER DETERMINES THAT THEY HAVE DETERIORATED AND LOST THEIR EFFECTIVENESS.

NO SEPERATE PAYMENT WILL BE MADE FOR THIS WORK AND THE ENTIRE COST OF THIS WORK SHALL BE INCLUDED IN THE UNIT CONTRACT PRICE FOR THE SEVERAL PAY ITEMS.

TEMPORARY DRAINAGE AT END BENT

BAR TYPES

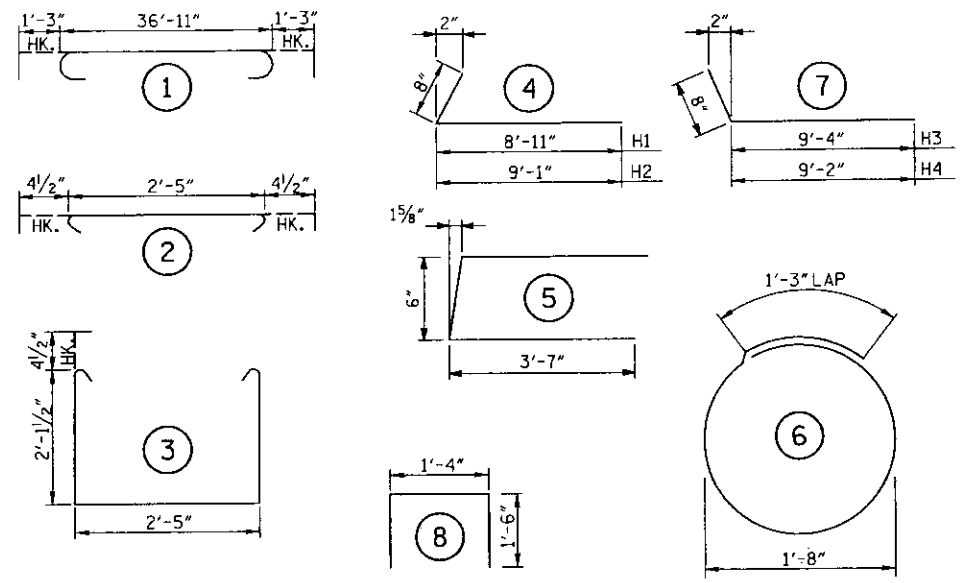

ALL BAR DIMENSIONS ARE OUT TO OUT

BILL OF MATERIAL

END BENT 1

BAR	NO.	SIZE	TYPE	LENGTH	WEIGHT
B1	8	#9	1	39' - 5"	1072
B2	2	#5	STR	36' - 11"	77
B3	8	#4	STR	19' - 8"	105
B4	9	#4	STR	2' - 5"	15
D1	20	#6	STR	1'-6"	45
H1	6	#4	4	9' - 7"	38
H2	6	#4	4	9' - 9"	39
H3	6	#4	7	10' - 0"	40
H4	6	#4	7	9' - 10"	39
S1	42	#4	3	7' - 5"	209
S2	42	#4	2	3' - 2"	89
S3	10	#4	6	6' - 6"	43
S4	6	#4	5	7' - 8"	31
U1	4	#4	8	4'-4"	12
V1	26	#4	STR	4' - 11"	85
V2	28	#4	STR	4' - 4"	81

REINFORCING STEEL	LBS.	2020
CLASS 'A' CONCRETE		
POUR 1	CU. YDS.	11.1
POUR 2	CU. YDS.	2.4
TOTAL	CU. YDS.	13.5
HP 12 X 53 STEEL PILES		
NO. 5	LIN. FT.	50
PILE EXCAVATION (IN SOIL)	LIN. FT.	25
PILE EXCAVATION (NOT IN SOIL)	LIN. FT.	25

END BENT 2

BAR	NO.	SIZE	TYPE	LENGTH	WEIGHT
B1	8	#9	1	39' - 5"	1072
B2	2	#5	STR	36' - 11"	77
B3	8	#4	STR	19' - 8"	105
B4	9	#4	STR	2' - 5"	15
D1	20	#6	STR	1'-6"	45
H1	6	#4	4	9' - 7"	38
H2	6	#4	4	9' - 9"	39
H3	6	#4	7	10' - 0"	40
H4	6	#4	7	9' - 10"	39
S1	42	#4	3	7' - 5"	209
S2	42	#4	2	3' - 2"	89
S3	10	#4	6	6' - 6"	43
S4	6	#4	5	7' - 8"	31
U1	4	#4	8	4'-4"	12
V1	26	#4	STR	4' - 11"	85
V2	28	#4	STR	4' - 4"	81

REINFORCING STEEL	LBS.	2020
CLASS 'A' CONCRETE		
POUR 1	CU. YDS.	11.1
POUR 2	CU. YDS.	2.4
TOTAL	CU. YDS.	13.5
HP 12 X 53 STEEL PILES		
NO. 5	LIN. FT.	75
PILE EXCAVATION (IN SOIL)	LIN. FT.	25
PILE EXCAVATION (NOT IN SOIL)	LIN. FT.	25

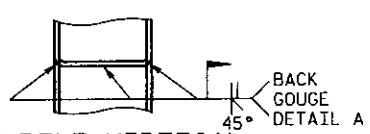

✱ PILE VERTICAL

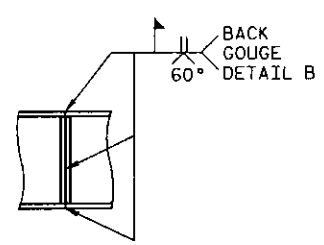

✱ PILE HORIZONTAL OR VERTICAL

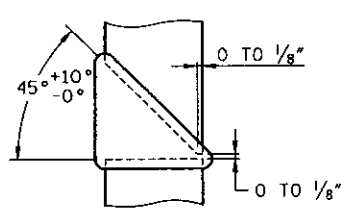

DETAIL A

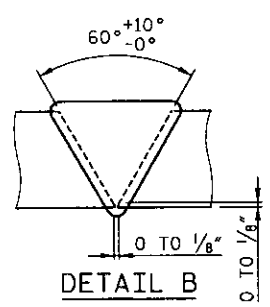

DETAIL B

PILE SPLICE DETAILS

✱ POSITION OF PILE DURING WELDING

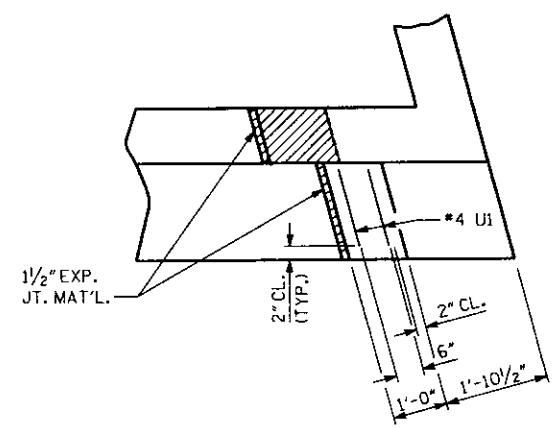

PLAN

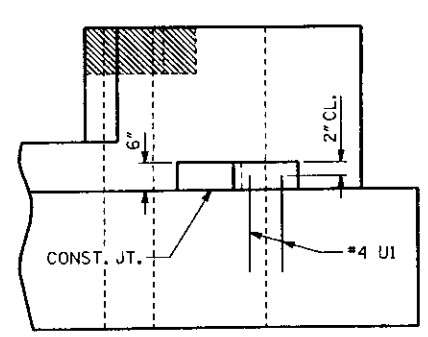

ELEVATION

LATERAL GUIDE DETAILS

(RIGHT SIDE END BENT 2 SHOWN, OTHERS SIMILAR)

(NOTE: CAST LATERAL GUIDE AFTER PLACING CORED SLAB UNITS)

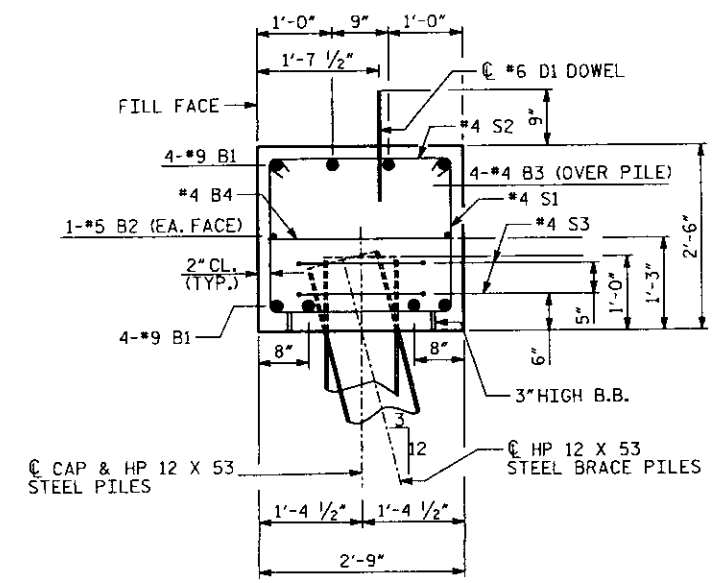

SECTION A-A

PROJECT NO. 33837.1.1

TRANSYLVANIA COUNTY

STATION: 10+11.04 -L-

SHEET 2 OF 2

STATE OF NORTH CAROLINA
DEPARTMENT OF TRANSPORTATION
RALEIGH

SUBSTRUCTURE END BENT DETAILS

26'-10" CLEAR ROADWAY-105° SKEW

NORTH CAROLINA PROFESSIONAL SEAL 29509 ENGINEER DOMENIC A. COLETTI
4-24-09

HDR Engineering, Inc. of the Carolinas
3733 National Drive, Suite 207 Raleigh, N.C. 27612
N.C.B.E.L.S. License Number: F-0116

REVISIONS									SHEET NO. 33
NO.	BY:	DATE:	NO.	BY:	DATE:				TOTAL SHEETS 42
1			3						
2			4						

DRAWN BY : M. SELLS DATE : 03 / 09
CHECKED BY : D. COLETTI DATE : 03 / 09

PLOT DRIVER: HP4500_mono_eng_50.PLT PENTABLE: B-4691PEN.tbl
USER: dwalner1 DATE: 9/22/2009 TIME: 6:20:25 PM
FILE: North Carolina Dept. of Transportation\NCDOT_BMU_Replacements\13.00_NCDOT_File_Structure\B-4691 Transylvania Bridge No.59\Structures\CAD\B4691_SD_E1_03.dgn

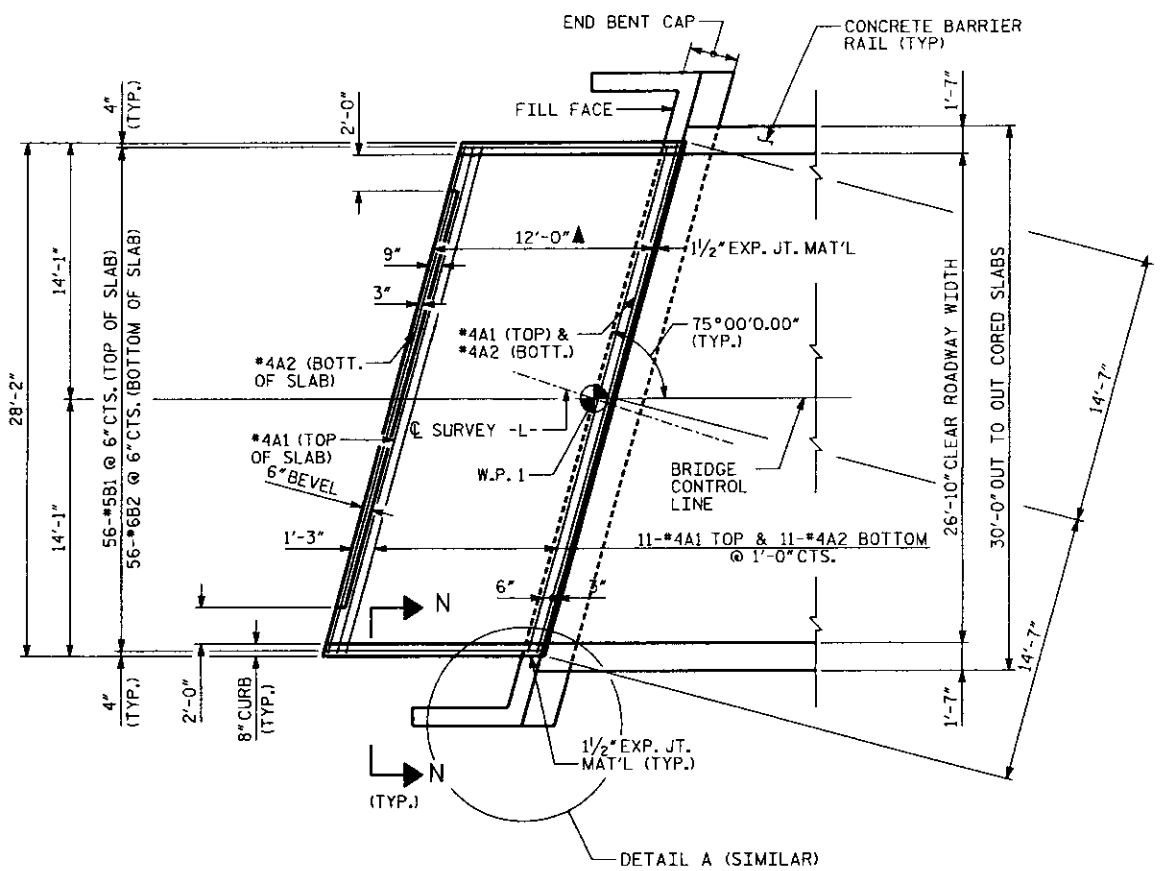

PLAN OF APPROACH SLAB AT END BENT 1

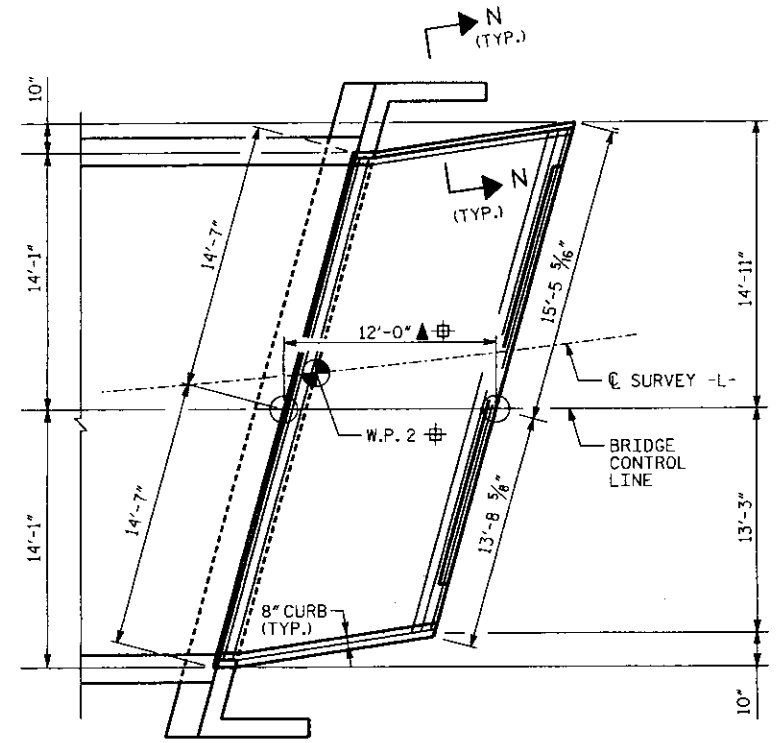

PLAN OF APPROACH SLAB AT END BENT 2

(FOR DIMENSIONS AND REINFORCING NOT SHOWN, SEE PLAN OF APPROACH SLAB AT END BENT 1 SIMILAR)

▲ = MEASURED ALONG THE BRIDGE CONTROL LINE.
⊕ = SEE "LONG CHORD LAYOUT"

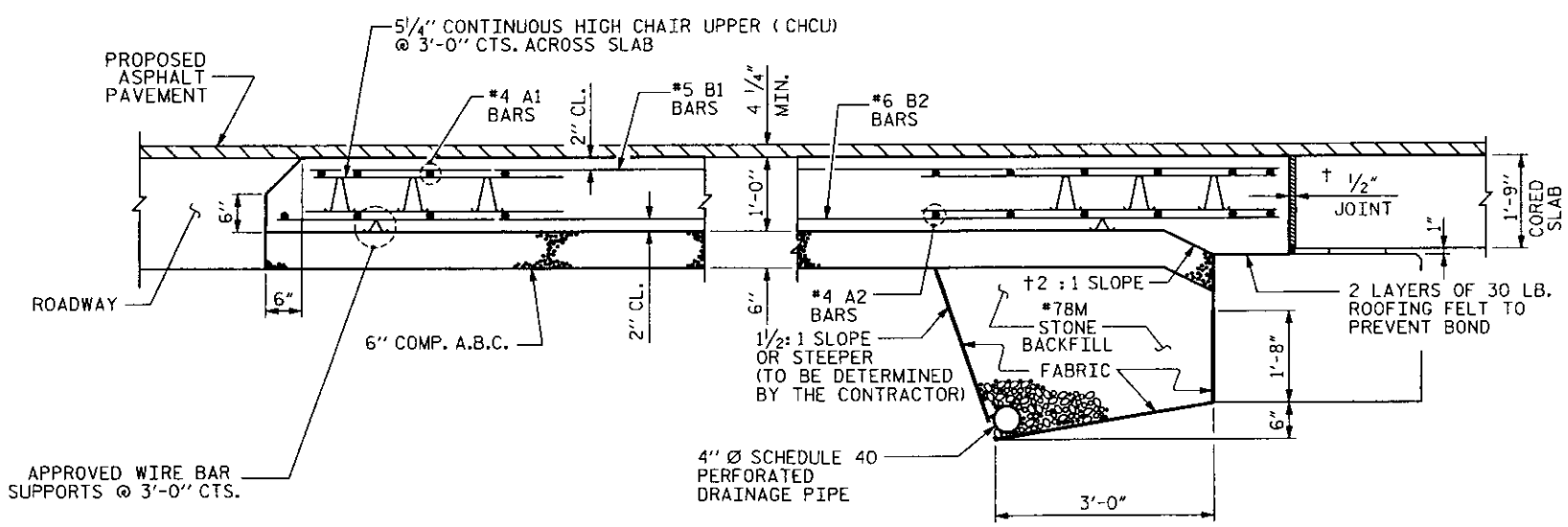

† NORMAL TO END BENT

SECTION THRU SLAB

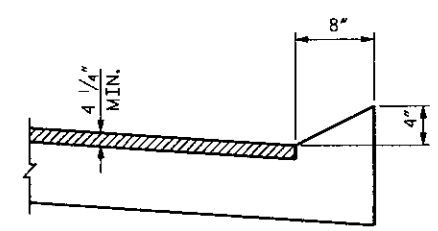

SECTION N-N

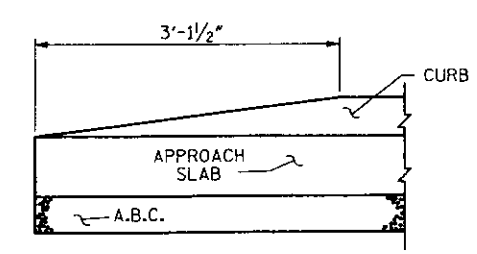

END OF CURB WITHOUT SHOULDER BERM GUTTER

CURB DETAILS

BILL OF MATERIAL

APPROACH SLAB AT EB #1

BAR	NO.	SIZE	TYPE	LENGTH	WEIGHT
* A1	13	#4	STR	29'-0"	250
A2	13	#4	STR	29'-0"	250
* B1	56	#5	STR	11'-3"	652
B2	56	#6	STR	11'-8"	981
REINFORCING STEEL				LBS.	1231
* EPOXY COATED REINFORCING STEEL				LBS.	902
CLASS AA CONCRETE				C. Y.	14.2

APPROACH SLAB AT EB #2

BAR	NO.	SIZE	TYPE	LENGTH	WEIGHT
* A1	13	#4	STR	29'-0"	250
A2	13	#4	STR	29'-0"	250
* B1	56	#5	STR	11'-3"	652
B2	56	#6	STR	11'-8"	981
REINFORCING STEEL				LBS.	1231
* EPOXY COATED REINFORCING STEEL				LBS.	902
CLASS AA CONCRETE				C. Y.	14.2

NOTES

FOR REINFORCED BRIDGE APPROACH FILL INCLUDING FABRIC, IMPERMEABLE GEOMEMBRANE, 4" Ø DRAINAGE PIPE, #78M STONE, AND SELECT MATERIAL, SEE ROADWAY SHEETS. PAYMENT SHALL BE INCLUDED IN THE LUMP SUM CONTRACT BID PRICE FOR BRIDGE APPROACH SLAB.

AREA BETWEEN THE WINGWALL AND APPROACH SLAB SHALL BE GRADED TO DRAIN THE WATER AWAY FROM THE FILL FACE OF THE BRIDGE AND SHALL BE PAVED.

THE 6" COMP. A.B.C. SHALL BE FLUSH WITH THE END OF THE APPROACH SLAB AND 1'-0" OUTSIDE OF EACH EDGE OF SLAB.

THE CONTRACTOR MAY USE 4" TYPE B-25.0B ASPHALT CONCRETE BASE COURSE IN LIEU OF 6" COMP. A.B.C. IF THIS OPTION IS USED, THE BASE COURSE SHALL EXTEND 1'-0" BEYOND THE END OF THE APPROACH SLAB AND THE WIDTH SHALL BE THE SAME AS THAT OF THE APPROACH SLAB.

THE CONTRACTOR MAY USE 5" CLASS "A" CONCRETE BASE IN LIEU OF 6" COMP. A.B.C. IF THIS OPTION IS USED, THE CONCRETE BASE SHALL BE FLUSH WITH THE END OF THE APPROACH SLAB AND THE WIDTH SHALL BE THE SAME AS THAT OF THE APPROACH SLAB. THE CONCRETE SHALL BE FINISHED TO A SMOOTH SURFACE AND A LAYER OF 30 LB ROOFING FELT SHALL BE PLACED BETWEEN THE CONCRETE BASE AND THE APPROACH SLAB TO PREVENT BOND. THE APPROACH SLAB SHALL NOT BE CAST UNTIL THE CONCRETE BASE HAS REACHED AN AGE OF THREE CURING DAYS.

FOR JOINT DETAILS, SEE "PRESTRESSED CONCRETE CORED SLAB UNIT" SHEET 2 OF 4.

THE JOINT AT THE END BENT SHALL BE SEALED AS SOON AS PRACTICAL AFTER THE CONSTRUCTION OF THE APPROACH SLABS.

APPROACH SLAB GROOVING IS NOT REQUIRED.

PROJECT NO. 33837.1.1
TRANSYLVANIA COUNTY
STATION: 10+11.04 -L-

SHEET 1 OF 2

STATE OF NORTH CAROLINA
DEPARTMENT OF TRANSPORTATION
RALEIGH

BRIDGE APPROACH SLAB FOR PRECAST CONCRETE CORED SLAB

26'-10" CLEAR ROADWAY-105° SKEW

NORTH CAROLINA PROFESSIONAL SEAL 29589 ENGINEER DOMENIC A. COLETTI
9-24-09

HDR Engineering, Inc. of the Carolinas
3733 National Drive, Suite 297 Raleigh, N.C. 27612
N.C.B.E.L.S. License Number: F-0116

REVISIONS							SHEET NO. 34
NO.	BY:	DATE:	NO.	BY:	DATE:		
1			3				TOTAL SHEETS 42
2			4				

DRAWN BY : M. SELLS DATE : 03 / 09
CHECKED BY : D. COLETTI DATE : 03 / 09

PLOT DRIVER: HP4500_mono_eng_50.PLT
USER: dwainwr DATE: 9/22/2009
FILE: North Carolina_Dept_of_Transportation\NCDOT_BMU_Replacements\13.00_NCDOT_File_Structure\B-4691 Transylvania Bridge No.59\Structures\CAD\B4691_SD_A5_01.dgn
PENTABLE: B-4691PEN.tbl
TIME: 6:20:35 PM

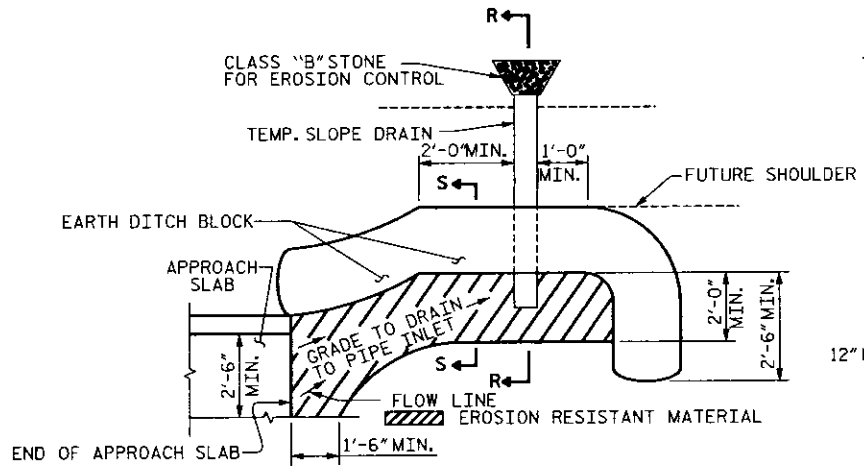

NOTE: IMMEDIATELY AFTER THE CONSTRUCTION OF THE APPROACH SLAB, THE CONTRACTOR SHALL PROVIDE TEMPORARY BERM AND SLOPE DRAIN. CONTRACTOR SHALL GRADE TO PIPE INLET AND PROVIDE EROSION RESISTANT MATERIAL AS SHOWN. THE EROSION RESISTANT MATERIAL SHALL BE EITHER 1) ASPHALT PLANT MIX, TYPE 1 OR TYPE 2, MIN. 2" DEPTH, 2) EROSION CONTROL MAT, OR 3) CONCRETE, AS DIRECTED BY THE ENGINEER. THE SLOPE DRAIN SHALL CONSIST OF A NON-PERFORATED TEMPORARY DRAINAGE PIPE, 12 INCHES IN DIAMETER.

PLAN VIEW

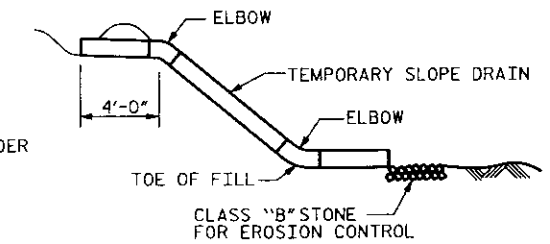

SECTION R-R

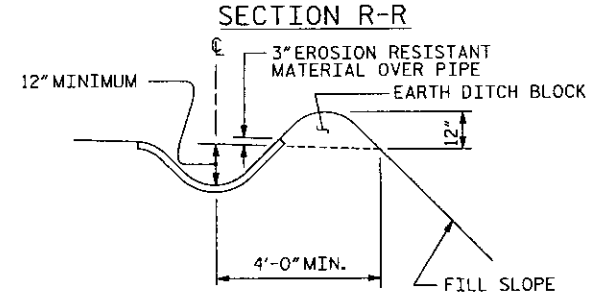

SECTION S-S

TEMPORARY BERM AND SLOPE DRAIN DETAILS

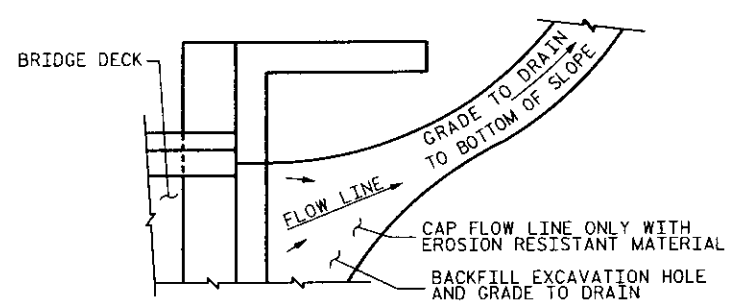

NOTE: IF THE APPROACH SLAB IS NOT CONSTRUCTED IMMEDIATELY AFTER THE BACKFILLING OF THE END BENT EXCAVATION, GRADE TO DRAIN TO THE BOTTOM OF THE SLOPE AND PROVIDE EROSION RESISTANT MATERIAL, SUCH AS FIBERGLASS ROVING OR AS DIRECTED BY THE ENGINEER TO PREVENT SOIL EROSION AND TO PROTECT THE AREA ADJACENT TO THE STRUCTURE. THE CONTRACTOR WILL BE REQUIRED TO REMOVE THESE MATERIALS PRIOR TO CONSTRUCTION OF THE APPROACH SLAB.

TEMPORARY DRAINAGE DETAIL

PROJECT NO. 33837.1.1

TRANSYLVANIA COUNTY

STATION: 10+11.04 -L-

SHEET 2 OF 2

STATE OF NORTH CAROLINA
DEPARTMENT OF TRANSPORTATION
RALEIGH

BRIDGE APPROACH SLAB DETAILS

26'-10" CLEAR ROADWAY-105° SKEW

NORTH CAROLINA PROFESSIONAL SEAL 29589 ENGINEER DOMENIC A. COLETTI
Domenic A. Coletti
9-24-09

HDR Engineering, Inc. of the Carolinas
5723 National Drive, Suite 202 Raleigh, N.C. 27612
N.C.B.E.L.S. License Number: F-0116

REVISIONS						SHEET NO. 35
NO.	BY:	DATE:	NO.	BY:	DATE:	TOTAL SHEETS 42
1			3			
2			4			

DRAWN BY : M. SELLS DATE : 03 / 09
CHECKED BY : D. COLETTI DATE : 03 / 09

PLOT DRIVER: HP4500_mono_eng.SO.PLT
USER: dwalnwrl DATE: 9/22/2009
FILE: North Carolina_Dept_of_Transportation\NCDOT_BMU_Replacements\13.00_NCDOT_File_Structure\B-4691 Transylvania Bridge No.59\Structures\CAD\B4691_S0_A5_02.dgn
PENTABLE: B-4691PEN.tbl
TIME: 6:20:44 PM

STANDARD NOTES

DESIGN DATA:

SPECIFICATIONS	A.A.S.H.T.O. (CURRENT)
LIVE LOAD	SEE PLANS
IMPACT ALLOWANCE	SEE A.A.S.H.T.O.
STRESS IN EXTREME FIBER OF	
STRUCTURAL STEEL - AASHTO M270 GRADE 36	20,000 LBS. PER SQ. IN.
- AASHTO M270 GRADE 50W	27,000 LBS. PER SQ. IN.
- AASHTO M270 GRADE 50	27,000 LBS. PER SQ. IN.
REINFORCING STEEL IN TENSION	
GRADE 60	24,000 LBS. PER SQ. IN.
CONCRETE IN COMPRESSION	1,200 LBS. PER SQ. IN.
CONCRETE IN SHEAR	SEE A.A.S.H.T.O.
STRUCTURAL TIMBER - TREATED OR	
UNTREATED - EXTREME FIBER STRESS	1,800 LBS. PER SQ. IN.
COMPRESSION PERPENDICULAR TO GRAIN OF TIMBER	375 LBS. PER SQ. IN.
EQUIVALENT FLUID PRESSURE OF EARTH	30 LBS. PER CU. FT. (MINIMUM)

MATERIAL AND WORKMANSHIP:

EXCEPT AS MAY OTHERWISE BE SPECIFIED ON PLANS OR IN THE SPECIAL PROVISIONS, ALL MATERIAL AND WORKMANSHIP SHALL BE IN ACCORDANCE WITH THE 2002 STANDARD SPECIFICATIONS "FOR ROADS AND STRUCTURES" OF THE N. C. DEPARTMENT OF TRANSPORTATION.

STEEL SHEET PILING FOR PERMANENT OR TEMPORARY APPLICATIONS SHALL BE HOT ROLLED.

CONCRETE:

UNLESS OTHERWISE REQUIRED ON PLANS, CLASS A CONCRETE SHALL BE USED FOR ALL PORTIONS OF ALL STRUCTURES WITH THE EXCEPTION THAT: CLASS AA CONCRETE SHALL BE USED IN BRIDGE SUPERSTRUCTURES, ABUTMENT BACKWALLS, AND APPROACH SLABS; CLASS B CONCRETE SHALL BE USED FOR SLOPE PROTECTION AND RIP RAP; AND CLASS S SHALL BE USED FOR UNDERWATER FOOTING SEALS.

CONCRETE CHAMFERS:

UNLESS OTHERWISE NOTED ON THE PLANS, ALL EXPOSED CORNERS ON STRUCTURES SHALL BE CHAMFERED 3/4" WITH THE FOLLOWING EXCEPTIONS: TOP CORNERS OF CURBS MAY BE ROUNDED TO 1-1/2" RADIUS WHICH IS BUILT INTO CURB FORMS; CORNERS OF TRANSVERSE FLOOR EXPANSION JOINTS SHALL BE ROUNDED WITH A 1/4" FINISHING TOOL UNLESS OTHERWISE REQUIRED ON PLANS; AND CORNERS OF EXPANSION JOINTS IN THE ROADWAY FACES AND TOPS OF CURBS AND SIDEWALKS SHALL BE ROUNDED TO A 1/4" RADIUS WITH A FINISHING STONE OR TOOL UNLESS OTHERWISE REQUIRED ON PLANS.

DOWELS:

DOWELS WHEN INDICATED ON PLANS AS FOR CULVERT EXTENSIONS, SHALL BE EMBEDDED AT LEAST 12" INTO THE OLD CONCRETE AND GROUTED INTO PLACE WITH 1:2 CEMENT MORTAR.

ALLOWANCE FOR DEAD LOAD DEFLECTION, SETTLEMENT, ETC. IN CASTING SUPERSTRUCTURES:

BRIDGES SHALL BE BUILT ON THE GRADE OR VERTICAL CURVE SHOWN ON PLANS. SLABS, CURBS AND PARAPETS SHALL CONFORM TO THE GRADE OR CURVE.

ALL DIMENSIONS WHICH ARE GIVEN IN SECTION AND ARE AFFECTED BY DEAD LOAD DEFLECTIONS ARE DIMENSIONS AT CENTER LINE OF BEARING UNLESS OTHERWISE NOTED ON PLANS. IN SETTING FORMS FOR STEEL BEAM BRIDGES AND PRESTRESSED CONCRETE GIRDER BRIDGES, ADJUSTMENTS SHALL BE MADE DUE TO THE DEAD LOAD DEFLECTIONS FOR THE ELEVATIONS SHOWN. WHERE BLOCKS ARE SHOWN OVER BEAMS FOR BUILDING UP TO THE SLAB, THE VERTICAL DIMENSIONS OF THE BLOCKS SHALL BE ADJUSTED BETWEEN BEARINGS TO COMPENSATE FOR DEAD LOAD DEFLECTIONS, VERTICAL CURVE ORDINATE, AND ACTUAL BEAM CAMBER. WHERE BOTTOM OF SLAB IS IN LINE WITH BOTTOM OF TOP FLANGES, DEPTH OF SLAB BETWEEN BEARINGS SHALL BE ADJUSTED TO COMPENSATE FOR DEAD LOAD DEFLECTION, VERTICAL CURVE ORDINATE, AND ACTUAL BEAM CAMBER.

IN SETTING FALSEWORK AND FORMS FOR REINFORCED CONCRETE SPANS, AN ALLOWANCE SHALL BE MADE FOR DEAD LOAD DEFLECTIONS, SETTLEMENT OF FALSEWORK, AND PERMANENT CAMBER WHICH SHALL BE PROVIDED FOR IN ADDITION TO THE ELEVATIONS SHOWN. AFTER REMOVAL OF THE FALSEWORK, THE FINISHED STRUCTURES SHALL CONFORM TO THE PROFILE AND ELEVATIONS SHOWN ON THE PLANS AND CONSTRUCTION ELEVATIONS FURNISHED BY THE ENGINEER.

DETAILED DRAWINGS FOR FALSEWORK OR FORMS FOR BRIDGE SUPERSTRUCTURE AND ANY STRUCTURE OR PARTS OF A STRUCTURE AS NOTED ON THE PLANS SHALL BE SUBMITTED TO THE ENGINEER FOR APPROVAL BEFORE CONSTRUCTION OF THE FALSEWORK OR FORMS IS STARTED.

REINFORCING STEEL:

ALL REINFORCING STEEL SHALL BE DEFORMED WITH THE EXCEPTION OF #2 BARS WHICH MAY BE FABRICATED FROM COLD DRAWN STEEL WIRE. DIMENSIONS RELATIVE TO PLACEMENT OF REINFORCING ARE TO CENTERS OF BARS UNLESS OTHERWISE INDICATED IN THE PLANS. DIMENSIONS ON BAR DETAILS ARE TO CENTERS OF BARS OR ARE OUT TO OUT AS INDICATED ON PLANS.

WIRE BAR SUPPORTS SHALL BE PROVIDED FOR REINFORCING STEEL WHERE INDICATED ON THE PLANS. WHEN BAR SUPPORT PIECES ARE PLACED IN CONTINUOUS LINES, THEY SHALL BE SO PLACED THAT THE ENDS OF THE SUPPORTING WIRES SHALL BE LAPPED TO LOCK LEGS ON ADJOINING PIECES.

STRUCTURAL STEEL:

AT THE CONTRACTOR'S OPTION, HE MAY SUBSTITUTE 7/8" Ø SHEAR STUDS FOR THE 3/4" Ø STUDS SPECIFIED ON THE PLANS. THIS SUBSTITUTION SHALL BE MADE AT THE RATE OF 3 - 7/8" Ø STUDS FOR 4 - 3/4" Ø STUDS, AND STUD SPACING CHANGES SHALL BE MADE AS NECESSARY TO PROVIDE THE SAME EQUIVALENT NUMBER OF 7/8" Ø STUDS ALONG THE BEAM AS SHOWN FOR 3/4" Ø STUDS BASED ON THE RATIO OF 3 - 7/8" Ø STUDS FOR 4 - 3/4" Ø STUDS. STUDS OF THE LENGTH SPECIFIED ON THE PLANS MUST BE PROVIDED. THE MAXIMUM SPACING SHALL BE 2'-0".

EXCEPT AT THE INTERIOR SUPPORTS OF CONTINUOUS BEAMS WHERE THE COVER PLATE IS IN CONTACT WITH BEARING PLATE, THE CONTRACTOR MAY, AT HIS OPTION, SUBSTITUTE FOR THE COVER PLATES DESIGNATED ON THE PLANS COVER PLATES OF THE EQUIVALENT AREA PROVIDED THESE PLATES ARE AT LEAST 5/16" IN THICKNESS AND DO NOT EXCEED A WIDTH EQUAL TO THE FLANGE WIDTH LESS 2" OR A THICKNESS EQUAL TO 2 TIMES THE FLANGE THICKNESS. THE SIZE OF FILLET WELDS SHALL CONFORM TO THE REQUIREMENTS OF THE CURRENT ANSI/AASHTO/AWS "BRIDGE WELDING CODE". ELECTROSLAG WELDING WILL NOT BE PERMITTED.

PLACEMENT OF BEAM OR GIRDER MEMBERS ON TRUCKS FOR HAULING SHALL BE DONE IN COMPLIANCE WITH LIMITS SHOWN ON SKETCHES PROVIDED TO THE MATERIALS AND TEST UNIT APPROVED BY THE STRUCTURE DESIGN UNIT DATED MAY 8, 1991. THESE SKETCHES PRIMARILY LIMIT THE UNSUPPORTED CANTILEVER LENGTH OF MEMBERS. WHEN THE CONTRACTOR WISHES TO PLACE MEMBERS ON TRUCKS NOT IN ACCORDANCE WITH THESE LIMITS, TO SHIP BY RAIL, TO ATTACH SHIPPING RESTRAINTS TO THE MEMBERS OR TO INVERT MEMBERS, HE SHALL SUBMIT A SKETCH FOR APPROVAL PRIOR TO SHIPPING. SEE ALSO ARTICLE 1072-11.

WITH THE SOLE EXCEPTION OF EDGES AT SURFACES WHICH BEAR ON OTHER SURFACES, ALL SHARP EDGES AND ENDS OF SHAPES AND PLATES SHALL BE SLIGHTLY ROUNDED BY SUITABLE MEANS TO A RADIUS OF APPROXIMATELY 1/16 INCH OR EQUIVALENT FLAT SURFACE AT A SUITABLE ANGLE PRIOR TO PAINTING, GALVANIZING, OR METALLIZING.

HANDRAILS AND POSTS:

METAL STANDARDS AND FACES OF THE CONCRETE END POSTS FOR THE METAL RAIL SHALL BE SET NORMAL TO THE GRADE OF THE CURB, UNLESS OTHERWISE SHOWN ON PLANS. THE METAL RAIL AND TOPS OF CONCRETE POSTS USED WITH THE ALUMINUM RAIL SHALL BE BUILT PARALLEL TO THE GRADE OF THE CURB.

METAL HANDRAILS SHALL BE IN ACCORDANCE WITH THE PLANS. RAILS SHALL BE AS MANUFACTURED FOR BRIDGE RAILING. CASTINGS SHALL BE OF A UNIFORM APPEARANCE. FINS AND OTHER DEFORMATIONS RESULTING FROM CASTING OR OTHERWISE SHALL BE REMOVED IN A MANNER SO THAT A UNIFORM COLORING OF THE COMPLETED CASTING SHALL BE OBTAINED. CASTINGS WITH DISCOLORATIONS OR OF NON-UNIFORM COLORING WILL NOT BE ACCEPTED. CERTIFIED MILL REPORTS ARE REQUIRED FOR METAL RAILS AND POSTS.

SPECIAL NOTES:

GENERALLY, IN CASE OF DISCREPANCY, THIS STANDARD SHEET OF NOTES SHALL GOVERN OVER THE SPECIFICATIONS, BUT THE REMAINDER OF THE PLANS SHALL GOVERN OVER NOTES HEREON, AND SPECIAL PROVISIONS SHALL GOVERN OVER ALL. SEE SPECIFICATIONS ARTICLE 105-4.

PROJECT NO. 33837.1.1

TRANSYLVANIA COUNTY

STATION: 10+11.04 -L-

NORTH CAROLINA PROFESSIONAL SEAL 29509 ENGINEER DOMENIC A. COLETTI

9-24-09

STATE OF NORTH CAROLINA
DEPARTMENT OF TRANSPORTATION
RALEIGH

STANDARD NOTES

26'-10" CLEAR ROADWAY-105° SKEW

REVISIONS								SHEET NO. 36
NO.	BY:	DATE:	NO.	BY:	DATE:			
1			3					TOTAL SHEETS 42
2			4					

HDR Engineering, Inc. of the Carolinas
3733 National Drive, Suite 207 Raleigh, N.C. 27612
N.C.B.E.L.S. License Number: F-0116

DRAWN BY : M. SELLS DATE : 03 / 09
CHECKED BY : D. COLETTI DATE : 03 / 09

PLOT DRIVER: HP4500_mono_eng_50.PLT PENTABLE: B-4691PEN.tbl
USER: dwalnwri DATE: 9/22/2009 TIME: 6:20:53 PM
FILE: North Carolina_Dept_of_Transportation\NCDOT_BMU_Replacements\13.00_NCDOT_File_Structure\B-4691 Transylvania Bridge No.59\Structures\CAD\B4691_SD_SN_01.dgn

PROJECT REFERENCE NO.	SHEET NO.
B-4691	37 of 42

EROSION CONTROL PLAN

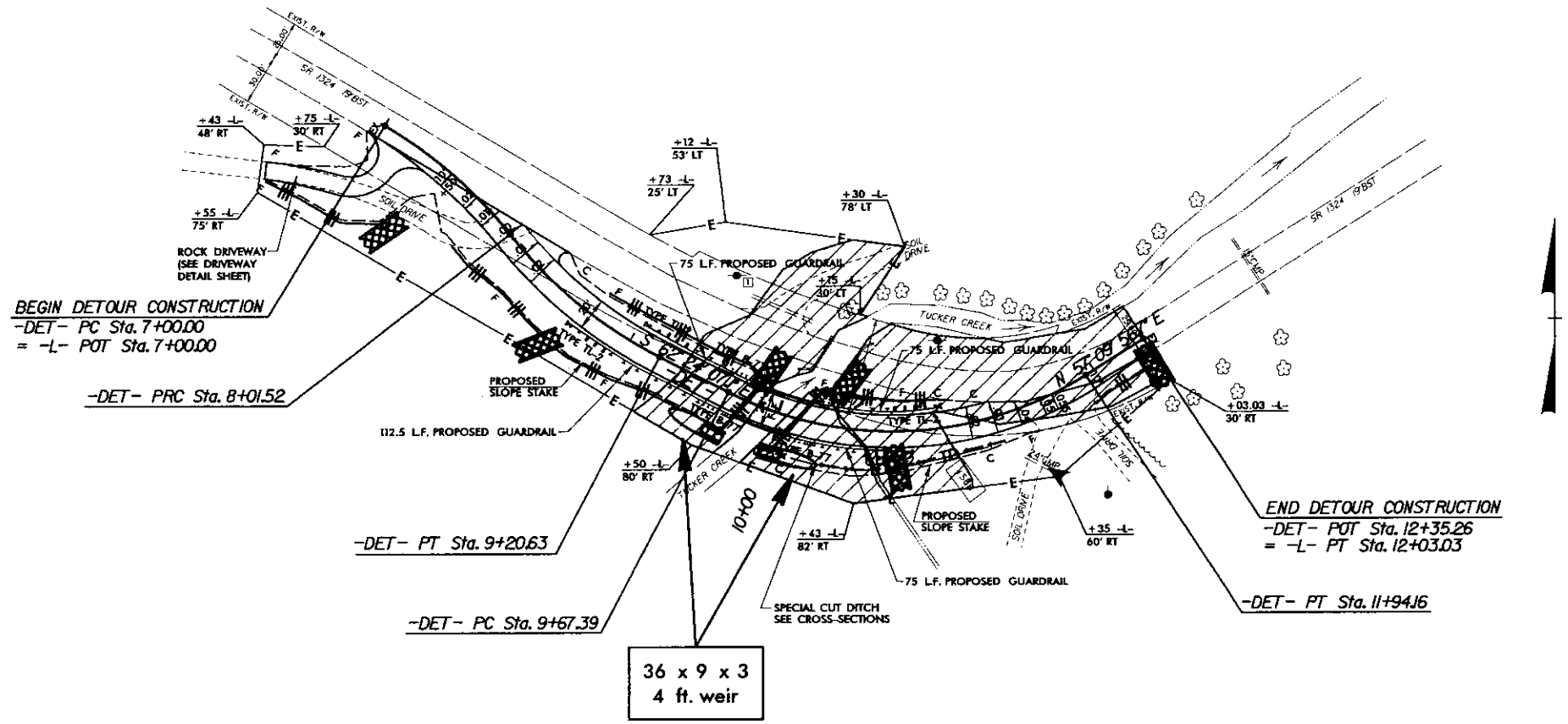

Std. #	Description	Symbol
1605.01	Temporary Silt Fence	
1630.05	Temporary Diversion	TD
1633.01	Temporary Rock Silt Check Type-A	
	Temporary Rock Silt Check Type-B	
1634.02	Temporary Rock Sediment Dam Type-B	

ENVIRONMENTALLY SENSITIVE AREA
PLEASE SEE NOTE

NOTES: ANY DEVIATION FROM OPTIONS GIVEN WILL REQUIRE PRIOR APPROVAL BY ENGINEER.

ADDITIONAL EROSION CONTROL DEVICES MAY NEED TO BE INSTALLED AS DIRECTED BY THE ENGINEER.

ROADSIDE ENVIRONMENTAL UNIT
DEPARTMENT OF TRANSPORTATION
DIVISION OF HIGHWAYS
RALEIGH, N.C.

2006 STANDARD SPECIFICATIONS

DETOUR

8/17/99

9/22/2009
C:\Working\TPA\d0135325\B4691_EC_psh_det.dgn
4:56:43 PM

PROJECT REFERENCE NO.	SHEET NO.
B-4691	38 of 42

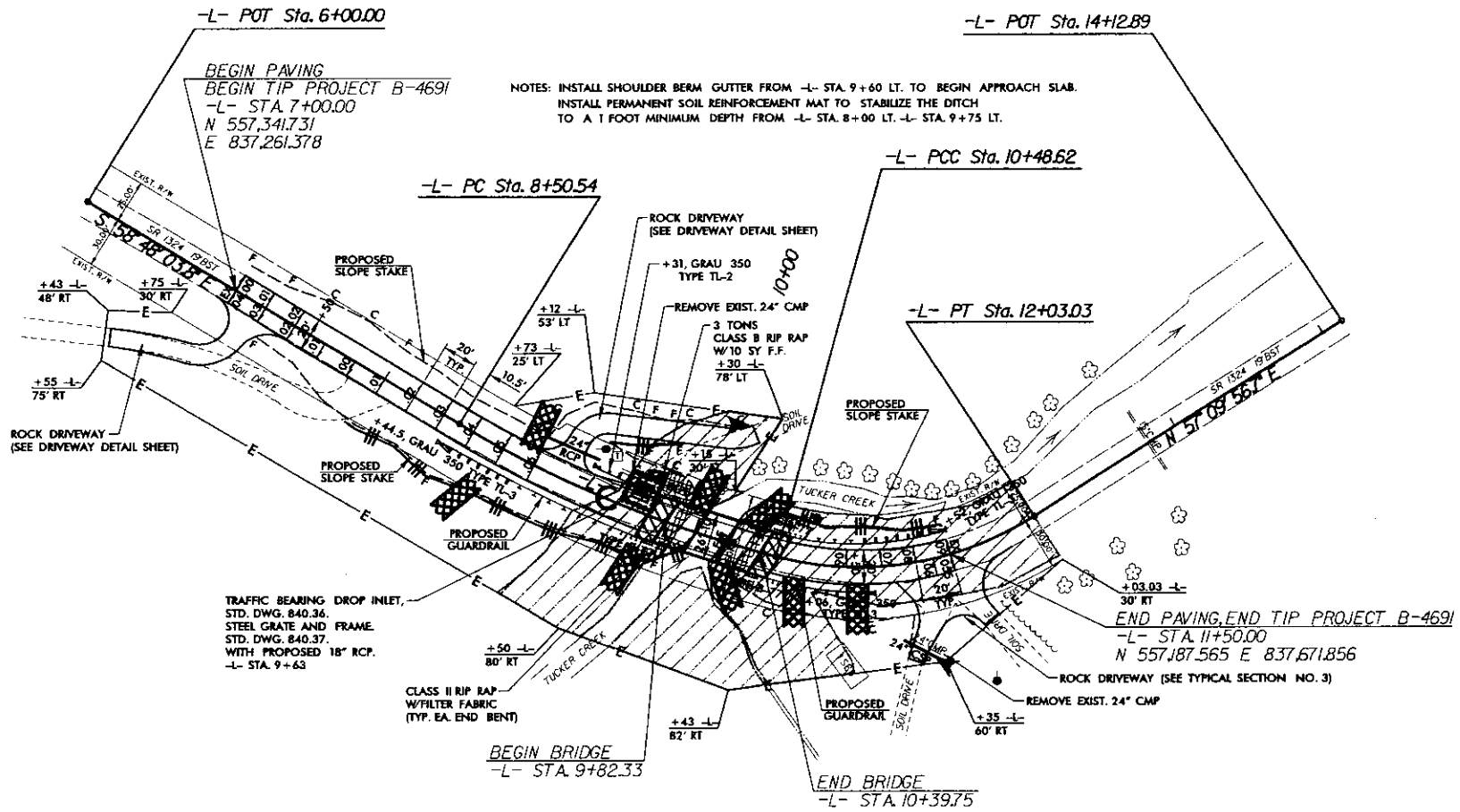

Std. #	Description	Symbol
1605.01	Temporary Silt Fence	
1632.03	Rock Inlet Sediment Trap Type C	
1633.01	Temporary Rock Silt Check Type-A	
	Temporary Rock Silt Check Type-B	

ROADSIDE ENVIRONMENTAL UNIT
DEPARTMENT OF TRANSPORTATION
DIVISION OF HIGHWAYS
RALEIGH, N.C.

2006 STANDARD SPECIFICATIONS

NOTES: ANY DEVIATION FROM OPTIONS GIVEN WILL REQUIRE PRIOR APPROVAL BY ENGINEER.

ADDITIONAL EROSION CONTROL DEVICES MAY NEED TO BE INSTALLED AS DIRECTED BY THE ENGINEER.

ENVIRONMENTALLY SENSITIVE AREA
PLEASE SEE NOTE

EROSION CONTROL PLAN

8/17/99

9/28/2009
C:\Working\TPA\d0135325\B4691_EC_psh.dgn

EROSION CONTROL PLAN

STATE OF NORTH CAROLINA DEPT. OF TRANSPORTATION DIVISION OF HIGHWAYS RALEIGH, N.C.

ENGLISH STANDARD DRAWING FOR **TEMPORARY SILT FENCE**

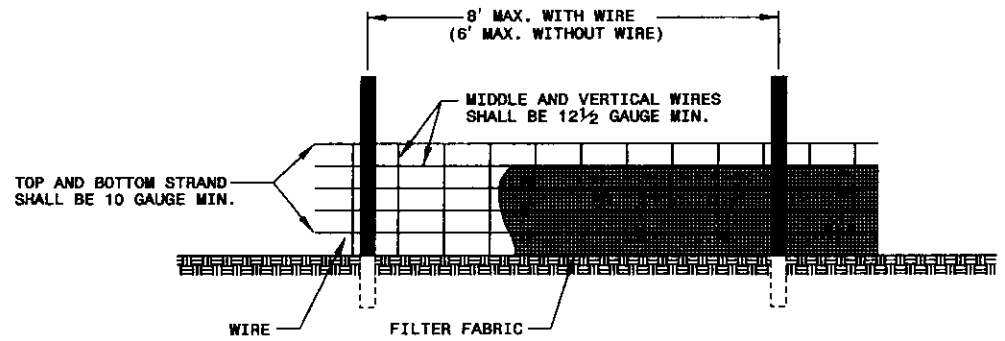

NOTES
USE WIRE A MINIMUM OF 32" IN WIDTH AND WITH A MINIMUM OF 6 LINE WIRES WITH 12" STAY SPACING.
USE FILTER FABRIC A MINIMUM OF 36" IN WIDTH AND FASTEN ADEQUATELY TO THE WIRE AS DIRECTED BY THE ENGINEER.
PROVIDE 5'-0" STEEL POST OF THE SELF-FASTENER ANGLE STEEL TYPE.

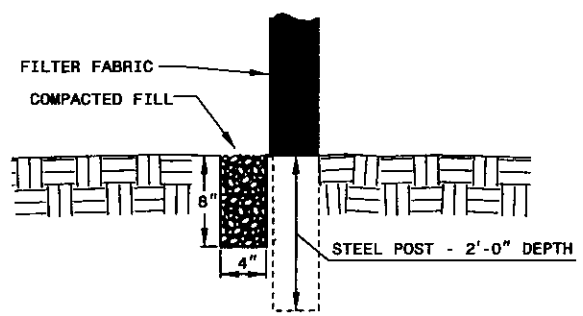

EXTENSION OF FABRIC AND WIRE INTO TRENCH

SHEET 1 OF 1 **1605.01**

STATE OF NORTH CAROLINA DEPT. OF TRANSPORTATION DIVISION OF HIGHWAYS RALEIGH, N.C.

ENGLISH STANDARD DRAWING FOR **TEMPORARY SILT FENCE**

SHEET 1 OF 1 **1605.01**

STATE OF NORTH CAROLINA DEPT. OF TRANSPORTATION DIVISION OF HIGHWAYS RALEIGH, N.C.

ENGLISH STANDARD DRAWING FOR **ROCK INLET SEDIMENT TRAP TYPE 'C'**

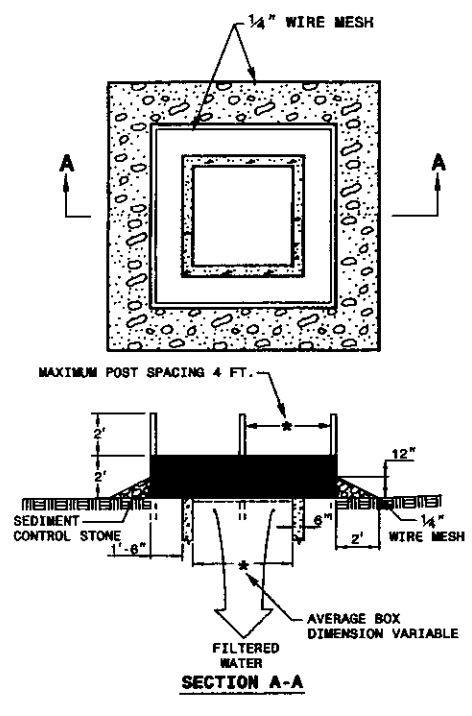

SECTION A-A

MULTI-DIRECTIONAL FLOW

NOTE
USE NO. 5 OR NO. 57 STONE FOR SEDIMENT CONTROL STONE.
USE 24 GAUGE MINIMUM WIRE MESH HARDWARE CLOTH WITH 1/4 INCH MESH OPENINGS.
PLACE TOP OF WIRE MESH A MINIMUM OF ONE FOOT BELOW THE SHOULDER OR ANY DIVERSION POINT.
INSTALL WIRE MESH UNDER SEDIMENT CONTROL STONE.
USE 5' STEEL POST, INSTALLED 1.5' DEEP MINIMUM, AND OF THE SELF-FASTENER ANGLE STEEL TYPE.
SPACE POST A MAXIMUM OF 4'.

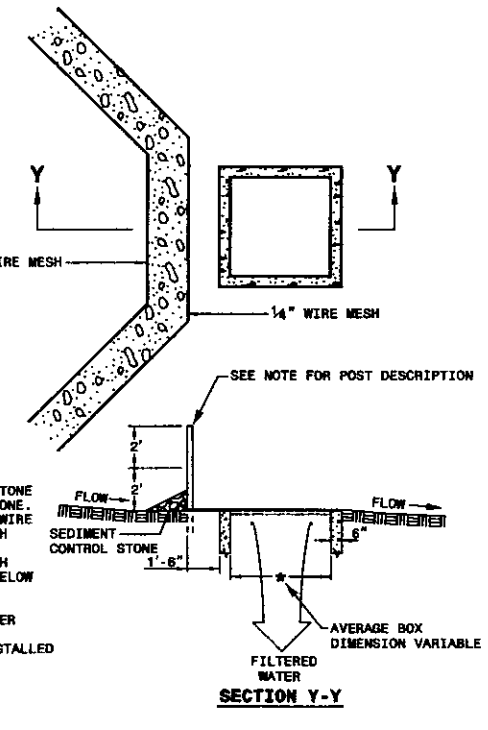

SECTION Y-Y

SINGLE-DIRECTIONAL FLOW

SHEET 1 OF 1 **1632.03**

STATE OF NORTH CAROLINA DEPT. OF TRANSPORTATION DIVISION OF HIGHWAYS RALEIGH, N.C.

ENGLISH STANDARD DRAWING FOR **ROCK INLET SEDIMENT TRAP TYPE 'C'**

SHEET 1 OF 1 **1632.03**

STATE OF NORTH CAROLINA DEPT. OF TRANSPORTATION DIVISION OF HIGHWAYS RALEIGH, N.C.

ENGLISH STANDARD DRAWING FOR **TEMPORARY DIVERSION**

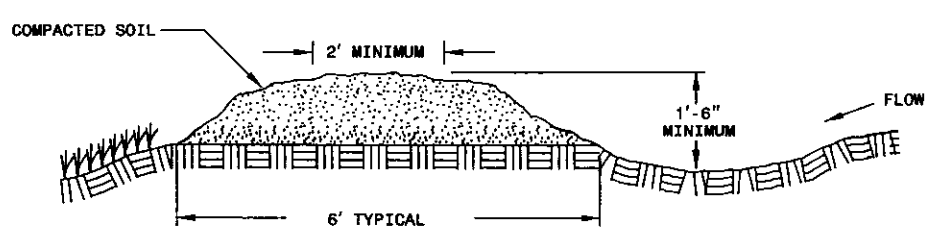

CROSS SECTIONAL VIEW

SHEET 1 OF 1 **1630.05**

STATE OF NORTH CAROLINA DEPT. OF TRANSPORTATION DIVISION OF HIGHWAYS RALEIGH, N.C.

ENGLISH STANDARD DRAWING FOR **TEMPORARY DIVERSION**

SHEET 1 OF 1 **1630.05**

ROADSIDE ENVIRONMENTAL UNIT
DEPARTMENT OF TRANSPORTATION
DIVISION OF HIGHWAYS
RALEIGH, N.C.

2006 STANDARD SPECIFICATIONS

NOTES: ANY DEVIATION FROM OPTIONS GIVEN WILL REQUIRE PRIOR APPROVAL BY ENGINEER.

ADDITIONAL EROSION CONTROL DEVICES MAY NEED TO BE INSTALLED AS DIRECTED BY THE ENGINEER.

8/17/99
9/22/2009
C:\Workspace\TPA\c0135325\B4691_EC_psh.dgn

EROSION CONTROL PLAN

STATE OF NORTH CAROLINA
DEPT. OF TRANSPORTATION
DIVISION OF HIGHWAYS
RALEIGH, N.C.

ENGLISH STANDARD DRAWING FOR
TEMPORARY ROCK SILT CHECK TYPE 'A'

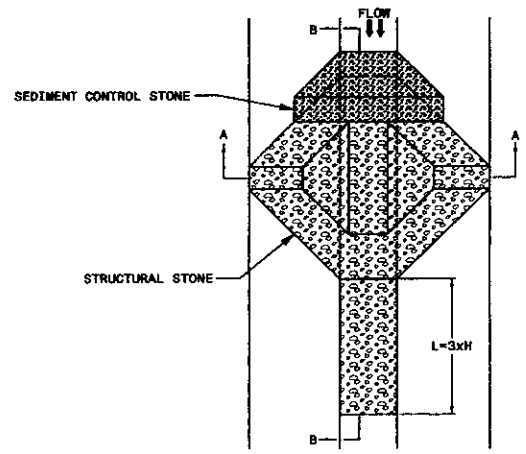

PLAN

NOTE
USE CLASS 'B' EROSION CONTROL STONE FOR STRUCTURAL STONE.
USE NO. 5 OR NO. 57 STONE FOR SEDIMENT CONTROL STONE.

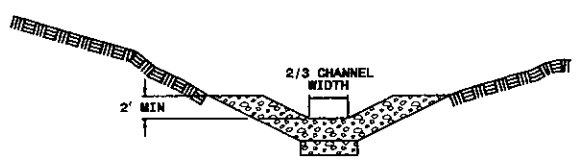

SECTION A-A

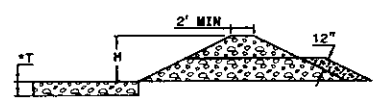

SECTION B-B
*T = 12" MIN., 18" MAX.

SHEET 1 OF 1
1633.01

STATE OF NORTH CAROLINA
DEPT. OF TRANSPORTATION
DIVISION OF HIGHWAYS
RALEIGH, N.C.

ENGLISH STANDARD DRAWING FOR
TEMPORARY ROCK SILT CHECK TYPE 'A'

SHEET 1 OF 1
1633.01

STATE OF NORTH CAROLINA
DEPT. OF TRANSPORTATION
DIVISION OF HIGHWAYS
RALEIGH, N.C.

ENGLISH STANDARD DRAWING FOR
TEMPORARY ROCK SEDIMENT DAM TYPE 'B'

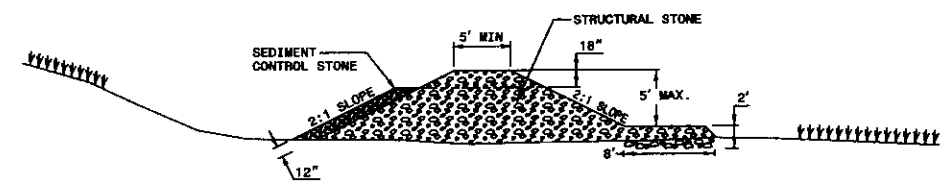

PROFILE SECTION

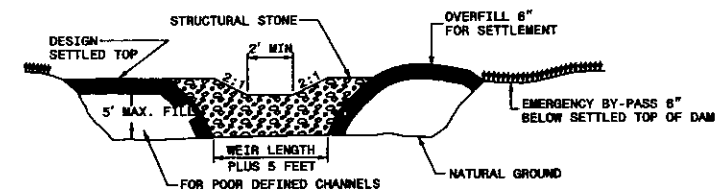

CROSS SECTION

DRAINAGE AREA (ACRES)	WEIR LENGTH (FT)
1	4.0
2	6.0
3	8.0
4	10.0
5	12.0

NOTES:
USE CLASS 'B' EROSION CONTROL STONE FOR STRUCTURAL STONE.
USE NO. 5 OR NO. 57 STONE FOR SEDIMENT CONTROL STONE.
DIKE MAY EXTEND ALONG MORE THAN ONE SIDE OF THE TRAP AREA. PROVIDE A TOTAL SEDIMENT STORAGE VOLUME OF 1800± CUBIC FEET PER ACRE OF DISTURBED AREA. SOME OF THE REQUIRED VOLUME MAY BE PROVIDED BY OTHER UP OR DOWNSTREAM CONTROLS.
AN UNDERLAY OF STRUCTURAL STONE WITH FILTER FABRIC MAY BE REQUIRED BY THE ENGINEER.

SHEET 1 OF 1
1634.02

STATE OF NORTH CAROLINA
DEPT. OF TRANSPORTATION
DIVISION OF HIGHWAYS
RALEIGH, N.C.

ENGLISH STANDARD DRAWING FOR
TEMPORARY ROCK SEDIMENT DAM TYPE 'B'

SHEET 1 OF 1
1634.02

TEMPORARY ROCK SILT CHECK TYPE 'B' DETAIL

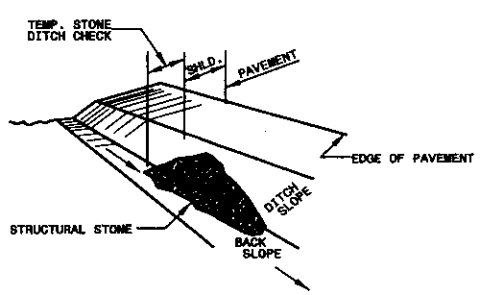

ISOMETRIC VIEW

NOTES:

USE CLASS 'B' EROSION CONTROL STONE FOR STRUCTURAL STONE.

THE ENGINEER MAY DIRECT THE OPTION OF CLASS "A" STONE FOR SITES HAVING LESS THAN ONE (1) ACRE DRAINAGE AREA AND A DITCH GRADE LESS THAN 3%.

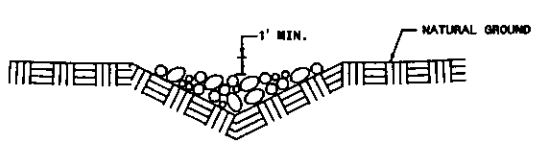

CROSS SECTION
VEE DITCH

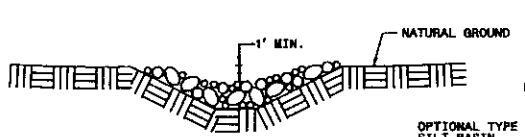

CROSS SECTION
TRAPEZOIDAL DITCH

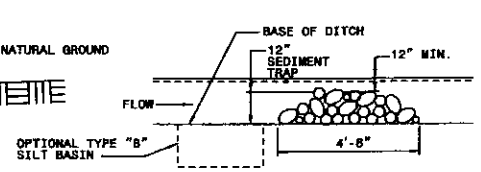

ELEVATION VIEW

COIR FIBER BAFFLE DETAIL

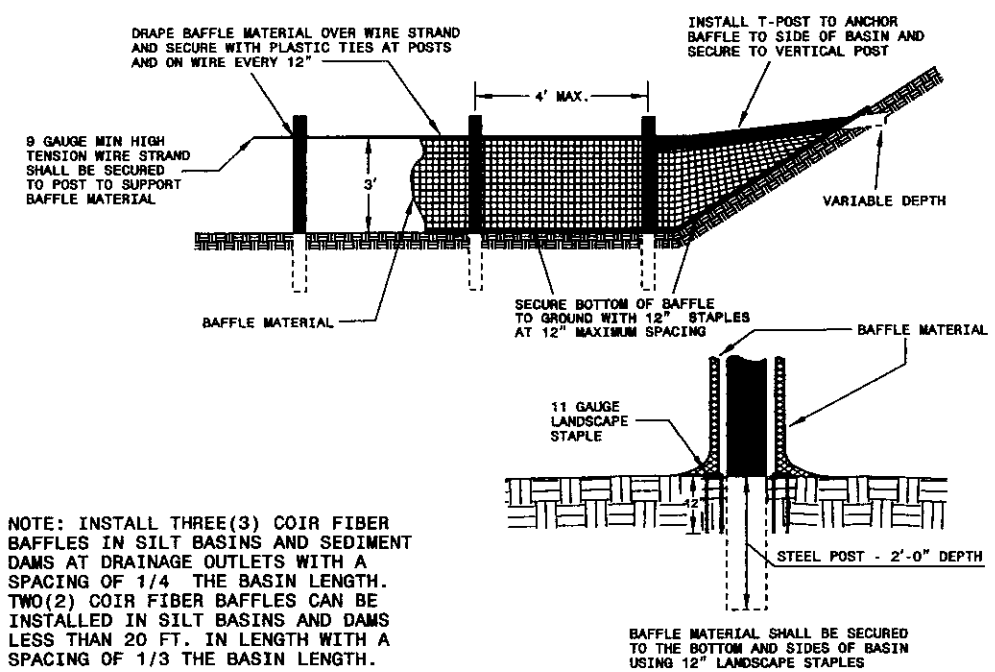

NOTE: INSTALL THREE(3) COIR FIBER BAFFLES IN SILT BASINS AND SEDIMENT DAMS AT DRAINAGE OUTLETS WITH A SPACING OF 1/4 THE BASIN LENGTH. TWO(2) COIR FIBER BAFFLES CAN BE INSTALLED IN SILT BASINS AND DAMS LESS THAN 20 FT. IN LENGTH WITH A SPACING OF 1/3 THE BASIN LENGTH.

ROADSIDE ENVIRONMENTAL UNIT
DEPARTMENT OF TRANSPORTATION
DIVISION OF HIGHWAYS
RALEIGH, N.C.

2006 STANDARD SPECIFICATIONS

NOTES: ANY DEVIATION FROM OPTIONS GIVEN WILL REQUIRE PRIOR APPROVAL BY ENGINEER.

ADDITIONAL EROSION CONTROL DEVICES MAY NEED TO BE INSTALLED AS DIRECTED BY THE ENGINEER.

8/17/99
9/22/2009
C:\PW_Working\TPA\d0135325\B4691_EC_psh.dgn

STATE	STATE PROJECT REFERENCE NO.	SHEET NO.	TOTAL SHEETS
N.C.	B-4691	42	42

STATE PROJ. NO.	F.A. PROJ. NO.	DESCRIPTION

PLANTING DETAILS

SEEDLING / LINER BAREROOT PLANTING DETAIL

HEALING IN

1. Locate a healing-in site in a shady, well protected area.
2. Excavate a flat bottom trench 12 inches deep and provide drainage.

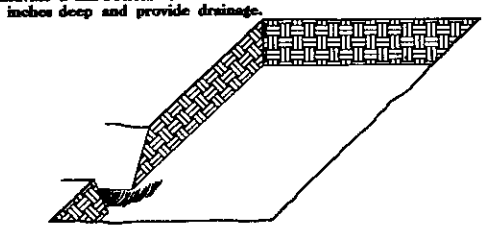

3. Backfill the trench with 2 inches well rotted sawdust. Place a 2 inch layer of well rotted sawdust at a sloping angle at one end of the trench.

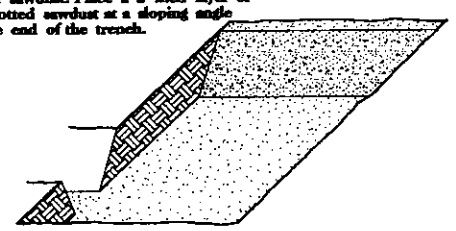

4. Place a single layer of plants against the sloping end so that the root collar is at ground level.

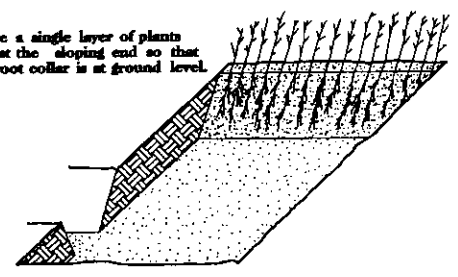

5. Place a 2 inch layer of well rotted sawdust over the roots maintaining a sloping angle.

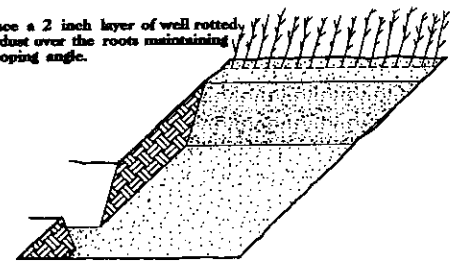

6. Repeat layers of plants and sawdust as necessary and water thoroughly.

DIBBLE PLANTING METHOD
USING THE KBC PLANTING BAR

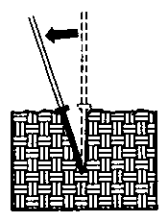

1. Insert planting bar as shown and pull handle toward planter.

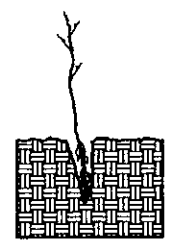

2. Remove planting bar and place seedling at correct depth.

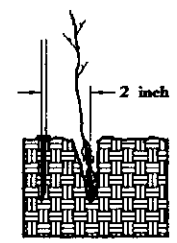

3. Insert planting bar 2 inches toward planter from seedling.

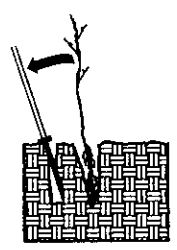

4. Pull handle of bar toward planter, firming soil at bottom.

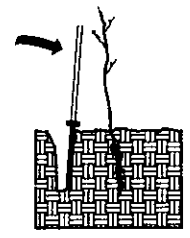

5. Push handle forward firming soil at top.

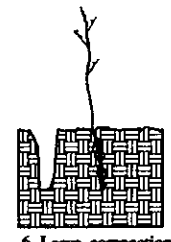

6. Leave compaction hole open. Water thoroughly.

PLANTING NOTES:

PLANTING BAG
During planting, seedlings shall be kept in a moist canvas bag or similar container to prevent the root systems from drying.

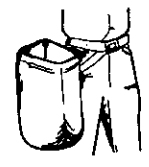

KBC PLANTING BAR
Planting bar shall have a blade with a triangular cross section, and shall be 12 inches long, 4 inches wide and 1 inch thick at center.

ROOT PRUNING
All seedlings shall be root pruned, if necessary, so that no roots extend more than 10 inches below the root collar.

REFORESTATION

☐ TREE REFORESTATION SHALL BE PLANTED 6 FT. TO 10 FT. ON CENTER, RANDOM SPACING, AVERAGING 8 FT. ON CENTER, APPROXIMATELY 680 PLANTS PER ACRE.

REFORESTATION

MIXTURE, TYPE, SIZE, AND FURNISH SHALL CONFORM TO THE FOLLOWING:

34%	LIRIODENDRON TULIPIFERA	TULIP POPLAR	12 in - 18 in BR
33%	PLATANUS OCCIDENTALIS	SYCAMORE	12 in - 18 in BR
33%	BETULA NIGRA	RIVER BIRCH	12 in - 18 in BR

REFORESTATION DETAIL SHEET

N.C.D.O.T. - ROADSIDE ENVIRONMENTAL UNIT