STATE OF NORTH CAROLINA
DEPARTMENT OF TRANSPORTATION
RALEIGH, N.C.

C203143

CONTRACT AND
CONTRACT BONDS

FOR CONTRACT NO. C203143

WBS	52000.3.STR01T4A FRA-FR-HSR-0006-10-01-
T.I.P NO.	P-5206A
COUNTY OF	ROWAN
THIS IS THE	ROADWAY & STRUCTURE CONTRACT
ROUTE NUMBER	SR 2538 LENGTH 0.854 MILES
LOCATION	SR-2538 (PEELER RD), SR-1560 (CEDAR SPRINGS RD) GRADE SEPARATION OVER NORFOLK SOUTHERN/NCRR RAILROAD.
CONTRACTOR	TRIANGLE GRADING & PAVING INC
ADDRESS	P.O. BOX 2570 BURLINGTON, NC 272162570
BIDS OPENED	MARCH 19, 2013
CONTRACT EXECUTION	APR 2 3 2013

STATE OF NORTH CAROLINA
DEPARTMENT OF TRANSPORTATION
RALEIGH, N.C.

PROPOSAL

DATE AND TIME OF BID OPENING: **MARCH 19, 2013 AT 2:00 PM**

CONTRACT ID	C203143
WBS	52000.3.STR01T4A
FEDERAL-AID NO.	FRA-FR-HSR-0006-10-01-
COUNTY	ROWAN
T.I.P. NO.	P-5206A
MILES	0.854
ROUTE NO.	SR-2538
LOCATION	SR-2538 (PEELER RD), SR-1560 (CEDAR SPRINGS RD) GRADE SEPARATION OVER NORFOLK SOUTHERN/NCRR RAILROAD.
TYPE OF WORK	GRADING, DRAINAGE, PAVING, SIGNALS, AND STRUCTURE.

NOTICE:

ALL BIDDERS SHALL COMPLY WITH ALL APPLICABLE LAWS REGULATING THE PRACTICE OF GENERAL CONTRACTING AS CONTAINED IN CHAPTER 87 OF THE GENERAL STATUTES OF NORTH CAROLINA WHICH REQUIRES THE BIDDER TO BE LICENSED BY THE N.C. LICENSING BOARD FOR CONTRACTORS WHEN BIDDING ON ANY NON-FEDERAL AID PROJECT WHERE THE BID IS $30,000 OR MORE, EXCEPT FOR CERTAIN SPECIALTY WORK AS DETERMINED BY THE LICENSING BOARD. BIDDERS SHALL ALSO COMPLY WITH ALL OTHER APPLICABLE LAWS REGULATING THE PRACTICES OF ELECTRICAL, PLUMBING, HEATING AND AIR CONDITIONING AND REFRIGERATION CONTRACTING AS CONTAINED IN CHAPTER 87 OF THE GENERAL STATUTES OF NORTH CAROLINA. NOT WITHSTANDING THESE LIMITATIONS ON BIDDING, THE BIDDER WHO IS AWARDED ANY PROJECT SHALL COMPLY WITH CHAPTER 87 OF THE GENERAL STATUTES OF NORTH CAROLINA FOR LICENSING REQUIREMENTS WITHIN 60 CALENDAR DAYS OF BID OPENING, REGARDLESS OF FUNDING SOURCES.

BIDS WILL BE RECEIVED AS SHOWN BELOW:

THIS IS A <u>ROADWAY & STRUCTURE</u> PROPOSAL

5% BID BOND OR BID DEPOSIT REQUIRED

PROPOSAL FOR THE CONSTRUCTION OF

CONTRACT No. C203143 IN ROWAN COUNTY, NORTH CAROLINA

Date_____ 20____

DEPARTMENT OF TRANSPORTATION,

RALEIGH, NORTH CAROLINA

The Bidder has carefully examined the location of the proposed work to be known as Contract No. **C203143**; has carefully examined the plans and specifications, which are acknowledged to be part of the proposal, the special provisions, the proposal, the form of contract, and the forms of contract payment bond and contract performance bond; and thoroughly understands the stipulations, requirements and provisions. The undersigned bidder agrees to bound upon his execution of the bid and subsequent award to him by the Board of Transportation in accordance with this proposal to provide the necessary contract payment bond and contract performance bond within fourteen days after the written notice of award is received by him. The undersigned Bidder further agrees to provide all necessary machinery, tools, labor, and other means of construction; and to do all the work and to furnish all materials, except as otherwise noted, necessary to perform and complete the said contract in accordance with *the 2012 Standard Specifications for Roads and Structures* by the dates(s) specified in the Project Special Provisions and in accordance with the requirements of the Engineer, and at the unit or lump sum prices, as the case may be, for the various items given on the sheets contained herein.

The Bidder shall provide and furnish all the materials, machinery, implements, appliances and tools, and perform the work and required labor to construct and complete State Highway Contract No. **C203143** in **Rowan County**, for the unit or lump sum prices, as the case may be, bid by the Bidder in his bid and according to the proposal, plans, and specifications prepared by said Department, which proposal, plans, and specifications show the details covering this project, and hereby become a part of this contract.

The published volume entitled *North Carolina Department of Transportation, Raleigh, Standard Specifications for Roads and Structures, January 2012* with all amendments and supplements thereto, is by reference incorporated into and made a part of this contract; that, except as herein modified, all the construction and work included in this contract is to be done in accordance with the specifications contained in said volume, and amendments and supplements thereto, under the direction of the Engineer.

If the proposal is accepted and the award is made, the contract is valid only when signed either by the Contract Officer or such other person as may be designated by the Secretary to sign for the Department of Transportation. The conditions and provisions herein cannot be changed except over the signature of the said Contract Officer.

The quantities shown in the itemized proposal for the project are considered to be approximate only and are given as the basis for comparison of bids. The Department of Transportation may increase or decrease the quantity of any item or portion of the work as may be deemed necessary or expedient.

An increase or decrease in the quantity of an item will not be regarded as sufficient ground for an increase or decrease in the unit prices, nor in the time allowed for the completion of the work, except as provided for the contract.

Accompanying this bid is a bid bond secured by a corporate surety, or certified check payable to the order of the Department of Transportation, for five percent of the total bid price, which deposit is to be forfeited as liquidated damages in case this bid is accepted and the Bidder shall fail to provide the required payment and performance bonds with the Department of Transportation, under the condition of this proposal, within 14 calendar days after the written notice of award is received by him, as provided in the *Standard Specifications*; otherwise said deposit will be returned to the Bidder.

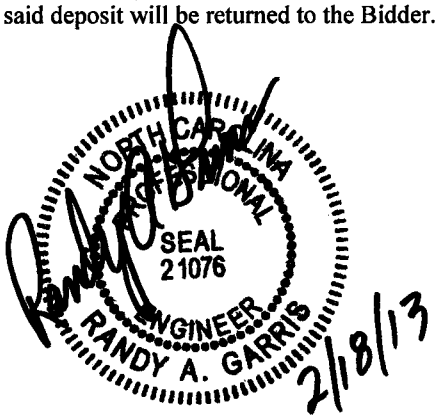

State Contract Officer

TABLE OF CONTENTS

COVER SHEET
PROPOSAL SHEET

PROJECT SPECIAL PROVISIONS

CONTRACT TIME AND LIQUIDATED DAMAGES: 1
INTERMEDIATE CONTRACT TIME NUMBER 1 AND LIQUIDATED DAMAGES: 1
INTERMEDIATE CONTRACT TIME NUMBER 2 AND LIQUIDATED DAMAGES: 2
INTERMEDIATE CONTRACT TIME NUMBER 3 AND LIQUIDATED DAMAGES: 3
INTERMEDIATE CONTRACT TIME NUMBER 4 AND LIQUIDATED DAMAGES: 3
INTERMEDIATE CONTRACT TIME NUMBER 5 AND LIQUIDATED DAMAGES: 3
PERMANENT VEGETATION ESTABLISHMENT: 4
DELAY IN RIGHT OF ENTRY: 4
MAJOR CONTRACT ITEMS: 5
SPECIALTY ITEMS: 5
FUEL PRICE ADJUSTMENT: 5
SCHEDULE OF ESTIMATED COMPLETION PROGRESS: 6
DISADVANTAGED BUSINESS ENTERPRISE FOR RAILROAD PIEDMONT IMPROVEMENT PLAN (PIP): 6
ARRA AND OERI CONTRACT PROVISIONS AND REPORTING REQUIREMENT CERTIFICATION: 14
CERTIFICATION FOR FEDERAL-AID CONTRACTS: 20
CONTRACTOR'S LICENSE REQUIREMENTS: 20
U.S. DEPARTMENT OF TRANSPORTATION HOTLINE: 20
SUBSURFACE INFORMATION: 21
LOCATING EXISTING UNDERGROUND UTILITIES: 21
MAINTENANCE OF THE PROJECT: 21
TWELVE MONTH GUARANTEE: 22
GIFTS FROM VENDORS AND CONTRACTORS: 22
EROSION AND SEDIMENT CONTROL/STORMWATER CERTIFICATION: 23
PROCEDURE FOR MONITORING BORROW PIT DISCHARGE: 28
EMPLOYMENT: 29
STATE HIGHWAY ADMINISTRATOR TITLE CHANGE: 29
PROGRESS SCHEDULE (RAIL): 29A
ROADWAY 30
GEOTECHNICAL 59
GEOENVIRONMENTAL 62
UTILITY CONSTRUCTION 63
UTILITIES BY OTHERS 67
EROSION CONTROL 69
SIGNALS AND INTELLIGENT TRANSPORTATION SYSTEMS 88
PROJECT SPECIAL PROVISIONS STRUCTURE / CULVERTS 109

PERMITS R-1

STANDARD SPECIAL PROVISIONS

AVAILABILITY OF FUNDS – TERMINATION OF CONTRACTS 1
NCDOT GENERAL SEED SPECIFICATION FOR SEED QUALITY 2
ERRATA 5
PLANT AND PEST QUARANTINES 7
AWARD OF CONTRACT 8
MINORITY AND FEMALE EMPLOYMENT REQUIREMENTS 9
REQUIRED CONTRACT PROVISIONS FEDERAL - AID CONSTRUCTION CONTRACTS 12
ON-THE-JOB TRAINING 21
MINIMUM WAGES 24

PROPOSAL ITEM SHEET AND SIGNATURE SHEET

ITEM SHEET(S) (TAN SHEETS)
SIGNATURE SHEET (BID ACCEPTANCE BY DEPARTMENT)

PROJECT SPECIAL PROVISIONS

GENERAL

CONTRACT TIME AND LIQUIDATED DAMAGES:
(8-15-00) (Rev. 12-18-07) 108 SP1 G07 A

The date of availability for this contract is **April 29, 2013**, except that work in jurisdictional waters and wetlands shall not begin until a meeting between the DOT, Regulatory Agencies, and the Contractor is held as stipulated in the permits contained elsewhere in this proposal. This delay in availability has been considered in determining the contract time for this project.

The completion date for this contract is **November 28, 2015**.

Except where otherwise provided by the contract, observation periods required by the contract will not be a part of the work to be completed by the completion date and/or intermediate contract times stated in the contract. The acceptable completion of the observation periods that extend beyond the final completion date shall be a part of the work covered by the performance and payment bonds.

The liquidated damages for this contract are **Two Hundred Dollars ($200.00)** per calendar day. These liquidated damages will not be cumulative with any liquidated damages which may become chargeable under Intermediate Contract Time Number 1.

INTERMEDIATE CONTRACT TIME NUMBER 1 AND LIQUIDATED DAMAGES:
(7-1-95) (Rev. 2-21-12) 108 SP1 G13 A

Except for that work required under the Project Special Provisions entitled *Planting, Reforestation* and/or *Permanent Vegetation Establishment*, included elsewhere in this proposal, the Contractor will be required to complete all work included in this contract and shall place and maintain traffic on same.

The date of availability for this intermediate contract time is **April 29, 2013**.

The completion date for this intermediate contract time is **June 1, 2015**.

The liquidated damages for this intermediate contract time are **One Thousand Dollars ($1,000.00)** per calendar day.

Upon apparent completion of all the work required to be completed by this intermediate date, a final inspection will be held in accordance with Article 105-17 and upon acceptance, the Department will assume responsibility for the maintenance of all work except *Planting, Reforestation* and/or *Permanent Vegetation Establishment*. The Contractor will be responsible for and shall make corrections of all damages to the completed roadway caused by his planting operations, whether occurring prior to or after placing traffic through the project.

INTERMEDIATE CONTRACT TIME NUMBER 2 AND LIQUIDATED DAMAGES:
(2-20-07) 108 SPI G14 B

The Contractor shall not narrow or close a lane of traffic on **all roads**, detain and /or alter the traffic flow on or during holiday weekends, special events, or any other time when traffic is unusually heavy, including the following schedules:

HOLIDAY AND HOLIDAY WEEKEND LANE CLOSURE RESTRICTIONS

1. For **unexpected occurrence** that creates unusually high traffic volumes, as directed by the Engineer.

2. For **New Year's Day**, between the hours of **4:00 PM** December 31st and **9:00 AM** January 2nd. If New Year's Day is on a Friday, Saturday, Sunday or Monday, then until **9:00 AM** the following Tuesday.

3. For **Easter**, between the hours of **4:00 PM** Thursday and **9:00 AM** Monday.

4. For **Memorial Day**, between the hours of **4:00 PM** Friday and **9:00 AM** Tuesday.

5. For **Independence Day**, between the hours of **4:00 PM** the day before Independence Day and **9:00 AM** the day after Independence Day.

   If **Independence Day** is on a Friday, Saturday, Sunday or Monday, then between the hours of **4:00 PM** the Thursday before Independence Day and **9:00 AM** the Tuesday after Independence Day.

6. For **Labor Day**, between the hours of **4:00 PM** Friday and **9:00 AM** Tuesday.

7. For **Thanksgiving Day**, between the hours of **4:00 PM** Tuesday and **9:00 AM** Monday.

8. For **Christmas**, between the hours of **4:00 PM** the Friday before the week of Christmas Day and **9:00 AM** the following Tuesday after the week of Christmas Day.

Holidays and holiday weekends shall include New Year's, Easter, Memorial Day, Independence Day, Labor Day, Thanksgiving, and Christmas. The Contractor shall schedule his work so that lane closures are not required during these periods, unless otherwise directed by the Engineer.

The time of availability for this intermediate contract work shall be the time the Contractor begins to install all traffic control devices for lane closures according to the time restrictions listed herein.

The completion time for this intermediate contract work shall be the time the Contractor is required to complete the removal of all traffic control devices for lane closures according to the time restrictions stated herein and place traffic in the existing traffic pattern.

The liquidated damages are **Five Hundred Dollars** (**$500.00**) per hour.

INTERMEDIATE CONTRACT TIME NUMBER 3 AND LIQUIDATED DAMAGES:
(2-20-07) 108 SP1 G14 E

The Contractor shall complete the required work of installing, maintaining and removing the traffic control devices for road closures and restoring traffic to the existing traffic pattern. The Contractor shall not close **US 29** during the following time restrictions:

DAY AND TIME RESTRICTIONS

Sunday to Saturday from 6:00 AM to Midnight

The maximum allowable time for girder installation is **30** minutes for **US 29**. The Contractor shall reopen the travel lanes to traffic until the existing traffic queue is depleted.

The time of availability for this intermediate contract time will be the time the Contractor begins to install traffic control devices required for the road closures according to the time restrictions stated herein.

The completion time for this intermediate contract time will be the time the Contractor is required to complete the removal of traffic control devices required for the road closures according to the time restrictions stated herein and restore traffic to the existing traffic pattern.

The liquidated damages are **Five Hundred Dollars ($500.00)** per **15** minute time period.

INTERMEDIATE CONTRACT TIME NUMBER 4 AND LIQUIDATED DAMAGES:
(2-20-07) 108 SP1 G14 H

The Contractor shall complete the work required of **Phase II, Step 1** as shown on Sheet(s) **TCP- 2** and shall place and maintain traffic on same.

The date of availability for this intermediate contract time is the date the Contractor elects to begin the work.

The completion date for this intermediate contract time is the date which is **fourteen 14** consecutive calendar days after and including the date the Contractor begins this work.

The liquidated damages are **Five Hundred Dollars ($ 500.00)** per calendar day.

INTERMEDIATE CONTRACT TIME NUMBER 5 AND LIQUIDATED DAMAGES:
(2-20-07) 108 SP1 G14 H

The Contractor shall complete the work required of **Phase II, Step 2** as shown on Sheet(s) **TCP-2** and shall place and maintain traffic on same.

The date of availability for this intermediate contract time is the date the Contractor elects to begin the work.

The completion date for this intermediate contract time is the date which is **fourteen 14** consecutive calendar days after and including the date the Contractor begins this work.

The liquidated damages are **Five Hundred Dollars ($ 500.00)** per calendar day.

PERMANENT VEGETATION ESTABLISHMENT:
(2-16-12) 104 SP1 G16

Establish a permanent stand of the vegetation mixture shown in the contract. During the period between initial vegetation planting and final project acceptance, perform all work necessary to establish 80% coverage of permanent vegetation within the project limits, as well as, in borrow and waste pits. This work shall include erosion control device maintenance and installation, repair seeding and mulching, supplemental seeding and mulching, mowing, and fertilizer topdressing, as directed. All work shall be performed in accordance with the applicable section of the *2012 Standard Specifications*.

Once the Engineer has determined that 80% coverage of permanent vegetation has been established, the Contractor will be notified to remove the remaining erosion control devices that are no longer needed. The Contractor will be responsible for, and shall correct any areas disturbed by operations performed in permanent vegetation establishment and the removal of temporary erosion control measures, whether occurring prior to or after placing traffic on the project.

Payment for *Response for Erosion Control, Seeding and Mulching, Repair Seeding, Supplemental Seeding, Mowing, Fertilizer Topdressing, Silt Excavation,* and *Stone for Erosion Control* will be made at contract unit prices for the affected items. Work required that is not represented by contract line items will be paid in accordance with Articles 104-7 or 104-3 of the *2012 Standard Specifications*. No additional compensation will be made for maintenance and removal of temporary erosion control items.

DELAY IN RIGHT OF ENTRY:
(7-1-95) 108 SP1 G22 A

The Contractor will not be allowed right of entry to the parcels listed below **until May 19, 2013** unless otherwise permitted by the Engineer.

Parcel No.	Property Owner
002A	Lester Wayne Honeycutt
005A	Jose Pedro Colocho-Gonalalez
006A	Alfred Ray Cauble, Jr.
018A	Johnny R. Morgan
027A	Liberty Healthcare Properties
042A	Nancy Barrow/Cory Orbison
043A	Nancy Cook Barrow
044A	Edward E. Orbison, Jr.
048A	Rubber One Recycling, Inc.
050A	Robert Del Powers

MAJOR CONTRACT ITEMS:

(2-19-02) 104 SP1 G28

The following listed items are the major contract items for this contract (see Article 104-5 of the *2012 Standard Specifications*):

Line #	Description
9	Borrow Excavation
43	Asphalt Concrete Base Course, Type B25.0B
45	Asphalt Concrete Surface Course, Type S9.5B

SPECIALTY ITEMS:

(7-1-95)(Rev. 1-17-12) 108-6 SP1 G37

Items listed below will be the specialty items for this contract (see Article 108-6 of the *2012 Standard Specifications*).

Line #	Description
76 thru 83	Guardrail
87 thru 94	Signing
108 thru 114	Long-Life Pavement Markings
119	Permanent Pavement Markers
120 thru 125	Utility Construction
126 thru 154	Erosion Control
155 thru 174	Signals/ITS System

FUEL PRICE ADJUSTMENT:

(11-15-05) (Rev. 1-17-12) 109-8 SP1 G43

Revise the *2012 Standard Specifications* as follows:

Page 1-83, Article 109-8, Fuel Price Adjustments, add the following:

The base index price for DIESEL #2 FUEL is **$ 3.2793** per gallon. Where any of the following are included as pay items in the contract, they will be eligible for fuel price adjustment.

The pay items and the fuel factor used in calculating adjustments to be made will be as follows:

Description	Units	Fuel Usage Factor Diesel
Unclassified Excavation	Gal/CY	0.29
Borrow Excavation	Gal/CY	0.29
Class IV Subgrade Stabilization	Gal/Ton	0.55
Aggregate Base Course	Gal/Ton	0.55
Asphalt Concrete Base Course, Type ____	Gal/Ton	2.90
Asphalt Concrete Intermediate Course, Type ____	Gal/Ton	2.90
Asphalt Concrete Surface Course, Type ____	Gal/Ton	2.90
Open-Graded Asphalt Friction Course	Gal/Ton	2.90
Sand Asphalt Surface Course, Type ____	Gal/Ton	2.90
Aggregate for Cement Treated Base Course	Gal/Ton	0.55
Portland Cement for Cement Treated Base Course	Gal/Ton	0.55
__" Portland Cement Concrete Pavement	Gal/SY	0.245
Concrete Shoulders Adjacent to __" Pavement	Gal/SY	0.245

SCHEDULE OF ESTIMATED COMPLETION PROGRESS:

(7-15-08) (Rev. 6-19-12) 108-2 SP1 G58

The Contractor's attention is directed to the Standard Special Provision entitled *Availability of Funds Termination of Contracts* included elsewhere in this proposal. The Department of Transportation's schedule of estimated completion progress for this project as required by that Standard Special Provision is as follows:

	Fiscal Year	Progress (% of Dollar Value)
2013	(7/01/12 - 6/30/13)	12% of Total Amount Bid
2014	(7/01/13 - 6/30/14)	58% of Total Amount Bid
2015	(7/01/14 - 6/30/15)	30% of Total Amount Bid

The Contractor shall also furnish his own progress schedule in accordance with Article 108-2 of the *2012 Standard Specifications*. Any acceleration of the progress as shown by the Contractor's progress schedule over the progress as shown above shall be subject to the approval of the Engineer.

DISADVANTAGED BUSINESS ENTERPRISE FOR RAILROAD PIEDMONT IMPROVEMENT PLAN (PIP):

(12-18-12) 102-15(J) SP1 G64

Description

The purpose of this Special Provision is to promote the solicitation and use of disadvantaged minority and woman-owned businesses in the rail PIP projects let by the Department of Transportation.

Definitions

Aspirational Goal - The portion of the total contract, expressed as a percentage, that is foreseeable to be performed by DBE subcontractors.

Disadvantaged Business Enterprise (DBE) - A firm certified as a Disadvantaged Business Enterprise through the North Carolina Unified Certification Program.

Pledged DBE Subcontractor - Any DBE submitted at the time of bid that is being used to meet the DBE aspirational goal.

Pledged DBE Goal - The DBE participation at time of award, as determined by the amount of pledged DBE participation submitted.

Confirmation Letter - Written documentation from the Department to the bidder confirming the Contractor's approved, pledged DBE participation along with the listing of the DBE firms.

Manufacturer - A firm that operates or maintains a factory or establishment that produces on the premises, the materials or supplies obtained by the Contractor.

Regular Dealer - A firm that owns, operates, or maintains a store, warehouse, or other establishment in which the materials or supplies required for the performance of the contract are brought, kept in stock, and regularly sold to the public in the usual course of business. A regular dealer engages in, as its principal business and in its own name, the purchase and sale or lease of the products in question. A regular dealer in such bulk items as steel, cement, gravel, stone, and petroleum products need not keep such products in stock, if it owns and operates distribution equipment for the products. Brokers and packagers are not regarded as manufacturers or regular dealers within the meaning of this section.

North Carolina Unified Certification Program (NCUCP) - A program that provides comprehensive services and information to applicants for DBE certification, such that an applicant is required to apply only once for a DBE certification that will be honored by all recipients of USDOT funds in the state.

Forms and Websites Referenced in this Provision

Affidavit A - Listing of Good Faith Efforts - Form signed by bidder listing good faith efforts performed. This form is required if the lowest responsive and responsible bidder fails to meet or exceed the aspirational goal.
http://files.www.piedmontrail.biz/primary-navigation/prequalification-requirements/PIP_DBE_provision.pdf

DBE Payment Tracking System - On-line system in which the Contractor enters the payments made to DBE subcontractors who have performed work on the project. https://apps.dot.state.nc.us/Vendor/PaymentTracking/

DBE-IS *Subcontractor Payment Information* - Form for reporting the payments made to all DBE firms working on the project. This form is for paper bid projects only. http://www.ncdot.org/doh/forms/files/DBE-IS.xls

RF-1 *DBE Replacement Request Form* - Form for replacing a committed DBE.
https://connect.ncdot.gov/projects/construction/Construction%20Forms/DBE%20MBE%20WBE%20Replacement%20Request%20Form.pdf

SAF *Subcontract Approval Form* - Form required for approval to sublet the contract.
https://connect.ncdot.gov/projects/construction/Construction%20Forms/Subcontractor%20Approval%20Form.zip

JC-1 *Joint Check Notification Form* - Form and procedures for joint check notification. The form acts as a written joint check agreement among the parties providing full and prompt disclosure of the expected use of joint checks.
https://connect.ncdot.gov/projects/construction/Construction%20Forms/Joint%20Check%20Notification%20Form.pdf

Letter of Intent - Form signed by the Contractor and the DBE subcontractor, manufacturer or regular dealer that affirms that a portion of said contract is going to be performed by the signed DBE for the amount listed at the time of bid.
https://connect.ncdot.gov/letting/LetCentral/Letter%20of%20Intent%20to%20Perform%20as%20a%20Subcontractor.pdf

Listing of DBE Subcontractors Form - Form for entering DBE subcontractors on a project that will meet this DBE goal. This form is for paper bids only.
http://www.ncdot.gov/doh/preconstruct/ps/word/MISC2.doc

Aspirational DBE Goal

In line with the federal aspirational goal, the following DBE aspirational goal for participation by Disadvantaged Business Enterprises is established for this contract:

Disadvantaged Business Enterprises **10.0 %**

Even though the goal is aspirational, the expectation is that the Contractor shall exercise all reasonable steps to achieve the goal. Such steps include, but are not limited to:

(A) Clearly defining and disseminating information to DBEs on portions of the work that is available on the project so DBEs are provided an equitable opportunity to participate on the PIP contracts let by the Department.

(B) Solicit through reasonable and available means to try and achieve the aspirational goal.

(C) Providing adequate information and arranging a location for the review of plans, specifications and requirements of the contract.

(D) Providing assistance to DBEs in overcoming barriers such as the inability to obtain bonding, lines of credit, insurance, materials, equipment or related assistance or services.

Directory of Transportation Firms (Directory)

Real-time information is available about firms doing business with the Department and firms that are DBE certified through the NC UCP in the NCDOT Directory of Transportation Firms. Only firms identified in the Directory as DBE certified shall be used to meet the aspirational DBE goal of the project. The Directory can be found at the following link:
https://partner.ncdot.gov/VendorDirectory/default.html

The listing of an individual firm in the directory shall not be construed as an endorsement of the firm's capability to perform the work.

Listing of DBE Subcontractors

At the time of bid, bidders shall submit all the DBE participation that they anticipate to use during the life of the contract. Since the Rail DBE program is race and gender-neutral, all participation up to and over the 10% aspirational goal will be used toward the Department's race and gender-neutral goal for rail projects. Only those firms with current DBE certification at the time of bid opening will be acceptable for listing in the bidder's submittal of DBE participation. The bidder shall indicate the following required information:

(A) Electronic Bids

Bidders shall submit a listing of DBE participation in the appropriate section of Expedite, the bidding software of Bid Express®.

(1) Submit the names and addresses of DBE firms identified to participate in the contract. If the bidder uses the updated listing of DBE firms shown in Expedite, the bidder may use the dropdown menu to access the name and address of the DBE firm.

(2) Submit the contract line numbers of work to be performed by each DBE firm. When no figures or firms are entered, the bidder will be considered to have no DBE participation.

(3) The bidder shall be responsible for ensuring that the DBE is certified at the time of bid by checking the Directory of Transportation Firms. If the firm is not certified at the time of the bid-letting, that DBE's participation will not count towards achieving the aspirational DBE goal.

(B) Paper Bids

(1) Bidders, at the time the bid proposal is submitted, shall submit a listing of DBE participation, including the names and addresses on the Listing of DBE Subcontractors form.

(2) The bidder shall be responsible for ensuring that the DBE is certified at the time of bid by checking the Directory of Transportation Firms. If the firm is not certified at the time of the bid-letting, that DBE's participation will not count towards achieving the aspirational DBE goal.

DBE Prime Contractor

When a certified DBE firm bids on a rail PIP contract that contains an aspirational DBE goal, the DBE firm by virtue of the work it performs on the contract with its own forces, will meet the DBE aspirational goal. The DBE bidder shall list itself along with any other DBE subcontractors on the Listing of DBE Subcontractor form and the amount of work by each.

Written Documentation – Letter of Intent

The bidder shall submit written documentation for each DBE that will be used on the project to meet the aspirational goal of the contract, indicating the bidder's intent to use the DBE in the contract. This documentation shall be submitted on the Department's form titled *Letter of Intent*. The purpose of this documentation is to make the DBE aware that their quote is being used on the project. The documentation is not intended to take the place of a formal contract between the Contractor and the DBE subcontractor.

A hard or electronic copy of the Letter(s) of Intent shall be received in the office of the State Contractor Utilization Engineer or at DBE@ncdot.gov no later than 12:00 noon of the sixth calendar day following opening of bids, unless the sixth day falls on an official state holiday. In that situation, it is due in the office of the State Contractor Utilization Engineer no later than 12:00 noon on the next official state business day.

Submission of Good Faith Effort

While the lowest responsible and responsive bidder will not be denied award of the contracted based on failing to meet the advertised aspirational goal, the Department expects that the bidder will put forth a good faith effort to meet it. If the bidder fails to meet or exceed the aspirational DBE goal, the apparent lowest responsive bidder shall submit Affidavit A - Listing of Good Faith Efforts. A hard or electronic copy of the Affidavit shall be received in the office of the State Contractor Utilization Engineer or at DBE@ncdot.gov no later than 12:00 noon of the sixth calendar day following opening of bids, unless the sixth day falls on an official state holiday. In that situation, it is due in the office of the State Contractor Utilization Engineer no later than 12:00 noon on the next official state business day.

Counting DBE Participation Toward Meeting the DBE Aspirational Goal

(A) Participation

The total dollar value of the participation by a submitted DBE will be counted toward the aspirational goal of the contract. The total dollar value of the participation by a DBE will be based upon the value of work actually performed by the DBE and the actual payments to the DBE firms by the Contractor.

(B) Joint Checks

Prior notification of joint check use shall be required when counting DBE participation for services or purchases that involves the use of a joint check. Notification shall be through submission of the Form JC-1 *(Joint Check Notification Form)* and the use of joint checks shall be in accordance with the Department's Joint Check Procedures.

(C) Subcontracts (Non-Trucking)

A DBE may enter into subcontracts. Work that a DBE subcontracts to another DBE firm may be counted toward the aspirational goal. Work that a DBE subcontracts to a non-DBE firm does not count toward the aspirational goal of the contract.

(D) Joint Venture

When a DBE performs as a participant in a joint venture, the Contractor may count toward its aspirational goal a portion of the total value of participation with the DBE in the joint venture, that portion of the total dollar value being a distinct clearly defined portion of work that the DBE performs with its own forces.

(E) Suppliers

A contractor may count toward its aspirational DBE goal 60 percent of its expenditures for materials and supplies required to complete the contract and obtained from a DBE regular dealer and 100 percent of such expenditures from a DBE manufacturer.

(F) Other

A contractor may count toward its aspirational DBE goal the following expenditures to DBE firms that are not manufacturers or regular dealers:

(1) The fees or commissions charged by a DBE firm for providing a *bona fide* service, such as professional, technical, consultant, or managerial services, or for providing bonds or insurance specifically required for the performance of a DOT-assisted contract, provided the fees or commissions are determined to be reasonable and not excessive as compared with fees and commissions customarily allowed for similar services.

(2) With respect to materials or supplies purchased from a DBE, which is neither a manufacturer nor a regular dealer, count the entire amount of fees or commissions charged for assistance in the procurement of the materials and supplies, or fees or transportation charges for the delivery of materials or supplies required on a job site (but not the cost of the materials and supplies themselves), provided the fees are determined to be reasonable and not excessive as compared with fees customarily allowed for similar services.

Commercially Useful Function

Even though the goal on the rail PIP project is aspirational, there is still a requirement that the DBEs performing on the project will perform a commercially useful function in the work of a contract. The Contractor may only count/report towards the aspirational goal only expenditures to DBEs that perform a commercially useful function.

(A) A DBE performs a commercially useful function when it is responsible for execution of the work of the contract and is carrying out its responsibilities by actually performing, managing, and supervising the work involved. To perform a commercially useful function, the DBE shall also be responsible with respect to materials and supplies used on the contract, for negotiating price, determining quality and quantity, ordering the material and installing (where applicable) and paying for the material itself. To determine whether a DBE is performing a commercially useful function, the Department will evaluate the amount of work subcontracted, industry practices, whether the amount the firm is to be paid under the contract is commensurate with the work it is actually performing and the DBE credit claimed for its performance of the work, and any other relevant factors.

(B) DBE Utilization in Trucking

The following factors will be used to determine if a DBE trucking firm is performing a commercially useful function:

(1) The DBE shall be responsible for the management and supervision of the entire trucking operation for which it is responsible on a particular contract, and there shall not be a contrived arrangement for the purpose of meeting the aspirational DBE goal.

(2) The DBE shall itself own and operate at least one fully licensed, insured, and operational truck used on the contract.

(3) The DBE receives credit for the total value of the transportation services it provides on the contract using trucks it owns, insures, and operates using drivers it employs.

(4) The DBE may subcontract the work to another DBE firm, including an owner-operator who is certified as a DBE. The DBE who subcontracts work to another DBE receives credit for the total value of the transportation services the subcontracted DBE provides on the contract.

(5) The DBE may also subcontract the work to a non-DBE firm, including from an owner-operator. The DBE who subcontracts the work to a non-DBE is entitled to credit for the total value of transportation services provided by the non-DBE subcontractor not to exceed the value of transportation services provided by DBE-owned trucks on the contract. Additional participation by non-DBE subcontractors receives credit only for the fee or commission it receives as a result of the subcontract arrangement. The value of services performed under subcontract agreements between the DBE and the Contractor will not count towards the DBE credit for the project.

(6) A DBE may lease truck(s) from an established equipment leasing business open to the general public. The lease must indicate that the DBE has exclusive use of and control over the truck. This requirement does not preclude the leased truck from working for others during the term of the lease with the consent of the DBE, so long as the lease gives the DBE absolute priority for use of the leased truck. This type of lease may count toward the DBE's credit as long as the driver is under the DBE's payroll.

(7) Subcontracted/leased trucks shall display clearly on the dashboard the name of the DBE that they are subcontracted/leased to and their own company name if it is not identified on the truck itself. Magnetic door signs are not permitted.

Changes in the Work and Replacement of Pledged DBEs

Throughout the contract there may be changes made by the Engineer or Contractor that result in the reduction or elimination of work that was proposed to be performed by a DBE. Since the goals are aspirational, the Contractor will not be required to seek additional participation elsewhere on the project, but there is an expectation that there will be a continued effort to get DBEs on the job.

If the Engineer or Contractor makes changes that result in additional work to be performed by a DBE based on the Contractor's pledged DBE submittal, the Department has an expectation that the DBE shall participated in the additional work to the same extent as the DBE participated in the original work unless there is a viable reason.

If a DBE cannot perform the work for any reason, there is not a requirement to replace the DBE with another, but there is an expectation by the Department that the Contractor will continue to seek additional DBE participation opportunities on the project. The Department also requires the use of the *DBE Replacement Request Form* (RF-1) for tracking purposes.

Reporting Disadvantaged Business Enterprise Participation

The Contractor shall provide the Engineer with an accounting of payments made to all DBE firms, including material suppliers and contractors at all levels (prime, subcontractor, or second tier subcontractor). This accounting shall be furnished to the Engineer for any given month by the end of the following month. Failure to submit this information accordingly may result in the following action:

(A) Withholding of money due in the next partial pay estimate; or

(B) Removal of an approved contractor from the prequalified bidders' list or the removal of other entities from the approved subcontractors list.

While each contractor (prime, subcontractor, 2nd tier subcontractor) is responsible for accurate accounting of payments to DBEs, it shall be the prime contractor's responsibility to report all monthly and final payment information in the correct reporting manner.

Failure on the part of the Contractor to submit the required information in the time frame specified may result in the disqualification of that contractor and any affiliate companies from further bidding until the required information is submitted.

Failure on the part of any subcontractor to submit the required information in the time frame specified may result in the disqualification of that contractor and any affiliate companies from being approved for work on future DOT projects until the required information is submitted.

Contractors reporting transportation services provided by non-DBE lessees shall evaluate the value of services provided during the month of the reporting period only.

At any time, the Engineer can request written verification of subcontractor payments.

(A) Electronic Bids Reporting

The Contractor shall report the accounting of payments through the Department's DBE Payment Tracking System.

(B) Paper Bids Reporting

The Contractor shall report the accounting of payments on the Department's DBE-IS *(Subcontractor Payment Information)* with each invoice. Invoices will not be processed for payment until the DBE-IS is received.

ARRA AND OERI CONTRACT PROVISIONS AND REPORTING REQUIREMENT CERTIFICATION:

(11-20-12) SP1 G70

By submission of a proposal or bid, the Contractor agrees to comply with the following provisions. Failure to comply with any or all of the provisions herein may be cause for the contracting agency to issue a cancellation notice to a Contractor.

The Contractor is hereby notified that this project will be financed with American Recovery and Reinvestment Act of 2009 (ARRA) Funds. The Contractor shall assure that all subcontractors and other contracts for services for ARRA funded projects shall have the mandated provisions of this directive in their contracts. Pursuant to Title XV, Section 1512 of the ARRA, the Department will require that the Contractor provide reports and other employment information as evidence to document the number of jobs created and retained by this contract from the Contractor's own workforce and any subcontractors. Additionally, the North Carolina Office of Economic Recovery & Investment (hereinafter, "OERI") has mandated certain procedural and reporting directives that will be followed. Additional provisions have been added to address OERI directives. No direct payment will be made for providing said reports as the cost for same is included in the various items in the contract.

The Contractor agrees that all data submitted to NCDOT and FRA in compliance with the Recovery Act requirements shall be accurate, objective, and of the highest integrity.

Posting with the Local Employment Security Commission

In addition to any other job postings the Contractor normally uses, OERI requires that the Contractor post with the local Employment Security Commission Office, all positions for which he intends to hire workers as a result of being awarded this contract. Labor and semi-skilled positions must be posted for at least 48 hours before the hiring decision. All other positions must be posted a minimum of five days before the hiring decision. The selected Contractor and any subcontractors shall report the new hires in the manner prescribed by the Employment Security Commission and the OERI. The NC ESC website can be found at www.ncesc.com.

Required Contract Provision to Implement ARRA Section 902

Section 902 of the American Recovery and Reinvestment Act (ARRA) of 2009 requires that each contract awarded using ARRA funds must include a provision that provides the U.S. Comptroller General and his representatives with the authority to:

(1) Examine any records of the Contractor or any of its subcontractors, or any State or local agency administering such contract, that directly pertain to, and involve transactions relating to, the contract or subcontract; and

(2) Interview any officer or employee of the Contractor or any of its subcontractors, or of any State or local government agency administering the contract, regarding such transactions.

Accordingly, the Comptroller General and his representatives will have the authority and rights as provided under Section 902 of the ARRA with respect to this contract, which is funded with recovery funds made available under the ARRA. Section 902 further states that nothing in this section shall be interpreted to limit or restrict in any way any existing authority of the Comptroller General.

Authority of the Inspector General

Section 1515(a) of the ARRA provides authority for any representatives of the Inspector General to examine any records or interview any employee or officers working on this contract. The Contractor is advised that representatives of the Inspector General have the authority to examine any record and interview any employee or officer of the Contractor, its subcontractors or other firms working on this contract. Section 1515(b) further provides that nothing in this section shall be interpreted to limit or restrict in any way any existing authority of the Inspector General.

Office of State Budget and Management Access to Records

OERI requires that the Contractor and subcontractor agree to allow the Office of State Budget and Management internal auditors and state agency internal auditors access to records and employees pertaining to the performance of any contract awarded by a public agency.

Buy America Provisions

49 U.S.C. Section 24405(a)(1) requires that iron, steel and manufactured goods used in public buildings or public works projects must be manufactured in the United States. The Contractor agrees to abide by this provision and shall maintain records of such purchases for inspection by authorized agents of the State of North Carolina and federal agencies. The contractor shall provide the Certificate of Compliance with Buy America to the Engineer. Copies of this certificate are available on the Piedmont Improvement Program website at http://www.piedmontrail.biz/primary-navigation/links-and-resources.

Wage Rate Provision (applies to all construction, alteration or repair projects)

Section 1606 of the ARRA requires that all laborers and mechanics employed by Contractors and subcontractors with funds from the ARRA shall be paid wages at rates not less than the prevailing wage rate under the Davis-Bacon Act. The Contractor agrees that by the submission

of a proposal/bid in response to a solicitation funded in whole or in part with recovery funds, continuous compliance will be maintained with the Davis-Bacon Act. This applies to all construction contracts that exceed $2,000.

Labor Provisions

As provided by 49 U.S.C. 24405(b), persons conducting rail operations over rail infrastructure constructed or improved in whole or in part with funds provided through the ARRA agreement shall be considered a "rail carrier," as defined by 49 U.S.C. 10102(5), for the purposes of Title 49, United States Code, and any other statute that adopts that definition or in which that definition applies, including the Railroad Retirement Act of 1974 (45 U.S.C. 231 et seq.), the Railway Labor Act (43 45 U.S. C. 151 et seq.), and the Railroad Unemployment Insurance Act (45 U.S.C. 351 et seq.).

Availability and Use of Funds

Contractors understand and acknowledge that any and all payment of funds, or the continuation thereof, is contingent upon funds provided solely by ARRA or required state matching funds. Pursuant to Section 1604 of ARRA, Contractors agree not to undertake or make progress toward any activity using recovery funds that will lead to the development of such activity as casinos or other gambling establishments, aquariums, zoos, golf courses, swimming pools or any other activity specifically prohibited by the Recovery Act. Also, funds are not to be used for travel beyond the service area. Further, Contractor understands that ARRA funding is considered "one-time" funding.

Outsourcing outside the USA without Specific Prior Approval Provision

Contractor agrees not to use any recovery funds from a contract or any other performance agreement awarded by the State of North Carolina, its agencies, or political subdivisions for outsourcing outside of the United States, without specific prior written approval from the agency issuing the contract.

Federal, State and Local Tax Obligations

By submission of a proposal, Contractors and subcontractors assert and self-certify that all Federal, State and local tax obligations have been or will be satisfied prior to receiving recovery funds.

Anti-Discrimination and Equal Opportunity

Pursuant to Section 1.7 of the guidance memorandum issued by the United States Office of Management and Budget on April 3, 2009, recovery funds must be distributed in accordance with all anti-discrimination and equal opportunity statutes, regulations, and Executive Orders pertaining to the expenditure of funds.

Reports of Fraud or Waste

Contractors must report to the Inspector General any suspected incidence of waste, fraud and abuse related to ARRA funds, and should notify FRA regional offices of any problems encountered as they occur. Notification can be made by phone at (919) 733-1433, or

electronically at http://www.ncrecovery.gov/reportFraud/reportFraud.aspx. Additional information can be found on the NC Recovery website (www.ncrecovery.gov) by clicking "Reporting of Waste and Fraud".

False Claims Act

Contractors and subcontractors awarded funds made available under the Recovery Act shall promptly report to the Inspector General any credible evidence that a principal, employee, agency, Contractor, subcontractor or other person has submitted a false claim under the False Claims Act or has committed a criminal or civil violation of laws pertaining to fraud, conflict of interest, bribery, gratuity, or similar misconduct involving Recovery Act funds.

Whistleblower Provisions

Contractors understand and acknowledge that Article 14 of Chapter 124, NCGS 126-84 through 126-88 (applies to the State and state employees), Article 21 of Chapter 95, NCGS 95-240 through 85-245 (applies to anyone, including state employees), and Section 1553 of the Recovery Act (applies to anyone receiving federal funds), provide protection to State, Federal and contract employees.

Contractors or Agencies cannot discharge, demote, or otherwise discriminate against an employee as a reprisal for disclosing, including a disclosure made in the ordinary course of an employee's duties, to the Recovery Accountability and Transparency Board, an Inspector General, the Comptroller General, a member of Congress, a State or Federal regulatory or law enforcement agency, a person with supervisory authority over the employee (or such other person working for the employer who has the authority to investigate, discover or terminate misconduct), a court or grand jury, the head of a Federal agency or their representative, information that the employee reasonably believes is evidence of:

(A) gross mismanagement of an agency contract or grant relating to covered funds;

(B) a gross waste of covered funds;

(C) a substantial and specific danger to public health or safety related to the implementation or use of covered funds;

(D) an abuse of authority related to the implementation or use of covered funds; or

(E) a violation of law, rule, or regulation related to an agency contract (including the competition for or negotiation of a contract) or grant, awarded or issued relating to covered funds.*

* covered funds: "any contract, grant, or other payment received by any non-federal employer if a) the Federal Government provides any portion of the money or property that is provided, requested or demanded; and b) at least some of the funds are appropriated or otherwise made available by this Act" 1553 (g)(2).

Contractor agrees to post notice of the rights and remedies as required by the ARRA.

Emblems

The Contractor agrees to use signs and materials at all fixed project locations at the most publicly accessible location announcing that the project or equipment was funded by the U.S. Department

of Transportation, Federal Railroad Administration, with funds provided through the American Recovery and Reinvestment Act as directed by NCDOT. This provision is to be included in any subagreements, leases, third party contracts, or other similar documents used in connection with its Recovery Act Project.

Contractor Responsibilities and Reporting Requirements under ARRA

Contractors are required to complete projects or activities which are funded under the ARRA and to report on use of the funds provided through this award as directed. Information from these reports will be made available to the public. The reporting responsibility should be passed down from the Contractor to the subcontractor in order to ensure that the necessary information is provided within the specified deadline.

Contractors are not responsible for reporting ARRA requirements directly to FRA. The Contractor shall report the required data by way of NCDOT-supplied forms (either Microsoft Excel forms and in the approved version of Excel or editable pdf forms, as provided by NCDOT). The responsibilities for reporting are as follows:

(A) General

(1) Obtaining a Data Universal Numbering System (D-U-N-S) number or the Contractor may use their name and zip code of their Headquarters. For more information, visit http://fedgov.dnb.com/webform (for US and International locations) or call 866-705-5711. The toll free number is for US locations only. Registrants will be asked for their entity name, address, city, state, country, postal code, highest ranking individual's name and title, line of business, # of employees and legal structure (i.e.: corporation, non-profit, etc.) and socio economic data (veteran owned, women owned, etc.). If they use the web-form, there is a mailing address area, SIC code and annual revenue data lines but these are optional.

(2) Expenditure amount (amount of payment).

(3) Expenditure description (what was exchanged for the payment).

(4) A brief description of the types of jobs created and jobs retained. "Jobs or positions created" means those new positions created and filled, or previously existing unfilled positions that are filled, as a result of Recovery Act funding. ''Jobs or positions retained'' means those previously existing filled positions that are retained as a result of Recovery Act funding. A job cannot be reported as both created and retained. Note that contractors will describe jobs created and retained, but will not need to determine which were created versus which were retained.

(5) An estimate of the number of jobs created and jobs retained. At a minimum, this estimate shall include any new positions created and any existing filled positions that were retained to support or carry out Recovery Act projects. The number shall be expressed as ''full-time equivalent'' (FTE), reported monthly as all hours worked divided by the total number of hours in a full-time schedule.

(6) Percent complete and DBE payment data shall be submitted on a monthly basis, and is due to the NCDOT-Rail Division within 5 days of the end of each month.

(B) ARRA Section 1512

Contractor shall complete Form FHWA-1589 for each month and submit it to the NCDOT-Rail Division within 7 days after the end of the month. This data will be required until the contract is complete.

(1) Contractors will need to report the number of direct on-site job hours associated with the ARRA funds awarded as of the end of the reporting period.

(a) Contractors will not be expected to estimate indirect employment data (such as the employment needed to make "off the shelf" parts that the Contractor purchases).

(b) The Contractor shall report direct labor (for example, construction workers building a maintenance facility, or transit agency workers doing preventive maintenance) for the prime as well as all subcontractors.

(c) The Contractor shall report direct labor for suppliers when the quantity or value of purchases passes a threshold where there is likely an identifiable employment impact for the vendor. NCDOT will provide detailed guidance and assistance in this calculation.

(d) USDOT economists will compute the number of indirect jobs and induced jobs (for example, jobs at suppliers or in unrelated industries as a result of the money flowing through the economy.)

(2) Contractors and consultants shall provide the required information for their own workforce as well as the workforce of all subcontractors that were active on their ARRA funded project(s) for the reporting month.

(3) The requirement for monthly reporting of employment data is included in all ARRA funded contracts to ensure transparency throughout the delivery of the project. As such, specific requirements have been developed for reporting this monthly data. All Contractors awarded projects shall attend a training session in Raleigh, North Carolina to discuss reporting requirements and procedures.

The Contractor hereby agrees to comply with the Contract Provisions and Reporting Requirements as indicated in the American Recovery and Reinvestment Act of 2009 and any amendments thereto. The Contractor also agrees to comply with any additional reporting requirements that may be requested by NCDOT, FRA, USDOT, the Inspector General (IG), the Government Accountability Office (GAO), or other entities, for example Congressional committees or individual members of Congress. The Contractor hereby agrees to inspections or audits that may occur at any time from the any of the above referenced federal or state agencies. Contractors are requested to provide a copy of any such reports to NCDOT on any responses to such requests for information or as a result of an inspection or audit.

CERTIFICATION FOR FEDERAL-AID CONTRACTS:

(3-21-90) SP1 G85

The prospective participant certifies, by signing and submitting this bid or proposal, to the best of his or her knowledge and belief, that:

(A) No Federal appropriated funds have been paid or will be paid, by or on behalf of the undersigned, to any person for influencing or attempting to influence an officer or employee of any Federal agency, a Member of Congress, an officer or employee of Congress, or an employee of a Member of Congress in connection with the awarding of any Federal contract, the making of any Federal grant, the making of any Federal loan, the entering into of any cooperative agreement, and the extension, continuation, renewal, amendment, or modification of any Federal contract, grant, loan, or cooperative agreement.

(B) If any funds other than Federal appropriated funds have been paid or will be paid to any person for influencing or attempting to influence an officer or employee of any Federal agency, a Member of Congress, an officer or employee of Congress, or an employee of a Member of Congress in connection with this Federal contract, grant, loan, or cooperative agreement, the undersigned shall complete and submit Standard Form-LLL, *Disclosure Form to Report Lobbying*, in accordance with its instructions.

This certification is a material representation of fact upon which reliance was placed when this transaction was made or entered into. Submission of this certification is a prerequisite for making or entering into this transaction imposed by *Section 1352, Title 31, U.S. Code*. Any person who fails to file the required certification shall be subject to a civil penalty of not less than $10,000 and not more than $100,000 for each such failure.

The prospective participant also agrees by submitting his or her bid or proposal that he or she shall require that the language of this certification be included in all lower tier subcontracts, which exceed $100,000 and that all such subrecipients shall certify and disclose accordingly.

CONTRACTOR'S LICENSE REQUIREMENTS:

(7-1-95) 102-14 SP1 G88

If the successful bidder does not hold the proper license to perform any plumbing, heating, air conditioning, or electrical work in this contract, he will be required to sublet such work to a contractor properly licensed in accordance with *Article 2 of Chapter 87 of the General Statutes* (licensing of heating, plumbing, and air conditioning contractors) and *Article 4 of Chapter 87* of the *General Statutes* (licensing of electrical contractors).

U.S. DEPARTMENT OF TRANSPORTATION HOTLINE:

(11-22-94) 108-5 SP1 G100

To report bid rigging activities call: **1-800-424-9071**

The U.S. Department of Transportation (DOT) operates the above toll-free hotline Monday through Friday, 8:00 a.m. to 5:00 p.m. eastern time. Anyone with knowledge of possible bid rigging, bidder collusion, or other fraudulent activities should use the hotline to report such activities.

The hotline is part of the DOT's continuing effort to identify and investigate highway construction contract fraud and abuse is operated under the direction of the DOT Inspector General. All information will be treated confidentially and caller anonymity will be respected.

SUBSURFACE INFORMATION:
(7-1-95) 450 SP1 G112 D

Subsurface information is available on the roadway and structure portions of this project.

LOCATING EXISTING UNDERGROUND UTILITIES:
(3-20-12) 105 SP1 G115

Revise the *2012 Standard Specifications* as follows:

Page 1-43, Article 105-8, line 28, after the first sentence, add the following:

Identify excavation locations by means of pre-marking with white paint, flags, or stakes or provide a specific written description of the location in the locate request.

MAINTENANCE OF THE PROJECT:
(11-20-07) (Rev. 1-17-12) 104-10 SP1 G125

Revise the *2012 Standard Specifications* as follows:

Page 1-35, Article 104-10 Maintenance of the Project, line 25, add the following after the first sentence of the first paragraph:

All guardrail/guiderail within the project limits shall be included in this maintenance.

Page 1-35, Article 104-10 Maintenance of the Project, line 30, add the following as the last sentence of the first paragraph:

The Contractor shall perform weekly inspections of guardrail and guiderail and shall report damages to the Engineer on the same day of the weekly inspection. *Where damaged guardrail or guiderail is repaired or replaced as a result of maintaining the project in* accordance with this article, such repair or replacement shall be performed within 7 consecutive calendar days of such inspection report.

Page 1-35, Article 104-10 Maintenance of the Project, lines 42-44, replace the last sentence of the last paragraph with the following:

The Contractor will not be directly compensated for any maintenance operations necessary, except for maintenance of guardrail/guiderail, as this work will be considered incidental to the work covered by the various contract items. The provisions of Article 104-7, Extra Work, and Article 104-8, Compensation and Record Keeping will apply to authorized maintenance of guardrail/guiderail. Performance of weekly inspections of guardrail/guiderail, and the damage reports required as described above, will be considered to be an incidental part of the work being paid for by the various contract items.

TWELVE MONTH GUARANTEE:
(7-15-03) 108 SP1 G145

(A) The Contractor shall guarantee materials and workmanship against latent and patent defects arising from faulty materials, faulty workmanship or negligence for a period of twelve months following the date of final acceptance of the work for maintenance and shall replace such defective materials and workmanship without cost to the Department. The Contractor will not be responsible for damage due to faulty design, normal wear and tear, for negligence on the part of the Department, and/or for use in excess of the design.

(B) Where items of equipment or material carry a manufacturer's guarantee for any period in excess of twelve months, then the manufacturer's guarantee shall apply for that particular piece of equipment or material. The Department's first remedy shall be through the manufacturer although the Contractor is responsible for invoking the warranted repair work with the manufacturer. The Contractor's responsibility shall be limited to the term of the manufacturer's guarantee. NCDOT would be afforded the same warranty as provided by the Manufacturer.

This guarantee provision shall be invoked only for major components of work in which the Contractor would be wholly responsible for under the terms of the contract. Examples would include pavement structures, bridge components, and sign structures. This provision will not be used as a mechanism to force the Contractor to return to the project to make repairs or perform additional work that the Department would normally compensate the Contractor for. In addition, routine maintenance activities (i.e. mowing grass, debris removal, ruts in earth shoulders,) are not parts of this guarantee.

Appropriate provisions of the payment and/or performance bonds shall cover this guarantee for the project.

To ensure uniform application statewide the Division Engineer will forward details regarding the circumstances surrounding any proposed guarantee repairs to the Chief Engineer for review and approval prior to the work being performed.

GIFTS FROM VENDORS AND CONTRACTORS:
(12-15-09) 107-1 SP1 G152

By Executive Order 24, issued by Governor Perdue, and *N.C.G.S.§ 133-32,* it is unlawful for any vendor or contractor (i.e. architect, bidder, contractor, construction manager, design professional, engineer, landlord, offeror, seller, subcontractor, supplier, or vendor), to make gifts or to give favors to any State employee of the Governor's Cabinet Agencies (i.e. Administration, Commerce, Correction, Crime Control and Public Safety, Cultural Resources, Environment and Natural Resources, Health and Human Services, Juvenile Justice and Delinquency Prevention, Revenue, Transportation, and the Office of the Governor). This prohibition covers those vendors and contractors who:

(A) Have a contract with a governmental agency; or
(B) Have performed under such a contract within the past year; or
(C) Anticipate bidding on such a contract in the future.

For additional information regarding the specific requirements and exemptions, vendors and contractors are encouraged to review Executive Order 24 and *N.C.G.S. § 133-32.*

Executive Order 24 also encouraged and invited other State Agencies to implement the requirements and prohibitions of the Executive Order to their agencies. Vendors and contractors should contact other State Agencies to determine if those agencies have adopted Executive Order 24.

EROSION AND SEDIMENT CONTROL/STORMWATER CERTIFICATION:

(1-16-07) (Rev 9-18-12) 105-16, 225-2, 16 SP1 G180

General

Schedule and conduct construction activities in a manner that will minimize soil erosion and the resulting sedimentation and turbidity of surface waters. Comply with the requirements herein regardless of whether or not a National Pollution discharge Elimination System (NPDES) permit for the work is required.

Establish a chain of responsibility for operations and subcontractors' operations to ensure that the *Erosion and Sediment Control/Stormwater Pollution Prevention Plan* is implemented and maintained over the life of the contract.

(A) *Certified Supervisor* - Provide a certified Erosion and Sediment Control/Stormwater Supervisor to manage the Contractor and subcontractor operations, insure compliance with Federal, State and Local ordinances and regulations, and manage the Quality Control Program.

(B) *Certified Foreman* - Provide a certified, trained foreman for each construction operation that increases the potential for soil erosion or the possible sedimentation and turbidity of surface waters.

(C) *Certified Installer* - Provide a certified installer to install or direct the installation for erosion or sediment/stormwater control practices.

(D) *Certified Designer* - Provide a certified designer for the design of the erosion and sediment control/stormwater component of reclamation plans and, if applicable, for the design of the project erosion and sediment control/stormwater plan.

Roles and Responsibilities

(A) *Certified Erosion and Sediment Control/Stormwater Supervisor* - The Certified Supervisor shall be Level II and responsible for ensuring the erosion and sediment control/stormwater plan is adequately implemented and maintained on the project and for conducting the quality control program. The Certified Supervisor shall be on the project within 24 hours notice from initial exposure of an erodible surface to the project's final acceptance. Perform the following duties:

(1) Manage Operations - Coordinate and schedule the work of subcontractors so that erosion and sediment control/stormwater measures are fully executed for each operation and in a timely manner over the duration of the contract.

(a) Oversee the work of subcontractors so that appropriate erosion and sediment control/stormwater preventive measures are conformed to at each stage of the work.

(b) Prepare the required National Pollutant Discharge Elimination System (NPDES) Inspection Record and submit to the Engineer.

(c) Attend all weekly or monthly construction meetings to discuss the findings of the NPDES inspection and other related issues.

(d) Implement the erosion and sediment control/stormwater site plans requested.

(e) Provide any needed erosion and sediment control/stormwater practices for the Contractor's temporary work not shown on the plans, such as, but not limited to work platforms, temporary construction, pumping operations, plant and storage yards, and cofferdams.

(f) Acquire applicable permits and comply with requirements for borrow pits, dewatering, and any temporary work conducted by the Contractor in jurisdictional areas.

(g) Conduct all erosion and sediment control/stormwater work in a timely and workmanlike manner.

(h) Fully perform and install erosion and sediment control/stormwater work prior to any suspension of the work.

(i) Coordinate with Department, Federal, State and Local Regulatory agencies on resolution of erosion and sediment control/stormwater issues due to the Contractor's operations.

(j) Ensure that proper cleanup occurs from vehicle tracking on paved surfaces or any location where sediment leaves the Right-of-Way.

(k) Have available a set of erosion and sediment control/stormwater plans that are initialed and include the installation date of Best Management Practices. These practices shall include temporary and permanent groundcover and be properly updated to reflect necessary plan and field changes for use and review by Department personnel as well as regulatory agencies.

(2) Requirements set forth under the NPDES Permit - The Department's NPDES Stormwater permit (NCS000250) outlines certain objectives and management measures pertaining to construction activities. The permit references *NCG010000, General Permit to Discharge Stormwater* under the NPDES, and states that the Department shall incorporate the applicable requirements into its delegated Erosion and Sediment Control Program for construction activities disturbing one or more acres of land. The Department further incorporates these requirements on all contracted bridge and culvert work at jurisdictional waters, regardless of size. Some of the requirements are, but are not limited to:

(a) Control project site waste to prevent contamination of surface or ground waters of the state, i.e. from equipment operation/maintenance, construction materials, concrete washout, chemicals, litter, fuels, lubricants, coolants, hydraulic fluids, any other petroleum products, and sanitary waste.

(b) Inspect erosion and sediment control/stormwater devices and stormwater discharge outfalls at least once every 7 calendar days, twice weekly for construction related *Federal Clean Water Act, Section 303(d)* impaired

streams with turbidity violations, and within 24 hours after a significant rainfall event of 0.5 inch that occurs within a 24 hour period.

(c) Maintain an onsite rain gauge or use the Department's Multi-Sensor Precipitation Estimate website to maintain a daily record of rainfall amounts and dates.

(d) Maintain erosion and sediment control/stormwater inspection records for review by Department and Regulatory personnel upon request.

(e) Implement approved reclamation plans on all borrow pits, waste sites and staging areas.

(f) Maintain a log of turbidity test results as outlined in the Department's Procedure for Monitoring Borrow Pit Discharge.

(g) Provide secondary containment for bulk storage of liquid materials.

(h) Provide training for employees concerning general erosion and sediment control/stormwater awareness, the Department's NPDES Stormwater Permit NCS000250 requirements, and the applicable requirements of the *General Permit, NCG010000.*

(i) Report violations of the NPDES permit to the Engineer immediately who will notify the Division of Water Quality Regional Office within 24 hours of becoming aware of the violation.

(3) Quality Control Program - Maintain a quality control program to control erosion, prevent sedimentation and follow provisions/conditions of permits. The quality control program shall:

(a) Follow permit requirements related to the Contractor and subcontractors' construction activities.

(b) Ensure that all operators and subcontractors on site have the proper erosion and sediment control/stormwater certification.

(c) Notify the Engineer when the required certified erosion and sediment control/stormwater personnel are not available on the job site when needed.

(d) Conduct the inspections required by the NPDES permit.

(e) Take corrective actions in the proper timeframe as required by the NPDES permit for problem areas identified during the NPDES inspections.

(f) Incorporate erosion control into the work in a timely manner and stabilize disturbed areas with mulch/seed or vegetative cover on a section-by-section basis.

(g) Use flocculants approved by state regulatory authorities where appropriate and where required for turbidity and sedimentation reduction.

(h) Ensure proper installation and maintenance of temporary erosion and sediment control devices.

(i) Remove temporary erosion or sediment control devices when they are no longer necessary as agreed upon by the Engineer.

(j) The Contractor's quality control and inspection procedures shall be subject to review by the Engineer. Maintain NPDES inspection records and make records available at all times for verification by the Engineer.

(B) *Certified Foreman* - At least one Certified Foreman shall be onsite for each type of work listed herein during the respective construction activities to control erosion, prevent sedimentation and follow permit provisions:

(1) Foreman in charge of grading activities
(2) Foreman in charge of bridge or culvert construction over jurisdictional areas
(3) Foreman in charge of utility activities

The Contractor may request to use the same person as the Level II Supervisor and Level II Foreman. This person shall be onsite whenever construction activities as described above are taking place. This request shall be approved by the Engineer prior to work beginning.

The Contractor may request to name a single Level II Foreman to oversee multiple construction activities on small bridge or culvert replacement projects. This request shall be approved by the Engineer prior to work beginning.

(C) *Certified Installers* - Provide at least one onsite, Level I Certified Installer for each of the following erosion and sediment control/stormwater crew:

(1) Seeding and Mulching
(2) Temporary Seeding
(3) Temporary Mulching
(4) Sodding
(5) Silt fence or other perimeter erosion/sediment control device installations
(6) Erosion control blanket installation
(7) Hydraulic tackifier installation
(8) Turbidity curtain installation
(9) Rock ditch check/sediment dam installation
(10) Ditch liner/matting installation
(11) Inlet protection
(12) Riprap placement
(13) Stormwater BMP installations (such as but not limited to level spreaders, retention/detention devices)
(14) Pipe installations within jurisdictional areas

If a Level I *Certified Installer* is not onsite, the Contractor may substitute a Level II Foreman for a Level I Installer, provided the Level II Foreman is not tasked to another crew requiring Level II Foreman oversight.

(D) *Certified Designer* - Include the certification number of the Level III-B Certified Designer on the erosion and sediment control/stormwater component of all reclamation plans and if applicable, the certification number of the Level III-A Certified Designer on the design of the project erosion and sediment control/stormwater plan.

Preconstruction Meeting

Furnish the names of the *Certified Erosion and Sediment Control/Stormwater Supervisor, Certified Foremen, Certified Installers* and *Certified Designer* and notify the Engineer of changes in certified personnel over the life of the contract within 2 days of change.

Ethical Responsibility

Any company performing work for the North Carolina Department of Transportation has the ethical responsibility to fully disclose any reprimand or dismissal of an employee resulting from improper testing or falsification of records.

Revocation or Suspension of Certification

Upon recommendation of the Chief Engineer to the certification entity, certification for *Supervisor, Certified Foremen, Certified Installers* and *Certified Designer* may be revoked or suspended with the issuance of an *Immediate Corrective Action (ICA), Notice of Violation (NOV),* or *Cease and Desist Order* for erosion and sediment control/stormwater related issues.

The Chief Engineer may recommend suspension or permanent revocation of certification due to the following:

(A) Failure to adequately perform the duties as defined within this certification provision.
(B) Issuance of an ICA, NOV, or Cease and Desist Order.
(C) Failure to fully perform environmental commitments as detailed within the permit conditions and specifications.
(D) Demonstration of erroneous documentation or reporting techniques.
(E) Cheating or copying another candidate's work on an examination.
(F) Intentional falsification of records.
(G) Directing a subordinate under direct or indirect supervision to perform any of the above actions.
(H) Dismissal from a company for any of the above reasons.
(I) Suspension or revocation of one's certification by another entity.

Suspension or revocation of a certification will be sent by certified mail to the certificant and the Corporate Head of the company that employs the certificant.

A certificant has the right to appeal any adverse action which results in suspension or permanent revocation of certification by responding, in writing, to the Chief Engineer within 10 calendar days after receiving notice of the proposed adverse action.

Chief Engineer
1536 Mail Service Center
Raleigh, NC 27699-1536

Failure to appeal within 10 calendar days will result in the proposed adverse action becoming effective on the date specified on the certified notice. Failure to appeal within the time specified will result in a waiver of all future appeal rights regarding the adverse action taken. The certificant will not be allowed to perform duties associated with the certification during the appeal process.

The Chief Engineer will hear the appeal and make a decision within 7 days of hearing the appeal. Decision of the Chief Engineer will be final and will be made in writing to the certificant.

If a certification is temporarily suspended, the certificant shall pass any applicable written examination and any proficiency examination, at the conclusion of the specified suspension period, prior to having the certification reinstated.

Measurement and Payment

Certified Erosion and Sediment Control/Stormwater Supervisor, Certified Foremen, Certified Installers and *Certified Designer* will be incidental to the project for which no direct compensation will be made.

PROCEDURE FOR MONITORING BORROW PIT DISCHARGE:

(2-20-07) (Rev. 3-20-13) 105-16, 230, 801 SP1 G181

Water discharge from borrow pit sites shall not cause surface waters to exceed 50 NTUs (nephelometric turbidity unit) in streams not designated as trout waters and 10 NTUs in streams, lakes or reservoirs designated as trout waters. For lakes and reservoirs not designated as trout waters, the turbidity shall not exceed 25 NTUs. If the turbidity exceeds these levels due to natural background conditions, the existing turbidity level shall not be increased.

If during any operating day, the downstream water quality exceeds the standard, the Contractor shall do all of the following:

(A) Either cease discharge or modify the discharge volume or turbidity levels to bring the downstream turbidity levels into compliance, or

(B) Evaluate the upstream conditions to determine if the exceedance of the standard is due to natural background conditions. If the background turbidity measurements exceed the standard, operation of the pit and discharge can continue as long as the stream turbidity levels are not increased due to the discharge.

(C) Measure and record the turbidity test results (time, date and sampler) at all defined sampling locations 30 minutes after startup and at a minimum, one additional sampling of all sampling locations during that 24-hour period in which the borrow pit is discharging.

(D) Notify DWQ within 24 hours of any stream turbidity standard exceedances that are not brought into compliance.

During the Environmental Assessment required by Article 230-4 of the *2012 Standard Specifications*, the Contractor shall define the point at which the discharge enters into the State's surface waters and the appropriate sampling locations. Sampling locations shall include points upstream and downstream from the point at which the discharge enters these waters. Upstream sampling location shall be located so that it is not influenced by backwater conditions and represents natural background conditions. Downstream sampling location shall be located at the point where complete mixing of the discharge and receiving water has occurred.

The discharge shall be closely monitored when water from the dewatering activities is introduced into jurisdictional wetlands. Any time visible sedimentation (deposition of sediment) on the wetland surface is observed, the dewatering activity will be suspended until turbidity levels in the stilling basin can be reduced to a level where sediment deposition does not occur. Staining of

wetland surfaces from suspended clay particles, occurring after evaporation or infiltration, does not constitute sedimentation. No activities shall occur in wetlands that adversely affect the functioning of a wetland. Visible sedimentation will be considered an indication of possible adverse impacts on wetland use.

The Engineer will perform independent turbidity tests on a random basis. These results will be maintained in a log within the project records. Records will include, at a minimum, turbidity test results, time, date and name of sampler. Should the Department's test results exceed those of the Contractor's test results, an immediate test shall be performed jointly with the results superseding the previous test results of both the Department and the Contractor.

The Contractor shall use the *NCDOT Turbidity Reduction Options for Borrow Pits Matrix,* available at http://www.ncdot.gov/doh/operations/dp_chief_eng/roadside/fieldops/downloads/Files/TurbidityReductionOptionSheet.pdf to plan, design, construct, and maintain BMPs to address water quality standards. Tier I Methods include stilling basins which are standard compensatory BMPs. Other Tier I methods are noncompensatory and shall be used when needed to meet the stream turbidity standards. Tier II Methods are also noncompensatory and are options that may be needed for protection of rare or unique resources or where special environmental conditions exist at the site which have led to additional requirements being placed in the DWQ's 401 Certifications and approval letters, Isolated Wetland Permits, Riparian Buffer Authorization or a DOT Reclamation Plan's Environmental Assessment for the specific site. Should the Contractor exhaust all Tier I Methods on a site exclusive of rare or unique resources or special environmental conditions, Tier II Methods may be required by regulators on a case by case basis per supplemental agreement.

The Contractor may use cation exchange capacity (CEC) values from proposed site borings to plan and develop the bid for the project. CEC values exceeding 15 milliequivalents per 100 grams of soil may indicate a high potential for turbidity and should be avoided when dewatering into surface water is proposed.

No additional compensation for monitoring borrow pit discharge will be paid.

EMPLOYMENT:

(11-15-11) (Rev. 1-17-12) 108, 102 SP1 G184

Revise the *2012 Standard Specifications* as follows:

Page 1-20, Subarticle 102-15(O), delete and replace with the following:

(O) Failure to restrict a former Department employee as prohibited by Article 108-5.

Page 1-65, Article 108-5 Character of Workmen, Methods, and Equipment, line 32, delete all of line 32, the first sentence of the second paragraph and the first word of the second sentence of the second paragraph.

STATE HIGHWAY ADMINISTRATOR TITLE CHANGE:

(9-18-12) SP1 G185

Revise the *2012 Standard Specifications* as follows:

Replace all references to "State Highway Administrator" with "Chief Engineer".

PROGRESS SCHEDULE (RAIL):
(2-19-13) SP1 G25

The Contractor shall prepare and submit for review and approval a Progress Schedule as set forth in Section 108 of the *Standard Specification* and as amended herein.

The schedule shall include activity descriptions with beginning and ending dates, partial completion (in percentage or time format). The schedule shall include activities or milestones indicating when NSR flagmen and construction forces should be mobilized to the site.

In addition to those requirements listed above and in Section 108 of the *Standard Specifications*, the Contractor shall include the following activities or milestones in the schedules, where applicable:

(A) Dates when flagging for railroad protection is required and expected type of flagging required, as coordinated with the Engineer and Railroad Engineer.
(B) Dates (and durations, if temporary) for closures of at-grade crossings.
(C) Completion dates for highway projects and railroad roadbed projects if separate completion dates are anticipated/required.
(D) Anticipated dates for removal of erosion control devices.

The Contractor shall continue to submit to the Engineer a schedule on a monthly basis until the work is substantially complete. If no changes are required to the schedule dates, the Contractor shall resubmit the previous month's schedule with a revised submittal date and updated percent partial completion.

PROJECT SPECIAL PROVISIONS

ROADWAY

CLEARING AND GRUBBING - METHOD III:

(4-6-06) (Rev. 1-17-12) 200 SP2 R02B

Perform clearing on this project to the limits established by Method "III" shown on Standard Drawing No. 200.03 of the *2012 Roadway Standard Drawings*.

SEALING ABANDONDED WELLS:

The Contractor shall seal the well located 135' left of station 25+50-YB- and any other wells on the project as directed by the Engineer. All work shall be in accordance with Section 205 of the *Standard Specifications.* Measurements and payment will be in accordance with Section 205 the *Standard Specifications.*

BUILDING REMOVAL:

(1-1-02) (Rev. 1-17-12) 215 SP2 R15 C

Remove the buildings, underground storage tanks and appurtenances listed below in accordance with Section 215 of the *2012 Standard Specifications*:

Building Removal
Parcel 018A – Right of Survey Station 14+50 - 15+25, Line -YB-
Wood Framed Shed (Approximately 500-600 sf)

Building Removal
Parcel 019A – Right of Survey Station 15+35 - 16+65, Line -YB-
Wooden Framed Shed (Approximately 800 +/- sf), Partially Outside Right of Way and/or Construction Limits.

Building Removal
Parcel 022A – Left of Survey Station 16+20 - 16+65, Line -YB-
Metal Canopy (Approximately 20'x20'), Partially in Existing Right of Way and Partially Outside of Right of Way and/or Construction Limits (*See endnote)

Building Removal
Parcel 025A – Left of Survey Station 21+05 - 23+00, Line -YB-
One-Story Framed Building (2,390 sf), One-Story Framed Auxiliary Building/ Shooting Range (425 sf).

Building Removal
Parcel 026A – Left of Survey Station 23+04 - 25+60, Line -YB-
1978 Mobile Home (905 sf), 1992 Mobile Home (948 sf) and One Story Attached Wood Framed Addition (178 sf) with Brick Underpinning/Skirting, Metal Canopy (341 sf), One-Story Framed Shed (539 sf).

When the description of the work for an item indicates a building partially inside and partially outside the right of way and/or construction area, but does not require the building to be cut off, the entire building shall be removed.

SHOULDER AND FILL SLOPE MATERIAL:

(5-21-02) 235, 560 SP2 R45 B

Description

Perform the required shoulder and slope construction for this project in accordance with the applicable requirements of Section 560 and Section 235 of the *2012 Standard Specifications*.

Measurement and Payment

When the Contractor elects to obtain material from an area located beneath a proposed fill sections which does not require excavation for any reason other than to generate acceptable shoulder and fill slope material, the work of performing the excavation will be considered incidental to the item of *Borrow Excavation* or *Shoulder Borrow*. If there is no pay item for *Borrow* or *Shoulder Borrow* in the contract, this work will be considered incidental to *Unclassified Excavation*. Stockpile the excavated material in a manner to facilitate measurement by the Engineer. Fill the void created by the excavation of the shoulder and fill slope material with suitable material. Payment for material used from the stockpile will be made at the contract unit price for *Borrow Excavation* or *Shoulder Borrow*. If there is no pay item for *Borrow Excavation* or *Shoulder Borrow*, then the material will be paid for at the contract unit price for *Unclassified Excavation*. The material used to fill the void created by the excavation of the shoulder and fill slope material will be made at the contract unit price for *Unclassified Excavation*, *Borrow Excavation*, or *Shoulder Borrow*, depending on the source of the material.

Material generated from undercut excavation, unclassified excavation or clearing and grubbing operations that is placed directly on shoulders or slope areas, will not be measured separately for payment, as payment for the work requiring the excavation will be considered adequate compensation for depositing and grading the material on the shoulders or slopes.

When undercut excavation is performed at the direction of the Engineer and the material excavated is found to be suitable for use as shoulder and fill slope material, and there is no area on the project currently prepared to receive the material generated by the undercut operation, the Contractor may construct a stockpile for use as borrow at a later date. Payment for the material used from the stockpile will be made at the contract unit price for *Borrow Excavation* or *Shoulder Borrow*.

When shoulder material is obtained from borrow sources or from stockpiled material, payment for the work of shoulder construction will be made at the contract unit price per cubic yard for *Borrow Excavation* or *Shoulder Borrow* in accordance with the applicable provisions of Section 230 or Section 560 of the *2012 Standard Specifications*.

SURCHARGES AND WAITING PERIODS:

(2-17-04) (Rev. 2-19-13) 235 SP2 R65

Revise the *2012 Standard Specifications* as follows:

Page 2-22, Article 235-1 DESCRIPTION, add the following:

Surcharges and waiting periods may be required for embankments and retaining walls to minimize and control the effects of settlement on structures, approach slabs, pavements, pipes, utilities, etc.

Page 2-24, Article 235-3 CONSTRUCTION METHODS, add the following:

(E) Surcharges and Waiting Periods

Place surcharges at locations shown in the plans. Unless required otherwise in the contract, surcharge embankments after embankments are constructed to the grade and cross section shown in the plans. Construct surcharges with side slopes as directed, 2:1 (H:V) end slopes outside of surcharge limits and surcharge heights shown in the plans. Place and compact surcharge material in accordance with Subarticles 235-3(B) and 235-3(C). Construct and maintain adequate drainage of surface runoff to prevent erosion of surcharge material.

Waiting period durations are in accordance with the contract and as directed. Surcharge waiting periods apply to surcharge locations shown in the plans and begin after surcharges are constructed to the height shown in the plans.

Unless required otherwise in the contract, bridge waiting periods are required in accordance with the following:

(1) Apply to bridge embankments and retaining walls within 100 ft of end bent and bent locations shown in the plans and

(2) Begin after bridge embankments and retaining walls are constructed to the elevations noted in the plans.

Unless required otherwise in the contract, embankment waiting periods are required in accordance with the following:

(1) Apply to embankment locations shown in the plans and retaining walls for embankments with waiting periods and

(2) Begin after embankments and retaining walls are constructed to the elevations, grade and cross section shown in the plans.

Except for maintaining embankments, do not perform any work on embankments or structures with waiting periods until waiting periods end unless otherwise approved. Place and compact additional material in accordance with Subarticles 235-3(B) and 235-3(C) to maintain embankment grade elevations during waiting periods. Remove surcharges to the grade and cross section shown in the plans after surcharge waiting periods end.

Page 2-24, Article 235-5 MEASUREMENT AND PAYMENT, add the following:

Borrow Excavation for surcharge material and additional material for maintaining embankment grade elevations will be measured and paid in accordance with Article 230-5. *Unclassified*

Excavation for surcharge material, additional material for maintaining embankment grade elevations and removing surcharges will be measured and paid in accordance with Article 225-7. When there is no pay item for *Borrow Excavation* or *Unclassified Excavation* in the contract, surcharge and additional material and removing surcharges will be paid as extra work in accordance with Article 104-7.

PIPE INSTALLATION:
(11-20-12) 300 SP3 R01

Revise the *2012 Standard Specifications* as follows:

Page 3-1, Article 300-2, Materials, line 23-24, replace sentence with:

Provide foundation conditioning geotextile in accordance with Section 1056 for Type 4 geotextile.

BRIDGE APPROACH FILLS:
(10-19-10) (Rev. 1-17-12) 422 SP4 R02

Description

Bridge approach fills include bridge approach fills for sub regional tier bridges and reinforced bridge approach fills. Construct bridge approach fills in accordance with the contract and Standard Drawing No. 422.10 or 422.11 of the *2012 Roadway Standard Drawings*. Define "geosynthetics" as geotextiles or geomembranes.

Materials

Refer to Division 10 of the *2012 Standard Specifications*.

Item	Section
Anchor Pins	1056-2
Geotextiles	1056
Portland Cement Concrete	1000
Select Material	1016
Subsurface Drainage Materials	1044
Wire Staples	1060-8(D)

For bridge approach fills for sub regional tier bridges, provide Type 1 geotextile for filtration geotextiles. For reinforced bridge approach fills, provide Type 5 geotextile for geotextile reinforcement and Type 1 geotextile and No. 78M stone for drains. Use Class B concrete for concrete pads.

Use Class III or V select material for reinforced bridge approach fills and only Class V select material (standard size No. 78M stone) for bridge approach fills for sub regional tier bridges. Provide PVC pipes, fittings and outlet pipes for subsurface drainage materials. For drains and PVC pipes behind end bents, use pipes with perforations that meet AASHTO M 278.

Use PVC, HDPE or linear low density polyethylene (LLDPE) geomembranes for reinforced bridge approach fills. For PVC geomembranes, provide grade PVC30 geomembranes that meet

ASTM D7176. For HDPE and LLDPE geomembranes, use geomembranes with a nominal thickness of at least 30 mils that meet Geosynthetic Research Institute Standard Specifications GM13 or GM17, respectively. Handle and store geomembranes in accordance with Article 1056-2 of the *2012 Standard Specifications*. Provide material certifications for geomembranes in accordance with Article 1056-3 of the *2012 Standard Specifications*.

Construction Methods

Excavate as necessary for bridge approach fills in accordance with the contract. Notify the Engineer when foundation excavation is complete. Do not place geomembranes or filtration geotextiles until excavation dimensions and foundation material are approved. Attach geomembranes and filtration geotextiles to end bent cap back and wing walls with adhesives, tapes or other approved methods. Glue or weld geomembrane seams to prevent leakage.

For reinforced bridge approach fills, place geotextile reinforcement within 3" of locations shown in Standard Drawing No. 422.10 of the *2012 Roadway Standard Drawings* and in slight tension free of kinks, folds, wrinkles or creases. Install geotextile reinforcement with the orientation, dimensions and number of layers shown in Standard Drawing No. 422.10 of the *2012 Roadway Standard Drawings*. Place first layer of geotextile reinforcement directly on geomembranes with no void or material in between. Install geotextile reinforcement with the machine direction (MD) parallel to the roadway centerline. The MD is the direction of the length or long dimension of the geotextile roll. Do not splice or overlap geotextile reinforcement in the MD so seams are perpendicular to the roadway centerline. Wrap geotextile reinforcement at end bent cap back and wing walls as shown in Standard Drawing No. 422.10 of the *2012 Roadway Standard Drawings* and directed by the Engineer. Extend geotextile reinforcement at least 4 ft back behind end bent cap back and wing walls into select material.

Overlap adjacent geotextiles at least 18" with seams oriented parallel to the roadway centerline. Hold geotextiles in place with wire staples or anchor pins as needed. Contact the Engineer when existing or future obstructions such as foundations, pavements, pipes, inlets or utilities will interfere with geosynthetics.

For reinforced bridge approach fills, construct one foot square drains consisting of 4" diameter continuous perforated PVC pipes surrounded by No. 78M stone wrapped in Type 1 geotextiles. Install drains in accordance with Standard Drawing No. 422.10 of the *2012 Roadway Standard Drawings*. For bridge approach fills for sub regional tier bridges, install 4" diameter continuous perforated PVC drain pipes in accordance with Standard Drawing No. 422.11 of the *2012 Roadway Standard Drawings*.

Use solvent cement to connect PVC pipes so joints do not leak. Connect perforated pipes to outlet pipes just behind wing walls. Provide drain pipes and drains with positive drainage towards outlets. Place pipe sleeves in or under wing walls for outlet pipes so positive drainage is maintained. Use sleeves that can withstand wing wall loads.

Place select material in 8" to 10" thick lifts. Use only hand operated compaction equipment to compact select material for bridge approach fills. Compact Class III select material in accordance with Subarticle 235-3(C) of the *2012 Standard Specifications*. Compact No. 78M

stone with a vibratory compactor to the satisfaction of the Engineer. Do not displace or damage geosynthetics, drain pipes or drains when placing and compacting select material. End dumping directly on geosynthetics is not permitted. Do not operate heavy equipment on geosynthetics, drain pipes or drains until they are covered with at least 8" of select material. Replace any damaged geosynthetics, drain pipes or drains to the satisfaction of the Engineer.

Cover open ends of outlet pipes with rodent screens as shown in Standard Drawing No. 815.03 of the *2012 Roadway Standard Drawings*. Connect ends of outlet pipes to concrete pads or existing drainage structures as directed by the Engineer. Construct concrete pads with an Ordinary surface finish that meets Subarticle 825-6(B) of the *2012 Standard Specifications*.

Measurement and Payment

Reinforced Bridge Approach Fill, Station ____ will be paid at the contract lump sum price. The contract lump sum price for *Reinforced Bridge Approach Fill, Station* ____ will be full compensation for labor, tools, equipment and reinforced bridge approach fill materials, excavating, backfilling, hauling and removing excavated materials, compacting select material, connecting outlet pipes to existing drainage structures and supplying select materials, geosynthetics, drains, pipe sleeves and outlet components and any incidentals necessary to construct all reinforced bridge approach fills at each bridge.

Bridge Approach Fill - Sub Regional Tier, Station ____ will be paid at the contract lump sum price. The contract lump sum price for *Bridge Approach Fill - Sub Regional Tier, Station* ____ will be full compensation for labor, tools, equipment and bridge approach fill materials, excavating, backfilling, hauling and removing excavated materials, compacting No. 78M stone, connecting outlet pipes to existing drainage structures and supplying No. 78M stone, filtration geotextiles, drain pipes, pipe sleeves and outlet components and any incidentals necessary to construct all bridge approach fills at each sub regional tier bridge.

Payment will be made under:

Pay Item	Pay Unit
Reinforced Bridge Approach Fill, Station ____	Lump Sum
Bridge Approach Fill - Sub Regional Tier, Station ____	Lump Sum

ASPHALT PAVEMENTS - SUPERPAVE:

(6-19-12) 605 SP6 R01

Revise the *2012 Standard Specifications* as follows:

Page 6-3, Article 605-7 APPLICATION RATES AND TEMPERATURES, replace this article, including Table 601-1, with the following:

Apply tack coat uniformly across the existing surface at target application rates shown in Table 605-1.

TABLE 605-1 APPLICATION RATES FOR TACK COAT	
Existing Surface	**Target Rate (gal/sy)**
	Emulsified Asphalt
New Asphalt	0.04 ± 0.01
Oxidized or Milled Asphalt	0.06 ± 0.01
Concrete	0.08 ± 0.01

Apply tack coat at a temperature within the ranges shown in Table 605-2. Tack coat shall not be overheated during storage, transport or at application.

TABLE 605-2 APPLICATION TEMPERATURE FOR TACK COAT	
Asphalt Material	**Temperature Range**
Asphalt Binder, Grade PG 64-22	350 - 400°F
Emulsified Asphalt, Grade RS-1H	130 - 160°F
Emulsified Asphalt, Grade CRS-1	130 - 160°F
Emulsified Asphalt, Grade CRS-1H	130 - 160°F
Emulsified Asphalt, Grade HFMS-1	130 - 160°F
Emulsified Asphalt, Grade CRS-2	130 - 160°F

Page 6-18, Article 610-1 DESCRIPTION, lines 40-41, delete the last sentence of the last paragraph.

Page 6-19, Subarticle 610-3(A) Mix Design-General, line 5, add the following as the first paragraph:

Warm mix asphalt (WMA) is allowed for use at the Contractor's option in accordance with the NCDOT Approved Products List for WMA Technologies available at: **http://www.ncdot.org/doh/operations/materials/pdf/wma.pdf**.

ASPHALT BINDER CONTENT OF ASPHALT PLANT MIXES:
(11-21-00) (Rev. 7-17-12) 609 SP6 R15

The approximate asphalt binder content of the asphalt concrete plant mixtures used on this project will be as follows:

Asphalt Concrete Base Course	Type B 25.0__	4.4%
Asphalt Concrete Intermediate Course	Type I 19.0__	4.8%
Asphalt Concrete Surface Course	Type S 4.75A	6.8%
Asphalt Concrete Surface Course	Type SA-1	6.8%
Asphalt Concrete Surface Course	Type SF 9.5A	6.7%
Asphalt Concrete Surface Course	Type S 9.5__	6.0%
Asphalt Concrete Surface Course	Type S 12.5__	5.6%

The actual asphalt binder content will be established during construction by the Engineer within the limits established in the *2012 Standard Specifications.*

ASPHALT PLANT MIXTURES:
(7-1-95) 609 SP6 R20

Place asphalt concrete base course material in trench sections with asphalt pavement spreaders made for the purpose or with other equipment approved by the Engineer.

PRICE ADJUSTMENT - ASPHALT BINDER FOR PLANT MIX:
(11-21-00) 620 SP6 R25

Price adjustments for asphalt binder for plant mix will be made in accordance with Section 620 of the *2012 Standard Specifications.*

The base price index for asphalt binder for plant mix is **$ 546.56** per ton.

This base price index represents an average of F.O.B. selling prices of asphalt binder at supplier's terminals on **February 1, 2013**.

FINAL SURFACE TESTING NOT REQUIRED:
(5-18-04) (Rev. 5-15-12) 610 SP6 R45

Final surface testing is not required on this project.

GUARDRAIL ANCHOR UNITS, TYPE 350:
(4-20-04) (Rev. 8-16-11) 862 SP8 R65

Description

Furnish and install guardrail anchor units in accordance with the details in the plans, the applicable requirements of Section 862 of the *2012 Standard Specifications*, and at locations shown in the plans.

Materials

The Contractor may at his option, furnish any one of the guardrail anchor units or approved equal.

Guardrail anchor unit (ET-Plus) as manufactured by:

Trinity Industries, Inc.
2525 N. Stemmons Freeway
Dallas, Texas 75207
Telephone: 800-644-7976

The guardrail anchor unit (SKT 350) as manufactured by:

Road Systems, Inc.
3616 Old Howard County Airport
Big Spring, Texas 79720
Telephone: 915-263-2435

Prior to installation the Contractor shall submit to the Engineer:

(A) FHWA acceptance letter for each guardrail anchor unit certifying it meets the requirements of NCHRP Report 350, Test Level 3, in accordance with Article 106-2 of the *2012 Standard Specifications*.

(B) Certified working drawings and assembling instructions from the manufacturer for each guardrail anchor unit in accordance with Article 105-2 of the *2012 Standard Specifications*.

No modifications shall be made to the guardrail anchor unit without the express written permission from the manufacturer. Perform installation in accordance with the details in the plans, and details and assembling instructions furnished by the manufacturer.

Construction Methods

Guardrail end delineation is required on all approach and trailing end sections for both temporary and permanent installations. Guardrail end delineation consists of yellow reflective sheeting applied to the entire end section of the guardrail in accordance with Article 1088-3 of the *2012 Standard Specifications* and is incidental to the cost of the guardrail anchor unit.

Measurement and Payment

Measurement and payment will be made in accordance with Article 862-6 of the *2012 Standard Specifications*.

Payment will be made under:

Pay Item	Pay Unit
Guardrail Anchor Units, Type 350	Each

DETECTABLE WARNINGS FOR PROPOSED CURB RAMPS:

(6-15-10) (Rev. 8-16-11) 848 SP8 R126

Description

Construct detectable warnings consisting of integrated raised truncated domes on proposed concrete curb ramps in accordance with the *2012 Standard Specifications,* plan details, the requirements of the *28 CFR Part 36 ADA Standards for Accessible Design* and this provision.

Materials

Detectable warning for proposed curb ramps shall consist of integrated raised truncated domes. The description, size and spacing shall conform to Section 848 of the *2012 Standard Specifications.*

Use material for detectable warning systems as shown herein. Material and coating specifications must be stated in the Manufacturers Type 3 Certification and all Detectable Warning systems must be on the NCDOT Approved Products List.

Install detectable warnings created from one of the following materials: precast concrete blocks or bricks, clay paving brick, gray or ductile iron castings, mild steel, stainless steel, and

engineered plastics, rubber or composite tile. Only one material type for detectable warning will be permitted per project, unless otherwise approved by the Engineer.

(A) Detectable Warnings shall consist of a base with integrated raised truncated domes, and when constructed of precast concrete they shall conform to the material requirements of Article 848-2 of the *2012 Standard Specifications.*

(B) Detectable Warnings shall consist of a base with integrated raised truncated domes, and may be comprised of other materials including, but not limited, to clay paving brick, gray iron or ductile iron castings, mild steel, stainless steel, and engineered plastics, rubber or composite tile, which are cast into the concrete of the curb ramps. The material shall have an integral color throughout the thickness of the material. The detectable warning shall include fasteners or anchors for attachment in the concrete and shall be furnished as a system from the manufacturer.

Prior to installation, the Contractor shall submit to the Engineer assembling instructions from the manufacturer for each type of system used in accordance with Article 105-2 of the *2012 Standard Specifications*. The system shall be furnished as a kit containing all consumable materials and consumable tools, required for the application. They shall be capable of being affixed to or anchored in the concrete curb ramp, including green concrete (concrete that has set but not appreciably hardened). The system shall be solvent free and contain no volatile organic compounds (VOC). The static coefficient of friction shall be 0.8 or greater when measured on top of the truncated domes and when measured between the domes in accordance with ASTM C1028 (dry and wet). The system shall be resistant to deterioration due to exposure to sunlight, water, salt or adverse weather conditions and impervious to degradation by motor fuels, lubricants and antifreeze.

(C) When steel or gray iron or ductile iron casting products are provided, only products that meet the requirements of Subarticle 106-1(B) of the *2012 Standard Specifications* may be used. Submit to the Engineer a Type 6 Certification, catalog cuts and installation procedures at least 30 days prior to installation for all.

Construction Methods

(A) Prior to placing detectable warnings in proposed concrete curb ramps, adjust the existing subgrade to the proper grade and in accordance with Article 848-3 of the *2012 Standard Specifications*.

(B) Install all detectable warning in proposed concrete curb ramps in accordance with the manufacturer's recommendations.

Measurement and Payment

Detectable Warnings installed for construction of proposed curb ramps will not be paid for separately. Such payment will be included in the price bid for *Concrete Curb Ramps*.

MATERIALS:
(2-21-12) (Rev. 3-19-13) 1000, 1005, 1078, 1080, 1081, 1087, 1092 SP10 R01

Revise the *2012 Standard Specifications* as follows:

Page 10-1, Article 1000-1, DESCRIPTION, line 14, add the following:

Use materials which do not produce a mottled appearance through rusting or other staining of the finished concrete surface.

Page 10-5, Table 1000-1, REQUIREMENTS FOR CONCRETE, replace with the following:

TABLE 1000-1
REQUIREMENTS FOR CONCRETE

Class of Concrete	Min. Comp. Strength at 28 days	Maximum Water-Cement Ratio				Consistency Max. Slump		Cement Content			
		Air-Entrained Concrete		Non Air-Entrained Concrete		Vibrated	Non-Vibrated	Vibrated		Non- Vibrated	
		Rounded Aggregate	Angular Aggregate	Rounded Aggregate	Angular Aggregate			Min.	Max.	Min.	Max.
Units	*psi*					*inch*	*inch*	*lb/cy*	*lb/cy*	*lb/cy*	*lb/cy*
AA	4,500	0.381	0.426	-	-	3.5	-	639	715	-	-
AA Slip Form	4,500	0.381	0.426	-	-	1.5	-	639	715	-	-
Drilled Pier	4,500	-	-	0.450	0.450	-	5-7 dry 7-9 wet	-	-	640	800
A	3,000	0.488	0.532	0.550	0.594	3.5	4	564	-	602	-
B	2,500	0.488	0.567	0.559	0.630	2.5	4	508	-	545	-
B Slip Formed	2,500	0.488	0.567	-	-	1.5	-	508	-	-	-
Sand Light-weight	4,500	-	0.420	-	-	4	-	715	-	-	-
Latex Modified	3,000 7 day	0.400	0.400	-	-	6	-	658	-	-	-
Flowable Fill excavatable	150 max. at 56 days	as needed	as needed	as needed	as needed	-	Flow-able	-	-	40	100
Flowable Fill non-excavatable	125	as needed	as needed	as needed	as needed	-	Flow-able	-	-	100	as needed
Pavement	4,500 design, field 650 flexural, design only	0.559	0.559	-	-	1.5 slip form 3.0 hand place	-	526	-	-	-
Precast	See Table 1077-1	as needed	as needed	-	-	6	as needed	as needed	as needed	as needed	as needed
Prestress	per contract	See Table 1078-1	See Table 1078-1	-	-	8	-	564	as needed	-	-

Page 10-23, Table 1005-1, AGGREGATE GRADATION-COARSE AGGREGATE, replace with the following:

TABLE 1005-1
AGGREGATE GRADATION - COARSE AGGREGATE
Percentage of Total by Weight Passing

Std. Size #	2"	1 1/2"	1"	3/4"	1/2"	3/8"	#4	#8	#10	#16	#40	#200	Remarks
4	100	90-100	20-55	0-15	-	0-5	-	-	-	-	-	A	Asphalt Plant Mix
467M	100	95-100	-	35-70	-	0-30	0-5	-	-	-	-	A	Asphalt Plant Mix
5	-	100	90-100	20-55	0-10	0-5	-	-	-	-	-	A	AST, Sediment Control Stone
57	-	100	95-100	-	25-60	-	0-10	0-5	-	-	-	A	AST, Str. Concrete, Shoulder Drain, Sediment Control Stone
57M	-	100	95-100	-	25-45	-	0-10	0-5	-	-	-	A	AST, Concrete Pavement
6M	-	-	100	90-100	20-55	0-20	0-8	-	-	-	-	A	AST
67	-	-	100	90-100	-	20-55	0-10	0-5	-	-	-	A	AST, Str. Concrete, Asphalt Plant Mix
78M	-	-	-	100	98-100	75-100	20-45	0-15	-	-	-	A	Asphalt Plant Mix, AST, Str. Conc, Weep Hole Drains
14M	-	-	-	-	-	100	35-70	5-20	-	0-8	-	A	Asphalt Plant Mix, AST, Weep Hole Drains, Str. Concrete
9	-	-	-	-	-	100	85-100	10-40	-	0-10	-	A	AST
ABC	-	100	75-97	-	55-80	-	35-55	-	25-45	-	14-30	4-12[B]	Aggregate Base Course, Aggregate Stabilization
ABC (M)	-	100	75-100	-	45-79	-	20-40	-	0-25	-	-	0-12[B]	Maintenance Stabilization
Light-weight[C]	-	-	-	-	100	80-100	5-40	0-20	-	0-10	-	0-2.5	AST

A. See Subarticle 1005-4(A).
B. See Subarticle 1005-4(B).
C. For Lightweight Aggregate used in Structural Concrete, see Subarticle 1014-2(E)(6).

Page 10-126, Table 1078-1, REQUIREMENTS FOR CONCRETE, replace with the following:

TABLE 1078-1
REQUIREMENTS FOR CONCRETE

Property	28 Day Design Compressive Strength 6,000 psi or less	28 Day Design Compressive Strength greater than 6,000 psi
Maximum Water/Cementitious Material Ratio	0.45	0.40
Maximum Slump without HRWR	3.5"	3.5"
Maximum Slump with HRWR	8"	8"
Air Content (upon discharge into forms)	5 + 2%	5 + 2%

Page 10-151, Article 1080-4 Inspection and Sampling, lines 18-22, replace (B), (C) and (D) with the following:

(B) At least 3 panels prepared as specified in 5.5.10 of AASHTO M 300, Bullet Hole Immersion Test.

(C) At least 3 panels of 4"x6"x1/4" for the Elcometer Adhesion Pull Off Test, ASTM D4541.

(D) A certified test report from an approved independent testing laboratory for the Salt Fog Resistance Test, Cyclic Weathering Resistance Test, and Bullet Hole Immersion Test as specified in AASHTO M 300.

(E) A certified test report from an approved independent testing laboratory that the product has been tested for slip coefficient and meets AASHTO M253, Class B.

Page 10-162, Subarticle 1081-1(A) Classifications, lines 4-7, delete the second and third sentences of the description for Type 3A.

Page 10-162, Subarticle 1081-1(B) Requirements, lines 26-30, replace the second paragraph with the following:

For epoxy resin systems used for embedding dowel bars, threaded rods, rebar, anchor bolts and other fixtures in hardened concrete, the manufacturer shall submit test results showing that the bonding system will obtain 125% of the specified required yield strength of the fixture. Furnish certification that, for the particular bolt grade, diameter and embedment depth required, the anchor system will not fail by adhesive failure and that there is no movement of the anchor bolt. For certification and anchorage, use 3,000 psi as the minimum Portland cement concrete compressive strength used in this test. Use adhesives that meet Section 1081.

List the properties of the adhesive on the container and include density, minimum and maximum temperature application, setting time, shelf life, pot life, shear strength and compressive strength.

Page 10-169, Subarticle 1081-3(G) Anchor Bolt Adhesives, delete this subarticle.

Page 10-179, Subarticle 1087-4(A) Composition, lines 39-41, replace the third paragraph with the following:

All intermixed and drop-on glass beads shall not contain more than 75 ppm arsenic or 200 ppm lead.

Page 10-180, Subarticle 1087-4(B) Physical Characteristics, line 8, replace the second paragraph with the following:

All intermixed and drop-on glass beads shall comply with NCGS § 136-30.2 and 23 USC § 109(r).

Page 10-181, Subarticle 1087-7(A) Intermixed and Drop-on Glass Beads, line 24, add the following after the first paragraph:

Use X-ray Fluorescence for the normal sampling procedure for intermixed and drop-on beads, without crushing, to check for any levels of arsenic and lead. If any arsenic or lead is detected, the sample shall be crushed and repeat the test using X-ray Fluorescence. If the X-ray Fluorescence test shows more than a LOD of 5 ppm, test the beads using United States Environmental Protection Agency Method 6010B, 6010C or 3052 for no more than 75 ppm arsenic or 200 ppm lead.

Page 10-204, Subarticle 1092-2(A) Performance and Test Requirements, replace **Table 1092-3 Minimum Coefficient of Retroreflection for NC Grade A** with the following:

TABLE 1092-3
MINIMUM COEFFICIENT OF RETROREFLECTION FOR NC GRADE A
(Candelas Per Lux Per Square Meter)

Observation Angle, degrees	Entrance Angle, degrees	White	Yellow	Green	Red	Blue	Fluorescent Yellow Green	Fluorescent Yellow
0.2	-4.0	525	395	52	95	30	420	315
0.2	30.0	215	162	22	43	10	170	130
0.5	-4.0	310	230	31	56	18	245	185
0.5	30.0	135	100	14	27	6	110	81
1.0	-4.0	**120**	60	8	16	3.6	64	48
1.0	30.0	45	34	4.5	9	2	36	27

HIGH STRENGTH CONCRETE FOR DRIVEWAYS:

(11-21-00) (Rev. 1-17-12) 848 SP10 R02

Use high early strength concrete for all driveways shown in the plans and as directed by the Engineer. Provide high early strength concrete that meets the requirements of Article 1000-5 of the *2012 Standard Specifications*.

Measurement and payment will be in accordance with Section 848 of the *2012 Standard Specifications*.

SELECT MATERIAL, CLASS III, TYPE 3:

(1-17-12) 1016, 1044 SP10 R05

Revise the *2012 Standard Specifications* as follows:

Page 10-39, Article 1016-3, CLASS III, add the following after line 14:

Type 3 Select Material

Type 3 select material is a natural or manufactured fine aggregate material meeting the following gradation requirements and as described in Sections 1005 and 1006:

Percentage of Total by Weight Passing							
3/8"	#4	#8	#16	#30	#50	#100	#200
100	95-100	65-100	35-95	15-75	5-35	0-25	0-8

Page 10-39, Article 1016-3, CLASS III, line 15, replace "either type" with "Type 1, Type 2 or Type 3".

Page 10-62, Article 1044-1, line 36, delete the sentence and replace with the following:

Subdrain fine aggregate shall meet Class III select material, Type 1 or Type 3.

Page 10-63, Article 1044-2, line 2, delete the sentence and replace with the following:

Subdrain coarse aggregate shall meet Class V select material.

SHOULDER AND SLOPE BORROW:

(3-19-13) 1019 SP10 R10

Use soil in accordance with Section 1019 of the *2012 Standard Specifications*. Use soil consisting of loose, friable, sandy material with a PI greater than 6 and less than 25 and a pH ranging from 5.5 to 7.0.

Soil with a pH ranging from 4.0 to 5.5 will be accepted without further testing if additional limestone is provided in accordance with the application rates shown in Table 1019-1A. Soil

type is identified during the soil analysis. Soils with a pH above 7.0 require acidic amendments to be added. Submit proposed acidic amendments to the Engineer for review and approval. Soils with a pH below 4.0 or that do not meet the PI requirements shall not be used.

TABLE 1019-1A
ADDITIONAL LIMESTONE APPLICATION RATE TO RAISE pH

pH TEST RESULT	Sandy Soils Additional Rate (lbs. / Acre)	Silt Loam Soils Additional Rate (lbs. / Acre)	Clay Loam Soils Additional Rate (lbs. / Acre)
4.0 - 4.4	1,000	4,000	6,000
4.5 - 4.9	500	3,000	5,000
5.0 - 5.4	NA	2,000	4,000

Note: Limestone application rates shown in this table are in addition to the standard rate of 4000 lbs. / acre required for seeding and mulching.

No direct payment will be made for providing additional lime or acidic amendments for Ph adjustment.

TEMPORARY SHORING:

(2-20-07) (Rev. 7-17-12) SP11 R02

Description

Temporary shoring includes cantilever, braced and anchored shoring and temporary mechanically stabilized earth (MSE) walls. Temporary shoring does not include trench boxes. At the Contractor's option, use any type of temporary shoring unless noted otherwise in the plans or as directed. Design and construct temporary shoring based on actual elevations and shoring dimensions in accordance with the contract and accepted submittals. Construct temporary shoring at locations shown in the plans and as directed. Temporary shoring is required to maintain traffic when a 2:1 (H:V) slope from the top of an embankment or bottom of an excavation will intersect the existing ground line less than 5 ft from the edge of pavement of an open travelway. This provision does not apply to pipe, inlet or utility installation unless noted otherwise in the plans.

Positive protection includes concrete barrier and temporary guardrail. Provide positive protection for temporary shoring at locations shown in the plans and as directed. Positive protection is required if temporary shoring is located in the clear zone in accordance with the *AASHTO Roadside Design Guide.*

(A) Cantilever and Braced Shoring

Cantilever shoring consists of steel sheet piles or H-piles with timber lagging. Braced shoring consists of sheet piles or H-piles with timber lagging and bracing such as beams, plates, walers, struts, rakers, etc. Define "piles" as sheet piles or H-piles.

(B) Anchored Shoring

Anchored shoring consists of sheet piles with walers or H-piles with timber lagging anchored with ground or helical anchors. Driven anchors may be accepted at the discretion of the Engineer. A ground anchor consists of a grouted steel bar or multi-strand tendon with an anchorage. A helical anchor consists of a lead section with a central steel shaft and at least one helix steel plate followed by extensions with only central shafts (no helixes) and an anchorage. Anchorages consist of steel bearing plates with washers and hex nuts for bars or steel wedge plates and wedges for strands. Use a prequalified Anchored Wall Contractor to install ground anchors. Define "anchors" as ground, helical or driven anchors.

(C) Temporary MSE Walls

Temporary MSE walls include temporary geosynthetic and wire walls. Define "temporary wall" as a temporary MSE wall. Define "reinforcement" as geotextile, geogrid, welded wire grid or metallic strip reinforcement.

Temporary geosynthetic walls consist of geotextile or geogrid reinforcement wrapped behind welded wire facing. Define "temporary geotextile wall" as a temporary geosynthetic wall with geotextile reinforcement and "temporary geogrid wall" as a temporary geosynthetic wall with geogrid reinforcement.

Temporary wire walls consist of welded wire grid or metallic strip reinforcement connected to welded wire facing. Define "Wire Wall Vendor" as the vendor supplying the temporary wire wall.

(D) Embedment

Define "embedment" for cantilever, braced and anchored shoring as the pile depth below the grade in front of shoring. Define "embedment" for temporary walls as the wall height below the grade in front of walls.

(E) Positive Protection

Define "unanchored or anchored portable concrete barrier" as portable concrete barrier (PCB) that meets Standard Drawing No. 1170.01 of the *2012 Roadway Standard Drawings*. Define "concrete barrier" as unanchored or anchored PCB or an approved equal. Define "temporary guardrail" as temporary steel beam guardrail that meets Standard Drawing No. 862.02 of the *2012 Roadway Standard Drawings*.

Materials

Refer to the *2012 Standard Specifications*.

Item	Section
Anchor Pins	1056-2
Concrete Barrier Materials	1170-2
Flowable Fill, Excavatable	1000-6
Geotextiles	1056
Neat Cement Grout	1003
Portland Cement Concrete	1000
Select Material	1016
Steel Beam Guardrail Materials	862-2
Steel Plates	1072-2
Steel Sheet Piles and H-Piles	1084
Untreated Timber	1082-2
Welded Wire Reinforcement	1070-3
Wire Staples	1060-8(D)

Provide Type 6 material certifications for shoring materials in accordance with Article 106-3 of the *2012 Standard Specifications*. Use Class IV select material (standard size No. ABC) for temporary guardrail. Use nonshrink neat cement grout or Class A concrete that meets Article 450-2 of the *2012 Standard Specifications* for drilled-in piles. Use untreated timber with a thickness of at least 3" and a bending stress of at least 1,000 psi for timber lagging. Provide steel bracing that meets ASTM A36.

(A) Shoring Backfill

Use Class II, Type 1, Class III, Class V or Class VI select material or material that meets AASHTO M 145 for soil classification A-2-4 with a maximum PI of 6 for shoring backfill except do not use A-2-4 soil for backfill around culverts.

(B) Anchors

Store anchor materials on blocking a minimum of 12" above the ground and protect it at all times from damage; and when placing in the work make sure it is free from dirt, dust, loose mill scale, loose rust, paint, oil or other foreign materials. Load, transport, unload and store anchor materials so materials are kept clean and free of damage. Damaged or deformed materials will be rejected.

(1) Ground Anchors

Use high-strength deformed steel bars that meet AASHTO M 275 or seven-wire strands that meet ASTM A886 or Article 1070-5 of the *2012 Standard Specifications*. Splice bars in accordance with Article 1070-9 of the *2012 Standard Specifications*. Do not splice strands. Use bondbreakers, spacers and centralizers that meet Article 6.3.5 of the *AASHTO LRFD Bridge Construction Specifications*.

(2) Helical Anchors

Use helical anchors with an ICC Evaluation Service, Inc. (ICC-ES) report. Helical anchors without an ICC-ES report may be approved at the discretion of the Engineer. Provide couplers, thread bar adapters and bolts recommended by the Anchor Manufacturer to connect helical anchors together and to piles.

(3) Anchorages

Provide steel plates for bearing plates and steel washers, hex nuts, wedge plates and wedges recommended by the Anchor Manufacturer.

(C) Temporary Walls

(1) Welded Wire Facing

Use welded wire reinforcement for welded wire facing, struts and wires. For temporary wire walls, provide welded wire facing supplied by the Wire Wall Vendor or a manufacturer approved or licensed by the vendor. For temporary wire walls with separate reinforcement and facing components, provide connectors (e.g., bars, clamps, plates, etc.) and fasteners (e.g., bolts, nuts, washers, etc.) required by the Wire Wall Vendor.

(2) Geotextiles

Provide Type 2 geotextile for separation and retention geotextiles. Provide Type 5 geotextile for geotextile reinforcement with wide width tensile strengths at ultimate in accordance with the accepted submittals.

(3) Geogrid Reinforcement

Handle and store geogrids in accordance with Article 1056-2 of the *2012 Standard Specifications*. Define "machine direction" (MD) and "cross-machine direction" (CD) for geogrids in accordance with ASTM D4439. Provide geogrids for geogrid reinforcement with short-term design strengths in accordance with the accepted submittals.

Use geogrids with a roll width of at least 4 ft and an "approved" or "approved for provisional use" status code. Geogrids are approved for short-term design strengths for a 3-year design life in the MD and CD based on material type. The list of approved geogrids with short-term design strengths is available from: www.ncdot.org/doh/operations/materials/soils/gep.html

Define material type from the website above for shoring backfill as follows:

Material Type	Shoring Backfill
Borrow	A-2-4 Soil
Fine Aggregate	Class II, Type 1 or Class III Select Material
Coarse Aggregate	Class V or VI Select Material

If an approved geogrid does not list a short-term design strength in the MD for the shoring backfill used, do not use the geogrid for geogrid reinforcement. If an approved geogrid does not list a short-term design strength in the CD for the shoring backfill used, do not install the geogrid with the MD parallel to the wall face.

(4) Welded Wire Grid and Metallic Strip Reinforcement

Provide welded wire grid and metallic strip reinforcement supplied by the Wire Wall Vendor or a manufacturer approved or licensed by the vendor. Use welded wire grid reinforcement ("mesh", "mats" and "ladders") that meet Article 1070-3 of the *2012 Standard Specifications* and metallic strip reinforcement ("straps") that meet ASTM A572 or A1011.

Preconstruction Requirements

(A) Concrete Barrier

Define "clear distance" behind concrete barrier as the horizontal distance between the barrier and edge of pavement. The minimum required clear distance for concrete barrier is shown in the plans. At the Contractor's option or if the minimum required clear distance is not available, set concrete barrier next to and up against traffic side of temporary shoring except for barrier above temporary walls. Concrete barrier with the minimum required clear distance is required above temporary walls.

(B) Temporary Guardrail

Define "clear distance" behind temporary guardrail as the horizontal distance between guardrail posts and temporary shoring. At the Contractor's option or if clear distance for cantilever, braced and anchored shoring is less than 4 ft, attach guardrail to traffic side of shoring as shown in the plans. Place ABC in clear distance and around guardrail posts instead of pavement. Do not use temporary guardrail above temporary walls.

(C) Temporary Shoring Designs

Before beginning temporary shoring design, survey existing ground elevations in the vicinity of shoring locations to determine actual design heights (H). Submit 8 copies of working drawings and 3 copies of design calculations and a PDF copy of each for temporary shoring designs in accordance with Article 105-2 of the *2012 Standard*

Specifications. Submit working drawings showing plan views, shoring profiles, typical sections and details of temporary shoring design and construction sequence. Do not begin shoring construction until a design submittal is accepted.

Have cantilever and braced shoring designed, detailed and sealed by an engineer licensed in the state of North Carolina. Use a prequalified Anchored Wall Design Consultant to design anchored shoring. Provide anchored shoring designs sealed by a Design Engineer approved as a Geotechnical Engineer (key person) for an Anchored Wall Design Consultant. Include details in anchored shoring working drawings of anchor locations and lock-off loads, unit grout/ground bond strengths for ground anchors or minimum installation torque and torsional strength rating for helical anchors and if necessary, obstructions extending through shoring or interfering with anchors. Include details in the anchored shoring construction sequence of pile and anchor installation, excavation and anchor testing.

Use a prequalified MSE Wall Design Consultant to design temporary walls. Provide temporary wall designs sealed by a Design Engineer approved as a Geotechnical Engineer (key person) for the MSE Wall Design Consultant. Include details in temporary wall working drawings of geotextile and reinforcement types, locations and directions and obstructions extending through walls or interfering with reinforcement.

(1) Soil Parameters

Design temporary shoring for the assumed soil parameters and groundwater elevations shown in the plans. Assume the following soil parameters for shoring backfill:

(a) Unit weight (γ) = 120 lb/cf;

(b)

Friction Angle (ϕ)	**Shoring Backfill**
30°	A-2-4 Soil
34°	Class II, Type 1 or Class III Select Material
38°	Class V or VI Select Material

(c) Cohesion (c) = 0 lb/sf.

(2) Traffic Surcharge

Design temporary shoring for a traffic surcharge of 250 lb/sf if traffic will be above and within H of shoring. This traffic surcharge does not apply to construction traffic. Design temporary shoring for any construction surcharge if construction traffic will be above and within H of shoring. For LRFD shoring designs, apply traffic (live load) surcharge in accordance with Figure C11.5.5-3 of the *AASHTO LRFD Bridge Design Specifications*.

(3) Cantilever, Braced and Anchored Shoring Designs

Use shoring backfill for fill sections and voids between cantilever, braced and anchored shoring and the critical failure surface. Use concrete or grout for embedded portions of drilled-in H-piles. Do not use drilled-in sheet piles.

Define "top of shoring" for cantilever, braced and anchored shoring as where the grade intersects the back of sheet piles or H-piles and timber lagging. Design cantilever, braced and anchored shoring for a traffic impact load of 2,000 lb/ft applied 18" above top of shoring if concrete barrier is above and next to shoring or temporary guardrail is above and attached to shoring. For anchored shoring designs, apply traffic impact load as horizontal load (P_{HI}) in accordance with Figure 3.11.6.3-2(a) of the AASHTO LRFD specifications.

Extend cantilever, braced and anchored shoring at least 32" above top of shoring if shoring is designed for traffic impact. Otherwise, extend shoring at least 6" above top of shoring.

Design cantilever, braced and anchored shoring for a maximum deflection of 3" if the horizontal distance to the closest edge of pavement or structure is less than H. Otherwise, design shoring for a maximum deflection of 6". Design cantilever and braced shoring in accordance with the plans and *AASHTO Guide Design Specifications for Bridge Temporary Works*.

Design anchored shoring in accordance with the plans and Article 11.9 of the *AASHTO LRFD Bridge Design Specifications*. Use a resistance factor of 0.80 for tensile resistance of anchors with bars, strands or shafts. Extend the unbonded length for ground anchors and the shallowest helix for helical anchors at least 5 ft behind the critical failure surface. Do not extend anchors beyond right-of-way or easement limits. If existing or future obstructions such as foundations, guardrail posts, pavements, pipes, inlets or utilities will interfere with anchors, maintain a clearance of at least 6" between obstructions and anchors.

(4) Temporary Wall Designs

Use shoring backfill in the reinforced zone of temporary walls. Separation geotextiles are required between shoring backfill and backfill, natural ground or culverts along the sides of the reinforced zone perpendicular to the wall face. For Class V or VI select material in the reinforced zone, separation geotextiles are also required between shoring backfill and backfill or natural ground on top of and at the back of the reinforced zone.

Design temporary walls in accordance with the plans and Article 11.10 of the *AASHTO LRFD Bridge Design Specifications*. Embed temporary walls at least 18" except for walls on structures or rock as determined by the Engineer. Use a uniform reinforcement length throughout the wall height of at least 0.7H or 6 ft, whichever is greater. Extend the reinforced zone at least 6" beyond end of reinforcement. Do not locate the reinforced zone outside right-of-way or easement limits.

Use the simplified method for determining maximum reinforcement loads in

accordance with the AASHTO LRFD specifications. For geotextile reinforcement, use geotextile properties approved by the Department or default values in accordance with the AASHTO LRFD specifications. For geogrid reinforcement, use approved geogrid properties available from the website shown elsewhere in this provision. Use geosynthetic properties for the direction reinforcement will be installed, a 3-year design life and the shoring backfill type in the reinforced zone.

Do not use more than 4 different reinforcement strengths for each temporary geosynthetic wall. Design temporary geotextile walls for a reinforcement coverage ratio (R_c) of 1.0 and temporary geogrid walls for an R_c of at least 0.8. For geogrid reinforcement with an R_c of less than 1.0, use a maximum horizontal clearance between geogrids of 3 ft and stagger reinforcement so geogrids are centered over gaps in the reinforcement layer below.

For temporary geosynthetic walls, use "L" shaped welded wire facing with 18" to 24" long legs. Locate geotextile or geogrid reinforcement so reinforcement layers are at the same level as the horizontal legs of welded wire facing. Use vertical reinforcement spacing equal to facing height. Wrap geotextile or geogrid reinforcement behind welded wire facing and extend reinforcement at least 3 ft back behind facing into shoring backfill.

For temporary wire walls with separate reinforcement and facing components, attach welded wire grid or metallic strip reinforcement to welded wire facing with a connection approved by the Department. For temporary geogrid and wire walls, retain shoring backfill at welded wire facing with retention geotextiles and extend geotextiles at least 3 ft back behind facing into backfill.

(D) Preconstruction Meeting

The Engineer may require a shoring preconstruction meeting to discuss the construction, inspection and testing of the temporary shoring. If required, schedule this meeting after all shoring submittals have been accepted. The Resident, District or Bridge Maintenance Engineer, Bridge or Roadway Construction Engineer, Geotechnical Operations Engineer, Contractor and Shoring Contractor Superintendent will attend this preconstruction meeting.

Construction Methods

Control drainage during construction in the vicinity of shoring. Direct run off away from shoring and shoring backfill. Contain and maintain backfill and protect material from erosion.

Install positive protection in accordance with the contract and accepted submittals. Use PCB in accordance with Section 1170 of the *2012 Standard Specifications* and Standard Drawing No. 1170.01 of the *2012 Roadway Standard Drawings*. Use temporary guardrail in accordance with Section 862 of the *2012 Standard Specifications* and Standard Drawing No. 862.01, 862.02 and 862.03 of the *2012 Roadway Standard Drawings*.

(A) Tolerances

Construct shoring with the following tolerances:

(1) Horizontal wires of welded wire facing are level in all directions,

(2) Shoring location is within 6" of horizontal and vertical alignment shown in the accepted submittals, and

(3) Shoring plumbness (batter) is within 2° of vertical.

(B) Cantilever, Braced and Anchored Shoring Installation

If overexcavation behind cantilever, braced or anchored shoring is shown in the accepted submittals, excavate before installing piles. Otherwise, install piles before excavating for shoring. Install cantilever, braced or anchored shoring in accordance with the construction sequence shown in the accepted submittals. Remove piles and if applicable, timber lagging when shoring is no longer needed.

(1) Pile Installation

Install piles with the minimum required embedment and extension in accordance with Subarticles 450-3(D) and 450-3(E) of the *2012 Standard Specifications* except that a pile driving equipment data form is not required. Piles may be installed with a vibratory hammer as approved by the Engineer.

Do not splice sheet piles. Use pile excavation to install drilled-in H-piles. After filling holes with concrete or grout to the elevations shown in the accepted submittals, remove any fluids and fill remaining portions of holes with flowable fill. Cure concrete or grout at least 7 days before excavating.

Notify the Engineer if refusal is reached before pile excavation or driven piles attain the minimum required embedment. When this occurs, a revised design submittal may be required.

(2) Excavation

Excavate in front of piles from the top down in accordance with the accepted submittals. For H-piles with timber lagging and braced and anchored shoring, excavate in staged horizontal lifts with a maximum height of 5 ft. Remove flowable fill and material in between H-piles as needed to install timber lagging. Position lagging with at least 3" of contact in the horizontal direction between the lagging and pile flanges. Do not excavate the next lift until timber lagging for the current lift is installed and if applicable, bracing and anchors for the current lift are accepted. Backfill behind cantilever, braced or anchored shoring with shoring backfill.

(3) Anchor Installation

If applicable, install foundations located behind anchored shoring before installing anchors. Fabricate and install ground anchors in accordance with the accepted submittals, Articles 6.4 and 6.5 of the *AASHTO LRFD Bridge Construction Specifications* and the following unless otherwise approved:

(a) Materials in accordance with this provision are required instead of materials conforming to Articles 6.4 and 6.5.3 of the AASHTO LRFD Specifications,

(b) Encapsulation-protected ground anchors in accordance with Article 6.4.1.2 of the AASHTO LRFD specifications are not required, and

(c) Corrosion protection for unbonded lengths of ground anchors and anchorage covers are not required.

Install helical anchors in accordance with the accepted submittals and Anchor Manufacturer's instructions. Measure torque during installation and do not exceed the torsional strength rating of the helical anchor. Attain the minimum required installation torque and penetration before terminating anchor installation. When replacing a helical anchor, embed last helix of the replacement anchor at least 3 helix plate diameters past the location of the first helix of the previous anchor.

(4) Anchor Testing

Proof test and lock-off anchors in accordance with the accepted submittals and Article 6.5.5 of the *AASHTO LRFD Bridge Construction Specifications* except for the acceptance criteria in Article 6.5.5.5. For the AASHTO LRFD specifications, "ground anchor" refers to a ground or helical anchor and "tendon" refers to a bar, strand or shaft.

(a) Anchor Acceptance

Anchor acceptance is based in part on the following criteria.

(i) For ground and helical anchors, total movement is less than 0.04" between the 1 and 10 minute readings or less than 0.08" between the 6 and 60 minute readings.

(ii) For ground anchors, total movement at maximum test load exceeds 80% of the theoretical elastic elongation of the unbonded length.

(b) Anchor Test Results

Submit 2 copies of anchor test records including movement versus load plots for each load increment within 24 hours of completing each row of anchors. The Engineer will review the test records to determine if the anchors are acceptable.

If the Engineer determines an anchor is unacceptable, revise the anchor design or installation methods. Submit a revised anchored shoring design for acceptance and provide an acceptable anchor with the revised design or installation methods. If required, replace the anchor or provide additional anchors with the revised design or installation methods.

(C) Temporary Wall Installation

Excavate as necessary for temporary walls in accordance with the plans and accepted submittals. If applicable, install foundations located in the reinforced zone before placing shoring backfill or reinforcement unless otherwise approved. Notify the Engineer when foundation excavation is complete. Do not place shoring backfill or reinforcement until excavation dimensions and foundation material are approved.

Erect welded wire facing with no negative batter (wall face leaning forward) so the wall position is as shown in the plans and accepted submittals. Set welded wire facing adjacent to each other in the horizontal and vertical direction to completely cover the wall face with facing. Stagger welded wire facing to create a running bond by centering facing over joints in the row below.

Wrap geotextile reinforcement and retention geotextiles behind welded wire facing as shown in the plans and accepted submittals and cover geotextiles with at least 3" of shoring backfill. Overlap adjacent geotextile reinforcement and retention and separation geotextiles at least 18" with seams oriented perpendicular to the wall face. Hold geotextiles in place with wire staples or anchor pins as needed.

Place reinforcement within 3" of locations shown in the plans and accepted submittals and in slight tension free of kinks, folds, wrinkles or creases. Install reinforcement with the direction shown in the plans and accepted submittals. For temporary wire walls with separate reinforcement and facing components, attach welded wire grid or metallic strip reinforcement to welded wire facing as shown in the accepted submittals. Do not splice or overlap reinforcement so seams are parallel to the wall face. Contact the Engineer when unanticipated existing or future obstructions such as foundations, pavements, pipes, inlets or utilities will interfere with reinforcement.

Place shoring backfill in the reinforced zone in 8" to 10" thick lifts. Compact A-2-4 soil and Class II, Type 1 and Class III select material in accordance with Subarticle 235-3(C) of the *2012 Standard Specifications*. Use only hand operated compaction equipment to compact backfill within 3 ft of welded wire facing. At a distance greater than 3 ft, compact shoring backfill with at least 4 passes of an 8 ton to 10 ton vibratory roller in

a direction parallel to the wall face. Smooth wheeled or rubber tired rollers are also acceptable for compacting backfill. Do not use sheepsfoot, grid rollers or other types of compaction equipment with feet. Do not displace or damage reinforcement when placing and compacting shoring backfill. End dumping directly on geotextile or geogrid reinforcement is not permitted. Do not operate heavy equipment on reinforcement until it is covered with at least 8" of shoring backfill. Replace any damaged reinforcement to the satisfaction of the Engineer.

Backfill for temporary walls outside the reinforced zone in accordance with Article 410-8 of the *2012 Standard Specifications*. Bench temporary walls into the sides of excavations where applicable. For temporary geosynthetic walls with top of wall within 5 ft of finished grade, remove top facing and incorporate top reinforcement layer into fill when placing fill in front of wall. Temporary walls remain in place permanently unless otherwise required.

Measurement and Payment

Temporary Shoring will be measured and paid in square feet. Temporary walls will be measured as the square feet of exposed wall face area. Cantilever, braced or anchored shoring will be measured as the square feet of exposed shoring face area with the shoring height equal to the difference between the top and bottom of shoring elevations. Define "top of shoring" as where the grade intersects the back of sheet piles or H-piles and timber lagging. Define "bottom of shoring" as where the grade intersects front of sheet piles or H-piles and timber lagging. No measurement will be made for any embedment, shoring extension above top of shoring or pavement thickness above temporary walls.

The contract unit price for *Temporary Shoring* will be full compensation for providing shoring designs, submittals and materials, excavating, backfilling, hauling and removing excavated materials and supplying all labor, tools, equipment and incidentals necessary to construct temporary shoring.

No payment will be made for temporary shoring not shown in the plans or required by the Engineer including shoring for OSHA reasons or the Contractor's convenience. No value engineering proposals will be accepted based solely on revising or eliminating shoring locations shown in the plans or estimated quantities shown in the bid item sheets as a result of actual field measurements or site conditions.

PCB will be measured and paid in accordance with Section 1170 of the *2012 Standard Specifications*. No additional payment will be made for anchoring PCB for temporary shoring. Costs for anchoring PCB will be incidental to temporary shoring.

Temporary guardrail will be measured and paid for in accordance with Section 862 of the *2012 Standard Specifications*.

Payment will be made under:

Pay Item	**Pay Unit**
Temporary Shoring	Square Foot

TRUCK MOUNTED CHANGEABLE MESSAGE SIGNS:
(8-21-12) 1101.02 SP11 R10

Revise the *2012 Roadway Standard Drawings* as follows:

Drawing No. 1101.02, Sheet 12, TEMPORARY LANE CLOSURES, replace General Note #11 with the following:

11- TRUCK MOUNTED CHANGEABLE MESSAGE SIGNS (TMCMS) USED ON SHADOW VEHICLES FOR "IN LANE" ACTIVITIES SHALL BE A MINIMUM OF 43" X 73". THE DISPLAY PANEL SHALL HAVE FULL MATRIX CAPABILITY WITH THE CAPABILITY TO PROVIDE 2 MESSAGE LINES WITH 7 CHARACTERS PER LINE WITH A MINIMUM CHARACTER HEIGHT OF 18". FOR ADDITIONAL MESSAGING, CONTACT THE WORK ZONE TRAFFIC CONTROL SECTION.

12- TMCMS USED FOR ADVANCED WARNING ON VEHICLES LOCATED ON THE SHOULDER MAY BE SMALLER THAN 43" X 73". THE DISPLAY PANEL SHALL HAVE THE CAPABILITY TO PROVIDE 2 MESSAGE LINES WITH 7 CHARACTERS PER LINE WITH A MINIMUM CHARACTER HEIGHT OF 18". FOR ADDITIONAL MESSAGING, CONTACT THE WORK ZONE TRAFFIC CONTROL SECTION.

Drawing No. 1101.02, Sheet 13, TEMPORARY LANE CLOSURES, replace General Note #12 with the following:

12- TRUCK MOUNTED CHANGEABLE MESSAGE SIGNS (TMCMS) USED ON SHADOW VEHICLES FOR "IN LANE" ACTIVITIES SHALL BE A MINIMUM OF 43" X 73". THE DISPLAY PANEL SHALL HAVE FULL MATRIX CAPABILITY WITH THE CAPABILITY TO PROVIDE 2 MESSAGE LINES WITH 7 CHARACTERS PER LINE WITH A MINIMUM CHARACTER HEIGHT OF 18". FOR ADDITIONAL MESSAGING, CONTACT THE WORK ZONE TRAFFIC CONTROL SECTION.

13- TMCMS USED FOR ADVANCED WARNING ON VEHICLES LOCATED ON THE SHOULDER MAY BE SMALLER THAN 43" X 73". THE DISPLAY PANEL SHALL HAVE THE CAPABILITY TO PROVIDE 2 MESSAGE LINES WITH 7 CHARACTERS PER LINE WITH A MINIMUM CHARACTER HEIGHT OF 18". FOR ADDITIONAL MESSAGING, CONTACT THE WORK ZONE TRAFFIC CONTROL SECTION.

PERMANENT SEEDING AND MULCHING:
(7-1-95) 1660 SP16 R02

The Department desires that permanent seeding and mulching be established on this project as soon as practical after slopes or portions of slopes have been graded. As an incentive to obtain an early stand of vegetation on this project, the Contractor's attention is called to the following:

For all permanent seeding and mulching that is satisfactorily completed in accordance with the requirements of Section 1660 in the *2012 Standard Specifications* and within the following percentages of elapsed contract times, an additional payment will be made to the Contractor as an incentive additive. The incentive additive will be determined by multiplying the number of

acres of seeding and mulching satisfactorily completed times the contract unit bid price per acre for Seeding and Mulching times the appropriate percentage additive.

Percentage of Elapsed Contract Time	Percentage Additive
0% - 30%	30%
30.01% - 50%	15%

Percentage of elapsed contract time is defined as the number of calendar days from the date of availability of the contract to the date the permanent seeding and mulching is acceptably completed divided by the total original contract time.

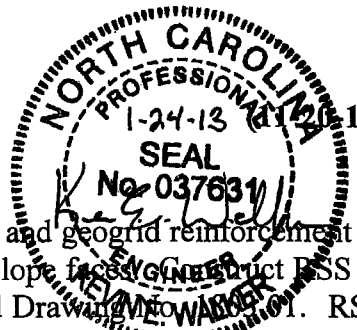

1-24-13 (11-20-12)

REINFORCED SOIL SLOPES:

Description

Construct reinforced soil slopes (RSS) consisting of select material and geogrid reinforcement in the reinforced zone with permanent soil reinforcement matting on slope faces. Construct RSS in accordance with the contract and if included in the plans, Standard Drawing No. 1803.01. RSS are required to reinforce embankments and stabilize slopes at locations shown in the plans and as directed. Define "geogrids" as primary or secondary geogrids and "standard RSS" as a RSS that meets the standard reinforced soil slope drawing (Standard Drawing No. 1803.01).

Materials

Refer to Division 10 of the *Standard Specifications*.

Item	Section
Anchor Pins	1056-2
Select Material	1016
Shoulder and Slope Borrow	1019-2
Wire Staples	1060-8(D)

Unless required otherwise in the plans, use Class I, II or III select material in the reinforced zone for 1.5:1 (H:V) or flatter RSS. For RSS steeper than 1.5:1 (H:V), use Class I select material in the reinforced zone that meets Article 1019-2 of the *Standard Specifications* except for select material that meets AASHTO M 145 for soil classifications A-4 and A-5. Do not use A-4 or A-5 soil or Class II or III select material for RSS steeper than 1.5:1 (H:V).

Use permanent soil reinforcement matting on slope faces of RSS that meets the *Permanent Soil Reinforcement Mat* provision.

(A) Geogrids

Handle and store geogrids in accordance with Article 1056-2 of the *Standard Specifications*. Define "machine direction" (MD) and "cross-machine direction" (CD) for geogrids in accordance with ASTM D4439. Provide Type 1 material certifications for geogrid strengths in the MD and CD in accordance with Article 1056-3 of the *Standard Specifications*. Test geogrids in accordance with ASTM D6637.

Provide primary and secondary geogrids in accordance with Standard Drawing No. 1803.01 for standard RSS. Otherwise, provide primary and secondary geogrids with design strengths in accordance with the plans.

Use geogrids with a roll width of at least 4 ft. Use primary geogrids with an "approved" status code and secondary geogrids with an "approved" or "approved for provisional use" status code. Do not use geogrids with an "approved for provisional use" status code for primary geogrids.

Geogrids are approved for long-term design strengths for a 75-year design life in the MD and CD based on material type. The list of approved geogrids with long-term design strengths is available from:
www.ncdot.org/doh/operations/materials/soils/gep.html

Define material type from the website above for select material as follows:

Material Type	Select Material
Borrow	Class I Select Material
Fine Aggregate	Class II or Class III Select Material

If an approved geogrid does not list long-term design strengths in the MD for the select material used, do not use the geogrid for primary geogrid. If an approved geogrid does not list long-term design strengths in the CD for the select material used, do not use the geogrid for secondary geogrid.

Construction Methods

Before starting RSS construction, the Engineer may require a preconstruction meeting to discuss the construction and inspection of the RSS. If required, schedule this meeting after all material certifications have been submitted. The Resident or District Engineer, Roadway Construction Engineer, Geotechnical Operations Engineer, Contractor and RSS Contractor Superintendent will attend this preconstruction meeting.

Control drainage during construction in the vicinity of RSS. Direct run off away from RSS, select material and backfill. Contain and maintain select material and backfill and protect material from erosion.

Excavate as necessary for RSS in accordance with the contract. Maintain a horizontal clearance of at least 12" between the ends of primary geogrids and limits of reinforced zone as shown in the plans. When excavating existing slopes, bench slopes in accordance with Subarticle 235-3(A) of the *Standard Specifications*. Notify the Engineer when excavation is complete. Do not place primary geogrids until excavation dimensions and in-situ material are approved.

Place geogrids within 3" of locations shown in the plans and in slight tension free of kinks, folds, wrinkles or creases. Hold geogrids in place with wire staples or anchor pins as needed. Install geogrids with the orientation, dimensions and number of layers shown in the plans. Contact the Engineer when existing or future obstructions such as foundations, pavements, pipes, inlets or utilities will interfere with geogrids. If necessary, the top geogrid layer may be lowered up to 9" to avoid obstructions. Extend geogrids to slope faces.

Install primary geogrids with the MD perpendicular to the embankment centerline. The MD is the direction of the length or long dimension of the geogrid roll. Unless shown otherwise in the plans, do not splice or overlap primary geogrids in the MD so splices or overlaps are parallel to toe of RSS. Unless shown otherwise in the plans and except for clearances at the ends of primary geogrids, completely cover select material at each primary geogrid layer with geogrid so primary geogrids are adjacent to each other in the CD, i.e., perpendicular to the MD. The CD is the direction of the width or short dimension of the geogrid roll.

Install secondary geogrids with MD parallel to toe of RSS. Secondary geogrids should be continuous for each secondary geogrid layer. If secondary geogrid roll length is too short, overlap ends of secondary geogrid rolls at least 12" in the direction that select material will be placed to prevent lifting the edge of the top geogrid.

Place select material in the reinforced zone in 8" to 10" thick lifts and compact material in accordance with Subarticle 235-3(C) of the *Standard Specifications*. For RSS steeper than 1.5:1 (H:V), compact slope faces with an approved method. Do not use sheepsfoot, grid rollers or other types of compaction equipment with feet. Do not displace or damage geogrids when

placing and compacting select material. End dumping directly on geogrids is not permitted. Do not operate heavy equipment on geogrids until they are covered with at least 8" of select material. To prevent damaging geogrids, minimize turning and avoid sudden braking and sharp turns with compaction equipment. Replace any damaged geogrids to the satisfaction of the Engineer. Construct remaining portions of embankments outside the reinforced zone in accordance with Section 235 of the *Standard Specifications*.

Plate slope faces of RSS with at least 6" of shoulder and slope borrow except when select material in the reinforced zone meets Article 1019-2 of the *Standard Specifications*. Install permanent soil reinforcement matting in accordance with the *Permanent Soil Reinforcement Mat* provision to minimize sloughing of RSS until vegetation is established. Seed slope faces and install permanent soil reinforcement matting as soon as possible to prevent erosion damage to slope faces of RSS. If damage occurs, repair RSS and reseed slope faces before installing matting.

Measurement and Payment

Reinforced Soil Slopes will be measured and paid in square yards. RSS will be measured along the slope faces of RSS before installing permanent soil reinforcement matting as the square yards of RSS. No payment will be made for repairing damaged RSS.

The contract unit price for *Reinforced Soil Slopes* will be full compensation for providing labor, tools, equipment and RSS materials, compacting select materials and supplying and placing geogrids, select material, shoulder and slope borrow and any incidentals necessary to construct RSS except for permanent soil reinforcement matting. The contract unit price for *Reinforced Soil Slopes* will also be full compensation for excavating and hauling and removing excavated materials to install RSS.

Permanent soil reinforcement matting will be measured and paid in accordance with the *Permanent Soil Reinforcement Mat* provision.

Payment will be made under:

Pay Item	**Pay Unit**
Reinforced Soil Slopes	Square Yard

PROJECT SPECIAL PROVISIONS
GEOENVIRONMENTAL

CONTAMINATED SOIL (2/1/2013)

The Contractor's attention is directed to the fact that soil contaminated with petroleum hydrocarbon compounds exist within the project area. The known areas of contamination are indicated on corresponding plans sheets. Information relating to these contaminated areas, sample locations, and investigation reports are available at the following web address by navigating to the correct letting year and month then selecting, "Plans and Proposals", "Rowan P-5206A", "GeoEnvironmental":

http://dotw-xfer01.dot.state.nc.us/dsplan/

Petroleum contaminated soil may be encountered during any earthwork activities on the project. The Contractor shall only excavate those soils that the Engineer designates necessary to complete a particular task. The Engineer shall determine if soil is contaminated based on petroleum odors and unusual soil staining. Contaminated soil not required to be excavated is to remain in place and undisturbed. Undisturbed soil shall remain in place, whether contaminated or not. The Contractor shall transport all contaminated soil excavated from the project to a facility licensed to accept contaminated soil.

In the event that the Contractor chooses to stockpile the soil temporarily, the stockpile shall be created within the property boundaries of the source material and in accordance with the Stockpile Detail found in the plans. If the volume of contaminated material exceeds available space on site, the Contractor shall obtain a permit from the NCDENR UST Section's Regional Office for off-site temporary storage. Stockpiling contaminated soil will be incidental to the project. The Contractor shall provide disposal manifests and weigh tickets to the Engineer for review and approval. The Engineer will in turn provide the GeoEnvironmental Section with a copy of the disposal manifests and weigh tickets for their records.

Measurement and Payment:

The quantity of contaminated soil hauled, and disposed of shall be the actual number of tons of material, which has been acceptably transported and weighed with certified scales as documented by disposal manifests and weigh tickets. The quantity of contaminated soil, measured as provided above, shall be paid for at the contract unit price per ton for "Hauling, and Disposal of Petroleum Contaminated Soil".

The above price and payment shall be full compensation for all work covered by this section, including, but not limited to loading, transportation, weighing, laboratory testing, disposal, equipment, decontamination of equipment, labor, and personal protective equipment. Excavation of petroleum contaminated soil will be incidental to the project.

Payment shall be made under:

Pay Item	Pay Unit
Hauling and Disposal of Petroleum Contaminated Soil	Ton

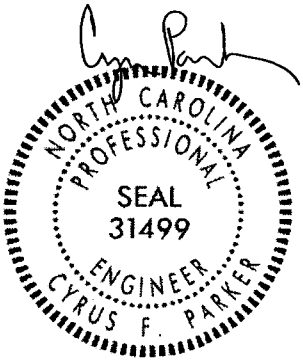

Project: P-5206A
County: Rowan

V&M Vaughn & Melton

Consulting Engineers
3809-L Beam Road
Charlotte, NC 28217
704-357-0488
www.vaughnmelton.com

PROJECT SPECIAL PROVISIONS
Utility Construction

Prepared By: Mr. Reece Schuler, PE, LSI

All proposed utility construction shall meet the applicable requirements of the NC Department of Transportation's Standard Specifications for Roads and Structures dated January 12, 2012.

Revise the 2012 Standard Specifications as follows:

Page 15-1, Article 1500-2 Cooperation with the Utility Owner, paragraph 2, add the following sentences:

All water lines on this project belong to Salisbury Rowan Utilities. All sewer lines, with the exception of two 3" force main sewer lines along the south side of Peeler Road belong to Salisbury Rowan Utilities.

A. The contact person for Salisbury Rowan Utilities is Mr. Jason Wilson, PE at (704) 216-7553. The contractor shall provide access for the owner's representatives to all phases of construction. Any work on these lines must be coordinated through the Engineer and the utility owner before beginning.

Page 15-1, Article 1500-2 Cooperation with the Utility Owner, lines 21-22, replace sentence with:

The utility owner staff must operate all existing controls.

Page 15-1, Article 1500-2 Cooperation with the Utility Owner, line 23, replace *24 hours* with *48 hours*.

Page 15-2, Article 1500-7 Submittals and Records, line 23, add the following sentence:

USA made products are required for all water and sewer construction and replacement.

Page 15-2, Article 1500-9 Placing Pipelines into Service, line 38, replace *ample time to make arrangements* with *minimum advance notice of 48 hours for water and sewer interruptions*.

Page 15-3, Article 1505-3 Construction Methods, lines 13 & 14, replace sentence with:

Comply with AWWA, ASTM, and City of Salisbury Uniform Construction Standards and Specifications (for water and sewer installation), along with the product manufacturer requirements for installing utilities.

Page 15-4, Article 1505-3 (E) Thrust Restraint, paragraph 3, add the following sentences:

Acceptable joint restraint for water lines are domestic manufactured Mega-lugs and Romac GripRing. No concrete blocking behind fire hydrants.

Page 15-5, Article 1510-2 Materials, lines 20, 21 & 22, replace sentence with:

Acceptable water pipe materials are domestic manufactured (water pipe) pressure class 350 ductile iron pipe. 2" water pipe shall be type K copper where under pavement or road crossings. 2" SDR 13.5 is allowed outside of roads where separation conflicts do not exist.

Page 15-6, Article 1510-3 (B) Testing and Sterilization, line 28, replace sentence with:

Sterilize water lines according to NCDENR, City of Salisbury requirements, and AWWA C651 (lines must be initially chlorinated to 100 mg/l).

Page 15-6, Article 1510-3 (B) Testing and Sterilization, lines 29 & 30, replace *an approved independent testing laboratory* with *the City of Salisbury Water Plant Laboratory.*

Page 15-6, Article 1510-3 (B) Testing and Sterilization, line 33, add the following sentence:

Waste water from the sterilization of water lines shall not be placed into the sewer system.

Page 15-7, Article 1515-2 Materials, line 31, delete *screw or*

Page 15-8, Article 1515-3 (D) Fire Hydrants, line 29, replace *Place at least 7 cf of clean crushed stone around the base of the hydrant* with *Place at least ½ cubic yard of #67 washed stone under and around the base of the hydrant.*

Page 15-10, Article 1520-2 Materials, lines 7 & 8, replace the sentence with:

Acceptable water pipe materials are domestic manufactured (sewer pipe) pressure class 350 ductile iron pipe where existing pipe is ductile iron, under pavement, for road crossings, and where separation issues occur. SDR 35 PVC pipe with type III bedding may be used where the existing pipe is SDR 35, located outside of the road or pavement, and no separation conflicts exist.

Page 15-10, Article 1520-3 (A)(1) Gravity Sanitary Sewer, line 34, replace *Use fittings or saddles* with *Use fittings (wyes) or saddles*

Page 15-11, Article 1520-3 (A)(2)(a)(b) Gravity Sanitary Sewer, lines 6-24, delete these two sections:

Low pressure air testing is required by utility owner.

Page 15-11, Article 1520-3 (A)(2)(c) Gravity Sanitary Sewer, lines 28, 29 & 30, replace with the following sentences:

Fill the pipe with air to 4.0 psi and allow the pressure to stabilize at 4.0 psi before starting the test. Measure the time for the pressure to drop 0.5 psi to the new pressure of 3.5 psi.

Page 15-13, Article 1525-2 Materials, lines 10, add the following sentence:

All sewer manholes shall be precast manholes (no brick or block allowed).

Date: February 4, 2013 67 Project: P-5206A
County: Rowan

PROJECT SPECIAL PROVISIONS
Utilities by Others

General:

The following utility companies have facilities that will be in conflict with the construction of this project:

A. Duke Energy
B. AT&T
C. Piedmont Natural Gas
D. Fibrant Cable
E. Time Warner Cable
F. Windstream Concord Telephone

The conflicting facilities of these concerns will be adjusted prior to the date of availability, unless otherwise noted and are therefore listed in these special provisions for the benefit of the Contractor. All utility work listed herein will be done by the utility owners. All utilities are shown on the plans from the best available information.

The Contractor's attention is directed to Article 105.8 of the Standard Specifications.

Utilities Requiring Adjustment:

A. Duke Energy – Power (Distribution)

1. Duke Energy has facilities in conflict with construction along –YB–, –Y23–, –Y23A–, –Y2–, and –Y21–. All facilities in conflict with construction will be relocated by August 28, 2013. See Utilities by Others Plans for details.

   Contact: William Huffstetler at (704) 866-5109

B. AT&T – Telecommunications

1. AT&T has facilities in conflict with construction along –YB–, –Y2–, –Y3–, –Y20–, –Y21–, and –Y23A–. All facilities in conflict with construction will be relocated by November 19, 2013. See Utilities by Others Plans for details.

   Contact: Dan Owens at (704) 779-4415

C. Piedmont Natural Gas – Gas

1. All facilities in conflict with construction will be relocated by April 29, 2013. See Utilities by Others Plans for details.

Contact: James Graham at (704) 587-6844

D. Fibrant Cable – Cable

1. Fibrant cable intends to have all facilities in conflict with construction relocated by November 29, 2013; however, Fibrant cannot perform their relocation until Duke and/or AT&T install their new poles for Fibrant to attach to. See Utilities by Others Plans for details.

   Contact: Keith Storm at (676) 641-3535

E. Time Warner Cable – Cable

1. All facilities in conflict with construction will be relocated by August 28, 2013. See Utilities by Others Plans for details.

   Contact: Mike Hamby at (980) 722-5122

F. Windstream Concord Telephone – Telecommunications

1. All facilities in conflict with construction will be relocated by August 28, 2013. See Utilities by Others Plans for details.

   Contact: James Foley at (704) 722-2822

P-5206A **Project Special Provisions** **Rowan County**
Erosion Control

STABILIZATION REQUIREMENTS:

Stabilization for this project shall comply with the time frame guidelines as specified by the NCG-010000 general construction permit effective August 3, 2011 issued by the North Carolina Department of Environment and Natural Resources Division of Water Quality. Temporary or permanent ground cover stabilization shall occur within 7 calendar days from the last land-disturbing activity, with the following exceptions in which temporary or permanent ground cover shall be provided in 14 calendar days from the last land-disturbing activity:

- Slopes between 2:1 and 3:1, with a slope length of 10 ft. or less
- Slopes 3:1 or flatter, with a slope of length of 50 ft. or less
- Slopes 4:1 or flatter

The stabilization timeframe for High Quality Water (HQW) Zones shall be 7 calendar days with no exceptions for slope grades or lengths. High Quality Water Zones (HQW) Zones are defined by North Carolina Administrative Code 15A NCAC 04A.0105 (25). Temporary and permanent ground cover stabilization shall be achieved in accordance with the provisions in this contract and as directed.

SEEDING AND MULCHING: (West)

The kinds of seed and fertilizer, and the rates of application of seed, fertilizer, and limestone, shall be as stated below. During periods of overlapping dates, the kind of seed to be used shall be determined. All rates are in pounds per acre.

Shoulder and Median Areas

August 1 - June 1		**May 1 - September 1**	
20#	Kentucky Bluegrass	20#	Kentucky Bluegrass
75#	Hard Fescue	75#	Hard Fescue
25#	Rye Grain	10#	German or Browntop Millet
500#	Fertilizer	500#	Fertilizer
4000#	Limestone	4000#	Limestone

Areas Beyond the Mowing Pattern, Waste and Borrow Areas:

August 1 - June 1		**May 1 - September 1**	
100#	Tall Fescue	100#	Tall Fescue
15#	Kentucky Bluegrass	15#	Kentucky Bluegrass
30#	Hard Fescue	30#	Hard Fescue
25#	Rye Grain	10#	German or Browntop Millet
500#	Fertilizer	500#	Fertilizer
4000#	Limestone	4000#	Limestone

70

Approved Tall Fescue Cultivars

2nd Millennium	Duster	Magellan	Rendition
Avenger	Endeavor	Masterpiece	Scorpion
Barlexas	Escalade	Matador	Shelby
Barlexas II	Falcon II, III, IV & V	Matador GT	Signia
Barrera	Fidelity	Millennium	Silverstar
Barrington	Finesse II	Montauk	Southern Choice II
Biltmore	Firebird	Mustang 3	Stetson
Bingo	Focus	Olympic Gold	Tarheel
Bravo	Grande II	Padre	Titan Ltd
Cayenne	Greenkeeper	Paraiso	Titanium
Chapel Hill	Greystone	Picasso	Tomahawk
Chesapeake	Inferno	Piedmont	Tacer
Constitution	Justice	Pure Gold	Trooper
Chipper	Jaguar 3	Prospect	Turbo
Coronado	Kalahari	Quest	Ultimate
Coyote	Kentucky 31	Rebel Exeda	Watchdog
Davinci	Kitty Hawk	Rebel Sentry	Wolfpack
Dynasty	Kitty Hawk 2000	Regiment II	
Dominion	Lexington	Rembrandt	

Approved Kentucky Bluegrass Cultivars:

Alpine	Bariris	Envicta	Rugby
Apollo	Bedazzled	Impact	Rugby II
Arcadia	Bordeaux	Kenblue	Showcase
Arrow	Champagne	Midnight	Sonoma
Award	Chicago II	Midnight II	

Approved Hard Fescue Cultivars:

Chariot	Nordic	Rhino	Warwick
Firefly	Oxford	Scaldis II	
Heron	Reliant II	Spartan II	
Minotaur	Reliant IV	Stonehenge	

On cut and fill slopes 2:1 or steeper add 20# Sericea Lespedeza January 1 - December 31.

Fertilizer shall be 10-20-20 analysis. A different analysis of fertilizer may be used provided the 1-2-2 ratio is maintained and the rate of application adjusted to provide the same amount of plant food as a 10-20-20 analysis and as directed.

Native Grass Seeding And Mulching **(West)**

Native Grass Seeding and Mulching shall be performed on the disturbed areas of wetlands and riparian areas, and adjacent to Stream Relocation and/or trout stream construction within a 50 foot zone on both sides of the stream or depression, measured from top of stream bank or center of depression. The stream bank of the stream relocation shall be seeded by a method that does not alter the typical cross section of the stream bank. Native Grass Seeding and Mulching shall also be performed in the permanent soil reinforcement mat section of preformed scour holes, and in other areas as directed.

The kinds of seed and fertilizer, and the rates of application of seed, fertilizer, and limestone, shall be as stated below. During periods of overlapping dates, the kind of seed to be used shall be determined. All rates are in pounds per acre.

August 1 - June 1		**May 1 – September 1**	
18#	Creeping Red Fescue	18#	Creeping Red Fescue
8#	Big Bluestem	8#	Big Bluestem
6#	Indiangrass	6#	Indiangrass
4#	Switchgrass	4#	Switchgrass
35#	Rye Grain	25#	German or Browntop Millet
500#	Fertilizer	500#	Fertilizer
4000#	Limestone	4000#	Limestone

Approved Creeping Red Fescue Cultivars:

Aberdeen	Boreal	Epic	Cindy Lou

Fertilizer shall be 10-20-20 analysis. A different analysis of fertilizer may be used provided the 1-2-2 ratio is maintained and the rate of application adjusted to provide the same amount of plant food as a 10-20-20 analysis and as directed.

Native Grass Seeding and Mulching shall be performed in accordance with Section 1660 of the *Standard Specifications* and vegetative cover sufficient to restrain erosion shall be installed immediately following grade establishment.

Measurement and Payment

Native Grass *Seeding and Mulching* will be measured and paid for in accordance with Article 1660-8 of the *Standard Specifications*.

TEMPORARY SEEDING:

Fertilizer shall be the same analysis as specified for *Seeding and Mulching* and applied at the rate of 400 pounds and seeded at the rate of 50 pounds per acre. German Millet, or Browntop Millet shall be used in summer months and rye grain during the remainder of the year. The Engineer will determine the exact dates for using each kind of seed.

FERTILIZER TOPDRESSING:

Fertilizer used for topdressing shall be 16-8-8 grade and shall be applied at the rate of 500 pounds per acre. A different analysis of fertilizer may be used provided the 2-1-1 ratio is maintained and the rate of application adjusted to provide the same amount of plant food as 16-8-8 analysis and as directed.

SUPPLEMENTAL SEEDING:

The kinds of seed and proportions shall be the same as specified for *Seeding and Mulching*, and the rate of application may vary from 25# to 75# per acre. The actual rate per acre will be determined prior to the time of topdressing and the Contractor will be notified in writing of the rate per acre, total quantity needed, and areas on which to apply the supplemental seed. Minimum tillage equipment, consisting of a sod seeder shall be used for incorporating seed into the soil as to prevent disturbance of existing vegetation. A clodbuster (ball and chain) may be used where degree of slope prevents the use of a sod seeder.

MOWING:

The minimum mowing height on this project shall be six inches.

LAWN TYPE APPEARANCE:

All areas adjacent to lawns must be hand finished as directed to give a lawn type appearance. Remove all trash, debris, and stones ¾" and larger in diameter or other obstructions that could interfere with providing a smooth lawn type appearance. These areas shall be reseeded to match their original vegetative conditions, unless directed otherwise by the Field Operations Engineer.

RESPONSE FOR EROSION CONTROL:

Description

Furnish the labor, materials, tools and equipment necessary to move personnel, equipment, and supplies to the project necessary for the pursuit of any or all of the following work as shown herein, by an approved subcontractor.

Section	Erosion Control Item	Unit
1605	Temporary Silt Fence	LF
1606	Special Sediment Control Fence	LF/TON
1615	Temporary Mulching	ACR
1620	Seed - Temporary Seeding	LB
1620	Fertilizer - Temporary Seeding	TN

1631	Matting for Erosion Control	SY
SP	Coir Fiber Mat	SY
1640	Coir Fiber Baffles	LF
SP	Permanent Soil Reinforcement Mat	SY
1660	Seeding and Mulching	ACR
1661	Seed - Repair Seeding	LB
1661	Fertilizer - Repair Seeding	TON
1662	Seed - Supplemental Seeding	LB
1665	Fertilizer Topdressing	TON
SP	Safety/Highly Visible Fencing	LF
SP	Response for Erosion Control	EA

Construction Methods

Provide an approved subcontractor who performs an erosion control action as described in the NPDES Inspection Form SPPP30. Each erosion control action may include one or more of the above work items.

Measurement and Payment

Response for Erosion Control will be measured and paid for by counting the actual number of times the subcontractor moves onto the project, including borrow and waste sites, and satisfactorily completes an erosion control action described in Form 1675. The provisions of Article 104-5 of the *Standard Specifications* will not apply to this item of work.

Payment will be made under:

Pay Item	**Pay Unit**
Response for Erosion Control	Each

MINIMIZE REMOVAL OF VEGETATION:

The Contractor shall minimize removal of vegetation at stream banks and disturbed areas within the project limits as directed.

STOCKPILE AREAS:

The Contractor shall install and maintain erosion control devices sufficient to contain sediment around any erodible material stockpile areas as directed.

ACCESS AND HAUL ROADS:

At the end of each working day, the Contractor shall install or re-establish temporary diversions or earth berms across access/haul roads to direct runoff into sediment devices. Silt fence sections that are temporarily removed shall be reinstalled across access/haul roads at the end of each working day.

WASTE AND BORROW SOURCES:

Payment for temporary erosion control measures, except those made necessary by the Contractor's own negligence or for his own convenience, will be paid for at the appropriate contract unit price for the devices or measures utilized in borrow sources and waste areas.

No additional payment will be made for erosion control devices or permanent seeding and mulching in any commercial borrow or waste pit. All erosion and sediment control practices that may be required on a commercial borrow or waste site will be done at the Contractor's expense.

TEMPORARY DIVERSION:

This work consists of installation, maintenance, and cleanout of *Temporary Diversions* in accordance with Section 1630 of the *Standard Specifications*. The quantity of excavation for installation and cleanout will be measured and paid for as *Silt Excavation* in accordance with Article 1630-4 of the *Standard Specifications*.

CLEAN WATER DIVERSION:

Description

This work consists of installing, maintaining, and removing any and all material required for the construction of clean water diversions. The clean water diversions shall be used to direct water flowing from offsite around/away from specific area(s) of construction.

Materials

Refer to Division 10

Item	Section
Geotextile for Soil Stabilization, Type 4	1056

Construction Methods

The Contractor shall install the clean water diversions in accordance with the details in the plans and at locations indicated in the plans, and as directed. Upon installation, the excavated material shall be immediately stabilized as provided in Section 1620 of the

Standard Specifications. Other stabilization methods may be utilized with prior approval from the Engineer.

Line clean water diversion with geotextile unrolled in the direction of flow and lay smoothly but loosely on soil surface without creases. Bury top of slope geotextile edge in a trench at least 5" deep and tamp securely. Make vertical overlaps a minimum of 18" with upstream geotextile overlapping the downstream geotextile.

Secure geotextile with eleven gauge wire staples shaped into a *u* shape with a length of not less than 6" and a throat not less than 1" in width. Place staples along outer edges and throughout the geotextile a maximum of 3 ft. horizontally and vertically.

Measurement and Payment

Silt Excavation will be measured and paid for in accordance with Article 1630-4 of the *Standard Specifications*.

Geotextile for Soil Stabilization will be measured and paid for in accordance with Article 270-4 of the *Standard Specifications*.

Stabilization of the excavated material will be paid for as *Temporary Seeding* as provided in Section 1620 of the *Standard Specifications*.

Such price and payment shall be considered full compensation for all work covered by this section including all materials, construction, maintenance, and removal of the clean water diversions.

SAFETY FENCE AND JURISDICTIONAL FLAGGING:

Description

Safety Fence shall consist of furnishing materials, installing and maintaining polyethylene or polypropylene fence along the outside riparian buffer, wetland, or water boundary, or other boundaries located within the construction corridor to mark the areas that have been approved to infringe within the buffer, wetland, endangered vegetation, culturally sensitive areas or water. The fence shall be installed prior to any land disturbing activities.

Interior boundaries for jurisdictional areas noted above shall be delineated by stakes and highly visible flagging.

Jurisdictional boundaries at staging areas, waste sites, or borrow pits, whether considered outside or interior boundaries shall be delineated by stakes and highly visible flagging.

Materials

(A) Safety Fencing

Polyethylene or polypropylene fence shall be a highly visible preconstructed safety fence approved by the Engineer. The fence material shall have an ultraviolet coating.

Either wood posts or steel posts may be used. Wood posts shall be hardwood with a wedge or pencil tip at one end, and shall be at least 5 ft. in length with a minimum nominal 2" x 2" cross section. Steel posts shall be at least 5 ft. in length, and have a minimum weight of 0.85 lb/ft of length.

(B) Boundary Flagging

Wooden stakes shall be 4 feet in length with a minimum nominal 3/4" x 1-3/4" cross section. The flagging shall be at least 1" in width. The flagging material shall be vinyl and shall be orange in color and highly visible.

Construction Methods

No additional clearing and grubbing is anticipated for the installation of this fence. The fence shall be erected to conform to the general contour of the ground.

(A) Safety Fencing

Posts shall be set at a maximum spacing of 10 ft., maintained in a vertical position and hand set or set with a post driver. If hand set, all backfill material shall be thoroughly tamped. Wood posts may be sharpened to a dull point if power driven. Posts damaged by power driving shall be removed and replaced prior to final acceptance. The tops of all wood posts shall be cut at a 30-degree angle. The wood posts may, at the option of the Contractor, be cut at this angle either before or after the posts are erected.

The fence geotextile shall be attached to the wood posts with one 2" galvanized wire staple across each cable or to the steel posts with wire or other acceptable means.

Place construction stakes to establish the location of the safety fence in accordance with Article 105-9 or Article 801-1 of the *Standard Specifications.* No direct pay will be made for the staking of the safety fence. All stakeouts for safety fence shall be considered incidental to the work being paid for as "Construction Surveying", except that where there is no pay item for construction surveying, all safety fence stakeout will be performed by state forces.

The Contractor shall be required to maintain the safety fence in a satisfactory condition for the duration of the project as determined by the Engineer.

(B) Boundary Flagging

Boundary flagging delineation of interior boundaries shall consist of wooden stakes on 25 feet maximum intervals with highly visible orange flagging attached. Stakes shall be installed a minimum of 6" into the ground. Interior boundaries may be staked on a tangent that runs parallel to buffer but must not encroach on the buffer at any location. Interior boundaries of hand clearing shall be identified with a different colored flagging to distinguish it from mechanized clearing.

Boundary flagging delineation of interior boundaries will be placed in accordance with Article 105-9 or Article 801-1 of the *Standard Specifications*. No direct pay will be made for delineation of the interior boundaries. This delineation will be considered incidental to the work being paid for as *Construction Surveying,* except that where there is no pay item or construction surveying the cost of boundary flagging delineation shall be included in the unit prices bid for the various items in the contract. Installation for delineation of all jurisdictional boundaries at staging areas, waste sites, or borrow pits shall consist of wooden stakes on 25 feet maximum intervals with highly visible orange flagging attached. Stakes shall be installed a minimum of 6" into the ground. Additional flagging may be placed on overhanging vegetation to enhance visibility but does not substitute for installation of stakes.

Installation of boundary flagging for delineation of all jurisdictional boundaries at staging areas, waste sites, or borrow pits shall be performed in accordance with Subarticle 230-4(B)(3)(d) or Subarticle 802-2(F) of the *Standard Specifications*. No direct pay will be made for this delineation, as the cost of same shall be included in the unit prices bid for the various items in the contract.

The Contractor shall be required to maintain alternative stakes and highly visible flagging in a satisfactory condition for the duration of the project as determined by the Engineer.

Measurement and Payment

Safety Fence will be measured and paid as the actual number of linear feet of polyethylene or polypropylene fence installed in place and accepted. Such payment will be full compensation including but not limited to furnishing and installing fence geotextile with necessary posts and post bracing, staples, tie wires, tools, equipment and incidentals necessary to complete this work.

Payment will be made under:

Pay Item	**Pay Unit**
Safety Fence	Linear Foot

PERMANENT SOIL REINFORCEMENT MAT:

Description

This work consists of furnishing and placing *Permanent Soil Reinforcement Mat*, of the type specified, over previously prepared areas as directed.

Materials

The product shall be a permanent erosion control reinforcement mat and shall be constructed of synthetic or a combination of coconut and synthetic fibers evenly distributed throughout the mat between a bottom UV stabilized netting and a heavy duty UV stabilized top net. The matting shall be stitched together with UV stabilized polypropylene thread to form a permanent three-dimensional structure. The mat shall have the following minimum physical properties:

Property	Test Method	Value	Unit
Light Penetration	ASTM D6567	9	%
Thickness	ASTM D6525	0.40	in
Mass Per Unit Area	ASTM D6566	0.55	lb/sy
Tensile Strength	ASTM D6818	385	lb/ft
Elongation (Maximum)	ASTM D6818	49	%
Resiliency	ASTM D1777	>70	%
UV Stability *	ASTM D4355	≥80	%
Porosity (Permanent Net)	ECTC Guidelines	≥85	%
Maximum Permissible Shear Stress (Vegetated)	Performance Bench Test	≥8.0	lb/ft^2
Maximum Allowable Velocity (Vegetated)	Performance Bench Test	≥16.0	ft/s

*ASTM D1682 Tensile Strength and % strength retention of material after 1000 hours of exposure.

Submit a certification (Type 1, 2, or 3) from the manufacturer showing:

(A) the chemical and physical properties of the mat used, and
(B) conformance of the mat with this specification.

Construction Methods

Matting shall be installed in accordance with Subarticle 1631-3(B) of the *Standard Specifications*.

All areas to be protected with the mat shall be brought to final grade and seeded in accordance with Section 1660 of the *Standard Specifications*. The surface of the soil shall be smooth, firm, stable and free of rocks, clods, roots or other obstructions that

would prevent the mat from lying in direct contact with the soil surface. Areas where the mat is to be placed will not need to be mulched.

Measurement and Payment

Permanent Soil Reinforcement Mat will be measured and paid for as the actual number of square yards measured along the surface of the ground over which Permanent Soil Reinforcement Mat is installed and accepted. Overlaps will not be included in the measurement, and will be considered as incidental to the work. Such payment shall be full compensation for furnishing and installing the mat, including overlaps, and for all required maintenance.

Payment will be made under:

Pay Item	Pay Unit
Permanent Soil Reinforcement Mat	Square Yard

SKIMMER BASIN WITH BAFFLES:

Description

Provide a skimmer basin to remove sediment from construction site runoff at locations shown in the erosion control plans. See the Skimmer Basin with Baffles Detail sheet provided in the erosion control plans. Work includes constructing sediment basin, installation of temporary slope drain pipe and coir fiber baffles, furnishing, installation and cleanout of Faircloth Skimmers or other approved equivalent device, providing and placing stone pad on bottom of basin underneath skimmer device, providing and placing a geotextile emergency spillway liner, providing coir fiber mat stabilization for the skimmer outlet, disposing of excess materials, removing temporary slope drain, coir fiber baffles, geotextile liner and skimmer device, backfilling basin area with suitable material and providing proper drainage when basin area is abandoned.

Materials

Item	Section
Stone for Erosion Control, Class B	1042
Geotextile for Soil Stabilization, Type 4	1056
Fertilizer for Temporary Seeding	1060-2
Seed for Temporary Seeding	1060-4
Seeding and Mulching	1060-4
Matting for Erosion Control	1060-8
Staples	1060-8
Coir Fiber Mat	1060-14
Temporary Slope Drain	1622-2
Coir Fiber Baffle	1640

Provide appropriately sized Faircloth skimmer or other approved equivalent device.

Provide Schedule 40 PVC pipe with a length of 6 ft. to attach to the skimmer and the coupling connection to serve as the arm pipe. For skimmer sizes of 2.5 in. and smaller, the arm pipe diameter shall be 1.5 inches. For skimmer sizes of 3 in. and larger, refer to manufacturer recommendation.

Provide 4" diameter Schedule 40 PVC pipe to attach to coupling connection of Faircloth skimmer to serve as the barrel pipe through the earthen dam.

Anchors: Staples, stakes, or reinforcement bars shall be used as anchors.

Wooden Stakes:

Provide hardwood stakes 12"- 24" long with a 2" x 2" nominal square cross section. One end of the stake must be sharpened or beveled to facilitate driving through the coir fiber mat and down into the underlying soil. The other end of the stake needs to have a 1"- 2" long head at the top with a 1"- 2" notch following to catch and secure the coir fiber mat.

Steel Reinforcement Bars:

Provide uncoated #10 steel reinforcement bars 24" nominal length. The bars shall have a 4" diameter bend at one end with a 4" straight section at the tip to catch and secure the coir fiber mat.

Staples:

Provide staples made of 0.125" diameter new steel wire formed into a *u* shape not less than 12" in length with a throat of 1" in width.

Construction Methods

Excavate basin according to the erosion control plans with basin surface free of obstructions, debris, and pockets of low-density material. Install temporary slope drain pipe and construct the emergency spillway according to the Skimmer Basin with Baffles Detail sheet in the erosion control plans. Temporary slope drain pipe at inlet of basin may be replaced by geotextile as directed. Construct the coir fiber baffles according to *Roadway Standard Drawings* No. 1640.01 and Section 1640 of the *Standard Specifications*.

Install Faircloth skimmer or other approved equivalent device according to manufacturer recommendations. Install 4" Schedule 40 PVC pipe into dam on the lower side of basin 1 ft. from the bottom of the basin and according to the detail, and extend the pipe so the basin will drain. Attach a 6 ft. arm pipe to the coupling connection and Faircloth skimmer according to manufacturer recommendations. Attach the rope included with the skimmer to the tee between the vent socket and the tube inlet, and the other end to a wooden stake or metal post. Clean out skimmer device when it becomes clogged with sediment and/or debris and is unable to float at the top of water in skimmer basin. Take

appropriate measures to avoid ice accumulation in the skimmer device. Construct a stone pad of Class B stone directly underneath the skimmer device at bottom of basin. The pad shall be a minimum of 12" in height, and shall have a minimum cross sectional area of 4 ft. by 4 ft.

Line emergency spillway with geotextile unrolled in the direction of flow and lay smoothly but loosely on soil surface without creases. Bury edges of geotextile in a trench at least 5" deep and tamp firmly. If geotextile for the emergency spillway is not one continuous piece of material, make horizontal overlaps a minimum of 18" with upstream geotextile overlapping the downstream geotextile. Secure geotextile with eleven gauge wire staples shaped into a *u* shape with a length of not less than 12" and a throat not less than 1" in width. Place staples along outer edges and throughout the geotextile a maximum of 3 ft. horizontally and vertically. Geotextile shall be placed to the bottom and across the entire width of the basin according to the Skimmer Basin with Baffles detail. Place sealant inside basin around barrel pipe on top of geotextile with a minimum width of 6 in.

At the skimmer outlet, provide a smooth soil surface free from stones, clods, or debris that will prevent contact of the coir fiber matting with the soil. Unroll the matting and apply without stretching such that it will lie smoothly but loosely on the soil surface. Wooden stakes, reinforcement bars, or staples may be used as anchors in accordance with the details in the plans and as directed. Place anchors across the matting at the ends approximately 1 ft. apart. Place anchors along the outer edges and down the center of the matting 3 ft. apart.

All bare side slope sections of the skimmer basin shall be seeded with a temporary or permanent seed mix as directed and in accordance with Articles 1620-3, 1620-4, 1620-5, 1660-4, 1660-5 and 1660-7 of the *Standard Specifications*. Straw or excelsior matting shall be installed on all bare side slope sections immediately upon the completion of seeding and in accordance with Article 1631-3 of the *Standard Specifications*.

Measurement and Payment

Silt Excavation will be measured and paid for in accordance with Article 1630-4 of the *Standard Specifications*, as calculated from the typical section throughout the length of the basin as shown on the final approved plans.

Geotextile for Soil Stabilization will be measured and paid for in accordance with Article 270-4 of the *Standard Specifications*.

Coir Fiber Baffles will be measured and paid for in accordance with Article 1640-4 of the *Standard Specifications*.

__" *Skimmer* will be measured in units of each. __" *Skimmer* will be measured and paid for as the maximum number of each size skimmer acceptably installed and in use at any one time during the life of the project. Barrel and arm pipe, cleanout, relocation and reinstallation of __" *Skimmer* is considered incidental to the measurement of the quantity

of __" *Skimmer* and no separate payment will be made. No separate payment shall be made if __" *Skimmer*, barrel and/or arm pipe(s) are damaged by ice accumulation.

Coir Fiber Mat will be measured and paid for as the actual number of square yards measured along the surface of the ground over which coir fiber mat is installed and accepted.

Temporary Slope Drain will be measured and paid for in accordance with Article 1622-4 of the *Standard Specifications*.

Stone for Erosion Control, Class __ will be measured and paid for in accordance with Article 1610-4 of the *Standard Specifications*.

Seeding and Mulching will be measured and paid for in accordance with Article 1660-8 of the *Standard Specifications*.

Seed for Temporary Seeding will be measured and paid for in accordance with Article 1620-6 of the *Standard Specifications*.

Fertilizer for Temporary Seeding will be measured and paid for in accordance with Article 1620-6 of the *Standard Specifications*.

Matting for Erosion Control will be measured and paid for in accordance with Article 1631-4 of the *Standard Specifications*.

No measurement will be made for other items or for over excavation or stockpiling.

Payment will be made under:

Pay Item	**Pay Unit**
__" Skimmer	Each
Coir Fiber Mat	Square Yard

WATTLES WITH POLYACRYLAMIDE (PAM):

Description

Wattles are tubular products consisting of excelsior fibers encased in synthetic netting. Wattles are used on slopes or channels to intercept runoff and act as a velocity break. Wattles are to be placed at locations shown on the plans or as directed. Installation shall follow the detail provided in the plans and as directed. Work includes furnishing materials, installation of wattles, matting installation, PAM application, and removing wattles.

Materials

Wattle shall meet the following specifications:

100% Curled Wood (Excelsior) Fibers	
Minimum Diameter	12 in.
Minimum Density	2.5 lb/ft^3 +/- 10%
Net Material	Synthetic
Net Openings	1 in. x 1 in.
Net Configuration	Totally Encased
Minimum Weight	20 lb. +/- 10% per 10 ft. length

Anchors: Stakes shall be used as anchors.

Wooden Stakes:

Provide hardwood stakes a minimum of 2-ft. long with a 2 in. x 2 in. nominal square cross section. One end of the stake must be sharpened or beveled to facilitate driving down into the underlying soil.

Matting shall meet the requirements of Article 1060-8 of the *Standard Specifications*, or shall meet specifications provided elsewhere in this contract.

Provide staples made of 0.125" diameter new steel wire formed into a *u* shape not less than 12" in length with a throat of 1" in width.

Polyacrylamide (PAM) shall be applied in powder form and shall be anionic or neutrally charged. Soil samples shall be obtained in areas where the wattles will be placed, and from offsite material used to construct the roadway, and analyzed for the appropriate PAM flocculant to be utilized with each wattle. The PAM product used shall be listed on the North Carolina Department of Environment and Natural Resources (NCDENR) Division of Water Quality (DWQ) web site as an approved PAM product for use in North Carolina.

Construction Methods

Wattles shall be secured to the soil by wire staples approximately every 1 linear foot and at the end of each section of wattle. A minimum of 4 stakes shall be installed on the downstream side of the wattle with a maximum spacing of 2 linear feet along the wattle, and according to the detail. Install a minimum of 2 stakes on the upstream side of the wattle according to the detail provided in the plans. Stakes shall be driven into the ground a minimum of 10 in. with no more than 2 in. projecting from the top of the wattle. Drive stakes at an angle according to the detail provided in the plans.

Only install wattle(s) to a height in ditch so flow will not wash around wattle and scour ditch slopes and according to the detail provided in the plans and as directed. Overlap adjoining sections of wattles a minimum of 6 in.

Installation of matting shall be in accordance with the detail provided in the plans, and in accordance with Article 1631-3 of the *Standard Specifications*, or in accordance with specifications provided elsewhere in this contract.

Apply PAM over the lower center portion of the wattle where the water is going to flow over at a rate of 2 ounces per wattle, and 1 ounce of PAM on matting on each side of the wattle. PAM applications shall be done during construction activities after every rainfall event that is equal to or exceeds 0.50 in.

The Contractor shall maintain the wattles until the project is accepted or until the wattles are removed, and shall remove and dispose of silt accumulations at the wattles when so directed in accordance with the requirements of Section 1630 of the *Standard Specifications*.

Measurement and Payment

Wattles will be measured and paid for by the actual number of linear feet of wattles which are installed and accepted. Such price and payment will be full compensation for all work covered by this section, including, but not limited to, furnishing all materials, labor, equipment and incidentals necessary to install the *Wattles*.

Matting will be measured and paid for in accordance with Article 1631-4 of the *Standard Specifications*, or in accordance with specifications provided elsewhere in this contract.

Polyacrylamide(PAM) will be measured and paid for by the actual weight in pounds of PAM applied to the wattles. Such price and payment will be full compensation for all work covered by this section, including, but not limited to, furnishing all materials, labor, equipment and incidentals necessary to apply the *Polyacrylamide(PAM)*.

Payment will be made under:

Pay Item	Pay Unit
Polyacrylamide(PAM)	Pound
Wattle	Linear Foot

TEMPORARY ROCK SILT CHECK TYPE A WITH EXCELSIOR MATTING AND POLYACRYLAMIDE (PAM):

Description

Temporary Rock Silt Checks Type A with Excelsior Matting and Polyacrylamide (PAM) are devices utilized in temporary and permanent ditches to reduce runoff velocity and incorporate PAM into the construction runoff to increase settling of sediment particles and reduce turbidity of runoff. Temporary Rock Silt Checks Type A with Excelsior Matting and PAM are to be placed at locations shown on the plans or as directed. Installation shall follow the detail provided in the plans and as directed. Work includes furnishing materials, installation of Temporary Rock Silt Checks Type A, matting

installation, PAM application, and removing Temporary Rock Silt Checks Type A with Excelsior Matting and PAM.

Materials

Structural stone shall be class B stone that meets the requirements of Section 1042 of the *Standard Specifications* for Stone for Erosion Control, Class B.

Sediment control stone shall be #5 or #57 stone, which meets the requirements of Section 1005 of the *Standard Specifications* for these stone sizes.

Matting shall meet the requirements of Excelsior Matting in Subarticle 1060-8(B) of the *Standard Specifications*, or shall meet specifications provided elsewhere in this contract.

Polyacrylamide (PAM) shall be applied in powder form and shall be anionic or neutrally charged. Soil samples shall be obtained in areas where the Temporary Rock Silt Checks Type A with Excelsior Matting and PAM will be placed, and from offsite material used to construct the roadway, and analyzed for the appropriate PAM flocculant to be utilized with each Temporary Rock Silt Check Type A. The PAM product used shall be listed on the North Carolina Department of Environment and Natural Resources (NCDENR) Division of Water Quality (DWQ) web site as an approved PAM product for use in North Carolina.

Construction Methods

Temporary Rock Silt Checks Type A shall be installed in accordance with Subarticle 1633-3(A) of the *Standard Specifications*, Roadway Standard Drawing No. 1633.01 and the detail provided in the plans.

Installation of matting shall be in accordance with the detail provided in the plans, and anchored by placing Class B stone on top of the matting at the upper and lower ends.

Apply PAM at a rate of 3.5 ounces over the center portion of the Temporary Rock Silt Checks Type A and matting where the water is going to flow over. PAM applications shall be done during construction activities and after every rainfall event that is equal to or exceeds 0.50 in.

The Contractor shall maintain the Temporary Rock Silt Checks Type A with Excelsior Matting and PAM until the project is accepted or until the Temporary Rock Silt Checks Type A with Excelsior Matting and PAM are removed, and shall remove and dispose of silt accumulations at the Temporary Rock Silt Checks Type A with Excelsior Matting and PAM when so directed in accordance with the requirements of Section 1630 of the *Standard Specifications*.

Measurement and Payment

Temporary Rock Silt Checks Type A will be measured and paid for in accordance with Article 1633-5 of the *Standard Specifications*, or in accordance with specifications provided elsewhere in this contract.

Matting will be measured and paid for in accordance with Article 1631-4 of the *Standard Specifications*, or in accordance with specifications provided elsewhere in this contract.

Polyacrylamide(PAM) will be measured and paid for by the actual weight in pounds of PAM applied to the Temporary Rock Silt Checks Type A. Such price and payment will be full compensation for all work covered by this section, including, but not limited to, furnishing all materials, labor, equipment and incidentals necessary to apply the *Polyacrylamide(PAM)*.

Payment will be made under:

Pay Item	**Pay Unit**
Polyacrylamide(PAM)	Pound

IMPERVIOUS DIKE:

Description

This work consists of furnishing, installing, maintaining, and removing an *Impervious Dike* for the purpose of diverting normal stream flow around the construction site. The Contractor shall construct an impervious dike in such a manner approved by the Engineer. The impervious dike shall not permit seepage of water into the construction site or contribute to siltation of the stream. The impervious dike shall be constructed of an acceptable material in the locations noted on the plans or as directed.

Materials

Acceptable materials shall include but not be limited to sheet piles, sandbags, and/or the placement of an acceptable size stone lined with polypropylene or other impervious geotextile.

Earth material shall not be used to construct an impervious dike when it is in direct contact with the stream unless vegetation can be established before contact with the stream takes place.

Measurement and Payment

Impervious Dike will be measured and paid as the actual number of linear feet of impervious dike(s) constructed, measured in place from end to end of each separate installation that has been completed and accepted. Such price and payment will be full

compensation for all work including but not limited to furnishing materials, construction, maintenance, and removal of the impervious dike.

Payment will be made under:

Pay Item	**Pay Unit**
Impervious Dike	Linear Foot

88

TIP Number: P-5206A
Peeler Road Extension and Grade Separation at US 29 (S. Main St.), Salisbury, Rowan County

Project Special Provisions
(Version 12.1)
Signals and Intelligent Transportation Systems

Prepared By: D J Darity
30-Jan-13

Contents

1. SIGNAL HEADS 2
1.1. MATERIALS 2
A. General: 2
B. Vehicle Signal Heads: 3
C. Signal Cable: 5
2. CONTROLLERS WITH CABINETS 5
2.1. MATERIALS – TYPE 2070L CONTROLLERS 5
2.2. MATERIALS – GENERAL CABINETS 5
2.3. MATERIALS – TYPE 170E CABINETS 6
A. Type 170 E Cabinets General: 6
B. Type 170 E Cabinet Electrical Requirements: 6
C. Type 170 E Cabinet Physical Requirements: 12
D. Model 2018 Enhanced Conflict Monitor: 13

1. SIGNAL HEADS

1.1. MATERIALS

A. General:

Fabricate vehicle signal head housings and end caps from die-cast aluminum. Provide visor mounting screws, door latches, and hinge pins fabricated from stainless steel. Provide interior screws, fasteners, and metal parts fabricated from stainless steel or corrosion resistant material.

Fabricate tunnel and traditional visors from sheet aluminum.

Paint all surfaces inside and outside of signal housings and doors. Paint outside surfaces of tunnel and traditional visors, messenger cable mounting assemblies, pole and pedestal mounting assemblies, and pedestrian pushbutton housings. Have electrostatically-applied, fused-polyester paint in highway yellow (Federal Standard 595C, Color Chip Number 13538) a minimum of 2.5 to 3.5 mils thick. Do not apply paint to the latching hardware or rigid vehicle signal head mounting brackets for mast-arm attachments.

Have the interior surfaces of tunnel and traditional visors painted an alkyd urea black synthetic baking enamel with a minimum gloss reflectance and meeting the requirements of MIL-E-10169, "Enamel Heat Resisting, Instrument Black."

For light emitting diode (LED) traffic signal modules, provide the following requirements for inclusion on the Department's Qualified Products List for traffic signal equipment.

1. Sample submittal,
2. Third-party independent laboratory testing results for each submitted module with evidence of testing and conformance with all of the Design Qualification Testing specified in section 6.4 of each of the following Institute of Transportation Engineers (ITE) specifications:
   - Vehicle Traffic Control Signal Heads – Light Emitting Diode (LED) Circular Signal Supplement
   - Vehicle Traffic Control Signal Heads – Light Emitting Diode (LED) Vehicle Arrow Traffic Signal Supplement
   - Pedestrian Traffic Control Signal Indications –Light Emitting Diode (LED) Signal Modules.

   (Note: The Department currently recognizes two approved independent testing laboratories. They are Intertek ETL Semko and Light Metrics, Incorporated with Garwood Laboratories. Independent laboratory tests from other laboratories may be considered as part of the QPL submittal at the discretion of the Department,
3. Evidence of conformance with the requirements of these specifications,
4. A manufacturer's warranty statement in accordance with the required warranty, and
5. Submittal of manufacturer's design and production documentation for the model, including but not limited to, electrical schematics, electronic component values, proprietary part numbers, bill of materials, and production electrical and photometric test parameters.
6. Evidence of approval of the product to bear the Intertek ETL Verified product label for LED traffic signal modules.

In addition to meeting the performance requirements for the minimum period of 60 months, provide a written warranty against defects in materials and workmanship for the modules for a period of 60 months after installation of the modules. During the warranty period, the manufacturer

must provide new replacement modules within 45 days of receipt of modules that have failed at no cost to the State. Repaired or refurbished modules may not be used to fulfill the manufacturer's warranty obligations. Provide manufacturer's warranty documentation to the Department during evaluation of product for inclusion on Qualified Products List (QPL).

B. Vehicle Signal Heads:

Comply with the ITE standard "Vehicle Traffic Control Signal Heads". Provide housings with provisions for attaching backplates.

Provide visors that are 10 inches in length for 12-inch vehicle signal heads.

Provide a termination block with one empty terminal for field wiring for each indication plus one empty terminal for the neutral conductor. Have all signal sections wired to the termination block. Provide barriers between the terminals that have terminal screws with a minimum Number 8 thread size and that will accommodate and secure spade lugs sized for a Number 10 terminal screw.

Mount termination blocks in the yellow signal head sections on all in-line vehicle signal heads. Mount the termination block in the red section on five-section vehicle signal heads.

Furnish vehicle signal head interconnecting brackets. Provide one-piece aluminum brackets less than 4.5 inches in height and with no threaded pipe connections. Provide hand holes on the bottom of the brackets to aid in installing wires to the signal heads. Lower brackets that carry no wires and are used only for connecting the bottom signal sections together may be flat in construction.

For messenger cable mounting, provide messenger cable hangers, wire outlet bodies, balance adjusters, bottom caps, wire entrance fitting brackets, and all other hardware necessary to make complete, watertight connections of the vehicle signal heads to the messenger cable. Fabricate mounting assemblies from malleable iron or steel and provide serrated rings made of aluminum. Provide messenger cable hangers and balance adjusters that are galvanized before being painted. Fabricate balance adjuster eyebolt and eyebolt nut from stainless steel or galvanized malleable iron. Provide messenger cable hangers with U-bolt clamps. Fabricate washers, screws, bolts, clevis pins, cotter pins, nuts, and U-bolt clamps from stainless steel.

Provide LED vehicular traffic signal modules (hereafter referred to as modules) that consist of an assembly that uses LEDs as the light source in lieu of an incandescent lamp for use in traffic signal sections. Use LEDs that are aluminum indium gallium phosphorus (AlInGaP) technology for red and yellow indications and indium gallium nitride (InGaN) for green indications. Install the ultra bright type LEDs that are rated for 100,000 hours of continuous operation from -40°F to +165°F. Design modules to have a minimum useful life of 60 months and to meet all parameters of this specification during this period of useful life.

For the modules, provide spade terminals crimped to the lead wires and sized for a #10 screw connection to the existing terminal block in a standard signal head. Do not provide other types of crimped terminals with a spade adapter.

Ensure the power supply is integral to the module assembly. On the back of the module, permanently mark the date of manufacture (month & year) or some other method of identifying date of manufacture.

Tint the red, yellow and green lenses to correspond with the wavelength (chromaticity) of the LED. Transparent tinting films are unacceptable. Provide a lens that is integral to the unit with a smooth outer surface.

1. LED Circular Signal Modules:

Provide modules in the following configurations: 12-inch circular sections. All makes and models of LED modules purchased for use on the State Highway System shall appear on the current NCDOT Traffic Signal Qualified Products List (QPL).

Provide the manufacturer's model number and the product number (assigned by the Department) for each module that appears on the 2012 or most recent Qualified Products List. In addition, provide manufacturer's certification in accordance with Article 106-3 of the *Standard Specifications,* that each module meets or exceeds the ITE "Vehicle Traffic Control Signal Heads – Light Emitting Diode (LED) Circular Signal Supplement" dated June 27, 2005 (hereafter referred to as VTCSH Circular Supplement) and other requirements stated in this specification.

Provide modules that meet the following requirements when tested under the procedures outlined in the VTCSH Circular Supplement:

Module Type	Max. Wattage at 165° F	Nominal Wattage at 77° F
12-inch red circular	17	11
12-inch green circular	15	15

For yellow circular signal modules, provide modules tested under the procedures outlined in the VTCSH Circular Supplement to insure power required at 77° F is 22 Watts or less for the 12-inch circular module.

Note: Use a wattmeter having an accuracy of ±1% to measure the nominal wattage and maximum wattage of a circular traffic signal module. Power may also be derived from voltage, current and power factor measurements.

2. LED Arrow Signal Modules

Provide 12-inch omnidirectional arrow signal modules. All makes and models of LED modules purchased for use on the State Highway System shall appear on the current NCDOT Traffic Signal Qualified Products List (QPL).

Provide the manufacturer's model number and the product number (assigned by the Department) for each module that appears on the 2012 or most recent Qualified Products List. In addition, provide manufacturer's certification in accordance with Article 106-3 of the *Standard Specifications,* that each module meets or exceeds the requirements for 12-inch omnidirectional modules specified in the ITE "Vehicle Traffic Control Signal Heads – Light Emitting Diode (LED) Vehicle Arrow Traffic Signal Supplement" dated July 1, 2007 (hereafter referred to as VTCSH Arrow Supplement) and other requirements stated in this specification.

Provide modules that meet the following requirements when tested under the procedures outlined in the VTCSH Arrow Supplement:

Module Type	Max. Wattage at 165° F	Nominal Wattage at 77° F
12-inch red arrow	12	9
12-inch green arrow	11	11

For yellow arrow signal modules, provide modules tested under the procedures outlined in the VTCSH Arrow Supplement to insure power required at 77° F is 12 Watts or less.

Note: Use a wattmeter having an accuracy of ±1% to measure the nominal wattage and maximum wattage of an arrow traffic signal module. Power may also be derived from voltage, current and power factor measurements.

C. Signal Cable:

Furnish 16-4 and 16-7 signal cable that complies with IMSA specification 20-1 except provide the following conductor insulation colors:

- For 16-4 cable: white, yellow, red, and green
- For 16-7 cable: white, yellow, red, green, yellow with black stripe tracer, red with black stripe tracer, and green with black stripe tracer. Apply continuous stripe tracer on conductor insulation with a longitudinal or spiral pattern.

Provide a ripcord to allow the cable jacket to be opened without using a cutter. IMSA specification 19-1 will not be acceptable. Provide a cable jacket labeled with the IMSA specification number and provide conductors constructed of stranded copper.

2. CONTROLLERS WITH CABINETS

2.1. MATERIALS – TYPE 2070L CONTROLLERS

Conform to CALTRANS *Transportation Electrical Equipment Specifications* (TEES) (dated August 16, 2002, plus Errata 1 dated October 27, 2003 and Errata 2 dated June 08, 2004) except as required herein.

Furnish Model 2070L controllers. Ensure that removal of the CPU module from the controller will place the intersection into flash.

The Department will provide software at the beginning of the burning-in period. Contractor shall give 5 working days notice before needing software. Program software provided by the Department.

Provide model 2070L controllers with the latest version of OS9 operating software and device drivers, composed of the unit chassis and at a minimum the following modules and assemblies:

- MODEL 2070 1B, CPU Module, Single Board
- MODEL 2070-2A, Field I/O Module (FI/O)
- MODEL 2070-3B, Front Panel Module (FP), Display B (8x40)
- MODEL 2070-4A, Power Supply Module, 10 AMP
- MODEL 2070-7A, Async Serial Com Module (9-pin RS-232)

Furnish one additional MODEL 2070-7A, Async Serial Com Module (9-pin RS-232) for all master controller locations.

For each master location and central control center, furnish a U.S. Robotics V.92 or approved equivalent auto-dial/auto-answer external modem to accomplish the interface to the Department-furnished microcomputers. Include all necessary hardware to ensure telecommunications.

2.2. MATERIALS – GENERAL CABINETS

Provide a moisture resistant coating on all circuit boards.

Provide one 20 mm diameter radial lead UL-recognized metal oxide varistor (MOV) between each load switch field terminal and equipment ground. Electrical performance is outlined below.

PROPERTIES OF MOV SURGE PROTECTOR	
Maximum Continuous Applied Voltage at 185° F	150 VAC (RMS) 200 VDC
Maximum Peak 8x20µs Current at 185° F	6500 A
Maximum Energy Rating at 185° F	80 J
Voltage Range 1 mA DC Test at 77° F	212-268 V
Max. Clamping Voltage 8x20µs, 100A at 77° F	395 V
Typical Capacitance (1 MHz) at 77° F	1600 pF

Provide a power line surge protector that is a two-stage device that will allow connection of the radio frequency interference filter between the stages of the device. Ensure that a maximum continuous current is at least 10A at 120V. Ensure that the device can withstand a minimum of 20 peak surge current occurrences at 20,000A for an 8x20 microsecond waveform. Provide a maximum clamp voltage of 395V at 20,000A with a nominal series inductance of 200µh. Ensure that the voltage does not exceed 395V. Provide devices that comply with the following:

Frequency (Hz)	Minimum Insertion Loss (dB)
60	0
10,000	30
50,000	55
100,000	50
500,000	50
2,000,000	60
5,000,000	40
10,000,000	20
20,000,000	25

2.3. MATERIALS – TYPE 170E CABINETS

A. Type 170 E Cabinets General:

Conform to the city of Los Angeles' Specification No. 54-053-08, *Traffic Signal Cabinet Assembly Specification* (dated July 2008), except as required herein.

Furnish model 332 base mounted cabinets configured for 8 vehicle phases, 4 pedestrian phases, and 6 overlaps. When overlaps are required, provide auxiliary output files for the overlaps. Do not reassign load switches to accommodate overlaps unless shown on electrical details.

Provide model 200 load switches, model 222 loop detector sensors, model 252 AC isolators, and model 242 DC isolators according to the electrical details. As a minimum, provide one (1) model 2018 conflict monitor, one (1) model 206L power supply unit, two (2) model 204 flashers, one (1) DC isolator (located in slot I14), and four (4) model 430 flash transfer relays (provide seven (7) model 430 flash transfer relays if auxiliary output file is installed) with each cabinet.

B. Type 170 E Cabinet Electrical Requirements:

Provide a cabinet assembly designed to ensure that upon leaving any cabinet switch or conflict monitor initiated flashing operation, the controller starts up in the programmed start up phases and start up interval.

Furnish two sets of non-fading cabinet wiring diagrams and schematics in a paper envelope or container and placed in the cabinet drawer.

All AC+ power is subject to radio frequency signal suppression.

Provide surge suppression in the cabinet for each type of cabinet device. Provide surge protection for the full capacity of the cabinet input file. Provide surge suppression devices that operate properly over a temperature range of -40° F to +185° F. Ensure the surge suppression devices provide both common and differential modes of protection.

Provide a pluggable power line surge protector that is installed on the back of the PDA (power distribution assembly) chassis to filter and absorb power line noise and switching transients. Ensure the device incorporates LEDs for failure indication and provides a dry relay contact closure for the purpose of remote sensing. Ensure the device meets the following specifications:

Peak Surge Current (Single pulse, 8x20µs).....20,000A
Occurrences (8x20µs waveform).....10 minimum @ 20,000A
Maximum Clamp Voltage.....395VAC
Operating Current.....15 amps
Response Time.....< 5 nanoseconds

Provide a loop surge suppressor for each set of loop terminals in the cabinet. Ensure the device meets the following specifications:

Peak Surge Current (6 times, 8x20µs)
(Differential Mode).....400A
(Common Mode).....1,000A
Occurrences (8x20µs waveform).....500 min @ 200A
Maximum Clamp Voltage
(Differential Mode @400A).....35V
(Common Mode @1,000A).....35V
Response Time.....< 5 nanoseconds
Maximum Capacitance.....35 pF

Provide a data communications surge suppressor for each communications line entering or leaving the cabinet. Ensure the device meets the following specifications:

Peak Surge Current (Single pulse, 8x20µs).....10,000A
Occurrences (8x20µs waveform).....100 min @ 2,000A
Maximum Clamp Voltage.....Rated for equipment protected
Response Time.....< 1 nanosecond
Maximum Capacitance.....1,500 pF
Maximum Series Resistance.....15Ω

Provide a DC signal surge suppressor for each DC input channel in the cabinet. Ensure the device meets the following specifications:

Peak Surge Current (Single pulse, 8x20µs).....10,000A
Occurrences (8x20µs waveform).....100 @ 2,000A
Maximum Clamp Voltage.....30V
Response Time.....< 1 nanosecond

Provide a 120 VAC signal surge suppressor for each AC+ interconnect signal input. Ensure the device meets the following specifications:

Peak Surge Current (Single pulse, 8x20µs).....20,000A
Maximum Clamp Voltage.....350VAC
Response Time.....< 200 nanoseconds
Discharge Voltage.....<200 Volts @ 1,000A
Insulation Resistance.....≥100 MΩ

Provide conductors for surge protection wiring that are of sufficient size (ampacity) to withstand maximum overcurrents which could occur before protective device thresholds are attained and current flow is interrupted.

If additional surge protected power outlets are needed to accommodate fiber transceivers, modems, etc., install a UL listed, industrial, heavy-duty type power outlet strip with a minimum rating of 15 A / 125 VAC, 60 Hz. Provide a strip that has a minimum of 3 grounded outlets. Ensure the power outlet strip plugs into one of the controller unit receptacles located on the rear of the PDA. Ensure power outlet strip is mounted securely; provide strain relief if necessary.

Provide a door switch in the front and a door switch in the rear of the cabinet that will provide the controller unit with a Door Ajar alarm when either the front or the rear door is open. Ensure the door switches apply DC ground to the Input File when either the front door or the rear door is open.

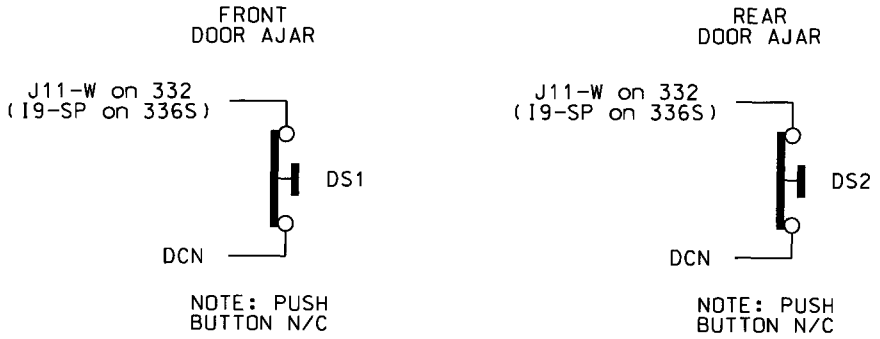

Furnish a fluorescent fixture in the rear across the top of the cabinet and another fluorescent fixture in the front across the top of the cabinet at a minimum. Ensure that the fixtures provide sufficient light to illuminate all terminals, labels, switches, and devices in the cabinet. Conveniently locate the fixtures so as not to interfere with a technician's ability to perform work on any devices or terminals in the cabinet. Provide a protective diffuser to cover exposed bulbs. Install 16 watt T-4

lamps in the fluorescent fixtures. Provide a door switch to provide power to each fixture when the respective door is open. Wire the fluorescent fixtures to the 15 amp ECB (equipment circuit breaker).

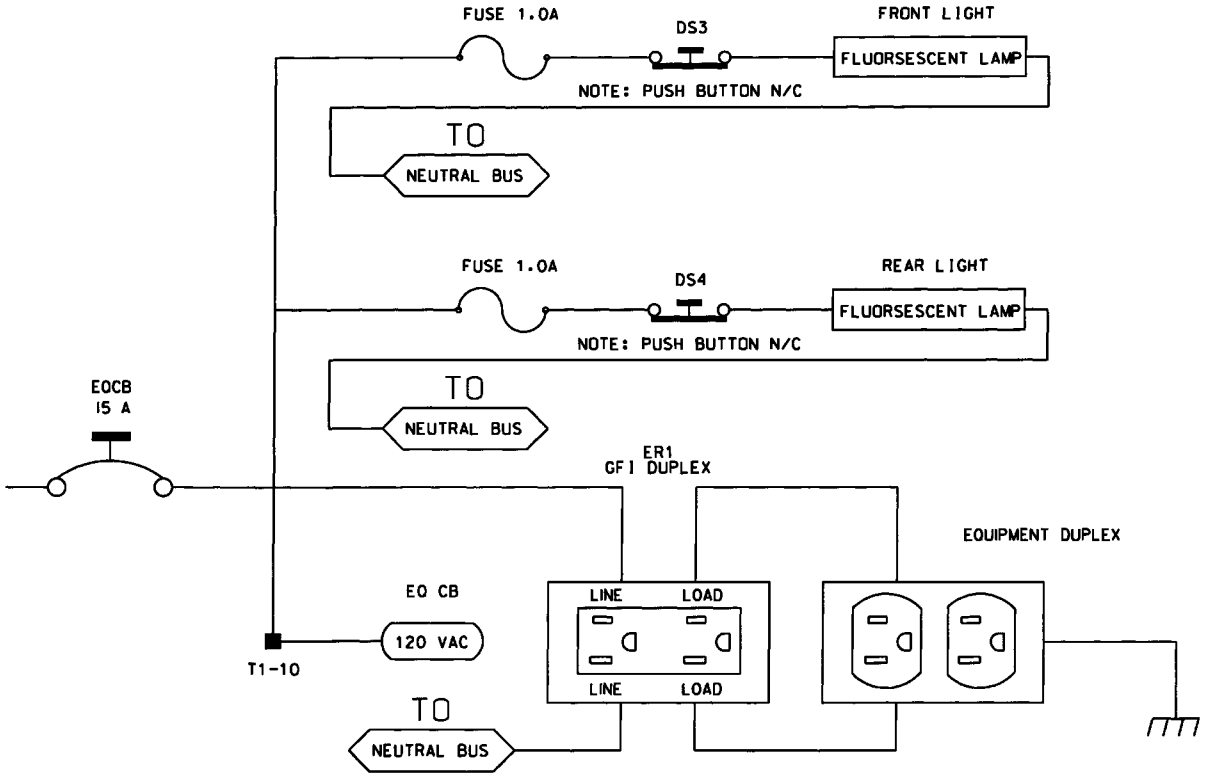

Furnish a police panel with a police panel door. Ensure that the police panel door permits access to the police panel when the main door is closed. Ensure that no rainwater can enter the cabinet even with the police panel door open. Provide a police panel door hinged on the right side as viewed from the front. Provide a police panel door lock that is keyed to a standard police/fire call box key. In addition to the requirements of LA Specification No. 54-053-08, provide the police panel with a toggle switch connected to switch the intersection operation between normal stop-and-go operation (AUTO) and manual operation (MANUAL). Ensure that manual control can be implemented using inputs and software such that the controller provides full programmed clearance times for the yellow clearance and red clearance for each phase while under manual control.

Provide a 1/4-inch locking phone jack in the police panel for a hand control to manually control the intersection. Provide sufficient room in the police panel for storage of a hand control and cord.

For model 332 base mounted cabinets, ensure terminals J14-E and J14-K are wired together on the rear of the Input File. Connect TB9-12 (J14 Common) on the Input Panel to T1-2 (AC-) on the rear of the PDA.

Provide detector test switches mounted at the top of the cabinet rack or other convenient location which may be used to place a call on each of eight phases based on the chart below. Provide three positions for each switch: On (place call), Off (normal detector operation), and Momentary On (place momentary call and return to normal detector operation after switch is released). Ensure that

the switches are located such that the technician can read the controller display and observe the intersection.

Connect detector test switches for cabinets as follows:

332 Cabinet	
Detector Call Switches	**Terminals**
Phase 1	I1-W
Phase 2	I4-W
Phase 3	I5-W
Phase 4	I8-W
Phase 5	J1-W
Phase 6	J4-W
Phase 7	J5-W
Phase 8	J8-W

Provide the PCB 28/56 connector for the conflict monitor unit (CMU) with 28 independent contacts per side, dual-sided with 0.156 inch contact centers. Provide the PCB 28/56 connector contacts with solder eyelet terminations. Ensure all connections to the PCB 28/56 connector are soldered to the solder eyelet terminations.

Ensure that all cabinets have the CMU connector wired according to the 332 cabinet connector pin assignments (include all wires for auxiliary output file connection). Wire pins 13, 16, R, and U of the CMU connector to a separate 4 pin plug, P1, as shown below. Provide a second plug, P2, which will mate with P1 and is wired to the auxiliary output file as shown below. Provide an additional plug, P3, which will mate with P1 and is wired to the pedestrian yellow circuits as shown below. When no auxiliary output file is installed in the cabinet, provide wires for the green and yellow inputs for channels 11, 12, 17, and 18, the red inputs for channels 17 and 18, and the wires for the P2 plug. Terminate the two-foot wires with ring type lugs, insulated, and bundled for optional use.

	P1		P2		P3	
PIN	**FUNCTION**	**CONN TO**	**FUNCTION**	**CONN TO**	**FUNCTION**	**CONN TO**
1	CH-9G	CMU-13	OLA-GRN	A123	2P-YEL	114
2	CH-9Y	CMU-16	OLA-YEL	A122	4P-YEL	105
3	CH-10G	CMU-R	OLB-GRN	A126	6P-YEL	120
4	CH-10Y	CMU-U	OLB-YEL	A125	8P-YEL	111

Connect the P20 terminal assembly (red monitor board) to a connector installed on the front of the type 2018 enhanced conflict monitor through a 3-1/2 foot 20-wire ribbon cable. Ensure that the ribbon cable connector and the connector on the conflict monitor are keyed to ensure proper connection. Ensure that removal of the P20 ribbon cable will cause the conflict monitor to recognize a latching fault condition and place the cabinet into flashing operation.

Wire the P20 connector to the traffic signal red displays to provide inputs to the conflict monitor as shown below. Ensure the pedestrian Don't Walk circuits are wired to channels 13 through 16 of the P20 connector. When no auxiliary output file is installed in the cabinet, provide wires for

channels 9 through 12 reds. Terminate the two-foot wires with ring type lugs, insulated, and bundled for optional use.

Pin #	Function	Pin #	Function
1	Channel 15 Red	11	Channel 9 Red
2	Channel 16 Red	12	Channel 8 Red
3	Channel 14 Red	13	Channel 7 Red
4	GND	14	Channel 6 Red
5	Channel 13 Red	15	Channel 5 Red
6	Special Function 2	16	Channel 4 Red
7	Channel 12 Red	17	Channel 3 Red
8	Special Function 1	18	Channel 2 Red
9	Channel 10 Red	19	Channel 1 Red
10	Channel 11 Red	20	Red Enable

Ensure the controller unit outputs to the auxiliary output file are pre-wired to the C5 connector. When no auxiliary output file is installed in the cabinet, connect the C5 connector to a storage socket located on the Input Panel or on the rear of the PDA.

In addition to the requirements of LA Specification No. 54-053-08, ensure relay K1 on the Power Distribution Assembly (PDA) is a four pole relay and K2 on the PDA is a two pole relay.

Provide a two pole, ganged circuit breaker for the flash bus circuit. Ensure the flash bus circuit breaker is an inverse time circuit breaker rated for 10 amps at 120 VAC with a minimum of 10,000 RMS symmetrical amperes short circuit current rating. Do not provide the auxiliary switch feature on the flash bus circuit breaker. Ensure the ganged flash bus circuit breaker is certified by the circuit breaker manufacturer to provide gang tripping operation.

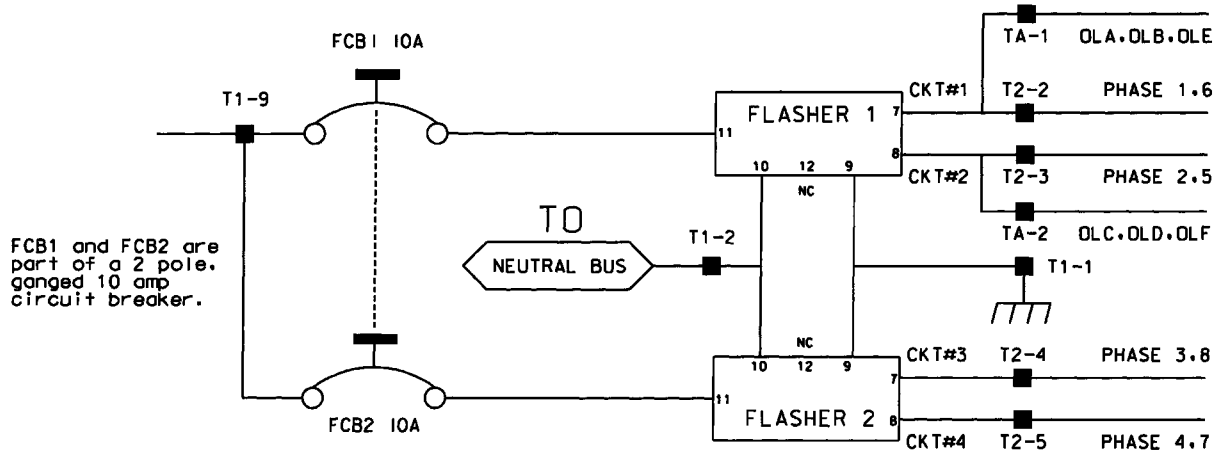

Ensure auxiliary output files are wired as follows:

AUXILIARY OUTPUT FILE TERMINAL BLOCK TA ASSIGNMENTS	
POSITION	**FUNCTION**
1	Flasher Unit #1, Circuit 1/FTR1 (OLA, OLB)/FTR3 (OLE)
2	Flasher Unit #1, Circuit 2/FTR2 (OLC, OLD)/FTR3 (OLF)
3	Flash Transfer Relay Coils
4	AC -
5	Power Circuit 5
6	Power Circuit 5
7	Equipment Ground Bus
8	NC

Provide four spare load resistors mounted in each cabinet. Ensure each load resistor is rated as shown in the table below. Wire one side of each load resistor to AC-. Connect the other side of each resistor to a separate terminal on a four (4) position terminal block. Mount the load resistors and terminal block either inside the back of Output File No. 1 or on the upper area of the Service Panel.

ACCEPTABLE LOAD RESISTOR VALUES	
VALUE (ohms)	**WATTAGE**
1.5K – 1.9 K	25W (min)
2.0K – 3.0K	10W (min)

Provide Model 200 load switches, Model 204 flashers, Model 242 DC isolators, Model 252 AC isolators, and Model 206L power supply units that conform to CALTRANS' "*Transportation Electrical Equipment Specifications*" dated March 12, 2009 with Erratum 1.

C. Type 170 E Cabinet Physical Requirements:

Do not mold, cast, or scribe the name "City of Los Angeles" on the outside of the cabinet door as specified in LA Specification No. 54-053-08. Do not provide a Communications Terminal Panel as specified in LA Specification No. 54-053-08. Do not provide terminal block TBB on the Service Panel. Do not provide Cabinet Verification Test Program software or associated test jigs as specified in LA Specification No. 54-053-08.

Furnish unpainted, natural, aluminum cabinet shells. Ensure that all non-aluminum hardware on the cabinet is stainless steel or a Department approved non-corrosive alternate.

Ensure the lifting eyes, gasket channels, police panel, and all supports welded to the enclosure and doors are fabricated from 0.125 inch minimum thickness aluminum sheet and meet the same standards as the cabinet and doors.

Provide front and rear doors with latching handles that allow padlocking in the closed position. Furnish 0.75 inch minimum diameter stainless steel handles with a minimum 0.5 inch shank. Place the padlocking attachment at 4.0 inches from the handle shank center to clear the lock and key. Provide an additional 4.0 inches minimum gripping length.

Provide Corbin #2 locks on the front and rear doors. Provide one (1) Corbin #2 and one (1) police master key with each cabinet. Ensure main door locks allow removal of keys in the locked position only.

Provide a surge protection panel with 16 loop surge protection devices and designed to allow sufficient free space for wire connection/disconnection and surge protection device replacement. For

model 332 cabinets, provide an additional 20 loop surge protection devices. Provide an additional two AC+ interconnect surge devices to protect one slot and eight DC surge protection devices to protect four slots. Provide no protection devices on slot I14.

For base mounted cabinets, mount surge protection panels on the left side of the cabinet as viewed from the rear. Attach each panel to the cabinet rack assembly using bolts and make it easily removable. Mount the surge protection devices in vertical rows on each panel and connect the devices to one side of 12 position, double row terminal blocks with #8 screws. For each surge protection panel, terminate all grounds from the surge protection devices on a copper equipment ground bus attached to the surge protection panel. Wire the terminals to the rear of a standard input file using spade lugs for input file protection.

Provide permanent labels that indicate the slot and the pins connected to each terminal that may be viewed from the rear cabinet door. Label and orient terminals so that each pair of inputs is next to each other. Indicate on the labeling the input file (I or J), the slot number (1-14) and the terminal pins of the input slots (either D & E for upper or J & K for lower).

Provide a minimum 14 x 16 inch pull out, hinged top shelf located immediately below controller mounting section of the cabinet. Ensure the shelf is designed to fully expose the table surface outside the controller at a height approximately even with the bottom of the controller. Ensure the shelf has a storage bin interior which is a minimum of 1 inch deep and approximately the same dimensions as the shelf. Provide an access to the storage area by lifting the hinged top of the shelf. Fabricate the shelf and slide from aluminum or stainless steel and ensure the assembly can support the 2070L controller plus 15 pounds of additional weight. Ensure shelf has a locking mechanism to secure it in the fully extended position and does not inhibit the removal of the 2070L controller or removal of cards inside the controller when fully extended. Provide a locking mechanism that is easily released when the shelf is to be returned to its non-use position directly under the controller.

D. Model 2018 Enhanced Conflict Monitor:

Furnish Model 2018 Enhanced Conflict Monitors that provide monitoring of 18 channels. Ensure each channel consists of a green, yellow, and red field signal input. Ensure that the conflict monitor meets or exceeds CALTRANS' Transportation Electrical Equipment Specifications dated March 12, 2009 with Erratum 1 (hereafter referred to as CALTRANS' 2009 TEES) for a model 210 monitor unit and other requirements stated in this specification.

Ensure the conflict monitor is provided with an 18 channel conflict programming card. Pin EE and Pin T of the conflict programming card shall be connected together. Pin 16 of the conflict programming card shall be floating. Ensure that the absence of the conflict programming card will cause the conflict monitor to trigger (enter into fault mode), and remain in the triggered state until the programming card is properly inserted and the conflict monitor is reset.

Provide a conflict monitor that incorporates LED indicators into the front panel to dynamically display the status of the monitor under normal conditions and to provide a comprehensive review of field inputs with monitor status under fault conditions. Ensure that the monitor indicates the channels that were active during a conflict condition and the channels that experienced a failure for all other per channel fault conditions detected. Ensure that these indications and the status of each channel are retained until the Conflict Monitor is reset. Furnish LED indicators for the following:

- AC Power (Green LED indicator)
- VDC Failed (Red LED indicator)
- WDT Error (Red LED indicator)

- Conflict (Red LED indicator)
- Red Fail (Red LED indicator)
- Dual Indication (Red LED indicator)
- Yellow/Clearance Failure (Red LED indicator)
- PCA/PC Ajar (Red LED indicator)
- Monitor Fail/Diagnostic Failure (Red LED indicator)
- 54 Channel Status Indicators (1 Red, 1 Yellow, and 1 Green LED indicator for each of the 18 channels)

Provide a switch to set the Red Fail fault timing. Ensure that when the switch is in the ON position the Red Fail fault timing value is set to 1350 +/- 150ms (2018 mode). Ensure that when the switch is in the OFF position the Red Fail fault timing value is set to 850 +/- 150ms (210 mode).

Provide a switch to set the Watchdog fault timing. Ensure that when the switch is in the ON position the Watchdog fault timing value is set to 1.0 +/- 0.1s (2018 mode). Ensure that when the switch is in the OFF position the Watchdog fault timing value is set to 1.5 +/- 0.1s (210 mode).

Provide a jumper or switch to set the AC line brown-out levels. Ensure that when the jumper is present or the switch is in the ON position the AC line dropout voltage threshold is 98 +/- 2 Vrms, the AC line restore voltage threshold is 103 +/- 2 Vrms, and the AC line brown-out timing value is set to 400 +/- 50ms (2018 mode). Ensure that when the jumper is not present or the switch is in the OFF position the AC line dropout voltage threshold is 92 +/- 2 Vrms, the AC line restore voltage threshold is 98 +/- 2 Vrms, and the AC line brown-out timing value is set to 80 +/- 17ms (210 mode).

Provide a jumper or switch that will enable and disable the Watchdog Latch function. Ensure that when the jumper is not present or the switch is in the OFF position the Watchdog Latch function is disabled. In this mode of operation, a Watchdog fault will be reset following a power loss, brownout, or power interruption. Ensure that when the jumper is present or the switch is in the ON position the Watchdog Latch function is enabled. In this mode of operation, a Watchdog fault will be retained until a Reset command is issued.

Provide a jumper that will reverse the active polarity for pin #EE (output relay common). Ensure that when the jumper is not present pin #EE (output relay common) will be considered 'Active' at a voltage greater than 70 Vrms and 'Not Active' at a voltage less than 50 Vrms (Caltrans mode). Ensure that when the jumper is present pin #EE (output relay common) will be considered 'Active' at a voltage less than 50 Vrms and 'Not Active' at a voltage greater than 70 Vrms (Failsafe mode).

In addition to the connectors required by CALTRANS' 2009 TEES, provide the conflict monitor with a red interface connector mounted on the front of the monitor. Ensure the connector is a 20 pin, right angle, male connector with latching clip locks and polarizing keys. Ensure the right angle solder tails are designed for a 0.062" thick printed circuit board. Keying of the connector shall be between pins 3 and 5, and between 17 and 19. Ensure the connector has two rows of pins with the odd numbered pins on one row and the even pins on the other row. Ensure the connector pin row spacing is 0.10" and pitch is 0.10". Ensure the mating length of the connector pins is 0.24". Ensure the pins are finished with gold plating 30μ" thick.

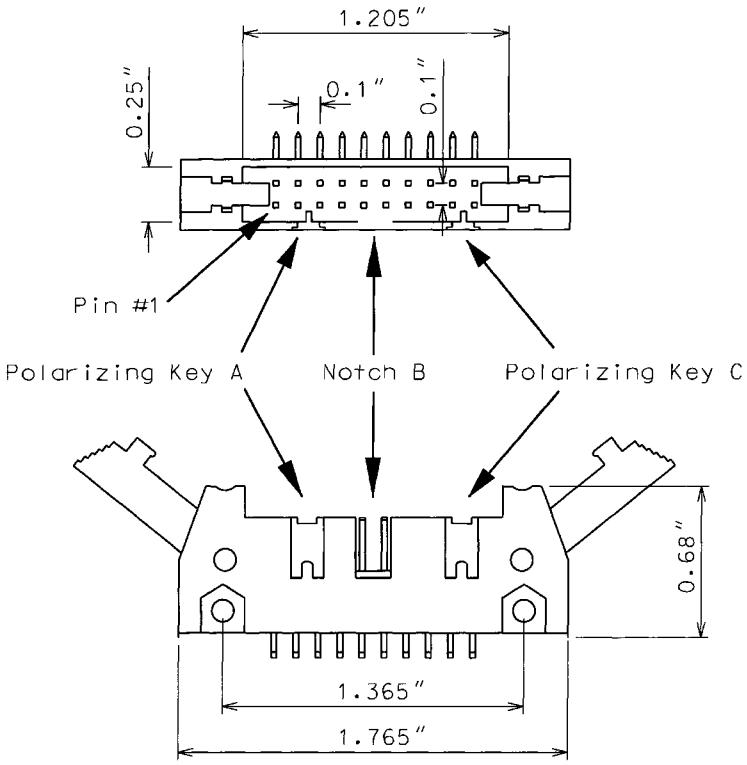

Ensure the red interface connector pins on the monitor have the following functions:

Pin #	Function	Pin #	Function
1	Channel 15 Red	2	Channel 16 Red
3	Channel 14 Red	4	Chassis Ground
5	Channel 13 Red	6	Special Function 2
7	Channel 12 Red	8	Special Function 1
9	Channel 10 Red	10	Channel 11 Red
11	Channel 9 Red	12	Channel 8 Red
13	Channel 7 Red	14	Channel 6 Red
15	Channel 5 Red	16	Channel 4 Red
17	Channel 3 Red	18	Channel 2 Red
19	Channel 1 Red	20	Red Enable

Ensure that the removal of the P-20 red interface ribbon cable will cause the monitor to recognize a latching fault condition and place the cabinet into flashing operation.

Provide Special Function 1 and Special Function 2 inputs to the unit which shall disable only Red Fail Monitoring when either input is sensed active. A Special Function input shall be sensed active when the input voltage exceeds 70 Vrms with a minimum duration of 550 ms. A Special Function input shall be sensed not active when the input voltage is less than 50 Vrms or the duration is less than 250 ms. A Special Function input is undefined by these specifications and may or may not be sensed active when the input voltage is between 50 Vrms and 70 Vrms or the duration is between 250 ms and 550 ms.

Ensure the conflict monitor recognizes field signal inputs for each channel that meet the following requirements:

- consider a Red input greater than 70 Vrms and with a duration of at least 500 ms as an "on" condition;
- consider a Red input less than 50 Vrms or with a duration of less than 200 ms as an "off" condition (no valid signal);
- consider a Red input between 50 Vrms and 70 Vrms or with a duration between 200 ms and 500 ms to be undefined by these specifications;
- consider a Green or Yellow input greater than 25 Vrms and with a duration of at least 500 ms as an "on" condition;
- consider a Green or Yellow input less than 15 Vrms or with a duration of less than 200 ms as an "off" condition; and
- consider a Green or Yellow input between 15 Vrms and 25 Vrms or with a duration between 200 ms and 500 ms to be undefined by these specifications.

Provide a conflict monitor that recognizes the faults specified by CALTRANS' 2009 TEES and the following additional faults. Ensure the conflict monitor will trigger upon detection of a fault and will remain in the triggered (in fault mode) state until the unit is reset at the front panel or through the external remote reset input for the following failures:

1. **Red Monitoring or Absence of Any Indication (Red Failure):** A condition in which no "on" voltage signal is detected on any of the green, yellow, or red inputs to a given monitor channel. If a signal is not detected on at least one input (R, Y, or G) of a conflict monitor channel for a period greater than 1000 ms when used with a 170 controller and 1500 ms when used with a 2070L controller, ensure monitor will trigger and put the intersection into flash. If the absence of any indication condition lasts less that 750 ms when used with a 170 controller and 1200 ms when used with a 2070L controller, ensure conflict monitor will not trigger. Red fail monitoring shall be enabled on a per channel basis by the use of switches located on the conflict monitor. Have red monitoring occur when all of the following input conditions are in effect:

   a) Red Enable input to monitor is active (Red Enable voltages are "on" at greater than 70 Vrms, off at less than 50 Vrms, undefined between 50 and 70 Vrms), and

   b) Neither Special Function 1 nor Special Function 2 inputs are active.

   c) Pin #EE (output relay common) is not active

2. **Short/Missing Yellow Indication Fault (Clearance Error):** Yellow indication following a green is missing or shorter than 2.7 seconds (with ± 0.1-second accuracy). If a channel fails to detect an "on" signal at the Yellow input for a minimum of 2.7 seconds (± 0.1 second) following the detection of an "on" signal at a Green input for that channel, ensure that the monitor triggers and generates a clearance/short yellow error fault indication. Short/missing yellow (clearance) monitoring shall be enabled on a per channel basis by the use of switches located on the conflict monitor. This fault shall not occur when the channel is programmed for Yellow Inhibit, when the Red Enable signal is inactive or pin #EE (output relay common) is active.
3. **Dual Indications on the Same Channel:** In this condition, more than one indication (R,Y,G) is detected as "on" at the same time on the same channel. If dual indications are detected for a period greater than 500 ms, ensure that the conflict monitor triggers and displays the proper failure indication (Dual Ind fault). If this condition is detected for less

than 200 ms, ensure that the monitor does not trigger. G-Y-R dual indication monitoring shall be enabled on a per channel basis by the use of switches located on the conflict monitor. G-Y dual indication monitoring shall be enabled for all channels by use of a switch located on the conflict monitor. This fault shall not occur when the Red Enable signal is inactive or pin #EE (output relay common) is active.

4. **Configuration Settings Change:** The configuration settings are comprised of (as a minimum) the permissive diode matrix, dual indication switches, yellow disable jumpers, any option switches, any option jumpers, and the Watchdog Enable switch. Ensure the conflict monitor compares the current configuration settings with the previous stored configuration settings on power-up, on reset, and periodically during operation. If any of the configuration settings are changed, ensure that the conflict monitor triggers and causes the program card indicator to flash. Ensure that configuration change faults are only reset by depressing and holding the front panel reset button for a minimum of three seconds. Ensure the external remote reset input does not reset configuration change faults.

Ensure the conflict monitor will trigger and the AC Power indicator will flash at a rate of 2 Hz ± 20% with a 50% duty cycle when the AC Line voltage falls below the "drop-out" level. Ensure the conflict monitor will resume normal operation when the AC Line voltage returns above the "restore" level. Ensure the AC Power indicator will remain illuminated when the AC voltage returns above the "restore" level. Should an AC Line power interruption occur while the monitor is in the fault mode, then upon restoration of AC Line power, the monitor will remain in the fault mode and the correct fault and channel indicators will be displayed.

Provide a flash interval of at least 6 seconds and at most 10 seconds in duration following a power-up, an AC Line interruption, or a brownout restore. Ensure the conflict monitor will suspend all fault monitoring functions, close the Output relay contacts, and flash the AC indicator at a rate of 4 Hz ± 20% with a 50% duty cycle during this interval. Ensure the termination of the flash interval after at least 6 seconds if the Watchdog input has made 5 transitions between the True and False state and the AC Line voltage is greater than the "restore" level. If the watchdog input has not made 5 transitions between the True and False state within 10 ± 0.5 seconds, the monitor shall enter a WDT error fault condition.

Ensure the conflict monitor will monitor an intersection with a minimum of four approaches using the four-section Flashing Yellow Arrow (FYA) vehicle traffic signal as outlined by the NCHRP 3-54 research project for protected-permissive left turn signal displays. Ensure the conflict monitor will operate in the FYA mode and FYAc (Compact) mode as specified below to monitor each channel for the following fault conditions: Conflict, Red Fail, Dual Indication, and Clearance. Provide a switch to select between the FYA mode and FYAc mode. Provide a switch to select each FYA phase movement for monitoring.

FYA mode

FYA Signal Head	Phase 1	Phase 3	Phase 5	Phase 7
Red Arrow	Channel 9 Red	Channel 10 Red	Channel 11 Red	Channel 12 Red
Yellow Arrow	Channel 9 Yellow	Channel 10 Yellow	Channel 11 Yellow	Channel 12 Yellow
Flashing Yellow Arrow	Channel 9 Green	Channel 10 Green	Channel 11 Green	Channel 12 Green
Green Arrow	Channel 1 Green	Channel 3 Green	Channel 5 Green	Channel 7 Green

FYAc mode

FYA Signal Head	Phase 1	Phase 3	Phase 5	Phase 7
Red Arrow	Channel 1 Red	Channel 3 Red	Channel 5 Red	Channel 7 Red
Yellow Arrow	Channel 1 Yellow	Channel 3 Yellow	Channel 5 Yellow	Channel 7 Yellow
Flashing Yellow Arrow	Channel 1 Green	Channel 3 Green	Channel 5 Green	Channel 7 Green
Green Arrow	Channel 9 Green	Channel 9 Yellow	Channel 10 Green	Channel 10 Yellow

Ensure that the conflict monitor will log at least nine of the most recent events detected by the monitor in non-volatile EEPROM memory (or equivalent). For each event, record at a minimum the time, date, type of event, status of each field signal indication with RMS voltage, and specific channels involved with the event. Ensure the conflict monitor will log the following events: monitor reset, configuration, previous fault, and AC line. Furnish the signal sequence log that shows all channel states (Greens, Yellows, and Reds) and the Red Enable State for a minimum of 2 seconds prior to the current fault trigger point. Ensure the display resolution of the inputs for the signal sequence log is not greater than 50 ms.

Provide a RS-232C/D compliant port (DB-9 female connector) on the front panel of the conflict monitor in order to provide communications from the conflict monitor to the 170/2070L controller or to a Department-furnished laptop computer. Electrically isolate the port interface electronics from all monitor electronics, excluding Chassis Ground. Ensure that the controller can receive all event log information through a controller Asynchronous Communications Interface Adapter (Type 170E) or Async Serial Comm Module (2070L). Provide a Windows based graphic user interface software to communicate directly through the same monitor RS-232C/D compliant port to retrieve and view all event log information to a Department-furnished laptop computer. The RS-232C/D compliant port on the monitor shall allow the monitor to function as a DCE device with pin connections as follows:

Conflict Monitor RS-232C/D (DB-9 Female) Pinout		
Pin Number	**Function**	**I/O**
1	DCD	O
2	TX Data	O
3	RX Data	I
4	DTR	I
5	Ground	-
6	DSR	O
7	CTS	I
8	RTS	O
9	NC	-

MONITOR BOARD EDGE CONNECTOR

Pin #	Function (Back Side)	Pin #	Function (Component Side)
1	Channel 2 Green	A	Channel 2 Yellow
2	Channel 13 Green	B	Channel 6 Green
3	Channel 6 Yellow	C	Channel 15 Green
4	Channel 4 Green	D	Channel 4 Yellow
5	Channel 14 Green	E	Channel 8 Green
6	Channel 8 Yellow	F	Channel 16 Green
7	Channel 5 Green	H	Channel 5 Yellow
8	Channel 13 Yellow	J	Channel 1 Green
9	Channel 1 Yellow	K	Channel 15 Yellow
10	Channel 7 Green	L	Channel 7 Yellow
11	Channel 14 Yellow	M	Channel 3 Green
12	Channel 3 Yellow	N	Channel 16 Yellow
13	Channel 9 Green	P	Channel 17 Yellow
14	Channel 17 Green	R	Channel 10 Green
15	Channel 11 Yellow	S	Channel 11 Green
16	Channel 9 Yellow	T	Channel 18 Yellow
17	Channel 18 Green	U	Channel 10 Yellow
--		--	
18	Channel 12 Yellow	V	Channel 12 Green
19	Channel 17 Red	W	Channel 18 Red
20	Chassis Ground	X	Not Assigned
21	AC-	Y	DC Common
22	Watchdog Timer	Z	External Test Reset
23	+24VDC	AA	+24VDC
24	Tied to Pin 25	BB	Stop Time (Output)
25	Tied to Pin 24	CC	Not Assigned
26	Not Assigned	DD	Not Assigned
27	Relay Output, Side #3, N.O.	EE	Relay Output,Side #2,Common
28	Relay Output, Side #1, N.C.	FF	AC+

-- Slotted for keying between Pins 17/U and 18/V

CONFLICT PROGRAM CARD PIN ASSIGNMENTS

Pin #	Function (Back Side)	Pin #	Function (Component Side)
1	Channel 2 Green	A	Channel 1 Green
2	Channel 3 Green	B	Channel 2 Green
3	Channel 4 Green	C	Channel 3 Green
4	Channel 5 Green	D	Channel 4 Green
5	Channel 6 Green	E	Channel 5 Green
6	Channel 7 Green	F	Channel 6 Green
7	Channel 8 Green	H	Channel 7 Green
8	Channel 9 Green	J	Channel 8 Green
9	Channel 10 Green	K	Channel 9 Green
10	Channel 11 Green	L	Channel 10 Green
11	Channel 12 Green	M	Channel 11 Green
12	Channel 13 Green	N	Channel 12 Green
13	Channel 14 Green	P	Channel 13 Green
14	Channel 15 Green	R	Channel 14 Green
15	Channel 16 Green	S	Channel 15 Green
16	N/C	T	PC AJAR
17	Channel 1 Yellow	U	Channel 9 Yellow
18	Channel 2 Yellow	V	Channel 10 Yellow
19	Channel 3 Yellow	W	Channel 11 Yellow
20	Channel 4 Yellow	X	Channel 12 Yellow
21	Channel 5 Yellow	Y	Channel 13 Yellow
22	Channel 6 Yellow	Z	Channel 14 Yellow
23	Channel 7 Yellow	AA	Channel 15 Yellow
24	Channel 8 Yellow	BB	Channel 16 Yellow
--		--	
25	Channel 17 Green	CC	Channel 17 Yellow
26	Channel 18 Green	DD	Channel 18 Yellow
27	Channel 16 Green	EE	PC AJAR (Program Card)
28	Yellow Inhibit Common	FF	Channel 17 Green

-- Slotted for keying between Pins 24/BB and 25/CC

TIP Number: P-5206A

Peeler Road Extension and Grade Separation at US 29 (S. Main St.), Salisbury, Rowan County

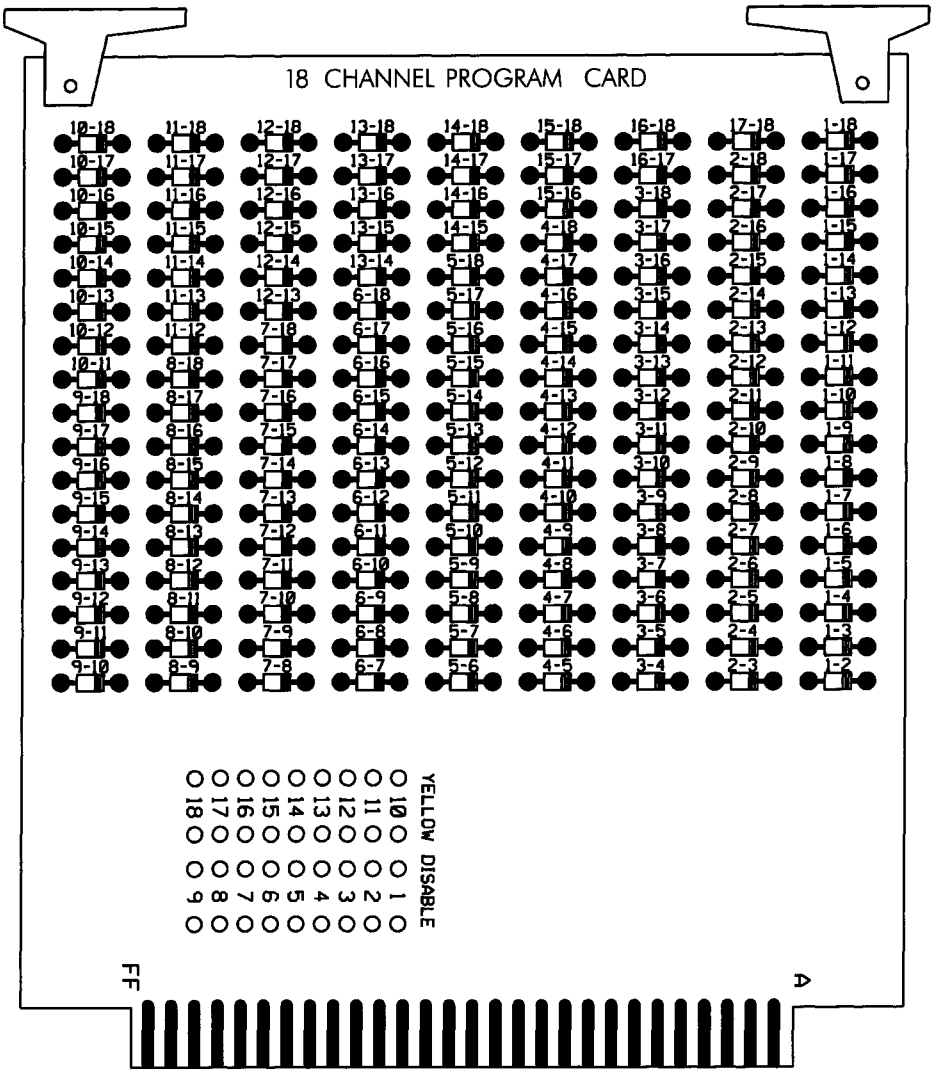

Florence & Hutcheson
An ICA Company

Project P-5206A **Rowan County**

Project Special Provisions
Structure

Table of Contents

Description		Page No.
Submittal of Working Drawings	(2-10-12)	1
Falsework and Formwork	(4-5-12)	8
Crane Safety	(8-15-05)	15
Grout for Structures	(9-30-11)	16
Elastomeric Concrete	(9-27-12)	18
Foam Joint Seals	(9-27-12)	21
Maintenance and Protection of Traffic Beneath Proposed Structure at Sta. 45+02.23 -Y2-	(8-13-04)	25
Placing Load on Structure Members	(11-27-12)	26
Thermal Sprayed Coatings (Metalization)	(9-30-11)	27
Steel Reinforced Elastomeric Bearings	(9-30-11)	31

NORTH CAROLINA PROFESSIONAL SEAL 20532 ENGINEER JAMES E. MONDOLFI

1-23-13

110

SUBMITTAL OF WORKING DRAWINGS (2-10-12)

1.0 GENERAL

Submit working drawings in accordance with Article 105-2 of the *Standard Specifications* and this provision. For this provision, "submittals" refers to only those listed in this provision. The list of submittals contained herein does not represent a list of required submittals for the project. Submittals are only necessary for those items as required by the contract. Make submittals that are not specifically noted in this provision directly to the Resident Engineer. Either the Structure Design Unit or the Geotechnical Engineering Unit or both units will jointly review submittals.

If a submittal contains variations from plan details or specifications or significantly affects project cost, field construction or operations, discuss the submittal with and submit all copies to the Resident Engineer. State the reason for the proposed variation in the submittal. To minimize review time, make sure all submittals are complete when initially submitted. Provide a contact name and information with each submittal. Direct any questions regarding submittal requirements to the Resident Engineer, Structure Design Unit contacts or the Geotechnical Engineering Unit contacts noted below.

In order to facilitate in-plant inspection by NCDOT and approval of working drawings, provide the name, address and telephone number of the facility where fabrication will actually be done if different than shown on the title block of the submitted working drawings. This includes, but is not limited to, precast concrete items, prestressed concrete items and fabricated steel or aluminum items.

2.0 ADDRESSES AND CONTACTS

For submittals to the Structure Design Unit, use the following addresses:

Via US mail:

Mr. G. R. Perfetti, P. E.
State Structures Engineer
North Carolina Department
of Transportation
Structures Management Unit
1581 Mail Service Center
Raleigh, NC 27699-1581

Attention: Mr. P. D. Lambert, P. E.

Via other delivery service:

Mr. G. R. Perfetti, P. E.
State Structures Engineer
North Carolina Department
of Transportation
Structures Management Unit
1000 Birch Ridge Drive
Raleigh, NC 27610

Attention: Mr. P. D. Lambert, P. E.

Submittals may also be made via email.

Send submittals to:

plambert@ncdot.gov (Paul Lambert)

Send an additional e-copy of the submittal to the following address:

jgaither@ncdot.gov (James Gaither)

jlbolden@ncdot.gov (James Bolden)

111

For submittals to the Geotechnical Engineering Unit, use the following addresses:

For projects in Divisions 1-7, use the following Eastern Regional Office address:

Via US mail:

Mr. K. J. Kim, Ph. D., P. E.
Eastern Regional Geotechnical Manager
North Carolina Department of Transportation
Geotechnical Engineering Unit
Eastern Regional Office
1570 Mail Service Center
Raleigh, NC 27699-1570

Via other delivery service:

Mr. K. J. Kim, Ph. D., P. E.
Eastern Regional Geotechnical Manager
North Carolina Department of Transportation
Geotechnical Engineering Unit
Eastern Regional Office
3301 Jones Sausage Road, Suite 100
Garner, NC 27529

For projects in Divisions 8-14, use the following Western Regional Office address:

Via US mail:

Mr. John Pilipchuk, L. G., P. E.
Western Regional Geotechnical Manager
North Carolina Department of Transportation
Geotechnical Engineering Unit
Western Regional Office
5253 Z Max Boulevard
Harrisburg, NC 28075

Via other delivery service:

Mr. John Pilipchuk, L. G., P. E.
Western Region Geotechnical Manager
North Carolina Department of Transportation
Geotechnical Engineering Unit
Western Regional Office
5253 Z Max Boulevard
Harrisburg, NC 28075

The status of the review of structure-related submittals sent to the Structure Design Unit can be viewed from the Unit's web site, via the "Contractor Submittal" link.

Direct any questions concerning submittal review status, review comments or drawing markups to the following contacts:

Primary Structures Contact: Paul Lambert (919) 707 – 6407
(919) 250 – 4082 facsimile
plambert@ncdot.gov

Secondary Structures Contacts: James Gaither (919) 707 – 6409
James Bolden (919) 707 – 6408

Eastern Regional Geotechnical Contact (Divisions 1-7):
K. J. Kim (919) 662 – 4710
(919) 662 – 3095 facsimile
kkim@ncdot.gov

Western Regional Geotechnical Contact (Divisions 8-14):
John Pilipchuk (704) 455 – 8902

112

(704) 455 – 8912 facsimile
jpilipchuk@ncdot.gov

3.0 SUBMITTAL COPIES

Furnish one complete copy of each submittal, including all attachments, to the Resident Engineer. At the same time, submit the number of hard copies shown below of the same complete submittal directly to the Structure Design Unit and/or the Geotechnical Engineering Unit.

The first table below covers "Structure Submittals". The Resident Engineer will receive review comments and drawing markups for these submittals from the Structure Design Unit. The second table in this section covers "Geotechnical Submittals". The Resident Engineer will receive review comments and drawing markups for these submittals from the Geotechnical Engineering Unit.

Unless otherwise required, submit one set of supporting calculations to either the Structure Design Unit or the Geotechnical Engineering Unit unless both units require submittal copies in which case submit a set of supporting calculations to each unit. Provide additional copies of any submittal as directed.

STRUCTURE SUBMITTALS

Submittal	Copies Required by Structure Design Unit	Copies Required by Geotechnical Engineering Unit	Contract Reference Requiring Submittal [1]
Arch Culvert Falsework	5	0	Plan Note, SN Sheet & "Falsework and Formwork"
Box Culvert Falsework [7]	5	0	Plan Note, SN Sheet & "Falsework and Formwork"
Cofferdams	6	2	Article 410-4
Foam Joint Seals [6]	9	0	"Foam Joint Seals"
Expansion Joint Seals (hold down plate type with base angle)	9	0	"Expansion Joint Seals"
Expansion Joint Seals (modular)	2, then 9	0	"Modular Expansion Joint Seals"
Expansion Joint Seals	9	0	"Strip Seals"

(strip seals)			
Falsework & Forms [2] (substructure)	8	0	Article 420-3 & "Falsework and Formwork"
Falsework & Forms (superstructure)	8	0	Article 420-3 & "Falsework and Formwork"
Girder Erection over Railroad	5	0	Railroad Provisions
Maintenance and Protection of Traffic Beneath Proposed Structure	8	0	"Maintenance and Protection of Traffic Beneath Proposed Structure at Station ___"
Metal Bridge Railing	8	0	Plan Note
Metal Stay-in-Place Forms	8	0	Article 420-3
Metalwork for Elastomeric Bearings [4,5]	7	0	Article 1072-8
Miscellaneous Metalwork [4,5]	7	0	Article 1072-8
Optional Disc Bearings [4]	8	0	"Optional Disc Bearings"
Overhead and Digital Message Signs (DMS) (metalwork and foundations)	13	0	Applicable Provisions
Placement of Equipment on Structures (cranes, etc.)	7	0	Article 420-20
Pot Bearings [4]	8	0	"Pot Bearings"
Precast Concrete Box Culverts	2, then 1 reproducible	0	"Optional Precast Reinforced Concrete Box Culvert at Station ___"
Prestressed Concrete Cored Slab (detensioning sequences) [3]	6	0	Article 1078-11
Prestressed Concrete Deck Panels	6 and 1 reproducible	0	Article 420-3
Prestressed Concrete Girder (strand elongation and detensioning sequences)	6	0	Articles 1078-8 and 1078-11
Removal of Existing Structure over Railroad	5	0	Railroad Provisions
Revised Bridge Deck Plans (adaptation to prestressed deck	2, then 1 reproducible	0	Article 420-3

panels)			
Revised Bridge Deck Plans (adaptation to modular expansion joint seals)	2, then 1 reproducible	0	"Modular Expansion Joint Seals"
Sound Barrier Wall (precast items)	10	0	Article 1077-2 & "Sound Barrier Wall"
Sound Barrier Wall Steel Fabrication Plans [5]	7	0	Article 1072-8 & "Sound Barrier Wall"
Structural Steel [4]	2, then 7	0	Article 1072-8
Temporary Detour Structures	10	2	Article 400-3 & "Construction, Maintenance and Removal of Temporary Structure at Station ____"
TFE Expansion Bearings [4]	8	0	Article 1072-8

FOOTNOTES

1. References are provided to help locate the part of the contract where the submittals are required. References in quotes refer to the provision by that name. Articles refer to the *Standard Specifications*.
2. Submittals for these items are necessary only when required by a note on plans.
3. Submittals for these items may not be required. A list of pre-approved sequences is available from the producer or the Materials & Tests Unit.
4. The fabricator may submit these items directly to the Structure Design Unit.
5. The two sets of preliminary submittals required by Article 1072-8 of the *Standard Specifications* are not required for these items.
6. Submittals for Fabrication Drawings are not required. Submittals for Catalogue Cuts of Proposed Material are required. See Section 5.A of the referenced provision.
7. Submittals are necessary only when the top slab thickness is 18" or greater.

GEOTECHNICAL SUBMITTALS

Submittal	Copies Required by Geotechnical Engineering Unit	Copies Required by Structure Design Unit	Contract Reference Requiring Submittal [1]
Drilled Pier Construction Plans [2]	1	0	Subarticle 411-3(A)
Crosshole Sonic Logging (CSL) Reports [2]	1	0	Subarticle 411-5(A)(2)
Pile Driving Equipment Data Forms [2,3]	1	0	Subarticle 450-3(D)(2)
Pile Driving Analyzer (PDA) Reports [2]	1	0	Subarticle 450-3(F)(3)
Retaining Walls [4]	8 drawings, 2 calculations	2 drawings	Applicable Provisions
Temporary Shoring [4]	5 drawings, 2 calculations	2 drawings	"Temporary Shoring" & "Temporary Soil Nail Walls"

FOOTNOTES

1. References are provided to help locate the part of the contract where the submittals are required. References in quotes refer to the provision by that name. Subarticles refer to the *Standard Specifications*.

2. Submit one hard copy of submittal to the Resident or Bridge Maintenance Engineer. Submit a second copy of submittal electronically (PDF via email) or by facsimile, US mail or other delivery service to the appropriate Geotechnical Engineering Unit regional office. Electronic submission is preferred.

3. The Pile Driving Equipment Data Form is available from:
   www.ncdot.org/doh/preconstruct/highway/geotech/formdet/
   See second page of form for submittal instructions.

4. Electronic copy of submittal is required. See referenced provision.

When tested in accordance with ASTM C666, Procedure A, the durability factor of the grout shall not be less than 80.

3.0 SAMPLING AND PLACEMENT

Place and maintain components in final position until grout placement is complete and accepted. Concrete surfaces to receive grout shall be free of defective concrete, laitance, oil, grease and other foreign matter. Saturate concrete surfaces with clean water and remove excess water prior to placing grout.

Do not place grout if the grout temperature is less than 50°F or more than 90°F or if the air temperature measured at the location of the grouting operation in the shade away from artificial heat is below 45°F.

Provide grout at a rate that permits proper handling, placing and finishing in accordance with the manufacturer's recommendations unless directed otherwise by the Engineer. Use grout free of any lumps and undispersed cement. Agitate grout continuously before placement.

Control grout delivery so the interval between placing batches in the same component does not exceed 20 minutes.

The Engineer will determine the locations to sample grout and the number and type of samples collected for field and laboratory testing. The compressive strength of the grout will be considered the average compressive strength test results of 3 cube or 2 cylinder specimens at 28 days.

4.0 BASIS OF PAYMENT

No separate payment will be made for "Grout for Structures". The cost of the material, equipment, labor, placement, and any incidentals necessary to complete the work shall be considered incidental to the structure item requiring grout.

117

FALSEWORK AND FORMWORK (4-5-12)

1.0 DESCRIPTION

Use this Special Provision as a guide to develop temporary works submittals required by the Standard Specifications or other provisions; no additional submittals are required herein. Such temporary works include, but are not limited to, falsework and formwork.

Falsework is any temporary construction used to support the permanent structure until it becomes self-supporting. Formwork is the temporary structure or mold used to retain plastic or fluid concrete in its designated shape until it hardens. Access scaffolding is a temporary structure that functions as a work platform that supports construction personnel, materials, and tools, but is not intended to support the structure. Scaffolding systems that are used to temporarily support permanent structures (as opposed to functioning as work platforms) are considered to be falsework under the definitions given. Shoring is a component of falsework such as horizontal, vertical, or inclined support members. Where the term "temporary works" is used, it includes all of the temporary facilities used in bridge construction that do not become part of the permanent structure.

Design and construct safe and adequate temporary works that will support all loads imposed and provide the necessary rigidity to achieve the lines and grades shown on the plans in the final structure.

2.0 MATERIALS

Select materials suitable for temporary works; however, select materials that also ensure the safety and quality required by the design assumptions. The Engineer has authority to reject material on the basis of its condition, inappropriate use, safety, or nonconformance with the plans. Clearly identify allowable loads or stresses for all materials or manufactured devices on the plans. Revise the plan and notify the Engineer if any change to materials or material strengths is required.

3.0 DESIGN REQUIREMENTS

A. Working Drawings

Provide working drawings for items as specified in the contract, or as required by the Engineer, with design calculations and supporting data in sufficient detail to permit a structural and safety review of the proposed design of the temporary work.

On the drawings, show all information necessary to allow the design of any component to be checked independently as determined by the Engineer.

When concrete placement is involved, include data such as the drawings of proposed sequence, rate of placement, direction of placement, and location of all construction joints. Submit the number of copies as called for by the contract.

When required, have the drawings and calculations prepared under the guidance of, and sealed by, a North Carolina Registered Professional Engineer who is knowledgeable in temporary works design.

If requested by the Engineer, submit with the working drawings manufacturer's catalog data listing the weight of all construction equipment that will be supported on the temporary work. Show anticipated total settlements and/or deflections of falsework and forms on the working drawings. Include falsework footing settlements, joint take-up, and deflection of beams or girders.

As an option for the Contractor, overhang falsework hangers may be uniformly spaced, at a maximum of 36 inches, provided the following conditions are met:

Member Type (PCG)	Member Depth, (inches)	Max. Overhang Width, (inches)	Max. Slab Edge Thickness, (inches)	Max. Screed Wheel Weight, (lbs.)	Bracket Min. Vertical Leg Extension, (inches)
II	36	39	14	2000	26
III	45	42	14	2000	35
IV	54	45	14	2000	44
MBT	63	51	12	2000	50
MBT	72	55	12	1700	48

Overhang width is measured from the centerline of the girder to the edge of the deck slab.

For Type II, III & IV prestressed concrete girders (PCG), 45-degree cast-in-place half hangers and rods must have a minimum safe working load of 6,000 lbs.

For MBT prestressed concrete girders, 45-degree angle holes for falsework hanger rods shall be cast through the girder top flange and located, measuring along the top of the member, 1'-2 ½" from the edge of the top flange. Hanger hardware and rods must have a minimum safe working load of 6,000 lbs.

The overhang bracket provided for the diagonal leg shall have a minimum safe working load of 3,750 lbs. The vertical leg of the bracket shall extend to the point that the heel bears on the girder bottom flange, no closer than 4 inches from the bottom of the member. However, for 72-inch members, the heel of the bracket shall bear on the web, near the bottom flange transition.

Provide adequate overhang falsework and determine the appropriate adjustments for deck geometry, equipment, casting procedures and casting conditions.

If the optional overhang falsework spacing is used, indicate this on the falsework submittal and advise the girder producer of the proposed details. Failure to notify the Engineer of hanger type and hanger spacing on prestressed concrete girder casting drawings may delay the approval of those drawings.

Falsework hangers that support concentrated loads and are installed at the edge of thin top flange concrete girders (such as bulb tee girders) shall be spaced so as not to exceed 75% of the manufacturer's stated safe working load. Use of dual leg hangers (such as Meadow Burke HF-42 and HF-43) are not allowed on concrete girders with thin top flanges. Design the falsework and forms supporting deck slabs and overhangs on girder bridges so that there will be no differential settlement between the girders and the deck forms during placement of deck concrete.

When staged construction of the bridge deck is required, detail falsework and forms for screed and fluid concrete loads to be independent of any previous deck pour components when the mid-span girder deflection due to deck weight is greater than ¾".

Note on the working drawings any anchorages, connectors, inserts, steel sleeves or other such devices used as part of the falsework or formwork that remains in the permanent structure. If the plan notes indicate that the structure contains the necessary corrosion protection required for a Corrosive Site, epoxy coat, galvanize or metalize these devices. Electroplating will not be allowed. Any coating required by the Engineer will be considered incidental to the various pay items requiring temporary works.

120

Design falsework and formwork requiring submittals in accordance with the 1995 AASHTO *Guide Design Specifications for Bridge Temporary Works* except as noted herein.

1. Wind Loads

   Table 2.2 of Article 2.2.5.1 is modified to include wind velocities up to 110 mph. In addition, Table 2.2A is included to provide the maximum wind speeds by county in North Carolina.

Table 2.2 - Wind Pressure Values

Height Zone feet above ground	Pressure, lb/ft^2 for Indicated Wind Velocity, mph				
	70	80	90	100	110
0 to 30	15	20	25	30	35
30 to 50	20	25	30	35	40
50 to 100	25	30	35	40	45
over 100	30	35	40	45	50

2. Time of Removal

   The following requirements replace those of Article 3.4.8.2.

   Do not remove forms until the concrete has attained strengths required in Article 420-16 of the Standard Specifications and these Special Provisions.

   Do not remove forms until the concrete has sufficient strength to prevent damage to the surface.

Table 2.2A - Steady State Maximum Wind Speeds by Counties in North Carolina

COUNTY	25 YR (mph)	COUNTY	25 YR (mph)	COUNTY	25 YR (mph)
Alamance	70	Franklin	70	Pamlico	100
Alexander	70	Gaston	70	Pasquotank	100
Alleghany	70	Gates	90	Pender	100
Anson	70	Graham	80	Perquimans	100
Ashe	70	Granville	70	Person	70
Avery	70	Greene	80	Pitt	90
Beaufort	100	Guilford	70	Polk	80
Bertie	90	Halifax	80	Randolph	70
Bladen	90	Harnett	70	Richmond	70
Brunswick	100	Haywood	80	Robeson	80
Buncombe	80	Henderson	80	Rockingham	70
Burke	70	Hertford	90	Rowan	70
Cabarrus	70	Hoke	70	Rutherford	70
Caldwell	70	Hyde	110	Sampson	90
Camden	100	Iredell	70	Scotland	70
Carteret	110	Jackson	80	Stanley	70
Caswell	70	Johnston	80	Stokes	70
Catawba	70	Jones	100	Surry	70
Cherokee	80	Lee	70	Swain	80
Chatham	70	Lenoir	90	Transylvania	80
Chowan	90	Lincoln	70	Tyrell	100
Clay	80	Macon	80	Union	70
Cleveland	70	Madison	80	Vance	70
Columbus	90	Martin	90	Wake	70
Craven	100	McDowell	70	Warren	70
Cumberland	80	Mecklenburg	70	Washington	100
Currituck	100	Mitchell	70	Watauga	70
Dare	110	Montgomery	70	Wayne	80
Davidson	70	Moore	70	Wilkes	70
Davie	70	Nash	80	Wilson	80
Duplin	90	New Hanover	100	Yadkin	70
Durham	70	Northampton	80	Yancey	70
Edgecombe	80	Onslow	100		
Forsyth	70	Orange	70		

B. Review and Approval

The Engineer is responsible for the review and approval of temporary works' drawings.

Submit the working drawings sufficiently in advance of proposed use to allow for their review, revision (if needed), and approval without delay to the work.

The time period for review of the working drawings does not begin until complete drawings and design calculations, when required, are received by the Engineer.

Do not start construction of any temporary work for which working drawings are required until the drawings have been approved. Such approval does not relieve the Contractor of the responsibility for the accuracy and adequacy of the working drawings.

4.0 CONSTRUCTION REQUIREMENTS

All requirements of Section 420 of the Standard Specifications apply.

Construct temporary works in conformance with the approved working drawings. Ensure that the quality of materials and workmanship employed is consistent with that assumed in the design of the temporary works. Do not weld falsework members to any portion of the permanent structure unless approved. Show any welding to the permanent structure on the approved construction drawings.

Provide tell-tales attached to the forms and extending to the ground, or other means, for accurate measurement of falsework settlement. Make sure that the anticipated compressive settlement and/or deflection of falsework does not exceed 1 inch. For cast-in-place concrete structures, make sure that the calculated deflection of falsework flexural members does not exceed 1/240 of their span regardless of whether or not the deflection is compensated by camber strips.

A. Maintenance and Inspection

Inspect and maintain the temporary work in an acceptable condition throughout the period of its use. Certify that the manufactured devices have been maintained in a condition to allow them to safely carry their rated loads. Clearly mark each piece so that its capacity can be readily determined at the job site.

Perform an in-depth inspection of an applicable portion(s) of the temporary works, in the presence of the Engineer, not more than 24 hours prior to the beginning of each concrete placement. Inspect other temporary works at least once a month to ensure that they are functioning properly. Have a North Carolina Registered Professional Engineer inspect the cofferdams, shoring, sheathing, support of excavation structures, and support systems for load tests prior to loading.

B. Foundations

Determine the safe bearing capacity of the foundation material on which the supports for temporary works rest. If required by the Engineer, conduct load tests to verify proposed bearing capacity values that are marginal or in other high-risk situations.

The use of the foundation support values shown on the contract plans of the permanent structure is permitted if the foundations are on the same level and on the same soil as those of the permanent structure.

Allow for adequate site drainage or soil protection to prevent soil saturation and washout of the soil supporting the temporary works supports.

If piles are used, the estimation of capacities and later confirmation during construction using standard procedures based on the driving characteristics of the pile is permitted. If preferred, use load tests to confirm the estimated capacities; or, if required by the Engineer conduct load tests to verify bearing capacity values that are marginal or in other high risk situations.

The Engineer reviews and approves the proposed pile and soil bearing capacities.

5.0 REMOVAL

Unless otherwise permitted, remove and keep all temporary works upon completion of the work. Do not disturb or otherwise damage the finished work.

Remove temporary works in conformance with the contract documents. Remove them in such a manner as to permit the structure to uniformly and gradually take the stresses due to its own weight.

6.0 METHOD OF MEASUREMENT

Unless otherwise specified, temporary works will not be directly measured.

7.0 BASIS OF PAYMENT

Payment at the contract unit prices for the various pay items requiring temporary works will be full compensation for the above falsework and formwork.

124

CRANE SAFETY (8-15-05)

Comply with the manufacturer specifications and limitations applicable to the operation of any and all cranes and derricks. Prime contractors, sub-contractors, and fully operated rental companies shall comply with the current Occupational Safety and Health Administration regulations (OSHA).

Submit all items listed below to the Engineer prior to beginning crane operations involving critical lifts. A critical lift is defined as any lift that exceeds 75 percent of the manufacturer's crane chart capacity for the radius at which the load will be lifted or requires the use of more than one crane. Changes in personnel or equipment must be reported to the Engineer and all applicable items listed below must be updated and submitted prior to continuing with crane operations.

CRANE SAFETY SUBMITTAL LIST

A. **Competent Person:** Provide the name and qualifications of the "Competent Person" responsible for crane safety and lifting operations. The named competent person will have the responsibility and authority to stop any work activity due to safety concerns.

B. **Riggers:** Provide the qualifications and experience of the persons responsible for rigging operations. Qualifications and experience should include, but not be limited to, weight calculations, center of gravity determinations, selection and inspection of sling and rigging equipment, and safe rigging practices.

C. **Crane Inspections:** Inspection records for all cranes shall be current and readily accessible for review upon request.

D. **Certifications:** **By July 1, 2006,** crane operators performing critical lifts shall be certified by NC CCO (National Commission for the Certification of Crane Operators), or satisfactorily complete the Carolinas AGC's Professional Crane Operator's Proficiency Program. Other approved nationally accredited programs will be considered upon request. All crane operators shall also have a current CDL medical card. Submit a list of anticipated critical lifts and corresponding crane operator(s). Include current certification for the type of crane operated (small hydraulic, large hydraulic, small lattice, large lattice) and medical evaluations for each operator.

125

GROUT FOR STRUCTURES (9-30-11)

1.0 DESCRIPTION

This special provision addresses grout for use in pile blockouts, grout pockets, shear keys, dowel holes and recesses for structures. This provision does not apply to grout placed in post-tensioning ducts for bridge beams, girders, or decks. Mix and place grout in accordance with the manufacturer's recommendations, the applicable sections of the Standard Specifications and this provision.

2.0 MATERIAL REQUIREMENTS

Use a Department approved pre-packaged, non-shrink, non-metallic grout. Contact the Materials and Tests Unit for a list of approved pre-packaged grouts and consult the manufacturer to determine if the pre-packaged grout selected is suitable for the required application.

When using an approved pre-packaged grout, a grout mix design submittal is not required.

The grout shall be free of soluble chlorides and contain less than one percent soluble sulfate. Supply water in compliance with Article 1024-4 of the Standard Specifications.

Aggregate may be added to the mix only where recommended or permitted by the manufacturer and Engineer. The quantity and gradation of the aggregate shall be in accordance with the manufacturer's recommendations.

Admixtures, if approved by the Department, shall be used in accordance with the manufacturer's recommendations. The manufacture date shall be clearly stamped on each container. Admixtures with an expired shelf life shall not be used.

The Engineer reserves the right to reject material based on unsatisfactory performance.

Initial setting time shall not be less than 10 minutes when tested in accordance with ASTM C266.

Test the expansion and shrinkage of the grout in accordance with ASTM C1090. The grout shall expand no more than 0.2% and shall exhibit no shrinkage. Furnish a Type 4 material certification showing results of tests conducted to determine the properties listed in the Standard Specifications and to assure the material is non-shrink.

Unless required elsewhere in the contract the compressive strength at 3 days shall be at least 5000 psi. Compressive strength in the laboratory shall be determined in accordance with ASTM C109 except the test mix shall contain only water and the dry manufactured material. Compressive strength in the field will be determined by molding and testing 4" x 8" cylinders in accordance with AASHTO T22. Construction loading and traffic loading shall not be allowed until the 3 day compressive strength is achieved.

When tested in accordance with ASTM C666, Procedure A, the durability factor of the grout shall not be less than 80.

3.0 SAMPLING AND PLACEMENT

Place and maintain components in final position until grout placement is complete and accepted. Concrete surfaces to receive grout shall be free of defective concrete, laitance, oil, grease and other foreign matter. Saturate concrete surfaces with clean water and remove excess water prior to placing grout.

Do not place grout if the grout temperature is less than 50°F or more than 90°F or if the air temperature measured at the location of the grouting operation in the shade away from artificial heat is below 45°F.

Provide grout at a rate that permits proper handling, placing and finishing in accordance with the manufacturer's recommendations unless directed otherwise by the Engineer. Use grout free of any lumps and undispersed cement. Agitate grout continuously before placement.

Control grout delivery so the interval between placing batches in the same component does not exceed 20 minutes.

The Engineer will determine the locations to sample grout and the number and type of samples collected for field and laboratory testing. The compressive strength of the grout will be considered the average compressive strength test results of 3 cube or 2 cylinder specimens at 28 days.

4.0 BASIS OF PAYMENT

No separate payment will be made for "Grout for Structures". The cost of the material, equipment, labor, placement, and any incidentals necessary to complete the work shall be considered incidental to the structure item requiring grout.

127

ELASTOMERIC CONCRETE (9-27-12)

1.0 DESCRIPTION

Elastomeric concrete is a mixture of a two-part polymer consisting of polyurethane and/or epoxy and kiln-dried aggregate. Provide an elastomeric concrete and binder system that is preapproved. Use the concrete in the blocked out areas on both sides of the bridge deck joints as indicated on the plans.

2.0 MATERIALS

Provide materials that comply with the following minimum requirements at 14 days (or at the end of the specified curing time).

ELASTOMERIC CONCRETE PROPERTIES	TEST METHOD	MINIMUM REQUIREMENT
Compressive Strength, psi	ASTM D695	2000
5% Deflection Resilience	ASTM D695	95
Splitting Tensile Strength, psi	ASTM D3967	625
Bond Strength to Concrete, psi	ASTM D882 (D882M)	450
Durometer Hardness	ASTM D2240	50

BINDER PROPERTIES (without aggregate)	TEST METHOD	MINIMUM REQUIREMENT
Tensile Strength, psi	ASTM D638	1000
Ultimate Elongation	ASTM D638	150%
Tear Resistance, lb/in	ASTM D624	200

In addition to the requirements above, the elastomeric concrete must be resistant to water, chemical, UV and ozone exposure and withstand temperature extremes. Elastomeric concrete systems requiring preheated aggregates are not allowed.

3.0 PREQUALIFICATION

Manufacturers of elastomeric concrete materials shall submit samples (including aggregate, primer and binder materials) and a Type 3 certification in accordance with Article 106-3 of the Standard Specifications for prequalification to:

North Carolina Department of Transportation
Materials and Tests Unit

1801 Blue Ridge Road
Raleigh, NC 27607

Prequalification will be determined for the system. Individual components will not be evaluated, nor will individual components of previously evaluated systems be deemed prequalified for use.

The submitted binder (a minimum volume of 1 gallon) and corresponding aggregate samples will be evaluated for compliance with the Materials requirements specified above. Systems satisfying all of the Materials requirements will be prequalified for a one year period. Before the end of this period new product samples shall be resubmitted for prequalification evaluation.

If, at any time, any formulation or component modifications are made to a prequalified system that system will no longer be approved for use.

4.0 INSTALLATION

The elastomeric concrete shall not be placed until the reinforced concrete deck slab has cured for seven full days and reached a minimum strength of 3000 psi.

Provide a manufacturer's representative at the bridge site during the installation of the elastomeric concrete to ensure that all steps being performed comply with all manufacturer installation requirements including, but not limited to weather conditions (ambient temperature, relative humidity, precipitation, wind, etc), concrete deck surface preparation, binder and aggregate mixing, primer application, elastomeric concrete placement, curing conditions and minimum curing time before joint exposure to traffic. Do not place elastomeric concrete if the ambient air or surface temperature is below 45°F.

Prepare the concrete surface within 48 hours prior to placing the elastomeric concrete. Before placing the elastomeric concrete, all concrete surfaces shall be thoroughly cleaned and dry. Sandblast the concrete surface in the blockout and clear the surface of all loose debris. Do not place the elastomeric concrete until the surface preparation is completed and approved.

Prepare and apply a primer, as per manufacturer's recommendations, to all concrete faces to be in contact with elastomeric concrete, and to areas specified by the manufacturer.

Prepare, batch, and place the elastomeric concrete in accordance with the manufacturer's instructions. Place the elastomeric concrete in the areas specified on the plans while the primer is still tacky and within 2 hours after applying the primer. Trowel the elastomeric concrete to a smooth finish.

The joint opening in the elastomeric concrete shall match the formed opening in the concrete deck prior to sawing the joint.

5.0 FIELD SAMPLING

Provide additional production material to allow freshly mixed elastomeric concrete to be sampled for acceptance. A minimum of six 2 inch cube molds and three 3x6 inch cylinders will be taken by the Department for each day's production. Compression, splitting tensile, and durometer hardness testing will be performed by the Department to determine acceptance. Materials failing to meet the requirements listed above are subject to removal and replacement at no cost to the Department.

6.0 BASIS OF PAYMENT

No separate payment will be made for elastomeric concrete. The lump sum contract price bid for "Foam Joint Seals" will be full compensation for furnishing and placing the Elastomeric Concrete.

130

FOAM JOINT SEALS (9-27-12)

1.0 SEALS

Use preformed seals compatible with concrete and resistant to abrasion, oxidation, oils, gasoline, salt and other materials that are spilled on or applied to the surface. Use a resilient, UV stable, preformed, impermeable, flexible, expansion joint seal. The joint seal shall consist of low-density, closed cell, cross-linked polyethylene non-extrudable, foam. The joint seal shall contain no EVA (Ethylene Vinyl Acetate). Cell generation shall be achieved by being physically blown using nitrogen. No chemical blowing agents shall be used in the cell generation process.

Use seals manufactured with grooves 1/8"± wide by 1/8"± deep and spaced between 1/4" and 1/2" apart along the bond surface running the length of the joint. Use seals with a depth that meets the manufacturer's recommendation, but is not less than 70% of the uncompressed width. Provide a seal designed so that, when compressed, the center portion of the top does not extend upward above the original height of the seal by more than 1/4". Provide a seal that has a working range of 30% tension and 60% compression and meets the requirements given below.

TEST	TEST METHOD	REQUIREMENT
Tensile strength	ASTM D3575-08, Suffix T	110 – 130 psi
Compression Set	ASTM D1056 Suffix B, 2 hr recovery	10% - 16%
Water Absorption	ASTM D3575	< 0.03 lb/ft^2
Elongation at Break	ASTM D3575	180% - 210%
Tear Strength	ASTM D624 (D3575-08, Suffix G)	14 – 20 pli
Density	ASTM D3575-08, Suffix W, Method A	1.8 – 2.2 lb/ft^3
Toxicity	ISO-10993.5	Pass (not cytotoxic)

Have the top of the joint seal clearly shop marked. Inspect the joint seals upon receipt to ensure that the marks are clearly visible before installation.

2.0 BONDING ADHESIVE

Use a two component, 100% solid, modified epoxy adhesive supplied by the joint seal manufacturer that meets the requirements given below.

TEST	TEST METHOD	REQUIREMENT
Tensile strength	ASTM D638	3000 psi (min.)
Compressive strength	ASTM D695	7000 psi (min.)
Hardness	Shore D Scale	75-85 psi
Water Absorption	ASTM D570	0.25% by weight max.
Elongation to Break	ASTM D638	5% (max.)
Bond Strength	ASTM C882	2000 psi (min.)

Use an adhesive that is workable to 40°F. When installing in ambient air or surface temperatures below 40°F or for application on moist, difficult to dry concrete surfaces, use an adhesive specified by the manufacturer of the joint seal.

3.0 SAWING THE JOINT

The joint opening shall be initially formed to the width shown on the plans including the blockout for the elastomeric concrete.

The elastomeric concrete shall have sufficient time to cure such that no damage can occur to the elastomeric concrete prior to sawing to the final width and depth as specified in the plans.

When sawing the joint to receive the foam seal, always use a rigid guide to control the saw in the desired direction. To control the saw and to produce a straight line as indicated on the plans, anchor and positively connect a template or a track to the bridge deck. Do not saw the joint by visual means such as a chalk line. Fill the holes used for holding the template or track to the deck with an approved, flowable non-shrink, non-metallic grout.

Saw cut to the desired width and depth in one or two passes of the saw by placing and spacing two metal blades on the saw shaft to the desired width for the joint opening.

The desired depth is the depth of the seal plus 1/4" above the top of the seal plus approximately 1" below the bottom of the seal. An irregular bottom of sawed joint is permitted as indicated on the plans. Grind exposed corners on saw cut edges to a 1/4" chamfer.

Saw cut a straight joint, centered over the formed opening and to the desired width specified in the plans. Prevent any chipping or damage to the sawed edges of the joint.

Remove any staining or deposited material resulting from sawing with a wet blade to the satisfaction of the Engineer.

4.0 PREPARATION OF SAWED JOINT FOR SEAL INSTALLATION

The elastomeric concrete shall cure a minimum of 24 hours prior to seal installation.

After sawing the joint, the Engineer will thoroughly inspect the sawed joint opening for spalls, popouts, cracks, etc. All necessary repairs will be made by the Contractor prior to blast cleaning and installing the seal.

Clean the joints by sandblasting with clean dry sand immediately before placing the bonding agent. Sandblast the joint opening to provide a firm, clean joint surface free of curing compound, loose material and any foreign matter. Sandblast the joint opening without causing pitting or uneven surfaces. The aggregate in the elastomeric concrete may be exposed after sandblasting.

After blasting, either brush the surface with clean brushes made of hair, bristle or fiber, blow the surface with compressed air, or vacuum the surface until all traces of blast products and abrasives are removed from the surface, pockets, and corners.

If nozzle blasting is used to clean the joint opening, use compressed air that does not contain detrimental amounts of water or oil.

Examine the blast cleaned surface and remove any traces of oil, grease or smudge deposited in the cleaning operations.

Bond the seal to the blast cleaned surface on the same day the surface is blast cleaned.

5.0 SEAL INSTALLATION

Install the joint seal according to the manufacturer's procedures and recommendations and as recommended below. Do not install the joint seal if the ambient air or surface temperature is below 45°F. Have a manufacturer's certified trained factory representative present during the installation of the first seal of the project.

Before installing the joint seal, check the uninstalled seal length to insure the seal is the same length as the deck opening. When the joint seal requires splicing, use the heat welding method by placing the joint material ends against a teflon heating iron of 425-475°F for 7 - 10 seconds, then pressing the ends together tightly. Do not test the welding until the material has completely cooled.

Begin installation by protecting the top edges of the concrete deck adjacent to the vertical walls of the joint as a means to minimize clean up. After opening both cans of the bonding agent, stir each can using separate stirring rods for each component to prevent premature curing of the bonding agent. Pour the two components, at the specified mixing ratio, into a clean mixing bucket. Mix the components with a low speed drill (400 rpm max.) until a uniform gray color is achieved without visible marbling. Apply bonding agent to both sides of the elastomeric concrete as well as both sides of the joint seal, making certain to completely fill the grooves with epoxy. With gloved hands, compress the joint seal and

with the help of a blunt probe, push the seal into the joint opening until the seal is recessed approximately 1/4" below the surface. When pushing down on the joint seal, apply pressure only in a downward direction. Do not push the joint seal into the joint opening at an angle that would stretch the material. Seals that are stretched during installation shall be removed and rejected. Once work on placing a seal begins, do not stop until it is completed. Clean the excess epoxy from the top of the joint seal immediately with a trowel. Do not use solvents or any cleaners to remove the excess epoxy from the top of the seal. Remove the protective cover at the joint edges and check for any excess epoxy on the surface. Remove excess epoxy with a trowel, the use of solvents or any cleaners will not be allowed.

The installed system shall be watertight and will be monitored until final inspection and approval. Do not place pavement markings on top of foam joint seals.

6.0 BASIS OF PAYMENT

Payment for all foam joint seals will be at the lump sum contract price bid for "Foam Joint Seals". Prices and payment will be full compensation for furnishing all material, including elastomeric concrete, labor, tools and equipment necessary for installing these units in place and accepted.

134

MAINTENANCE AND PROTECTION OF TRAFFIC BENEATH PROPOSED STRUCTURE AT STATION 45+02.23 –Y2- (8-13-04)

1.0 GENERAL

Maintain traffic on US 29 as shown in Traffic Control Plans and as directed by the Engineer.

Provide a minimum temporary vertical clearance of 16'-6" at all times during construction.

Submit plans and calculations for review and approval for protecting traffic and bracing girders, as described herein, at the above station before beginning work at this location. Have the drawings and design calculations prepared, signed, and sealed by a North Carolina Registered Professional Engineer. The approval of the Engineer will not relieve the Contractor of the responsibility for the safety of the method or equipment.

2.0 PROTECTION OF TRAFFIC

Protect traffic from any operation that affords the opportunity for construction materials, equipment, tools, etc. to be dropped into the path of traffic beneath the structure. Based on Contractor means and methods determine and clearly define all dead and live loads for this system, which, at a minimum, shall be installed between beams or girders over any travelway or shoulder area where traffic is maintained. Install the protective system before beginning any construction operations over traffic. In addition, for these same areas, keep the overhang falsework in place until after the rails have been poured.

3.0 BRACING GIRDERS

Brace girders to resist wind forces, weight of forms and other temporary loads, especially those eccentric to the vertical axis of the member during all stages of erection and construction. Before casting of intermediate diaphragms, decks, or connecting steel diaphragms do not allow the horizontal movement of girders to exceed ½ inch.

4.0 BASIS OF PAYMENT

Payment at the contract unit prices for the various pay items will be full compensation for the above work.

135

PLACING LOAD ON STRUCTURE MEMBERS (11-27-12)

The 2012 Standard Specifications shall be revised as follows:
In **Section 420-20 – Placing Load on Structure Members** replace the first sentence of the fifth paragraph with the following:

Do not place vehicles or construction equipment on a bridge deck until the deck concrete develops the minimum specified 28 day compressive strength and attains an age of at least 7 curing days.

T 136

THERMAL SPRAYED COATINGS (METALLIZATION) (9-30-11)

1.0 DESCRIPTION

Apply a thermal sprayed coating (TSC) and sealer to metal surfaces as specified herein when called for on the plans or by other Special Provisions, or when otherwise approved by the Engineer in accordance with the SSPC-CS 23.00/AWS C2.23/NACE No. 12 Specification. Only Arc Sprayed application methods are used to apply TSC coatings, the Engineer must approve other methods of application.

2.0 QUALIFICATIONS

Only use NCDOT approved TSC Contractors meeting the following requirements:

1.T he capability of blast cleaning steel surfaces to SSPC SP-5 and SP-10 Finishes.

2.Em ploy Spray Operator(s) qualified in accordance with AWS C.16/C2.16M2002 and Quality Control Inspector(s) who have documented training in the applicable test procedures of ASTM D-3276 and SSPC-CS 23.00.

A summary of the contractor's related work experience and the documents verifying each Spray Operator's and Quality Control Inspector's qualifications are submitted to the Engineer before any work is performed.

3.0 MATERIALS

Provide wire in accordance with the metallizing equipment manufacturer's recommendations. Use the wire alloy specified on the plans which meets the requirements in Annex **C** of the SSPC-CS 23.00 Specification. Have the contractor provide a certified analysis (NCDOT Type 2 Certification) for each lot of wire material.

Apply an approved sealer to all metallized surfaces in accordance with Section 9 of SSPC-CS 23. The sealer must either meet SSPC Paint 27 or is an alternate approved by the Engineer.

4.0 SURFACE PREPARATION AND TSC APPLICATION

Grind flame cut edges to remove the carbonized surface prior to blasting. Bevel all flame cut edges in accordance with Article 442-10(D) regardless of included angle. Blast clean surfaces to be metallized with grit or mineral abrasive in accordance with Steel Structures Painting Council SSPC SP-5/10(as specified) to impart an angular surface profile of 2.5 - 4.0 mils. Surface preparation hold times are in accordance with Section 7.32 of SSPC-CS 23. If flash rusting occurs prior to metallizing, blast clean the metal surface again. Apply the thermal sprayed coating only when the surface temperature of the steel is at least 5°F above the dew point.

At the beginning of each work period or shift, conduct bend tests in accordance with Section 6.5 of SSPC-CS 23.00. Any disbonding or delamination of the coating that

exposes the substrate requires corrective action, additional testing, and the Engineer's approval before resuming the metallizing process.

Apply TSC with the alloy to the thickness specified on the plans or as provided in the table below. All spot results (the average of 3 to 5 readings) must meet the minimum requirement. No additional tolerance (as allowed by SSPC PA-2) is permitted. (For Steel Beams: For pieces with less than 200 ft^2 measure 2 spots/surface per piece and for pieces greater than 200 ft^2 add 1 additional spots/surface for each 500 ft^2).

Application	Thickness	Alloy	Seal Coat
Pot Bearings	8 mil	85/15 Zinc (W-Zn-Al-2)	0.5 mil
Armored Joint Angles	8 mil	85/15 Zinc (W-Zn-Al-2)	0.5 mil
Modular Joints	8 mil	99.99% Zn (W-Zn-1)	0.5 mil
Expansion Joint Seals	8 mil	99.99% Zn (W-Zn-1)	0.5 mil
Optional Disc Bearings	8 mil	85/15 Zinc (W-Zn-Al-2)	0.5 mil

When noted on the plans or as specified in the above chart, apply the sealer to all metallized surfaces in accordance with the manufacturer's recommendations and these provisions. Apply the seal coat only when the air temperature is above 40°F and the surface temperature of the steel is at least 5°F above the dew point. If the sealer is not applied within eight hours after the final application of TSC, the applicator verifies acceptable TSC surfaces and obtains approval from the Engineer before applying the sealer.

5.0 INSPECTION FREQUENCY

The TSC Contractor must conduct the following tests at the specified frequency and the results documented in a format approved by the Engineer.

Test/Standard	Location	Frequency	Specification
Ambient Conditions	Site	Each Process	5°F above the dew point
Abrasive Properties	Site	Each Day	Size, angularity, cleanliness
Surface Cleanliness SSPC Vis 1	All Surfaces	Visual All Surfaces	SSPC-SP-10 Atmospheric Service SSPC-SP - 5 Immersion Service
Surface Profile ASTM D-4417 Method C	Random Surfaces	3 per 500 ft^2	2.5 - 4.0 mils
Bend Test SSPC-CS 23.00	Site	5 per shift	Pass Visual
Thickness SSPC PA-2R SSPC-CS 23.00	Each Surface	Use the method in PA-2 Appendix 3 for Girders and Appendix 4 for frames and miscellaneous steel. See Note 1.	Zn - 8 mils minimum Al - 8 mils minimum Zn Al - 8 mils minimum Areas with more than twice the minimum thickness are inspected for compliance to the adhesion and cut testing requirements of this specification.
Adhesion ASTM 4541	Random Surfaces Splice Areas	1 set of 3 per 500 ft^2	Zn > 500 psi Al > 1000 psi Zn Al > 750 psi
Cut Test - SSPC-CS 23.00	Random Surfaces	3 sets of 3 per 500 ft^2	No peeling or delamination
Job Reference Std. SSPC-CS 23.00	Site	1 per job	Meets all the above requirements

6.0 REPAIRS

All Repairs are to be performed in accordance with the procedures below, depending on whether the repair surface is hidden or exposed. As an exception to the following, field welded splices on joint angles and field welding bearing plates to girders may be repaired in accordance with the procedures for hidden surfaces.

For hidden surfaces (including but not limited to interior girders, interior faces of exterior girders, and below-grade sections of piles):

1. Welding of metallized surfaces may be performed only if specifically permitted by the Engineer. Remove metallizing at the location of field welds by blast cleaning (SSPC SP-6 finish), or hand (SSPC SP-2 finish) or power tool cleaning (SSPC SP-3 finish) just prior to welding. Clean sufficiently to prevent contamination of the weld. All repairs to welded connections are metallized in accordance with SSPC CS 23.00.

2. Minor areas less than or equal to 0.1 ft^2 exposing the substrate are metallized in accordance with SSPC CS 23.00 or painted in accordance with ASTM A780, "Repair of Damaged and Uncoated Areas of Hot Dip Galvanized Coatings."

3. Large areas greater than 0.1 ft^2 exposing the substrate are metallized in accordance with SSPC CS 23.00.

4. Damaged (burnished) areas not exposing the substrate with less than the specified coating thickness are metallized in accordance with SSPC CS 23.00 or painted in accordance with ASTM A780, "Repair of Damaged and Uncoated Areas of Hot Dip Galvanized Coatings."

5. Damaged (burnished) areas not exposing the substrate with more than the specified coating thickness are not repaired.

6. Defective coating is repaired by either method 2 or 3 depending on the area of the defect.

For Exposed Surfaces (including but not limited to exterior faces of exterior girders and above-grade sections of piles):

1. Welding of metallized surfaces may be performed only if specifically permitted by the Engineer. Remove metallization at the location of field welds by blast cleaning (SSPC SP-6 finish), or hand (SSPC SP-2 finish) or power tool cleaning (SSPC SP-3 finish) just prior to welding. Clean sufficiently to prevent contamination of the weld. All repairs to welded connections are metallized in accordance with SSPC CS 23.00.

2. All areas exposing the substrate are metallized in accordance with SSPC CS 23.00

3. Defective coating is repaired by either method 2 or 3 depending on the area of the defect.

7.0 Twelve Month Observation Period

The contractor maintains responsibility for the coating system for a twelve (12) month observation period beginning upon the satisfactory completion of all the work required in the plans or as directed by the engineer. The contractor must guarantee the coating system under the payment and performance bond (refer to Article 109-10). To successfully complete the observation period, the coating system must meet the following requirements after twelve(12) months service:

- No visible rust, contamination or application defect is observed in any coated area.
- Painted surfaces have a uniform color and gloss.
- Surfaces have an adhesion of no less than 500 psi when tested in accordance with ASTM D-4541.

8.0 Basis of Payment

The contract price bid for the bridge component to which the coating is applied will be full compensation for the thermal sprayed coating.

140

STEEL REINFORCED ELASTOMERIC BEARINGS (11-27-12)

The 2012 Standard Specifications shall be revised as follows:
In **Section 1079-1 – Preformed Bearing Pads** add the following after the second paragraph:

Internal holding pins are required for all shim plates when the contract plans indicate the structure contains the necessary corrosion protection for a corrosive site.

Repair laminated (reinforced) bearing pads utilizing external holding pins via vulcanization. Submit product data for repair material and a detailed application procedure to the Materials and Tests Unit for approval before use and annually thereafter.

Revised 3-7-13

SPECIAL PROVISIONS FOR PROTECTION OF RAILWAY INTEREST ON THE NCRR CORRIDOR

Under the terms of these Special Provisions, the North Carolina Department of Transportation shall hereinafter be called "Department," the North Carolina Railroad Company shall hereinafter be called "Company," and the Norfolk Southern Railway Company shall hereinafter be called "Railroad."

1. AUTHORITY OF RAILROAD ENGINEER AND DEPARTMENT ENGINEER:

The authorized representative of the Railroad, hereinafter referred to as "Railroad Engineer," shall have final authority in all matters affecting the safe maintenance of Railroad traffic, including the adequacy of the foundations and structures supporting the tracks owned by Company and operated by Railroad.

The authorized representative of the North Carolina Department of Transportation, hereinafter referred to as the "Department Engineer," shall have authority over all other matters as prescribed herein including Project Specifications, Special Provisions, and the plans.

2. NOTICE OF STARTING WORK:

A. The Contractor shall not commence any work on Company's corridor until he has complied with the following conditions:

(1) Give the Company and Railroad written notice, with copy to the Department Engineer who is designated to be in charge of the work, at least ten (10) days in advance of the date he proposes to begin work on Company's corridor to:

Assistant Chief Engineer – MW&S
Norfolk Southern Corporation
1200 Peachtree Street NE
Internal Box 142
Atlanta, Georgia 30309

Vice President - Engineering
North Carolina Railroad Company
2809 Highwoods Boulevard, Suite 100
Raleigh, North Carolina 27604

(2) Obtain written approval from the Company and Railroad of Railroad Protective Liability Insurance coverage as required by Section 14 herein. Neither the Railroad nor the Company accepts notation of Railroad protective insurance on a certificate of liability insurance form or Binders as Railroad and Company must have the full original countersigned policy. The policies will be reviewed by Railroad and Company for compliance prior to written approval. Due to the number of projects system-wide, it typically takes a minimum of 30-45 days for Railroad and Company to review.

(3) Obtain Railroad's Flagging Services as required by Section 7 herein.

(4) Obtain written authorization from the Railroad to begin work on Company's corridor, such authorization to include an outline of specific conditions with which he must comply.

(5) Furnish a schedule for all work within the Company corridor as required by Section 7B1 herein.

B. The Railroad's written authorization to proceed with the work will include the names, addresses, and telephone numbers of the Railroad's representatives who are to be notified as hereinafter required. Where more than one representative is designated, the area of responsibility of each representative will be specified.

3. INTERFERENCE WITH RAILROAD OPERATIONS:

A. The Contractor shall so arrange and conduct his work that there will be no interference with Railroad operations, including train, signal, telephone and telegraphic services, or damage to the property of the Company or Railroad or to poles, wires, and other facilities of licensee on the corridor of the Company. Whenever work is liable to affect the operations or safety of trains, the method of doing such work shall first be submitted to the Railroad Engineer for approval, but such approval shall not relieve the Contractor from liability. Any work to be performed by the Contractor which requires flagging service or inspection service (watchman) shall be deferred by the Contractor until the flagging protection or inspection service required by the Railroad is available at the job site.

B. Whenever work within Company's corridor is of such a nature that impediment to Railroad operations such as use of runaround tracks or necessity for reduced speed is unavoidable, the Contractor shall schedule and conduct his operations so that such impediment is reduced to the absolute minimum.

C. Should conditions arising from, or in connection with the work, require that immediate and unusual provisions be made to protect operations and property of the Company and Railroad, the Contractor shall make such provisions. If in the judgment of the Railroad Engineer, or in his absence, the Railroad's Division Engineer, such provision is insufficient, either may require or provide such provisions as he deems necessary. In any event, such unusual provisions shall be at the Contractor's expense and without cost to the Department, Company, or Railroad.

4. TRACK CLEARANCES:

A. The minimum track clearances to be maintained by the Contractor during construction are as follows:

(1) Horizontal clearance measured from centerline of track to falsework:

13'-0" on tangent track
14'-0" on curved track

(2) Vertical clearance from top of rail to falsework: 22'-0"

B. However, before undertaking any work within Company's corridor, or before placing any obstruction over any track, the Contractor shall:

(1) Notify the Railroad Engineer at least 72 hours in advance of the work.

(2) Receive assurance from the Railroad Engineer that arrangements have been made for flagging service as may be necessary.

(3) Receive permission from the Railroad Engineer to proceed with the work.

(4) Ascertain that the Department Engineer has received copies of notice to the Railroad and of the Railroad's response thereto.

5. CONSTRUCTION PROCEDURES:

A. General:

Construction work and operations by the Contractor on Company's corridor, tracks, and other facilities shall be:

(1) Subject to the inspection and approval of the Railroad and the Company.

(2) In accord with the Railroad's written outline of specific conditions.

(3) In accord with the Railroad's general rules, regulations and requirements including those relating to safety, fall protection, and personal protective equipment.

(4) In accord with these Special Provisions.

B. Excavation:

The subgrade of an operated track shall be maintained with edge of berm at least 7'-0" from centerline of track and not more than 24 inches below top of rail. The Contractor will not be required to make existing section meet this specification if substandard, in which case existing section will be maintained.

Additionally, the Railroad Engineer may require the Contractor to install orange construction safety fencing for protection of the work area.

Revised 3-7-13

C. Excavation for Structures:

The Contractor will be required to take special precaution and care in connection with excavating and shoring pits, and in driving piles or sheeting, for footings adjacent to tracks to provide adequate lateral support for the tracks and the loads which they carry, without disturbance of track alignment and surface, and to avoid obstructing track clearances with working equipment, tools or other material. All plans and calculations for shoring shall be prepared and signed by a North Carolina Registered Professional Engineer ("Professional Engineer"). The Professional Engineer will be responsible for the accuracy for all controlling dimensions as well as the selection of soil design values which will accurately reflect the actual field conditions. The procedure for doing such work, including need of and plans for shoring, shall first be reviewed by the Department Engineer then reviewed and approved by the Railroad Engineer, with a copy provided to the Company, but such approval shall not relieve the Contractor from liability.
Additionally, a walkway with handrail protection may be required as noted in Section 11 herein.

D. Demolition, Erection, Hoisting:

(1) Tracks owned by Company and operated by Railroad, other Company corridor or property, or Railroad property must be protected from damage during the procedure.

(2) The Contractor is required to submit a plan showing the locations of cranes, horizontally and vertically, operating radii, with delivery or disposal locations shown. The location of all tracks and other railroad facilities as well as wire lines, poles, adjacent structures, etc., must also be shown.

(3) Crane rating sheets showing cranes to be adequate for 150% of the actual weight of the pick. A complete set of crane charts, including crane, counterweight, and boom nomenclature is to be submitted.

(4) Plans and computations showing the weight of the picks must be submitted. Calculations shall be made from plans of the existing and/or proposed structure showing complete and sufficient details with supporting data for the demolition or erection of the structure. If plans do not exist, lifting weights must be calculated from filed measurements. The field measurements are to be made under the supervision of the Professional Engineer submitting the procedure and calculations.

(5) A data sheet must be submitted listing the types, size and arrangements of all rigging and connection equipment.

(6) A complete written procedure is to be submitted, including the order of lifts, time required for each lift, and any repositioning or rehitching of the crane or cranes.

(7) All erection or demolition plans, procedures, data sheets, etc., submitted must be prepared, signed and sealed by a North Carolina Registered Professional Engineer.

Revised 3-7-13

(8) The Railroad Engineer or his designated representative must be present at the site during the entire demolition and erection procedure period.

(9) All procedures, plans and calculations shall first be reviewed by the Department Engineer and then approved by the Railroad Engineer, with a copy provided to the Company, but such approval does not relieve the Contractor from liability.

E. Blasting:

(1) The Contractor shall obtain advance approval of the Railroad Engineer and Department Engineer for use of explosives on or adjacent to Company corridor, a copy of which will be provided to Company. The request for permission to use explosives shall include a detailed blasting plan. If permission for use of explosives is granted, the Contractor will be required to comply with the following:

(a) Blasting shall be done with light charges under the direct supervision of a responsible officer or employee of the Contractor and a licensed blaster.

(b) Electric detonating fuses shall not be used because of the possibility of premature explosions resulting from operation of two-way train radios.

(c) No blasting shall be done without the presence of the Railroad Engineer or his authorized representative. At least 72-hours advance notice to the person designated in the Railroad's notice of authorization to proceed (see Section 2B above) will be required to arrange for the presence of an authorized Railroad representative and such flagging as the Railroad may require.

(d) Have at the job site adequate equipment, labor, and materials and allow sufficient time to clean up debris resulting from the blasting without delay to trains, as well as correcting at his expense any track misalignment or other damage to Company corridor resulting from the blasting as directed by the Railroad Engineer. If his actions result in delay of trains, the Contractor shall bear the entire cost thereof.

(2) The Railroad Engineer will:

(a) Determine the approximate location of trains and advise the Contractor the approximate amount of time available for the blasting operation and clean-up.

(b) Have the authority to order discontinuance of blasting if, in his opinion, blasting is too hazardous or is not in accord with these Special Provisions.

Revised 3-7-13

F. Maintenance of Railroad Facilities:

(1) The Contractor will be required to maintain all ditches and drainage structures free of silt or other obstructions which may result from his operations and provide and maintain any erosion control measures as required. The Contractor will promptly repair eroded areas within Company's corridor and repair any other damage to the property of the Company or its tenants.

(2) All such maintenance and repair of damages due to the Contractor's operations shall be done at the Contractor's expense.

G. Storage of Materials and Equipment:

Materials and equipment shall not be stored where they will interfere with Railroad operations, nor on the corridor of the Company without first having obtained permission from the Railroad Engineer and the Company, and such permission will be with the understanding that neither the Company nor Railroad will be liable for damage to such material and equipment from any cause and that the Railroad Engineer may move or require the Contractor to move, at the Contractor's expense, such material and equipment.

All grading or construction machinery that is left parked near the track unattended by a watchman shall be effectively immobilized so that it cannot be moved by unauthorized persons. The Contractor shall protect, defend, indemnify, and save Company and Railroad, and any associated, controlled or affiliated corporation, harmless from and against all loss, costs, expenses, attorneys' fees, claim or liability for loss of or damage to property or the loss of life or personal injury, arising out of or incident to the Contractor's failure to immobilize grading or construction machinery.

H. Cleanup:

Upon completion of the work, the Contractor shall remove from within the limits of the Company's corridor, all machinery, equipment, surplus materials, falsework, rubbish, or temporary buildings of the Contractor, and leave said corridor in a neat condition satisfactory to the Chief Engineer of the Railroad or his authorized representative and satisfactory to the Company's authorized representative. Cleanup also includes removal, replacement, or cleaning of soiled or contaminated ballast in the construction area

6. DAMAGES:

A. The Contractor shall assume all liability for any and all damages to his work, employees, servants, equipment, and materials caused by Railroad traffic.

B. Any cost incurred by the Company or Railroad for repairing damages to its corridor or to property of its tenants, caused by or resulting from the operations of the Contractor, shall be paid directly to the Company or Railroad by the Contractor.

Revised 3-7-13

7. FLAGGING SERVICES:

A. Requirements:

Flagging services will not be provided until the Contractor's insurance has been reviewed and approved by the Company and Railroad.

Under the terms of the agreement between the Department, Company, and Railroad, the Railroad has sole authority to determine the need for flagging required to protect its operations. In general, the requirements of such services will be whenever the Contractor's men or equipment are, or are likely to be, working on the Company's corridor, or across, over, adjacent to or under a track, or when such work has disturbed or is likely to disturb a Company structure, Company roadbed, or surface and alignment of any track to such extent that the movement of trains must be controlled by flagging.

Normally, the Railroad will assign one flagman to a project, but in some cases, more than one may be necessary, such as yard limits where three (3) flagmen may be required. However, if the Contractor works within distances which violate instructions given by the Railroad Engineer or performs work that has not been scheduled with the Railroad Engineer, a flagman, or flagmen may be required full time until the project has been completed. Should such violations or unscheduled, unauthorized work by the Contractor result in full time flagging being required by the Railroad, the additional cost of such flagging above normal flagging cost shall be deducted from the final payment to the Contractor as provided in Article 109-9 of the Standard Specifications. Neither the Department, Company, nor Railroad will be liable for damages resulting from unscheduled or unauthorized work.

B. Scheduling and Notification:

(1) The Contractor's work requiring railroad flagging should be scheduled to limit the presence of a flagman at the site to a maximum of 50 hours per week. The Contractor shall request Railroad approval of work schedules requiring a flagman presence in excess of 40 hours per week.

(2) No later than the time that approval is initially requested to begin work on Company corridor, the Contractor shall furnish to the Department, Company, and Railroad a schedule for all work required to complete the portion of the project within Company corridor and arrange for a job site meeting between the Contractor, Department, and Railroad. Flagman or flagmen may not be provided until the job site meeting has been conducted and the Contractor's work scheduled.

(3) The Contractor will be required to give the Railroad Engineer at least 10 working days of advance written notice of intent to begin work within Company's corridor in accordance with these Special Provisions. Once begun, when such work is then suspended at any time, or for any reason, the Contractor will be required to give the Railroad Engineer at least 3 working days of advance notice before resuming work on Company's corridor. Such notices shall include sufficient details of the proposed work to enable the Railroad Engineer to determine if flagging will be required. If such notice is in writing, the Contractor shall furnish the Department Engineer a

copy; if notice is given verbally, it shall be confirmed in writing with a copy to the Department Engineer.

(4) If flagging is required, no work shall be undertaken until the flagman, or flagmen, is present at the job site. It may take up to 30 days to obtain flagging initially from the Railroad. When flagging begins, the flagman is usually assigned by the Railroad to work at the project site on a continual basis until no longer needed and cannot be called for on a spot basis. If flagging becomes unnecessary and is suspended, it may take up to 30 days to again obtain from the Railroad. Due to labor agreements, it is necessary to give 5 working days notice before flagging service may be discontinued and responsibility for payment stopped.

(5) If, after the flagman is assigned to the project site, emergencies arise which require the flagman's presence elsewhere, the Contractor shall delay work on Company's corridor until such time as the flagman is again available. Any additional costs resulting from such delay shall be borne by the Contractor and not the Department, Company, or Railroad.

C. Payment:

(1) The Department will be responsible for paying the Railroad directly for any and all costs of flagging which may be required to accomplish the construction. The Contractor shall reimburse the Railroad for any costs of the flagging which is required for work for the benefit of the Contractor.

(2) The estimated cost of flagging service is the current rate per day based on a 10-hour work day. This cost includes the base pay for each flagman, overhead, and a per diem charge for travel expenses, meals, and lodging. The charge by the Railroad will be the actual cost based on the rate of pay for the Railroad's employees who are available for flagging service at the time the service is required.

(3) Work by a flagman in excess of 8 hours per day or 40 hours per week, but not more than 12 hours a day will result in overtime pay at 1½ times the appropriate rate. Work by a flagman in excess of 12 hours per day will result in overtime pay at 2 times the appropriate rate. If work is performed on a holiday, the flagging rate is 2½ times the normal rate.

(4) Railroad work involved in preparing and handling bills will also be charged to the Department. Charges to the Department by the Railroad shall be in accordance with applicable provisions of the Federal-Aid Policy Guide, Title 23 Subchapter B, Part 140I and Subchapter G, Part 646B issued by the Federal Highway Administration on December 9, 1991, including all current amendments. Flagging costs are subject to change. The above estimates of flagging costs are provided for information only and are not binding in any way.

Revised 3-7-13

D. Verification:

(1) Railroad's flagman will electronically enter flagging time via Railroad's electronic billing system. Any complaints concerning flagman or flagmen must be resolved in a timely manner. If need for flagman or flagmen is questioned, please contact Railroad's System Engineer of Public Improvements at (404) 529-1641. All verbal complaints must be confirmed in writing by the Contractor within 5 working days with copy to the Department Engineer. Address all written correspondence to:

Office of Chief Engineer-Bridges & Structures
Attn: System Engineer of Public Improvements
Norfolk Southern Corporation
1200 Peachtree Street, NE
Internal Box 142
Atlanta, Georgia 30309

(2) The Railroad flagman assigned to the project will be responsible for notifying the Department Engineer upon arrival at the job site on the first day, or as soon thereafter as possible, that flagging services begin and on the last day that he performs such services for each separate period that services are provided. The Department Engineer will document such notification and general flagging times for verification purposes in the project records. When requested, the Department Engineer will also sign the flagman's diary showing daily time spent and activity at the project site. Also if requested, the flagman will cooperate with the Department by submitting daily timesheets or signing the Department Engineer's diary showing daily time spent at the project site.

8. HAUL ACROSS RAILROADS:

A. Where the plans show or imply that materials of any nature must be hauled across a railroad track, unless the plans clearly show that the Department has included arrangements for such haul in its agreement with the Railroad, the Contractor will be required to make all necessary arrangements with the Railroad regarding means of transporting such materials across the railroad track. The Contractor will be required to bear all costs incidental, including flagging, to such crossings whether services are performed by his own forces or by Railroad personnel.

B. No crossing may be established for use of the Contractor for transporting materials or equipment across the railroad tracks of the Company unless specific authority for its installation, maintenance, necessary watching and flagging thereof and removal, all at the expense of the Contractor, must first obtain a temporary private crossing agreement from the Railroad Engineer and the Company. The approval process for a temporary private crossing agreement executed between the Contractor, Railroad, and Company normally takes 90 days.

Revised 3-7-13

9. WORK FOR THE BENEFIT OF THE CONTRACTOR:

A. All temporary or permanent changes in wire lines or other facilities which are considered necessary to the project are shown on the plans and included in the force account agreement between the Department, Company, and Railroad; or will be covered by appropriate revisions to same which will be initiated and approved by the Department, Company, and/or Railroad.

B. Should the Contractor desire any changes in addition to the above, he shall make separate arrangements with the Railroad for same to be accomplished at the Contractor's expense.

10. COOPERATION AND DELAYS:

A. It shall be the Contractor's responsibility to arrange a schedule with the Railroad for accomplishing stage construction involving work by the Railroad or licensees of Company. In arranging his schedule, he shall ascertain from the Railroad the lead time required for assembling crews and materials and shall make due allowance therefore. The Contractor shall cooperate with others in the construction of the project to the end that all work may be accomplished to the best advantage.

B. No charge or claims of the Contractor against the Department, Company, or Railroad will be allowed for hindrance or delay on account of railroad traffic, any work done by the Railroad, or other delay incident to or necessary for safe maintenance of railroad traffic or for any delays due to compliance with these Special Provisions.

C. The Contractor's attention is called to the fact that neither the Department, Company, nor Railroad assumes any responsibility for any work performed by others in connection with the construction of the project, and the Contractor shall have no claim whatsoever against the Department, Company, or Railroad for any inconvenience, delay, or additional cost incurred by him on account of such operations by others.

11. TRAINMAN'S WALKWAYS:

Along the outer side of each exterior track of multiple operated tracks, and on each side of single operated track, an unobstructed continuous space suitable for trainman's use in walking along trains, extending to a line not less than 10' from centerline of track, shall be maintained. Any temporary impediments to walkways and track drainage encroachments or obstructions allowed during work hours while Railroad's protective service is provided shall be removed before the close of each work day. If there is any excavation near the walkway, a handrail, with 10'-0" minimum clearance from centerline of track, shall be placed.

Revised 3-7-13

12. GUIDELINES FOR PERSONNEL ON COMPANY'S CORRIDOR:

A. All persons shall wear hard hats. Appropriate eye and hearing protection must be used. Working in shorts is prohibited. Shirts must cover shoulders, back, and abdomen. Working in tennis or jogging shoes, sandals, boots with high heels, and cowboy and other slip-on type boots is prohibited. Hard-sole, lace-up footwear, zippered boots, or boots cinched up with straps which fit snugly about the ankle are adequate. Wearing safety boots is strongly recommended. In the vicinity of at-grade crossings, it is strongly recommended to wear reflective vests.

B. No one is allowed within 25' of the centerline of track without specific authorization from the flagman.

C. All persons working near track while train is passing are to lookout for dragging bands, chains and protruding or shifted cargo.

D. No one is allowed to cross tracks without specific authorization from the flagman.

E. All welders and cutting torches working within 25' of track must stop when train is passing.

F. No steel tape or chain will be allowed to cross or touch rails without permission.

13. GUIDELINES FOR EQUIPMENT ON COMPANY'S CORRIDOR:

A. No crane or boom equipment will be allowed to set up to work or park within boom distance plus 15' of centerline of track without specific permission from Railroad Engineer and flagman.

B. No crane or boom equipment will be allowed to foul track or lift a load over the track without flag protection and track time.

C. All employees will stay with their machines when crane or boom equipment is pointed toward track.

D. All cranes and boom equipment under load will stop work while train is passing, including pile driving.

E. Swinging loads must be secured to prevent movement while train is passing.

F. No loads will be suspended above a moving train.

G. No equipment will be allowed within 25' of centerline of track without specific authorization of the flagman.

H. Trucks, tractors, or any equipment will not touch ballast line without specific permission from railroad official and flagman.

Revised 3-7-13

I. No equipment or load movement within 25' or above a standing train or railroad equipment without specific authorization of the flagman.

J. All operating equipment within 25' of track must halt operations when a train is passing. All other operating equipment may be halted by the flagman if the flagman views the operation to be dangerous to the passing train.

K. All equipment, loads, and cables are prohibited from touching rails.

L. While clearing and grubbing, no vegetation will be removed from Railroad embankment with heavy equipment without specific permission from the Railroad Engineer and flagman.

M. No equipment or materials will be parked or stored on Company's corridor unless specific authorization is granted from the Railroad Engineer.

N. All unattended equipment that is left parked on Company's corridor shall be effectively immobilized so that it cannot be moved by unauthorized persons.

O. All cranes and boom equipment will be turned away from track after each work day or whenever unattended by an operator.

Revised 3-7-13

14. INSURANCE:

A. In addition to any other forms of insurance or bonds required under the terms of the contract and specifications, the Prime Contractor will be required to provide coverage conforming to the requirements of the Federal-Aid Policy Guide outlined under Title 23 Subchapter G, Part 646A for all work to be performed on Company's corridor by carrying insurance of the following kinds and amounts:

(1) **Commercial General Liability Insurance** having a combined single limit of not less than $2,000,000 per occurrence for all loss, damage, cost, and expense, including attorneys' fees, arising out of bodily injury liability and property damage liability during the policy period. Said policy shall include explosion, collapse, and underground hazard (XCU) coverage, shall be endorsed to name Company and Railroad specified in Section 14A2(c) below both as the certificate holder and as an additional insured, and shall include a severability of interests provision.

(2) **Railroad Protective Liability Insurance** having a combined single limit of not less than $2,000,000 each occurrence and $6,000,000 in the aggregate applying separately to each annual period. If the project involves track over which passenger trains operate, the insurance limits required are not less than a combined single limit of $5,000,000 each occurrence and $10,000,000 in the aggregate applying separately to each annual period. Said policies shall provide coverage for all loss, damage, or expense arising from bodily injury and property damage liability, and physical damage to property attributed to acts or omissions at the job site.

The standards for the Railroad Protective Liability Insurance are as follows:

(a) The insurer must be rated A- or better by A.M. Best Company, Inc.

(b) The policies must be written using one of the following combinations of Insurance Services Office (ISO) Railroad Protective Liability Insurance Form Numbers:

(1) CG 00 35 01 96 and CG 28 31 10 93; or
(2) CG 00 35 07 98 and CG 28 31 07 98; or
(3) CG 00 35 10 01; or
(4) CG 00 35 12 04.

(c) The named insured on each policy as required to be issued to each Company and to Railroad shall read: (NOTE: The below insured is to be treated separately as an insured on each railroad protective policy for a total of (2) two separate policies being issued.)

North Carolina Railroad Company
2809 Highwoods Boulevard, Suite 100
Raleigh, North Carolina 27604-1000
ATTN: Property Department; and

Norfolk Southern Railway Company
Three Commercial Place
Norfolk, Virginia 23510-2191
ATTN: Risk Management

(d) The description of operations must appear on the Declarations, must match the project description in this agreement, and must include the appropriate Department project and contract identification numbers.

The Description and Designation shall read as follows:

Construction of a new overhead bridge on Peeler Road (SR 2538) over the tracks owned by North Carolina Railroad Company and operated by Norfolk Southern Railway Company in Rowan County, North Carolina, identified as State TIP P-5206A and Federal Project FRA-FR-HSR-0006-10-01-00.

(e) The job location must appear on the Declarations and must include the city, state, and appropriate highway name/number.

NOTE: Do not include any references to milepost on the insurance policy.

(f) The name and address of the prime contractor must appear on the Declarations.

(g) The name and address of the Department must be identified on the Declarations as the "Involved Governmental Authority or Other Contracting Party."

(h) Other endorsements/forms that will be accepted are:

(1) Broad Form Nuclear Exclusion – Form IL 00 21;
(2) 30-day Advance Notice of Non-renewal or cancellation;
(3) 60-day written notice to the Department prior to cancellation or change; and/or
(4) Quick Reference or Index Form CL/IL 240.

(i) Endorsements/forms that are **NOT** acceptable are:

(1) Any Pollution Exclusion Endorsement except CG 28 31;
(2) Any Punitive or Exemplary Damages Exclusion;

Revised 3-7-13

(3) Known injury or Damage Exclusion form CG 00 59;
(4) Any Common Policy Conditions form; and/or
(5) Any other endorsement/form not specifically authorized in Section 14A2(h) above.

B. If any part of the work is sublet, similar insurance, and evidence thereof as specified in Section 14A1 above, shall be provided by or on behalf of the subcontractor to cover its operations on Company's corridor. As an alternative, the Prime Contractor may provide insurance for the subcontractor by means of separate and individual policies.

C. Prior to entry on Company's corridor, the original and one duplicate copy of the Railroad Protective Liability Insurance Policy shall be submitted by the Prime Contractor to the Department at the address below for its review and transmittal to the Company and Railroad. In addition, certificates of insurance evidencing the Prime Contractor's and any subcontractors' Commercial General Liability Insurance shall be issued to the Department, Company, and Railroad at the addresses below, and one certified copy of the Prime Contractor and any Subcontractor's policy is to be forwarded to the Department for its review and transmittal to the Company and Railroad. All policies and certificates of insurance shall state that the insurance coverage will not be suspended, voided, canceled, or reduced in coverage or limits without (30) days advance written notice to the Department, Company, and Railroad. The Railroad will not permit any work on Company's corridor until the Company and Railroad has reviewed and approved the evidence of insurance required herein.

D.

DEPARTMENT:
Assistant Director
Planning & Development
NCDOT Rail Division
1556 Mail Service Center
Raleigh, NC 27699-1556

RAILROAD:
Risk Management
Norfolk Southern Railway Company
Three Commercial Place
Norfolk, Virginia 23510-2191

COMPANY:
North Carolina Railroad Company
2809 Highwoods Boulevard, Suite 100
Raleigh, North Carolina 27604
ATTN: Property Department

E. The insurance required herein shall in no way serve to limit the liability of Department or its Contractors under the terms of this agreement.

F. The insurance amounts specified are minimum amounts and the Contractor may carry insurance in larger amounts if he so desires. As to "aggregate limits," if the insurer establishes loss reserves equal to or in excess of the aggregate limit specified in any of the required insurance policies, the Contractor shall immediately notify the Department and shall cease all operations until the aggregate limit is reinstated. If the insurer establishes loss reserves equal to or in excess of one/half of the aggregate limit, the Contractor shall arrange to restore the aggregate limit to at least the minimum amount stated in these requirements. Any insurance policies and certificates taken out and furnished due to these requirements shall be approved by the Department, Company, and Railroad as to form and amount prior to beginning work on Company's corridor.

G. All insurance herein before specified shall be carried until the final inspection and acceptance of the project by the Department, Company and Railroad, or acceptance of that portion of the project within Company's corridor. At this point, no work or any other activities by the Contractor shall take place in Company's corridor without written permission from the Department, Company, and Railroad.

15. FAILURE TO COMPLY:

A. In the event the Contractor violates or fails to comply with any of the requirements of these Special Provisions:

(1) The Railroad Engineer may require that the Contractor vacate Company's corridor; and

(2) The Department Engineer may withhold all monies due the Contractor on monthly statements.

Any such orders shall remain in effect until the Contractor has remedied the situation to the satisfaction of the Department Engineer and Railroad Engineer.

16. PAYMENT FOR COST OF COMPLIANCE:

No separate payment will be made for any extra cost incurred on account of compliance with these Special Provisions. All such cost shall be included in the various prices bid to perform the work.

Revised 3-7-13

17. COMPLETION AND ACCEPTANCE:

Upon completion of the work, the Contractor shall remove from within the limits of the Company's corridor all machinery, equipment, surplus materials, rubbish, or temporary buildings of the Contractor, and leave said corridor in a neat and orderly condition. After the final inspection has been made and work found to be completed in a satisfactory manner acceptable to the Department, Company, and Railroad, the Department will be notified of the Railroad's acceptance in writing by the Railroad's Chief Engineer or his authorized representative within ten (10) days or as soon thereafter as practicable.

P-5206A

Railroad Site Data:

The following information was received from the Railroad on Jan 28, 2013, and is provided as a convenience to the Contractor in bidding this project. This information is subject to change and the Contractor may, at his discretion, contact the Railroad directly to verify its current accuracy. Since this information is shown as a convenience to the Contractor, but is subject to change, the Contractor shall have no claims whatsoever against either the Railroad or the Department of Transportation for any delays or additional costs incurred based on changes in this information which occur after the above date of receipt.

Type and number of tracks within 50 ft. of project (mainline, branchline, siding, yard, etc.).

1 - Mainline

Number of trains on affected track per day.

46

Type of trains (passenger or freight).

6 - Passenger
40 - Freight

Maximum authorized operating speed of trains.

79 mph - Passenger
50mph - Freight

Type and number of RR employees assigned to job.

1 - Flagman

PROJECT SPECIAL PROVISION

(10-18-95) Z-1

PERMITS

The Contractor's attention is directed to the following permits, which have been issued to the Department of Transportation by the authority granting the permit.

PERMIT	AUTHORITY GRANTING THE PERMIT
Dredge and Fill and/or Work in Navigable Waters (404)	U. S. Army Corps of Engineers
Water Quality (401)	Division of Environmental Management, DENR State of North Carolina

The Contractor shall comply with all applicable permit conditions during construction of this project. Those conditions marked by * are the responsibility of the department and the Contractor has no responsibility in accomplishing those conditions.

Agents of the permitting authority will periodically inspect the project for adherence to the permits.

The Contractor's attention is also directed to Articles 107-10 and 107-13 of the *2012 Standard Specifications* and the following:

Should the Contractor propose to utilize construction methods (such as temporary structures or fill in waters and/or wetlands for haul roads, work platforms, cofferdams, etc.) not specifically identified in the permit (individual, general, or nationwide) authorizing the project it shall be the Contractor's responsibility to coordinate with the Engineer to determine what, if any, additional permit action is required. The Contractor shall also be responsible for initiating the request for the authorization of such construction method by the permitting agency. The request shall be submitted through the Engineer. The Contractor shall not utilize the construction method until it is approved by the permitting agency. The request normally takes approximately 60 days to process; however, no extensions of time or additional compensation will be granted for delays resulting from the Contractor's request for approval of construction methods not specifically identified in the permit.

Where construction moratoriums are contained in a permit condition which restricts the Contractor's activities to certain times of the year, those moratoriums will apply only to the portions of the work taking place in the waters or wetlands provided that activities outside those areas is done in such a manner as to not affect the waters or wetlands.

R-2

U.S. ARMY CORPS OF ENGINEERS
WILMINGTON DISTRICT

Action ID. **201201988** County: **Rowan** USGS Quad: **Salisbury**

GENERAL PERMIT (REGIONAL AND NATIONWIDE) VERIFICATION

Property Owner / Authorized Agent: **Marc Hamel / NC DOT Rail Division**
Address: **1553 Mail Service Center**
Raleigh, North Carolina 27699-1553

Telephone No.: **919 707-4705**
Size and location of property (water body, road name/number, town, etc.): **Reid Station to North Kannapolis Station Norfolk Southern rail road adjacent to Town Creek south of Salisbury, Rowan County, North Carolina. TIP P-5206. Town Creek is a tributary of the Yadkin River.**

Description of projects area and activity: **Mechanized landclearing, excavation and the discharge of fill material associated with the construction for existing rail road safety improvements (Peeler Road realignment). The proposed project includes site SF culvert fill resulting in 221 linear feet of permanent stream channel impact and 52 linear feet of temporary stream channel impact; site WI fill resulting in 0.01 acre of permanent wetland fill; and site WJ resulting in 0.10 acre of permanent wetland fill. Total jurisdictional waters impacts for the safety project includes 273 linear feet of stream channel (221 permanent and 52 temporary) and 0.11 acre of wetland impact to the jurisdictional waters of Town Creek.**

Special Condition:

"In order to compensate for 221 linear feet of permanent stream impacts / 0.11 acres of permanent wetlands impacts the permittee shall make payment to the North Carolina Ecosystem Enhancement Program (NCEEP) in the amount determined by the NCEEP, sufficient to perform the restoration of 221 linear feet of warm water stream / 0.22 acres of riparian non-riverine wetlands in the Lower Yadkin River Basin, Cataloging Unit 03040103. Construction within jurisdictional areas on the property may begin upon permit issuance, however within 30 days of permit issuance, NCDOT shall provide written confirmation to the Corps that NCEEP agrees to accept responsibility for the mitigation work required, in compliance with the NCEEP In-Lieu Fee Instrument, approved by the United States Army Corps of Engineers, Wilmington District on July, 28, 2010. Until the Corps receives this confirmation letter from NCEEP, NCDOT remains responsible for this mitigation requirement. If the Corps has not received a confirmation from NCEEP within 150 days of the date of this verification, NCDOT shall provide plans to accomplish the required mitigation to the Corps of Engineers within 210 days of the date of this verification."

Applicable Law: ☒ Section 404 (Clean Water Act, 33 USC 1344)
☐ Section 10 (Rivers and Harbors Act, 33 USC 403)
Authorization: Regional General Permit Number: ____
Nationwide Permit Number: **NW 14 & 33**

Your work is authorized by the above referenced permit provided it is accomplished in strict accordance with the attached conditions and your submitted plans. Any violation of the attached conditions or deviation from your submitted plans may subject the permittee to a stop work order, a restoration order and/or appropriate legal action.

This verification will remain valid until the expiration date identified below unless the nationwide authorization is modified, suspended or revoked. If, prior to the expiration date identified below, the nationwide permit authorization is reissued and/or modified, this verification will remain valid until the expiration date identified below, provided it complies with all requirements of the modified nationwide permit. If the nationwide permit authorization expires or is suspended, revoked, or is modified, such that the activity would no longer comply with the terms and conditions of the nationwide permit, activities which have commenced (i.e., are under construction) or are under contract to commence in reliance upon the nationwide permit, will remain authorized provided the

activity is completed within twelve months of the date of the nationwide permit's expiration, modification or revocation, unless discretionary authority has been exercised on a case-by-case basis to modify, suspend or revoke the authorization.

Activities subject to Section 404 (as indicated above) may also require an individual Section 401 Water Quality Certification. You should contact the NC Division of Water Quality (telephone (919) 733-1786) to determine Section 401 requirements.

For activities occurring within the twenty coastal counties subject to regulation under the Coastal Area Management Act (CAMA), prior to beginning work you must contact the N.C. Division of Coastal Management .

This Department of the Army verification does not relieve the permittee of the responsibility to obtain any other required Federal, State or local approvals/permits.

If there are any questions regarding this verification, any of the conditions of the Permit, or the Corps of Engineers regulatory program, please contact John Thomas @ 919 554-4884 ext. 25.

Corps Regulatory Official _____ Date: **12/13/2012**

Expiration Date of Verification: **12/13/2014**

The Wilmington District is committed to providing the highest level of support to the public. To help us ensure we continue to do so, please complete the attached customer Satisfaction Survey or visit http://www.saw.usace.army.mil/WETLANDS/index.html to complete the survey online.

Determination of Jurisdiction:

☐ Based on preliminary information, there appear to be waters of the US including wetlands within the above described project area. This preliminary determination is not an appealable action under the Regulatory Program Administrative Appeal Process (Reference 33 CFR Part 331).

☐ There are Navigable Waters of the United States within the above described project area subject to the permit requirements of Section 10 of the Rivers and Harbors Act and Section 404 of the Clean Water Act. Unless there is a change in the law or our published regulations, this determination may be relied upon for a period not to exceed five years from the date of this notification.

☒ There are waters of the US and/or wetlands within the above described project area subject to the permit requirements of Section 404 of the Clean Water Act (CWA)(33 USC § 1344). Unless there is a change in the law or our published regulations, this determination may be relied upon for a period not to exceed five years from the date of this notification.

☐ The jurisdictional areas within the above described project area have been identified under a previous action. Please reference jurisdictional determination issued _____. Action ID _____

Basis of Jurisdictional Determination: **Property has tributary which flows to the Yadkin River and the Atlantic Ocean.**

Appeals Information (This information applies only to approved jurisdictional determinations.)

Attached to this verification is an approved jurisdictional determination. If you are not in agreement with that approved jurisdictional determination, you can make an administrative appeal under 33 CFR 331. Enclosed you will find a Notification of Appeal Process (NAP) fact sheet and request for appeal (RFA) form. If you request to appeal this determination you must submit a completed RFA form to the following address:

District Engineer, Wilmington Regulatory Division
Attn:Jean Gibby, Project Manager,
Raleigh Regulatory Field Office
3331 Heritage Trade Drive, Suite 105
Wake Forest, North Carolina 27587

In order for an RFA to be accepted by the Corps, the Corps must determine that it is complete, that it meets the criteria for appeal under 33 CFR part 331.5, and that it has been received by the District Office within 60 days of the date of the NAP. Should you decide to submit an RFA form, it must be received at the above address by **February 13, 2013**.

It is not necessary to submit an RFA form to the District Office if you do not object to the determination in this correspondence.

Corps Regulatory Official: _____
Date **12/13/2012**

SURVEY PLATS, FIELD SKETCH, WETLAND DELINEATION FORMS, PROJECT PLANS, ETC., MUST BE ATTACHED TO THE FILE COPY OF THIS FORM, IF REQUIRED OR AVAILABLE.

Copy Furnished:
Scott Davis, Axiom Environmental, Inc., 218 Snow Avenue, Raleigh, NC 27603

NOTIFICATION OF ADMINISTRATIVE APPEAL OPTIONS AND PROCESS AND REQUEST FOR APPEAL		
Applicant: **Marc Hamel / NC DOT Rail Division**	File Number: SAW 2012 01988	Date: December 13, 2012
Attached is:		See Section below
☐ INITIAL PROFFERED PERMIT (Standard Permit or Letter of permission)		A
☐ PROFFERED PERMIT (Standard Permit or Letter of permission)		B
☐ PERMIT DENIAL		C
☒ APPROVED JURISDICTIONAL DETERMINATION		D
☐ PRELIMINARY JURISDICTIONAL DETERMINATION		E

SECTION I - The following identifies your rights and options regarding an administrative appeal of the above decision. Additional information may be found at http://www.usace.army.mil/inet/functions/cw/cecwo/reg or Corps regulations at 33 CFR Part 331.

A: INITIAL PROFFERED PERMIT: You may accept or object to the permit.

- ACCEPT: If you received a Standard Permit, you may sign the permit document and return it to the district engineer for final authorization. If you received a Letter of Permission (LOP), you may accept the LOP and your work is authorized. Your signature on the Standard Permit or acceptance of the LOP means that you accept the permit in its entirety, and waive all rights to appeal the permit, including its terms and conditions, and approved jurisdictional determinations associated with the permit.
- OBJECT: If you object to the permit (Standard or LOP) because of certain terms and conditions therein, you may request that the permit be modified accordingly. You must complete Section II of this form and return the form to the district engineer. Your objections must be received by the district engineer within 60 days of the date of this notice, or you will forfeit your right to appeal the permit in the future. Upon receipt of your letter, the district engineer will evaluate your objections and may: (a) modify the permit to address all of your concerns, (b) modify the permit to address some of your objections, or (c) not modify the permit having determined that the permit should be issued as previously written. After evaluating your objections, the district engineer will send you a proffered permit for your reconsideration, as indicated in Section B below.

B: PROFFERED PERMIT: You may accept or appeal the permit

- ACCEPT: If you received a Standard Permit, you may sign the permit document and return it to the district engineer for final authorization. If you received a Letter of Permission (LOP), you may accept the LOP and your work is authorized. Your signature on the Standard Permit or acceptance of the LOP means that you accept the permit in its entirety, and waive all rights to appeal the permit, including its terms and conditions, and approved jurisdictional determinations associated with the permit.
- APPEAL: If you choose to decline the proffered permit (Standard or LOP) because of certain terms and conditions therein, you may appeal the declined permit under the Corps of Engineers Administrative Appeal Process by completing Section II of this form and sending the form to the division engineer. This form must be received by the division engineer within 60 days of the date of this notice.

C: PERMIT DENIAL: You may appeal the denial of a permit under the Corps of Engineers Administrative Appeal Process by completing Section II of this form and sending the form to the division engineer. This form must be received by the division engineer within 60 days of the date of this notice.

D: APPROVED JURISDICTIONAL DETERMINATION: You may accept or appeal the approved JD or provide new information.

- ACCEPT: You do not need to notify the Corps to accept an approved JD. Failure to notify the Corps within 60 days of the date of this notice, means that you accept the approved JD in its entirety, and waive all rights to appeal the approved JD.
- APPEAL: If you disagree with the approved JD, you may appeal the approved JD under the Corps of Engineers Administrative Appeal Process by completing Section II of this form and sending the form to the district engineer. This form must be received by the division engineer within 60 days of the date of this notice.

E: PRELIMINARY JURISDICTIONAL DETERMINATION: You do not need to respond to the Corps regarding the preliminary JD. The Preliminary JD is not appealable. If you wish, you may request an approved JD (which may be appealed), by contacting the Corps district for further instruction. Also you may provide new information for further consideration by the Corps to reevaluate the JD.

SECTION II - REQUEST FOR APPEAL or OBJECTIONS TO AN INITIAL PROFFERED PERMIT

REASONS FOR APPEAL OR OBJECTIONS: (Describe your reasons for appealing the decision or your objections to an initial proffered permit in clear concise statements. You may attach additional information to this form to clarify where your reasons or objections are addressed in the administrative record.)

ADDITIONAL INFORMATION: The appeal is limited to a review of the administrative record, the Corps memorandum for the record of the appeal conference or meeting, and any supplemental information that the review officer has determined is needed to clarify the administrative record. Neither the appellant nor the Corps may add new information or analyses to the record. However, you may provide additional information to clarify the location of information that is already in the administrative record.

POINT OF CONTACT FOR QUESTIONS OR INFORMATION:

If you have questions regarding this decision and/or the appeal process you may contact:	If you only have questions regarding the appeal process you may also contact:
John Thomas @ 919 554-4884 ext. 25	Administrative Appeal Review Officer CESAD-ET-CO-R U.S. Army Corps of Engineers, South Atlantic Division 60 Forsyth Street, Room 9M15 Atlanta, Georgia 30303-8801

RIGHT OF ENTRY: Your signature below grants the right of entry to Corps of Engineers personnel, and any government consultants, to conduct investigations of the project site during the course of the appeal process. You will be provided a 15 day notice of any site investigation, and will have the opportunity to participate in all site investigations.

	Date:	Telephone number:
_____ Signature of appellant or agent.		

For appeals on Initial Proffered Permits and approved Jurisdictional Determinations send this form to:

District Engineer, Wilmington Regulatory Division, Attn:Jean Gibby, Project Manager, Raleigh Regulatory Field Office, 3331 Heritage Trade Drive, Suite 105, Wake Forest , North Carolina 27587

R-7

For Permit denials and Proffered Permits send this form to:

Division Engineer, Commander, U.S. Army Engineer Division, South Atlantic, Administrative Appeal Officer, CESAD-ET-CO-R, 60 Forsyth Street, Room 9M15, Atlanta, Georgia 30303-8801

R-8

Action ID Number: SAW 2012 01988 **County:** Rowan

Permittee: Marc Hamel / NC DOT Rail Division

Date Verification Issued: December 13, 2012

Project Manager: John Thomas

Upon completion of the activity authorized by this permit and any mitigation required by the permit, sign this certification and return it to the following address:

US ARMY CORPS OF ENGINEERS
WILMINGTON DISTRICT
Raleigh REGULATORY FIELD OFFICE
3331 Heritage Trade Drive
Wake Forest, NORTH CAROLINA 27587

Please note that your permitted activity is subject to a compliance inspection by a U. S. Army Corps of Engineers representative. If you fail to comply with this permit you are subject to permit suspension, modification, or revocation.

I hereby certify that the work authorized by the above referenced permit has been completed in accordance with the terms and condition of the said permit, and required mitigation was completed in accordance with the permit conditions.

_____ _____

Signature of Permittee **Date**

R-9

U.S. ARMY CORPS OF ENGINEERS
Wilmington District
Compensatory Mitigation Responsibility Transfer Form

Permittee: North Carolina Department of Transportation, Rail Division **Action ID:** SAW- 201201988
Project Name: Reid Station to North Kannapolis Station safety upgrades TIP P-5206 **County:** Rowan

Instructions to Permittee: The Permittee must provide a copy of this form to the Mitigation Sponsor, either an approved Mitigation Bank or the North Carolina Ecosystem Enhancement Program (NCEEP), who will then sign the form to verify the transfer of the mitigation responsibility. Once the Sponsor has signed this form, it is the Permittee's responsibility to ensure that to the U.S. Army Corps of Engineers (USACE) Project Manager identified on page two is in receipt of a signed copy of this form before conducting authorized impacts, unless otherwise specified below. If more than one mitigation Sponsor will be used to provide the mitigation associated with the permit, or if the impacts and/or the mitigation will occur in more than one 8-digit Hydrologic Unit Code (HUC), multiple forms will be attached to the permit, and the separate forms for each Sponsor and/or HUC must be provided to the appropriate mitigation Sponsors.

Instructions to Sponsor: The Sponsor must verify that the mitigation requirements shown below are available at the identified site. By signing below, the Sponsor is accepting full responsibility for the identified mitigation, regardless of whether or not they have received payment from the Permittee. Once the form is signed, the Sponsor must update the appropriate ledger and provide a copy of the signed form to the Permittee and to the USACE Bank/In-Lieu Fee Program Manager. The Sponsor must also comply with all reporting requirements established in their authorizing instrument.

Permitted Impacts and Compensatory Mitigation Requirements:

Permitted Impacts Requiring Mitigation* **8-digit HUC and Basin: 03040103, Lower Yadkin River Basin**

Stream Impacts (linear feet)			Wetland Impacts (acres)			
Warm	Cool	Cold	Riparian Riverine	Riparian Non-riverine	Non-Riparian	Coastal
221				0.11		

*If more than one mitigation sponsor will be used for the permit, only include impacts to be mitigated by this sponsor.

Compensatory Mitigation Requirements: **8-digit HUC and Basin:** 03040103 Lower Yadkin River Basin

Stream Mitigation (credits)			Wetland Mitigation (credits)			
Warm	Cool	Cold	Riparian Riverine	Riparian Non-riverine	Non-Riparian	Coastal
221				0.22		

Mitigation Site Debited: NCEEP
(List the name of the bank to be debited. For umbrella banks, also list the specific site. For NCEEP, list NCEEP. If the NCEEP acceptance letter identifies a specific site, also list the specific site to be debited).

Section to be completed by the Mitigation Sponsor

Statement of Mitigation Liability Acceptance: I, the undersigned, verify that I am authorized to approve mitigation transactions for the Mitigation Sponsor shown below, and I certify that the Sponsor agrees to accept full responsibility for providing the mitigation identified in this document (see the table above), associated with the USACE Permittee and Action ID number shown. I also verify that released credits (and/or advance credits for NCEEP), as approved by the USACE, are currently available at the mitigation site identified above. Further, I understand that if the Sponsor fails to provide the required compensatory mitigation, the USACE Wilmington District Engineer may pursue measures against the Sponsor to ensure compliance associated with the mitigation requirements.

Mitigation Sponsor Name: _____

Name of Sponsor's Authorized Representative: _____

_____ _____
Signature of Sponsor's Authorized Representative **Date of Signature**

USACE Wilmington District
Compensatory Mitigation Responsibility Transfer Form, Page 2

Conditions for Transfer of Compensatory Mitigation Credit:

- Once this document has been signed by the Mitigation Sponsor and the USACE is in receipt of the signed form, the Permittee is no longer responsible for providing the mitigation identified in this form, though the Permittee remains responsible for any other mitigation requirements stated in the permit conditions.
- Construction within jurisdictional areas authorized by the permit identified on page one of this form can begin only after the USACE is in receipt of a copy of this document signed by the Sponsor, confirming that the Sponsor has accepted responsibility for providing the mitigation requirements listed herein. For authorized impacts conducted by the North Carolina Department of Transportation (NCDOT), construction within jurisdictional areas may proceed upon permit issuance; however, a copy of this form signed by the Sponsor must be provided to the USACE within 30 days of permit issuance. NCDOT remains fully responsible for the mitigation until the USACE has received this form, confirming that the Sponsor has accepted responsibility for providing the mitigation requirements listed herein.
- Signed copies of this document must be retained by the Permittee, Mitigation Sponsor, and in the USACE administrative records for both the permit and the Bank/ILF Instrument. It is the Permittee's responsibility to ensure that the USACE Project Manager (address below) is provided with a signed copy of this form.
- If changes are proposed to the type, amount, or location of mitigation after this form has been signed and returned to the USACE, the Sponsor must obtain case-by-case approval from the USACE Project Manager and/or North Carolina Interagency Review Team (NCIRT). If approved, higher mitigation ratios may be applied, as per current District guidance and a new version of this form must be completed and included in the USACE administrative records for both the permit and the Bank/ILF Instrument.

Comments/Additional Conditions:

This form is not valid unless signed by the mitigation Sponsor and USACE Project Manager. For questions regarding this form or any of the conditions of the permit authorization, contact the Project Manager at the address below.

USACE Project Manager: **John Thomas**
USACE Field Office: **Raleigh Regulatory Field Office**
US Army Corps of Engineers
3331 Heritage Trade Drive, Suite 105
Wake Forest, North Carolina 27587
Email: **john.t.thomas.jr@saw02.usace.army.mil**

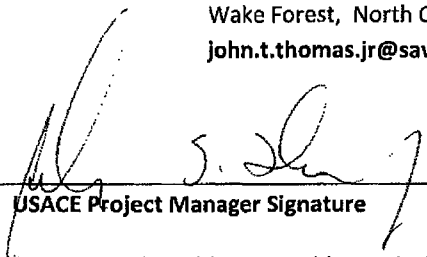

USACE Project Manager Signature

December 13, 2012
Date of Signature

Current Wilmington District mitigation guidance, including information on mitigation ratios, functional assessments, and mitigation bank location and availability, and credit classifications (including stream temperature and wetland groupings) is available at http://ribits.usace.army.mil.

The Wilmington District is committed to providing the highest level of support to the public. To help us ensure we continue to do so, please complete the Customer Satisfaction Survey located at our website at http://regulatory.usacesurvey.com/ to complete the survey online.

R-11

NATIONWIDE PERMIT 14
DEPARTMENT OF THE ARMY
CORPS OF ENGINEERS
FINAL NOTICE OF ISSUANCE AND MODIFICATION OF NATIONWIDE PERMITS
FEDERAL REGISTER
AUTHORIZED MARCH 19, 2012

Linear Transportation Projects. Activities required for the construction, expansion, modification, or improvement of linear transportation projects (e.g., roads, highways, railways, trails, airport runways, and taxiways) in waters of the United States. For linear transportation projects in non-tidal waters, the discharge cannot cause the loss of greater than 1/2-acre of waters of the United States. For linear transportation projects in tidal waters, the discharge cannot cause the loss of greater than 1/3-acre of waters of the United States. Any stream channel modification, including bank stabilization, is limited to the minimum necessary to construct or protect the linear transportation project; such modifications must be in the immediate vicinity of the project.

This NWP also authorizes temporary structures, fills, and work necessary to construct the linear transportation project. Appropriate measures must be taken to maintain normal downstream flows and minimize flooding to the maximum extent practicable, when temporary structures, work, and discharges, including cofferdams, are necessary for construction activities, access fills, or dewatering of construction sites. Temporary fills must consist of materials, and be placed in a manner, that will not be eroded by expected high flows. Temporary fills must be removed in their entirety and the affected areas returned to pre-construction elevations. The areas affected by temporary fills must be revegetated, as appropriate.

This NWP cannot be used to authorize non-linear features commonly associated with transportation projects, such as vehicle maintenance or storage buildings, parking lots, train stations, or aircraft hangars.

* Notification: The permittee must submit a pre-construction notification to the district engineer prior to commencing the activity if: (1) the loss of waters of the United States exceeds 1/10-acre; or (2) there is a discharge in a special aquatic site, including wetlands. (See general condition 31.) (Sections 10 and 404)

Note: Some discharges for the construction of farm roads or forest roads, or temporary roads for moving mining equipment, may qualify for an exemption under Section 404(f) of the Clean Water Act (see 33 CFR 323.4).

R-12

NATIONWIDE PERMIT 33
DEPARTMENT OF THE ARMY
CORPS OF ENGINEERS
FINAL NOTICE OF ISSUANCE AND MODIFICATION OF NATIONWIDE PERMITS
FEDERAL REGISTER
AUTHORIZED MARCH 19, 2012

Temporary Construction, Access, and Dewatering. Temporary structures, work, and discharges, including cofferdams, necessary for construction activities or access fills or dewatering of construction sites, provided that the associated primary activity is authorized by the Corps of Engineers or the U.S. Coast Guard. This NWP also authorizes temporary structures, work, and discharges, including cofferdams, necessary for construction activities not otherwise subject to the Corps or U.S. Coast Guard permit requirements. Appropriate measures must be taken to maintain near normal downstream flows and to minimize flooding. Fill must consist of materials, and be placed in a manner, that will not be eroded by expected high flows. The use of dredged material may be allowed if the district engineer determines that it will not cause more than minimal adverse effects on aquatic resources. Following completion of construction, temporary fill must be entirely removed to an area that has no waters of the United States, dredged material must be returned to its original location, and the affected areas must be restored to pre-construction elevations. The affected areas must also be revegetated, as appropriate. This permit does not authorize the use of cofferdams to dewater wetlands or other aquatic areas to change their use. Structures left in place after construction is completed require a separate section 10 permit if located in navigable waters of the United States. (See 33 CFR part 322.)

* Notification: The permittee must submit a pre-construction notification to the district engineer prior to commencing the activity (see general condition 31). The pre-construction notification must include a restoration plan showing how all temporary fills and structures will be removed and the area restored to pre-project conditions. (Sections 10 and 404)

R-13

NATIONWIDE PERMIT CONDITIONS

The following General Conditions must be followed in order for any authorization by a NWP to be valid:

1. Navigation. (a) No activity may cause more than a minimal adverse effect on navigation.

(b) Any safety lights and signals prescribed by the U.S. Coast Guard, through regulations or otherwise, must be installed and maintained at the permittee's expense on authorized facilities in navigable waters of the United States.

(c) The permittee understands and agrees that, if future operations by the United States require the removal, relocation, or other alteration, of the structure or work herein authorized, or if, in the opinion of the Secretary of the Army or his authorized representative, said structure or work shall cause unreasonable obstruction to the free navigation of the navigable waters, the permittee will be required, upon due notice from the Corps of Engineers, to remove, relocate, or alter the structural work or obstructions caused thereby, without expense to the United States. No claim shall be made against the United States on account of any such removal or alteration.

2. Aquatic Life Movements. No activity may substantially disrupt the necessary life cycle movements of those species of aquatic life indigenous to the waterbody, including those species that normally migrate through the area, unless the activity's primary purpose is to impound water. All permanent and temporary crossings of waterbodies shall be suitably culverted, bridged, or otherwise designed and constructed to maintain low flows to sustain the movement of those aquatic species.

3. Spawning Areas. Activities in spawning areas during spawning seasons must be avoided to the maximum extent practicable. Activities that result in the physical destruction (e.g., through excavation, fill, or downstream smothering by substantial turbidity) of an important spawning area are not authorized.

4. Migratory Bird Breeding Areas. Activities in waters of the United States that serve as breeding areas for migratory birds must be avoided to the maximum extent practicable.

5. Shellfish Beds. No activity may occur in areas of concentrated shellfish populations, unless the activity is directly related to a shellfish harvesting activity authorized by NWPs 4 and 48, or is a shellfish seeding or habitat restoration activity authorized by NWP 27.

6. Suitable Material. No activity may use unsuitable material (e.g., trash, debris, car bodies, asphalt, etc.). Material used for construction or discharged must be free from toxic pollutants in toxic amounts (see Section 307 of the Clean Water Act).

7. Water Supply Intakes. No activity may occur in the proximity of a public water supply intake, except where the activity is for the repair or improvement of public water supply intake structures or adjacent bank stabilization.

8. Adverse Effects From Impoundments. If the activity creates an impoundment of water, adverse effects to the aquatic system due to accelerating the passage of water, and/or restricting its flow must be minimized to the maximum extent practicable.

9. Management of Water Flows. To the maximum extent practicable, the pre-construction course, condition, capacity, and location of open waters must be maintained for each activity, including stream channelization and storm water management activities, except as provided below. The activity must be constructed to withstand expected high flows. The activity must not restrict or impede the passage of normal or high flows, unless the primary purpose of the activity is to impound water or manage high flows. The activity may alter the pre-construction course, condition, capacity, and location of open waters if it benefits the aquatic environment (e.g., stream restoration or relocation activities).

10. Fills Within 100-Year Floodplains. The activity must comply with applicable FEMA-approved state or local floodplain management requirements.

11. Equipment. Heavy equipment working in wetlands or mudflats must be placed on mats, or other measures must be taken to minimize soil disturbance.

12. Soil Erosion and Sediment Controls. Appropriate soil erosion and sediment controls must be used and maintained in effective operating condition during construction, and all exposed soil and other fills, as well as any work below the ordinary high water mark or high tide line, must be permanently stabilized at the earliest practicable date. Permittees are encouraged to perform work within waters of the United States during periods of low-flow or no-flow.

13. Removal of Temporary Fills. Temporary fills must be removed in their entirety and the affected areas returned to pre-construction elevations. The affected areas must be revegetated, as appropriate.

14. Proper Maintenance. Any authorized structure or fill shall be properly maintained, including maintenance to ensure public safety and compliance with applicable NWP general conditions, as well as any activity-specific conditions added by the district engineer to an NWP authorization.

15. Single and Complete Project. The activity must be a single and complete project. The same NWP cannot be used more than once for the same single and complete project.

16. Wild and Scenic Rivers. No activity may occur in a component of the National Wild and Scenic River System, or in a river officially designated by Congress as a "study river" for possible inclusion in the system while the river is in an official study status, unless the appropriate Federal agency with direct management responsibility for such river, has determined in writing that the proposed activity will not adversely affect the Wild and Scenic River designation or study status. Information on Wild and Scenic Rivers may be obtained from the appropriate Federal land management agency responsible for the designated Wild and Scenic River or study river (e.g., National Park Service, U.S. Forest Service, Bureau of Land Management, U.S. Fish and Wildlife Service).

R-15

17. Tribal Rights. No activity or its operation may impair reserved tribal rights, including, but not limited to, reserved water rights and treaty fishing and hunting rights.

18. Endangered Species. (a) No activity is authorized under any NWP which is likely to directly or indirectly jeopardize the continued existence of a threatened or endangered species or a species proposed for such designation, as identified under the Federal Endangered Species Act (ESA), or which will directly or indirectly destroy or adversely modify the critical habitat of such species. No activity is authorized under any NWP which "may affect" a listed species or critical habitat, unless Section 7 consultation addressing the effects of the proposed activity has been completed.

(b) Federal agencies should follow their own procedures for complying with the requirements of the ESA. Federal permittees must provide the district engineer with the appropriate documentation to demonstrate compliance with those requirements. The district engineer will review the documentation and determine whether it is sufficient to address ESA compliance for the NWP activity, or whether additional ESA consultation is necessary.

* (c) Non-federal permittees must submit a pre-construction notification to the district engineer if any listed species or designated critical habitat might be affected or is in the vicinity of the project, or if the project is located in designated critical habitat, and shall not begin work on the activity until notified by the district engineer that the requirements of the ESA have been satisfied and that the activity is authorized. For activities that might affect Federally-listed endangered or threatened species or designated critical habitat, the pre-construction notification must include the name(s) of the endangered or threatened species that might be affected by the proposed work or that utilize the designated critical habitat that might be affected by the proposed work. The district engineer will determine whether the proposed activity "may affect" or will have "no effect" to listed species and designated critical habitat and will notify the non-Federal applicant of the Corps' determination within 45 days of receipt of a complete pre-construction notification. In cases where the non-Federal applicant has identified listed species or critical habitat that might be affected or is in the vicinity of the project, and has so notified the Corps, the applicant shall not begin work until the Corps has provided notification the proposed activities will have "no effect" on listed species or critical habitat, or until Section 7 consultation has been completed. If the non-Federal applicant has not heard back from the Corps within 45 days, the applicant must still wait for notification from the Corps.

(d) As a result of formal or informal consultation with the FWS or NMFS the district engineer may add species-specific regional endangered species conditions to the NWPs.

(e) Authorization of an activity by a NWP does not authorize the "take" of a threatened or endangered species as defined under the ESA. In the absence of separate authorization (e.g., an ESA Section 10 Permit, a Biological Opinion with "incidental take" provisions, etc.) from the U.S. FWS or the NMFS, The Endangered Species Act prohibits any person subject to the jurisdiction of the United States to take a listed species, where "take" means to harass, harm, pursue, hunt, shoot, wound, kill, trap, capture, or collect, or to attempt to engage in any such conduct. The word "harm" in the definition of "take" means an act which actually kills or injures wildlife. Such an act may include significant habitat modification or degradation where it actually kills or injures wildlife by significantly impairing essential behavioral patterns, including breeding, feeding or sheltering.

R-16

(f) Information on the location of threatened and endangered species and their critical habitat can be obtained directly from the offices of the U.S. FWS and NMFS or their world wide web pages at http://www.fws.gov/ or http://www.fws.gov/ipac and http://www.noaa.gov/fisheries.html respectively.

19. Migratory Birds and Bald and Golden Eagles. The permittee is responsible for obtaining any "take" permits required under the U.S. Fish and Wildlife Service's regulations governing compliance with the Migratory Bird Treaty Act or the Bald and Golden Eagle Protection Act. The permittee should contact the appropriate local office of the U.S. Fish and Wildlife Service to determine if such "take" permits are required for a particular activity.

20. Historic Properties. (a) In cases where the district engineer determines that the activity may affect properties listed, or eligible for listing, in the National Register of Historic Places, the activity is not authorized, until the requirements of Section 106 of the National Historic Preservation Act (NHPA) have been satisfied.

(b) Federal permittees should follow their own procedures for complying with the requirements of Section 106 of the National Historic Preservation Act. Federal permittees must provide the district engineer with the appropriate documentation to demonstrate compliance with those requirements. The district engineer will review the documentation and determine whether it is sufficient to address section 106 compliance for the NWP activity, or whether additional section 106 consultation is necessary.

* (c) Non-federal permittees must submit a pre-construction notification to the district engineer if the authorized activity may have the potential to cause effects to any historic properties listed on, determined to be eligible for listing on, or potentially eligible for listing on the National Register of Historic Places, including previously unidentified properties. For such activities, the pre-construction notification must state which historic properties may be affected by the proposed work or include a vicinity map indicating the location of the historic properties or the potential for the presence of historic properties. Assistance regarding information on the location of or potential for the presence of historic resources can be sought from the State Historic Preservation Officer or Tribal Historic Preservation Officer, as appropriate, and the National Register of Historic Places (see 33 CFR 330.4(g)). When reviewing pre-construction notifications, district engineers will comply with the current procedures for addressing the requirements of Section 106 of the National Historic Preservation Act. The district engineer shall make a reasonable and good faith effort to carry out appropriate identification efforts, which may include background research, consultation, oral history interviews, sample field investigation, and field survey. Based on the information submitted and these efforts, the district engineer shall determine whether the proposed activity has the potential to cause an effect on the historic properties. Where the non-Federal applicant has identified historic properties on which the activity may have the potential to cause effects and so notified the Corps, the non-Federal applicant shall not begin the activity until notified by the district engineer either that the activity has no potential to cause effects or that consultation under Section 106 of the NHPA has been completed.

(d) The district engineer will notify the prospective permittee within 45 days of receipt of a complete pre-construction notification whether NHPA Section 106 consultation is required. Section 106 consultation is not required when the Corps determines that the activity does not have the potential to cause effects on historic properties (see 36 CFR §800.3(a)). If NHPA

section 106 consultation is required and will occur, the district engineer will notify the non-Federal applicant that he or she cannot begin work until Section 106 consultation is completed. If the non-Federal applicant has not heard back from the Corps within 45 days, the applicant must still wait for notification from the Corps.

(e) Prospective permittees should be aware that section 110k of the NHPA (16 U.S.C. 470h-2(k)) prevents the Corps from granting a permit or other assistance to an applicant who, with intent to avoid the requirements of Section 106 of the NHPA, has intentionally significantly adversely affected a historic property to which the permit would relate, or having legal power to prevent it, allowed such significant adverse effect to occur, unless the Corps, after consultation with the Advisory Council on Historic Preservation (ACHP), determines that circumstances justify granting such assistance despite the adverse effect created or permitted by the applicant. If circumstances justify granting the assistance, the Corps is required to notify the ACHP and provide documentation specifying the circumstances, the degree of damage to the integrity of any historic properties affected, and proposed mitigation. This documentation must include any views obtained from the applicant, SHPO/THPO, appropriate Indian tribes if the undertaking occurs on or affects historic properties on tribal lands or affects properties of interest to those tribes, and other parties known to have a legitimate interest in the impacts to the permitted activity on historic properties.

21. Discovery of Previously Unknown Remains and Artifacts. If you discover any previously unknown historic, cultural or archeological remains and artifacts while accomplishing the activity authorized by this permit, you must immediately notify the district engineer of what you have found, and to the maximum extent practicable, avoid construction activities that may affect the remains and artifacts until the required coordination has been completed. The district engineer will initiate the Federal, Tribal and state coordination required to determine if the items or remains warrant a recovery effort or if the site is eligible for listing in the National Register of Historic Places.

22. Designated Critical Resource Waters. Critical resource waters include, NOAA-managed marine sanctuaries and marine monuments, and National Estuarine Research Reserves. The district engineer may designate, after notice and opportunity for public comment, additional waters officially designated by a state as having particular environmental or ecological significance, such as outstanding national resource waters or state natural heritage sites. The district engineer may also designate additional critical resource waters after notice and opportunity for public comment.

(a) Discharges of dredged or fill material into waters of the United States are not authorized by NWPs 7, 12, 14, 16, 17, 21, 29, 31, 35, 39, 40, 42, 43, 44, 49, 50, 51, and 52 for any activity within, or directly affecting, critical resource waters, including wetlands adjacent to such waters.

(b) For NWPs 3, 8, 10, 13, 15, 18, 19, 22, 23, 25, 27, 28, 30, 33, 34, 36, 37, and 38, notification is required in accordance with general condition 31, for any activity proposed in the designated critical resource waters including wetlands adjacent to those waters. The district engineer may authorize activities under these NWPs only after it is determined that the impacts to the critical resource waters will be no more than minimal.

R-18

23. Mitigation. The district engineer will consider the following factors when determining appropriate and practicable mitigation necessary to ensure that adverse effects on the aquatic environment are minimal:

(a) The activity must be designed and constructed to avoid and minimize adverse effects, both temporary and permanent, to waters of the United States to the maximum extent practicable at the project site (i.e., on site).

(b) Mitigation in all its forms (avoiding, minimizing, rectifying, reducing, or compensating for resource losses) will be required to the extent necessary to ensure that the adverse effects to the aquatic environment are minimal.

(c) Compensatory mitigation at a minimum one-for-one ratio will be required for all wetland losses that exceed 1/10-acre and require pre-construction notification, unless the district engineer determines in writing that either some other form of mitigation would be more environmentally appropriate or the adverse effects of the proposed activity are minimal, and provides a project-specific waiver of this requirement. For wetland losses of 1/10-acre or less that require pre-construction notification, the district engineer may determine on a case-by-case basis that compensatory mitigation is required to ensure that the activity results in minimal adverse effects on the aquatic environment. Compensatory mitigation projects provided to offset losses of aquatic resources must comply with the applicable provisions of 33 CFR part 332.

(1) The prospective permittee is responsible for proposing an appropriate compensatory mitigation option if compensatory mitigation is necessary to ensure that the activity results in minimal adverse effects on the aquatic environment.

(2) Since the likelihood of success is greater and the impacts to potentially valuable uplands are reduced, wetland restoration should be the first compensatory mitigation option considered.

(3) If permittee-responsible mitigation is the proposed option, the prospective permittee is responsible for submitting a mitigation plan. A conceptual or detailed mitigation plan may be used by the district engineer to make the decision on the NWP verification request, but a final mitigation plan that addresses the applicable requirements of 33 CFR 332.4(c)(2) – (14) must be approved by the district engineer before the permittee begins work in waters of the United States, unless the district engineer determines that prior approval of the final mitigation plan is not practicable or not necessary to ensure timely completion of the required compensatory mitigation (see 33 CFR 332.3(k)(3)).

(4) If mitigation bank or in-lieu fee program credits are the proposed option, the mitigation plan only needs to address the baseline conditions at the impact site and the number of credits to be provided.

(5) Compensatory mitigation requirements (e.g., resource type and amount to be provided as compensatory mitigation, site protection, ecological performance standards, monitoring requirements) may be addressed through conditions added to the NWP authorization, instead of components of a compensatory mitigation plan.

(d) For losses of streams or other open waters that require pre-construction notification, the district engineer may require compensatory mitigation, such as stream rehabilitation, enhancement, or preservation, to ensure that the activity results in minimal adverse effects on the aquatic environment.

(e) Compensatory mitigation will not be used to increase the acreage losses allowed by the acreage limits of the NWPs. For example, if an NWP has an acreage limit of 1/2-acre, it cannot be used to authorize any project resulting in the loss of greater than 1/2-acre of waters of

the United States, even if compensatory mitigation is provided that replaces or restores some of the lost waters. However, compensatory mitigation can and should be used, as necessary, to ensure that a project already meeting the established acreage limits also satisfies the minimal impact requirement associated with the NWPs.

(f) Compensatory mitigation plans for projects in or near streams or other open waters will normally include a requirement for the restoration or establishment, maintenance, and legal protection (e.g., conservation easements) of riparian areas next to open waters. In some cases, riparian areas may be the only compensatory mitigation required. Riparian areas should consist of native species. The width of the required riparian area will address documented water quality or aquatic habitat loss concerns. Normally, the riparian area will be 25 to 50 feet wide on each side of the stream, but the district engineer may require slightly wider riparian areas to address documented water quality or habitat loss concerns. If it is not possible to establish a riparian area on both sides of a stream, or if the waterbody is a lake or coastal waters, then restoring or establishing a riparian area along a single bank or shoreline may be sufficient. Where both wetlands and open waters exist on the project site, the district engineer will determine the appropriate compensatory mitigation (e.g., riparian areas and/or wetlands compensation) based on what is best for the aquatic environment on a watershed basis. In cases where riparian areas are determined to be the most appropriate form of compensatory mitigation, the district engineer may waive or reduce the requirement to provide wetland compensatory mitigation for wetland losses.

(g) Permittees may propose the use of mitigation banks, in-lieu fee programs, or separate permittee-responsible mitigation. For activities resulting in the loss of marine or estuarine resources, permittee-responsible compensatory mitigation may be environmentally preferable if there are no mitigation banks or in-lieu fee programs in the area that have marine or estuarine credits available for sale or transfer to the permittee. For permittee-responsible mitigation, the special conditions of the NWP verification must clearly indicate the party or parties responsible for the implementation and performance of the compensatory mitigation project, and, if required, its long-term management.

(h) Where certain functions and services of waters of the United States are permanently adversely affected, such as the conversion of a forested or scrub-shrub wetland to a herbaceous wetland in a permanently maintained utility line right-of-way, mitigation may be required to reduce the adverse effects of the project to the minimal level.

24. Safety of Impoundment Structures. To ensure that all impoundment structures are safely designed, the district engineer may require non-Federal applicants to demonstrate that the structures comply with established state dam safety criteria or have been designed by qualified persons. The district engineer may also require documentation that the design has been independently reviewed by similarly qualified persons, and appropriate modifications made to ensure safety.

25. Water Quality. Where States and authorized Tribes, or EPA where applicable, have not previously certified compliance of an NWP with CWA Section 401, individual 401 Water Quality Certification must be obtained or waived (see 33 CFR 330.4(c)). The district engineer or State or Tribe may require additional water quality management measures to ensure that the authorized activity does not result in more than minimal degradation of water quality.

R-20

26. Coastal Zone Management. In coastal states where an NWP has not previously received a state coastal zone management consistency concurrence, an individual state coastal zone management consistency concurrence must be obtained, or a presumption of concurrence must occur (see 33 CFR 330.4(d)). The district engineer or a State may require additional measures to ensure that the authorized activity is consistent with state coastal zone management requirements.

27. Regional and Case-By-Case Conditions. The activity must comply with any regional conditions that may have been added by the Division Engineer (see 33 CFR 330.4(e)) and with any case specific conditions added by the Corps or by the state, Indian Tribe, or U.S. EPA in its section 401 Water Quality Certification, or by the state in its Coastal Zone Management Act consistency determination.

28. Use of Multiple Nationwide Permits. The use of more than one NWP for a single and complete project is prohibited, except when the acreage loss of waters of the United States authorized by the NWPs does not exceed the acreage limit of the NWP with the highest specified acreage limit. For example, if a road crossing over tidal waters is constructed under NWP 14, with associated bank stabilization authorized by NWP 13, the maximum acreage loss of waters of the United States for the total project cannot exceed 1/3-acre.

29. Transfer of Nationwide Permit Verifications. If the permittee sells the property associated with a nationwide permit verification, the permittee may transfer the nationwide permit verification to the new owner by submitting a letter to the appropriate Corps district office to validate the transfer. A copy of the nationwide permit verification must be attached to the letter, and the letter must contain the following statement and signature:

"When the structures or work authorized by this nationwide permit are still in existence at the time the property is transferred, the terms and conditions of this nationwide permit, including any special conditions, will continue to be binding on the new owner(s) of the property. To validate the transfer of this nationwide permit and the associated liabilities associated with compliance with its terms and conditions, have the transferee sign and date below."

_____

(Transferee)

_____

(Date)

* 30. Compliance Certification. Each permittee who receives an NWP verification letter from the Corps must provide a signed certification documenting completion of the authorized activity and any required compensatory mitigation. The success of any required permittee-responsible mitigation, including the achievement of ecological performance standards, will be addressed separately by the district engineer. The Corps will provide the permittee the certification document with the NWP verification letter. The certification document will include:

R-21

(a) A statement that the authorized work was done in accordance with the NWP authorization, including any general, regional, or activity-specific conditions;

(b) A statement that the implementation of any required compensatory mitigation was completed in accordance with the permit conditions. If credits from a mitigation bank or in-lieu fee program are used to satisfy the compensatory mitigation requirements, the certification must include the documentation required by 33 CFR 332.3(l)(3) to confirm that the permittee secured the appropriate number and resource type of credits; and

(c) The signature of the permittee certifying the completion of the work and mitigation.

* 31. Pre-Construction Notification. (a) Timing. Where required by the terms of the NWP, the prospective permittee must notify the district engineer by submitting a pre-construction notification (PCN) as early as possible. The district engineer must determine if the PCN is complete within 30 calendar days of the date of receipt and, if the PCN is determined to be incomplete, notify the prospective permittee within that 30 day period to request the additional information necessary to make the PCN complete. The request must specify the information needed to make the PCN complete. As a general rule, district engineers will request additional information necessary to make the PCN complete only once. However, if the prospective permittee does not provide all of the requested information, then the district engineer will notify the prospective permittee that the PCN is still incomplete and the PCN review process will not commence until all of the requested information has been received by the district engineer. The prospective permittee shall not begin the activity until either:

(1) He or she is notified in writing by the district engineer that the activity may proceed under the NWP with any special conditions imposed by the district or division engineer; or

(2) 45 calendar days have passed from the district engineer's receipt of the complete PCN and the prospective permittee has not received written notice from the district or division engineer. However, if the permittee was required to notify the Corps pursuant to general condition 18 that listed species or critical habitat might be affected or in the vicinity of the project, or to notify the Corps pursuant to general condition 20 that the activity may have the potential to cause effects to historic properties, the permittee cannot begin the activity until receiving written notification from the Corps that there is "no effect" on listed species or "no potential to cause effects" on historic properties, or that any consultation required under Section 7 of the Endangered Species Act (see 33 CFR 330.4(f)) and/or Section 106 of the National Historic Preservation (see 33 CFR 330.4(g)) has been completed. Also, work cannot begin under NWPs 21, 49, or 50 until the permittee has received written approval from the Corps. If the proposed activity requires a written waiver to exceed specified limits of an NWP, the permittee may not begin the activity until the district engineer issues the waiver. If the district or division engineer notifies the permittee in writing that an individual permit is required within 45 calendar days of receipt of a complete PCN, the permittee cannot begin the activity until an individual permit has been obtained. Subsequently, the permittee's right to proceed under the NWP may be modified, suspended, or revoked only in accordance with the procedure set forth in 33 CFR 330.5(d)(2).

(b) Contents of Pre-Construction Notification: The PCN must be in writing and include the following information:

(1) Name, address and telephone numbers of the prospective permittee;

(2) Location of the proposed project;

(3) A description of the proposed project; the project's purpose; direct and indirect adverse environmental effects the project would cause, including the anticipated amount of loss of water of the United States expected to result from the NWP activity, in acres, linear feet, or other appropriate unit of measure; any other NWP(s), regional general permit(s), or individual permit(s) used or intended to be used to authorize any part of the proposed project or any related activity. The description should be sufficiently detailed to allow the district engineer to determine that the adverse effects of the project will be minimal and to determine the need for compensatory mitigation. Sketches should be provided when necessary to show that the activity complies with the terms of the NWP. (Sketches usually clarify the project and when provided results in a quicker decision. Sketches should contain sufficient detail to provide an illustrative description of the proposed activity (e.g., a conceptual plan), but do not need to be detailed engineering plans);

(4) The PCN must include a delineation of wetlands, other special aquatic sites, and other waters, such as lakes and ponds, and perennial, intermittent, and ephemeral streams, on the project site. Wetland delineations must be prepared in accordance with the current method required by the Corps. The permittee may ask the Corps to delineate the special aquatic sites and other waters on the project site, but there may be a delay if the Corps does the delineation, especially if the project site is large or contains many waters of the United States. Furthermore, the 45 day period will not start until the delineation has been submitted to or completed by the Corps, as appropriate;

(5) If the proposed activity will result in the loss of greater than 1/10-acre of wetlands and a PCN is required, the prospective permittee must submit a statement describing how the mitigation requirement will be satisfied, or explaining why the adverse effects are minimal and why compensatory mitigation should not be required. As an alternative, the prospective permittee may submit a conceptual or detailed mitigation plan.

(6) If any listed species or designated critical habitat might be affected or is in the vicinity of the project, or if the project is located in designated critical habitat, for non-Federal applicants the PCN must include the name(s) of those endangered or threatened species that might be affected by the proposed work or utilize the designated critical habitat that may be affected by the proposed work. Federal applicants must provide documentation demonstrating compliance with the Endangered Species Act; and

(7) For an activity that may affect a historic property listed on, determined to be eligible for listing on, or potentially eligible for listing on, the National Register of Historic Places, for non-Federal applicants the PCN must state which historic property may be affected by the proposed work or include a vicinity map indicating the location of the historic property. Federal applicants must provide documentation demonstrating compliance with Section 106 of the National Historic Preservation Act.

(c) Form of Pre-Construction Notification: The standard individual permit application form (Form ENG 4345) may be used, but the completed application form must clearly indicate that it is a PCN and must include all of the information required in paragraphs (b)(1) through (7) of this general condition. A letter containing the required information may also be used.

(d) Agency Coordination: (1) The district engineer will consider any comments from Federal and state agencies concerning the proposed activity's compliance with the terms and conditions of the NWPs and the need for mitigation to reduce the project's adverse environmental effects to a minimal level.

(2) For all NWP activities that require pre-construction notification and result in the loss of greater than 1/2-acre of waters of the United States, for NWP 21, 29, 39, 40, 42, 43, 44, 50, 51, and 52 activities that require pre-construction notification and will result in the loss of greater than 300 linear feet of intermittent and ephemeral stream bed, and for all NWP 48 activities that require pre-construction notification, the district engineer will immediately provide (e.g., via e-mail, facsimile transmission, overnight mail, or other expeditious manner) a copy of the complete PCN to the appropriate Federal or state offices (U.S. FWS, state natural resource or water quality agency, EPA, State Historic Preservation Officer (SHPO) or Tribal Historic Preservation Office (THPO), and, if appropriate, the NMFS). With the exception of NWP 37, these agencies will have 10 calendar days from the date the material is transmitted to telephone or fax the district engineer notice that they intend to provide substantive, site-specific comments. The comments must explain why the agency believes the adverse effects will be more than minimal. If so contacted by an agency, the district engineer will wait an additional 15 calendar days before making a decision on the pre-construction notification. The district engineer will fully consider agency comments received within the specified time frame concerning the proposed activity's compliance with the terms and conditions of the NWPs, including the need for mitigation to ensure the net adverse environmental effects to the aquatic environment of the proposed activity are minimal. The district engineer will provide no response to the resource agency, except as provided below. The district engineer will indicate in the administrative record associated with each pre-construction notification that the resource agencies' concerns were considered. For NWP 37, the emergency watershed protection and rehabilitation activity may proceed immediately in cases where there is an unacceptable hazard to life or a significant loss of property or economic hardship will occur. The district engineer will consider any comments received to decide whether the NWP 37 authorization should be modified, suspended, or revoked in accordance with the procedures at 33 CFR 330.5.

(3) In cases of where the prospective permittee is not a Federal agency, the district engineer will provide a response to NMFS within 30 calendar days of receipt of any Essential Fish Habitat conservation recommendations, as required by Section 305(b)(4)(B) of the Magnuson-Stevens Fishery Conservation and Management Act.

(4) Applicants are encouraged to provide the Corps with either electronic files or multiple copies of pre-construction notifications to expedite agency coordination.

D. District Engineer's Decision

1. In reviewing the PCN for the proposed activity, the district engineer will determine whether the activity authorized by the NWP will result in more than minimal individual or cumulative adverse environmental effects or may be contrary to the public interest. For a linear project, this determination will include an evaluation of the individual crossings to determine whether they individually satisfy the terms and conditions of the NWP(s), as well as the cumulative effects caused by all of the crossings authorized by NWP. If an applicant requests a waiver of the 300 linear foot limit on impacts to intermittent or ephemeral streams or of an otherwise applicable limit, as provided for in NWPs 13, 21, 29, 36, 39, 40, 42, 43, 44, 50, 51 or 52, the district engineer will only grant the waiver upon a written determination that the NWP activity will result in minimal adverse effects. When making minimal effects determinations the district engineer will consider the direct and indirect effects caused by the NWP activity. The district engineer will also consider site specific factors, such as the environmental setting in the

vicinity of the NWP activity, the type of resource that will be affected by the NWP activity, the functions provided by the aquatic resources that will be affected by the NWP activity, the degree or magnitude to which the aquatic resources perform those functions, the extent that aquatic resource functions will be lost as a result of the NWP activity (e.g., partial or complete loss), the duration of the adverse effects (temporary or permanent), the importance of the aquatic resource functions to the region (e.g., watershed or ecoregion), and mitigation required by the district engineer. If an appropriate functional assessment method is available and practicable to use, that assessment method may be used by the district engineer to assist in the minimal adverse effects determination. The district engineer may add case-specific special conditions to the NWP authorization to address site-specific environmental concerns.

2. If the proposed activity requires a PCN and will result in a loss of greater than 1/10-acre of wetlands, the prospective permittee should submit a mitigation proposal with the PCN. Applicants may also propose compensatory mitigation for projects with smaller impacts. The district engineer will consider any proposed compensatory mitigation the applicant has included in the proposal in determining whether the net adverse environmental effects to the aquatic environment of the proposed activity are minimal. The compensatory mitigation proposal may be either conceptual or detailed. If the district engineer determines that the activity complies with the terms and conditions of the NWP and that the adverse effects on the aquatic environment are minimal, after considering mitigation, the district engineer will notify the permittee and include any activity-specific conditions in the NWP verification the district engineer deems necessary. Conditions for compensatory mitigation requirements must comply with the appropriate provisions at 33 CFR 332.3(k). The district engineer must approve the final mitigation plan before the permittee commences work in waters of the United States, unless the district engineer determines that prior approval of the final mitigation plan is not practicable or not necessary to ensure timely completion of the required compensatory mitigation. If the prospective permittee elects to submit a compensatory mitigation plan with the PCN, the district engineer will expeditiously review the proposed compensatory mitigation plan. The district engineer must review the proposed compensatory mitigation plan within 45 calendar days of receiving a complete PCN and determine whether the proposed mitigation would ensure no more than minimal adverse effects on the aquatic environment. If the net adverse effects of the project on the aquatic environment (after consideration of the compensatory mitigation proposal) are determined by the district engineer to be minimal, the district engineer will provide a timely written response to the applicant. The response will state that the project can proceed under the terms and conditions of the NWP, including any activity-specific conditions added to the NWP authorization by the district engineer.

3. If the district engineer determines that the adverse effects of the proposed work are more than minimal, then the district engineer will notify the applicant either: (a) That the project does not qualify for authorization under the NWP and instruct the applicant on the procedures to seek authorization under an individual permit; (b) that the project is authorized under the NWP subject to the applicant's submission of a mitigation plan that would reduce the adverse effects on the aquatic environment to the minimal level; or (c) that the project is authorized under the NWP with specific modifications or conditions. Where the district engineer determines that mitigation is required to ensure no more than minimal adverse effects occur to the aquatic environment, the activity will be authorized within the 45-day PCN period, with activity-specific

conditions that state the mitigation requirements. The authorization will include the necessary conceptual or detailed mitigation or a requirement that the applicant submit a mitigation plan that would reduce the adverse effects on the aquatic environment to the minimal level. When mitigation is required, no work in waters of the United States may occur until the district engineer has approved a specific mitigation plan or has determined that prior approval of a final mitigation plan is not practicable or not necessary to ensure timely completion of the required compensatory mitigation.

FURTHER INFORMATION

1. District Engineers have authority to determine if an activity complies with the terms and conditions of an NWP.

2. NWPs do not obviate the need to obtain other federal, state, or local permits, approvals, or authorizations required by law.

3. NWPs do not grant any property rights or exclusive privileges.

4. NWPs do not authorize any injury to the property or rights of others.

5. NWPs do not authorize interference with any existing or proposed Federal project.

DEFINITIONS

Best management practices (BMPs): Policies, practices, procedures, or structures implemented to mitigate the adverse environmental effects on surface water quality resulting from development. BMPs are categorized as structural or non-structural.

Compensatory mitigation: The restoration (re-establishment or rehabilitation), establishment (creation), enhancement, and/or in certain circumstances preservation of aquatic resources for the purposes of offsetting unavoidable adverse impacts which remain after all appropriate and practicable avoidance and minimization has been achieved.

Currently serviceable: Useable as is or with some maintenance, but not so degraded as to essentially require reconstruction.

Direct effects: Effects that are caused by the activity and occur at the same time and place.

Discharge: The term "discharge" means any discharge of dredged or fill material.

Enhancement: The manipulation of the physical, chemical, or biological characteristics of an aquatic resource to heighten, intensify, or improve a specific aquatic resource function(s). Enhancement results in the gain of selected aquatic resource function(s), but may also lead to a decline in other aquatic resource function(s). Enhancement does not result in a gain in aquatic resource area.

Ephemeral stream: An ephemeral stream has flowing water only during, and for a short duration after, precipitation events in a typical year. Ephemeral stream beds are located above the water table year-round. Groundwater is not a source of water for the stream. Runoff from rainfall is the primary source of water for stream flow.

Establishment (creation): The manipulation of the physical, chemical, or biological characteristics present to develop an aquatic resource that did not previously exist at an upland site. Establishment results in a gain in aquatic resource area.

High Tide Line: The line of intersection of the land with the water's surface at the maximum height reached by a rising tide. The high tide line may be determined, in the absence

of actual data, by a line of oil or scum along shore objects, a more or less continuous deposit of fine shell or debris on the foreshore or berm, other physical markings or characteristics, vegetation lines, tidal gages, or other suitable means that delineate the general height reached by a rising tide. The line encompasses spring high tides and other high tides that occur with periodic frequency but does not include storm surges in which there is a departure from the normal or predicted reach of the tide due to the piling up of water against a coast by strong winds such as those accompanying a hurricane or other intense storm.

Historic Property: Any prehistoric or historic district, site (including archaeological site), building, structure, or other object included in, or eligible for inclusion in, the National Register of Historic Places maintained by the Secretary of the Interior. This term includes artifacts, records, and remains that are related to and located within such properties. The term includes properties of traditional religious and cultural importance to an Indian tribe or Native Hawaiian organization and that meet the National Register criteria (36 CFR part 60).

Independent utility: A test to determine what constitutes a single and complete non-linear project in the Corps regulatory program. A project is considered to have independent utility if it would be constructed absent the construction of other projects in the project area. Portions of a multi-phase project that depend upon other phases of the project do not have independent utility. Phases of a project that would be constructed even if the other phases were not built can be considered as separate single and complete projects with independent utility.

Indirect effects: Effects that are caused by the activity and are later in time or farther removed in distance, but are still reasonably foreseeable.

Intermittent stream: An intermittent stream has flowing water during certain times of the year, when groundwater provides water for stream flow. During dry periods, intermittent streams may not have flowing water. Runoff from rainfall is a supplemental source of water for stream flow.

Loss of waters of the United States: Waters of the United States that are permanently adversely affected by filling, flooding, excavation, or drainage because of the regulated activity. Permanent adverse effects include permanent discharges of dredged or fill material that change an aquatic area to dry land, increase the bottom elevation of a waterbody, or change the use of a waterbody. The acreage of loss of waters of the United States is a threshold measurement of the impact to jurisdictional waters for determining whether a project may qualify for an NWP; it is not a net threshold that is calculated after considering compensatory mitigation that may be used to offset losses of aquatic functions and services. The loss of stream bed includes the linear feet of stream bed that is filled or excavated. Waters of the United States temporarily filled, flooded, excavated, or drained, but restored to pre-construction contours and elevations after construction, are not included in the measurement of loss of waters of the United States. Impacts resulting from activities eligible for exemptions under Section 404(f) of the Clean Water Act are not considered when calculating the loss of waters of the United States.

Non-tidal wetland: A non-tidal wetland is a wetland that is not subject to the ebb and flow of tidal waters. The definition of a wetland can be found at 33 CFR 328.3(b). Non-tidal wetlands contiguous to tidal waters are located landward of the high tide line (i.e., spring high tide line).

Open water: For purposes of the NWPs, an open water is any area that in a year with normal patterns of precipitation has water flowing or standing above ground to the extent that an ordinary high water mark can be determined. Aquatic vegetation within the area of standing or

flowing water is either non-emergent, sparse, or absent. Vegetated shallows are considered to be open waters. Examples of "open waters" include rivers, streams, lakes, and ponds.

Ordinary High Water Mark: An ordinary high water mark is a line on the shore established by the fluctuations of water and indicated by physical characteristics, or by other appropriate means that consider the characteristics of the surrounding areas (see 33 CFR 328.3(e)).

Perennial stream: A perennial stream has flowing water year-round during a typical year. The water table is located above the stream bed for most of the year. Groundwater is the primary source of water for stream flow. Runoff from rainfall is a supplemental source of water for stream flow.

Practicable: Available and capable of being done after taking into consideration cost, existing technology, and logistics in light of overall project purposes.

Pre-construction notification: A request submitted by the project proponent to the Corps for confirmation that a particular activity is authorized by nationwide permit. The request may be a permit application, letter, or similar document that includes information about the proposed work and its anticipated environmental effects. Pre-construction notification may be required by the terms and conditions of a nationwide permit, or by regional conditions. A pre-construction notification may be voluntarily submitted in cases where pre-construction notification is not required and the project proponent wants confirmation that the activity is authorized by nationwide permit.

Preservation: The removal of a threat to, or preventing the decline of, aquatic resources by an action in or near those aquatic resources. This term includes activities commonly associated with the protection and maintenance of aquatic resources through the implementation of appropriate legal and physical mechanisms. Preservation does not result in a gain of aquatic resource area or functions.

Re-establishment: The manipulation of the physical, chemical, or biological characteristics of a site with the goal of returning natural/historic functions to a former aquatic resource. Re-establishment results in rebuilding a former aquatic resource and results in a gain in aquatic resource area and functions.

Rehabilitation: The manipulation of the physical, chemical, or biological characteristics of a site with the goal of repairing natural/historic functions to a degraded aquatic resource. Rehabilitation results in a gain in aquatic resource function, but does not result in a gain in aquatic resource area.

Restoration: The manipulation of the physical, chemical, or biological characteristics of a site with the goal of returning natural/historic functions to a former or degraded aquatic resource. For the purpose of tracking net gains in aquatic resource area, restoration is divided into two categories: re-establishment and rehabilitation.

Riffle and pool complex: Riffle and pool complexes are special aquatic sites under the 404(b)(1) Guidelines. Riffle and pool complexes sometimes characterize steep gradient sections of streams. Such stream sections are recognizable by their hydraulic characteristics. The rapid movement of water over a course substrate in riffles results in a rough flow, a turbulent surface, and high dissolved oxygen levels in the water. Pools are deeper areas associated with riffles. A slower stream velocity, a streaming flow, a smooth surface, and a finer substrate characterize pools.

Riparian areas: Riparian areas are lands adjacent to streams, lakes, and estuarine-marine shorelines. Riparian areas are transitional between terrestrial and aquatic ecosystems, through

which surface and subsurface hydrology connects riverine, lacustrine, estuarine, and marine waters with their adjacent wetlands, non-wetland waters, or uplands. Riparian areas provide a variety of ecological functions and services and help improve or maintain local water quality. (See general condition 23.)

Shellfish seeding: The placement of shellfish seed and/or suitable substrate to increase shellfish production. Shellfish seed consists of immature individual shellfish or individual shellfish attached to shells or shell fragments (i.e., spat on shell). Suitable substrate may consist of shellfish shells, shell fragments, or other appropriate materials placed into waters for shellfish habitat.

Single and complete linear project: A linear project is a project constructed for the purpose of getting people, goods, or services from a point of origin to a terminal point, which often involves multiple crossings of one or more waterbodies at separate and distant locations. The term "single and complete project" is defined as that portion of the total linear project proposed or accomplished by one owner/developer or partnership or other association of owners/developers that includes all crossings of a single water of the United States (i.e., a single waterbody) at a specific location. For linear projects crossing a single or multiple waterbodies several times at separate and distant locations, each crossing is considered a single and complete project for purposes of NWP authorization. However, individual channels in a braided stream or river, or individual arms of a large, irregularly shaped wetland or lake, etc., are not separate waterbodies, and crossings of such features cannot be considered separately.

Single and complete non-linear project: For non-linear projects, the term "single and complete project" is defined at 33 CFR 330.2(i) as the total project proposed or accomplished by one owner/developer or partnership or other association of owners/developers. A single and complete non-linear project must have independent utility (see definition of "independent utility"). Single and complete non-linear projects may not be "piecemealed" to avoid the limits in an NWP authorization.

Stormwater management: Stormwater management is the mechanism for controlling stormwater runoff for the purposes of reducing downstream erosion, water quality degradation, and flooding and mitigating the adverse effects of changes in land use on the aquatic environment.

Stormwater management facilities: Stormwater management facilities are those facilities, including but not limited to, stormwater retention and detention ponds and best management practices, which retain water for a period of time to control runoff and/or improve the quality (i.e., by reducing the concentration of nutrients, sediments, hazardous substances and other pollutants) of stormwater runoff.

Stream bed: The substrate of the stream channel between the ordinary high water marks. The substrate may be bedrock or inorganic particles that range in size from clay to boulders. Wetlands contiguous to the stream bed, but outside of the ordinary high water marks, are not considered part of the stream bed.

Stream channelization: The manipulation of a stream's course, condition, capacity, or location that causes more than minimal interruption of normal stream processes. A channelized stream remains a water of the United States.

Structure: An object that is arranged in a definite pattern of organization. Examples of structures include, without limitation, any pier, boat dock, boat ramp, wharf, dolphin, weir, boom, breakwater, bulkhead, revetment, riprap, jetty, artificial island, artificial reef, permanent

mooring structure, power transmission line, permanently moored floating vessel, piling, aid to navigation, or any other manmade obstacle or obstruction.

Tidal wetland: A tidal wetland is a wetland (i.e., water of the United States) that is inundated by tidal waters. The definitions of a wetland and tidal waters can be found at 33 CFR 328.3(b) and 33 CFR 328.3(f), respectively. Tidal waters rise and fall in a predictable and measurable rhythm or cycle due to the gravitational pulls of the moon and sun. Tidal waters end where the rise and fall of the water surface can no longer be practically measured in a predictable rhythm due to masking by other waters, wind, or other effects. Tidal wetlands are located channelward of the high tide line, which is defined at 33 CFR 328.3(d).

Vegetated shallows: Vegetated shallows are special aquatic sites under the 404(b)(1) Guidelines. They are areas that are permanently inundated and under normal circumstances have rooted aquatic vegetation, such as seagrasses in marine and estuarine systems and a variety of vascular rooted plants in freshwater systems.

Waterbody: For purposes of the NWPs, a waterbody is a jurisdictional water of the United States. If a jurisdictional wetland is adjacent – meaning bordering, contiguous, or neighboring – to a waterbody determined to be a water of the United States under 33 CFR 328.3(a)(1)-(6), that waterbody and its adjacent wetlands are considered together as a single aquatic unit (see 33 CFR 328.4(c)(2)). Examples of "waterbodies" include streams, rivers, lakes, ponds, and wetlands.

R-30

Final Regional Conditions 2012

NOTICE ABOUT WEB LINKS IN THIS DOCUMENT:
The web links (both internal to our District and any external links to collaborating agencies) in this document are valid at the time of publication. However, the Wilmington District Regulatory Program web page addresses, as with other agency web sites, may change over the timeframe of the five-year Nationwide Permit renewal cycle, in response to policy mandates or technology advances. While we will make every effort to check on the integrity of our web links and provide re-direct pages whenever possible, we ask that you report any broken links to us so we can keep the page information current and usable. We apologize in advanced for any broken links that you may encounter, and we ask that you navigate from the regulatory home page (wetlands and stream permits) of the Wilmington District Corps of Engineers, to the "Permits" section of our web site to find links for pages that cannot be found by clicking directly on the listed web link in this document.

Final 2012 Regional Conditions for Nationwide Permits (NWP) in the Wilmington District

1.0 Excluded Waters

The Corps has identified waters that will be excluded from the use of all NWP's during certain timeframes. These waters are:

1.1 Anadromous Fish Spawning Areas

Waters of the United States identified by either the North Carolina Division of Marine Fisheries (NCDMF) or the North Carolina Wildlife Resources Commission (NCWRC) as anadromous fish spawning areas are excluded during the period between February 15 and June 30, without prior written approval from NCDMF or NCWRC and the Corps.

1.2 Trout Waters Moratorium

Waters of the United States in the twenty-five designated trout counties of North Carolina are excluded during the period between October 15 and April 15 without prior written approval from the NCWRC. (See Section 2.7 for a list of the twenty-five trout counties).

1.3 Sturgeon Spawning Areas as Designated by the National Marine Fisheries Service (NMFS)

Waters of the United States designated as sturgeon spawning areas are excluded during the period between February 1 and June 30, without prior written approval from the NMFS.

R-31

* 2.0 Waters Requiring Additional Notification

The Corps has identified waters that will be subject to additional notification requirements for activities authorized by all NWP's. These waters are:

* 2.1 Western NC Counties that Drain to Designated Critical Habitat

For proposed activities within Waters of the U.S. that require a Pre-Construction Notification pursuant to General Condition 31 (PCN) and are located in the sixteen counties listed below, applicants must provide a copy of the PCN to the US Fish and Wildlife Service, 160 Zillicoa Street, Asheville, North Carolina 28801. This PCN must be sent concurrently to the US Fish and Wildlife Service and the Corps Asheville Regulatory Field Office. Please see General Condition 18 for specific notification requirements related to Federally Endangered Species and the following website for information on the location of designated critical habitat.

Counties with tributaries that drain to designated critical habitat that require notification to the Asheville US Fish and Wildlife Service: Avery, Cherokee, Forsyth, Graham, Haywood, Henderson, Jackson, Macon Mecklenburg, Mitchell, Stokes, Surry, Swain, Transylvania, Union and Yancey.

Website and office addresses for Endangered Species Act Information:

The Wilmington District has developed the following website for applicants which provides guidelines on how to review linked websites and maps in order to fulfill NWP general condition 18 requirements: http://www.saw.usace.army.mil/wetlands/ESA

Applicants who do not have internet access may contact the appropriate US Fish and Wildlife Service offices listed below or the US Army Corps of Engineers at (910) 251- 4633:

US Fish and Wildlife Service
Asheville Field Office
160 Zillicoa Street
Asheville, NC 28801
Telephone: (828) 258-3939

Asheville US Fish and Wildlife Service Office counties: All counties west of and including Anson, Stanly, Davidson, Forsyth and Stokes Counties

US Fish and Wildlife Service
Raleigh Field Office
Post Office Box 33726
Raleigh, NC 27636-3726
Telephone: (919) 856-4520

Raleigh US Fish and Wildlife Service Office counties: all counties east of and including Richmond, Montgomery, Randolph, Guilford, and Rockingham Counties.

* **2.2 Special Designation Waters**

Prior to the use of any NWP in any of the following identified waters and contiguous wetlands in North Carolina, applicants must comply with Nationwide Permit General Condition 31 (PCN). The North Carolina waters and contiguous wetlands that require additional notification requirements are:

"Outstanding Resource Waters" (ORW) or "High Quality Waters" (HQW) as designated by the North Carolina Environmental Management Commission; "Inland Primary Nursery Areas" (IPNA) as designated by the NCWRC; "Contiguous Wetlands" as defined by the North Carolina Environmental Management Commission; or "Primary Nursery Areas" (PNA) as designated by the North Carolina Marine Fisheries Commission.

2.3 Coastal Area Management Act (CAMA) Areas of Environmental Concern

Non-federal applicants for any NWP in a designated "Area of Environmental Concern" (AEC) in the twenty (20) counties of Eastern North Carolina covered by the North Carolina Coastal Area Management Act (CAMA) must also obtain the required CAMA permit. Development activities for non-federal projects may not commence until a copy of the approved CAMA permit is furnished to the appropriate Wilmington District Regulatory Field Office (Wilmington Field Office – 69 Darlington Avenue, Wilmington, NC 28403 or Washington Field Office – 2407 West 5th Street, Washington, NC 27889).

* **2.4 Barrier Islands**

Prior to the use of any NWP on a barrier island of North Carolina, applicants must comply with Nationwide Permit General Condition 31 (PCN).

* **2.5 Mountain or Piedmont Bogs**

Prior to the use of any NWP in a Bog classified by the North Carolina Wetland Assessment Methodology (NCWAM), applicants shall comply with Nationwide Permit General Condition 31 (PCN). The latest version of NCWAM is located on the NC DWQ web site at: http://portal.ncdenr.org/web/wq/swp/ws/pdu/ncwam .

* **2.6 Animal Waste Facilities**

Prior to use of any NWP for construction of animal waste facilities in waters of the US, including wetlands, applicants shall comply with Nationwide Permit General Condition 31 (PCN).

* **2.7 Trout Waters**

Prior to any discharge of dredge or fill material into streams or waterbodies within the twenty-five (25) designated trout counties of North Carolina, the applicant shall comply with Nationwide Permit General Condition 31 (PCN). The applicant shall also provide a copy of the notification to the appropriate NCWRC office to facilitate the determination of any potential

impacts to designated Trout Waters. Notification to the Corps of Engineers will include a statement with the name of the NCWRC biologist contacted, the date of the notification, the location of work, a delineation of wetlands, a discussion of alternatives to working in the mountain trout waters, why alternatives were not selected, and a plan to provide compensatory mitigation for all unavoidable adverse impacts to mountain trout waters.

NCWRC and NC Trout Counties

Western Piedmont Region Coordinator	Alleghany	Caldwell	Watauga
20830 Great Smoky Mtn. Expressway	Ashe	Mitchell	Wilkes
Waynesville, NC 28786	Avery	Stokes	
Telephone: (828) 452-2546	Burke	Surry	

Mountain Region Coordinator	Buncombe	Henderson	Polk
20830 Great Smoky Mtn. Expressway	Cherokee	Jackson	Rutherford
Waynesville, NC 28786	Clay	Macon	Swain
Telephone: (828) 452-2546	Graham	Madison	Transylvania
Fax: (828) 452-7772	Haywood	McDowell	Yancey

3.0 List of Corps Regional Conditions for All Nationwide Permits

The following conditions apply to all Nationwide Permits in the Wilmington District:

3.1 Limitation of Loss of Perennial Stream Bed

NWPs may not be used for activities that may result in the loss or degradation of greater than 300 total linear feet of perennial, intermittent or ephemeral stream, unless the District Commander has waived the 300 linear foot limit for ephemeral and intermittent streams on a case-by-case basis and he determines that the proposed activity will result in minimal individual and cumulative adverse impacts to the aquatic environment. Loss of stream includes the linear feet of stream bed that is filled, excavated, or flooded by the proposed activity. Waivers for the loss of ephemeral and intermittent streams must be in writing and documented by appropriate/accepted stream quality assessments*. This waiver only applies to the 300 linear feet threshold for NWPs.

*NOTE: Applicants should utilize the most current methodology prescribed by Wilmington District to assess stream function and quality. Information can be found at:

http://www.saw.usace.army.mil/wetlands/permits/nwp/nwp2012 (see "Quick Links")

3.2 Mitigation for Loss of Stream Bed

For any NWP that results in a loss of more than 150 linear feet of perennial and/or ephemeral/intermittent stream, the applicant shall provide a mitigation proposal to compensate for more than minimal individual and cumulative adverse impacts to the aquatic environment. For stream losses less than 150 linear feet, that require a PCN, the District Commander may determine, on a case-by-case basis that compensatory mitigation is required to ensure that the activity results in minimal adverse effect on the aquatic environment.

3.3 Pre-construction Notification for Loss of Streambed Exceeding 150 Feet.

Prior to use of any NWP for any activity which impacts more than 150 total linear feet of perennial stream or ephemeral/ intermittent stream, the applicant must comply with Nationwide Permit General Condition 31 (PCN). This applies to NWPs that do not have specific notification requirements. If a NWP has specific notification requirements, the requirements of the NWP should be followed.

3.4 Restriction on Use of Live Concrete

For all NWPs which allow the use of concrete as a building material, live or fresh concrete, including bags of uncured concrete, may not come into contact with the water in or entering into waters of the US. Water inside coffer dams or casings that has been in contact with wet concrete shall only be returned to waters of the US when it is no longer poses a threat to aquatic organisms.

3.5 Requirements for Using Riprap for Bank Stabilization

For all NWPs that allow for the use of riprap material for bank stabilization, the following measures shall be applied:

3.5.1. Filter cloth must be placed underneath the riprap as an additional requirement of its use in North Carolina waters.

3.5.2. The placement of riprap shall be limited to the areas depicted on submitted work plan drawings.

3.5.3. The riprap material shall be clean and free from loose dirt or any pollutant except in trace quantities that would not have an adverse environmental effect.

3.5.4. It shall be of a size sufficient to prevent its movement from the authorized alignment by natural forces under normal conditions.

3.5.5. The riprap material shall consist of clean rock or masonry material such as, but not limited to, granite, marl, or broken concrete.

R-35

3.5.6. A waiver from the specifications in this Regional Condition may be requested in writing. The waiver will only be issued if it can be demonstrated that the impacts of complying with this Regional condition would result in greater adverse impacts to the aquatic environment.

3.6 Safe Passage Requirements for Culvert Placement

For all NWPs that involve the construction/installation of culverts, measures will be included in the construction/installation that will promote the safe passage of fish and other aquatic organisms. The dimension, pattern, and profile of the stream above and below a pipe or culvert should not be modified by widening the stream channel or by reducing the depth of the stream in connection with the construction activity. The width, height, and gradient of a proposed culvert should be such as to pass the average historical low flow and spring flow without adversely altering flow velocity. Spring flow should be determined from gage data, if available. In the absence of such data, bankfull flow can be used as a comparable level.

In the twenty (20) counties of North Carolina designated as coastal counties by the Coastal Area Management Act (CAMA): All pipes/culverts must be sufficiently sized to allow for the burial of the bottom of the pipe/culvert at least one foot below normal bed elevation when they are placed within the Public Trust Area of Environmental Concern (AEC) and/or the Estuarine Waters AEC as designated by CAMA, and/or all streams appearing as blue lines on United States Geological Survey (USGS) 7.5-minute quadrangle maps.

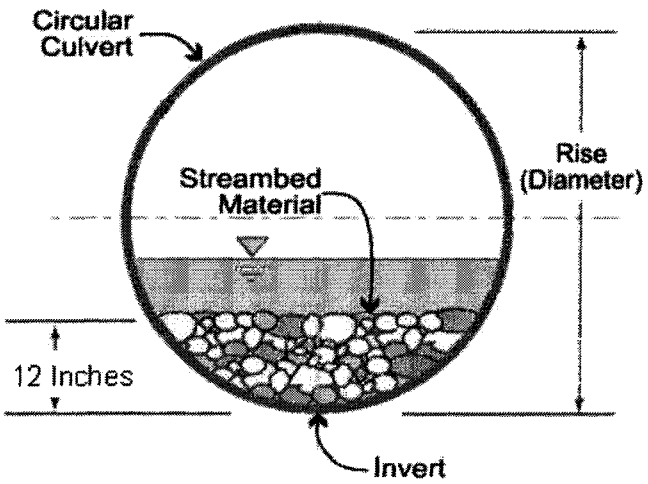

In all other counties: Culverts greater than 48 inches in diameter will be buried at least one foot below the bed of the stream. Culverts 48 inches in diameter or less shall be buried or placed on the stream bed as practicable and appropriate to maintain aquatic passage, and every effort shall be made to maintain the existing channel slope. The bottom of the culvert must be placed at a

depth below the natural stream bottom to provide for passage during drought or low flow conditions.

Culverts are to be designed and constructed in a manner that minimizes destabilization and head cutting. Destabilizing the channel and head cutting upstream should be considered and appropriate actions incorporated in the design and placement of the culvert.

A waiver from the depth specifications in this condition may be requested in writing. The waiver will be issued if it can be demonstrated that the proposal would result in the least impacts to the aquatic environment.

All counties: Culverts placed within riparian and/or riverine wetlands must be installed in a manner that does not restrict the flow and circulation patterns of waters of the United States. Culverts placed across wetland fills purely for the purposes of equalizing surface water do not have to be buried.

3.7 Notification to NCDENR Shellfish Sanitation Section

Applicants shall notify the NCDENR Shellfish Sanitation Section prior to dredging in or removing sediment from an area closed to shell fishing where the effluent may be released to an area open for shell fishing or swimming in order to avoid contamination from the disposal area and cause a temporary shellfish closure to be made. Such notification shall also be provided to the appropriate Corps of Engineers Regulatory Field Office. Any disposal of sand to the ocean beach should occur between November 1 and April 30 when recreational usage is low. Only clean sand should be used and no dredged sand from closed shell fishing areas may be used. If beach disposal were to occur at times other than stated above or if sand from a closed shell fishing area is to be used, a swimming advisory shall be posted, and a press release shall be issued by the permittee.

3.8 Preservation of Submerged Aquatic Vegetation

Adverse impacts to Submerged Aquatic Vegetation (SAV) are not authorized by any NWP within any of the twenty coastal counties defined by North Carolina's Coastal Area Management Act of 1974 (CAMA).

3.9 Sedimentation and Erosion Control Structures and Measures

3.9.1. All PCNs will identify and describe sedimentation and erosion control structures and measures proposed for placement in waters of the US. The structures and measures should be depicted on maps, surveys or drawings showing location and impacts to jurisdictional wetlands and streams.

4.5 NWP #14 - Linear Transportation Crossings

4.5.1. If appropriate, applicants shall employ natural channel design (see definition below and NOTE below) to the maximum extent practicable for stream relocations. In the event it is not appropriate to employ natural channel design, any stream relocation shall be considered a permanent impact and the applicant shall provide a mitigation plan to compensate for the loss of aquatic function associated with the proposed activity.

Natural Channel Design: A geomorphologic approach to stream restoration based on an understanding of valley type, general watershed conditions, dimension, pattern, profile, hydrology and sediment transport of natural, stable channels (reference condition) and applying this understanding to the reconstruction of a stable channel.

NOTE: Applicants should reference the "Mitigation" section of the Wilmington District web site for more information regarding appropriate stream design. For projects located within the Coastal Plain ecoregion of North Carolina and within headwater areas across the state, use the specific guidance on coastal plain stream restoration.

4.5.2. Bank-full flows (or less) shall be accommodated through maintenance of the existing bank-full channel cross sectional area. Additional culverts at such crossings shall be allowed only to receive flows exceeding bank-full.

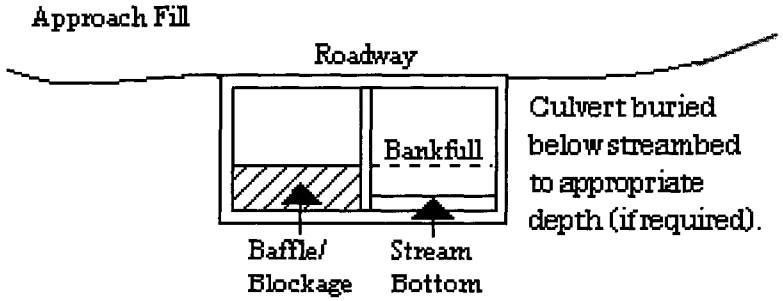

4.5.3. Where adjacent floodplain is available, flows exceeding bank-full should be accommodated by installing culverts at the floodplain elevation.

4.5.4. This NWP authorizes only upland to upland crossings and cannot be used in combination with Nationwide Permit 18 to create an upland within waters of the United States, including wetlands.

4.5.5. This NWP cannot be used for private projects located in tidal waters or tidal wetlands.

4.5.6. Excavation of existing stream channels shall be limited to the minimum necessary to construct or install the proposed culvert. The final width of the impacted streams at the culvert inlet and outlet should be no greater than the original stream width. A waiver from this condition may be requested in writing. The waiver will be issued if it can be demonstrated that it is not practicable to limit the final width of the culvert to that of the impacted stream at the culvert inlet and outlet and the proposed design would result in less impacts to the aquatic environment.

4.0 NWP #33 – Temporary Construction, Access and Dewatering

The required restoration plan must include a timetable for restoration activities.

R-38

North Carolina Department of Environment and Natural Resources
Division of Water Quality
Charles Wakild, P.E
Director

Beverly Eaves Perdue
Governor

Dee Freeman
Secretary

January 2, 2013
Rowan County
NCDWQ Project No. 20121107
Safety Improvements Reid to North Kannapolis
TIP No. P-5206

APPROVAL of 401 WATER QUALITY CERTIFICATION with ADDITIONAL CONDITIONS

Mr. Marc Hamel , P.E., Manager of Environmental Programs
NCDOT, Rail Division
1553 Mail Service Center
Raleigh, NC 27699-1553

Dear Mr. Hamel:

You have our approval, in accordance with the conditions listed below, for the following impacts for the purpose of Railroad and Crossing Safety Improvements from Reid to North Kannapolis in Rowan County:

Stream Impacts in the Yadkin-Pee Dee River Basin

Site	Permanent Fill in Intermittent Stream (linear ft)	Temporary Fill in Intermittent Stream (linear ft)	Permanent Fill in Perennial Stream (linear ft)	Temporary Fill in Perennial Stream (linear ft)	Total Stream Impact (linear ft)	Stream Impacts Requiring Mitigation (linear ft)
1	216		51		267	165
Total	**216**		**51**		**267**	165

Total Stream Impact for Project: 267 linear feet.

Wetland Impacts in the Yadkin-Pee Dee River Basin

Site	Fill (ac)	Fill (temporary) (ac)	Excavation (ac)	Mechanized Clearing (ac)	Hand Clearing (ac)	Area under Bridge (ac)	Total Wetland Impact (ac)
1	0.10		0.01				0.11
Total	**0.10**		**0.01**				**0.11**

Total Wetland Impact for Project: 0.11 acres.

The project shall be constructed in accordance with your application dated received December 7, 2012 with additional information dated received electronically on December 21, 2012. After reviewing your application, we have decided that these impacts are covered by General Water Quality Certification Number 3886 and 3893. This certification corresponds to the Nationwide Permit 14 and Nationwide Permit 33 issued by the Corps of Engineers. In addition, you should acquire any other federal, state or local permits before you proceed with your project including (but not limited to) Sediment and Erosion Control, Non-Discharge and Water Supply Watershed regulations. This approval will expire with the accompanying 404 permit.

North Carolina Division of Water Quality, Winston-Salem Regional Office
Location: 585 Waughtown St. Winston-Salem, North Carolina 27107
Phone: 336-771-5000 \ FAX: 336-771-4630
Internet: www.ncwaterquality.org

An Equal Opportunity \ Affirmative Action Employer

One NorthCarolina Naturally

R-39

This approval is valid solely for the purpose and design described in your application (unless modified below). Should your project change, you must notify the NCDWQ and submit a new application. If the property is sold, the new owner must be given a copy of this Certification and approval letter, and is thereby responsible for complying with all the conditions. If total wetland fills for this project (now or in the future) exceed one acre, or of total impacts to streams (now or in the future) exceed 150 linear feet, compensatory mitigation may be required as described in 15A NCAC 2H .0506 (h) (6) and (7). For this approval to remain valid, you must adhere to the conditions listed in the attached certification(s) and any additional conditions listed below.

Condition(s) of Certification:

Project Specific Conditions

* 1. The NCDOT Rail Division will conduct a pre-construction meeting with all appropriate staff to ensure that the project supervisor and essential staff understand the potential issues with stream and pipe alignment at the permitted site. NCDWQ staff shall be invited to the pre-construction meeting.

* 2. Compensatory mitigation for 165 linear feet of impact to streams is required. We understand that you have chosen to perform compensatory mitigation for impacts to streams through the North Carolina Ecosystem Enhancement Program (EEP), and that the EEP has agreed to implement the mitigation for the project. EEP has indicated in a letter dated December 13, 2012 that they will assume responsibility for satisfying the federal Clean Water Act compensatory mitigation requirements for the above-referenced project, in accordance with the EEP Mitigation Banking Instrument signed July 28, 2010.

3. Tall fescue shall not be used in the establishment of temporary or permanent groundcover within riparian areas. For the establishment of permanent herbaceous cover, erosion control matting shall be used in conjunction with an appropriate native seed mix on disturbed soils within the riparian area and on disturbed steep slopes with the following exception. Erosion control matting is not necessary if the area is contained by perimeter erosion control devices such as silt fence, temporary sediment ditches, basins, etc. Matting should be secured in place with staples, stakes, or wherever possible, live stakes of native trees. Erosion control matting placed in riparian areas shall not contain a nylon mesh grid, which can impinge and entrap small animals. For the establishment of temporary groundcover within riparian areas, hydroseeding along with wood or cellulose based hydro mulch applied from a fertilizer- and limestone-free tank is allowable at the appropriate rate in conjunction with the erosion control measures. Discharging hydroseed mixtures and wood or cellulose mulch into surface waters in prohibited. Riparian areas are defined as a distance 25 feet landward from top of stream bank.

4. Strict adherence to the most recent version of NCDOT's Best Management Practices For Bridge Demolition and Removal approved by the US Army Corps of Engineers is a condition of the 401 Water Quality Certification.

5. Bridge deck drains shall not discharge directly into the stream. Stormwater shall be directed across the bridge and pre-treated through site-appropriate means (grassed swales, pre-formed scour holes, vegetated buffers, etc.) before entering the stream. Please refer to the most current version of *Stormwater Best Management Practices.*

6. During the construction of the project, no staging of equipment of any kind is permitted in waters of the U.S., or protected riparian buffers.

7. The dimension, pattern and profile of the stream above and below the crossing shall not be modified. Disturbed floodplains and streams shall be restored to natural geomorphic conditions.

8. The use of rip-rap above the Normal High Water Mark shall be minimized. Any rip-rap placed for stream stabilization shall be placed in stream channels in such a manner that it does not impede aquatic life passage.

* 9. The Permittee shall ensure that the final design drawings adhere to the permit and to the permit drawings submitted for approval.

10. Heavy equipment shall be operated from the banks rather than in the stream channel in order to minimize sedimentation and reduce the introduction of other pollutants into the stream.

R-40

11. All mechanized equipment operated near surface waters must be regularly inspected and maintained to prevent contamination of stream waters from fuels, lubricants, hydraulic fluids, or other toxic materials.

12. No rock, sand or other materials shall be dredged from the stream channel except where authorized by this certification.

13. All fill slopes located in jurisdictional wetlands shall be placed at slopes no flatter than 3:1, unless otherwise authorized by this certification.

14. A copy of this Water Quality Certification shall be maintained on the construction site at all times. In addition, the Water Quality Certification and all subsequent modifications, if any, shall be maintained with the Division Engineer and the on-site project manager.

15. The outside buffer, wetland or water boundary located within the construction corridor approved by this authorization shall be clearly marked by highly visible fencing prior to any land disturbing activities. Impacts to areas within the fencing are prohibited unless otherwise authorized by this certification.

16. The issuance of this certification does not exempt the Permittee from complying with any and all statutes, rules, regulations, or ordinances that may be imposed by other government agencies (i.e. local, state, and federal) having jurisdiction, including but not limited to applicable buffer rules, stormwater management rules, soil erosion and sedimentation control requirements, etc.

17. The Permittee shall report any violations of this certification to the Division of Water Quality within 24 hours of discovery.

* 18. Upon completion of the project (including any impacts at associated borrow or waste sites), the NCDOT Division shall complete and return the enclosed "Certification of Completion Form" to notify NCDWQ when all work included in the 401 Certification has been completed.

19. Native riparian vegetation must be reestablished in the riparian areas within the construction limits of the project by the end of the growing season following completion of construction.

20. There shall be no excavation from, or waste disposal into, jurisdictional wetlands or waters associated with this permit without appropriate modification. Should waste or borrow sites, or access roads to waste or borrow sites, be located in wetlands or streams, compensatory mitigation will be required since that is a direct impact from road construction activities.

If you wish to contest any statement in the attached Certification you must file a petition for an administrative hearing. You may obtain the petition form from the office of Administrative hearings. You must file the petition with the office of Administrative Hearings within sixty (60) days of receipt of this notice. A petition is considered filed when it is received in the office of Administrative Hearings during normal office hours. The Office of Administrative Hearings accepts filings Monday through Friday between the hours of 8:00am and 5:00pm, except for official state holidays. The original and one (1) copy of the petition must be filed with the Office of Administrative Hearings.

The petition may be faxed-provided the original and one copy of the document is received by the Office of Administrative Hearings within five (5) business days following the faxed transmission.
The mailing address for the Office of Administrative Hearings is:

Office of Administrative Hearings
6714 Mail Service Center
Raleigh, NC 27699-6714
Telephone: (919)-431-3000, Facsimile: (919)-431-3100

A copy of the petition must also be served on DENR as follows:

Mr. William Cary, General Counsel
Department of Environment and Natural Resources
1601 Mail Service Center

R-41

This letter completes the review of the Division of Water Quality under Section 401 of the Clean Water Act. If you have any questions, please contact Amy Euliss at (336)771-4959.

Sincerely,

for Charles Wakild
Director

Attachments [General Certification (permittee only) and Certificate of Completion form]

Cc: Scott Davis, Axiom Environmental (electronic copy only)
Kent Boyer, Division 9 Environmental Officer (electronic copy only)
John Thomas, US Army Corps of Engineers, Raleigh Field Office (electronic copy only)
Marla Chambers, NC Wildlife Resources Commission (electronic copy only)
Beth Harmon, Ecosystem Enhancement Program (electronic copy only)
Transportation Permitting Unit, (electronic copy only)
File Copy

R-42

North Carolina Department of Environment and Natural Resources
Division of Water Quality
Beverly Eaves Perdue, Governor
Charles Wakild, P.E, Director
Dee Freeman, Secretary

NCDWQ Project No.: _____ **County:** _____

Applicant: _____

Project Name: _____

Date of Issuance of 401 Water Quality Certification: _____

Certificate of Completion

Upon completion of all work approved within the 401 Water Quality Certification or applicable Buffer Rules, and any subsequent modifications, the applicant is required to return this certificate to the 401 Transportation Permitting Unit, North Carolina Division of Water Quality, 1650 Mail Service Center, Raleigh, NC, 27699-1650. This form may be returned to NCDWQ by the applicant, the applicant's authorized agent, **or** the project engineer. It is not necessary to send certificates from all of these.

Applicant's Certification

I, _____, hereby state that, to the best of my abilities, due care and diligence was used in the observation of the construction such that the construction was observed to be built within substantial compliance and intent of the 401 Water Quality Certification and Buffer Rules, the approved plans and specifications, and other supporting materials.

Signature: _____ Date: _____

Agent's Certification

I, _____, hereby state that, to the best of my abilities, due care and diligence was used in the observation of the construction such that the construction was observed to be built within substantial compliance and intent of the 401 Water Quality Certification and Buffer Rules, the approved plans and specifications, and other supporting materials.

Signature: _____ Date: _____

Engineer's Certification

_____ Partial _____ Final

I, _____, as a duly registered Professional Engineer in the State of North Carolina, having been authorized to observe (periodically, weekly, full time) the construction of the project,for the Permittee hereby state that, to the best of my abilities, due care and diligence was used in the observation of the construction such that the construction was observed to be built within substantial compliance and intent of the 401 Water Quality Certification and Buffer Rules, the approved plans and specifications, and other supporting materials.

Signature _____ Registration No. _____

Date _____

North Carolina Division of Water Quality, Winston-Salem Regional Office
Location: 585 Waughtown St. Winston-Salem, North Carolina 27107
Phone: 336-771-5000 \ FAX: 336-771-4630
Internet: www.ncwaterquality.org

An Equal Opportunity \ Affirmative Action Employer

One North Carolina Naturally

R-43

Water Quality Certification No. 3886

GENERAL CERTIFICATION FOR PROJECTS ELIGIBLE FOR U.S. ARMY CORPS OF ENGINEERS NATIONWIDE PERMIT NUMBER 14 (LINEAR TRANSPORTATION PROJECTS) AND REGIONAL GENERAL PERMIT 198200031 (WORK ASSOCIATED WITH BRIDGE CONSTRUCTION, MAINTENANCE OR REPAIR CONDUCTED BY NCDOT OR OTHER GOVERNMENT AGENCIES) AND RIPARIAN AREA PROTECTION RULES (BUFFER RULES)

Water Quality Certification Number 3886 is issued in conformity with the requirements of Section 401, Public Laws 92-500 and 95-217 of the United States and subject to the North Carolina Division of Water Quality (DWQ) Regulations in 15A NCAC 02H .0500 and 15A NCAC 02B .0200 for the discharge of fill material to waters and adjacent wetland areas or to wetland areas that are not a part of the surface tributary system to interstate waters or navigable waters of the United States (as described in 33 CFR 330 Appendix A (B) (14) of the Corps of Engineers regulations (Nationwide Permit No. 14 and Regional General Permit 198200031) and for the Riparian Area Protection Rules (Buffer Rules) in 15A NCAC 02B .0200.

The State of North Carolina certifies that the specified category of activity will not violate applicable portions of Sections 301, 302, 303, 306 and 307 of the Public Laws 92-500 and 95-217 if conducted in accordance with the conditions hereinafter set forth.

* Any proposed fill or modification of wetlands and/or waters, including streams, under this General Certification requires application to, and written approval from the Division of Water Quality except for the single family lot exemption described below.

Activities meeting any one (1) of the following thresholds or circumstances require *written approval* for a 401 Water Quality Certification from the Division of Water Quality (the "Division"):

a) Any temporary or permanent impacts to wetlands, open waters and/or streams, including stream relocations, except for construction of a driveway to a single family lot as long as the driveway involves *less than 25 feet* of temporary and/or permanent stream channel impacts, including any in-stream stabilization needed for the crossing; or

b) Any impact associated with a high density project (as defined in Item (A)(iv) of the ***401 Stormwater Requirements***) that is not subject to either a state stormwater program (such as, but not limited to, Coastal Counties, HQW, ORW or state-implemented Phase II NPDES) or a certified community's stormwater program; or

c) Any impact associated with a Notice of Violation or an enforcement action for violation(s) of DWQ Wetland Rules (15A NCAC 02H .0500), Isolated Wetland Rules (15A NCAC 02H .1300), DWQ Surface Water or Wetland Standards, or Riparian Buffer Rules (15A NCAC 02B .0200); or

* d) Any impacts to streams and/or buffers in the Neuse, Tar-Pamlico, or Catawba River Basins or in the Randleman, Jordan or Goose Creek Watersheds (or any other basin or watershed with Riparian Area Protection Rules [Buffer Rules] in effect at the time of application) *unless* the activities are listed as "EXEMPT" from these rules or a Buffer Authorization Certificate is issued through N.C. Division of Coastal Management (DCM) delegation for "ALLOWABLE" activities.

* In accordance with North Carolina General Statute 143-215.3D(e), written approval for a 401 Water Quality General Certification must include the appropriate fee. If a project also requires a CAMA Permit, then one payment to both agencies shall be submitted and will be the higher of the two fees.

Activities included in this General Certification that do not meet one of the thresholds listed above do not require written approval from the Division as long as they comply with

R-44

Water Quality Certification No. 3886

the Conditions of Certification listed below. If any of these Conditions cannot be met, then written approval from the Division is required.

Conditions of Certification:

1. No Impacts Beyond those Authorized in the Written Approval or Beyond the Threshold of Use of this Certification

   No waste, spoil, solids, or fill of any kind shall occur in wetlands, waters, or riparian areas beyond the footprint of the impacts depicted in the Pre-Construction Notification, as authorized in the written approval from the Division or beyond the thresholds established for use of this Certification without written authorization, including incidental impacts. All construction activities, including the design, installation, operation, and maintenance of sediment and erosion control Best Management Practices shall be performed so that no violations of state water quality standards, statutes, or rules occur. Approved plans and specifications for this project are incorporated by reference and are enforceable parts of this permit.

2. Standard Erosion and Sediment Control Practices

   Erosion and sediment control practices must be in full compliance with all specifications governing the proper design, installation and operation and maintenance of such Best Management Practices and if applicable, comply with the specific conditions and requirements of the NPDES Construction Stormwater Permit issued to the site:

   a. Design, installation, operation, and maintenance of the sediment and erosion control measures must be such that they equal or exceed the requirements specified in the most recent version of the *North Carolina Sediment and Erosion Control Manual*. The devices shall be maintained on all construction sites, borrow sites, and waste pile (spoil) projects, including contractor-owned or leased borrow pits associated with the project.

   b. For borrow pit sites, the erosion and sediment control measures must be designed, installed, operated, and maintained in accordance with the most recent version of the *North Carolina Surface Mining Manual*.

   c. Reclamation measures and implementation must comply with the reclamation in accordance with the requirements of the Sedimentation Pollution Control Act and the Mining Act of 1971.

   d. Sufficient materials required for stabilization and/or repair of erosion control measures and stormwater routing and treatment shall be on site at all times.

   e. If the project occurs in waters or watersheds classified as Primary Nursery Areas (PNAs), SA, WS-I, WS-II, High Quality (HQW), or Outstanding Resource (ORW) waters, then the sedimentation and erosion control designs must comply with the requirements set forth in 15A NCAC 04B .0124, *Design Standards in Sensitive Watersheds*.

R-45

Water Quality Certification No. 3886

3. No Sediment and Erosion Control Measures in Wetlands or Waters

   Sediment and erosion control measures shall not be placed in wetlands or waters. Exceptions to this condition require application submittal to and written approval by the Division. If placement of sediment and erosion control devices in wetlands and waters is unavoidable, then design and placement of temporary erosion control measures shall not be conducted in a manner that may result in dis-equilibrium of wetlands, stream beds, or banks, adjacent to or upstream and downstream of the above structures. All sediment and erosion control devices shall be removed and the natural grade restored within two (2) months of the date that the Division of Land Resources (DLR) or locally delegated program has released the specific area within the project.

4. Construction Stormwater Permit NCG010000

   An NPDES Construction Stormwater Permit is required for construction projects that disturb one (1) or more acres of land. This Permit allows stormwater to be discharged during land disturbing construction activities as stipulated in the conditions of the permit. If your project is covered by this permit, full compliance with permit conditions including the erosion & sedimentation control plan, inspections and maintenance, self-monitoring, record keeping and reporting requirements is required. A copy of the general permit (NCG010000), inspection log sheets, and other information may be found at http://portal.ncdenr.org/web/wq/ws/su/npdessw#tab-w .

   The North Carolina Department of Transportation (NCDOT) shall be required to be in full compliance with the conditions related to construction activities within the most recent version of their individual NPDES (NCS000250) stormwater permit.

5. Construction Moratoriums and Coordination

   If activities must occur during periods of high biological activity (i.e. sea turtle nesting, fish spawning, or bird nesting), then biological monitoring may be required at the request of other state or federal agencies and coordinated with these activities.

   All moratoriums on construction activities established by the NC Wildlife Resources Commission (WRC), US Fish and Wildlife Service (USFWS), NC Division of Marine Fisheries (DMF), or National Marine Fisheries Service (NMFS) to lessen impacts on trout, anadromous fish, larval/post-larval fishes and crustaceans, or other aquatic species of concern shall be implemented. Exceptions to this condition require written approval by the resource agency responsible for the given moratorium.

   Work within the twenty-five (25) designated trout counties or identified state or federal endangered or threatened species habitat shall be coordinated with the appropriate WRC, USFWS, NMFS, and/or DMF personnel.

6. Work in the Dry

   All work in or adjacent to stream waters shall be conducted so that the flowing stream does not come in contact with the disturbed area. Approved best management practices from the most current version of the NC Sediment and Erosion Control Manual, or the NC DOT Construction and Maintenance Activities Manual, such as sandbags, rock berms, cofferdams, and other diversion structures shall be used to minimize excavation in flowing water. Exceptions to this condition require application submittal to and written approval by the Division.

Water Quality Certification No. 3886

7. Riparian Area Protection (Buffer) Rules

   Activities located in the protected riparian areas (whether jurisdictional wetlands or not), within the Neuse, Tar-Pamlico, or Catawba River Basins or in the Randleman, Jordan, or Goose Creek Watersheds (or any other basin or watershed with buffer rules) shall be limited to "uses" identified within and constructed in accordance with 15A NCAC 02B .0233, .0259, .0243, .0250, .0267 and .0605, and shall be located, designed, constructed, and maintained to have minimal disturbance to protect water quality to the maximum extent practicable through the use of best management practices. All buffer rule requirements, including diffuse flow requirements, must be met.

8. If concrete is used during the construction, then all necessary measures shall be taken to prevent direct contact between uncured or curing concrete and waters of the state. Water that inadvertently contacts uncured concrete shall not be discharged to waters of the state due to the potential for elevated pH and possible aquatic life/ fish kills.

9. Bridge deck drains shall not discharge directly into the stream. Stormwater shall be directed across the bridge and pre-treated through site-appropriate means (grassed swales, pre-formed scour holes, vegetated buffers, etc.) before entering the stream. Please refer to the most current version of *Stormwater Best Management Practices*. Exceptions to this condition require written approval by the Division.

10. Compensatory Mitigation

    In accordance with 15A NCAC 02H .0506 (h), compensatory mitigation may be required for losses of equal to or greater than 150 linear feet of streams (intermittent and perennial) and/or equal to or greater than one (1) acre of wetlands. For linear public transportation projects, impacts equal to or exceeding 150 linear feet per stream shall require mitigation.

    Buffer mitigation may be required for any project with Buffer Rules in effect at the time of application for activities classified as "Allowable with Mitigation" or "Prohibited" within the Table of Uses.

    A determination of buffer, wetland, and stream mitigation requirements shall be made for any General Water Quality Certification for this Nationwide and/or Regional General Permit. Design and monitoring protocols shall follow the US Army Corps of Engineers Wilmington District *Stream Mitigation Guidelines* (April 2003) or its subsequent updates. Compensatory mitigation plans shall be submitted to the Division for written approval as required in those protocols. The mitigation plan must be implemented and/or constructed before any impacts occur on site. Alternatively, the Division will accept payment into an in-lieu fee program or a mitigation bank. In these cases, proof of payment shall be provided to the Division before any impacts occur on site.

11. Relocated stream designs should include the same dimensions, patterns, and profiles as the existing channel (or a stable reference reach if the existing channel is unstable), to the maximum extent practical. The new channel should be constructed in the dry and water shall not be turned into the new channel until the banks are stabilized. Vegetation used for bank stabilization shall be limited to native woody species, and should include establishment of a 30-foot wide wooded and an adjacent 20-foot wide vegetated buffer on both sides of the relocated channel to the maximum extent practical. A transitional phase incorporating appropriate erosion control matting materials and seedling establishment is allowable, however matting that incorporates plastic mesh and/or plastic twine shall not be used in wetlands, riparian buffers or floodplains as recommended by the North Carolina Sediment and Erosion Control Manual. Rip-rap, A-Jacks, concrete, gabions or other hard structures may be allowed if it is necessary to maintain the physical integrity of the stream; however, the applicant must provide written justification and any calculations used to determine the extent of rip-rap coverage. Please note that if the stream relocation is conducted as a stream restoration as defined in the US Army Corps of Engineers Wilmington District, April 2003 *Stream Mitigation Guidelines* (or its subsequent updates), the restored length may be used as compensatory mitigation for the impacts resulting from the relocation.

12. Stormwater Management Plan Requirements

    All applications shall address stormwater management throughout the entire project area per the 401 Stormwater Requirements, referenced herein as "**Attachment A**" at the end of this Certification.

13. Placement of Culverts and Other Structures in Waters and Wetlands

    Culverts required for this project shall be designed and installed in such a manner that the original stream profiles are not altered and allow for aquatic life movement during low flows. Existing stream dimensions (including the cross section dimensions, pattern, and longitudinal profile) must be maintained above and below locations of each culvert.

    Placement of culverts and other structures in waters and streams must be below the elevation of the streambed by one foot for all culverts with a diameter greater than 48 inches, and 20 percent of the culvert diameter for culverts having a diameter less than or equal to 48 inches, to allow low flow passage of water and aquatic life.

    When topographic constraints indicate culvert slopes of greater than 5%, culvert burial is not required, provided that all alternative options for flattening the slope have been investigated and aquatic life movement/ connectivity has been provided when possible (rock ladders, crossvanes, etc). Notification to the Division including supporting documentation to include a location map of the culvert, culvert profile drawings, and slope calculations shall be provided to the Division 60 days prior to the installation of the culvert.

    When bedrock is present in culvert locations, culvert burial is not required provided that there is sufficient documentation of the presence of bedrock. Notification to the Division including supporting documentation such as, but not limited to, a location map of the culvert, geotechnical reports, photographs, etc shall be provided to the Division a minimum of 60 days prior to the installation of the culvert. If bedrock is discovered during construction, then the Division shall be notified by phone or email within 24 hours of discovery.

    If other site-specific topographic constraints preclude the ability to bury the culverts as described above and/or it can be demonstrated that burying the culvert would result in destabilization of the channel, then exceptions to this condition require application submittal to, and written approval by, the Division of Water Quality, regardless of the total impacts to streams or wetlands from the project.

Installation of culverts in wetlands must ensure continuity of water movement and be designed to adequately accommodate high water or flood conditions. Additionally, when roadways, causeways, or other fill projects are constructed across FEMA-designated floodways or wetlands, openings such as culverts or bridges must be provided to maintain the natural hydrology of the system as well as prevent constriction of the floodway that may result in destabilization of streams or wetlands.

The establishment of native, woody vegetation and other soft stream bank stabilization techniques must be used where practicable instead of riprap or other bank hardening methods.

14. All temporary fill and culverts shall be removed and the impacted area returned to natural conditions within 60 days of the determination that the temporary impact is no longer necessary. The impacted areas shall be restored to original grade, including each stream's original cross sectional dimensions, plan form pattern, and longitudinal bed and bed profile, and the various sites shall be stabilized with natural woody vegetation (except for the approved maintenance areas) and restored to prevent erosion.

15. All temporary pipes/ culverts/ riprap pads etc, shall be installed in all streams as outlined in the most recent edition of the *North Carolina Sediment and Erosion Control Planning and Design Manual* or the *North Carolina Surface Mining Manual* so as not to restrict stream flow or cause dis-equilibrium during use of this General Certification.

16. Any riprap required for proper culvert placement, stream stabilization, or restoration of temporarily disturbed areas shall be restricted to the area directly impacted by the approved construction activity. All rip-rap shall buried and/or "keyed in" such that the original stream elevation and streambank contours are restored and maintained. Placement of rip-rap or other approved materials shall not result in de-stabilization of the stream bed or banks upstream or downstream of the area.

17. Any rip-rap used for stream stabilization shall be of a size and density so as not to be able to be carried off by wave, current action, or stream flows and consist of clean rock or masonry material free of debris or toxic pollutants. Rip-rap shall not be installed in the streambed except in specific areas required for velocity control and to ensure structural integrity of bank stabilization measures.

18. A one-time application of fertilizer to re-establish vegetation is allowed in disturbed areas including riparian buffers, but is restricted to no closer than 10 feet from top of bank of streams. Any fertilizer application must comply with all other Federal, State and Local regulations.

19. If this Water Quality Certification is used to access building sites, then all lots owned by the applicant must be buildable without additional impacts to streams or wetlands. The applicant is required to provide evidence that the lots are buildable without requiring additional impacts to wetlands, waters, or buffers if required to do so in writing by the Division. For road construction purposes, this Certification shall only be utilized from natural high ground to natural high ground.

20. Deed notifications or similar mechanisms shall be placed on all retained jurisdictional wetlands, waters, and protective buffers within the project boundaries in order to assure compliance for future wetland, water, and buffer impact. These mechanisms shall be put in place at the time of recording of the property or of individual lots, whichever is appropriate. A sample deed notification can be downloaded from the 401/Wetlands Unit web site at http://portal.ncdenr.org/web/wq/swp/ws/401/certsandpermits/apply/forms. The text of the sample deed notification may be modified as appropriate to suit to a specific project. Documentation of deed notifications shall be provided to the Division upon request.

Water Quality Certification No. 3886

* 21. If an environmental document is required under the National or State Environmental Policy Act (NEPA or SEPA), then this General Certification is not valid until a Finding of No Significant Impact (FONSI) or Record of Decision (ROD) is issued by the State Clearinghouse.

22. In the twenty (20) coastal counties, the appropriate DWQ Regional Office must be contacted to determine if Coastal Stormwater Regulations will be required.

23. This General Certification does not relieve the applicant of the responsibility to obtain all other required Federal, State, or Local approvals.

24. The applicant/permittee and their authorized agents shall conduct all activities in a manner consistent with State water quality standards (including any requirements resulting from compliance with §303(d) of the Clean Water Act), and any other appropriate requirements of State and Federal Law. If the Division determines that such standards or laws are not being met, including failure to sustain a designated or achieved use, or that State or Federal law is being violated, or that further conditions are necessary to assure compliance, then the Division may reevaluate and modify this General Water Quality Certification.

* 25. When written authorization is required for use of this certification, upon completion of all permitted impacts included within the approval and any subsequent modifications, the applicant shall be required to return the certificate of completion attached to the approval. One copy of the certificate shall be sent to the DWQ Central Office in Raleigh at 1650 Mail Service Center, Raleigh, NC, 27699-1650.

26. Additional site-specific conditions, including monitoring and/or modeling requirements, may be added to the written approval letter for projects proposed under this Water Quality Certification in order to ensure compliance with all applicable water quality and effluent standards.

27. This certification grants permission to the director, an authorized representative of the Director, or DENR staff, upon the presentation of proper credentials, to enter the property during normal business hours.

This General Certification shall expire on the same day as the expiration date of the corresponding Nationwide and/or Regional General Permit. The conditions in effect on the date of issuance of Certification for a specific project shall remain in effect for the life of the project, regardless of the expiration date of this Certification.

Non-compliance with or violation of the conditions herein set forth by a specific project may result in revocation of this General Certification for the project and may also result in criminal and/or civil penalties.

The Director of the North Carolina Division of Water Quality may require submission of a formal application for Individual Certification for any project in this category of activity if it is determined that the project is likely to have a significant adverse effect upon water quality, including state or federally listed endangered or threatened aquatic species, or degrade the waters so that existing uses of the wetland or downstream waters are precluded.

R-50

Water Quality Certification No. 3886

Public hearings may be held for specific applications or group of applications prior to a Certification decision if deemed in the public's best interest by the Director of the North Carolina Division of Water Quality.

Effective date: March 19, 2012

DIVISION OF WATER QUALITY

By

Charles Wakild, P.E.

Director

History Note: Water Quality Certification (WQC) Number 3886 issued March 12, 2012 replaces WQC Number 3820 issued April 6, 2010; WQC Number 3627 issued March 2007; WQC Number 3404 issued March 2003; WQC Number 3375 issued March 18, 2002; WQC Number 3289 issued June 1, 2000; WQC Number 3103 issued February 11, 1997; WQC Number 2732 issued May 1, 1992; WQC Number 2666 issued January 21, 1992; WQC Number 2177 issued November 5, 1987. This WQC is rescinded when the Corps of Engineers reauthorizes any of the corresponding Nationwide and/or Regional General Permits or when deemed appropriate by the Director of the Division of Water Quality.

R-51

Water Quality Certification No. 3886

Attachment A: 401 Stormwater Requirements

The requirements listed below shall be implemented in order to comply with Condition 12 of this General Certification. For the North Carolina Department of Transportation, compliance with NCDOT's Individual NPDES permit NCS000250 shall serve to satisfy the 401 and Isolated Wetland Stormwater Requirements.[1]

A. **Design and Implementation Requirements.** All projects, regardless of project area, amount of built-upon area or amount of jurisdictional impact, shall meet the following stormwater design requirements:

i. **Non-Erosive Discharge to Streams and Wetlands.** Stormwater conveyances that discharge to streams and wetlands must discharge at a non-erosive velocity prior to entering the stream or wetland during the peak flow from the ten-year storm.[2]

ii. **Vegetated Setbacks.** A 30-foot wide vegetated setback must be maintained adjacent to streams, rivers and tidal waters in areas that are not subject to a state Riparian Area Protection Rule or other more stringent vegetated setback requirements. The width of the setback shall be measured horizontally from the normal pool elevation of impounded structures, the top-of-bank of streams and rivers, and the mean high waterline of tidal waters, perpendicular to shoreline. Vegetated setback and filters required by state rules or local governments may be met concurrently with this requirement and may contain coastal, isolated or 404 jurisdictional wetlands. Non-jurisdictional portions of the vegetated setback may be cleared and graded, but must be planted with and maintained in grass or other vegetative or plant material.[3]

iii. **Construction and Operation.** The stormwater management plan must be constructed and operational before any permanent building or other structure is occupied or utilized at the site. The stormwater management plan, including drainage patterns, must be maintained in perpetuity.[4]

iv. **Coordination with Other Stormwater Programs.** Projects that are subject to another Division of Water Quality (DWQ) stormwater program, including (but not limited to) the 20 Coastal Counties, HQW, ORW or state-implemented Phase II NPDES, or a Certified Community's stormwater management program, must be constructed and maintained in compliance with the approved stormwater management plan.[5]

v. **Stormwater Design Requirements for Projects Not Covered Under Item (iv).** Projects that are not subject to another DWQ stormwater program or a Certified Community's stormwater program shall meet all of the following requirements:

a. **Low Density.** A site is low density if all the following requirements are met:

1. The development has a built upon area of twenty-four percent (24%) or less, considering both current and future development. When determining the amount of built upon area, coastal wetlands shall be included; however, ponds, lakes and rivers as specified in North Carolina's Schedule of Classifications shall be excluded. If a portion of project has a density greater than 24%, the higher density area must be located in an upland area and away from surface waters and drainageways to the maximum extent practicable.[6]

2. All stormwater runoff from the built upon areas is transported primarily via vegetated conveyances designed in accordance with the most recent version of the *NC DWQ Stormwater Best Management Practices Manual.* Alternative designs may be approved if the applicant can show that the design provides

equal or better water quality protection than the practices specified in the manual. The project must not include a stormwater collection system (such as piped conveyances) as defined in 15A NCAC 02B .0202(60).[7]

b. **High Density.** Projects that do not meet the Low Density requirements shall meet the following requirements:

1. Stormwater runoff from the entire site must be treated by structural stormwater controls (BMPs) that are designed to remove eighty-five percent (85%) of the average annual amount of Total Suspended Solids (TSS). Stormwater runoff that drains directly to Nutrient Sensitive Waters (NSW) must also be treated to remove thirty percent (30%) of Total Nitrogen (TN) and Total Phosphorus (TP).[8]

2. All BMPs must be designed in accordance with the version of the *NC DWQ Stormwater Best Management Practices Manual* that is in place on the date of stormwater management plan submittal. Alternative designs may be approved if the applicant can show that the design provides equal or better water quality protection than the practices specified in the manual.[9]

3. DWQ may add specific stormwater management requirements on a case-by-case basis in order to ensure that a proposed activity will not violate water quality standards.[10]

4. DWQ may approve Low Impact Developments (LIDs) that meet the guidance set forth in the *Low Impact Development: A Guidebook for North Carolina.*[11]

5. Proposed new development undertaken by a local government solely as a public road project shall follow the requirements of the NC DOT BMP Toolbox rather than Items (1)-(4) above.[12]

B. **Submittal Requirements.** The submittal requirements listed below apply only to projects that require written authorization as indicated in the applicable General Certification as well as projects that require an Isolated Wetlands Permit. **Any required documentation shall be sent to the Wetlands, Buffers and Stormwater Compliance and Permitting Unit at 1650 Mail Service Center, Raleigh, NC 27699-1650.**

i. **Projects that are Subject to Another DWQ Stormwater Program:** If the project is subject to another DWQ stormwater program, such as the 20 Coastal Counties, HQW, ORW or state-implemented Phase II NPDES, then the applicant shall submit a copy of the stormwater approval letter before any impacts occur on site.[13]

ii. **Projects that are Subject to a Certified Community's Stormwater Program.** If the project is subject to a certified local government's stormwater program, then the applicant shall submit one set of approved stormwater management plan details and calculations with documentation of the local government's approval before any impacts occur on site.[5]

iii. **Projects Not Covered Under Items (i) or (ii).** If the project is not subject to another DWQ Stormwater Program or a Certified Community's stormwater program, then it shall be reviewed and approved by the DWQ through the Water Quality Certification authorization process.

a. **Low Density.** For low density projects, the applicant shall submit two copies of the DWQ Low Density Supplement Form with all required items.[13]

b. **High Density.** For high density projects, the applicant shall submit two copies of a DWQ BMP Supplement Form and all required items at the specified scales for each BMP that is proposed.[13]

iv. **Phasing.** Stormwater management plans may be phased on a case-by-case basis, with the submittal of a final stormwater management plan per Items (i)-(iii) above required for the current phase and a conceptual stormwater management plan for the future phase(s). The stormwater management plan for each future phase must be approved by the appropriate entity before construction of that phase is commenced. The approved stormwater management plan for each future phase must be constructed and operational before any permanent building or other structure associated with that phase is occupied.[14]

v. **Stormwater Management Plan Modifications.** The stormwater management plan may not be modified without prior written authorization from the entity that approved the plan. If the project is within a Certified Community, then the applicant shall submit one set of approved stormwater management plan details and calculations with documentation of the local government's approval for record-keeping purposes. If the project is subject to DWQ review, then the applicant shall submit two copies of the appropriate Supplement Forms per Item (iii) above for any BMPs that have been modified for DWQ's review and approval.[15]

---

[1] The stormwater requirement for 401 applications is codified in 15A NCAC 02H .0506(b)(5) and (c)(5).

[2] Non erosive discharge rates are required in SL 2008-211§2(b)(1). The 10-year design storm standard is codified in 15A NCAC 02H .1008(f)(2) and .1008(g)(1).

[3] 30-foot vegetated setbacks are required in SL 2006-246§9(d), SL 2008-211§2(b), 15A NCAC 02H .1006(2)(c) and .1007(1)(a).

[4] Construction and maintenance of the stormwater plan is necessary to satisfy 15A NCAC 02H .0506(b)(5).

[5] Conveys application procedure to streamline the permitting process and reduce any unnecessary duplication in the review of stormwater management plans.

[6] Low density built upon area thresholds are set in SL 2006-246§9(c) and SL 2008-211§2(b).

[7] The requirement for low density development to use vegetated conveyances is codified in SL 2006-246§9(c), SL 2008-211§2(b), 15A NCAC 02H .1006(2)(b) and .1007(1)(a). The Stormwater BMP Manual is also referenced in 15A NCAC 02B .0265(3)(a) and .0277(4)(e).

[8] 85% TSS removal is required in SL 2006-246§9(d), SL 2008-211§2(b), 15A NCAC 02H .1006(2)(c), 15A NCAC 02H .1007(1)(a). The 30% TN and TP removal requirements for NSW waters are set forth in 15A NCAC 02B .0232, 15A NCAC 02B .0257(a)(1), 15A NCAC 02B .0265(3)(a) and 15A NCAC 02B .0277(4).

[9] The Stormwater BMP Manual is also referenced in 15A NCAC 02B .0265(3)(a) and .0277(4)(e).

[10] The requirement for DWQ to ensure that water quality standards are protected before issuing a 401 certification is codified in 15A NCAC 02H .0506.

[11] The LID Toolbox is also referenced in 15A NCAC 02B .0277(4)(g).

[12] The term "public road project" is defined in15A NCAC 02B .0265(3)(a).

[13] Conveys application procedure to streamline the permitting process.

[14] Phased development is addressed as a "common plan of development" in 15A NCAC 02H .1003(3).

[15] Procedures for modifying stormwater plans are set forth in 15A NCAC 02H .1011.

R-54

Water Quality Certification No. 3893

GENERAL CERTIFICATION FOR PROJECTS ELIGIBLE FOR U.S. ARMY CORPS OF ENGINEERS NATIONWIDE PERMIT NUMBER 33 (TEMPORARY CONSTRUCTION, ACCESS AND DEWATERING) AND RIPARIAN AREA PROTECTION RULES (BUFFER RULES)

Water Quality Certification Number 3893 is issued in conformity with the requirements of Section 401, Public Laws 92-500 and 95-217 of the United States and subject to the North Carolina Division of Water Quality Regulations in 15A NCAC 02H .0500 and 15A NCAC 02B .0200 for the discharge of fill material to waters and wetland areas as described in 33 CFR 330 Appendix A (B) (33) and for the Riparian Area Protection Rules (Buffer Rules) in 15A NCAC 02B .0200.

The State of North Carolina certifies that the specified category of activity will not violate applicable portions of Sections 301, 302, 303, 306 and 307 of the Public Laws 92-500 and 95-217 if conducted in accordance with the conditions hereinafter set forth.

Activities meeting any one (1) of the following thresholds or circumstances require *written approval* for a 401 Water Quality Certification from the Division of Water Quality (the "Division"):

a. Any stream relocation; or
b. Any impact associated with a Notice of Violation or an enforcement action for violation(s) of DWQ Wetland Rules (15A NCAC 02H .0500), Isolated Wetland Rules (15A NCAC 02H .1300), DWQ Surface Water or Wetland Standards, or Riparian Buffer Rules (15A NCAC 02B .0200); or
* c. Any impacts to streams and/or buffers in the Neuse, Tar-Pamlico, or Catawba River Basins or in the Randleman, Jordan or Goose Creek Watersheds (or any other basin or watershed with Riparian Area Protection Rules [Buffer Rules] in effect at the time of application) *unless* the activities are listed as "EXEMPT" from these rules or a Buffer Authorization Certificate is issued through N.C. Division of Coastal Management (DCM) delegation for "ALLOWABLE" activities.

* In accordance with North Carolina General Statute 143-215.3D(e), written approval for a 401 Water Quality General Certification must include the appropriate fee. If a project also requires a CAMA Permit, then one payment to both agencies shall be submitted and will be the higher of the two fees.

Activities included in this General Certification that do not meet one of the thresholds listed above do not require written approval from the Division as long as they comply with the Conditions of Certification listed below. If any of these Conditions cannot be met, then written approval from the Division is required.

Conditions of Certification:

1. No Impacts Beyond those Authorized in the Written Approval or Beyond the Threshold of Use of this Certification

   No waste, spoil, solids, or fill of any kind shall occur in wetlands, waters, or riparian areas beyond the footprint of the impacts depicted in the Pre-Construction Notification, as authorized in the written approval from the Division or beyond the thresholds established for use of this Certification without written authorization, including incidental impacts. All construction activities, including the design, installation, operation, and maintenance of sediment and erosion control Best Management Practices shall be performed so that no violations of state water quality standards, statutes, or rules occur. Approved plans and specifications for this project are incorporated by reference and are enforceable parts of this permit.

2. Standard Erosion and Sediment Control Practices

   Erosion and sediment control practices must be in full compliance with all specifications governing the proper design, installation and operation and maintenance of such Best Management Practices and if applicable, comply with the specific conditions and requirements of the NPDES Construction Stormwater Permit issued to the site:

   a. Design, installation, operation, and maintenance of the sediment and erosion control measures must be such that they equal or exceed the requirements specified in the most recent version of the *North Carolina Sediment and Erosion Control Manual.* The devices shall be maintained on all construction sites, borrow sites, and waste pile (spoil) projects, including contractor-owned or leased borrow pits associated with the project.

   b. For borrow pit sites, the erosion and sediment control measures must be designed, installed, operated, and maintained in accordance with the most recent version of the *North Carolina Surface Mining Manual.*

   c. Reclamation measures and implementation must comply with the reclamation in accordance with the requirements of the Sedimentation Pollution Control Act and the Mining Act of 1971.

   d. Sufficient materials required for stabilization and/or repair of erosion control measures and stormwater routing and treatment shall be on site at all times.

   e. If the project occurs in waters or watersheds classified as Primary Nursery Areas (PNAs), SA, WS-I, WS-II, High Quality (HQW), or Outstanding Resource (ORW) waters, then the sedimentation and erosion control designs must comply with the requirements set forth in 15A NCAC 04B .0124, *Design Standards in Sensitive Watersheds.*

3. No Sediment and Erosion Control Measures in Wetlands or Waters

   Sediment and erosion control measures shall not be placed in wetlands or waters. Exceptions to this condition require application submittal to and written approval by the Division. If placement of sediment and erosion control devices in wetlands and waters is unavoidable, then design and placement of temporary erosion control measures shall not be conducted in a manner that may result in dis-equilibrium of wetlands, stream beds, or banks, adjacent to or upstream and downstream of the above structures. All sediment and erosion control devices shall be removed and the natural grade restored within two (2) months of the date that the Division of Land Resources (DLR) or locally delegated program has released the specific area within the project.

4. Construction Stormwater Permit NCG010000

   An NPDES Construction Stormwater Permit is required for construction projects that disturb one (1) or more acres of land. This Permit allows stormwater to be discharged during land disturbing construction activities as stipulated in the conditions of the permit. If your project is covered by this permit, full compliance with permit conditions including the erosion & sedimentation control plan, inspections and maintenance, self-monitoring, record keeping and reporting requirements is required. A copy of the general permit (NCG010000), inspection log sheets, and other information may be found at http://portal.ncdenr.org/web/wq/ws/su/npdessw#tab-w .

   The North Carolina Department of Transportation (NCDOT) shall be required to be in full compliance with the conditions related to construction activities within the most recent version of their individual NPDES (NCS000250) stormwater permit.

Water Quality Certification No. 3893

5. Construction Moratoriums and Coordination

   If activities must occur during periods of high biological activity (i.e. sea turtle nesting, fish spawning, or bird nesting), then biological monitoring may be required at the request of other state or federal agencies and coordinated with these activities.

   All moratoriums on construction activities established by the NC Wildlife Resources Commission (WRC), US Fish and Wildlife Service (USFWS), NC Division of Marine Fisheries (DMF), or National Marine Fisheries Service (NMFS) to lessen impacts on trout, anadromous fish, larval/post-larval fishes and crustaceans, or other aquatic species of concern shall be implemented. Exceptions to this condition require written approval by the resource agency responsible for the given moratorium.

   Work within the twenty-five (25) designated trout counties or identified state or federal endangered or threatened species habitat shall be coordinated with the appropriate WRC, USFWS, NMFS, and/or DMF personnel.

6. Work in the Dry

   All work in or adjacent to stream waters shall be conducted so that the flowing stream does not come in contact with the disturbed area. Approved best management practices from the most current version of the NC Sediment and Erosion Control Manual, or the NC DOT Construction and Maintenance Activities Manual, such as sandbags, rock berms, cofferdams, and other diversion structures shall be used to minimize excavation in flowing water. Exceptions to this condition require application submittal to and written approval by the Division.

7. Riparian Area Protection (Buffer) Rules

   Activities located in the protected riparian areas (whether jurisdictional wetlands or not), within the Neuse, Tar-Pamlico, or Catawba River Basins or in the Randleman, Jordan, or Goose Creek Watersheds (or any other basin or watershed with buffer rules) shall be limited to "uses" identified within and constructed in accordance with 15A NCAC 02B .0233, .0259, .0243, .0250, .0267 and .0605, and shall be located, designed, constructed, and maintained to have minimal disturbance to protect water quality to the maximum extent practicable through the use of best management practices. All buffer rule requirements, including diffuse flow requirements, must be met.

8. If concrete is used during the construction, then all necessary measures shall be taken to prevent direct contact between uncured or curing concrete and waters of the state. Water that inadvertently contacts uncured concrete shall not be discharged to waters of the state due to the potential for elevated pH and possible aquatic life/ fish kills.

9. Bridge deck drains shall not discharge directly into the stream. Stormwater shall be directed across the bridge and pre-treated through site-appropriate means (grassed swales, pre-formed scour holes, vegetated buffers, etc.) before entering the stream. Please refer to the most current version of *Stormwater Best Management Practices.* Exceptions to this condition require written approval by the Division.

10. Placement of culverts and other structures in Waters and Wetlands

    Culverts required for this project shall be designed and installed in such a manner that the original stream profiles are not altered and allow for aquatic life movement during low flows. Existing stream dimensions (including the cross section dimensions, pattern, and longitudinal profile) must be maintained above and below locations of each culvert.

Placement of culverts and other structures in waters and streams must be below the elevation of the streambed by one foot for all culverts with a diameter greater than 48 inches, and 20 percent of the culvert diameter for culverts having a diameter less than or equal to 48 inches, to allow low flow passage of water and aquatic life.

When topographic constraints indicate culvert slopes of greater than 5%, culvert burial is not required, provided that all alternative options for flattening the slope have been investigated and aquatic life movement/ connectivity has been provided when possible (rock ladders, crossvanes, etc). Notification to the Division including supporting documentation to include a location map of the culvert, culvert profile drawings, and slope calculations shall be provided to the Division 60 days prior to the installation of the culvert.

When bedrock is present in culvert locations, culvert burial is not required provided that there is sufficient documentation of the presence of bedrock. Notification to the Division including supporting documentation such as, but not limited to, a location map of the culvert, geotechnical reports, photographs, etc shall be provided to the Division a minimum of 60 days prior to the installation of the culvert. If bedrock is discovered during construction, then the Division shall be notified by phone or email within 24 hours of discovery.

If other site-specific topographic constraints preclude the ability to bury the culverts as described above and/or it can be demonstrated that burying the culvert would result in destabilization of the channel, then exceptions to this condition require application submittal to, and written approval by, the Division of Water Quality, regardless of the total impacts to streams or wetlands from the project.

Installation of culverts in wetlands must ensure continuity of water movement and be designed to adequately accommodate high water or flood conditions. Additionally, when roadways, causeways, or other fill projects are constructed across FEMA-designated floodways or wetlands, openings such as culverts or bridges must be provided to maintain the natural hydrology of the system as well as prevent constriction of the floodway that may result in destabilization of streams or wetlands.

The establishment of native, woody vegetation and other soft stream bank stabilization techniques must be used where practicable instead of riprap or other bank hardening methods.

* 11. Compensatory Mitigation

In accordance with 15A NCAC 02H .0506 (h), compensatory mitigation may be required for losses of equal to or greater than 150 linear feet of streams (intermittent and perennial) and/or equal to or greater than one (1) acre of wetlands. For linear public transportation projects, impacts equal to or exceeding 150 linear feet per stream shall require mitigation.

Buffer mitigation may be required for any project with Buffer Rules in effect at the time of application for activities classified as "Allowable with Mitigation" or "Prohibited" within the Table of Uses.

A determination of buffer, wetland, and stream mitigation requirements shall be made for any General Water Quality Certification for this Nationwide and/or Regional General Permit. Design and monitoring protocols shall follow the US Army Corps of Engineers Wilmington District *Stream Mitigation Guidelines* (April 2003) or its subsequent updates. Compensatory mitigation plans shall be submitted to the Division for written approval as required in those protocols. The mitigation plan must be implemented and/or constructed before any impacts occur on site. Alternatively, the Division will accept payment into an in-lieu fee program or a mitigation bank. In these cases, proof of payment shall be provided to the Division before any impacts occur on site.

12. Relocated stream designs should include the same dimensions, patterns, and profiles as the existing channel (or a stable reference reach if the existing channel is unstable), to the maximum extent practical. The new channel should be constructed in the dry and water shall not be turned into the new channel until the banks are stabilized. Vegetation used for bank stabilization shall be limited to native woody species, and should include establishment of a 30-foot wide wooded and an adjacent 20-foot wide vegetated buffer on both sides of the relocated channel to the maximum extent practical. A transitional phase incorporating appropriate erosion control matting materials and seedling establishment is allowable, however matting that incorporates plastic mesh and/or plastic twine shall not be used in wetlands, riparian buffers or floodplains as recommended by the North Carolina Sediment and Erosion Control Manual. Rip-rap, A-Jacks, concrete, gabions or other hard structures may be allowed if it is necessary to maintain the physical integrity of the stream; however, the applicant must provide written justification and any calculations used to determine the extent of rip-rap coverage. Please note that if the stream relocation is conducted as a stream restoration as defined in the US Army Corps of Engineers Wilmington District, April 2003 *Stream Mitigation Guidelines* (or its subsequent updates), the restored length may be used as compensatory mitigation for the impacts resulting from the relocation.

13. All temporary fill and culverts shall be removed and the impacted area returned to natural conditions within 60 days of the determination that the temporary impact is no longer necessary. The impacted areas shall be restored to original grade, including each stream's original cross sectional dimensions, plan form pattern, and longitudinal bed and bed profile, and the various sites shall be stabilized with natural woody vegetation (except for the approved maintenance areas) and restored to prevent erosion.

14. Pipes shall be installed under the road or causeway in all streams to carry at least the 25-year storm event as outlined in the most recent edition of the *North Carolina Sediment and Erosion Control Planning and Design Manual* or the *North Carolina Surface Mining Manual* so as not to restrict stream flow during use of this General Certification.

* 15. If an environmental document is required under the National or State Environmental Policy Act (NEPA or SEPA), then this General Certification is not valid until a Finding of No Significant Impact (FONSI) or Record of Decision (ROD) is issued by the State Clearinghouse.

16. In the twenty (20) coastal counties, the appropriate DWQ Regional Office must be contacted to determine if Coastal Stormwater Regulations will be required.

17. This General Certification does not relieve the applicant of the responsibility to obtain all other required Federal, State, or Local approvals.

18. The applicant/permittee and their authorized agents shall conduct all activities in a manner consistent with State water quality standards (including any requirements resulting from compliance with §303(d) of the Clean Water Act), and any other appropriate requirements of State and Federal Law. If the Division determines that such standards or laws are not being met, including failure to sustain a designated or achieved use, or that State or Federal law is being violated, or that further conditions are necessary to assure compliance, then the Division may reevaluate and modify this General Water Quality Certification.

* 19. When written authorization is required for use of this certification, upon completion of all permitted impacts included within the approval and any subsequent modifications, the applicant shall be required to return the certificate of completion attached to the approval. One copy of the certificate shall be sent to the DWQ Central Office in Raleigh at 1650 Mail Service Center, Raleigh, NC, 27699-1650.

R-59

Water Quality Certification No. 3893

20. Additional site-specific conditions, including monitoring and/or modeling requirements, may be added to the written approval letter for projects proposed under this Water Quality Certification in order to ensure compliance with all applicable water quality and effluent standards.

21. This certification grants permission to the director, an authorized representative of the Director, or DENR staff, upon the presentation of proper credentials, to enter the property during normal business hours.

This General Certification shall expire on the same day as the expiration date of the corresponding Nationwide and/or Regional General Permit. The conditions in effect on the date of issuance of Certification for a specific project shall remain in effect for the life of the project, regardless of the expiration date of this Certification.

Non-compliance with or violation of the conditions herein set forth by a specific project may result in revocation of this General Certification for the project and may also result in criminal and/or civil penalties.

The Director of the North Carolina Division of Water Quality may require submission of a formal application for Individual Certification for any project in this category of activity if it is determined that the project is likely to have a significant adverse effect upon water quality, including state or federally listed endangered or threatened aquatic species, or degrade the waters so that existing uses of the wetland or downstream waters are precluded.

Public hearings may be held for specific applications or group of applications prior to a Certification decision if deemed in the public's best interest by the Director of the North Carolina Division of Water Quality.

Effective date: March 19, 2012

DIVISION OF WATER QUALITY

By

Max Martin for

Charles Wakild, P.E.

Director

History Note: Water Quality Certification (WQC) Number 3893 issued March 19, 2012 replaces WQC Number 3688 issued November 1, 2007; WQC Number 3634 issued March 19, 2007; WQC Number 3366 issued March 18, 2002; WQC Number 3114 issued February 11, 1997; and WQC Number 2727 issued May 1, 1992. This General Certification is rescinded when the Corps of Engineers reauthorizes any of the corresponding Nationwide and/or Regional General Permits or when deemed appropriate by the Director of the Division of Water Quality.

R-60

PROPERTY OWNERS

NAMES AND ADDRESSES

PARCEL NO.	NAMES	ADDRESSES
9A	BEATRICE B. STILLER	730 PEACH ORCHARD LANE SALISBURY, NC 28145
7A	WILLIAM MARSHALL ISENHOUR	305 PEELER ROAD SALISBURY, NC 28145

WETLAND/ STREAM IMPACTS

NCDOT

RAIL DIVISION

ROWAN COUNTY

PROJECT: 52000.1.STR03T1B (P-5206A)

PEELER ROAD GRADE SEPARATION OVER NCRR/NS FROM REID TO NORTH KANNAPOLIS

SHEET OF 7/3/12

WETLAND PERMIT IMPACT SUMMARY

Site No.	Station (From/To)	Structure Size / Type	WETLAND IMPACTS: Permanent Fill In Wetlands (ac)	Temp. Fill In Wetlands (ac)	Excavation in Wetlands (ac)	Mechanized Clearing in Wetlands (ac)	Hand Clearing in Wetlands (ac)	SURFACE WATER IMPACTS: Permanent SW impacts (ac)	Temp. SW impacts (ac)	Existing Channel Impacts Permanent (ft)	Existing Channel Impacts Temp. (ft)	Natural Stream Design (ft)
1	27+93 to 30+96 -L-	48" RCP	0.09			0.01		0.01	<0.01	221	52	
TOTALS:			0.09			0.01		0.01	<0.01	221	52	

NC DEPARTMENT OF TRANSPORTATION
DIVISION OF HIGHWAYS

ROWAN COUNTY
WBS - 52000.1.STR03T1B (P-5206A)

SHEET 8/29/2012

ATN Revised 3/31/05

R-61

0151DEL_P10b1

CONTRACT:

TIP PROJECT: P-5206A

See Sheet 1-A For Index of Sheets
See Sheet 1-B For Conventional Symbols

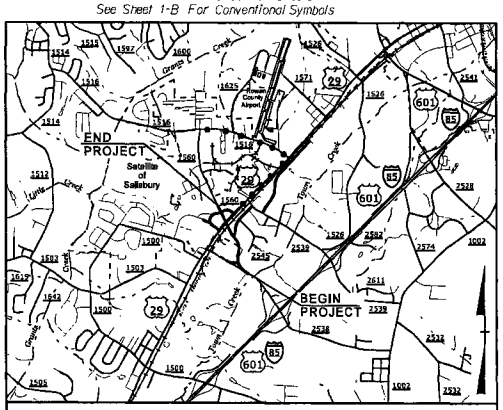
END PROJECT
Satellite of Salisbury
BEGIN PROJECT
Grants Creek
Town Creek
Second Creek
Third Creek
Fourth Creek
Fifth Creek
Sixth Creek
Seventh Creek
Eighth Creek
Ninth Creek
Tenth Creek
Eleventh Creek
Twelfth Creek
Thirteenth Creek
Fourteenth Creek
Fifteenth Creek
Sixteenth Creek
Seventeenth Creek
Eighteenth Creek
Nineteenth Creek
Twentieth Creek
Twenty-First Creek
Twenty-Second Creek
Twenty-Third Creek
Twenty-Fourth Creek
Twenty-Fifth Creek
Twenty-Sixth Creek
Twenty-Seventh Creek
Twenty-Eighth Creek
Twenty-Ninth Creek
Thirtieth Creek
Thirty-First Creek
Thirty-Second Creek
Thirty-Third Creek
Thirty-Fourth Creek
Thirty-Fifth Creek
Thirty-Sixth Creek
Thirty-Seventh Creek
Thirty-Eighth Creek
Thirty-Ninth Creek
Fortieth Creek
Forty-First Creek
Forty-Second Creek
Forty-Third Creek
Forty-Fourth Creek
Forty-Fifth Creek
Forty-Sixth Creek
Forty-Seventh Creek
Forty-Eighth Creek
Forty-Ninth Creek
Fiftieth Creek
Fifty-First Creek
Fifty-Second Creek
Fifty-Third Creek
Fifty-Fourth Creek
Fifty-Fifth Creek
Fifty-Sixth Creek
Fifty-Seventh Creek
Fifty-Eighth Creek
Fifty-Ninth Creek
Sixtieth Creek
Sixty-First Creek
Sixty-Second Creek
Sixty-Third Creek
Sixty-Fourth Creek
Sixty-Fifth Creek
Sixty-Sixth Creek
Sixty-Seventh Creek
Sixty-Eighth Creek
Sixty-Ninth Creek
Seventieth Creek
Seventy-First Creek
Seventy-Second Creek
Seventy-Third Creek
Seventy-Fourth Creek
Seventy-Fifth Creek
Seventy-Sixth Creek
Seventy-Seventh Creek
Seventy-Eighth Creek
Seventy-Ninth Creek
Eightieth Creek
Eighty-First Creek
Eighty-Second Creek
Eighty-Third Creek
Eighty-Fourth Creek
Eighty-Fifth Creek
Eighty-Sixth Creek
Eighty-Seventh Creek
Eighty-Eighth Creek
Eighty-Ninth Creek
Ninetieth Creek
Ninety-First Creek
Ninety-Second Creek
Ninety-Third Creek
Ninety-Fourth Creek
Ninety-Fifth Creek
Ninety-Sixth Creek
Ninety-Seventh Creek
Ninety-Eighth Creek
Ninety-Ninth Creek
One Hundredth Creek
One Hundred First Creek
One Hundred Second Creek
One Hundred Third Creek
One Hundred Fourth Creek
One Hundred Fifth Creek
One Hundred Sixth Creek
One Hundred Seventh Creek
One Hundred Eighth Creek
One Hundred Ninth Creek
One Hundred Tenth Creek
One Hundred Eleventh Creek
One Hundred Twelfth Creek
One Hundred Thirteenth Creek
One Hundred Fourteenth Creek
One Hundred Fifteenth Creek
One Hundred Sixteenth Creek
One Hundred Seventeenth Creek
One Hundred Eighteenth Creek
One Hundred Nineteenth Creek
One Hundred Twentieth Creek
One Hundred Twenty-First Creek
One Hundred Twenty-Second Creek
One Hundred Twenty-Third Creek
One Hundred Twenty-Fourth Creek
One Hundred Twenty-Fifth Creek
One Hundred Twenty-Sixth Creek
One Hundred Twenty-Seventh Creek
One Hundred Twenty-Eighth Creek
One Hundred Twenty-Ninth Creek
One Hundred Thirtieth Creek
One Hundred Thirty-First Creek
One Hundred Thirty-Second Creek
One Hundred Thirty-Third Creek
One Hundred Thirty-Fourth Creek
One Hundred Thirty-Fifth Creek
One Hundred Thirty-Sixth Creek
One Hundred Thirty-Seventh Creek
One Hundred Thirty-Eighth Creek
One Hundred Thirty-Ninth Creek
One Hundred Fortieth Creek
One Hundred Forty-First Creek
One Hundred Forty-Second Creek
One Hundred Forty-Third Creek
One Hundred Forty-Fourth Creek
One Hundred Forty-Fifth Creek
One Hundred Forty-Sixth Creek
One Hundred Forty-Seventh Creek
One Hundred Forty-Eighth Creek
One Hundred Forty-Ninth Creek
One Hundred Fiftieth Creek
One Hundred Fifty-First Creek
One Hundred Fifty-Second Creek
One Hundred Fifty-Third Creek
One Hundred Fifty-Fourth Creek
One Hundred Fifty-Fifth Creek
One Hundred Fifty-Sixth Creek
One Hundred Fifty-Seventh Creek
One Hundred Fifty-Eighth Creek
One Hundred Fifty-Ninth Creek
One Hundred Sixtieth Creek
One Hundred Sixty-First Creek
One Hundred Sixty-Second Creek
One Hundred Sixty-Third Creek
One Hundred Sixty-Fourth Creek
One Hundred Sixty-Fifth Creek
One Hundred Sixty-Sixth Creek
One Hundred Sixty-Seventh Creek
One Hundred Sixty-Eighth Creek
One Hundred Sixty-Ninth Creek
One Hundred Seventieth Creek
One Hundred Seventy-First Creek
One Hundred Seventy-Second Creek
One Hundred Seventy-Third Creek
One Hundred Seventy-Fourth Creek
One Hundred Seventy-Fifth Creek
One Hundred Seventy-Sixth Creek
One Hundred Seventy-Seventh Creek
One Hundred Seventy-Eighth Creek
One Hundred Seventy-Ninth Creek
One Hundred Eightieth Creek
One Hundred Eighty-First Creek
One Hundred Eighty-Second Creek
One Hundred Eighty-Third Creek
One Hundred Eighty-Fourth Creek
One Hundred Eighty-Fifth Creek
One Hundred Eighty-Sixth Creek
One Hundred Eighty-Seventh Creek
One Hundred Eighty-Eighth Creek
One Hundred Eighty-Ninth Creek
One Hundred Ninetieth Creek
One Hundred Ninety-First Creek
One Hundred Ninety-Second Creek
One Hundred Ninety-Third Creek
One Hundred Ninety-Fourth Creek
One Hundred Ninety-Fifth Creek
One Hundred Ninety-Sixth Creek
One Hundred Ninety-Seventh Creek
One Hundred Ninety-Eighth Creek
One Hundred Ninety-Ninth Creek
Two Hundredth Creek
Two Hundred First Creek
Two Hundred Second Creek
Two Hundred Third Creek
Two Hundred Fourth Creek
Two Hundred Fifth Creek
Two Hundred Sixth Creek
Two Hundred Seventh Creek
Two Hundred Eighth Creek
Two Hundred Ninth Creek
Two Hundred Tenth Creek
Two Hundred Eleventh Creek
Two Hundred Twelfth Creek
Two Hundred Thirteenth Creek
Two Hundred Fourteenth Creek
Two Hundred Fifteenth Creek
Two Hundred Sixteenth Creek
Two Hundred Seventeenth Creek
Two Hundred Eighteenth Creek
Two Hundred Nineteenth Creek
Two Hundred Twentieth Creek
Two Hundred Twenty-First Creek
Two Hundred Twenty-Second Creek
Two Hundred Twenty-Third Creek
Two Hundred Twenty-Fourth Creek
Two Hundred Twenty-Fifth Creek
Two Hundred Twenty-Sixth Creek
Two Hundred Twenty-Seventh Creek
Two Hundred Twenty-Eighth Creek
Two Hundred Twenty-Ninth Creek
Two Hundred Thirtieth Creek
Two Hundred Thirty-First Creek
Two Hundred Thirty-Second Creek
Two Hundred Thirty-Third Creek
Two Hundred Thirty-Fourth Creek
Two Hundred Thirty-Fifth Creek
Two Hundred Thirty-Sixth Creek
Two Hundred Thirty-Seventh Creek
Two Hundred Thirty-Eighth Creek
Two Hundred Thirty-Ninth Creek
Two Hundred Fortieth Creek
Two Hundred Forty-First Creek
Two Hundred Forty-Second Creek
Two Hundred Forty-Third Creek
Two Hundred Forty-Fourth Creek
Two Hundred Forty-Fifth Creek
Two Hundred Forty-Sixth Creek
Two Hundred Forty-Seventh Creek
Two Hundred Forty-Eighth Creek
Two Hundred Forty-Ninth Creek
Two Hundred Fiftieth Creek
Two Hundred Fifty-First Creek
Two Hundred Fifty-Second Creek
Two Hundred Fifty-Third Creek
Two Hundred Fifty-Fourth Creek
Two Hundred Fifty-Fifth Creek
Two Hundred Fifty-Sixth Creek
Two Hundred Fifty-Seventh Creek
Two Hundred Fifty-Eighth Creek
Two Hundred Fifty-Ninth Creek
Two Hundred Sixtieth Creek
Two Hundred Sixty-First Creek
Two Hundred Sixty-Second Creek
Two Hundred Sixty-Third Creek
Two Hundred Sixty-Fourth Creek
Two Hundred Sixty-Fifth Creek
Two Hundred Sixty-Sixth Creek
Two Hundred Sixty-Seventh Creek
Two Hundred Sixty-Eighth Creek
Two Hundred Sixty-Ninth Creek
Two Hundred Seventieth Creek
Two Hundred Seventy-First Creek
Two Hundred Seventy-Second Creek
Two Hundred Seventy-Third Creek
Two Hundred Seventy-Fourth Creek
Two Hundred Seventy-Fifth Creek
Two Hundred Seventy-Sixth Creek
Two Hundred Seventy-Seventh Creek
Two Hundred Seventy-Eighth Creek
Two Hundred Seventy-Ninth Creek
Two Hundred Eightieth Creek
Two Hundred Eighty-First Creek
Two Hundred Eighty-Second Creek
Two Hundred Eighty-Third Creek
Two Hundred Eighty-Fourth Creek
Two Hundred Eighty-Fifth Creek
Two Hundred Eighty-Sixth Creek
Two Hundred Eighty-Seventh Creek
Two Hundred Eighty-Eighth Creek
Two Hundred Eighty-Ninth Creek
Two Hundred Ninetieth Creek
Two Hundred Ninety-First Creek
Two Hundred Ninety-Second Creek
Two Hundred Ninety-Third Creek
Two Hundred Ninety-Fourth Creek
Two Hundred Ninety-Fifth Creek
Two Hundred Ninety-Sixth Creek
Two Hundred Ninety-Seventh Creek
Two Hundred Ninety-Eighth Creek
Two Hundred Ninety-Ninth Creek
Three Hundredth Creek
Three Hundred First Creek
Three Hundred Second Creek
Three Hundred Third Creek
Three Hundred Fourth Creek
Three Hundred Fifth Creek
Three Hundred Sixth Creek
Three Hundred Seventh Creek
Three Hundred Eighth Creek
Three Hundred Ninth Creek
Three Hundred Tenth Creek
Three Hundred Eleventh Creek
Three Hundred Twelfth Creek
Three Hundred Thirteenth Creek
Three Hundred Fourteenth Creek
Three Hundred Fifteenth Creek
Three Hundred Sixteenth Creek
Three Hundred Seventeenth Creek
Three Hundred Eighteenth Creek
Three Hundred Nineteenth Creek
Three Hundred Twentieth Creek
Three Hundred Twenty-First Creek
Three Hundred Twenty-Second Creek
Three Hundred Twenty-Third Creek
Three Hundred Twenty-Fourth Creek
Three Hundred Twenty-Fifth Creek
Three Hundred Twenty-Sixth Creek
Three Hundred Twenty-Seventh Creek
Three Hundred Twenty-Eighth Creek
Three Hundred Twenty-Ninth Creek
Three Hundred Thirtieth Creek
Three Hundred Thirty-First Creek
Three Hundred Thirty-Second Creek
Three Hundred Thirty-Third Creek
Three Hundred Thirty-Fourth Creek
Three Hundred Thirty-Fifth Creek
Three Hundred Thirty-Sixth Creek
Three Hundred Thirty-Seventh Creek
Three Hundred Thirty-Eighth Creek
Three Hundred Thirty-Ninth Creek
Three Hundred Fortieth Creek
Three Hundred Forty-First Creek
Three Hundred Forty-Second Creek
Three Hundred Forty-Third Creek
Three Hundred Forty-Fourth Creek
Three Hundred Forty-Fifth Creek
Three Hundred Forty-Sixth Creek
Three Hundred Forty-Seventh Creek
Three Hundred Forty-Eighth Creek
Three Hundred Forty-Ninth Creek
Three Hundred Fiftieth Creek
Three Hundred Fifty-First Creek
Three Hundred Fifty-Second Creek
Three Hundred Fifty-Third Creek
Three Hundred Fifty-Fourth Creek
Three Hundred Fifty-Fifth Creek
Three Hundred Fifty-Sixth Creek
Three Hundred Fifty-Seventh Creek
Three Hundred Fifty-Eighth Creek
Three Hundred Fifty-Ninth Creek
Three Hundred Sixtieth Creek
Three Hundred Sixty-First Creek
Three Hundred Sixty-Second Creek
Three Hundred Sixty-Third Creek
Three Hundred Sixty-Fourth Creek
Three Hundred Sixty-Fifth Creek
Three Hundred Sixty-Sixth Creek
Three Hundred Sixty-Seventh Creek
Three Hundred Sixty-Eighth Creek
Three Hundred Sixty-Ninth Creek
Three Hundred Seventieth Creek
Three Hundred Seventy-First Creek
Three Hundred Seventy-Second Creek
Three Hundred Seventy-Third Creek
Three Hundred Seventy-Fourth Creek
Three Hundred Seventy-Fifth Creek
Three Hundred Seventy-Sixth Creek
Three Hundred Seventy-Seventh Creek
Three Hundred Seventy-Eighth Creek
Three Hundred Seventy-Ninth Creek
Three Hundred Eightieth Creek
Three Hundred Eighty-First Creek
Three Hundred Eighty-Second Creek
Three Hundred Eighty-Third Creek
Three Hundred Eighty-Fourth Creek
Three Hundred Eighty-Fifth Creek
Three Hundred Eighty-Sixth Creek
Three Hundred Eighty-Seventh Creek
Three Hundred Eighty-Eighth Creek
Three Hundred Eighty-Ninth Creek
Three Hundred Ninetieth Creek
Three Hundred Ninety-First Creek
Three Hundred Ninety-Second Creek
Three Hundred Ninety-Third Creek
Three Hundred Ninety-Fourth Creek
Three Hundred Ninety-Fifth Creek
Three Hundred Ninety-Sixth Creek
Three Hundred Ninety-Seventh Creek
Three Hundred Ninety-Eighth Creek
Three Hundred Ninety-Ninth Creek
Four Hundredth Creek
Four Hundred First Creek
Four Hundred Second Creek
Four Hundred Third Creek
Four Hundred Fourth Creek
Four Hundred Fifth Creek
Four Hundred Sixth Creek
Four Hundred Seventh Creek
Four Hundred Eighth Creek
Four Hundred Ninth Creek
Four Hundred Tenth Creek
Four Hundred Eleventh Creek
Four Hundred Twelfth Creek
Four Hundred Thirteenth Creek
Four Hundred Fourteenth Creek
Four Hundred Fifteenth Creek
Four Hundred Sixteenth Creek
Four Hundred Seventeenth Creek
Four Hundred Eighteenth Creek
Four Hundred Nineteenth Creek
Four Hundred Twentieth Creek
Four Hundred Twenty-First Creek
Four Hundred Twenty-Second Creek
Four Hundred Twenty-Third Creek
Four Hundred Twenty-Fourth Creek
Four Hundred Twenty-Fifth Creek
Four Hundred Twenty-Sixth Creek
Four Hundred Twenty-Seventh Creek
Four Hundred Twenty-Eighth Creek
Four Hundred Twenty-Ninth Creek
Four Hundred Thirtieth Creek
Four Hundred Thirty-First Creek
Four Hundred Thirty-Second Creek
Four Hundred Thirty-Third Creek
Four Hundred Thirty-Fourth Creek
Four Hundred Thirty-Fifth Creek
Four Hundred Thirty-Sixth Creek
Four Hundred Thirty-Seventh Creek
Four Hundred Thirty-Eighth Creek
Four Hundred Thirty-Ninth Creek
Four Hundred Fortieth Creek
Four Hundred Forty-First Creek
Four Hundred Forty-Second Creek
Four Hundred Forty-Third Creek
Four Hundred Forty-Fourth Creek
Four Hundred Forty-Fifth Creek
Four Hundred Forty-Sixth Creek
Four Hundred Forty-Seventh Creek
Four Hundred Forty-Eighth Creek
Four Hundred Forty-Ninth Creek
Four Hundred Fiftieth Creek
Four Hundred Fifty-First Creek
Four Hundred Fifty-Second Creek
Four Hundred Fifty-Third Creek
Four Hundred Fifty-Fourth Creek
Four Hundred Fifty-Fifth Creek
Four Hundred Fifty-Sixth Creek
Four Hundred Fifty-Seventh Creek
Four Hundred Fifty-Eighth Creek
Four Hundred Fifty-Ninth Creek
Four Hundred Sixtieth Creek
Four Hundred Sixty-First Creek
Four Hundred Sixty-Second Creek
Four Hundred Sixty-Third Creek
Four Hundred Sixty-Fourth Creek
Four Hundred Sixty-Fifth Creek
Four Hundred Sixty-Sixth Creek
Four Hundred Sixty-Seventh Creek
Four Hundred Sixty-Eighth Creek
Four Hundred Sixty-Ninth Creek
Four Hundred Seventieth Creek
Four Hundred Seventy-First Creek
Four Hundred Seventy-Second Creek
Four Hundred Seventy-Third Creek
Four Hundred Seventy-Fourth Creek
Four Hundred Seventy-Fifth Creek
Four Hundred Seventy-Sixth Creek
Four Hundred Seventy-Seventh Creek
Four Hundred Seventy-Eighth Creek
Four Hundred Seventy-Ninth Creek
Four Hundred Eightieth Creek
Four Hundred Eighty-First Creek
Four Hundred Eighty-Second Creek
Four Hundred Eighty-Third Creek
Four Hundred Eighty-Fourth Creek
Four Hundred Eighty-Fifth Creek
Four Hundred Eighty-Sixth Creek
Four Hundred Eighty-Seventh Creek
Four Hundred Eighty-Eighth Creek
Four Hundred Eighty-Ninth Creek
Four Hundred Ninetieth Creek
Four Hundred Ninety-First Creek
Four Hundred Ninety-Second Creek
Four Hundred Ninety-Third Creek
Four Hundred Ninety-Fourth Creek
Four Hundred Ninety-Fifth Creek
Four Hundred Ninety-Sixth Creek
Four Hundred Ninety-Seventh Creek
Four Hundred Ninety-Eighth Creek
Four Hundred Ninety-Ninth Creek
Five Hundredth Creek
Five Hundred First Creek
Five Hundred Second Creek
Five Hundred Third Creek
Five Hundred Fourth Creek
Five Hundred Fifth Creek
Five Hundred Sixth Creek
Five Hundred Seventh Creek
Five Hundred Eighth Creek
Five Hundred Ninth Creek
Five Hundred Tenth Creek
Five Hundred Eleventh Creek
Five Hundred Twelfth Creek
Five Hundred Thirteenth Creek
Five Hundred Fourteenth Creek
Five Hundred Fifteenth Creek
Five Hundred Sixteenth Creek
Five Hundred Seventeenth Creek
Five Hundred Eighteenth Creek
Five Hundred Nineteenth Creek
Five Hundred Twentieth Creek
Five Hundred Twenty-First Creek
Five Hundred Twenty-Second Creek
Five Hundred Twenty-Third Creek
Five Hundred Twenty-Fourth Creek
Five Hundred Twenty-Fifth Creek
Five Hundred Twenty-Sixth Creek
Five Hundred Twenty-Seventh Creek
Five Hundred Twenty-Eighth Creek
Five Hundred Twenty-Ninth Creek
Five Hundred Thirtieth Creek
Five Hundred Thirty-First Creek
Five Hundred Thirty-Second Creek
Five Hundred Thirty-Third Creek
Five Hundred Thirty-Fourth Creek
Five Hundred Thirty-Fifth Creek
Five Hundred Thirty-Sixth Creek
Five Hundred Thirty-Seventh Creek
Five Hundred Thirty-Eighth Creek
Five Hundred Thirty-Ninth Creek
Five Hundred Fortieth Creek
Five Hundred Forty-First Creek
Five Hundred Forty-Second Creek
Five Hundred Forty-Third Creek
Five Hundred Forty-Fourth Creek
Five Hundred Forty-Fifth Creek
Five Hundred Forty-Sixth Creek
Five Hundred Forty-Seventh Creek
Five Hundred Forty-Eighth Creek
Five Hundred Forty-Ninth Creek
Five Hundred Fiftieth Creek
Five Hundred Fifty-First Creek
Five Hundred Fifty-Second Creek
Five Hundred Fifty-Third Creek
Five Hundred Fifty-Fourth Creek
Five Hundred Fifty-Fifth Creek
Five Hundred Fifty-Sixth Creek
Five Hundred Fifty-Seventh Creek
Five Hundred Fifty-Eighth Creek
Five Hundred Fifty-Ninth Creek
Five Hundred Sixtieth Creek
Five Hundred Sixty-First Creek
Five Hundred Sixty-Second Creek
Five Hundred Sixty-Third Creek
Five Hundred Sixty-Fourth Creek
Five Hundred Sixty-Fifth Creek
Five Hundred Sixty-Sixth Creek
Five Hundred Sixty-Seventh Creek
Five Hundred Sixty-Eighth Creek
Five Hundred Sixty-Ninth Creek
Five Hundred Seventieth Creek
Five Hundred Seventy-First Creek
Five Hundred Seventy-Second Creek
Five Hundred Seventy-Third Creek
Five Hundred Seventy-Fourth Creek
Five Hundred Seventy-Fifth Creek
Five Hundred Seventy-Sixth Creek
Five Hundred Seventy-Seventh Creek
Five Hundred Seventy-Eighth Creek
Five Hundred Seventy-Ninth Creek
Five Hundred Eightieth Creek
Five Hundred Eighty-First Creek
Five Hundred Eighty-Second Creek
Five Hundred Eighty-Third Creek
Five Hundred Eighty-Fourth Creek
Five Hundred Eighty-Fifth Creek
Five Hundred Eighty-Sixth Creek
Five Hundred Eighty-Seventh Creek
Five Hundred Eighty-Eighth Creek
Five Hundred Eighty-Ninth Creek
Five Hundred Ninetieth Creek
Five Hundred Ninety-First Creek
Five Hundred Ninety-Second Creek
Five Hundred Ninety-Third Creek
Five Hundred Ninety-Fourth Creek
Five Hundred Ninety-Fifth Creek
Five Hundred Ninety-Sixth Creek
Five Hundred Ninety-Seventh Creek
Five Hundred Ninety-Eighth Creek
Five Hundred Ninety-Ninth Creek
Six Hundredth Creek
Six Hundred First Creek
Six Hundred Second Creek
Six Hundred Third Creek
Six Hundred Fourth Creek
Six Hundred Fifth Creek
Six Hundred Sixth Creek
Six Hundred Seventh Creek
Six Hundred Eighth Creek
Six Hundred Ninth Creek
Six Hundred Tenth Creek
Six Hundred Eleventh Creek
Six Hundred Twelfth Creek
Six Hundred Thirteenth Creek
Six Hundred Fourteenth Creek
Six Hundred Fifteenth Creek
Six Hundred Sixteenth Creek
Six Hundred Seventeenth Creek
Six Hundred Eighteenth Creek
Six Hundred Nineteenth Creek
Six Hundred Twentieth Creek
Six Hundred Twenty-First Creek
Six Hundred Twenty-Second Creek
Six Hundred Twenty-Third Creek
Six Hundred Twenty-Fourth Creek
Six Hundred Twenty-Fifth Creek
Six Hundred Twenty-Sixth Creek
Six Hundred Twenty-Seventh Creek
Six Hundred Twenty-Eighth Creek
Six Hundred Twenty-Ninth Creek
Six Hundred Thirtieth Creek
Six Hundred Thirty-First Creek
Six Hundred Thirty-Second Creek
Six Hundred Thirty-Third Creek
Six Hundred Thirty-Fourth Creek
Six Hundred Thirty-Fifth Creek
Six Hundred Thirty-Sixth Creek
Six Hundred Thirty-Seventh Creek
Six Hundred Thirty-Eighth Creek
Six Hundred Thirty-Ninth Creek
Six Hundred Fortieth Creek
Six Hundred Forty-First Creek
Six Hundred Forty-Second Creek
Six Hundred Forty-Third Creek
Six Hundred Forty-Fourth Creek
Six Hundred Forty-Fifth Creek
Six Hundred Forty-Sixth Creek
Six Hundred Forty-Seventh Creek
Six Hundred Forty-Eighth Creek
Six Hundred Forty-Ninth Creek
Six Hundred Fiftieth Creek
Six Hundred Fifty-First Creek
Six Hundred Fifty-Second Creek
Six Hundred Fifty-Third Creek
Six Hundred Fifty-Fourth Creek
Six Hundred Fifty-Fifth Creek
Six Hundred Fifty-Sixth Creek
Six Hundred Fifty-Seventh Creek
Six Hundred Fifty-Eighth Creek
Six Hundred Fifty-Ninth Creek
Six Hundred Sixtieth Creek
Six Hundred Sixty-First Creek
Six Hundred Sixty-Second Creek
Six Hundred Sixty-Third Creek
Six Hundred Sixty-Fourth Creek
Six Hundred Sixty-Fifth Creek
Six Hundred Sixty-Sixth Creek
Six Hundred Sixty-Seventh Creek
Six Hundred Sixty-Eighth Creek
Six Hundred Sixty-Ninth Creek
Six Hundred Seventieth Creek
Six Hundred Seventy-First Creek
Six Hundred Seventy-Second Creek
Six Hundred Seventy-Third Creek
Six Hundred Seventy-Fourth Creek
Six Hundred Seventy-Fifth Creek
Six Hundred Seventy-Sixth Creek
Six Hundred Seventy-Seventh Creek
Six Hundred Seventy-Eighth Creek
Six Hundred Seventy-Ninth Creek
Six Hundred Eightieth Creek
Six Hundred Eighty-First Creek
Six Hundred Eighty-Second Creek
Six Hundred Eighty-Third Creek
Six Hundred Eighty-Fourth Creek
Six Hundred Eighty-Fifth Creek
Six Hundred Eighty-Sixth Creek
Six Hundred Eighty-Seventh Creek
Six Hundred Eighty-Eighth Creek
Six Hundred Eighty-Ninth Creek
Six Hundred Ninetieth Creek
Six Hundred Ninety-First Creek
Six Hundred Ninety-Second Creek
Six Hundred Ninety-Third Creek
Six Hundred Ninety-Fourth Creek
Six Hundred Ninety-Fifth Creek
Six Hundred Ninety-Sixth Creek
Six Hundred Ninety-Seventh Creek
Six Hundred Ninety-Eighth Creek
Six Hundred Ninety-Ninth Creek
Seven Hundredth Creek
Seven Hundred First Creek
Seven Hundred Second Creek
Seven Hundred Third Creek
Seven Hundred Fourth Creek
Seven Hundred Fifth Creek
Seven Hundred Sixth Creek
Seven Hundred Seventh Creek
Seven Hundred Eighth Creek
Seven Hundred Ninth Creek
Seven Hundred Tenth Creek
Seven Hundred Eleventh Creek
Seven Hundred Twelfth Creek
Seven Hundred Thirteenth Creek
Seven Hundred Fourteenth Creek
Seven Hundred Fifteenth Creek
Seven Hundred Sixteenth Creek
Seven Hundred Seventeenth Creek
Seven Hundred Eighteenth Creek
Seven Hundred Nineteenth Creek
Seven Hundred Twentieth Creek
Seven Hundred Twenty-First Creek
Seven Hundred Twenty-Second Creek
Seven Hundred Twenty-Third Creek
Seven Hundred Twenty-Fourth Creek
Seven Hundred Twenty-Fifth Creek
Seven Hundred Twenty-Sixth Creek
Seven Hundred Twenty-Seventh Creek
Seven Hundred Twenty-Eighth Creek
Seven Hundred Twenty-Ninth Creek
Seven Hundred Thirtieth Creek
Seven Hundred Thirty-First Creek
Seven Hundred Thirty-Second Creek
Seven Hundred Thirty-Third Creek
Seven Hundred Thirty-Fourth Creek
Seven Hundred Thirty-Fifth Creek
Seven Hundred Thirty-Sixth Creek
Seven Hundred Thirty-Seventh Creek
Seven Hundred Thirty-Eighth Creek
Seven Hundred Thirty-Ninth Creek
Seven Hundred Fortieth Creek
Seven Hundred Forty-First Creek
Seven Hundred Forty-Second Creek
Seven Hundred Forty-Third Creek
Seven Hundred Forty-Fourth Creek
Seven Hundred Forty-Fifth Creek
Seven Hundred Forty-Sixth Creek
Seven Hundred Forty-Seventh Creek
Seven Hundred Forty-Eighth Creek
Seven Hundred Forty-Ninth Creek
Seven Hundred Fiftieth Creek
Seven Hundred Fifty-First Creek
Seven Hundred Fifty-Second Creek
Seven Hundred Fifty-Third Creek
Seven Hundred Fifty-Fourth Creek
Seven Hundred Fifty-Fifth Creek
Seven Hundred Fifty-Sixth Creek
Seven Hundred Fifty-Seventh Creek
Seven Hundred Fifty-Eighth Creek
Seven Hundred Fifty-Ninth Creek
Seven Hundred Sixtieth Creek
Seven Hundred Sixty-First Creek
Seven Hundred Sixty-Second Creek
Seven Hundred Sixty-Third Creek
Seven Hundred Sixty-Fourth Creek
Seven Hundred Sixty-Fifth Creek
Seven Hundred Sixty-Sixth Creek
Seven Hundred Sixty-Seventh Creek
Seven Hundred Sixty-Eighth Creek
Seven Hundred Sixty-Ninth Creek
Seven Hundred Seventieth Creek
Seven Hundred Seventy-First Creek
Seven Hundred Seventy-Second Creek
Seven Hundred Seventy-Third Creek
Seven Hundred Seventy-Fourth Creek
Seven Hundred Seventy-Fifth Creek
Seven Hundred Seventy-Sixth Creek
Seven Hundred Seventy-Seventh Creek
Seven Hundred Seventy-Eighth Creek
Seven Hundred Seventy-Ninth Creek
Seven Hundred Eightieth Creek
Seven Hundred Eighty-First Creek
Seven Hundred Eighty-Second Creek
Seven Hundred Eighty-Third Creek
Seven Hundred Eighty-Fourth Creek
Seven Hundred Eighty-Fifth Creek
Seven Hundred Eighty-Sixth Creek
Seven Hundred Eighty-Seventh Creek
Seven Hundred Eighty-Eighth Creek
Seven Hundred Eighty-Ninth Creek
Seven Hundred Ninetieth Creek
Seven Hundred Ninety-First Creek
Seven Hundred Ninety-Second Creek
Seven Hundred Ninety-Third Creek
Seven Hundred Ninety-Fourth Creek
Seven Hundred Ninety-Fifth Creek
Seven Hundred Ninety-Sixth Creek
Seven Hundred Ninety-Seventh Creek
Seven Hundred Ninety-Eighth Creek
Seven Hundred Ninety-Ninth Creek
Eight Hundredth Creek
Eight Hundred First Creek
Eight Hundred Second Creek
Eight Hundred Third Creek
Eight Hundred Fourth Creek
Eight Hundred Fifth Creek
Eight Hundred Sixth Creek
Eight Hundred Seventh Creek
Eight Hundred Eighth Creek
Eight Hundred Ninth Creek
Eight Hundred Tenth Creek
Eight Hundred Eleventh Creek
Eight Hundred Twelfth Creek
Eight Hundred Thirteenth Creek
Eight Hundred Fourteenth Creek
Eight Hundred Fifteenth Creek
Eight Hundred Sixteenth Creek
Eight Hundred Seventeenth Creek
Eight Hundred Eighteenth Creek
Eight Hundred Nineteenth Creek
Eight Hundred Twentieth Creek
Eight Hundred Twenty-First Creek
Eight Hundred Twenty-Second Creek
Eight Hundred Twenty-Third Creek
Eight Hundred Twenty-Fourth Creek
Eight Hundred Twenty-Fifth Creek
Eight Hundred Twenty-Sixth Creek
Eight Hundred Twenty-Seventh Creek
Eight Hundred Twenty-Eighth Creek
Eight Hundred Twenty-Ninth Creek
Eight Hundred Thirtieth Creek
Eight Hundred Thirty-First Creek
Eight Hundred Thirty-Second Creek
Eight Hundred Thirty-Third Creek
Eight Hundred Thirty-Fourth Creek
Eight Hundred Thirty-Fifth Creek
Eight Hundred Thirty-Sixth Creek
Eight Hundred Thirty-Seventh Creek
Eight Hundred Thirty-Eighth Creek
Eight Hundred Thirty-Ninth Creek
Eight Hundred Fortieth Creek
Eight Hundred Forty-First Creek
Eight Hundred Forty-Second Creek
Eight Hundred Forty-Third Creek
Eight Hundred Forty-Fourth Creek
Eight Hundred Forty-Fifth Creek
Eight Hundred Forty-Sixth Creek
Eight Hundred Forty-Seventh Creek
Eight Hundred Forty-Eighth Creek
Eight Hundred Forty-Ninth Creek
Eight Hundred Fiftieth Creek
Eight Hundred Fifty-First Creek
Eight Hundred Fifty-Second Creek
Eight Hundred Fifty-Third Creek
Eight Hundred Fifty-Fourth Creek
Eight Hundred Fifty-Fifth Creek
Eight Hundred Fifty-Sixth Creek
Eight Hundred Fifty-Seventh Creek
Eight Hundred Fifty-Eighth Creek
Eight Hundred Fifty-Ninth Creek
Eight Hundred Sixtieth Creek
Eight Hundred Sixty-First Creek
Eight Hundred Sixty-Second Creek
Eight Hundred Sixty-Third Creek
Eight Hundred Sixty-Fourth Creek
Eight Hundred Sixty-Fifth Creek
Eight Hundred Sixty-Sixth Creek
Eight Hundred Sixty-Seventh Creek
Eight Hundred Sixty-Eighth Creek
Eight Hundred Sixty-Ninth Creek
Eight Hundred Seventieth Creek
Eight Hundred Seventy-First Creek
Eight Hundred Seventy-Second Creek
Eight Hundred Seventy-Third Creek
Eight Hundred Seventy-Fourth Creek
Eight Hundred Seventy-Fifth Creek
Eight Hundred Seventy-Sixth Creek
Eight Hundred Seventy-Seventh Creek
Eight Hundred Seventy-Eighth Creek
Eight Hundred Seventy-Ninth Creek
Eight Hundred Eightieth Creek
Eight Hundred Eighty-First Creek
Eight Hundred Eighty-Second Creek
Eight Hundred Eighty-Third Creek
Eight Hundred Eighty-Fourth Creek
Eight Hundred Eighty-Fifth Creek
Eight Hundred Eighty-Sixth Creek
Eight Hundred Eighty-Seventh Creek
Eight Hundred Eighty-Eighth Creek
Eight Hundred Eighty-Ninth Creek
Eight Hundred Ninetieth Creek
Eight Hundred Ninety-First Creek
Eight Hundred Ninety-Second Creek
Eight Hundred Ninety-Third Creek
Eight Hundred Ninety-Fourth Creek
Eight Hundred Ninety-Fifth Creek
Eight Hundred Ninety-Sixth Creek
Eight Hundred Ninety-Seventh Creek
Eight Hundred Ninety-Eighth Creek
Eight Hundred Ninety-Ninth Creek
Nine Hundredth Creek
Nine Hundred First Creek
Nine Hundred Second Creek
Nine Hundred Third Creek
Nine Hundred Fourth Creek
Nine Hundred Fifth Creek
Nine Hundred Sixth Creek
Nine Hundred Seventh Creek
Nine Hundred Eighth Creek
Nine Hundred Ninth Creek
Nine Hundred Tenth Creek
Nine Hundred Eleventh Creek
Nine Hundred Twelfth Creek
Nine Hundred Thirteenth Creek
Nine Hundred Fourteenth Creek
Nine Hundred Fifteenth Creek
Nine Hundred Sixteenth Creek
Nine Hundred Seventeenth Creek
Nine Hundred Eighteenth Creek
Nine Hundred Nineteenth Creek
Nine Hundred Twentieth Creek
Nine Hundred Twenty-First Creek
Nine Hundred Twenty-Second Creek
Nine Hundred Twenty-Third Creek
Nine Hundred Twenty-Fourth Creek
Nine Hundred Twenty-Fifth Creek
Nine Hundred Twenty-Sixth Creek
Nine Hundred Twenty-Seventh Creek
Nine Hundred Twenty-Eighth Creek
Nine Hundred Twenty-Ninth Creek
Nine Hundred Thirtieth Creek
Nine Hundred Thirty-First Creek
Nine Hundred Thirty-Second Creek
Nine Hundred Thirty-Third Creek
Nine Hundred Thirty-Fourth Creek
Nine Hundred Thirty-Fifth Creek
Nine Hundred Thirty-Sixth Creek
Nine Hundred Thirty-Seventh Creek
Nine Hundred Thirty-Eighth Creek
Nine Hundred Thirty-Ninth Creek
Nine Hundred Fortieth Creek
Nine Hundred Forty-First Creek
Nine Hundred Forty-Second Creek
Nine Hundred Forty-Third Creek
Nine Hundred Forty-Fourth Creek
Nine Hundred Forty-Fifth Creek
Nine Hundred Forty-Sixth Creek
Nine Hundred Forty-Seventh Creek
Nine Hundred Forty-Eighth Creek
Nine Hundred Forty-Ninth Creek
Nine Hundred Fiftieth Creek
Nine Hundred Fifty-First Creek
Nine Hundred Fifty-Second Creek
Nine Hundred Fifty-Third Creek

R-63

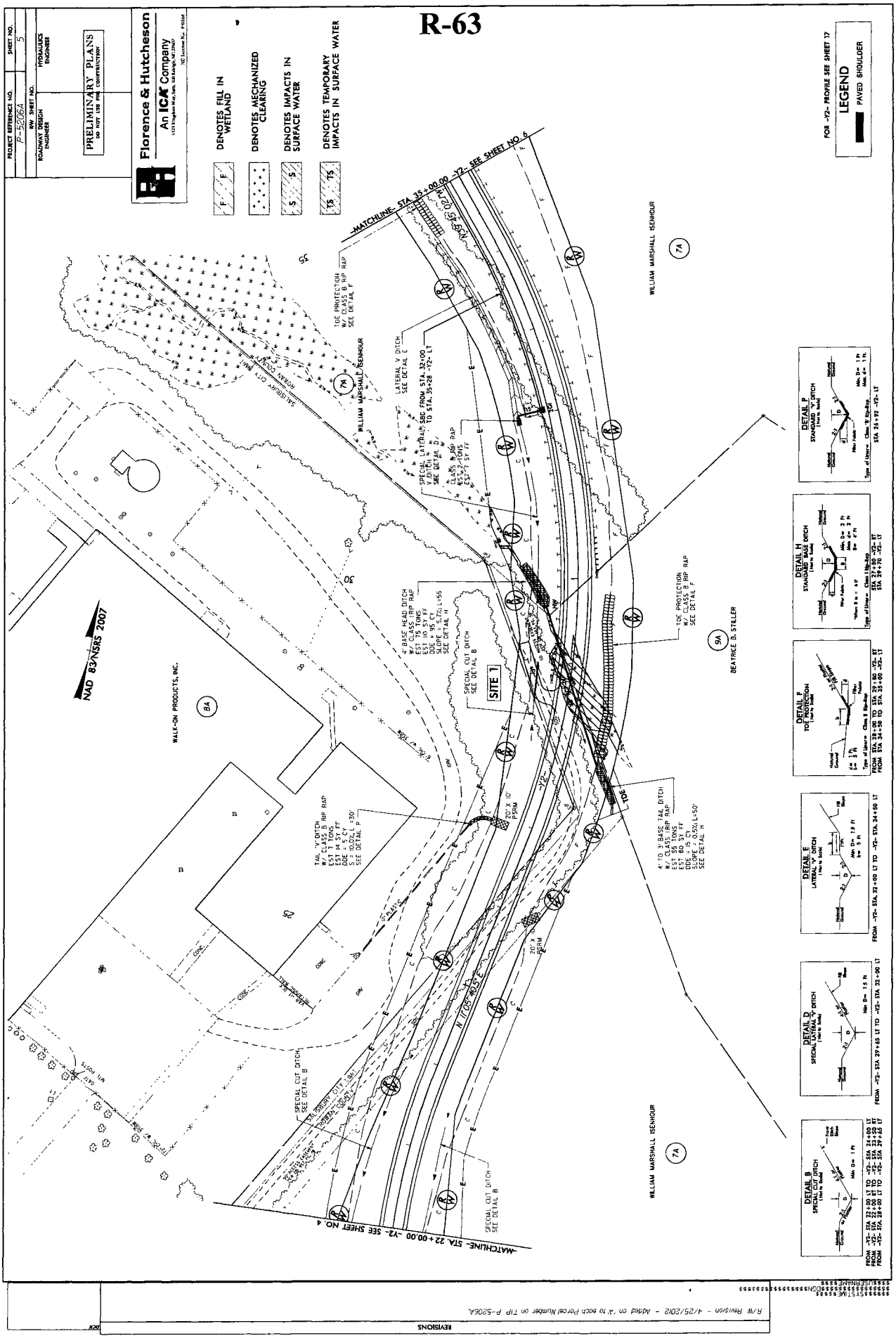
PROJECT REFERENCE NO.
P-5206A
SHEET NO.
5
RW SHEET NO.
ROADWAY DESIGN ENGINEER
HYDRAULICS ENGINEER
PRELIMINARY PLANS
DO NOT USE FOR CONSTRUCTION
Florence & Hutcheson
An ICA Company
DENOTES FILL IN WETLAND
DENOTES MECHANIZED CLEARING
DENOTES IMPACTS IN SURFACE WATER
DENOTES TEMPORARY IMPACTS IN SURFACE WATER
LEGEND
PAVED SHOULDER
FOR -Y2- PROFILE SEE SHEET 17
-MATCHLINE- STA 35+00.00 -Y2- SEE SHEET NO. 6
-MATCHLINE- STA 22+00.00 -Y2- SEE SHEET NO. 4
NAD 83/NSRS 2007
WILLIAM MARSHALL ISENHOUR
WALK-ON PRODUCTS, INC.
BEATRICE D. STILLER
SITE 1
TOE PROTECTION W/ CLASS B RIP RAP SEE DETAIL F
LATERAL V DITCH SEE DETAIL E
SPECIAL CUT DITCH SEE DETAIL B
TAIL V DITCH W/ CLASS B RIP RAP
4' TO 31' BASE TAIL DITCH W/ CLASS B RIP RAP
20' X 10' PSRM
DETAIL P STANDARD "V" DITCH
DETAIL H STANDARD TRAP DITCH
DETAIL F TOE PROTECTION
DETAIL E LATERAL "V" DITCH
DETAIL D SPECIAL LATERAL "V" DITCH
DETAIL B SPECIAL TRAP DITCH
REVISIONS
R/W Revision - 4/25/2012 - Added on "Y" to each Parcel Number on TIP P-5206A

R-64

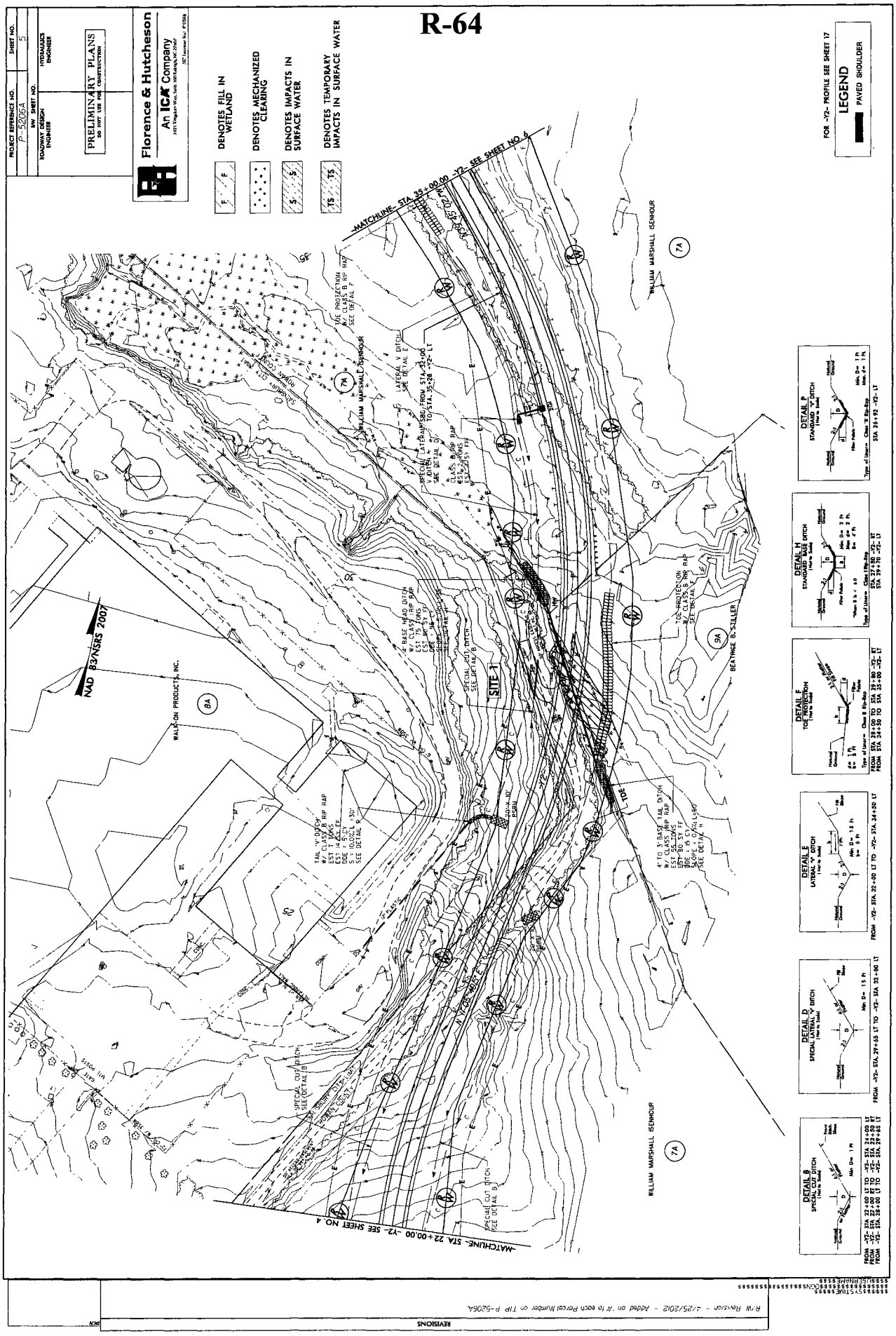
PROJECT REFERENCE NO.
P-5206A
SHEET NO.
5
RW SHEET NO.
ROADWAY DESIGN ENGINEER
HYDRAULICS ENGINEER
PRELIMINARY PLANS
DO NOT USE FOR CONSTRUCTION
Florence & Hutcheson
An ICA Company
DENOTES FILL IN WETLAND
DENOTES MECHANIZED CLEARING
DENOTES IMPACTS IN SURFACE WATER
DENOTES TEMPORARY IMPACTS IN SURFACE WATER
FOR -Y2- PROFILE SEE SHEET 17
LEGEND
PAVED SHOULDER
-MATCHLINE- STA 39+00.00 -Y2- SEE SHEET NO. 6
-MATCHLINE- STA 22+00.00 -Y2- SEE SHEET NO. 4
NAD 83/NSRS 2007
SITE 1
WALT-ON PRODUCTS, INC.
WILLIAM MARSHALL ISENHOUR
BEATRICE D. KILLER
DETAIL B
DETAIL D
DETAIL E
DETAIL F
DETAIL H
DETAIL P
REVISIONS
R/W Revision - 12/25/2012 - Added on 'A' to each Parcel Number on TIP P-5206A

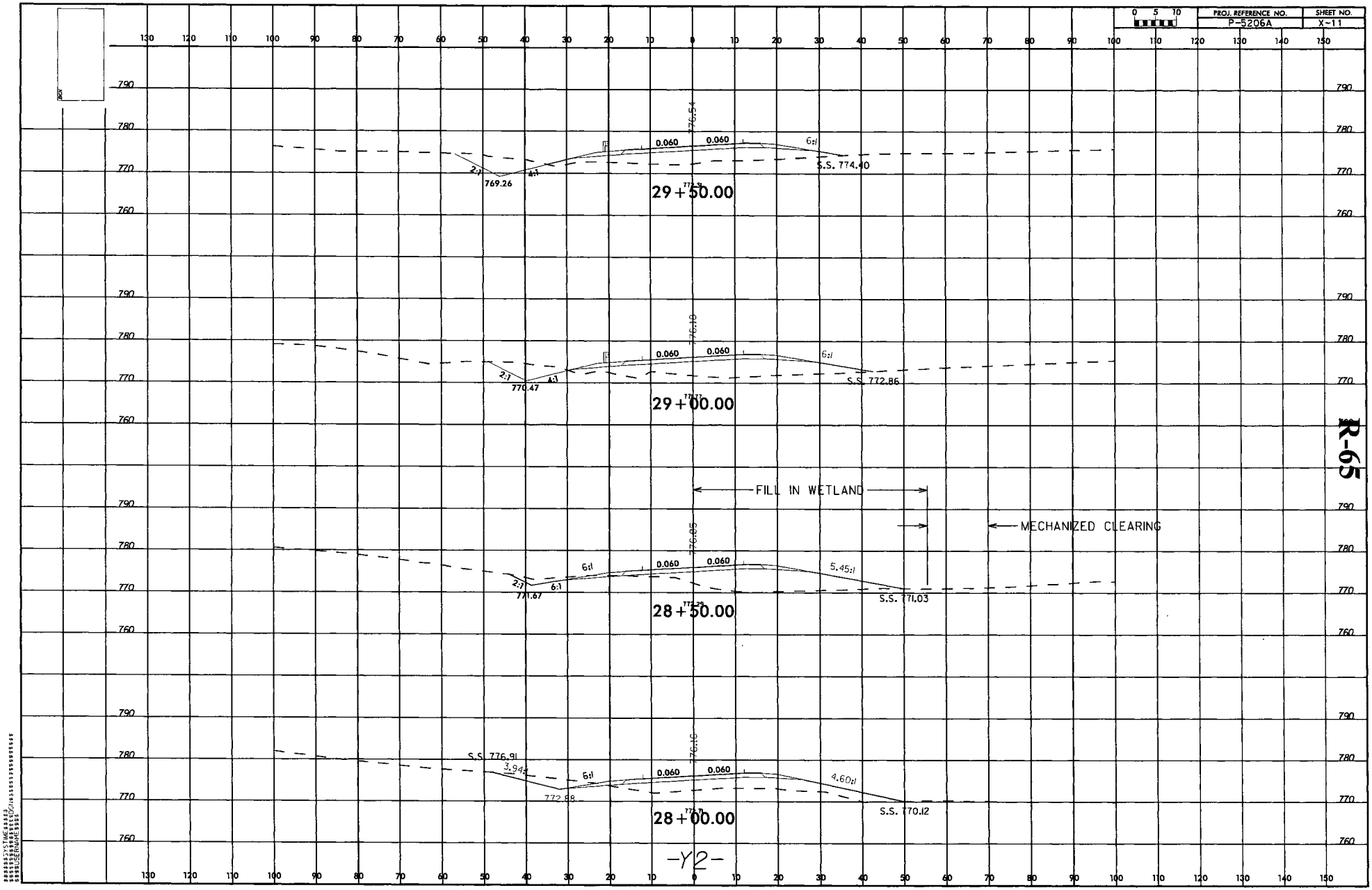

0151DEL_P10b1

STANDARD SPECIAL PROVISION
AVAILABILITY OF FUNDS – TERMINATION OF CONTRACTS

(5-20-08) Z-2

General Statute 143C-6-11. (h) Highway Appropriation is hereby incorporated verbatim in this contract as follows:

(h) Amounts Encumbered. – Transportation project appropriations may be encumbered in the amount of allotments made to the Department of Transportation by the Director for the estimated payments for transportation project contract work to be performed in the appropriation fiscal year. The allotments shall be multiyear allotments and shall be based on estimated revenues and shall be subject to the maximum contract authority contained in *General Statute 143C-6-11(c)*. Payment for transportation project work performed pursuant to contract in any fiscal year other than the current fiscal year is subject to appropriations by the General Assembly. Transportation project contracts shall contain a schedule of estimated completion progress, and any acceleration of this progress shall be subject to the approval of the Department of Transportation provided funds are available. The State reserves the right to terminate or suspend any transportation project contract, and any transportation project contract shall be so terminated or suspended if funds will not be available for payment of the work to be performed during that fiscal year pursuant to the contract. In the event of termination of any contract, the contractor shall be given a written notice of termination at least 60 days before completion of scheduled work for which funds are available. In the event of termination, the contractor shall be paid for the work already performed in accordance with the contract specifications.

Payment will be made on any contract terminated pursuant to the special provision in accordance with Subarticle 108-13(E) of the *2012 Standard Specifications*.

STANDARD SPECIAL PROVISION
NCDOT GENERAL SEED SPECIFICATION FOR SEED QUALITY

(5-17-11) Z-3

Seed shall be sampled and tested by the North Carolina Department of Agriculture and Consumer Services, Seed Testing Laboratory. When said samples are collected, the vendor shall supply an independent laboratory report for each lot to be tested. Results from seed so sampled shall be final. Seed not meeting the specifications shall be rejected by the Department of Transportation and shall not be delivered to North Carolina Department of Transportation warehouses. If seed has been delivered it shall be available for pickup and replacement at the supplier's expense.

Any re-labeling required by the North Carolina Department of Agriculture and Consumer Services, Seed Testing Laboratory, that would cause the label to reflect as otherwise specified herein shall be rejected by the North Carolina Department of Transportation.

Seed shall be free from seeds of the noxious weeds Johnsongrass, Balloonvine, Jimsonweed, Witchweed, Itchgrass, Serrated Tussock, Showy Crotalaria, Smooth Crotalaria, Sicklepod, Sandbur, Wild Onion, and Wild Garlic. Seed shall not be labeled with the above weed species on the seed analysis label. Tolerances as applied by the Association of Official Seed Analysts will NOT be allowed for the above noxious weeds except for Wild Onion and Wild Garlic.

Tolerances established by the Association of Official Seed Analysts will generally be recognized. However, for the purpose of figuring pure live seed, the found pure seed and found germination percentages as reported by the North Carolina Department of Agriculture and Consumer Services, Seed Testing Laboratory will be used. Allowances, as established by the NCDOT, will be recognized for minimum pure live seed as listed on the following pages.

The specifications for restricted noxious weed seed refers to the number per pound as follows:

Restricted Noxious **Weed**	Limitations per Lb. Of Seed	Restricted Noxious **Weed**	Limitations per Lb. of Seed
Blessed Thistle	4 seeds	Cornflower (Ragged Robin)	27 seeds
Cocklebur	4 seeds	Texas Panicum	27 seeds
Spurred Anoda	4 seeds	Bracted Plantain	54 seeds
Velvetleaf	4 seeds	Buckhorn Plantain	54 seeds
Morning-glory	8 seeds	Broadleaf Dock	54 seeds
Corn Cockle	10 seeds	Curly Dock	54 seeds
Wild Radish	12 seeds	Dodder	54 seeds
Purple Nutsedge	27 seeds	Giant Foxtail	54 seeds
Yellow Nutsedge	27 seeds	Horsenettle	54 seeds
Canada Thistle	27 seeds	Quackgrass	54 seeds
Field Bindweed	27 seeds	Wild Mustard	54 seeds
Hedge Bindweed	27 seeds		

Seed of Pensacola Bahiagrass shall not contain more than 7% inert matter, Kentucky Bluegrass, Centipede and Fine or Hard Fescue shall not contain more than 5% inert matter whereas a maximum of 2% inert matter will be allowed on all other kinds of seed. In addition, all seed shall not contain more than 2% other crop seed nor more than 1% total weed seed. The germination rate as tested by the North Carolina Department of Agriculture shall not fall below 70%, which includes both dormant and hard seed. Seed shall be labeled with not more than 7%, 5% or 2% inert matter (according to above specifications), 2% other crop seed and 1% total weed seed.

Exceptions may be made for minimum pure live seed allowances when cases of seed variety shortages are verified. Pure live seed percentages will be applied in a verified shortage situation. Those purchase orders of deficient seed lots will be credited with the percentage that the seed is deficient.

FURTHER SPECIFICATIONS FOR EACH SEED GROUP ARE GIVEN BELOW:

Minimum 85% pure live seed; maximum 1% total weed seed; maximum 2% total other crop seed; maximum 144 restricted noxious weed seed per pound. Seed less than 83% pure live seed will not be approved.

Sericea Lespedeza
Oats (seeds)

Minimum 80% pure live seed; maximum 1% total weed seed; maximum 2% total other crop; maximum 144 restricted noxious weed seed per pound. Seed less than 78% pure live seed will not be approved.

Tall Fescue (all approved varieties)
Kobe Lespedeza
Korean Lespedeza
Weeping Lovegrass
Carpetgrass
Bermudagrass
Browntop Millet
German Millet – Strain R
Clover – Red/White/Crimson

Minimum 78% pure live seed; maximum 1% total weed seed; maximum 2% total other crop seed; maximum 144 restricted noxious weed seed per pound. Seed less than 76% pure live seed will not be approved.

Common or Sweet Sundangrass

Minimum 76% pure live seed; maximum 1% total weed seed; maximum 2% total other crop seed; maximum 144 restricted noxious weed seed per pound. Seed less than 74% pure live seed will not be approved.

Rye (grain; all varieties)
Kentucky Bluegrass (all approved varieties)
Hard Fescue (all approved varieties)
Shrub (bicolor) Lespedeza

Minimum 70% pure live seed; maximum 1% total weed seed; maximum 2% total other crop seed; maximum 144 noxious weed seed per pound. Seed less than 70% pure live seed will not be approved.

Centipedegrass
Crownvetch
Pensacola Bahiagrass
Creeping Red Fescue
Japanese Millet
Reed Canary Grass
Zoysia

Minimum 70% pure live seed; maximum 1% total weed seed; maximum 2% total other crop seed; maximum 5% inert matter; maximum 144 restricted noxious weed seed per pound.

Barnyard Grass
Big Bluestem
Little Bluestem
Bristly Locust
Birdsfoot Trefoil
Indiangrass
Orchardgrass
Switchgrass
Yellow Blossom Sweet Clover

STANDARD SPECIAL PROVISION

ERRATA

(1-17-12) (Rev. 9-18-12) Z-4

Revise the *2012 Standard Specifications* as follows:

Division 2

Page 2-7, line 31, Article 215-2 Construction Methods, replace "Article 107-26" with "Article 107-25".

Page 2-17, Article 226-3, Measurement and Payment, line 2, delete "pipe culverts,".

Page 2-20, Subarticle 230-4(B), Contractor Furnished Sources, change references as follows: Line 1, replace "(4) Buffer Zone" with "(c) Buffer Zone"; **Line 12,** replace "(5) Evaluation for Potential Wetlands and Endangered Species" with "(d) Evaluation for Potential Wetlands and Endangered Species"; and **Line 33,** replace "(6) Approval" with "(4) Approval".

Division 4

Page 4-77, line 27, Subarticle 452-3(C) Concrete Coping, replace "sheet pile" with "reinforcement".

Division 6

Page 6-7, line 31, Article 609-3 Field Verification of Mixture and Job Mix Formula Adjustments, replace "30" with "45".

Page 6-10, line 42, Subarticle 609-6(C)(2), replace "Subarticle 609-6(E)" with "Subarticle 609-6(D)".

Page 6-11, Table 609-1 Control Limits, replace "Max. Spec. Limit" for the Target Source of $P_{0.075}/P_{be}$ Ratio with "1.0".

Page 6-40, Article 650-2 Materials, replace "Subarticle 1012-1(F)" with "Subarticle 1012-1(E)"

Division 10

Page 10-74, Table 1056-1 Geotextile Requirements, replace "50%" for the UV Stability (Retained Strength) of Type 5 geotextiles with "70%".

Division 12

Page 12-7, Table 1205-3, add "FOR THERMOPLASTIC" to the end of the title.

Page 12-8, Subarticle 1205-5(B), line 13, replace "Table 1205-2" with "Table 1205-4".

Page 12-8, Table 1205-4 and 1205-5, replace "THERMOPLASTIC" in the title of these tables with "POLYUREA".

Page 12-9, Subarticle 1205-6(B), line 21, replace "Table 1205-4" with "Table 1205-6".

Page 12-11, Subarticle 1205-8(C), line 25, replace "Table 1205-5" with "Table 1205-7".

Division 15

Page 15-6, Subarticle 1510-3(B), after line 21, replace the allowable leakage formula with the following: $W = LD\sqrt{P} \div 148,000$

Page 15-6, Subarticle 1510-3(B), line 32, delete "may be performed concurrently or" and replace with "shall be performed".

Page 15-17, Subarticle 1540-3(E), line 27, delete "Type 1".

Division 17

Page 17-26, line 42, Subarticle 1731-3(D) Termination and Splicing within Interconnect Center, delete this subarticle.

Revise the *2012 Roadway Standard Drawings* as follows:

1633.01 Sheet 1 of 1, English Standard Drawing for Matting Installation, replace "1633.01" with "1631.01".

STANDARD SPECIAL PROVISION

PLANT AND PEST QUARANTINES
(Imported Fire Ant, Gypsy Moth, Witchweed, And Other Noxious Weeds)

(3-18-03) Z-04a

Within Quarantined Area

This project may be within a county regulated for plant and/or pests. If the project or any part of the Contractor's operations is located within a quarantined area, thoroughly clean all equipment prior to moving out of the quarantined area. Comply with federal/state regulations by obtaining a certificate or limited permit for any regulated article moving from the quarantined area.

Originating in a Quarantined County

Obtain a certificate or limited permit issued by the N.C. Department of Agriculture/United States Department of Agriculture. Have the certificate or limited permit accompany the article when it arrives at the project site.

Contact

Contact the N.C. Department of Agriculture/United States Department of Agriculture at 1-800-206-9333, 919-733-6932, or *http://www.ncagr.com/plantind/* to determine those specific project sites located in the quarantined area or for any regulated article used on this project originating in a quarantined county.

Regulated Articles Include

1. Soil, sand, gravel, compost, peat, humus, muck, and decomposed manure, separately or with other articles. This includes movement of articles listed above that may be associated with cut/waste, ditch pulling, and shoulder cutting.
2. Plants with roots including grass sod.
3. Plant crowns and roots.
4. Bulbs, corms, rhizomes, and tubers of ornamental plants.
5. Hay, straw, fodder, and plant litter of any kind.
6. Clearing and grubbing debris.
7. Used agricultural cultivating and harvesting equipment.
8. Used earth-moving equipment.
9. Any other products, articles, or means of conveyance, of any character, if determined by an inspector to present a hazard of spreading imported fire ant, gypsy moth, witchweed or other noxious weeds.

STANDARD SPECIAL PROVISION

AWARD OF CONTRACT

(6-28-77) Z-6

"The North Carolina Department of Transportation, in accordance with the provisions of *Title VI of the Civil Rights Act of 1964* (78 Stat. 252) and the Regulations of the Department of Transportation (*49 C.F.R., Part 21*), issued pursuant to such act, hereby notifies all bidders that it will affirmatively insure that the contract entered into pursuant to this advertisement will be awarded to the lowest responsible bidder without discrimination on the ground of race, color, or national origin".

STANDARD SPECIAL PROVISION

MINORITY AND FEMALE EMPLOYMENT REQUIREMENTS

Z-7

NOTICE OF REQUIREMENTS FOR AFFIRMATIVE ACTION TO ENSURE EQUAL EMPLOYMENT OPPORTUNITY (*EXECUTIVE NUMBER 11246*)

1. The goals and timetables for minority and female participation, expressed in percentage terms for the Contractor's aggregate workforce in each trade on all construction work in the covered area, see as shown on the attached sheet entitled "Employment Goals for Minority and Female participation".

These goals are applicable to all the Contractor's construction work (whether or not it is Federal or federally assisted) performed in the covered area. If the Contractor performs construction work in a geographical area located outside of the covered area, it shall apply the goals established for such geographical area where the work is actually performed. With regard to this second area, the Contractor also is subject to the goals for both its federally involved and nonfederally involved construction.

The Contractor's compliance with the Executive Order and the regulations in *41 CFR Part 60-4* shall be based on its implementation of the Equal Opportunity Clause, specific affirmative action obligations required by the specifications set forth in *41 CFR 60-4.3(a)*, and its effort to meet the goals. The hours of minority and female employment and training must be substantially uniform throughout the length of the contract, and in each trade and the Contractor shall make a good faith effort to employ minorities and women evenly on each of its projects. The transfer of minority or female employees or trainees from Contractor to Contractor or from project to project or the sole purpose of meeting the Contractor's goals shall be a violation of the contract, the executive Order and the regulations *in 41 CFR Part 60-4*. Compliance with the goals will be measured against the total work hours performed.

2. As used in this Notice and in the contract resulting from this solicitation, the "covered area" is the county or counties shown on the cover sheet of the proposal form and contract.

EMPLOYMENT GOALS FOR MINORITY AND FEMALE PARTICIPATION

Economic Areas

Area 023 29.7%
Bertie County
Camden County
Chowan County
Gates County
Hertford County
Pasquotank County
Perquimans County

Area 024 31.7%
Beaufort County
Carteret County
Craven County
Dare County
Edgecombe County
Green County
Halifax County
Hyde County
Jones County
Lenoir County
Martin County
Nash County
Northampton County
Pamlico County
Pitt County
Tyrrell County
Washington County
Wayne County
Wilson County

Area 025 23.5%
Columbus County
Duplin County
Onslow County
Pender County

Area 026 33.5%
Bladen County
Hoke County
Richmond County
Robeson County
Sampson County
Scotland County

Area 027 24.7%
Chatham County
Franklin County
Granville County
Harnett County
Johnston County
Lee County
Person County
Vance County
Warren County

Area 028 15.5%
Alleghany County
Ashe County
Caswell County
Davie County
Montgomery County
Moore County
Rockingham County
Surry County
Watauga County
Wilkes County

Area 029 15.7%
Alexander County
Anson County
Burke County
Cabarrus County
Caldwell County
Catawba County
Cleveland County
Iredell County
Lincoln County
Polk County
Rowan County
Rutherford County
Stanly County

Area 0480 8.5%
Buncombe County
Madison County

Area 030 6.3%
Avery County
Cherokee County
Clay County
Graham County
Haywood County
Henderson County
Jackson County
McDowell County
Macon County
Mitchell County
Swain County
Transylvania County
Yancey County

SMSA Areas

Area 5720 26.6%
Currituck County

Area 9200 20.7%
Brunswick County
New Hanover County

Area 2560 24.2%
Cumberland County

Area 6640 22.8%
Durham County
Orange County
Wake County

Area 1300 16.2%
Alamance County

Area 3120 16.4%
Davidson County
Forsyth County
Guilford County
Randolph County
Stokes County
Yadkin County

Area 1520 18.3%
Gaston County
Mecklenburg County
Union County

Goals for Female

Participation in Each Trade

(Statewide) 6.9%

STANDARD SPECIAL PROVISION

REQUIRED CONTRACT PROVISIONS FEDERAL - AID CONSTRUCTION CONTRACTS

FHWA - 1273 Electronic Version - May 1, 2012 Z-8

I. General
II. Nondiscrimination
III. Nonsegregated Facilities
IV. Davis-Bacon and Related Act Provisions
V. Contract Work Hours and Safety Standards Act Provisions
VI. Subletting or Assigning the Contract
VII. Safety: Accident Prevention
VIII. False Statements Concerning Highway Projects
IX. Implementation of Clean Air Act and Federal Water Pollution Control Act
X. Compliance with Governmentwide Suspension and Debarment Requirements
XI. Certification Regarding Use of Contract Funds for Lobbying

ATTACHMENTS

A. Employment and Materials Preference for Appalachian Development Highway System or Appalachian Local Access Road Contracts (included in Appalachian contracts only)

I. GENERAL

1. Form FHWA-1273 must be physically incorporated in each construction contract funded under Title 23 (excluding emergency contracts solely intended for debris removal). The contractor (or subcontractor) must insert this form in each subcontract and further require its inclusion in all lower tier subcontracts (excluding purchase orders, rental agreements and other agreements for supplies or services).

   The applicable requirements of Form FHWA-1273 are incorporated by reference for work done under any purchase order, rental agreement or agreement for other services. The prime contractor shall be responsible for compliance by any subcontractor, lower-tier subcontractor or service provider.

   Form FHWA-1273 must be included in all Federal-aid design-build contracts, in all subcontracts and in lower tier subcontracts (excluding subcontracts for design services, purchase orders, rental agreements and other agreements for supplies or services). The design-builder shall be responsible for compliance by any subcontractor, lower-tier subcontractor or service provider.

   Contracting agencies may reference Form FHWA-1273 in bid proposal or request for proposal documents, however, the Form FHWA-1273 must be physically incorporated (not referenced) in all contracts, subcontracts and lower-tier subcontracts (excluding purchase orders, rental agreements and other agreements for supplies or services related to a construction contract).
2. Subject to the applicability criteria noted in the following sections, these contract provisions shall apply to all work performed on the contract by the contractor's own organization and with the assistance of workers under the contractor's immediate superintendence and to all work performed on the contract by piecework, station work, or by subcontract.
3. A breach of any of the stipulations contained in these Required Contract Provisions may be sufficient grounds for withholding of progress payments, withholding of final payment, termination of the contract, suspension / debarment or any other action determined to be appropriate by the contracting agency and FHWA.
4. Selection of Labor: During the performance of this contract, the contractor shall not use convict labor for any purpose within the limits of a construction project on a Federal-aid highway unless it is labor performed by convicts who are on parole, supervised release, or probation. The term Federal-aid highway does not include roadways functionally classified as local roads or rural minor collectors.

II. NONDISCRIMINATION

The provisions of this section related to 23 CFR Part 230 are applicable to all Federal-aid construction contracts and to all related construction subcontracts of $10,000 or more. The provisions of 23 CFR Part 230 are not applicable to material supply, engineering, or architectural service contracts.

In addition, the contractor and all subcontractors must comply with the following policies: Executive Order 11246, 41 CFR 60, 29 CFR 1625-1627, Title 23 USC Section 140, the Rehabilitation Act of 1973, as amended (29 USC 794), Title VI of the Civil Rights Act of 1964, as amended, and related regulations including 49 CFR Parts 21, 26 and 27; and 23 CFR Parts 200, 230, and 633.

The contractor and all subcontractors must comply with: the requirements of the Equal Opportunity Clause in 41 CFR 60-1.4(b) and, for all construction contracts exceeding $10,000, the Standard Federal Equal Employment Opportunity Construction Contract Specifications in 41 CFR 60-4.3.

Note: The U.S. Department of Labor has exclusive authority to determine compliance with Executive Order 11246 and the policies of the Secretary of Labor including 41 CFR 60, and 29 CFR 1625-1627. The contracting agency and the FHWA have the authority and the responsibility to ensure compliance with Title 23 USC Section 140, the Rehabilitation Act of 1973, as amended (29 USC 794), and Title VI of the Civil Rights Act of 1964, as amended, and related regulations including 49 CFR Parts 21, 26 and 27; and 23 CFR Parts 200, 230, and 633.

The following provision is adopted from 23 CFR 230, Appendix A, with appropriate revisions to conform to the U.S. Department of Labor (US DOL) and FHWA requirements.

1. **Equal Employment Opportunity:** Equal employment opportunity (EEO) requirements not to discriminate and to take affirmative action to assure equal opportunity as set forth under laws, executive orders, rules, regulations (28 CFR 35, 29 CFR 1630, 29 CFR 1625-1627, 41 CFR 60 and 49 CFR 27) and orders of the Secretary of Labor as modified by the provisions prescribed herein, and imposed pursuant to 23 U.S.C. 140 shall constitute the EEO and specific affirmative action standards for the contractor's project activities under this contract. The provisions of the Americans with Disabilities Act of 1990 (42 U.S.C. 12101 et seq.) set forth under 28 CFR 35 and 29 CFR 1630 are

incorporated by reference in this contract. In the execution of this contract, the contractor agrees to comply with the following minimum specific requirement activities of EEO:

a. The contractor will work with the contracting agency and the Federal Government to ensure that it has made every good faith effort to provide equal opportunity with respect to all of its terms and conditions of employment and in their review of activities under the contract.
b. The contractor will accept as its operating policy the following statement:
"It is the policy of this Company to assure that applicants are employed, and that employees are treated during employment, without regard to their race, religion, sex, color, national origin, age or disability. Such action shall include: employment, upgrading, demotion, or transfer; recruitment or recruitment advertising; layoff or termination; rates of pay or other forms of compensation; and selection for training, including apprenticeship, pre-apprenticeship, and/or on-the-job training."

2. **EEO Officer:** The contractor will designate and make known to the contracting officers an EEO Officer who will have the responsibility for and must be capable of effectively administering and promoting an active EEO program and who must be assigned adequate authority and responsibility to do so.
3. **Dissemination of Policy:** All members of the contractor's staff who are authorized to hire, supervise, promote, and discharge employees, or who recommend such action, or who are substantially involved in such action, will be made fully cognizant of, and will implement, the contractor's EEO policy and contractual responsibilities to provide EEO in each grade and classification of employment. To ensure that the above agreement will be met, the following actions will be taken as a minimum:
   a. Periodic meetings of supervisory and personnel office employees will be conducted before the start of work and then not less often than once every six months, at which time the contractor's EEO policy and its implementation will be reviewed and explained. The meetings will be conducted by the EEO Officer.
   b. All new supervisory or personnel office employees will be given a thorough indoctrination by the EEO Officer, covering all major aspects of the contractor's EEO obligations within thirty days following their reporting for duty with the contractor.
   c. All personnel who are engaged in direct recruitment for the project will be instructed by the EEO Officer in the contractor's procedures for locating and hiring minorities and women.
   d. Notices and posters setting forth the contractor's EEO policy will be placed in areas readily accessible to employees, applicants for employment and potential employees.
   e. The contractor's EEO policy and the procedures to implement such policy will be brought to the attention of employees by means of meetings, employee handbooks, or other appropriate means.
4. **Recruitment:** When advertising for employees, the contractor will include in all advertisements for employees the notation: "An Equal Opportunity Employer." All such advertisements will be placed in publications having a large circulation among minorities and women in the area from which the project work force would normally be derived.
   a. The contractor will, unless precluded by a valid bargaining agreement, conduct systematic and direct recruitment through public and private employee referral sources likely to yield qualified minorities and women. To meet this requirement, the contractor will identify sources of potential minority group employees, and establish with such identified sources procedures whereby minority and women applicants may be referred to the contractor for employment consideration.
   b. In the event the contractor has a valid bargaining agreement providing for exclusive hiring hall referrals, the contractor is expected to observe the provisions of that agreement to the extent that the system meets the contractor's compliance with EEO contract provisions. Where implementation of such an agreement has the effect of discriminating against minorities or women, or obligates the contractor to do the same, such implementation violates Federal nondiscrimination provisions.
   c. The contractor will encourage its present employees to refer minorities and women as applicants for employment. Information and procedures with regard to referring such applicants will be discussed with employees.
5. **Personnel Actions:** Wages, working conditions, and employee benefits shall be established and administered, and personnel actions of every type, including hiring, upgrading, promotion, transfer, demotion, layoff, and termination, shall be taken without regard to race, color, religion, sex, national origin, age or disability. The following procedures shall be followed:
   a. The contractor will conduct periodic inspections of project sites to insure that working conditions and employee facilities do not indicate discriminatory treatment of project site personnel.
   b. The contractor will periodically evaluate the spread of wages paid within each classification to determine any evidence of discriminatory wage practices.
   c. The contractor will periodically review selected personnel actions in depth to determine whether there is evidence of discrimination. Where evidence is found, the contractor will promptly take corrective action. If the review indicates that the discrimination may extend beyond the actions reviewed, such corrective action shall include all affected persons.
   d. The contractor will promptly investigate all complaints of alleged discrimination made to the contractor in connection with its obligations under this contract, will attempt to resolve such complaints, and will take appropriate corrective action within a reasonable time. If the investigation indicates that the discrimination may affect persons other than the complainant, such corrective action shall include such other persons. Upon completion of each investigation, the contractor will inform every complainant of all of their avenues of appeal.
6. **Training and Promotion:**
   a. The contractor will assist in locating, qualifying, and increasing the skills of minorities and women who are applicants for employment or current employees. Such efforts should be aimed at developing full journey level status employees in the type of trade or job classification involved.
   b. Consistent with the contractor's work force requirements and as permissible under Federal and State regulations, the contractor shall make full use of training programs, i.e., apprenticeship, and on-the-job training programs for the geographical area of contract performance. In the event a special provision for training is provided under this contract, this subparagraph will be superseded as indicated in the special provision. The contracting agency may reserve training positions for persons who receive welfare assistance in accordance with 23 U.S.C. 140(a).
   c The contractor will advise employees and applicants for employment of available training programs and entrance requirements for each.
   d. The contractor will periodically review the training and promotion potential of employees who are minorities and women and will encourage eligible employees to apply for such training and promotion.

7. **Unions:** If the contractor relies in whole or in part upon unions as a source of employees, the contractor will use good faith efforts to obtain the cooperation of such unions to increase opportunities for minorities and women. Actions by the contractor, either directly or through a contractor's association acting as agent, will include the procedures set forth below:
   a. The contractor will use good faith efforts to develop, in cooperation with the unions, joint training programs aimed toward qualifying more minorities and women for membership in the unions and increasing the skills of minorities and women so that they may qualify for higher paying employment.
   b. The contractor will use good faith efforts to incorporate an EEO clause into each union agreement to the end that such union will be contractually bound to refer applicants without regard to their race, color, religion, sex, national origin, age or disability.
   c. The contractor is to obtain information as to the referral practices and policies of the labor union except that to the extent such information is within the exclusive possession of the labor union and such labor union refuses to furnish such information to the contractor, the contractor shall so certify to the contracting agency and shall set forth what efforts have been made to obtain such information.
   d. In the event the union is unable to provide the contractor with a reasonable flow of referrals within the time limit set forth in the collective bargaining agreement, the contractor will, through independent recruitment efforts, fill the employment vacancies without regard to race, color, religion, sex, national origin, age or disability; making full efforts to obtain qualified and/or qualifiable minorities and women. The failure of a union to provide sufficient referrals (even though it is obligated to provide exclusive referrals under the terms of a collective bargaining agreement) does not relieve the contractor from the requirements of this paragraph. In the event the union referral practice prevents the contractor from meeting the obligations pursuant to Executive Order 11246, as amended, and these special provisions, such contractor shall immediately notify the contracting agency.
8. **Reasonable Accommodation for Applicants / Employees with Disabilities:** The contractor must be familiar with the requirements for and comply with the Americans with Disabilities Act and all rules and regulations established there under. Employers must provide reasonable accommodation in all employment activities unless to do so would cause an undue hardship.
9. **Selection of Subcontractors, Procurement of Materials and Leasing of Equipment:** The contractor shall not discriminate on the grounds of race, color, religion, sex, national origin, age or disability in the selection and retention of subcontractors, including procurement of materials and leases of equipment. The contractor shall take all necessary and reasonable steps to ensure nondiscrimination in the administration of this contract.
   a. The contractor shall notify all potential subcontractors and suppliers and lessors of their EEO obligations under this contract.
   b. The contractor will use good faith efforts to ensure subcontractor compliance with their EEO obligations.
10. **Assurance Required by 49 CFR 26.13(b):**
   a. The requirements of 49 CFR Part 26 and the State DOT's U.S. DOT-approved DBE program are incorporated by reference.
   b. The contractor or subcontractor shall not discriminate on the basis of race, color, national origin, or sex in the performance of this contract. The contractor shall carry out applicable requirements of 49 CFR Part 26 in the award and administration of DOT-assisted contracts. Failure by the contractor to carry out these requirements is a material breach of this contract, which may result in the termination of this contract or such other remedy as the contracting agency deems appropriate.
11. **Records and Reports:** The contractor shall keep such records as necessary to document compliance with the EEO requirements. Such records shall be retained for a period of three years following the date of the final payment to the contractor for all contract work and shall be available at reasonable times and places for inspection by authorized representatives of the contracting agency and the FHWA.
   a. The records kept by the contractor shall document the following:
      (1) The number and work hours of minority and non-minority group members and women employed in each work classification on the project;
      (2) The progress and efforts being made in cooperation with unions, when applicable, to increase employment opportunities for minorities and women; and
      (3) The progress and efforts being made in locating, hiring, training, qualifying, and upgrading minorities and women;
   b. The contractors and subcontractors will submit an annual report to the contracting agency each July for the duration of the project, indicating the number of minority, women, and non-minority group employees currently engaged in each work classification required by the contract work. This information is to be reported on Form FHWA-1391. The staffing data should represent the project work force on board in all or any part of the last payroll period preceding the end of July. If on-the-job training is being required by special provision, the contractor will be required to collect and report training data. The employment data should reflect the work force on board during all or any part of the last payroll period preceding the end of July.

III. NONSEGREGATED FACILITIES

This provision is applicable to all Federal-aid construction contracts and to all related construction subcontracts of $10,000 or more.

The contractor must ensure that facilities provided for employees are provided in such a manner that segregation on the basis of race, color, religion, sex, or national origin cannot result. The contractor may neither require such segregated use by written or oral policies nor tolerate such use by employee custom. The contractor's obligation extends further to ensure that its employees are not assigned to perform their services at any location, under the contractor's control, where the facilities are segregated. The term "facilities" includes waiting rooms, work areas, restaurants and other eating areas, time clocks, restrooms, washrooms, locker rooms, and other storage or dressing areas, parking lots, drinking fountains, recreation or entertainment areas, transportation, and housing provided for employees. The contractor shall provide separate or single-user restrooms and necessary dressing or sleeping areas to assure privacy between sexes.

IV. DAVIS-BACON AND RELATED ACT PROVISIONS

This section is applicable to all Federal-aid construction projects exceeding $2,000 and to all related subcontracts and lower-tier subcontracts (regardless of subcontract size). The requirements apply to all projects located within the right-of-way of a roadway that is functionally classified as Federal-aid highway. This excludes roadways functionally classified as local roads or rural minor collectors, which are exempt. Contracting agencies may elect to apply these requirements to other projects.

The following provisions are from the U.S. Department of Labor regulations in 29 CFR 5.5 "Contract provisions and related matters" with minor revisions to conform to the FHWA-1273 format and FHWA program requirements.

1. **Minimum wages**
   a. All laborers and mechanics employed or working upon the site of the work, will be paid unconditionally and not less often than once a week, and without subsequent deduction or rebate on any account (except such payroll deductions as are permitted by regulations issued by the

Secretary of Labor under the Copeland Act (29 CFR part 3)), the full amount of wages and bona fide fringe benefits (or cash equivalents thereof) due at time of payment computed at rates not less than those contained in the wage determination of the Secretary of Labor which is attached hereto and made a part hereof, regardless of any contractual relationship which may be alleged to exist between the contractor and such laborers and mechanics.

Contributions made or costs reasonably anticipated for bona fide fringe benefits under section 1(b)(2) of the Davis-Bacon Act on behalf of laborers or mechanics are considered wages paid to such laborers or mechanics, subject to the provisions of paragraph 1.d. of this section; also, regular contributions made or costs incurred for more than a weekly period (but not less often than quarterly) under plans, funds, or programs which cover the particular weekly period, are deemed to be constructively made or incurred during such weekly period. Such laborers and mechanics shall be paid the appropriate wage rate and fringe benefits on the wage determination for the classification of work actually performed, without regard to skill, except as provided in 29 CFR 5.5(a)(4). Laborers or mechanics performing work in more than one classification may be compensated at the rate specified for each classification for the time actually worked therein: Provided, That the employer's payroll records accurately set forth the time spent in each classification in which work is performed. The wage determination (including any additional classification and wage rates conformed under paragraph 1.b. of this section) and the Davis-Bacon poster (WH–1321) shall be posted at all times by the contractor and its subcontractors at the site of the work in a prominent and accessible place where it can be easily seen by the workers.

b. (1) The contracting officer shall require that any class of laborers or mechanics, including helpers, which is not listed in the wage determination and which is to be employed under the contract shall be classified in conformance with the wage determination. The contracting officer shall approve an additional classification and wage rate and fringe benefits therefore only when the following criteria have been met:

(i) The work to be performed by the classification requested is not performed by a classification in the wage determination; and

(ii) The classification is utilized in the area by the construction industry; and

(iii) The proposed wage rate, including any bona fide fringe benefits, bears a reasonable relationship to the wage rates contained in the wage determination.

(2) If the contractor and the laborers and mechanics to be employed in the classification (if known), or their representatives, and the contracting officer agree on the classification and wage rate (including the amount designated for fringe benefits where appropriate), a report of the action taken shall be sent by the contracting officer to the Administrator of the Wage and Hour Division, Employment Standards Administration, U.S. Department of Labor, Washington, DC 20210. The Administrator, or an authorized representative, will approve, modify, or disapprove every additional classification action within 30 days of receipt and so advise the contracting officer or will notify the contracting officer within the 30-day period that additional time is necessary.

(3) In the event the contractor, the laborers or mechanics to be employed in the classification or their representatives, and the contracting officer do not agree on the proposed classification and wage rate (including the amount designated for fringe benefits, where appropriate), the contracting officer shall refer the questions, including the views of all interested parties and the recommendation of the contracting officer, to the Wage and Hour Administrator for determination. The Wage and Hour Administrator, or an authorized representative, will issue a determination within 30 days of receipt and so advise the contracting officer or will notify the contracting officer within the 30-day period that additional time is necessary.

(4) The wage rate (including fringe benefits where appropriate) determined pursuant to paragraphs 1.b.(2) or 1.b.(3) of this section, shall be paid to all workers performing work in the classification under this contract from the first day on which work is performed in the classification.

c. Whenever the minimum wage rate prescribed in the contract for a class of laborers or mechanics includes a fringe benefit which is not expressed as an hourly rate, the contractor shall either pay the benefit as stated in the wage determination or shall pay another bona fide fringe benefit or an hourly cash equivalent thereof.

d. If the contractor does not make payments to a trustee or other third person, the contractor may consider as part of the wages of any laborer or mechanic the amount of any costs reasonably anticipated in providing bona fide fringe benefits under a plan or program, Provided, That the Secretary of Labor has found, upon the written request of the contractor, that the applicable standards of the Davis-Bacon Act have been met. The Secretary of Labor may require the contractor to set aside in a separate account assets for the meeting of obligations under the plan or program.

2. **Withholding.** The contracting agency shall upon its own action or upon written request of an authorized representative of the Department of Labor, withhold or cause to be withheld from the contractor under this contract, or any other Federal contract with the same prime contractor, or any other federally-assisted contract subject to Davis-Bacon prevailing wage requirements, which is held by the same prime contractor, so much of the accrued payments or advances as may be considered necessary to pay laborers and mechanics, including apprentices, trainees, and helpers, employed by the contractor or any subcontractor the full amount of wages required by the contract. In the event of failure to pay any laborer or mechanic, including any apprentice, trainee, or helper, employed or working on the site of the work, all or part of the wages required by the contract, the contracting agency may, after written notice to the contractor, take such action as may be necessary to cause the suspension of any further payment, advance, or guarantee of funds until such violations have ceased.

3. **Payrolls and basic records**

a. Payrolls and basic records relating thereto shall be maintained by the contractor during the course of the work and preserved for a period of three years thereafter for all laborers and mechanics working at the site of the work. Such records shall contain the name, address, and social security number of each such worker, his or her correct classification, hourly rates of wages paid (including rates of contributions or costs anticipated for bona fide fringe benefits or cash equivalents thereof of the types described in section 1(b)(2)(B) of the Davis-Bacon Act), daily and weekly number of hours worked, deductions made and actual wages paid. Whenever the Secretary of Labor has found under 29 CFR 5.5(a)(1)(iv) that the wages of any laborer or mechanic include the amount of any costs reasonably anticipated in providing benefits under a plan or program described in section 1(b)(2)(B) of the Davis-Bacon Act, the contractor shall maintain records which show that the commitment to provide such benefits is enforceable, that the plan or program is financially responsible, and that the plan or program has been communicated in writing to the laborers or mechanics affected, and records which show the costs anticipated or the actual cost incurred in providing such benefits. Contractors employing apprentices or trainees under approved programs shall maintain written evidence of the registration of apprenticeship programs and certification of trainee programs, the registration of the apprentices and trainees, and the ratios and wage rates prescribed in the applicable programs.

b. (1) The contractor shall submit weekly for each week in which any contract work is performed a copy of all payrolls to the contracting agency. The payrolls submitted shall set out accurately and completely all of the information required to be maintained under 29 CFR 5.5(a)(3)(i), except that full social security numbers and home addresses shall not be included on weekly transmittals. Instead the

payrolls shall only need to include an individually identifying number for each employee (e.g. , the last four digits of the employee's social security number). The required weekly payroll information may be submitted in any form desired. Optional Form WH–347 is available for this purpose from the Wage and Hour Division Web site at http://www.dol.gov/esa/whd/forms/ wh347instr.htm or its successor site. The prime contractor is responsible for the submission of copies of payrolls by all subcontractors. Contractors and subcontractors shall maintain the full social security number and current address of each covered worker, and shall provide them upon request to the contracting agency for transmission to the State DOT, the FHWA or the Wage and Hour Division of the Department of Labor for purposes of an investigation or audit of compliance with prevailing wage requirements. It is not a violation of this section for a prime contractor to require a subcontractor to provide addresses and social security numbers to the prime contractor for its own records, without weekly submission to the contracting agency.

(2) Each payroll submitted shall be accompanied by a "Statement of Compliance," signed by the contractor or subcontractor or his or her agent who pays or supervises the payment of the persons employed under the contract and shall certify the following:

(i) That the payroll for the payroll period contains the information required to be provided under §5.5 (a)(3)(ii) of Regulations, 29 CFR part 5, the appropriate information is being maintained under §5.5 (a)(3)(i) of Regulations, 29 CFR part 5, and that such information is correct and complete;

(ii) That each laborer or mechanic (including each helper, apprentice, and trainee) employed on the contract during the payroll period has been paid the full weekly wages earned, without rebate, either directly or indirectly, and that no deductions have been made either directly or indirectly from the full wages earned, other than permissible deductions as set forth in Regulations, 29 CFR part 3;

(iii) That each laborer or mechanic has been paid not less than the applicable wage rates and fringe benefits or cash equivalents for the classification of work performed, as specified in the applicable wage determination incorporated into the contract.

(3) The weekly submission of a properly executed certification set forth on the reverse side of Optional Form WH–347 shall satisfy the requirement for submission of the "Statement of Compliance" required by paragraph 3.b.(2) of this section.

(4) The falsification of any of the above certifications may subject the contractor or subcontractor to civil or criminal prosecution under section 1001 of title 18 and section 231 of title 31 of the United States Code.

c. The contractor or subcontractor shall make the records required under paragraph 3.a. of this section available for inspection, copying, or transcription by authorized representatives of the contracting agency, the State DOT, the FHWA, or the Department of Labor, and shall permit such representatives to interview employees during working hours on the job. If the contractor or subcontractor fails to submit the required records or to make them available, the FHWA may, after written notice to the contractor, the contracting agency or the State DOT, take such action as may be necessary to cause the suspension of any further payment, advance, or guarantee of funds. Furthermore, failure to submit the required records upon request or to make such records available may be grounds for debarment action pursuant to 29 CFR 5.12.

4. **Apprentices and trainees**

a. Apprentices (programs of the USDOL). Apprentices will be permitted to work at less than the predetermined rate for the work they performed when they are employed pursuant to and individually registered in a bona fide apprenticeship program registered with the U.S. Department of Labor, Employment and Training Administration, Office of Apprenticeship Training, Employer and Labor Services, or with a State Apprenticeship Agency recognized by the Office, or if a person is employed in his or her first 90 days of probationary employment as an apprentice in such an apprenticeship program, who is not individually registered in the program, but who has been certified by the Office of Apprenticeship Training, Employer and Labor Services or a State Apprenticeship Agency (where appropriate) to be eligible for probationary employment as an apprentice.

The allowable ratio of apprentices to journeymen on the job site in any craft classification shall not be greater than the ratio permitted to the contractor as to the entire work force under the registered program. Any worker listed on a payroll at an apprentice wage rate, who is not registered or otherwise employed as stated above, shall be paid not less than the applicable wage rate on the wage determination for the classification of work actually performed. In addition, any apprentice performing work on the job site in excess of the ratio permitted under the registered program shall be paid not less than the applicable wage rate on the wage determination for the work actually performed. Where a contractor is performing construction on a project in a locality other than that in which its program is registered, the ratios and wage rates (expressed in percentages of the journeyman's hourly rate) specified in the contractor's or subcontractor's registered program shall be observed.

Every apprentice must be paid at not less than the rate specified in the registered program for the apprentice's level of progress, expressed as a percentage of the journeymen hourly rate specified in the applicable wage determination. Apprentices shall be paid fringe benefits in accordance with the provisions of the apprenticeship program. If the apprenticeship program does not specify fringe benefits, apprentices must be paid the full amount of fringe benefits listed on the wage determination for the applicable classification. If the Administrator determines that a different practice prevails for the applicable apprentice classification, fringes shall be paid in accordance with that determination.

In the event the Office of Apprenticeship Training, Employer and Labor Services, or a State Apprenticeship Agency recognized by the Office, withdraws approval of an apprenticeship program, the contractor will no longer be permitted to utilize apprentices at less than the applicable predetermined rate for the work performed until an acceptable program is approved.

b. Trainees (programs of the USDOL). Except as provided in 29 CFR 5.16, trainees will not be permitted to work at less than the predetermined rate for the work performed unless they are employed pursuant to and individually registered in a program which has received prior approval, evidenced by formal certification by the U.S. Department of Labor, Employment and Training Administration.

The ratio of trainees to journeymen on the job site shall not be greater than permitted under the plan approved by the Employment and Training Administration.

Every trainee must be paid at not less than the rate specified in the approved program for the trainee's level of progress, expressed as a percentage of the journeyman hourly rate specified in the applicable wage determination. Trainees shall be paid fringe benefits in accordance with the provisions of the trainee program. If the trainee program does not mention fringe benefits, trainees shall be paid the full amount of fringe benefits listed on the wage determination unless the Administrator of the Wage and Hour Division determines that there is an apprenticeship program associated with the corresponding journeyman wage rate on the wage determination which provides for less than full fringe benefits for apprentices. Any employee listed on the payroll at a trainee rate who is not registered and participating in a training plan approved by the Employment and Training Administration shall be paid not less than the applicable wage rate on the wage determination for the classification of work actually performed. In addition, any trainee performing work on the job site in excess of the ratio permitted under the registered program shall be paid not less than the applicable wage rate on the wage determination for the work actually performed.

In the event the Employment and Training Administration withdraws approval of a training program, the contractor will no longer be permitted to utilize trainees at less than the applicable predetermined rate for the work performed until an acceptable program is approved.

c. Equal employment opportunity. The utilization of apprentices, trainees and journeymen under this part shall be in conformity with the equal employment opportunity requirements of Executive Order 11246, as amended, and 29 CFR part 30.

d. Apprentices and Trainees (programs of the U.S. DOT). Apprentices and trainees working under apprenticeship and skill training programs which have been certified by the Secretary of Transportation as promoting EEO in connection with Federal-aid highway construction programs are not subject to the requirements of paragraph 4 of this Section IV. The straight time hourly wage rates for apprentices and trainees under such programs will be established by the particular programs. The ratio of apprentices and trainees to journeymen shall not be greater than permitted by the terms of the particular program.

5. **Compliance with Copeland Act requirements.** The contractor shall comply with the requirements of 29 CFR part 3, which are incorporated by reference in this contract.
6. **Subcontracts.** The contractor or subcontractor shall insert Form FHWA-1273 in any subcontracts and also require the subcontractors to include Form FHWA-1273 in any lower tier subcontracts. The prime contractor shall be responsible for the compliance by any subcontractor or lower tier subcontractor with all the contract clauses in 29 CFR 5.5.
7. **Contract termination:** debarment. A breach of the contract clauses in 29 CFR 5.5 may be grounds for termination of the contract, and for debarment as a contractor and a subcontractor as provided in 29 CFR 5.12.
8. **Compliance with Davis-Bacon and Related Act requirements.** All rulings and interpretations of the Davis-Bacon and Related Acts contained in 29 CFR parts 1, 3, and 5 are herein incorporated by reference in this contract.
9. **Disputes concerning labor standards.** Disputes arising out of the labor standards provisions of this contract shall not be subject to the general disputes clause of this contract. Such disputes shall be resolved in accordance with the procedures of the Department of Labor set forth in 29 CFR parts 5, 6, and 7. Disputes within the meaning of this clause include disputes between the contractor (or any of its subcontractors) and the contracting agency, the U.S. Department of Labor, or the employees or their representatives.
10. **Certification of eligibility.**
    a. By entering into this contract, the contractor certifies that neither it (nor he or she) nor any person or firm who has an interest in the contractor's firm is a person or firm ineligible to be awarded Government contracts by virtue of section 3(a) of the Davis-Bacon Act or 29 CFR 5.12(a)(1).
    b. No part of this contract shall be subcontracted to any person or firm ineligible for award of a Government contract by virtue of section 3(a) of the Davis-Bacon Act or 29 CFR 5.12(a)(1).
    c. The penalty for making false statements is prescribed in the U.S. Criminal Code, 18 U.S.C. 1001.

V. CONTRACT WORK HOURS AND SAFETY STANDARDS ACT

The following clauses apply to any Federal-aid construction contract in an amount in excess of $100,000 and subject to the overtime provisions of the Contract Work Hours and Safety Standards Act. These clauses shall be inserted in addition to the clauses required by 29 CFR 5.5(a) or 29 CFR 4.6. As used in this paragraph, the terms laborers and mechanics include watchmen and guards.

1. **Overtime requirements.** No contractor or subcontractor contracting for any part of the contract work which may require or involve the employment of laborers or mechanics shall require or permit any such laborer or mechanic in any workweek in which he or she is employed on such work to work in excess of forty hours in such workweek unless such laborer or mechanic receives compensation at a rate not less than one and one-half times the basic rate of pay for all hours worked in excess of forty hours in such workweek.
2. **Violation; liability for unpaid wages; liquidated damages.** In the event of any violation of the clause set forth in paragraph (1.) of this section, the contractor and any subcontractor responsible therefor shall be liable for the unpaid wages. In addition, such contractor and subcontractor shall be liable to the United States (in the case of work done under contract for the District of Columbia or a territory, to such District or to such territory), for liquidated damages. Such liquidated damages shall be computed with respect to each individual laborer or mechanic, including watchmen and guards, employed in violation of the clause set forth in paragraph (1.) of this section, in the sum of $10 for each calendar day on which such individual was required or permitted to work in excess of the standard workweek of forty hours without payment of the overtime wages required by the clause set forth in paragraph (1.) of this section.
3. **Withholding for unpaid wages and liquidated damages.** The FHWA or the contacting agency shall upon its own action or upon written request of an authorized representative of the Department of Labor withhold or cause to be withheld, from any moneys payable on account of work performed by the contractor or subcontractor under any such contract or any other Federal contract with the same prime contractor, or any other federally-assisted contract subject to the Contract Work Hours and Safety Standards Act, which is held by the same prime contractor, such sums as may be determined to be necessary to satisfy any liabilities of such contractor or subcontractor for unpaid wages and liquidated damages as provided in the clause set forth in paragraph (2.) of this section.
4. **Subcontracts.** The contractor or subcontractor shall insert in any subcontracts the clauses set forth in paragraph (1.) through (4.) of this section and also a clause requiring the subcontractors to include these clauses in any lower tier subcontracts. The prime contractor shall be responsible for compliance by any subcontractor or lower tier subcontractor with the clauses set forth in paragraphs (1.) through (4.) of this section.

VI. SUBLETTING OR ASSIGNING THE CONTRACT

This provision is applicable to all Federal-aid construction contracts on the National Highway System.

1. The contractor shall perform with its own organization contract work amounting to not less than 30 percent (or a greater percentage if specified elsewhere in the contract) of the total original contract price, excluding any specialty items designated by the contracting agency. Specialty items may be performed by subcontract and the amount of any such specialty items performed may be deducted from the total original contract price before computing the amount of work required to be performed by the contractor's own organization (23 CFR 635.116).
    a. The term "perform work with its own organization" refers to workers employed or leased by the prime contractor, and equipment owned or rented by the prime contractor, with or without operators. Such term does not include employees or equipment of a subcontractor or lower tier subcontractor, agents of the prime contractor, or any other assignees. The term may include payments for the costs of hiring leased employees

from an employee leasing firm meeting all relevant Federal and State regulatory requirements. Leased employees may only be included in this term if the prime contractor meets all of the following conditions:
(1) the prime contractor maintains control over the supervision of the day-to-day activities of the leased employees;
(2) the prime contractor remains responsible for the quality of the work of the leased employees;
(3) the prime contractor retains all power to accept or exclude individual employees from work on the project; and
(4) the prime contractor remains ultimately responsible for the payment of predetermined minimum wages, the submission of payrolls, statements of compliance and all other Federal regulatory requirements.

b. "Specialty Items" shall be construed to be limited to work that requires highly specialized knowledge, abilities, or equipment not ordinarily available in the type of contracting organizations qualified and expected to bid or propose on the contract as a whole and in general are to be limited to minor components of the overall contract.

2. The contract amount upon which the requirements set forth in paragraph (1) of Section VI is computed includes the cost of material and manufactured products which are to be purchased or produced by the contractor under the contract provisions.
3. The contractor shall furnish (a) a competent superintendent or supervisor who is employed by the firm, has full authority to direct performance of the work in accordance with the contract requirements, and is in charge of all construction operations (regardless of who performs the work) and (b) such other of its own organizational resources (supervision, management, and engineering services) as the contracting officer determines is necessary to assure the performance of the contract.
4. No portion of the contract shall be sublet, assigned or otherwise disposed of except with the written consent of the contracting officer, or authorized representative, and such consent when given shall not be construed to relieve the contractor of any responsibility for the fulfillment of the contract. Written consent will be given only after the contracting agency has assured that each subcontract is evidenced in writing and that it contains all pertinent provisions and requirements of the prime contract.
5. The 30% self-performance requirement of paragraph (1) is not applicable to design-build contracts; however, contracting agencies may establish their own self-performance requirements.

VII. SAFETY: ACCIDENT PREVENTION

This provision is applicable to all Federal-aid construction contracts and to all related subcontracts.

1. In the performance of this contract the contractor shall comply with all applicable Federal, State, and local laws governing safety, health, and sanitation (23 CFR 635). The contractor shall provide all safeguards, safety devices and protective equipment and take any other needed actions as it determines, or as the contracting officer may determine, to be reasonably necessary to protect the life and health of employees on the job and the safety of the public and to protect property in connection with the performance of the work covered by the contract.
2. It is a condition of this contract, and shall be made a condition of each subcontract, which the contractor enters into pursuant to this contract, that the contractor and any subcontractor shall not permit any employee, in performance of the contract, to work in surroundings or under conditions which are unsanitary, hazardous or dangerous to his/her health or safety, as determined under construction safety and health standards (29 CFR 1926) promulgated by the Secretary of Labor, in accordance with Section 107 of the Contract Work Hours and Safety Standards Act (40 U.S.C. 3704).
3. Pursuant to 29 CFR 1926.3, it is a condition of this contract that the Secretary of Labor or authorized representative thereof, shall have right of entry to any site of contract performance to inspect or investigate the matter of compliance with the construction safety and health standards and to carry out the duties of the Secretary under Section 107 of the Contract Work Hours and Safety Standards Act (40 U.S.C.3704).

VIII. FALSE STATEMENTS CONCERNING HIGHWAY PROJECTS

This provision is applicable to all Federal-aid construction contracts and to all related subcontracts.

In order to assure high quality and durable construction in conformity with approved plans and specifications and a high degree of reliability on statements and representations made by engineers, contractors, suppliers, and workers on Federal-aid highway projects, it is essential that all persons concerned with the project perform their functions as carefully, thoroughly, and honestly as possible. Willful falsification, distortion, or misrepresentation with respect to any facts related to the project is a violation of Federal law. To prevent any misunderstanding regarding the seriousness of these and similar acts, Form FHWA-1022 shall be posted on each Federal-aid highway project (23 CFR 635) in one or more places where it is readily available to all persons concerned with the project:

18 U.S.C. 1020 reads as follows:

"Whoever, being an officer, agent, or employee of the United States, or of any State or Territory, or whoever, whether a person, association, firm, or corporation, knowingly makes any false statement, false representation, or false report as to the character, quality, quantity, or cost of the material used or to be used, or the quantity or quality of the work performed or to be performed, or the cost thereof in connection with the submission of plans, maps, specifications, contracts, or costs of construction on any highway or related project submitted for approval to the Secretary of Transportation; or

Whoever knowingly makes any false statement, false representation, false report or false claim with respect to the character, quality, quantity, or cost of any work performed or to be performed, or materials furnished or to be furnished, in connection with the construction of any highway or related project approved by the Secretary of Transportation; or

Whoever knowingly makes any false statement or false representation as to material fact in any statement, certificate, or report submitted pursuant to provisions of the Federal-aid Roads Act approved July 1, 1916, (39 Stat. 355), as amended and supplemented;

Shall be fined under this title or imprisoned not more than 5 years or both."

IX. IMPLEMENTATION OF CLEAN AIR ACT AND FEDERAL WATER POLLUTION CONTROL ACT

This provision is applicable to all Federal-aid construction contracts and to all related subcontracts.

By submission of this bid/proposal or the execution of this contract, or subcontract, as appropriate, the bidder, proposer, Federal-aid construction contractor, or subcontractor, as appropriate, will be deemed to have stipulated as follows:

1. That any person who is or will be utilized in the performance of this contract is not prohibited from receiving an award due to a violation of Section 508 of the Clean Water Act or Section 306 of the Clean Air Act.
2. That the contractor agrees to include or cause to be included the requirements of paragraph (1) of this Section X in every subcontract, and further agrees to take such action as the contracting agency may direct as a means of enforcing such requirements.

X. CERTIFICATION REGARDING DEBARMENT, SUSPENSION, INELIGIBILITY AND VOLUNTARY EXCLUSION

This provision is applicable to all Federal-aid construction contracts, design-build contracts, subcontracts, lower-tier subcontracts, purchase orders, lease agreements, consultant contracts or any other covered transaction requiring FHWA approval or that is estimated to cost $25,000 or more – as defined in 2 CFR Parts 180 and 1200.

1. **Instructions for Certification – First Tier Participants:**
   a. By signing and submitting this proposal, the prospective first tier participant is providing the certification set out below.
   b. The inability of a person to provide the certification set out below will not necessarily result in denial of participation in this covered transaction. The prospective first tier participant shall submit an explanation of why it cannot provide the certification set out below. The certification or explanation will be considered in connection with the department or agency's determination whether to enter into this transaction. However, failure of the prospective first tier participant to furnish a certification or an explanation shall disqualify such a person from participation in this transaction.
   c. The certification in this clause is a material representation of fact upon which reliance was placed when the contracting agency determined to enter into this transaction. If it is later determined that the prospective participant knowingly rendered an erroneous certification, in addition to other remedies available to the Federal Government, the contracting agency may terminate this transaction for cause of default.
   d. The prospective first tier participant shall provide immediate written notice to the contracting agency to whom this proposal is submitted if any time the prospective first tier participant learns that its certification was erroneous when submitted or has become erroneous by reason of changed circumstances.
   e. The terms "covered transaction," "debarred," "suspended," "ineligible," "participant," "person," "principal," and "voluntarily excluded," as used in this clause, are defined in 2 CFR Parts 180 and 1200. "First Tier Covered Transactions" refers to any covered transaction between a grantee or subgrantee of Federal funds and a participant (such as the prime or general contract). "Lower Tier Covered Transactions" refers to any covered transaction under a First Tier Covered Transaction (such as subcontracts). "First Tier Participant" refers to the participant who has entered into a covered transaction with a grantee or subgrantee of Federal funds (such as the prime or general contractor). "Lower Tier Participant" refers any participant who has entered into a covered transaction with a First Tier Participant or other Lower Tier Participants (such as subcontractors and suppliers).
   f. The prospective first tier participant agrees by submitting this proposal that, should the proposed covered transaction be entered into, it shall not knowingly enter into any lower tier covered transaction with a person who is debarred, suspended, declared ineligible, or voluntarily excluded from participation in this covered transaction, unless authorized by the department or agency entering into this transaction.
   g. The prospective first tier participant further agrees by submitting this proposal that it will include the clause titled "Certification Regarding Debarment, Suspension, Ineligibility and Voluntary Exclusion-Lower Tier Covered Transactions," provided by the department or contracting agency, entering into this covered transaction, without modification, in all lower tier covered transactions and in all solicitations for lower tier covered transactions exceeding the $25,000 threshold.
   h. A participant in a covered transaction may rely upon a certification of a prospective participant in a lower tier covered transaction that is not debarred, suspended, ineligible, or voluntarily excluded from the covered transaction, unless it knows that the certification is erroneous. A participant is responsible for ensuring that its principals are not suspended, debarred, or otherwise ineligible to participate in covered transactions. To verify the eligibility of its principals, as well as the eligibility of any lower tier prospective participants, each participant may, but is not required to, check the Excluded Parties List System website (https://www.epls.gov/), which is compiled by the General Services Administration.
   i. Nothing contained in the foregoing shall be construed to require the establishment of a system of records in order to render in good faith the certification required by this clause. The knowledge and information of the prospective participant is not required to exceed that which is normally possessed by a prudent person in the ordinary course of business dealings.
   j. Except for transactions authorized under paragraph (f) of these instructions, if a participant in a covered transaction knowingly enters into a lower tier covered transaction with a person who is suspended, debarred, ineligible, or voluntarily excluded from participation in this transaction, in addition to other remedies available to the Federal Government, the department or agency may terminate this transaction for cause or default.

* * * * *

2. **Certification Regarding Debarment, Suspension, Ineligibility and Voluntary Exclusion – First Tier Participants:**
   a. The prospective first tier participant certifies to the best of its knowledge and belief, that it and its principals:
      (1) Are not presently debarred, suspended, proposed for debarment, declared ineligible, or voluntarily excluded from participating in covered transactions by any Federal department or agency;
      (2) Have not within a three-year period preceding this proposal been convicted of or had a civil judgment rendered against them for commission of fraud or a criminal offense in connection with obtaining, attempting to obtain, or performing a public (Federal, State or local) transaction or contract under a public transaction; violation of Federal or State antitrust statutes or commission of embezzlement, theft, forgery, bribery, falsification or destruction of records, making false statements, or receiving stolen property;
      (3) Are not presently indicted for or otherwise criminally or civilly charged by a governmental entity (Federal, State or local) with commission of any of the offenses enumerated in paragraph (a)(2) of this certification; and
      (4) Have not within a three-year period preceding this application/proposal had one or more public transactions (Federal, State or local) terminated for cause or default.
   b. Where the prospective participant is unable to certify to any of the statements in this certification, such prospective participant shall attach an explanation to this proposal.

2. **Instructions for Certification - Lower Tier Participants:**
   (Applicable to all subcontracts, purchase orders and other lower tier transactions requiring prior FHWA approval or estimated to cost $25,000 or more - 2 CFR Parts 180 and 1200)
   a. By signing and submitting this proposal, the prospective lower tier is providing the certification set out below.
   b. The certification in this clause is a material representation of fact upon which reliance was placed when this transaction was entered into. If it is later determined that the prospective lower tier participant knowingly rendered an erroneous certification, in addition to other remedies available to the Federal Government, the department, or agency with which this transaction originated may pursue available remedies, including suspension and/or debarment.

c. The prospective lower tier participant shall provide immediate written notice to the person to which this proposal is submitted if at any time the prospective lower tier participant learns that its certification was erroneous by reason of changed circumstances.
d. The terms "covered transaction," "debarred," "suspended," "ineligible," "participant," "person," "principal," and "voluntarily excluded," as used in this clause, are defined in 2 CFR Parts 180 and 1200. You may contact the person to which this proposal is submitted for assistance in obtaining a copy of those regulations. "First Tier Covered Transactions" refers to any covered transaction between a grantee or subgrantee of Federal funds and a participant (such as the prime or general contract). "Lower Tier Covered Transactions" refers to any covered transaction under a First Tier Covered Transaction (such as subcontracts). "First Tier Participant" refers to the participant who has entered into a covered transaction with a grantee or subgrantee of Federal funds (such as the prime or general contractor). "Lower Tier Participant" refers any participant who has entered into a covered transaction with a First Tier Participant or other Lower Tier Participants (such as subcontractors and suppliers).
e. The prospective lower tier participant agrees by submitting this proposal that, should the proposed covered transaction be entered into, it shall not knowingly enter into any lower tier covered transaction with a person who is debarred, suspended, declared ineligible, or voluntarily excluded from participation in this covered transaction, unless authorized by the department or agency with which this transaction originated.
f. The prospective lower tier participant further agrees by submitting this proposal that it will include this clause titled "Certification Regarding Debarment, Suspension, Ineligibility and Voluntary Exclusion-Lower Tier Covered Transaction," without modification, in all lower tier covered transactions and in all solicitations for lower tier covered transactions exceeding the $25,000 threshold.
g. A participant in a covered transaction may rely upon a certification of a prospective participant in a lower tier covered transaction that is not debarred, suspended, ineligible, or voluntarily excluded from the covered transaction, unless it knows that the certification is erroneous. A participant is responsible for ensuring that its principals are not suspended, debarred, or otherwise ineligible to participate in covered transactions. To verify the eligibility of its principals, as well as the eligibility of any lower tier prospective participants, each participant may, but is not required to, check the Excluded Parties List System website (https://www.epls.gov/), which is compiled by the General Services Administration.
h. Nothing contained in the foregoing shall be construed to require establishment of a system of records in order to render in good faith the certification required by this clause. The knowledge and information of participant is not required to exceed that which is normally possessed by a prudent person in the ordinary course of business dealings.
i. Except for transactions authorized under paragraph e of these instructions, if a participant in a covered transaction knowingly enters into a lower tier covered transaction with a person who is suspended, debarred, ineligible, or voluntarily excluded from participation in this transaction, in addition to other remedies available to the Federal Government, the department or agency with which this transaction originated may pursue available remedies, including suspension and/or debarment.

* * * * *

Certification Regarding Debarment, Suspension, Ineligibility and Voluntary Exclusion--Lower Tier Participants:

1. The prospective lower tier participant certifies, by submission of this proposal, that neither it nor its principals is presently debarred, suspended, proposed for debarment, declared ineligible, or voluntarily excluded from participating in covered transactions by any Federal department or agency.
2. Where the prospective lower tier participant is unable to certify to any of the statements in this certification, such prospective participant shall attach an explanation to this proposal.

* * * * *

XI. CERTIFICATION REGARDING USE OF CONTRACT FUNDS FOR LOBBYING

This provision is applicable to all Federal-aid construction contracts and to all related subcontracts which exceed $100,000 (49 CFR 20).

1. The prospective participant certifies, by signing and submitting this bid or proposal, to the best of his or her knowledge and belief, that:
   a. No Federal appropriated funds have been paid or will be paid, by or on behalf of the undersigned, to any person for influencing or attempting to influence an officer or employee of any Federal agency, a Member of Congress, an officer or employee of Congress, or an employee of a Member of Congress in connection with the awarding of any Federal contract, the making of any Federal grant, the making of any Federal loan, the entering into of any cooperative agreement, and the extension, continuation, renewal, amendment, or modification of any Federal contract, grant, loan, or cooperative agreement.
   b. If any funds other than Federal appropriated funds have been paid or will be paid to any person for influencing or attempting to influence an officer or employee of any Federal agency, a Member of Congress, an officer or employee of Congress, or an employee of a Member of Congress in connection with this Federal contract, grant, loan, or cooperative agreement, the undersigned shall complete and submit Standard Form-LLL, "Disclosure Form to Report Lobbying," in accordance with its instructions.
2. This certification is a material representation of fact upon which reliance was placed when this transaction was made or entered into. Submission of this certification is a prerequisite for making or entering into this transaction imposed by 31 U.S.C. 1352. Any person who fails to file the required certification shall be subject to a civil penalty of not less than $10,000 and not more than $100,000 for each such failure.
3. The prospective participant also agrees by submitting its bid or proposal that the participant shall require that the language of this certification be included in all lower tier subcontracts, which exceed $100,000 and that all such recipients shall certify and disclose accordingly.

STANDARD SPECIAL PROVISION

ON-THE-JOB TRAINING

(10-16-07) (Rev. 7-21-09) Z-10

Description

The North Carolina Department of Transportation will administer a custom version of the Federal On-the-Job Training (OJT) Program, commonly referred to as the Alternate OJT Program. All contractors (existing and newcomers) will be automatically placed in the Alternate Program. Standard OJT requirements typically associated with individual projects will no longer be applied at the project level. Instead, these requirements will be applicable on an annual basis for each contractor administered by the OJT Program Manager.

On the Job Training shall meet the requirements of 23 CFR 230.107 (b), 23 USC – Section 140, this provision and the On-the-Job Training Program Manual.

The Alternate OJT Program will allow a contractor to train employees on Federal, State and privately funded projects located in North Carolina. However, priority shall be given to training employees on NCDOT Federal-Aid funded projects.

Minorities and Women

Developing, training and upgrading of minorities and women toward journeyman level status is a primary objective of this special training provision. Accordingly, the Contractor shall make every effort to enroll minority and women as trainees to the extent that such persons are available within a reasonable area of recruitment. This training commitment is not intended, and shall not be used, to discriminate against any applicant for training, whether a member of a minority group or not.

Assigning Training Goals

The Department, through the OJT Program Manager, will assign training goals for a calendar year based on the contractors' past three years' activity and the contractors' anticipated upcoming year's activity with the Department. At the beginning of each year, all contractors eligible will be contacted by the Department to determine the number of trainees that will be assigned for the upcoming calendar year. At that time the Contractor shall enter into an agreement with the Department to provide a self-imposed on-the-job training program for the calendar year. This agreement will include a specific number of annual training goals agreed to by both parties. The number of training assignments may range from 1 to 15 per contractor per calendar year. The Contractor shall sign an agreement to fulfill their annual goal for the year. A sample agreement is available at www.ncdot.org/business/ocs/ojt/.

Training Classifications

The Contractor shall provide on-the-job training aimed at developing full journeyman level workers in the construction craft/operator positions. Preference shall be given to providing training in the following skilled work classifications:

Equipment Operators	Office Engineers
Truck Drivers	Estimators
Carpenters	Iron / Reinforcing Steel Workers
Concrete Finishers	Mechanics
Pipe Layers	Welders

The Department has established common training classifications and their respective training requirements that may be used by the contractors. However, the classifications established are not all-inclusive. Where the training is oriented toward construction applications, training will be allowed in lower-level management positions such as office engineers and estimators. Contractors shall submit new classifications for specific job functions that their employees are performing. The Department will review and recommend for acceptance to FHWA the new classifications proposed by contractors, if applicable. New classifications shall meet the following requirements:

Proposed training classifications are reasonable and realistic based on the job skill classification needs, and

The number of training hours specified in the training classification is consistent with common practices and provides enough time for the trainee to obtain journeyman level status.

The Contractor may allow trainees to be trained by a subcontractor provided that the Contractor retains primary responsibility for meeting the training and this provision is made applicable to the subcontract. However, only the Contractor will receive credit towards the annual goal for the trainee.

Where feasible, 25 percent of apprentices or trainees in each occupation shall be in their first year of apprenticeship or training. The number of trainees shall be distributed among the work classifications on the basis of the contractor's needs and the availability of journeymen in the various classifications within a reasonable area of recruitment.

No employee shall be employed as a trainee in any classification in which they have successfully completed a training course leading to journeyman level status or in which they have been employed as a journeyman.

Records and Reports

The Contractor shall maintain enrollment, monthly and completion reports documenting company compliance under these contract documents. These documents and any other information as requested shall be submitted to the OJT Program Manager.

Upon completion and graduation of the program, the Contractor shall provide each trainee with a certification Certificate showing the type and length of training satisfactorily completed.

Trainee Interviews

All trainees enrolled in the program will receive an initial and Trainee/Post graduate interview conducted by the OJT program staff.

Trainee Wages

Contractors shall compensate trainees on a graduating pay scale based upon a percentage of the prevailing minimum journeyman wages (Davis-Bacon Act). Minimum pay shall be as follows:

60 percent	of the journeyman wage for the first half of the training period
75 percent	of the journeyman wage for the third quarter of the training period
90 percent	of the journeyman wage for the last quarter of the training period

In no instance shall a trainee be paid less than the local minimum wage. The Contractor shall adhere to the minimum hourly wage rate that will satisfy both the NC Department of Labor (NCDOL) and the Department.

Achieving or Failing to Meet Training Goals

The Contractor will be credited for each trainee employed by him on the contract work who is currently enrolled or becomes enrolled in an approved program and who receives training for at least 50 percent of the specific program requirement. Trainees will be allowed to be transferred between projects if required by the Contractor's scheduled workload to meet training goals.

If a contractor fails to attain their training assignments for the calendar year, they may be taken off the NCDOT's Bidders List.

Measurement and Payment

No compensation will be made for providing required training in accordance with these contract documents.

STANDARD SPECIAL PROVISION
MINIMUM WAGES
GENERAL DECISION NC130096 01/04/2013 NC96

Z-96

Date: January 4, 2013

General Decision Number: NC130096 01/04/13 NC96

Superseded General Decision Numbers: NC20120096

State: North Carolina

Construction Type: HIGHWAY

COUNTIES:

Bladen	Lee	Robeson
Cleveland	Lenoir	Rowan
Columbus	Lincoln	Sampson
Davidson	Montgomery	Scotland
Duplin	Moore	Stanly
Harnett	Richmond	Wilson
Iredell		

HIGHWAY CONSTRUCTION PROJECTS (excluding tunnels, building structures in rest area projects, railroad construction, bascule, suspension and spandrel arch bridges designed for commercial navigation, bridges involving marine construction, and other major bridges).

Modification Number	Publication Date
0	01/04/2013

SUNC2011-077 09/16/2011

	Rates	Fringes
CARPENTER (Form Work Only)	13.30	
CEMENT MASON/CONCRETE FINISHER	14.18	
INSTALLER (Guardrail) (includes Guiderail/Post Driver Work)	11.76	
IRONWORKER (Reinforcing)	13.90	
LABORER		
Asphalt, Asphalt Distributor, Raker, and Spreader	12.81	
Common or General		
Davidson County	10.64	
Harnett County	10.41	
Iredell County	10.38	
Lenoir County	9.98	
Remaining Counties	10.27	
Richmond County	10.46	
Robeson County	10.07	
Rowan County	10.25	
Stanly County	9.03	
Concrete Saw	11.56	
Landscape	9.90	
Luteman	12.68	
Mason Tender (Cement/Concrete)	10.53	
Pipelayer		
Remaining Counties	11.79	
Stanly County	12.25	
Traffic Control (Flagger)	10.31	
POWER EQUIPMENT OPERATORS		
Backhoe/Excavator/Trackhoe	14.64	
Broom/Sweeper	12.29	
Bulldozer	15.32	
Crane	19.10	
Grader/Blade	19.29	
Loader	13.93	
Mechanic	15.92	
Milling Machine		
Columbus, Davidson, Duplin, Lenoir, Lincoln, Moore, Richmond, and Stanly Counties	14.09	
Remaining Counties	13.80	
Oiler	14.19	
Paver	14.10	
Roller	12.83	
Scraper	12.29	
Screed	14.75	
Tractor	13.92	
TRUCK DRIVER		
Dump Truck		
Davidson County	12.61	
Remaining Counties	11.80	
Lowboy Truck	15.99	
Single Axle Truck	12.07	
Water Truck	13.82	

Welders – Receive rate prescribed for craft performing operation to which welding is incidental.

Unlisted classifications needed for work not included within the scope of the classifications listed may be added after award only as provided in the labor standards contract clauses (29 CFR 5.5(a)(1)(ii)).

The body of each wage determination lists the classification and wage rates that have been found to be prevailing for the cited type(s) of construction in the area covered by the wage determination. The classifications are listed in alphabetical order of "identifiers" that indicate whether the particular rate is union or non-union.

Union Identifiers

An identifier enclosed in dotted lines beginning with characters other than "SU" denotes that the union classification and rate have found to be prevailing for that classification. Example: PLUM0198-005 07/01/2011. The first four letters , PLUM, indicate the international union and the four-digit number, 0198, that follows indicates the local union number or district council number where applicable, i.e., Plumbers Local 0198. The next number, 005 in the example, is an internal number used in processing the wage determination. The date, 07/01/2011, following these characters is the effective date of the most current negotiated rate/collective bargaining agreement which would be July 1, 2011 in the above example.

Union prevailing wage rates will be updated to reflect any changes in the collective bargaining agreements governing the rates.

0000/9999: weighted union wage rates will be published annually each January.

Non-Union Identifiers

Classifications listed under an "SU" identifier were derived from survey data by computing average rates and are not union rates; however, the data used in computing these rates may include both union and non-union data. Example: SULA2004-007 5/13/2010. SU indicates the rates are not union rates, LA indicates the State of Louisiana; 2004 is the year of the survey; and 007 is an internal number used in producing the wage determination. A 1993 or later date, 5/13/2010, indicates the classifications and rates under that identifier were issued as a General Wage Determination on that date.

Survey wage rates will remain in effect and will not change until a new survey is conducted.

WAGE DETERMINATION APPEALS PROCESS

1.) Has there been an initial decision in the matter? This can be:

* an existing published wage determination
* a survey underlying a wage determination
* a Wage and Hour Division letter setting forth a position on a wage determination matter
* a conformance (additional classification and rate) ruling

On survey related matters, initial contact, including requests for summaries of surveys, should be with the Wage and Hour Regional Office for the area in which the survey was conducted because those Regional Offices have responsibility for the Davis-Bacon survey program. If the response from this initial contact is not satisfactory, then the process described in 2.) and 3.) should be followed.

With regard to any other matter not yet ripe for the formal process described here, initial contact should be with the Branch of Construction Wage Determinations. Write to:

Branch of Construction Wage Determinations
Wage and Hour Division
U. S. Department of Labor
200 Constitution Avenue, N.W.
Washington, D.C. 20210

2.) If the answer to the question in 1.) is yes, then an interested party (those affected by the action) can request review and reconsideration from the Wage and Hour Administrator (See 29 CFR Part 1.8 and 29 CFR Part 7). Write to:

Wage and Hour Administrator
U.S. Department of Labor
200 Constitution Avenue, N.W.
Washington, D.C. 20210

The request should be accompanied by a full statement of the interested party's position and by any information (wage payment data, project description, area practice material, etc.) that the requestor considers relevant to the issue.

3.) If the decision of the Administrator is not favorable, an interested party may appeal directly to the Administrative Review Board (formerly the Wage Appeals Board). Write to:

Administrative Review Board
U.S. Department of Labor
200 Constitution Avenue, N.W.
Washington, D.C. 20210

4.) All decisions by the Administrative Review Board are final.

END OF GENERAL DECISION

County : Rowan

Line #	Item Number	Sec #	Description	Quantity	Unit Cost	Amount
			ROADWAY ITEMS			
0001	0000100000-N	800	MOBILIZATION	Lump Sum	L.S.	
0002	0000400000-N	801	CONSTRUCTION SURVEYING	Lump Sum	L.S.	
0003	0001000000-E	200	CLEARING & GRUBBING .. ACRE(S)	Lump Sum	L.S.	
0004	0008000000-E	200	SUPPLEMENTARY CLEARING & GRUBBING	2 ACR		
0005	0015000000-N	205	SEALING ABANDONED WELLS	1 EA		
0006	0022000000-E	225	UNCLASSIFIED EXCAVATION	21,400 CY		
0007	0029000000-N	SP	REINFORCED BRIDGE APPROACH FILL, STATION ********** (45+02.23 -Y2-)	Lump Sum	L.S.	
0008	0036000000-E	225	UNDERCUT EXCAVATION	16,240 CY		
0009	0106000000-E	230	BORROW EXCAVATION	229,600 CY		
0010	0134000000-E	240	DRAINAGE DITCH EXCAVATION	1,010 CY		
0011	0156000000-E	250	REMOVAL OF EXISTING ASPHALT PAVEMENT	7,490 SY		
0012	0177000000-E	250	BREAKING OF EXISTING ASPHALT PAVEMENT	2,680 SY		
0013	0192000000-N	260	PROOF ROLLING	7 HR		
0014	0195000000-E	265	SELECT GRANULAR MATERIAL	13,110 CY		
0015	0196000000-E	270	GEOTEXTILE FOR SOIL STABILIZATION	22,760 SY		
0016	0199000000-E	SP	TEMPORARY SHORING	285 SF		
0017	0225000000-E	SP	REINFORCED SOIL SLOPES	1,350 SY		
0018	0255000000-E	SP	GENERIC GRADING ITEM HAULING AND DISPOSAL OF PETROLEUM CONTAMINATED SOIL	100 TON		

Line #	Item Number	Sec #	Description	Quantity	Unit Cost	Amount
0019	0318000000-E	300	FOUNDATION CONDITIONING MATERIAL, MINOR STRUCTURES	550 TON		
0020	0320000000-E	300	FOUNDATION CONDITIONING GEOTEXTILE	1,620 SY		
0021	0335200000-E	305	15" DRAINAGE PIPE	1,676 LF		
0022	0335300000-E	305	18" DRAINAGE PIPE	52 LF		
0023	0335400000-E	305	24" DRAINAGE PIPE	88 LF		
0024	0335500000-E	305	30" DRAINAGE PIPE	72 LF		
0025	0335850000-E	305	*** DRAINAGE PIPE ELBOWS (15")	12 EA		
0026	0366000000-E	310	15" RC PIPE CULVERTS, CLASS III	324 LF		
0027	0372000000-E	310	18" RC PIPE CULVERTS, CLASS III	176 LF		
0028	0378000000-E	310	24" RC PIPE CULVERTS, CLASS III	40 LF		
0029	0384000000-E	310	30" RC PIPE CULVERTS, CLASS III	76 LF		
0030	0390000000-E	310	36" RC PIPE CULVERTS, CLASS III	88 LF		
0031	0448000000-E	310	**** RC PIPE CULVERTS, CLASS IV (54")	196 LF		
0032	0448200000-E	310	15" RC PIPE CULVERTS, CLASS IV	1,164 LF		
0033	0448300000-E	310	18" RC PIPE CULVERTS, CLASS IV	540 LF		
0034	0448400000-E	310	24" RC PIPE CULVERTS, CLASS IV	340 LF		
0035	0588000000-E	310	18" CS PIPE CULVERTS, 0.064" THICK	32 LF		

Line #	Item Number	Sec #	Description	Quantity	Unit Cost	Amount
0036	0636000000-E	310	**" CS PIPE ELBOWS, *****" THICK (18", 0.064" THICK)	1 EA		
0037	0995000000-E	340	PIPE REMOVAL	1,684 LF		
0038	0996000000-N	350	PIPE CLEAN-OUT	1 EA		
0039	1000000000-E	462	6" SLOPE PROTECTION	41 SY		
0040	1011000000-N	500	FINE GRADING	Lump Sum	L.S.	
0041	1220000000-E	545	INCIDENTAL STONE BASE	200 TON		
0042	1330000000-E	607	INCIDENTAL MILLING	1,230 SY		
0043	1489000000-E	610	ASPHALT CONC BASE COURSE, TYPE B25.0B	12,100 TON		
0044	1498000000-E	610	ASPHALT CONC INTERMEDIATE COURSE, TYPE I19.0B	6,550 TON		
0045	1519000000-E	610	ASPHALT CONC SURFACE COURSE, TYPE S9.5B	9,800 TON		
0046	1575000000-E	620	ASPHALT BINDER FOR PLANT MIX	1,435 TON		
0047	1693000000-E	654	ASPHALT PLANT MIX, PAVEMENT REPAIR	20 TON		
0048	2000000000-N	806	RIGHT OF WAY MARKERS	134 EA		
0049	2022000000-E	815	SUBDRAIN EXCAVATION	168 CY		
0050	2033000000-E	815	SUBDRAIN FINE AGGREGATE	84 CY		
0051	2044000000-E	815	6" PERFORATED SUBDRAIN PIPE	500 LF		
0052	2070000000-N	815	SUBDRAIN PIPE OUTLET	1 EA		
0053	2077000000-E	815	6" OUTLET PIPE	6 LF		
0054	2209000000-E	838	ENDWALLS	3.4 CY		

Line #	Item Number	Sec #	Description	Quantity	Unit Cost	Amount
0055	2220000000-E	838	REINFORCED ENDWALLS	6 CY		
0056	2286000000-N	840	MASONRY DRAINAGE STRUCTURES	51 EA		
0057	2308000000-E	840	MASONRY DRAINAGE STRUCTURES	62.9 LF		
0058	2364000000-N	840	FRAME WITH TWO GRATES, STD 840.16	3 EA		
0059	2365000000-N	840	FRAME WITH TWO GRATES, STD 840.22	1 EA		
0060	2366000000-N	840	FRAME WITH TWO GRATES, STD 840.24	1 EA		
0061	2367000000-N	840	FRAME WITH TWO GRATES, STD 840.29	19 EA		
0062	2374000000-N	840	FRAME WITH GRATE & HOOD, STD 840.03, TYPE ** (E)	5 EA		
0063	2374000000-N	840	FRAME WITH GRATE & HOOD, STD 840.03, TYPE ** (F)	8 EA		
0064	2374000000-N	840	FRAME WITH GRATE & HOOD, STD 840.03, TYPE ** (G)	9 EA		
0065	2396000000-N	840	FRAME WITH COVER, STD 840.54	5 EA		
0066	2549000000-E	846	2'-6" CONCRETE CURB & GUTTER	4,240 LF		
0067	2556000000-E	846	SHOULDER BERM GUTTER	1,988 LF		
0068	2577000000-E	846	CONCRETE EXPRESSWAY GUTTER	545 LF		
0069	2605000000-N	848	CONCRETE CURB RAMP	10 EA		
0070	2612000000-E	848	6" CONCRETE DRIVEWAY	340 SY		
0071	2619000000-E	850	4" CONCRETE PAVED DITCH	30 SY		
0072	2647000000-E	852	5" MONOLITHIC CONCRETE ISLANDS (SURFACE MOUNTED)	195 SY		

Line #	Item Number	Sec #	Description	Quantity	Unit Cost	Amount
0073	2724000000-E	857	PRECAST REINFORCED CONCRETE BARRIER, SINGLE FACED	45 LF		
0074	2830000000-N	858	ADJUSTMENT OF MANHOLES	16 EA		
0075	2845000000-N	858	ADJUSTMENT OF METER BOXES OR VALVE BOXES	18 EA		
0076	3030000000-E	862	STEEL BM GUARDRAIL	4,025 LF		
0077	3045000000-E	862	STEEL BM GUARDRAIL, SHOP CURVED	325 LF		
0078	3105000000-N	862	STEEL BM GUARDRAIL TERMINAL SECTIONS	6 EA		
0079	3150000000-N	862	ADDITIONAL GUARDRAIL POSTS	10 EA		
0080	3195000000-N	862	GUARDRAIL ANCHOR UNITS, TYPE AT-1	1 EA		
0081	3215000000-N	862	GUARDRAIL ANCHOR UNITS, TYPE III	4 EA		
0082	3270000000-N	SP	GUARDRAIL ANCHOR UNITS, TYPE 350	6 EA		
0083	3317000000-N	862	GUARDRAIL ANCHOR UNITS, TYPE B-77	1 EA		
0084	3628000000-E	876	RIP RAP, CLASS I	170 TON		
0085	3649000000-E	876	RIP RAP, CLASS B	820 TON		
0086	3656000000-E	876	GEOTEXTILE FOR DRAINAGE	6,250 SY		
0087	4025000000-E	901	CONTRACTOR FURNISHED, TYPE *** SIGN (D)	54 SF		
0088	4025000000-E	901	CONTRACTOR FURNISHED, TYPE *** SIGN (E)	102 SF		
0089	4025000000-E	901	CONTRACTOR FURNISHED, TYPE *** SIGN (F)	107 SF		

Line #	Item Number	Sec #	Description	Quantity	Unit Cost	Amount
0090	4072000000-E	903	SUPPORTS, 3-LB STEEL U-CHANNEL	590 LF		
0091	4096000000-N	904	SIGN ERECTION, TYPE D	3 EA		
0092	4102000000-N	904	SIGN ERECTION, TYPE E	19 EA		
0093	4108000000-N	904	SIGN ERECTION, TYPE F	9 EA		
0094	4155000000-N	907	DISPOSAL OF SIGN SYSTEM, U-CHANNEL	25 EA		
0095	4400000000-E	1110	WORK ZONE SIGNS (STATIONARY)	329 SF		
0096	4405000000-E	1110	WORK ZONE SIGNS (PORTABLE)	288 SF		
0097	4410000000-E	1110	WORK ZONE SIGNS (BARRICADE MOUNTED)	162 SF		
0098	4415000000-N	1115	FLASHING ARROW BOARD	1 EA		
0099	4420000000-N	1120	PORTABLE CHANGEABLE MESSAGE SIGN	1 EA		
0100	4430000000-N	1130	DRUMS	100 EA		
0101	4435000000-N	1135	CONES	80 EA		
0102	4445000000-E	1145	BARRICADES (TYPE III)	264 LF		
0103	4455000000-N	1150	FLAGGER	360 DAY		
0104	4465000000-N	1160	TEMPORARY CRASH CUSHIONS	1 EA		
0105	4480000000-N	1165	TMA	1 EA		
0106	4485000000-E	1170	PORTABLE CONCRETE BARRIER	150 LF		
0107	4650000000-N	1251	TEMPORARY RAISED PAVEMENT MARKERS	200 EA		
0108	4685000000-E	1205	THERMOPLASTIC PAVEMENT MARKING LINES (4", 90 MILS)	18,298 LF		

Line #	Item Number	Sec #	Description	Quantity	Unit Cost	Amount
0109	4686000000-E	1205	THERMOPLASTIC PAVEMENT MARKING LINES (4", 120 MILS)	31,910 LF		
0110	4695000000-E	1205	THERMOPLASTIC PAVEMENT MARKING LINES (8", 90 MILS)	100 LF		
0111	4710000000-E	1205	THERMOPLASTIC PAVEMENT MARKING LINES (24", 120 MILS)	284 LF		
0112	4721000000-E	1205	THERMOPLASTIC PAVEMENT MARKING CHARACTER (120 MILS)	3 EA		
0113	4725000000-E	1205	THERMOPLASTIC PAVEMENT MARKING SYMBOL (90 MILS)	54 EA		
0114	4770000000-E	1205	COLD APPLIED PLASTIC PAVEMENT MARKING LINES, TYPE ** (4") (II)	1,744 LF		
0115	4810000000-E	1205	PAINT PAVEMENT MARKING LINES (4")	18,391 LF		
0116	4845000000-N	1205	PAINT PAVEMENT MARKING SYMBOL	25 EA		
0117	4850000000-E	1205	REMOVAL OF PAVEMENT MARKING LINES (4")	1,606 LF		
0118	4875000000-N	1205	REMOVAL OF PAVEMENT MARKING SYMBOLS & CHARACTERS	3 EA		
0119	4900000000-N	1251	PERMANENT RAISED PAVEMENT MARKERS	313 EA		
0120	5326200000-E	1510	12" WATER LINE	65 LF		
0121	5648000000-N	1515	RELOCATE WATER METER	2 EA		
0122	5672000000-N	1515	RELOCATE FIRE HYDRANT	7 EA		
0123	5709200000-E	1520	4" FORCE MAIN SEWER	75 LF		
0124	5798000000-E	1530	ABANDON "*" UTILITY PIPE (4")	64 LF		
0125	5804000000-E	1530	ABANDON 12" UTILITY PIPE	695 LF		
0126	6000000000-E	1605	TEMPORARY SILT FENCE	20,000 LF		

Line #	Item Number	Sec #	Description	Quantity	Unit Cost	Amount
0127	6006000000-E	1610	STONE FOR EROSION CONTROL, CLASS A	2,200 TON		
0128	6009000000-E	1610	STONE FOR EROSION CONTROL, CLASS B	7,200 TON		
0129	6012000000-E	1610	SEDIMENT CONTROL STONE	3,500 TON		
0130	6015000000-E	1615	TEMPORARY MULCHING	50 ACR		
0131	6018000000-E	1620	SEED FOR TEMPORARY SEEDING	1,400 LB		
0132	6021000000-E	1620	FERTILIZER FOR TEMPORARY SEEDING	6.25 TON		
0133	6024000000-E	1622	TEMPORARY SLOPE DRAINS	2,000 LF		
0134	6029000000-E	SP	SAFETY FENCE	200 LF		
0135	6030000000-E	1630	SILT EXCAVATION	14,150 CY		
0136	6036000000-E	1631	MATTING FOR EROSION CONTROL	35,390 SY		
0137	6037000000-E	SP	COIR FIBER MAT	100 SY		
0138	6038000000-E	SP	PERMANENT SOIL REINFORCEMENT MAT	2,810 SY		
0139	6042000000-E	1632	1/4" HARDWARE CLOTH	3,500 LF		
0140	6070000000-N	1639	SPECIAL STILLING BASINS	2 EA		
0141	6071010000-E	SP	WATTLE	1,800 LF		
0142	6071020000-E	SP	POLYACRYLAMIDE (PAM)	1,400 LB		
0143	6071030000-E	1640	COIR FIBER BAFFLE	5,000 LF		
0144	6071050000-E	SP	*** SKIMMER (1-1/2")	7 EA		
0145	6071050000-E	SP	*** SKIMMER (2")	1 EA		

Line #	Item Number	Sec #	Description	Quantity	Unit Cost	Amount
0146	6084000000-E	1660	SEEDING & MULCHING	50 ACR		
0147	6087000000-E	1660	MOWING	25 ACR		
0148	6090000000-E	1661	SEED FOR REPAIR SEEDING	600 LB		
0149	6093000000-E	1661	FERTILIZER FOR REPAIR SEEDING	2 TON		
0150	6096000000-E	1662	SEED FOR SUPPLEMENTAL SEEDING	1,250 LB		
0151	6108000000-E	1665	FERTILIZER TOPDRESSING	37 TON		
0152	6111000000-E	SP	IMPERVIOUS DIKE	60 LF		
0153	6114500000-N	1667	SPECIALIZED HAND MOWING	10 MHR		
0154	6117000000-N	SP	RESPONSE FOR EROSION CONTROL	100 EA		
0155	7060000000-E	1705	SIGNAL CABLE	1,350 LF		
0156	7120000000-E	1705	VEHICLE SIGNAL HEAD (12", 3 SECTION)	8 EA		
0157	7132000000-E	1705	VEHICLE SIGNAL HEAD (12", 4 SECTION)	2 EA		
0158	7144000000-E	1705	VEHICLE SIGNAL HEAD (12", 5 SECTION)	4 EA		
0159	7264000000-E	1710	MESSENGER CABLE (3/8")	750 LF		
0160	7300000000-E	1715	UNPAVED TRENCHING (**********) (1, 2")	1,550 LF		
0161	7301000000-E	1715	DIRECTIONAL DRILL (**********) (1, 2")	150 LF		
0162	7324000000-N	1716	JUNCTION BOX (STANDARD SIZE)	16 EA		
0163	7360000000-N	1720	WOOD POLE	8 EA		
0164	7372000000-N	1721	GUY ASSEMBLY	16 EA		

Line #	Item Number	Sec #	Description	Quantity	Unit Cost	Amount
0165	7408000000-E	1722	1" RISER WITH WEATHERHEAD	2 EA		
0166	7420000000-E	1722	2" RISER WITH WEATHERHEAD	8 EA		
0167	7444000000-E	1725	INDUCTIVE LOOP SAWCUT	1,450 LF		
0168	7456000000-E	1726	LEAD-IN CABLE (**********) (14-2)	5,400 LF		
0169	7575142000-N	1736	900MHZ RADIO	2 EA		
0170	7684000000-N	1750	SIGNAL CABINET FOUNDATION	2 EA		
0171	7756000000-N	1751	CONTROLLER WITH CABINET (TYPE 2070L, BASE MOUNTED)	2 EA		
0172	7780000000-N	1751	DETECTOR CARD (TYPE 2070L)	10 EA		
0173	7901000000-N	1753	CABINET BASE EXTENDER	2 EA		
0174	7948000000-N	1757	TRAFFIC SIGNAL REMOVAL	1 EA		

STRUCTURE ITEMS

Line #	Item Number	Sec #	Description	Quantity	Unit Cost	Amount
0175	8070000000-E	410	FOUNDATION EXCAVATION	466 CY		
0176	8121000000-N	412	UNCLASSIFIED STRUCTURE EXCAVATION AT STATION ******** (45+02.23-Y2-)	Lump Sum	L.S.	
0177	8147000000-E	420	REINFORCED CONCRETE DECK SLAB	14,136 SF		
0178	8161000000-E	420	GROOVING BRIDGE FLOORS	13,196 SF		
0179	8182000000-E	420	CLASS A CONCRETE (BRIDGE)	321.9 CY		
0180	8210000000-N	422	BRIDGE APPROACH SLABS, STATION ********** (45+02.23-Y2-)	Lump Sum	L.S.	
0181	8217000000-E	425	REINFORCING STEEL (BRIDGE)	51,893 LB		

Line #	Item Number	Sec #	Description	Quantity	Unit Cost	Amount
0182	8238000000-E	425	SPIRAL COLUMN REINFORCING STEEL (BRIDGE)	3,975 LB		
0183	8274000000-E	430	MODIFIED 63" PRESTRESSED CONC GIRDERS	633.13 LF		
0184	8277000000-E	430	MODIFIED 72" PRESTRESSED CONC GIRDERS	989.79 LF		
0185	8364000000-E	450	HP12X53 STEEL PILES	8,115 LF		
0186	8475000000-E	460	TWO BAR METAL RAIL	801.34 LF		
0187	8517000000-E	460	1'-**"X *****" CONCRETE PARA-PET (1'-2" X 2'-6")	817.53 LF		
0188	8531000000-E	462	4" SLOPE PROTECTION	446 SY		
0189	8657000000-N	430	ELASTOMERIC BEARINGS	Lump Sum	L.S.	
0190	8692000000-N	SP	FOAM JOINT SEALS	Lump Sum	L.S.	

Vendor 1 of 8: TRIANGLE GRADING & PAVING INC (3752)
Call Order 010 (Proposal: C203143)

Bid Information

County: ROWAN
Address: P.O. Drawer 2570
Burlington , NC , 27216
Signature Check: R_G_Kirkpatrick_Jr_3752
Time Bid Received: March 19, 2013 01:48 PM
Amendment Count: 0

Bid Checksum: DFBB73D2
Bid Total: $9,327,385.16
Items Total: $9,327,385.16
Time Total: $0.00

Bidding Errors:
None.

DBE GOAL SET 10.0

DBE GOAL MET 10.0

Vendor 1 of 8: TRIANGLE GRADING & PAVING INC (3752)
Call Order 010 (Proposal: C203143)

Bid Bond Information

Projects:		**Bond Maximum:**	
Counties:		**State of Incorporation:**	
Bond ID:	3FQM-BPET-4E1P-RRPU	**Agency Execution Date:**	3/19/2013
Paid by Check:	No	**Surety Name:**	SurePathNetwork
Bond Percent:	5%	**Bond Agency Name:**	Liberty Mutual Insurance Company

Vendor 3752's Bid Information for Call 010, Letting L130319, 03/19/13

Triangle Grading and Paving, Inc (3752)
Call Order 010 (Proposal ID C203143)

LIST OF DBE PARTICIPANTS

VENDOR NUMBER	DBE NAME / ADDRESS	WORK CODE	TYPE OF WORK	CERT TYPE	AMOUNT	
11572 MB	CRUZ BROTHERS CONCRETE, INC. 1572 PAYNE ROAD/LOT 75 LOT 75 , GRAHAM, NC 27253			Sub	121,830.00	Committed
3080 WB	CURTIN TRUCKING & DRAINAGE, INC POST OFFICE BOX 38220 , CHARLOTTE, NC 282781003			Sub	13,700.00	Committed
3376 WB	REYNOLDS FENCE & GUARDRAIL INC 9320 MACHADO DRIVE , INDIAN TRAIL, NC 28079			Sub	83,046.25	Committed
3765 WB	STAY ALERT SAFETY SERVICES INC POST OFFICE BOX 467 , KERNERSVILLE, NC 27285			Sub	14,420.70	Committed
3026 WB	KNOX CONTRACT SEEDING CO., INC. 550 KNOX ROAD , CLEVELAND, NC 27013			Sub	354,350.00	Committed
3230 WB	HIATT & MASON ENTERPRISES, INC POST OFFICE BOX 1378 , MOUNT AIRY, NC 27030			Sub	144,400.14	Committed
2855 WB	BOSS CONSTRUCTION CO., INC. 229 BOXWOOD CHURCH ROAD , MOCKSVILLE, NC 27028			Sub	28,204.79	Committed
4906 MB	W. G. LEWIS TRUCKING, INC 1323 PENNY RD. , HIGH POINT, NC 27265			Sub	99,575.00	Committed
7072 WB	BOONE MASONRY, INC. NEALWOOD AVENUE , GRAHAM, NC 27253			Sub	78,285.00	Committed
				TOTAL:	$937,811.88 10.05%	

Vendor 3752's Bid Information for Call 010, Letting L130319, 03/19/13

Triangle Grading and Paving, Inc (3752)
Call Order 010 (Proposal ID C203143)

Miscelleneous Data Info - Contractor Responses:
==========

NON-COLLUSION AND DEBARMENT CERTIFICATION

Explanation of the prospective bidder that is unable to certify to any of the statements in this certification:

Explanation:
NOT ANSWERED
NOT ANSWERED
NOT ANSWERED
NOT ANSWERED

AWARD LIMITS ON MULTIPLE PROJECTS

By answering YES to this statement, the bidder acknowleges that they are using the award limits on multiple projects. No

It is the desire of the Bidder to be awarded contracts, the value of which will not exceed a total of NOT ANSWERED for those projects indicated herein, for which bids will be opened on (MM/DD/YY)

The Award Limits shall apply to the following projects:

Contract Number	County
NOT ANSWERED	
NOT ANSWERED	
NOT ANSWERED	
NOT ANSWERED	
NOT ANSWERED	
NOT ANSWERED	

Bid Bond Data Info - Contractor Responses:

```
                BondID: 3FQM-BPET-4E1P-RRPU
Surety Registry Agency: SurePathNetwork
             Verified?: Yes
          Surety Agency: Liberty Mutual Insurance Company
   Bond Execution Date: 3/19/2013
           Bond Amount:     $466,369.26 (Five Percent of Bid)
```

Contract ID: C203143 Project(s): FRA-FR-HSR-0006-10-01-
Letting Date: 03-19-13 Call Order: 010
Bidder: 3752 - Triangle Grading and Paving, Inc

Line No.	Item Description	Approx. Quantity and Units	Unit Price Dollars	Unit Price Cts	Bid Amount Dollars	Bid Amount Ct
Section 0001	ROADWAY ITEMS					
	Alt Group					
0001	0000100000-N MOBILIZATION	LUMP	LUMP		450,000.00	
0002	0000400000-N CONSTRUCTION SURVEYING	LUMP	LUMP		60,000.00	
0003	0001000000-E CLEARING & GRUBBING .. ACRE(S)	LUMP	LUMP		850,000.00	
0004	0008000000-E SUPPLEMENTARY CLEARING & GRUB-BING	2.000 ACR	3,500.00000		7,000.00	
0005	0015000000-N SEALING ABANDONED WELLS	1.000 EA	2,000.00000		2,000.00	
0006	0022000000-E UNCLASSIFIED EXCAVATION	21,400.000 CY	6.00000		128,400.00	
0007	0029000000-N REINFORCED BRIDGE APPROACH FILL, STATION ********** (45+02.23 -Y2-)	LUMP	LUMP		25,000.00	
0008	0036000000-E UNDERCUT EXCAVATION	16,240.000 CY	5.50000		89,320.00	
0009	0106000000-E BORROW EXCAVATION	229,600.000 CY	5.75000		1,320,200.00	
0010	0134000000-E DRAINAGE DITCH EXCAVATION	1,010.000 CY	11.00000		11,110.00	

Contract ID: C203143 Project(s): FRA-FR-HSR-0006-10-01-
Letting Date: 03-19-13 Call Order: 010
Bidder: 3752 - Triangle Grading and Paving, Inc

Line No.	Item Description	Approx. Quantity and Units	Unit Price Dollars	Unit Price Cts	Bid Amount Dollars	Bid Amount Ct
0011	0156000000-E REMOVAL OF EXISTING ASPHALT PAVEMENT	7,490.000 SY	4.00000		29,960.00	
0012	0177000000-E BREAKING OF EXISTING ASPHALT PAVEMENT	2,680.000 SY	4.00000		10,720.00	
0013	0192000000-N PROOF ROLLING	7.000 HR	185.00000		1,295.00	
0014	0195000000-E SELECT GRANULAR MATERIAL	13,110.000 CY	20.00000		262,200.00	
0015	0196000000-E GEOTEXTILE FOR SOIL STABILIZA-TION	22,760.000 SY	1.50000		34,140.00	
0016	0199000000-E TEMPORARY SHORING	285.000 SF	85.00000		24,225.00	
0017	0225000000-E REINFORCED SOIL SLOPES	1,350.000 SY	60.00000		81,000.00	
0018	0255000000-E GENERIC GRADING ITEM HAULING AND DISPOSAL OF PETROLEUM CONTAMINATED SOIL	100.000 TON	75.00000		7,500.00	
0019	0318000000-E FOUNDATION CONDITIONING MATE- RIAL, MINOR STRUCTURES	550.000 TON	35.00000		19,250.00	
0020	0320000000-E FOUNDATION CONDITIONING GEO-TEXTILE	1,620.000 SY	2.00000		3,240.00	
0021	0335200000-E 15" DRAINAGE PIPE	1,676.000 LF	32.00000		53,632.00	

Contract ID: C203143 Project(s): FRA-FR-HSR-0006-10-01-
Letting Date: 03-19-13 Call Order: 010
Bidder: 3752 - Triangle Grading and Paving, Inc

Line No.	Item Description	Approx. Quantity and Units	Unit Price Dollars	Unit Price Cts	Bid Amount Dollars	Bid Amount Ct
0022	0335300000-E 18" DRAINAGE PIPE	52.000 LF	36.00000		1,872.00	
0023	0335400000-E 24" DRAINAGE PIPE	88.000 LF	42.00000		3,696.00	
0024	0335500000-E 30" DRAINAGE PIPE	72.000 LF	45.00000		3,240.00	
0025	0335850000-E **" DRAINAGE PIPE ELBOWS (15")	12.000 EA	400.00000		4,800.00	
0026	0366000000-E 15" RC PIPE CULVERTS, CLASS III	324.000 LF	33.00000		10,692.00	
0027	0372000000-E 18" RC PIPE CULVERTS, CLASS III	176.000 LF	36.00000		6,336.00	
0028	0378000000-E 24" RC PIPE CULVERTS, CLASS III	40.000 LF	37.00000		1,480.00	
0029	0384000000-E 30" RC PIPE CULVERTS, CLASS III	76.000 LF	48.00000		3,648.00	
0030	0390000000-E 36" RC PIPE CULVERTS, CLASS III	88.000 LF	78.00000		6,864.00	
0031	0448000000-E ****" RC PIPE CULVERTS, CLASS IV (54")	196.000 LF	160.00000		31,360.00	
0032	0448200000-E 15" RC PIPE CULVERTS, CLASS IV	1,164.000 LF	32.00000		37,248.00	
0033	0448300000-E 18" RC PIPE CULVERTS, CLASS IV	540.000 LF	34.00000		18,360.00	

Contract ID: C203143 Project(s): FRA-FR-HSR-0006-10-01-
Letting Date: 03-19-13 Call Order: 010
Bidder: 3752 - Triangle Grading and Paving, Inc

Line No.	Item Description	Approx. Quantity and Units	Unit Price Dollars	Unit Price Cts	Bid Amount Dollars	Bid Amount Ct
0034	0448400000-E 24" RC PIPE CULVERTS, CLASS IV	340.000 LF	44.00000		14,960.00	
0035	0588000000-E 18" CS PIPE CULVERTS, 0.064" THICK	32.000 LF	33.00000		1,056.00	
0036	0636000000-E **" CS PIPE ELBOWS, *****" THICK (18", 0.064" THICK)	1.000 EA	415.00000		415.00	
0037	0995000000-E PIPE REMOVAL	1,684.000 LF	11.00000		18,524.00	
0038	0996000000-N PIPE CLEAN-OUT	1.000 EA	3,000.00000		3,000.00	
0039	1000000000-E 6" SLOPE PROTECTION	41.000 SY	125.00000		5,125.00	
0040	1011000000-N FINE GRADING	LUMP	LUMP		75,000.00	
0041	1220000000-E INCIDENTAL STONE BASE	200.000 TON	37.00000		7,400.00	
0042	1330000000-E INCIDENTAL MILLING	1,230.000 SY	8.00000		9,840.00	
0043	1489000000-E ASPHALT CONC BASE COURSE, TYPE B25.0B	12,100.000 TON	39.25000		474,925.00	
0044	1498000000-E ASPHALT CONC INTERMEDIATE COURSE, TYPE I19.0B	6,550.000 TON	41.20000		269,860.00	
0045	1519000000-E ASPHALT CONC SURFACE COURSE, TYPE S9.5B	9,800.000 TON	40.50000		396,900.00	

Contract ID: C203143 Project(s): FRA-FR-HSR-0006-10-01-
Letting Date: 03-19-13 Call Order: 010
Bidder: 3752 - Triangle Grading and Paving, Inc

Line No.	Item Description	Approx. Quantity and Units	Unit Price Dollars	Unit Price Cts	Bid Amount Dollars	Bid Amount Ct
0046	1575000000-E ASPHALT BINDER FOR PLANT MIX	1,435.000 TON	563.00000		807,905.00	
0047	1693000000-E ASPHALT PLANT MIX, PAVEMENT REPAIR	20.000 TON	150.00000		3,000.00	
0048	2000000000-N RIGHT OF WAY MARKERS	134.000 EA	150.00000		20,100.00	
0049	2022000000-E SUBDRAIN EXCAVATION	168.000 CY	17.00000		2,856.00	
0050	2033000000-E SUBDRAIN FINE AGGREGATE	84.000 CY	28.00000		2,352.00	
0051	2044000000-E 6" PERFORATED SUBDRAIN PIPE	500.000 LF	8.00000		4,000.00	
0052	2070000000-N SUBDRAIN PIPE OUTLET	1.000 EA	260.00000		260.00	
0053	2077000000-E 6" OUTLET PIPE	6.000 LF	15.00000		90.00	
0054	2209000000-E ENDWALLS	3.400 CY	800.00000		2,720.00	
0055	2220000000-E REINFORCED ENDWALLS	6.000 CY	900.00000		5,400.00	
0056	2286000000-N MASONRY DRAINAGE STRUCTURES	51.000 EA	1,100.00000		56,100.00	
0057	2308000000-E MASONRY DRAINAGE STRUCTURES	62.900 LF	240.00000		15,096.00	

Contract ID: C203143 Project(s): FRA-FR-HSR-0006-10-01-
Letting Date: 03-19-13 Call Order: 010
Bidder: 3752 - Triangle Grading and Paving, Inc

Line No.	Item Description	Approx. Quantity and Units	Unit Price Dollars	Unit Price Cts	Bid Amount Dollars	Bid Amount Ct
0058	2364000000-N FRAME WITH TWO GRATES, STD 840.16	3.000 EA	500.00000		1,500.00	
0059	2365000000-N FRAME WITH TWO GRATES, STD 840.22	1.000 EA	500.00000		500.00	
0060	2366000000-N FRAME WITH TWO GRATES, STD 840.24	1.000 EA	500.00000		500.00	
0061	2367000000-N FRAME WITH TWO GRATES, STD 840.29	19.000 EA	495.00000		9,405.00	
0062	2374000000-N FRAME WITH GRATE & HOOD, STD 840.03, TYPE ** (E)	5.000 EA	500.00000		2,500.00	
0063	2374000000-N FRAME WITH GRATE & HOOD, STD 840.03, TYPE ** (F)	8.000 EA	600.00000		4,800.00	
0064	2374000000-N FRAME WITH GRATE & HOOD, STD 840.03, TYPE ** (G)	9.000 EA	600.00000		5,400.00	
0065	2396000000-N FRAME WITH COVER, STD 840.54	5.000 EA	425.00000		2,125.00	
0066	2549000000-E 2'-6" CONCRETE CURB & GUTTER	4,240.000 LF	12.50000		53,000.00	
0067	2556000000-E SHOULDER BERM GUTTER	1,988.000 LF	12.50000		24,850.00	
0068	2577000000-E CONCRETE EXPRESSWAY GUTTER	545.000 LF	20.00000		10,900.00	
0069	2605000000-N CONCRETE CURB RAMP	10.000 EA	950.00000		9,500.00	

Contract ID: C203143 Project(s): FRA-FR-HSR-0006-10-01-
Letting Date: 03-19-13 Call Order: 010
Bidder: 3752 - Triangle Grading and Paving, Inc

Line No.	Item Description	Approx. Quantity and Units	Unit Price Dollars	Unit Price Cts	Bid Amount Dollars	Bid Amount Ct
0070	2612000000-E 6" CONCRETE DRIVEWAY	340.000 SY	42.00000		14,280.00	
0071	2619000000-E 4" CONCRETE PAVED DITCH	30.000 SY	50.00000		1,500.00	
0072	2647000000-E 5" MONOLITHIC CONCRETE ISLANDS(SURFACE MOUNTED)	195.000 SY	40.00000		7,800.00	
0073	2724000000-E PRECAST REINFORCED CONCRETE BARRIER, SINGLE FACED	45.000 LF	165.00000		7,425.00	
0074	2830000000-N ADJUSTMENT OF MANHOLES	16.000 EA	500.00000		8,000.00	
0075	2845000000-N ADJUSTMENT OF METER BOXES OR VALVE BOXES	18.000 EA	400.00000		7,200.00	
0076	3030000000-E STEEL BM GUARDRAIL	4,025.000 LF	14.80000		59,570.00	
0077	3045000000-E STEEL BM GUARDRAIL, SHOP CURVED	325.000 LF	16.25000		5,281.25	
0078	3105000000-N STEEL BM GUARDRAIL TERMINAL SECTIONS	6.000 EA	75.00000		450.00	
0079	3150000000-N ADDITIONAL GUARDRAIL POSTS	10.000 EA	20.00000		200.00	
0080	3195000000-N GUARDRAIL ANCHOR UNITS, TYPE AT-1	1.000 EA	450.00000		450.00	
0081	3215000000-N GUARDRAIL ANCHOR UNITS, TYPE III	4.000 EA	1,200.00000		4,800.00	

Contract ID: C203143 Project(s): FRA-FR-HSR-0006-10-01-
Letting Date: 03-19-13 Call Order: 010
Bidder: 3752 - Triangle Grading and Paving, Inc

Line No.	Item Description	Approx. Quantity and Units	Unit Price Dollars	Unit Price Cts	Bid Amount Dollars	Bid Amount Ct
0082	3270000000-N GUARDRAIL ANCHOR UNITS, TYPE 350	6.000 EA	1,800.00000		10,800.00	
0083	3317000000-N GUARDRAIL ANCHOR UNITS, TYPE B-77	1.000 EA	1,495.00000		1,495.00	
0084	3628000000-E RIP RAP, CLASS I	170.000 TON	40.00000		6,800.00	
0085	3649000000-E RIP RAP, CLASS B	820.000 TON	40.00000		32,800.00	
0086	3656000000-E GEOTEXTILE FOR DRAINAGE	6,250.000 SY	2.50000		15,625.00	
0087	4025000000-E CONTRACTOR FURNISHED, TYPE ***SIGN (D)	54.000 SF	14.25000		769.50	
0088	4025000000-E CONTRACTOR FURNISHED, TYPE ***SIGN (E)	102.000 SF	12.50000		1,275.00	
0089	4025000000-E CONTRACTOR FURNISHED, TYPE ***SIGN (F)	107.000 SF	12.60000		1,348.20	
0090	4072000000-E SUPPORTS, 3-LB STEEL U-CHANNEL	590.000 LF	4.90000		2,891.00	
0091	4096000000-N SIGN ERECTION, TYPE D	3.000 EA	85.00000		255.00	
0092	4102000000-N SIGN ERECTION, TYPE E	19.000 EA	55.00000		1,045.00	
0093	4108000000-N SIGN ERECTION, TYPE F	9.000 EA	75.00000		675.00	

Contract ID: C203143 Project(s): FRA-FR-HSR-0006-10-01-
Letting Date: 03-19-13 Call Order: 010
Bidder: 3752 - Triangle Grading and Paving, Inc

Line No.	Item Description	Approx. Quantity and Units	Unit Price Dollars	Unit Price Cts	Bid Amount Dollars	Bid Amount Ct
0094	4155000000-N DISPOSAL OF SIGN SYSTEM, U- CHANNEL	25.000 EA	3.00000		75.00	
0095	4400000000-E WORK ZONE SIGNS (STATIONARY)	329.000 SF	4.20000		1,381.80	
0096	4405000000-E WORK ZONE SIGNS (PORTABLE)	288.000 SF	10.63000		3,061.44	
0097	4410000000-E WORK ZONE SIGNS (BARRICADE MOUNTED)	162.000 SF	4.60000		745.20	
0098	4415000000-N FLASHING ARROW BOARD	1.000 EA	7,427.82000		7,427.82	
0099	4420000000-N PORTABLE CHANGEABLE MESSAGE SIGN	1.000 EA	14,000.00000		14,000.00	
0100	4430000000-N DRUMS	100.000 EA	48.00000		4,800.00	
0101	4435000000-N CONES	80.000 EA	13.00000		1,040.00	
0102	4445000000-E BARRICADES (TYPE III)	264.000 LF	15.00000		3,960.00	
0103	4455000000-N FLAGGER	360.000 DAY	22.00000		7,920.00	
0104	4465000000-N TEMPORARY CRASH CUSHIONS	1.000 EA	6,500.00000		6,500.00	
0105	4480000000-N TMA	1.000 EA	14,000.00000		14,000.00	

Contract ID: C203143 Project(s): FRA-FR-HSR-0006-10-01-
Letting Date: 03-19-13 Call Order: 010
Bidder: 3752 - Triangle Grading and Paving, Inc

Line No.	Item Description	Approx. Quantity and Units	Unit Price Dollars	Unit Price Cts	Bid Amount Dollars	Bid Amount Ct
0106	4485000000-E PORTABLE CONCRETE BARRIER	150.000 LF	48.00000		7,200.00	
0107	4650000000-N TEMPORARY RAISED PAVEMENT MARKERS	200.000 EA	5.00000		1,000.00	
0108	4685000000-E THERMOPLASTIC PAVEMENT MARKINGLINES (4", 90 MILS)	18,298.000 LF	0.50000		9,149.00	
0109	4686000000-E THERMOPLASTIC PAVEMENT MARKING LINES (4", 120 MILS)	31,910.000 LF	0.54000		17,231.40	
0110	4695000000-E THERMOPLASTIC PAVEMENT MARKINGLINES (8", 90 MILS)	100.000 LF	3.00000		300.00	
0111	4710000000-E THERMOPLASTIC PAVEMENT MARKINGLINES (24", 120 MILS)	284.000 LF	7.00000		1,988.00	
0112	4721000000-E THERMOPLASTIC PAVEMENT MARKINGCHARACTER (120 MILS)	3.000 EA	100.00000		300.00	
0113	4725000000-E THERMOPLASTIC PAVEMENT MARKINGSYMBOL (90 MILS)	54.000 EA	100.00000		5,400.00	
0114	4770000000-E COLD APPLIED PLASTIC PAVEMENT MARKING LINES, TYPE ** (4") (II)	1,744.000 LF	3.00000		5,232.00	
0115	4810000000-E PAINT PAVEMENT MARKING LINES (4")	18,391.000 LF	0.25000		4,597.75	
0116	4845000000-N PAINT PAVEMENT MARKING SYMBOL	25.000 EA	50.00000		1,250.00	

Contract ID: C203143 Project(s): FRA-FR-HSR-0006-10-01-
Letting Date: 03-19-13 Call Order: 010
Bidder: 3752 - Triangle Grading and Paving, Inc

Line No.	Item Description	Approx. Quantity and Units	Unit Price Dollars	Unit Price Cts	Bid Amount Dollars	Bid Amount Ct
0117	4850000000-E REMOVAL OF PAVEMENT MARKING LINES (4")	1,606.000 LF	1.00000		1,606.00	
0118	4875000000-N REMOVAL OF PAVEMENT MARKING SYMBOLS & CHARACTERS	3.000 EA	60.00000		180.00	
0119	4900000000-N PERMANENT RAISED PAVEMENT MARKERS	313.000 EA	4.50000		1,408.50	
0120	5326200000-E 12" WATER LINE	65.000 LF	95.00000		6,175.00	
0121	5648000000-N RELOCATE WATER METER	2.000 EA	1,442.00000		2,884.00	
0122	5672000000-N RELOCATE FIRE HYDRANT	7.000 EA	3,500.00000		24,500.00	
0123	5709200000-E 4" FORCE MAIN SEWER	75.000 LF	79.00000		5,925.00	
0124	5798000000-E ABANDON **" UTILITY PIPE (4")	64.000 LF	16.00000		1,024.00	
0125	5804000000-E ABANDON 12" UTILITY PIPE	695.000 LF	8.00000		5,560.00	
0126	6000000000-E TEMPORARY SILT FENCE	20,000.000 LF	2.50000		50,000.00	
0127	6006000000-E STONE FOR EROSION CONTROL, CLASS A	2,200.000 TON	40.00000		88,000.00	
0128	6009000000-E STONE FOR EROSION CONTROL, CLASS B	7,200.000 TON	42.00000		302,400.00	

Contract ID: C203143 Project(s): FRA-FR-HSR-0006-10-01-
Letting Date: 03-19-13 Call Order: 010
Bidder: 3752 - Triangle Grading and Paving, Inc

Line No.	Item Description	Approx. Quantity and Units	Unit Price Dollars	Unit Price Cts	Bid Amount Dollars	Bid Amount Ct
0129	6012000000-E SEDIMENT CONTROL STONE	3,500.000 TON	33.00000		115,500.00	
0130	6015000000-E TEMPORARY MULCHING	50.000 ACR	500.00000		25,000.00	
0131	6018000000-E SEED FOR TEMPORARY SEEDING	1,400.000 LB	3.00000		4,200.00	
0132	6021000000-E FERTILIZER FOR TEMPORARY SEED-ING	6.250 TON	950.00000		5,937.50	
0133	6024000000-E TEMPORARY SLOPE DRAINS	2,000.000 LF	11.00000		22,000.00	
0134	6029000000-E SAFETY FENCE	200.000 LF	1.50000		300.00	
0135	6030000000-E SILT EXCAVATION	14,150.000 CY	4.00000		56,600.00	
0136	6036000000-E MATTING FOR EROSION CONTROL	35,390.000 SY	1.50000		53,085.00	
0137	6037000000-E COIR FIBER MAT	100.000 SY	6.00000		600.00	
0138	6038000000-E PERMANENT SOIL REINFORCEMENT MAT	2,810.000 SY	7.00000		19,670.00	
0139	6042000000-E 1/4" HARDWARE CLOTH	3,500.000 LF	3.50000		12,250.00	
0140	6070000000-N SPECIAL STILLING BASINS	2.000 EA	1,000.00000		2,000.00	

Contract ID: C203143 Project(s): FRA-FR-HSR-0006-10-01-
Letting Date: 03-19-13 Call Order: 010
Bidder: 3752 - Triangle Grading and Paving, Inc

Line No.	Item Description	Approx. Quantity and Units	Unit Price Dollars	Unit Price Cts	Bid Amount Dollars	Bid Amount Ct
0141	6071010000-E WATTLE	1,800.000 LF	9.00000		16,200.00	
0142	6071020000-E POLYACRYLAMIDE (PAM)	1,400.000 LB	10.00000		14,000.00	
0143	6071030000-E COIR FIBER BAFFLE	5,000.000 LF	4.50000		22,500.00	
0144	6071050000-E **" SKIMMER (1-1/2")	7.000 EA	800.00000		5,600.00	
0145	6071050000-E **" SKIMMER (2")	1.000 EA	1,200.00000		1,200.00	
0146	6084000000-E SEEDING & MULCHING	50.000 ACR	1,450.00000		72,500.00	
0147	6087000000-E MOWING	25.000 ACR	90.00000		2,250.00	
0148	6090000000-E SEED FOR REPAIR SEEDING	600.000 LB	6.00000		3,600.00	
0149	6093000000-E FERTILIZER FOR REPAIR SEEDING	2.000 TON	950.00000		1,900.00	
0150	6096000000-E SEED FOR SUPPLEMENTAL SEEDING	1,250.000 LB	2.75000		3,437.50	
0151	6108000000-E FERTILIZER TOPDRESSING	37.000 TON	900.00000		33,300.00	
0152	6111000000-E IMPERVIOUS DIKE	60.000 LF	52.00000		3,120.00	

Contract ID: C203143 Project(s): FRA-FR-HSR-0006-10-01-
Letting Date: 03-19-13 Call Order: 010
Bidder: 3752 - Triangle Grading and Paving, Inc

Line No.	Item Description	Approx. Quantity and Units	Unit Price Dollars	Unit Price Cts	Bid Amount Dollars	Bid Amount Ct
0153	6114500000-N SPECIALIZED HAND MOWING	10.000 MHR	50.00000		500.00	
0154	6117000000-N RESPONSE FOR EROSION CONTROL	100.000 EA	100.00000		10,000.00	
0155	7060000000-E SIGNAL CABLE	1,350.000 LF	2.00000		2,700.00	
0156	7120000000-E VEHICLE SIGNAL HEAD (12", 3 SECTION)	8.000 EA	750.00000		6,000.00	
0157	7132000000-E VEHICLE SIGNAL HEAD (12", 4 SECTION)	2.000 EA	900.00000		1,800.00	
0158	7144000000-E VEHICLE SIGNAL HEAD (12", 5 SECTION)	4.000 EA	1,200.00000		4,800.00	
0159	7264000000-E MESSENGER CABLE (3/8")	750.000 LF	3.00000		2,250.00	
0160	7300000000-E UNPAVED TRENCHING (**********) (1, 2")	1,550.000 LF	5.00000		7,750.00	
0161	7301000000-E DIRECTIONAL DRILL (**********) (1, 2")	150.000 LF	25.00000		3,750.00	
0162	7324000000-N JUNCTION BOX (STANDARD SIZE)	16.000 EA	175.00000		2,800.00	
0163	7360000000-N WOOD POLE	8.000 EA	750.00000		6,000.00	
0164	7372000000-N GUY ASSEMBLY	16.000 EA	250.00000		4,000.00	

Contract ID: C203143 Project(s): FRA-FR-HSR-0006-10-01-
Letting Date: 03-19-13 Call Order: 010
Bidder: 3752 - Triangle Grading and Paving, Inc

Line No.	Item Description	Approx. Quantity and Units	Unit Price Dollars	Unit Price Cts	Bid Amount Dollars	Bid Amount Ct
0165	7408000000-E 1" RISER WITH WEATHERHEAD	2.000 EA	550.00000		1,100.00	
0166	7420000000-E 2" RISER WITH WEATHERHEAD	8.000 EA	500.00000		4,000.00	
0167	7444000000-E INDUCTIVE LOOP SAWCUT	1,450.000 LF	5.00000		7,250.00	
0168	7456000000-E LEAD-IN CABLE (**********) (14-2)	5,400.000 LF	1.40000		7,560.00	
0169	7575142000-N 900MHZ RADIO	2.000 EA	4,000.00000		8,000.00	
0170	7684000000-N SIGNAL CABINET FOUNDATION	2.000 EA	1,000.00000		2,000.00	
0171	7756000000-N CONTROLLER WITH CABINET (TYPE 2070L, BASE MOUNTED)	2.000 EA	11,500.00000		23,000.00	
0172	7780000000-N DETECTOR CARD (TYPE 2070L)	10.000 EA	250.00000		2,500.00	
0173	7901000000-N CABINET BASE EXTENDER	2.000 EA	350.00000		700.00	
0174	7948000000-N TRAFFIC SIGNAL REMOVAL	1.000 EA	1,500.00000		1,500.00	
	Section 0001 Total				7,329,318.86	

Section 0004 STRUCTURE ITEMS

Alt Group

Contract ID: C203143 Project(s): FRA-FR-HSR-0006-10-01-
Letting Date: 03-19-13 Call Order: 010
Bidder: 3752 - Triangle Grading and Paving, Inc

Line No.	Item Description	Approx. Quantity and Units	Unit Price Dollars	Unit Price Cts	Bid Amount Dollars	Bid Amount Ct
0175	8070000000-E FOUNDATION EXCAVATION	466.000 CY	53.65000		25,000.90	
0176	8121000000-N UNCLASSIFIED STRUCTURE EXCAVATION AT STATION ******** (45+02.23-Y2-)	LUMP	LUMP		20,000.00	
0177	8147000000-E REINFORCED CONCRETE DECK SLAB	14,136.000 SF	25.00000		353,400.00	
0178	8161000000-E GROOVING BRIDGE FLOORS	13,196.000 SF	1.00000		13,196.00	
0179	8182000000-E CLASS A CONCRETE (BRIDGE)	321.900 CY	900.00000		289,710.00	
0180	8210000000-N BRIDGE APPROACH SLABS, STATION********** (45+02.23-Y2-)	LUMP	LUMP		55,000.00	
0181	8217000000-E REINFORCING STEEL (BRIDGE)	51,893.000 LB	1.00000		51,893.00	
0182	8238000000-E SPIRAL COLUMN REINFORCING STEEL (BRIDGE)	3,975.000 LB	2.00000		7,950.00	
0183	8274000000-E MODIFIED 63" PRESTRESSED CONC GIRDERS	633.130 LF	220.00000		139,288.60	
0184	8277000000-E MODIFIED 72" PRESTRESSED CONC GIRDERS	989.790 LF	230.00000		227,651.70	
0185	8364000000-E HP12X53 STEEL PILES	8,115.000 LF	75.00000		608,625.00	

Contract ID: C203143 Project(s): FRA-FR-HSR-0006-10-01-
Letting Date: 03-19-13 Call Order: 010
Bidder: 3752 - Triangle Grading and Paving, Inc

Line No.	Item Description	Approx. Quantity and Units	Unit Price Dollars	Unit Price Cts	Bid Amount Dollars	Bid Amount Ct
0186	8475000000-E TWO BAR METAL RAIL	801.340 LF	100.00000		80,134.00	
0187	8517000000-E 1'-**"X *****" CONCRETE PARA- PET (1'-2" X 2'-6")	817.530 LF	70.00000		57,227.10	
0188	8531000000-E 4" SLOPE PROTECTION	446.000 SY	65.00000		28,990.00	
0189	8657000000-N ELASTOMERIC BEARINGS	LUMP	LUMP		15,000.00	
0190	8692000000-N FOAM JOINT SEALS	LUMP	LUMP		25,000.00	
	Section 0004 Total				1,998,066.30	
	Bid Total				9,327,385.16	

NON-COLLUSION AND DEBARMENT CERTIFICATION

The bidder certifies that neither he, nor any official, agent or employee of the bidder has entered into any agreement, participated in any collusion, or otherwise taken any action which is in restraint of free competitive bidding in connection with this bid, and that the bidder intends to do the work with its own bonafide employees or subcontractors and is not bidding for the benefit of another contractor. In addition, submitting this electronic bid constitutes the bidder's certification of Status under penalty of perjury under the laws of the United States and in accordance with the Debarment Certification on file with the Department.

By submitting this bid, the bidder certifies to the best of his knowledge and belief that he and his principals:

a. Are not presently debarred, suspended, proposed for debarment, declared ineligible, or voluntarily excluded from covered transactions by any Federal department or agency;

b. Have not within a three-year period preceding this proposal been convicted of or had a civil judgment rendered against them for commission of fraud or a criminal offense in connection with obtaining, attempting to obtain, or performing a public (Federal, State or local) transaction or contract under a public transaction; violation of Federal or State antitrust statutes or commission of embezzlement, theft, forgery, bribery, falsification or destruction of records; making false statements; or receiving stolen property;

c. Are not presently indicted for or otherwise criminally or civilly charged by a governmental entity (Federal, State or local) with commission of any of the offenses enumerated in paragraph b. of this certification; and

d. Have not within a three-year period preceding this proposal had one or more public transactions (Federal, State or local) terminated for cause or default.

Where the prospective bidder is unable to certify to any of the statements in this certification, the bidder shall submit an explanation in the blanks provided herein. The explanation will not necessarily result in denial of participation in a contract.

Explanation:
NOT ANSWERED
NOT ANSWERED
NOT ANSWERED
NOT ANSWERED

If the prequalified bidder's status changes, he shall immediately submit a new fully executed non-collusion affidavit and debarment certification with an explanation of the change to the Contract Office prior to submitting the bid.

Failure to furnish a certification or an explanation will be grounds for rejection of a bid

AWARD LIMITS ON MULTIPLE PROJECTS

By answering YES to this statement, the bidder acknowleges that they are using the award limits on multiple projects. No

A bidder who desires to bid on more than one project on which bids are to be opened on the same date, and who also desires to avoid receiving an award of more projects than he is equipped to handle, may bid on any number of projects but may limit the total amount of work awarded to him on selected projects by completing the AWARD LIMITS ON MULTIPLE PROJECTS.

The Award Limits on Multiple Projects must be filled in on each project bid for which the Bidder desires protection.

It is the desire of the Bidder to be awarded contracts, the value of which

will not exceed a total of NOT ANSWERED for those

projects indicated herein, for which bids will be opened on (MM/DD/YY)

The Award Limits shall apply to the following projects:

Contract Number	County
NOT ANSWERED	
NOT ANSWERED	
NOT ANSWERED	
NOT ANSWERED	
NOT ANSWERED	
NOT ANSWERED	

It is agreed that if I am (we are) the low Bidder(s) on indicated projects, the total value of which is more than the above stipulated award limits, the Board of Transportation will award me (us) projects from among those indicated that have a total value not to exceed the award limit and will result in the lowest total bids to the Department of Transportation.

PROPOSAL: C203143
LETTING: L130319 CALL: 010
VENDOR: 3752 Triangle Grading and Paving, Inc

LINE NO.	ITEM NO.	ITEM DESC.	UNIT TYPE	SUBCONTRACTOR QUANTITY	SUBCONTRACTOR UNIT PRICE	EXTENDED AMOUNT
DBE SUBCONTRACTOR: 11572 CRUZ BROTHERS CONCRETE, INC.						
Will Use Quote: Yes						
0066	2549000000-E	2'-6" CONC C	LF	4240.000	12.50000	53000.00
0067	2556000000-E	SHOULDER BER	LF	1988.000	12.50000	24850.00
0068	2577000000-E	CONC EXPRESS	LF	545.000	20.00000	10900.00
0069	2605000000-N	CONCRETE CUR	EA	10.000	950.00000	9500.00
0070	2612000000-E	6" CONCRETE	SY	340.000	42.00000	14280.00
0071	2619000000-E	4" CONCRETE	SY	30.000	50.00000	1500.00
0072	2647000000-E	5" MONO CONC	SY	195.000	40.00000	7800.00
		DBE COMMITMENT TOTAL FOR SUBCONTRACTOR:				121,830.00 Committed
		DBE COMMITMENT TOTAL FOR VENDOR (SubContractor)				121,830
DBE SUBCONTRACTOR: 3080 CURTIN TRUCKING & DRAINAGE, INC.						
Will Use Quote: Yes						
0104	4465000000-N	TEMPORARY CR	EA	1.000	6500.00000	6500.00
0106	4485000000-E	PORT CONC BA	LF	150.000	48.00000	7200.00
		DBE COMMITMENT TOTAL FOR SUBCONTRACTOR:				13,700.00 Committed
		DBE COMMITMENT TOTAL FOR VENDOR (SubContractor)				13,700.
DBE SUBCONTRACTOR: 3376 REYNOLDS FENCE & GUARDRAIL INC						
Will Use Quote: Yes						
0076	3030000000-E	STL BM GUARD	LF	4025.000	14.80000	59570.00
0077	3045000000-E	SBGR SHOP CU	LF	325.000	16.25000	5281.25
0078	3105000000-N	SBGR TERM SE	EA	6.000	75.00000	450.00
0079	3150000000-N	ADDIT GUARDR	EA	10.000	20.00000	200.00
0080	3195000000-N	GR ANCHOR TY	EA	1.000	450.00000	450.00
0081	3215000000-N	GR ANCHOR TY	EA	4.000	1200.00000	4800.00
0082	3270000000-N	GR ANCHOR TY	EA	6.000	1800.00000	10800.00
0083	3317000000-N	GR ANCHOR TY	EA	1.000	1495.00000	1495.00
		DBE COMMITMENT TOTAL FOR SUBCONTRACTOR:				83,046.25 Committed
		DBE COMMITMENT TOTAL FOR VENDOR (SubContractor)				83,046.
DBE SUBCONTRACTOR: 3765 STAY ALERT SAFETY SERVICES INC						
Will Use Quote: Yes						
0088	4025000000-E	CONTR FURN,	SF	102.000	12.50000	1275.00
0087	4025000000-E	CONTR FURN,	SF	54.000	14.25000	769.50
0089	4025000000-E	CONTR FURN,	SF	107.000	12.60000	1348.20
0090	4072000000-E	SUPPORT, 3-L	LF	590.000	4.90000	2891.00
0091	4096000000-N	SIGN ERECTIO	EA	3.000	85.00000	255.00
0092	4102000000-N	SIGN ERECTIO	EA	19.000	55.00000	1045.00

LINE NO.	ITEM NO.	ITEM DESC.	UNIT TYPE	SUBCONTRACTOR QUANTITY	SUBCONTRACTOR UNIT PRICE	EXTENDED AMOUNT
0093	4108000000-N	SIGN ERECTIO	EA	9.000	75.00000	675.00
0094	4155000000-N	DISPOSE SIGN	EA	25.000	3.00000	75.00
0095	4400000000-E	WORK ZONE SI	SF	329.000	4.20000	1381.80
0097	4410000000-E	WORK ZONE SI	SF	162.000	4.60000	745.20
0102	4445000000-E	BARRICADES (	LF	264.000	15.00000	3960.00

DBE COMMITMENT TOTAL FOR SUBCONTRACTOR: 14,420.70 Committed
DBE COMMITMENT TOTAL FOR VENDOR (SubContractor) 14,420.

DBE SUBCONTRACTOR: 3026 KNOX CONTRACT SEEDING CO., INC.
Will Use Quote: Yes

0126	6000000000-E	TEMPORARY SI	LF	20000.000	2.50000	50000.00
0134	6029000000-E	SAFETY FENCE	LF	200.000	1.50000	300.00
0139	6042000000-E	1/4" HARDWAR	LF	3500.000	3.50000	12250.00
0141	6071010000-E	WATTLE	LF	1800.000	9.00000	16200.00
0142	6071020000-E	POLYACRYLAMI	LB	1400.000	10.00000	14000.00
0143	6071030000-E	COIR FIBER B	LF	5000.000	4.50000	22500.00
0130	6015000000-E	TEMPORARY MU	ACR	50.000	500.00000	25000.00
0131	6018000000-E	SEED FOR TEM	LB	1400.000	3.00000	4200.00
0132	6021000000-E	FERT FOR TEM	TON	6.250	950.00000	5937.50
0136	6036000000-E	MATTING FOR	SY	35390.000	1.50000	53085.00
0137	6037000000-E	COIR FIBER M	SY	100.000	6.00000	600.00
0138	6038000000-E	PERM SOIL RE	SY	2810.000	7.00000	19670.00
0146	6084000000-E	SEEDING AND	ACR	50.000	1450.00000	72500.00
0147	6087000000-E	MOWING	ACR	25.000	90.00000	2250.00
0148	6090000000-E	SEED FOR REP	LB	600.000	6.00000	3600.00
0149	6093000000-E	FERT FOR REP	TON	2.000	950.00000	1900.00
0150	6096000000-E	SEED FOR SUP	LB	1250.000	2.75000	3437.50
0151	6108000000-E	FERTILIZER T	TON	37.000	900.00000	33300.00
0152	6111000000-E	IMPERVIOUS D	LF	60.000	52.00000	3120.00
0153	6114500000-N	SPECIALIZED	MHR	10.000	50.00000	500.00
0154	6117000000-N	RESPONSE FOR	EA	100.000	100.00000	10000.00

DBE COMMITMENT TOTAL FOR SUBCONTRACTOR: 354,350.00 Committed
DBE COMMITMENT TOTAL FOR VENDOR (SubContractor) 354,350

DBE SUBCONTRACTOR: 3230 HIATT & MASON ENTERPRISES, INC
Will Use Quote: Yes

0177	8147000000-E	REINF CONCRE	SF	14136.000	6.10500	86300.28
	reinf steel 14,136 SF @ $4.2019= 59,398.06 + SIP forms 14,136 SF @ 1.9031					
0180	8210000000-N	BRG APPR SLA	LS	1.000	10484.32000	10484.32
	reinf steel					
0181	8217000000-E	REINF STEEL	LB	51893.000	0.64720	33585.15
0182	8238000000-E	SPIRAL COL R	LB	3975.000	0.97300	3867.68
0187	8517000000-E	1'-**"X*****	LF	817.530	12.43100	10162.72
	reinf steel					

LINE NO.	ITEM NO.	ITEM DESC.	UNIT TYPE	SUBCONTRACTOR QUANTITY	SUBCONTRACTOR UNIT PRICE	EXTENDED AMOUNT	
		DBE COMMITMENT TOTAL FOR SUBCONTRACTOR:				144,400.14	Committe
		DBE COMMITMENT TOTAL FOR VENDOR (SubContractor)				144,400	
DBE SUBCONTRACTOR: 2855 BOSS CONSTRUCTION CO., INC.							
Will Use Quote: Yes							
0187	8517000000-E	1'-**"X*****	LF	817.530	34.50000	28204.79	
		DBE COMMITMENT TOTAL FOR SUBCONTRACTOR:				28,204.79	Committe
		DBE COMMITMENT TOTAL FOR VENDOR (SubContractor)				28,204.	
DBE SUBCONTRACTOR: 4906 W. G. LEWIS TRUCKING, INC							
Will Use Quote: Yes							
0043	1489000000-E	ASP CONC BAS	TON	12100.000	3.50000	42350.00	
	Haul Only						
0044	1498000000-E	ASP CONC INT	TON	6550.000	3.50000	22925.00	
	Haul Only						
0045	1519000000-E	ASP CONC SUR	TON	9800.000	3.50000	34300.00	
	Haul Only						
		DBE COMMITMENT TOTAL FOR SUBCONTRACTOR:				99,575.00	Committed
		DBE COMMITMENT TOTAL FOR VENDOR (SubContractor)				99,575.	
DBE SUBCONTRACTOR: 7072 BOONE MASONRY, INC.							
Will Use Quote: Yes							
0056	2286000000-N	MASNRY DRAIN	EA	51.000	800.00000	40800.00	
0057	2308000000-E	MASNRY DRAIN	LF	62.900	200.00000	12580.00	
0058	2364000000-N	FRAME W/2GRT	EA	3.000	500.00000	1500.00	
0059	2365000000-N	FRAME W/2GRT	EA	1.000	500.00000	500.00	
0060	2366000000-N	FRAME W/2GRT	EA	1.000	500.00000	500.00	
0061	2367000000-N	FRAME W/2GRT	EA	19.000	495.00000	9405.00	
0062	2374000000-N	FRAME-GRT-HD	EA	5.000	500.00000	2500.00	
0063	2374000000-N	FRAME-GRT-HD	EA	8.000	500.00000	4000.00	
0064	2374000000-N	FRAME-GRT-HD	EA	9.000	500.00000	4500.00	
0065	2396000000-N	FRAME W/COVE	EA	5.000	400.00000	2000.00	
		DBE COMMITMENT TOTAL FOR SUBCONTRACTOR:				78,285.00	Committed
		DBE COMMITMENT TOTAL FOR VENDOR (SubContractor)				78,285.	

TOTAL DBE COMMITMENT FOR VENDOR:

Entered:	10.05%	or	937811.88
Required:	10.00%	or	932738.52

<GOAL MET>

Contract Item Sheets For C203143

Line #	ItemNumber	Sec #	Description	Quantity Unit	Unit Bid Price	Amount Bid
			ROADWAY ITEMS			
0001	0000100000-N	800	MOBILIZATION	Lump Sum LS	450,000.00	450,000.00
0002	0000400000-N	801	CONSTRUCTION SURVEYING	Lump Sum LS	60,000.00	60,000.00
0003	0001000000-E	200	CLEARING & GRUBBING .. ACRE(S)	Lump Sum LS	850,000.00	850,000.00
0004	0008000000-E	200	SUPPLEMENTARY CLEARING & GRUBBING	2 ACR	3,500.00	7,000.00
0005	0015000000-N	205	SEALING ABANDONED WELLS	1 EA	2,000.00	2,000.00
0006	0022000000-E	225	UNCLASSIFIED EXCAVATION	21,400 CY	6.00	128,400.00
0007	0029000000-N	SP	REINFORCED BRIDGE APPROACH FILL, STATION ********** (45+02.23 -Y2-)	Lump Sum LS	25,000.00	25,000.00
0008	0036000000-E	225	UNDERCUT EXCAVATION	16,240 CY	5.50	89,320.00
0009	0106000000-E	230	BORROW EXCAVATION	229,600 CY	5.75	1,320,200.00
0010	0134000000-E	240	DRAINAGE DITCH EXCAVATION	1,010 CY	11.00	11,110.00
0011	0156000000-E	250	REMOVAL OF EXISTING ASPHALT PAVEMENT	7,490 SY	4.00	29,960.00
0012	0177000000-E	250	BREAKING OF EXISTING ASPHALT PAVEMENT	2,680 SY	4.00	10,720.00
0013	0192000000-N	260	PROOF ROLLING	7 HR	185.00	1,295.00
0014	0195000000-E	265	SELECT GRANULAR MATERIAL	13,110 CY	20.00	262,200.00
0015	0196000000-E	270	GEOTEXTILE FOR SOIL STABILIZATION	22,760 SY	1.50	34,140.00
0016	0199000000-E	SP	TEMPORARY SHORING	285 SF	85.00	24,225.00
0017	0225000000-E	SP	REINFORCED SOIL SLOPES	1,350 SY	60.00	81,000.00
0018	0255000000-E	SP	GENERIC GRADING ITEM HAULING AND DISPOSAL OF PETROLEUM CONTAMINATED SOIL	100 TON	75.00	7,500.00
0019	0318000000-E	300	FOUNDATION CONDITIONING MATERIAL, MINOR STRUCTURES	550 TON	35.00	19,250.00

Contract Item Sheets For C203143

Line #	ItemNumber	Sec #	Description	Quantity Unit	Unit Bid Price	Amount Bid
0020	0320000000-E	300	FOUNDATION CONDITIONING GEO-TEXTILE	1,620 SY	2.00	3,240.00
0021	0335200000-E	305	15" DRAINAGE PIPE	1,676 LF	32.00	53,632.00
0022	0335300000-E	305	18" DRAINAGE PIPE	52 LF	36.00	1,872.00
0023	0335400000-E	305	24" DRAINAGE PIPE	88 LF	42.00	3,696.00
0024	0335500000-E	305	30" DRAINAGE PIPE	72 LF	45.00	3,240.00
0025	0335850000-E	305	"" DRAINAGE PIPE ELBOWS (15")	12 EA	400.00	4,800.00
0026	0366000000-E	310	15" RC PIPE CULVERTS, CLASS III	324 LF	33.00	10,692.00
0027	0372000000-E	310	18" RC PIPE CULVERTS, CLASS III	176 LF	36.00	6,336.00
0028	0378000000-E	310	24" RC PIPE CULVERTS, CLASS III	40 LF	37.00	1,480.00
0029	0384000000-E	310	30" RC PIPE CULVERTS, CLASS III	76 LF	48.00	3,648.00
0030	0390000000-E	310	36" RC PIPE CULVERTS, CLASS III	88 LF	78.00	6,864.00
0031	0448000000-E	310	"" RC PIPE CULVERTS, CLASS IV (54")	196 LF	160.00	31,360.00
0032	0448200000-E	310	15" RC PIPE CULVERTS, CLASS IV	1,164 LF	32.00	37,248.00
0033	0448300000-E	310	18" RC PIPE CULVERTS, CLASS IV	540 LF	34.00	18,360.00
0034	0448400000-E	310	24" RC PIPE CULVERTS, CLASS IV	340 LF	44.00	14,960.00
0035	0588000000-E	310	18" CS PIPE CULVERTS, 0.064" THICK	32 LF	33.00	1,056.00
0036	0636000000-E	310	"" CS PIPE ELBOWS, "" THICK (18", 0.064" THICK)	1 EA	415.00	415.00
0037	0995000000-E	340	PIPE REMOVAL	1,684 LF	11.00	18,524.00

Contract Item Sheets For C203143

Line #	ItemNumber	Sec #	Description	Quantity Unit	Unit Bid Price	Amount Bid
0038	0996000000-N	350	PIPE CLEAN-OUT	1 EA	3,000.00	3,000.00
0039	1000000000-E	462	6" SLOPE PROTECTION	41 SY	125.00	5,125.00
0040	1011000000-N	500	FINE GRADING	Lump Sum LS	75,000.00	75,000.00
0041	1220000000-E	545	INCIDENTAL STONE BASE	200 TON	37.00	7,400.00
0042	1330000000-E	607	INCIDENTAL MILLING	1,230 SY	8.00	9,840.00
0043	1489000000-E	610	ASPHALT CONC BASE COURSE, TYPE B25.0B	12,100 TON	39.25	474,925.00
0044	1498000000-E	610	ASPHALT CONC INTERMEDIATE COURSE, TYPE I19.0B	6,550 TON	41.20	269,860.00
0045	1519000000-E	610	ASPHALT CONC SURFACE COURSE, TYPE S9.5B	9,800 TON	40.50	396,900.00
0046	1575000000-E	620	ASPHALT BINDER FOR PLANT MIX	1,435 TON	563.00	807,905.00
0047	1693000000-E	654	ASPHALT PLANT MIX, PAVEMENT REPAIR	20 TON	150.00	3,000.00
0048	2000000000-N	806	RIGHT OF WAY MARKERS	134 EA	150.00	20,100.00
0049	2022000000-E	815	SUBDRAIN EXCAVATION	168 CY	17.00	2,856.00
0050	2033000000-E	815	SUBDRAIN FINE AGGREGATE	84 CY	28.00	2,352.00
0051	2044000000-E	815	6" PERFORATED SUBDRAIN PIPE	500 LF	8.00	4,000.00
0052	2070000000-N	815	SUBDRAIN PIPE OUTLET	1 EA	260.00	260.00
0053	2077000000-E	815	6" OUTLET PIPE	6 LF	15.00	90.00
0054	2209000000-E	838	ENDWALLS	3.4 CY	800.00	2,720.00
0055	2220000000-E	838	REINFORCED ENDWALLS	6 CY	900.00	5,400.00
0056	2286000000-N	840	MASONRY DRAINAGE STRUCTURES	51 EA	1,100.00	56,100.00
0057	2308000000-E	840	MASONRY DRAINAGE STRUCTURES	62.9 LF	240.00	15,096.00

Contract Item Sheets For C203143

Line #	ItemNumber	Sec #	Description	Quantity Unit	Unit Bid Price	Amount Bid
0058	2364000000-N	840	FRAME WITH TWO GRATES, STD 840.16	3 EA	500.00	1,500.00
0059	2365000000-N	840	FRAME WITH TWO GRATES, STD 840.22	1 EA	500.00	500.00
0060	2366000000-N	840	FRAME WITH TWO GRATES, STD 840.24	1 EA	500.00	500.00
0061	2367000000-N	840	FRAME WITH TWO GRATES, STD 840.29	19 EA	495.00	9,405.00
0062	2374000000-N	840	FRAME WITH GRATE & HOOD, STD 840.03, TYPE ** (E)	5 EA	500.00	2,500.00
0063	2374000000-N	840	FRAME WITH GRATE & HOOD, STD 840.03, TYPE ** (F)	8 EA	600.00	4,800.00
0064	2374000000-N	840	FRAME WITH GRATE & HOOD, STD 840.03, TYPE ** (G)	9 EA	600.00	5,400.00
0065	2396000000-N	840	FRAME WITH COVER, STD 840.54	5 EA	425.00	2,125.00
0066	2549000000-E	846	2'-6" CONCRETE CURB & GUTTER	4,240 LF	12.50	53,000.00
0067	2556000000-E	846	SHOULDER BERM GUTTER	1,988 LF	12.50	24,850.00
0068	2577000000-E	846	CONCRETE EXPRESSWAY GUTTER	545 LF	20.00	10,900.00
0069	2605000000-N	848	CONCRETE CURB RAMP	10 EA	950.00	9,500.00
0070	2612000000-E	848	6" CONCRETE DRIVEWAY	340 SY	42.00	14,280.00
0071	2619000000-E	850	4" CONCRETE PAVED DITCH	30 SY	50.00	1,500.00
0072	2647000000-E	852	5" MONOLITHIC CONCRETE ISLANDS (SURFACE MOUNTED)	195 SY	40.00	7,800.00
0073	2724000000-E	857	PRECAST REINFORCED CONCRETE BARRIER, SINGLE FACED	45 LF	165.00	7,425.00
0074	2830000000-N	858	ADJUSTMENT OF MANHOLES	16 EA	500.00	8,000.00
0075	2845000000-N	858	ADJUSTMENT OF METER BOXES OR VALVE BOXES	18 EA	400.00	7,200.00

Contract Item Sheets For C203143

Line #	ItemNumber	Sec #	Description	Quantity Unit	Unit Bid Price	Amount Bid
0076	3030000000-E	862	STEEL BM GUARDRAIL	4,025 LF	14.80	59,570.00
0077	3045000000-E	862	STEEL BM GUARDRAIL, SHOP CURVED	325 LF	16.25	5,281.25
0078	3105000000-N	862	STEEL BM GUARDRAIL TERMINAL SECTIONS	6 EA	75.00	450.00
0079	3150000000-N	862	ADDITIONAL GUARDRAIL POSTS	10 EA	20.00	200.00
0080	3195000000-N	862	GUARDRAIL ANCHOR UNITS, TYPE AT-1	1 EA	450.00	450.00
0081	3215000000-N	862	GUARDRAIL ANCHOR UNITS, TYPE III	4 EA	1,200.00	4,800.00
0082	3270000000-N	SP	GUARDRAIL ANCHOR UNITS, TYPE 350	6 EA	1,800.00	10,800.00
0083	3317000000-N	862	GUARDRAIL ANCHOR UNITS, TYPE B-77	1 EA	1,495.00	1,495.00
0084	3628000000-E	876	RIP RAP, CLASS I	170 TON	40.00	6,800.00
0085	3649000000-E	876	RIP RAP, CLASS B	820 TON	40.00	32,800.00
0086	3656000000-E	876	GEOTEXTILE FOR DRAINAGE	6,250 SY	2.50	15,625.00
0087	4025000000-E	901	CONTRACTOR FURNISHED, TYPE *** SIGN (D)	54 SF	14.25	769.50
0088	4025000000-E	901	CONTRACTOR FURNISHED, TYPE *** SIGN (E)	102 SF	12.50	1,275.00
0089	4025000000-E	901	CONTRACTOR FURNISHED, TYPE *** SIGN (F)	107 SF	12.60	1,348.20
0090	4072000000-E	903	SUPPORTS, 3-LB STEEL U-CHANNEL	590 LF	4.90	2,891.00
0091	4096000000-N	904	SIGN ERECTION, TYPE D	3 EA	85.00	255.00
0092	4102000000-N	904	SIGN ERECTION, TYPE E	19 EA	55.00	1,045.00
0093	4108000000-N	904	SIGN ERECTION, TYPE F	9 EA	75.00	675.00

Contract Item Sheets For C203143

Line #	ItemNumber	Sec #	Description	Quantity Unit	Unit Bid Price	Amount Bid
0094	4155000000-N	907	DISPOSAL OF SIGN SYSTEM, U-CHANNEL	25 EA	3.00	75.00
0095	4400000000-E	1110	WORK ZONE SIGNS (STATIONARY)	329 SF	4.20	1,381.80
0096	4405000000-E	1110	WORK ZONE SIGNS (PORTABLE)	288 SF	10.63	3,061.44
0097	4410000000-E	1110	WORK ZONE SIGNS (BARRICADE MOUNTED)	162 SF	4.60	745.20
0098	4415000000-N	1115	FLASHING ARROW BOARD	1 EA	7,427.82	7,427.82
0099	4420000000-N	1120	PORTABLE CHANGEABLE MESSAGE SIGN	1 EA	14,000.00	14,000.00
0100	4430000000-N	1130	DRUMS	100 EA	48.00	4,800.00
0101	4435000000-N	1135	CONES	80 EA	13.00	1,040.00
0102	4445000000-E	1145	BARRICADES (TYPE III)	264 LF	15.00	3,960.00
0103	4455000000-N	1150	FLAGGER	360 DAY	22.00	7,920.00
0104	4465000000-N	1160	TEMPORARY CRASH CUSHIONS	1 EA	6,500.00	6,500.00
0105	4480000000-N	1165	TMA	1 EA	14,000.00	14,000.00
0106	4485000000-E	1170	PORTABLE CONCRETE BARRIER	150 LF	48.00	7,200.00
0107	4650000000-N	1251	TEMPORARY RAISED PAVEMENT MARKERS	200 EA	5.00	1,000.00
0108	4685000000-E	1205	THERMOPLASTIC PAVEMENT MARKING LINES (4", 90 MILS)	18,298 LF	0.50	9,149.00
0109	4686000000-E	1205	THERMOPLASTIC PAVEMENT MARKING LINES (4", 120 MILS)	31,910 LF	0.54	17,231.40
0110	4695000000-E	1205	THERMOPLASTIC PAVEMENT MARKING LINES (8", 90 MILS)	100 LF	3.00	300.00
0111	4710000000-E	1205	THERMOPLASTIC PAVEMENT MARKING LINES (24", 120 MILS)	284 LF	7.00	1,988.00
0112	4721000000-E	1205	THERMOPLASTIC PAVEMENT MARKING CHARACTER (120 MILS)	3 EA	100.00	300.00

Contract Item Sheets For C203143

Line #	ItemNumber	Sec #	Description	Quantity Unit	Unit Bid Price	Amount Bid
0113	4725000000-E	1205	THERMOPLASTIC PAVEMENT MARKING SYMBOL (90 MILS)	54 EA	100.00	5,400.00
0114	4770000000-E	1205	COLD APPLIED PLASTIC PAVEMENT MARKING LINES, TYPE ** (4") (II)	1,744 LF	3.00	5,232.00
0115	4810000000-E	1205	PAINT PAVEMENT MARKING LINES (4")	18,391 LF	0.25	4,597.75
0116	4845000000-N	1205	PAINT PAVEMENT MARKING SYMBOL	25 EA	50.00	1,250.00
0117	4850000000-E	1205	REMOVAL OF PAVEMENT MARKING LINES (4")	1,606 LF	1.00	1,606.00
0118	4875000000-N	1205	REMOVAL OF PAVEMENT MARKING SYMBOLS & CHARACTERS	3 EA	60.00	180.00
0119	4900000000-N	1251	PERMANENT RAISED PAVEMENT MARKERS	313 EA	4.50	1,408.50
0120	5326200000-E	1510	12" WATER LINE	65 LF	95.00	6,175.00
0121	5648000000-N	1515	RELOCATE WATER METER	2 EA	1,442.00	2,884.00
0122	5672000000-N	1515	RELOCATE FIRE HYDRANT	7 EA	3,500.00	24,500.00
0123	5709200000-E	1520	4" FORCE MAIN SEWER	75 LF	79.00	5,925.00
0124	5798000000-E	1530	ABANDON *** UTILITY PIPE (4")	64 LF	16.00	1,024.00
0125	5804000000-E	1530	ABANDON 12" UTILITY PIPE	695 LF	8.00	5,560.00
0126	6000000000-E	1605	TEMPORARY SILT FENCE	20,000 LF	2.50	50,000.00
0127	6006000000-E	1610	STONE FOR EROSION CONTROL, CLASS A	2,200 TON	40.00	88,000.00
0128	6009000000-E	1610	STONE FOR EROSION CONTROL, CLASS B	7,200 TON	42.00	302,400.00
0129	6012000000-E	1610	SEDIMENT CONTROL STONE	3,500 TON	33.00	115,500.00
0130	6015000000-E	1615	TEMPORARY MULCHING	50 ACR	500.00	25,000.00

Contract Item Sheets For C203143

Line #	ItemNumber	Sec #	Description	Quantity Unit	Unit Bid Price	Amount Bid
0131	6018000000-E	1620	SEED FOR TEMPORARY SEEDING	1,400 LB	3.00	4,200.00
0132	6021000000-E	1620	FERTILIZER FOR TEMPORARY SEEDING	6.25 TON	950.00	5,937.50
0133	6024000000-E	1622	TEMPORARY SLOPE DRAINS	2,000 LF	11.00	22,000.00
0134	6029000000-E	SP	SAFETY FENCE	200 LF	1.50	300.00
0135	6030000000-E	1630	SILT EXCAVATION	14,150 CY	4.00	56,600.00
0136	6036000000-E	1631	MATTING FOR EROSION CONTROL	35,390 SY	1.50	53,085.00
0137	6037000000-E	SP	COIR FIBER MAT	100 SY	6.00	600.00
0138	6038000000-E	SP	PERMANENT SOIL REINFORCEMENT MAT	2,810 SY	7.00	19,670.00
0139	6042000000-E	1632	1/4" HARDWARE CLOTH	3,500 LF	3.50	12,250.00
0140	6070000000-N	1639	SPECIAL STILLING BASINS	2 EA	1,000.00	2,000.00
0141	6071010000-E	SP	WATTLE	1,800 LF	9.00	16,200.00
0142	6071020000-E	SP	POLYACRYLAMIDE (PAM)	1,400 LB	10.00	14,000.00
0143	6071030000-E	1640	COIR FIBER BAFFLE	5,000 LF	4.50	22,500.00
0144	6071050000-E	SP	*** SKIMMER (1-1/2")	7 EA	800.00	5,600.00
0145	6071050000-E	SP	*** SKIMMER (2")	1 EA	1,200.00	1,200.00
0146	6084000000-E	1660	SEEDING & MULCHING	50 ACR	1,450.00	72,500.00
0147	6087000000-E	1660	MOWING	25 ACR	90.00	2,250.00
0148	6090000000-E	1661	SEED FOR REPAIR SEEDING	600 LB	6.00	3,600.00
0149	6093000000-E	1661	FERTILIZER FOR REPAIR SEEDING	2 TON	950.00	1,900.00
0150	6096000000-E	1662	SEED FOR SUPPLEMENTAL SEEDING	1,250 LB	2.75	3,437.50

Contract Item Sheets For C203143

Line #	ItemNumber	Sec #	Description	Quantity Unit	Unit Bid Price	Amount Bid
0151	6108000000-E	1665	FERTILIZER TOPDRESSING	37 TON	900.00	33,300.00
0152	6111000000-E	SP	IMPERVIOUS DIKE	60 LF	52.00	3,120.00
0153	6114500000-N	1667	SPECIALIZED HAND MOWING	10 MHR	50.00	500.00
0154	6117000000-N	SP	RESPONSE FOR EROSION CONTROL	100 EA	100.00	10,000.00
0155	7060000000-E	1705	SIGNAL CABLE	1,350 LF	2.00	2,700.00
0156	7120000000-E	1705	VEHICLE SIGNAL HEAD (12", 3 SECTION)	8 EA	750.00	6,000.00
0157	7132000000-E	1705	VEHICLE SIGNAL HEAD (12", 4 SECTION)	2 EA	900.00	1,800.00
0158	7144000000-E	1705	VEHICLE SIGNAL HEAD (12", 5 SECTION)	4 EA	1,200.00	4,800.00
0159	7264000000-E	1710	MESSENGER CABLE (3/8")	750 LF	3.00	2,250.00
0160	7300000000-E	1715	UNPAVED TRENCHING (**********) (1, 2")	1,550 LF	5.00	7,750.00
0161	7301000000-E	1715	DIRECTIONAL DRILL (**********) (1, 2")	150 LF	25.00	3,750.00
0162	7324000000-N	1716	JUNCTION BOX (STANDARD SIZE)	16 EA	175.00	2,800.00
0163	7360000000-N	1720	WOOD POLE	8 EA	750.00	6,000.00
0164	7372000000-N	1721	GUY ASSEMBLY	16 EA	250.00	4,000.00
0165	7408000000-E	1722	1" RISER WITH WEATHERHEAD	2 EA	550.00	1,100.00
0166	7420000000-E	1722	2" RISER WITH WEATHERHEAD	8 EA	500.00	4,000.00
0167	7444000000-E	1725	INDUCTIVE LOOP SAWCUT	1,450 LF	5.00	7,250.00
0168	7456000000-E	1726	LEAD-IN CABLE (**********) (14-2)	5,400 LF	1.40	7,560.00
0169	7575142000-N	1736	900MHZ RADIO	2 EA	4,000.00	8,000.00

Contract Item Sheets For C203143

Line #	ItemNumber	Sec #	Description	Quantity Unit	Unit Bid Price	Amount Bid
0170	7684000000-N	1750	SIGNAL CABINET FOUNDATION	2 EA	1,000.00	2,000.00
0171	7756000000-N	1751	CONTROLLER WITH CABINET (TYPE 2070L, BASE MOUNTED)	2 EA	11,500.00	23,000.00
0172	7780000000-N	1751	DETECTOR CARD (TYPE 2070L)	10 EA	250.00	2,500.00
0173	7901000000-N	1753	CABINET BASE EXTENDER	2 EA	350.00	700.00
0174	7948000000-N	1757	TRAFFIC SIGNAL REMOVAL	1 EA	1,500.00	1,500.00

Contract Item Sheets For C203143

Line #	ItemNumber	Sec #	Description	Quantity Unit	Unit Bid Price	Amount Bid
0175	8070000000-E	410	FOUNDATION EXCAVATION	466 CY	53.65	25,000.90
0176	8121000000-N	412	UNCLASSIFIED STRUCTURE EXCAVATION AT STATION ******** (45+02.23-Y2-)	Lump Sum LS	20,000.00	20,000.00
0177	8147000000-E	420	REINFORCED CONCRETE DECK SLAB	14,136 SF	25.00	353,400.00
0178	8161000000-E	420	GROOVING BRIDGE FLOORS	13,196 SF	1.00	13,196.00
0179	8182000000-E	420	CLASS A CONCRETE (BRIDGE)	321.9 CY	900.00	289,710.00
0180	8210000000-N	422	BRIDGE APPROACH SLABS, STATION ********** (45+02.23-Y2-)	Lump Sum LS	55,000.00	55,000.00
0181	8217000000-E	425	REINFORCING STEEL (BRIDGE)	51,893 LB	1.00	51,893.00
0182	8238000000-E	425	SPIRAL COLUMN REINFORCING STEEL (BRIDGE)	3,975 LB	2.00	7,950.00
0183	8274000000-E	430	MODIFIED 63" PRESTRESSED CONC GIRDERS	633.13 LF	220.00	139,288.60
0184	8277000000-E	430	MODIFIED 72" PRESTRESSED CONC GIRDERS	989.79 LF	230.00	227,651.70
0185	8364000000-E	450	HP12X53 STEEL PILES	8,115 LF	75.00	608,625.00
0186	8475000000-E	460	TWO BAR METAL RAIL	801.34 LF	100.00	80,134.00
0187	8517000000-E	460	1'-**"X *****" CONCRETE PARAPET (1'-2" X 2'-6")	817.53 LF	70.00	57,227.10
0188	8531000000-E	462	4" SLOPE PROTECTION	446 SY	65.00	28,990.00
0189	8657000000-N	430	ELASTOMERIC BEARINGS	Lump Sum LS	15,000.00	15,000.00
0190	8692000000-N	SP	FOAM JOINT SEALS	Lump Sum LS	25,000.00	25,000.00

TOTAL AMOUNT OF BID FOR ENTIRE PROJECT **$9,327,385.16**

Contract No. C203143

County Rowan

Rev. 5-19-11

EXECUTION OF CONTRACT
NON-COLLUSION AFFIDAVIT, DEBARMENT CERTIFICATION AND GIFT BAN CERTIFICATION

CORPORATION

The Contractor being duly sworn, solemnly swears (or affirms) that neither he, nor any official, agent or employee has entered into any agreement, participated in any collusion, or otherwise taken any action which is in restraint of free competitive bidding in connection with this Contract, that the Contractor has not been convicted of violating *N.C.G.S. § 133-24* within the last three years, and that the Contractor intends to do the work with its own bonafide employees or subcontractors and did not bid for the benefit of another contractor.

By submitting this Execution of Contract, Non-Collusion Affidavit and Debarment Certification, the Contractor is certifying his status under penalty of perjury under the laws of the United States in accordance with the Debarment Certification attached, provided that the Debarment Certification also includes any required statements concerning exceptions that are applicable.

N.C.G.S. § 133-32 and Executive Order 24 prohibit the offer to, or acceptance by, any State Employee of any gift from anyone with a contract with the State, or from any person seeking to do business with the State. By execution of any response in this procurement, you attest, for your entire organization and its employees or agents, that you are not aware that any such gift has been offered, accepted, or promised by any employees of your organization.

SIGNATURE OF CONTRACTOR

Triangle Grading and Paving, Inc.

Full name of Corporation

P.O. Drawer 2570, Burlington, NC 27216-2570

Address as Prequalified

Attest _____

Secretary/~~Assistant Secretary~~

Select appropriate title

By _____

~~President~~/Vice President/~~Assistant Vice President~~

Select appropriate title

JACK BAILEY

Print or type Signer's name

B G Kirkpatrick, Jr.

Print or type Signer's name

CORPORATE SEAL

AFFIDAVIT MUST BE NOTARIZED

Subscribed and sworn to before me this the

16th day of April 2013.

_____

Signature of Notary Public

of Alamance County

State of NC

My Commission Expires: 1/21/2014

NOTARY SEAL

Christine V. Isaac
Notary
Public
Alamance County, NC

Contract No. C203143
County Rowan

Rev. 5-19-11

DEBARMENT CERTIFICATION

Conditions for certification:

1. The prequalified bidder shall provide immediate written notice to the Department if at any time the bidder learns that his certification was erroneous when he submitted his debarment certification or explanation filed with the Department, or has become erroneous because of changed circumstances.

2. The terms *covered transaction, debarred, suspended, ineligible, lower tier covered transaction, participant, person, primary covered transaction, principal, proposal,* and *voluntarily excluded,* as used in this provision, have the meanings set out in the Definitions and Coverage sections of the rules implementing Executive Order 12549. A copy of the Federal Rules requiring this certification and detailing the definitions and coverages may be obtained from the Contract Officer of the Department.

3. The prequalified bidder agrees by submitting this form, that he will not knowingly enter into any lower tier covered transaction with a person who is debarred, suspended, declared ineligible, or voluntarily excluded from participation in NCDOT contracts, unless authorized by the Department.

4. For Federal Aid projects, the prequalified bidder further agrees that by submitting this form he will include the Federal-Aid Provision titled *Required Contract Provisions Federal-Aid Construction Contract (Form FHWA PR* 1273) provided by the Department, without subsequent modification, in all lower tier covered transactions.

5. The prequalified bidder may rely upon a certification of a participant in a lower tier covered transaction that he is not debarred, suspended, ineligible, or voluntarily excluded from the covered transaction, unless he knows that the certification is erroneous. The bidder may decide the method and frequency by which he will determine the eligibility of his subcontractors.

6. Nothing contained in the foregoing shall be construed to require establishment of a system of records in order to render in good faith the certification required by this provision. The knowledge and information of a participant is not required to exceed that which is normally possessed by a prudent person in the ordinary course of business dealings.

7. Except as authorized in paragraph 6 herein, the Department may terminate any contract if the bidder knowingly enters into a lower tier covered transaction with a person who is suspended, debarred, ineligible, or voluntarily excluded from participation in this transaction, in addition to other remedies available by the Federal Government.

Contract No. C203143
County Rowan

Rev. 5-19-11

DEBARMENT CERTIFICATION

The prequalified bidder certifies to the best of his knowledge and belief, that he and his principals:

a. Are not presently debarred, suspended, proposed for debarment, declared ineligible, or voluntarily excluded from covered transactions by any Federal department or agency;

b. Have not within a three-year period preceding this proposal been convicted of or had a civil judgment rendered against them for commission of fraud or a criminal offense in connection with obtaining, attempting to obtain, or performing a public (Federal, State or local) transaction or contract under a public transaction; violation of Federal or State antitrust statutes or commission of embezzlement, theft, forgery, bribery, falsification or destruction of records; making false statements; or receiving stolen property;

c. Are not presently indicted for or otherwise criminally or civilly charged by a governmental entity (Federal, State or local) with commission of any of the offenses enumerated in paragraph b. of this certification; and

d. Have not within a three-year period preceding this proposal had one or more public transactions (Federal, State or local) terminated for cause or default.

e. Will submit a revised Debarment Certification immediately if his status changes and will show in his bid proposal an explanation for the change in status.

If the prequalified bidder cannot certify that he is not debarred, he shall provide an explanation with this submittal. An explanation will not necessarily result in denial of participation in a contract.

Failure to submit a non-collusion affidavit and debarment certification will result in the prequalified bidder's bid being considered non-responsive.

☐ Check here if an explanation is attached to this certification.

1-17-12
Z-140

Contract No. C203143

County (ies): Rowan

ACCEPTED BY THE
DEPARTMENT OF TRANSPORTATION

Contract Officer

4/23/13
Date

Execution of Contract and Bonds
Approved as to Form:

Asst. Attorney General

Signature Sheet (Bid - Acceptance by Department)

Bond No. 018030022

Contract No. C203143
County Rowan

Rev 5-17-11

CONTRACT PAYMENT BOND

Date of Payment Bond Execution	April 11, 2013
Name of Principal Contractor	Triangle Grading & Paving, Inc.
Name of Surety:	Liberty Mutual Insurance Company
Name of Contracting Body:	**North Carolina Department of Transportation**
	Raleigh, North Carolina
Amount of Bond:	($9,327,385.16) Nine Million Three Hundred Twenty Seven Thousand Three Hundred Eighty Five Dollars and 16/100
Contract ID No.:	C203143
County Name:	Rowan

KNOW ALL MEN BY THESE PRESENTS, That we, the PRINCIPAL CONTRACTOR (hereafter, PRINCIPAL) and SURETY above named, are held and firmly bound unto the above named Contracting Body, hereinafter called the Contracting Body, in the penal sum of the amount stated above for the payment of which sum well and truly to be made, we bind ourselves, our heirs, executors, administrators, and successors, jointly and severally, firmly by these presents.

THE CONDITION OF THIS OBLIGATION IS SUCH, that whereas the principal entered into a certain contract with the Contracting Body, numbered as shown above and hereto attached:

NOW THEREFORE, if the principal shall promptly make payment to all persons supplying labor and material in the prosecution of the work provided for in said contract, and any and all duly authorized modifications of said contract that may hereafter be made, notice of which modifications to the surety being hereby waived, then this obligation to be void; otherwise to remain in full force and virtue.

IN WITNESS WHEREOF, the above-bound parties have executed this instrument under their several seals on the date indicated above, the name and corporate seal of each corporate party being hereto affixed and these presents duly signed by its undersigned representative, pursuant to authority of its governing body.

Contract No. C203143

County Rowan

Rev 5-17-11

CONTRACT PAYMENT BOND

Affix Seal of Surety Company

Liberty Mutual Insurance Company
Print or type Surety Company Name

By Ramona Fewell
Print, stamp or type name of Attorney-in-Fact

LIBERTY MUTUAL INSURANCE COMPANY INCORPORATED 1912 MASSACHUSETTS

Signature of Attorney-in-Fact

Debra S. Ritter
Signature of Witness

Debra S. Ritter
Print or type Signer's name

6230 Fairview Road, Suite 230

Charlotte, NC 28210
Address of Attorney-in-Fact

Contract No. C203143 Rev 5-17-11

County Rowan

CONTRACT PAYMENT BOND

CORPORATION

SIGNATURE OF CONTRACTOR (Principal)

Triangle Grading & Paving, Inc.

Full name of Corporation

PO Drawer 2570, Burlington, NC 27216-2570

Address as prequalified

By _____

Signature of ~~President~~, Vice President, ~~Assistant Vice President~~

Select appropriate title

B.G. Kirkpatrick, Jr.

Print or type Signer's name

Affix Corporate Seal

Attest _____

Signature of Secretary, ~~Assistant Secretary~~

Select appropriate title

JACK BAILEY

Print or type Signer's name

Bond No. 018030022

Contract No. C203143 Rev 5-17-11

County Rowan

CONTRACT PERFORMANCE BOND

Date of Performance Bond Execution: April 11, 2013

Name of Principal Contractor: Triangle Grading & Paving, Inc.

Name of Surety: Liberty Mutual Insurance Company

Name of Contracting Body: **North Carolina Department of Transportation**

Raleigh, North Carolina

Amount of Bond: ($9,327,385.16) Nine Million Three Hundred Twenty Seven Thousand Three Hundred Eighty Five Dollars and 16/100

Contract ID No.: C203143

County Name: Rowan

KNOW ALL MEN BY THESE PRESENTS, That we, the PRINCIPAL CONTRACTOR (hereafter, PRINCIPAL) and SURETY above named, are held and firmly bound unto the above named Contracting Body, hereinafter called the Contracting Body, in the penal sum of the amount stated above for the payment of which sum well and truly to be made, we bind ourselves, our heirs, executors, administrators, and successors, jointly and severally, firmly by these presents.

THE CONDITION OF THIS OBLIGATION IS SUCH, that whereas the principal entered into a certain contract with the Contracting Body, numbered as shown above and hereto attached:

NOW THEREFORE, if the principal shall well and truly perform and fulfill all the undertakings, covenants, terms, conditions, and agreements of said contract during the original term of said contract and any extensions thereof that may be granted by the Contracting Body, with or without notice to the Surety, and during the life of any guaranty required under the contract, and shall also well and truly perform and fulfill all the undertakings, covenants, terms, conditions, and agreements of any and all duly authorized modifications of said contract that may hereafter be made, notice of which modifications to the surety being hereby waived, then this obligation to be void; otherwise to remain in full force and virtue.

IN WITNESS WHEREOF, the above-bound parties have executed this instrument under their several seals on the date indicated above, the name and corporate seal of each corporate party being hereto affixed and these presents duly signed by its undersigned representative, pursuant to authority of its governing body.

Contract No. C203143
County Rowan

Rev 5-17-11

CONTRACT PERFORMANCE BOND

Affix Seal of Surety Company

Liberty Mutual Insurance Company
Print or type Surety Company Name

By Ramona Fewell
Print, stamp or type name of Attorney-in-Fact

LIBERTY MUTUAL INSURANCE COMPANY INCORPORATED 1912 MASSACHUSETTS

Signature of Attorney-in-Fact

Debra S. Ritter
Signature of Witness

Debra S. Ritter
Print or type Signer's name

6230 Fairview Road, Suite 230
Charlotte, NC 28210
Address of Attorney-in-Fact

Contract No. C203143
County Rowan

Rev 5-17-11

CONTRACT PERFORMANCE BOND

CORPORATION

SIGNATURE OF CONTRACTOR (Principal)

Triangle Grading & Paving, Inc.
Full name of Corporation

PO Drawer 2570, Burlington, NC 27216-2570
Address as prequalified

By _____
Signature of ~~President~~, Vice President, ~~Assistant Vice President~~
Select appropriate title

B.G. Kirkpatrick Jr.
Print or type Signer's name

Affix Corporate Seal

Attest _____
Signature of Secretary, ~~Assistant Secretary~~
Select appropriate title

JACK BAILEY
Print or type Signer's name

This Power of Attorney limits the acts of those named herein, and they have no authority to bind the Company except in the manner and to the extent herein stated. Not valid for mortgage, note, loan, letter of credit, bank deposit, currency rate, interest rate or residual value guarantees. To confirm the validity of this Power of Attorney call 610-832-8240 between 9:00 am and 4:30 pm EST on any business day.

American Fire and Casualty Company
The Ohio Casualty Insurance Company
Liberty Mutual Insurance Company
West American Insurance Company

POWER OF ATTORNEY

KNOWN ALL PERSONS BY THESE PRESENTS: That American Fire & Casualty Company and The Ohio Casualty Insurance Company are corporations duly organized under the laws of the State of New Hampshire, that Liberty Mutual Insurance Company is a corporation duly organized under the laws of the State of Massachusetts, and West American Insurance Company is a corporation duly organized under the laws of the State of Indiana (herein collectively called the "Companies"), pursuant to and by authority herein set forth, does hereby name, constitute and appoint, Ramona Fewell of the city of Charlotte, state of NC its true and lawful attorney-in-fact, with full power and authority hereby conferred to sign, execute and acknowledge the following surety bond:

Principal Name: Triangle Grading & Paving, Inc.

Obligee Name: NCDOT

Surety Bond Number: 018030022 **Bond Amount:** See Bond Form

IN WITNESS WHEREOF, this Power of Attorney has been subscribed by an authorized officer or official of the Companies and the corporate seals of the Companies have been affixed thereto this 1st day of December, 2012.

American Fire and Casualty Company
The Ohio Casualty Insurance Company
Liberty Mutual Insurance Company
West American Insurance Company

By: _____
Gregory W. Davenport, Assistant Secretary

STATE OF WASHINGTON ss
COUNTY OF KING

On this 1st day of December, 2012, before me personally appeared Gregory W. Davenport, who acknowledged himself to be the Assistant Secretary of American Fire and Casualty Company, Liberty Mutual Insurance Company, The Ohio Casualty Company, and West American Insurance Company, and that he, as such, being authorized so to do, execute the foregoing instrument for the purposes therein contained by signing on behalf of the corporations by himself as a duly authorized officer.

IN WITNESS WHEREOF, I have hereunto subscribed my name and affixed my notarial seal at Seattle, Washington, on the day and year first above written.

By: _____
KD Riley, Notary Public, Notary Public

This Power of Attorney is made and executed pursuant to and by authority of the following By-laws and Authorizations of American Fire and Casualty Company, The Ohio Casualty Insurance Company, Liberty Mutual Insurance Company, and West American Insurance Company which resolutions are now in full force and effect reading as follows:

ARTICLE IV – OFFICERS – Section 12. Power of Attorney. Any officer or other official of the Corporation authorized for that purpose in writing by the Chairman or the President, and subject to such limitation as the Chairman or the President may prescribe, shall appoint such attorneys-in-fact, as may be necessary to act in behalf of the Corporation to make, execute, seal, acknowledge and deliver as surety any and all undertakings, bonds, recognizances and other surety obligations. Such attorneys-in-fact, subject to the limitations set forth in their respective powers of attorney, shall have full power to bind the Corporation by their signature and execution of any such instruments and to attach thereto the seal of the Corporation. When so executed, such instruments shall be as binding as if signed by the President and attested to by the Secretary. Any power or authority granted to any representative or attorney-in-fact under the provisions of this article may be revoked at any time by the Board, the Chairman, the President or by the officer or officers granting such power or authority.

ARTICLE XIII – Execution of Contracts – SECTION 5. Surety Bonds and Undertakings. Any officer of the Company authorized for that purpose in writing by the chairman or the president, and subject to such limitations as the chairman or the president may prescribe, shall appoint such attorneys-in-fact, as may be necessary to act in behalf of the Company to make, execute, seal, acknowledge and deliver as surety any and all undertakings, bonds, recognizances and other surety obligations. Such attorneys-in-fact subject to the limitations set forth in their respective powers of attorney, shall have full power to bind the Company by their signature and execution of any such instruments and to attach thereto the seal of the Company. When so executed such instruments shall be as binding as if signed by the president and attested by the secretary.

Certificate of Designation – The President of the Company, acting pursuant to the Bylaws of the Company, authorizes Gregory W. Davenport, Assistant Secretary to appoint such attorneys-in-fact as may be necessary to act on behalf of the Company to make, execute, seal, acknowledge and deliver as surety any and all undertakings, bonds, recognizances and other surety obligations.

Authorization – By unanimous consent of the Company's Board of Directors, the Company consents that facsimile or mechanically reproduced signature of any assistant secretary of the Company, wherever appearing upon a certified copy of any power of attorney issued by the Company in connection with surety bonds, shall be valid and binding upon the Company with the same force and effect as though manually affixed.

I, David M. Carey, the undersigned, Assistant Secretary, of American Fire and Casualty Company, The Ohio Casualty Insurance Company, Liberty Mutual Insurance Company, and West American Insurance Company do hereby certify that the original power of attorney of which the foregoing is a full, true and correct copy of the Power of Attorney executed by said Companies, is in full force and effect and has not been revoked.

IN TESTIMONY WHEREOF, I have hereunto set my hand and affixed the seals of said Companies this 11th day of April, 2013.

By: _____