STATE OF NORTH CAROLINA
DEPARTMENT OF TRANSPORTATION
RALEIGH, N.C.

C203207

CONTRACT AND
CONTRACT BONDS

FOR CONTRACT NO. C203207

WBS	52000.3.STR02T4D FRA-FR-HSR-0006-10-
T.I.P NO.	P-5206B, P-5206C, P-5206D
COUNTY OF	ROWAN
THIS IS THE	ROADWAY & STRUCTURE CONTRACT
ROUTE NUMBER	LENGTH 10.560 MILES
LOCATION	NORTH CAROLINA RR / NORFOLK SOUTHERN MAINLINE REID TO NORTH KANNAPOLIS RAILROAD ROADBED (MP-337 TO MP-348.3).
CONTRACTOR	BLYTHE DEVELOPMENT CO.
ADDRESS	1415 E WESTINGHOUSE BLVD CHARLOTTE, NC 282735801

BIDS OPENED OCTOBER 15, 2013

CONTRACT EXECUTION NOV 0 8 2013

STATE OF NORTH CAROLINA
DEPARTMENT OF TRANSPORTATION
RALEIGH, N.C.

PROPOSAL

DATE AND TIME OF BID OPENING: **OCTOBER 15, 2013 AT 2:00 PM**

CONTRACT ID	C203207
WBS	52000.3.STR02T4D
FEDERAL-AID NO.	FRA-FR-HSR-0006-10-
COUNTY	ROWAN
T.I.P. NO.	P-5206B, P-5206C, P-5206D
MILES	10.560
ROUTE NO.	
LOCATION	NORTH CAROLINA RR / NORFOLK SOUTHERN MAINLINE REID TO NORTH KANNAPOLIS RAILROAD ROADBED (MP-337 TO MP-348.3).
TYPE OF WORK	GRADING, DRAINAGE, PAVING, C&G, SIGNALS, RET WALL, AND STR.

NOTICE:

ALL BIDDERS SHALL COMPLY WITH ALL APPLICABLE LAWS REGULATING THE PRACTICE OF GENERAL CONTRACTING AS CONTAINED IN CHAPTER 87 OF THE GENERAL STATUTES OF NORTH CAROLINA WHICH REQUIRES THE BIDDER TO BE LICENSED BY THE N.C. LICENSING BOARD FOR CONTRACTORS WHEN BIDDING ON ANY NON-FEDERAL AID PROJECT WHERE THE BID IS $30,000 OR MORE, EXCEPT FOR CERTAIN SPECIALTY WORK AS DETERMINED BY THE LICENSING BOARD. BIDDERS SHALL ALSO COMPLY WITH ALL OTHER APPLICABLE LAWS REGULATING THE PRACTICES OF ELECTRICAL, PLUMBING, HEATING AND AIR CONDITIONING AND REFRIGERATION CONTRACTING AS CONTAINED IN CHAPTER 87 OF THE GENERAL STATUTES OF NORTH CAROLINA. NOT WITHSTANDING THESE LIMITATIONS ON BIDDING, THE BIDDER WHO IS AWARDED ANY PROJECT SHALL COMPLY WITH CHAPTER 87 OF THE GENERAL STATUTES OF NORTH CAROLINA FOR LICENSING REQUIREMENTS WITHIN 60 CALENDAR DAYS OF BID OPENING, REGARDLESS OF FUNDING SOURCES.

BIDS WILL BE RECEIVED AS SHOWN BELOW:

THIS IS A <u>ROADWAY & STRUCTURE</u> PROPOSAL

5% BID BOND OR BID DEPOSIT REQUIRED

STATE OF NORTH CAROLINA DEPARTMENT OF TRANSPORTATION

PROPOSAL FOR THE CONSTRUCTION OF

CONTRACT No. C203207 IN ROWAN COUNTY, NORTH CAROLINA

Date_____ 20_____

DEPARTMENT OF TRANSPORTATION,

RALEIGH, NORTH CAROLINA

The Bidder has carefully examined the location of the proposed work to be known as Contract No. **C203207**; has carefully examined the plans and specifications, which are acknowledged to be part of the proposal, the special provisions, the proposal, the form of contract, and the forms of contract payment bond and contract performance bond; and thoroughly understands the stipulations, requirements and provisions. The undersigned bidder agrees to bound upon his execution of the bid and subsequent award to him by the Board of Transportation in accordance with this proposal to provide the necessary contract payment bond and contract performance bond within fourteen days after the written notice of award is received by him. The undersigned Bidder further agrees to provide all necessary machinery, tools, labor, and other means of construction; and to do all the work and to furnish all materials, except as otherwise noted, necessary to perform and complete the said contract in accordance with *the 2012 Standard Specifications for Roads and Structures* by the dates(s) specified in the Project Special Provisions and in accordance with the requirements of the Engineer, and at the unit or lump sum prices, as the case may be, for the various items given on the sheets contained herein.

The Bidder shall provide and furnish all the materials, machinery, implements, appliances and tools, and perform the work and required labor to construct and complete State Highway Contract No. **C203207** in **Rowan County**, for the unit or lump sum prices, as the case may be, bid by the Bidder in his bid and according to the proposal, plans, and specifications prepared by said Department, which proposal, plans, and specifications show the details covering this project, and hereby become a part of this contract.

The published volume entitled *North Carolina Department of Transportation, Raleigh, Standard Specifications for Roads and Structures, January 2012* with all amendments and supplements thereto, is by reference incorporated into and made a part of this contract; that, except as herein modified, all the construction and work included in this contract is to be done in accordance with the specifications contained in said volume, and amendments and supplements thereto, under the direction of the Engineer.

If the proposal is accepted and the award is made, the contract is valid only when signed either by the Contract Officer or such other person as may be designated by the Secretary to sign for the Department of Transportation. The conditions and provisions herein cannot be changed except over the signature of the said Contract Officer.

The quantities shown in the itemized proposal for the project are considered to be approximate only and are given as the basis for comparison of bids. The Department of Transportation may increase or decrease the quantity of any item or portion of the work as may be deemed necessary or expedient.

An increase or decrease in the quantity of an item will not be regarded as sufficient ground for an increase or decrease in the unit prices, nor in the time allowed for the completion of the work, except as provided for the contract.

Accompanying this bid is a bid bond secured by a corporate surety, or certified check payable to the order of the Department of Transportation, for five percent of the total bid price, which deposit is to be forfeited as liquidated damages in case this bid is accepted and the Bidder shall fail to provide the required payment and performance bonds with the Department of Transportation, under the condition of this proposal, within 14 calendar days after the written notice of award is received by him, as provided in the *Standard Specifications*; otherwise said deposit will be returned to the Bidder.

NORTH CAROLINA PROFESSIONAL SEAL 21076 ENGINEER RANDY A. GARRIS

9/13/13

State Contract Officer

TABLE OF CONTENTS

COVER SHEET
PROPOSAL SHEET

PROJECT SPECIAL PROVISIONS

CONTRACT TIME AND LIQUIDATED DAMAGES: 1
INTERMEDIATE CONTRACT TIME NUMBER 1 AND LIQUIDATED DAMAGES: 1
INTERMEDIATE CONTRACT TIME NUMBER 2 AND INCENTIVE/DISINCENTIVE: 2
INTERMEDIATE CONTRACT TIME NUMBER 3 AND LIQUIDATED DAMAGES: 3
INTERMEDIATE CONTRACT TIME NUMBER 4 AND INCENTIVE/DISINCENTIVE: 3
INTERMEDIATE CONTRACT TIME NUMBER 5 AND LIQUIDATED DAMAGES: 4
INTERMEDIATE CONTRACT TIME NUMBER 6 AND INCENTIVE/DISINCENTIVE: 5
INTERMEDIATE CONTRACT TIME NUMBER 7 AND INCENTIVE/DISINCENTIVE: 6
INTERMEDIATE CONTRACT TIME NUMBER 8 AND LIQUIDATED DAMAGES: 7
INTERMEDIATE CONTRACT TIME NUMBER 9 AND LIQUIDATED DAMAGES: 7
INTERMEDIATE CONTRACT TIME NUMBER 10 AND LIQUIDATED DAMAGES: 8
INTERMEDIATE CONTRACT TIME NUMBER 11 AND LIQUIDATED DAMAGES: 8
INTERMEDIATE CONTRACT TIME NUMBER 12 AND LIQUIDATED DAMAGES: 9
INTERMEDIATE CONTRACT TIME NUMBER 13 AND LIQUIDATED DAMAGES: 10
INTERMEDIATE CONTRACT TIME NUMBER 14 AND LIQUIDATED DAMAGES: 11
INTERMEDIATE CONTRACT TIME NUMBER 15 AND LIQUIDATED DAMAGES: 12
INTERMEDIATE CONTRACT TIME NUMBER 16 AND LIQUIDATED DAMAGES: 13
RAILROAD COORDINATION: 13
MANDATORY PRE-BID CONFERENCE (Prequalifying To Bid): 14
PERMANENT VEGETATION ESTABLISHMENT: 15
DELAY IN RIGHT OF ENTRY (P-5206B): 16
DELAY IN RIGHT OF ENTRY (P-5206C): 16
DELAY IN RIGHT OF ENTRY (P-5206D): 16B
PROGRESS SCHEDULE (RAIL): 17
MAJOR CONTRACT ITEMS: 18
SPECIALTY ITEMS: 18
FUEL PRICE ADJUSTMENT: 18
SCHEDULE OF ESTIMATED COMPLETION PROGRESS: 19
DISADVANTAGED BUSINESS ENTERPRISE FOR RAILROAD PIEDMONT IMPROVEMENT PLAN (PIP): 19
ARRA AND OERI CONTRACT PROVISIONS AND REPORTING REQUIREMENT CERTIFICATION: 27
SPECIAL NOTICE TO BIDDERS: 33
PREQUALIFICATION OF RAIL ROAD GRADING CONTRACTORS (PIP): 34
PROTECTION OF RAILROAD INTEREST: 34
CERTIFICATION FOR FEDERAL-AID CONTRACTS: 54
CONTRACTOR'S LICENSE REQUIREMENTS: 54
U.S. DEPARTMENT OF TRANSPORTATION HOTLINE: 54
SUBSURFACE INFORMATION: 55
LOCATING EXISTING UNDERGROUND UTILITIES: 55

RESOURCE CONSERVATION: 55
DOMESTIC STEEL: 55
PORTABLE CONCRETE BARRIER - (Partial Payments for Materials): 56
MAINTENANCE OF THE PROJECT: 56
COOPERATION BETWEEN CONTRACTORS: 56
TWELVE MONTH GUARANTEE: 57
GIFTS FROM VENDORS AND CONTRACTORS: 57
EROSION AND SEDIMENT CONTROL/STORMWATER CERTIFICATION: 58
PROCEDURE FOR MONITORING BORROW PIT DISCHARGE: 63
SUPPLEMENTAL CONTRACTOR EROSION CONTROL RESPONSIBILITIES: 64
SUPPLEMENTAL RESPONSE FOR EROSION CONTROL: 65
EMPLOYMENT: 65
STATE HIGHWAY ADMINISTRATOR TITLE CHANGE: 66
ROADWAY 67
GEOTECHNICAL 93
GEOENVIRONMENTAL 115
UTILITY CONSTRUCTION 116
UTILITIES BY OTHERS 126
EROSION CONTROL 132
SIGNALS AND INTELLIGENT TRANSPORTATION SYSTEMS 157
RAILROAD ROADBED 242
PROJECT SPECIAL PROVISIONS STRUCTURE / CULVERTS 259

PERMITS R-1

STANDARD SPECIAL PROVISIONS

AVAILABILITY OF FUNDS – TERMINATION OF CONTRACTS 1
NCDOT GENERAL SEED SPECIFICATION FOR SEED QUALITY 2
ERRATA 5
PLANT AND PEST QUARANTINES 7
AWARD OF CONTRACT 8
MINORITY AND FEMALE EMPLOYMENT REQUIREMENTS 9
REQUIRED CONTRACT PROVISIONS FEDERAL - AID CONSTRUCTION CONTRACTS 12
ON-THE-JOB TRAINING 21
MINIMUM WAGES 24

PROPOSAL ITEM SHEET AND SIGNATURE SHEET

ITEM SHEET(S) (TAN SHEETS)
SIGNATURE SHEET (BID ACCEPTANCE BY DEPARTMENT)

PROJECT SPECIAL PROVISIONS

GENERAL

CONTRACT TIME AND LIQUIDATED DAMAGES:

(8-15-00) (Rev. 12-18-07) 108 SP1 G07 A

The date of availability for this contract is **February 3, 2014**, except that work in jurisdictional waters and wetlands shall not begin until a meeting between the DOT, Regulatory Agencies, and the Contractor is held as stipulated in the permits contained elsewhere in this proposal. This delay in availability has been considered in determining the contract time for this project.

The completion date for this contract is **May 15, 2017**.

Except where otherwise provided by the contract, observation periods required by the contract will not be a part of the work to be completed by the completion date and/or intermediate contract times stated in the contract. The acceptable completion of the observation periods that extend beyond the final completion date shall be a part of the work covered by the performance and payment bonds.

The liquidated damages for this contract are **Two Hundred Dollars ($200.00)** per calendar day. These liquidated damages will not be cumulative with any liquidated damages which may become chargeable under Intermediate Contract Time Number 1.

INTERMEDIATE CONTRACT TIME NUMBER 1 AND LIQUIDATED DAMAGES:

(7-1-95) (Rev. 2-21-12) 108 SP1 G13 A

Except for that work required under the Project Special Provisions entitled *Planting, Reforestation* and/or *Permanent Vegetation Establishment*, included elsewhere in this proposal, the Contractor will be required to complete all work included in this contract and shall place and maintain traffic on same.

The date of availability for this intermediate contract time is **February 3, 2014**.

The completion date for this intermediate contract time is **November 16, 2016**.

The liquidated damages for this intermediate contract time are **Two Thousand Dollars ($2,000.00)** per calendar day.

Upon apparent completion of all the work required to be completed by this intermediate date, a final inspection will be held in accordance with Article 105-17 and upon acceptance, the Department will assume responsibility for the maintenance of all work except *Planting, Reforestation* and/or *Permanent Vegetation Establishment*. The Contractor will be responsible for and shall make corrections of all damages to the completed roadway caused by his planting operations, whether occurring prior to or after placing traffic through the project.

INTERMEDIATE CONTRACT TIME NUMBER 2 AND INCENTIVE/DISINCENTIVE:

The Contractor shall complete all required work shown on the plans that is not in conflict with the existing operating track, including installation and maintenance of erosion control, seeding and mulching, clearing & grubbing, undercutting, installation of ditches and pipe necessary for positive drainage, subsurface drainage, grading and compaction of rail bed, access roads and laydown areas, placement of asphalt underlayment, placement and compaction of sub-ballast, and improvements to at-grade crossings or the removal of at-grade crossings or pavement, in accordance with plans and details. Portions of work in this ICT are detailed in the Traffic Management Plans. The station limits for this intermediate contract time are:

-M1- Station 9512+00 to 9569+00,
-Y52- Station 12+00 to 16+00,
-Y53- Station 12+20 to 18+20,
-YL- Station 44+00 to 48+00.

The date of availability for this intermediate contract time is the date the Contractor elects to begin this work.

The completion date for this intermediate contract time is **June 24, 2014**.

It is mutually agreed that time is of the essence in completing **the work as stated above**. It is further mutually agreed a delay in completing this work will result in damage due to increased engineering and inspection costs to the Department of Transportation, great hardship to the general public, public inconvenience, obstruction of traffic, interference with business, and increased cost of maintaining traffic.

By reason of the necessity of expeditious completion of the work **as stated above**, it is mutually agreed, the Contractor shall receive an incentive payment of **Two Thousand Dollars ($2,000.00)** per calendar day for each day prior to **June 24, 2014** that this work is completed. Incentive payment shall be limited to a maximum of **Forty Thousand Dollars ($40,000.00)**. No incentive payment shall be allowed for any calendar day after **June 24, 2014** that this work remains incomplete. This **June 24, 2014** date shall be utilized in determining incentive payments and it shall not be revised for any reason whatsoever. Incentive payment determined to be due the Contractor, shall be paid by the Department within forty-five (45) calendar days after completion of all work. No incentive payment shall be allowed if the contract is terminated under the provisions of Article 108-13 of the *2012 Standard Specifications*.

Disincentive of **Two Thousand Dollars ($2,000.00)** per calendar day shall be assessed the Contractor for each day beyond the completion date the work is not completed.

The Engineer shall withhold the disincentives as they accrue from the amount of monies due on work performed in the contract. The withholding of the disincentives shall be in addition to the normal percentage retained as noted in Article 109-4 of the *2012 Standard Specifications*.

INTERMEDIATE CONTRACT TIME NUMBER 3 AND LIQUIDATED DAMAGES:

The Contractor shall complete all required work shown on the plans that is not in conflict with the operating track that was not completed in **ICT 2** due to conflict with the existing operating track. This work may include but is not limited to installation and maintenance of erosion control, seeding and mulching, clearing & grubbing, undercutting, installation of ditches and pipe necessary for positive drainage, subsurface drainage, grading and compaction of rail bed, access roads and laydown areas, placement of asphalt underlayment, placement and compaction of sub ballast, and improvements to at-grade crossings or the removal of at-grade crossings or pavement, in accordance with plans and details. The station limits for this intermediate contract time are:

-M1- Station 9525+00 to 9569+00.

The date of availability for this intermediate contract time is the date the Contractor elects to begin this work.

The completion date for this intermediate contract time will be the date which is **sixty (60) consecutive calendar days after the Engineer notifies the contractor that NSR has moved train operations to Track -M2- and removed the existing track to allow the contractor to complete the work in ICT 3**

The liquidated damages are **Two Thousand Dollars ($2,000.00)** per calendar day.

INTERMEDIATE CONTRACT TIME NUMBER 4 AND INCENTIVE/DISINCENTIVE:

The Contractor shall complete all required work shown on the plans that is not in conflict with the existing operating track including installation and maintenance of erosion control, seeding and mulching, clearing & grubbing, track removal, undercutting, installation of ditches, subsurface drainage, and pipe necessary for positive drainage, grading and compaction of rail bed, access roads and laydown areas, placement of asphalt underlayment, placement and compaction of sub ballast, improvements to at-grade crossings or the removal of at-grade crossings or pavement, and construction or replacement of fences and guardrail, in accordance with plans and details. Portions of work in this ICT are detailed in the Traffic Management Plans. The station limits for this intermediate contract time are:

-M1- Station 9096+00 to 9275+00 and –A1- Station 9096+00 to 9103+86.06, including industrial sidings –A2-, -A3- and –A4-.
-Y4- Station 10+00 to 16+60.

The date of availability for this intermediate contract time is the date the Contractor elects to begin this work.

The completion date for this intermediate contract time is **July 21, 2014.**

It is mutually agreed that time is of the essence in completing **the work as stated above**. It is further mutually agreed a delay in completing this work will result in damage due to increased engineering and inspection costs to the Department of Transportation, great hardship to the general public, public inconvenience, obstruction of traffic, interference with business, and increased cost of maintaining traffic.

By reason of the necessity of expeditious completion of the work **as stated above**, it is mutually agreed, the Contractor shall receive an incentive payment of **Three Thousand Dollars ($3,000.00)** per calendar day for each day prior to **July 21, 2014** that this work is completed. Incentive payment shall be limited to a maximum of **Ninety Thousand Dollars ($90,000.00)**. No incentive payment shall be allowed for any calendar day after **July 21, 2014** that this work remains incomplete. This **July 21, 2014** date shall be utilized in determining incentive payments and it shall not be revised for any reason whatsoever. Incentive payment determined to be due the Contractor, shall be paid by the Department **within forty-five (45) calendar days after completion of all work.** No incentive payment shall be allowed if the contract is terminated under the provisions of Article 108-13 of the *2012 Standard Specifications*.

Disincentive of **Three Thousand Dollars ($3,000.00)** per calendar day shall be assessed the Contractor for each day beyond the completion date the work is not completed.

The Engineer shall withhold the disincentives as they accrue from the amount of monies due on work performed in the contract. The withholding of the disincentives shall be in addition to the normal percentage retained as noted in Article 109-4 of the *2012 Standard Specifications*.

INTERMEDIATE CONTRACT TIME NUMBER 5 AND LIQUIDATED DAMAGES:

The Contractor shall complete all required work shown on the plans that is not in conflict with the operating track that was not completed in **ICT 4** due to conflict with the existing operating track. This work may include but is not limited to, installation and maintenance of erosion control, seeding and mulching, clearing & grubbing, undercutting, installation of ditches, subsurface drainage, and pipe necessary for positive drainage, grading and compaction of rail bed, access roads and laydown areas, placement of asphalt underlayment, placement and compaction of sub ballast, improvements to at-grade crossings or the removal of at-grade crossings or pavement, and construction or replacement of fences and guardrail, in accordance with plans and details. The station limits for this intermediate contract time are:

-M1- Station 9155+00 to 9170+00.

The date of availability for this intermediate contract time is the date the Contractor elects to begin this work.

The completion date for this intermediate contract time will be the date which is **sixty (60) consecutive calendar days after the Engineer notifies the contractor that NSR has moved train operations to Track -M2- and removed the existing track to allow the contractor to complete the work in ICT 5.**

The liquidated damages are **Two Thousand Dollars ($2,000.00)** per calendar day.

INTERMEDIATE CONTRACT TIME NUMBER 6 AND INCENTIVE/DISINCENTIVE:

The Contractor shall complete all required work shown on the plans that is not in conflict with the existing operating track or existing **E. Thom Street** including installation and maintenance of erosion control, seeding and mulching, clearing & grubbing, undercutting, installation of ditches and pipe necessary for positive drainage, removing existing track, grading and compaction of rail bed, placement and compaction of sub ballast, improvements to at-grade crossings or the removal of at-grade crossings, improvements to highways, city streets or driveways all in accordance with plans and details. The station limits for this intermediate contract time are:

-M1- Station 9275+00 to 9402+00.
-Y6- Station 12+31 to 16+20
-Y7- Station 10+30 to 12+55
-SVC- Station 10+55 to 18+08

The date of availability for this intermediate contract time is the date the Contractor elects to begin this work.

The completion date for this intermediate contract time is **November 17, 2014**.

It is mutually agreed that time is of the essence in completing **the work as stated above**. It is further mutually agreed a delay in completing this work will result in damage due to increased engineering and inspection costs to the Department of Transportation, great hardship to the general public, public inconvenience, obstruction of traffic, interference with business, and increased cost of maintaining traffic.

By reason of the necessity of expeditious completion of the work **as stated above**, it is mutually agreed, the Contractor shall receive an incentive payment of **Five Thousand Dollars ($5,000.00)** per calendar day for each day prior to **November 17, 2014** that this work is completed. Incentive payment shall be limited to a maximum of **One Hundred Fifty Thousand Dollars ($150,000.00)**. No incentive payment shall be allowed for any calendar day after **November 17, 2014** that this work remains incomplete. This **November 17, 2014** date shall be utilized in determining incentive payments and it shall not be revised for any reason whatsoever. Incentive payment determined to be due the Contractor, shall be paid by the Department **within forty-five (45) calendar days after completion of all work.** No incentive payment shall be allowed if the contract is terminated under the provisions of Article 108-13 of the *2012 Standard Specifications*.

Disincentive of **Five Thousand Dollars ($5,000.00)** per calendar day shall be assessed the Contractor for each day beyond the completion date the work is not completed.

The Engineer shall withhold the disincentives as they accrue from the amount of monies due on work performed in the contract. The withholding of the disincentives shall be in addition to the normal percentage retained as noted in Article 109-4 of the *2012 Standard Specifications*.

INTERMEDIATE CONTRACT TIME NUMBER 7 AND INCENTIVE/DISINCENTIVE:

The Contractor shall complete all required work shown on the plans that is not in conflict with the existing operating track including installation and maintenance of erosion control, seeding and mulching, clearing & grubbing, undercutting, installation of ditches and pipe necessary for positive drainage, construction of railroad bridge over proposed Kimball Rd., grading and compaction of rail bed, placement and compaction of sub ballast all in accordance with plans and details. The station limits for this intermediate contract time are:

-M1- Station 9402+00 to 9450+00.

The date of availability for this intermediate contract time is the date the Contractor elects to begin this work.

The completion date for this intermediate contract time is **May 8, 2015**.

It is mutually agreed that time is of the essence in completing **the work as stated above**. It is further mutually agreed a delay in completing this work will result in damage due to increased engineering and inspection costs to the Department of Transportation, great hardship to the general public, public inconvenience, obstruction of traffic, interference with business, and increased cost of maintaining traffic.

By reason of the necessity of expeditious completion of the work **as stated above**, it is mutually agreed, the Contractor shall receive an incentive payment of **Five Thousand Dollars ($5,000.00)** per calendar day for each day prior to **May 8, 2015** that this work is completed. Incentive payment shall be limited to a maximum of **One Hundred Thousand Dollars ($100,000.00)**. No incentive payment shall be allowed for any calendar day after **May 8, 2015** that this work remains incomplete. This **May 8, 2015** date shall be utilized in determining incentive payments and it shall not be revised for any reason whatsoever. Incentive payment determined to be due the Contractor, shall be paid by the Department **within forty-five (45) calendar days after completion of all work.** No incentive payment shall be allowed if the contract is terminated under the provisions of Article 108-13 of the *2012 Standard Specifications*.

Disincentive of **Five Thousand Dollars ($5,000.00)** per calendar day shall be assessed the Contractor for each day beyond the completion date the work is not completed.

The Engineer shall withhold the disincentives as they accrue from the amount of monies due on work performed in the contract. The withholding of the disincentives shall be in addition to the normal percentage retained as noted in Article 109-4 of the *2012 Standard Specifications*.

INTERMEDIATE CONTRACT TIME NUMBER 8 AND LIQUIDATED DAMAGES:

The Contractor shall complete all required work shown on the plans that is not in conflict with the existing operating track, **Reid Farm Road, Peach Orchard Road or Peeler Road** including installation and maintenance of erosion control, seeding and mulching, clearing & grubbing, undercutting, installation of ditches and pipe necessary for positive drainage, pavement removal, grading and compaction of rail bed and access roads, placement and compaction of sub ballast, improvements to at-grade crossings or the removal of at-grade crossings, improvements to highways, city streets or driveways, and construction or replacement of fences and guardrail, in accordance with plans and details. The station limits for this intermediate contract time are:

-M1- Station 9011+00 to 9096+00, including industrial siding –A1-.
-M1- Station 9450+00 to 9512+00.
-Y12- Station 5+85 to 16+00
-Y45- Station 15+10 to 16+60
-Y46- Station 9+68 to 28+90
-Y51- Station 12+00 to 17+68
-YL- Station 13+20 to 18+94

The date of availability for this intermediate contract time is the date the Contractor elects to begin this work.

The completion date for this intermediate contract time is **May 1, 2015**.

The liquidated damages are **Three Thousand Dollars ($3,000.00)** per calendar day.

INTERMEDIATE CONTRACT TIME NUMBER 9 AND LIQUIDATED DAMAGES:

The Contractor shall complete all required work associated with the closures of the existing **Reid Farm Road, Peach Orchard Road and Peeler Road** crossings shown on the plans that is not in conflict with the existing operating track, including installation and maintenance of erosion control, seeding and mulching, clearing & grubbing, installation of ditches and pipe necessary for positive drainage, pavement removal, grading and compaction of rail bed, and placement and compaction of sub ballast, in accordance with plans and details. The station limits for this intermediate contract time are:

-M1- Station 9035+50 to 9036+50 (Reid Farm Road)
-M1- Station 9059+50 to 9060+50 (Peach Orchard Road)
-M1- Station 9095+00 to 9096+00 (Peeler Road)

The date of availability for this intermediate contract time is the date the Engineer notifies the Contractor of the completion of **Phase III of P-5206A**.

The completion date for this intermediate contract time is the date which is **fifteen (15)** consecutive calendar days after the date the Contractor receives the notification from the Engineer.

The liquidated damages are **Five Hundred Dollars ($500.00)** per calendar day.

INTERMEDIATE CONTRACT TIME NUMBER 10 AND LIQUIDATED DAMAGES:

The Contractor shall complete all required work shown on the plans that was not completed in **ICT 6** and that is not in conflict with the operating track including installation and maintenance of erosion control, seeding and mulching, clearing & grubbing, undercutting, installation of ditches and pipe necessary for positive drainage, grading and compaction of rail bed, placement and compaction of sub ballast, improvements to at-grade crossings or the removal of at-grade crossings, improvements to highways, city streets or driveways all in accordance with plans and details. The station limits for this intermediate contract time are:

-Y7- Station 12+55 to 14+10
-M1- Station 9334+00 to 9336+00

The date of availability for this intermediate contract time is the date the Engineer notifies the Contractor that NSR has removed the existing track **through Centerview Street (-Y7-).**

The completion date for this intermediate contract time will be the date which is **forty-five (45) consecutive calendar days after the Engineer notifies the contractor that NSR has removed the existing track through Centerview Street (-Y7-) to allow the contractor to complete the work in ICT 10.**

The liquidated damages are **One Thousand Five Hundred Dollars ($1,500.00)** per calendar day.

INTERMEDIATE CONTRACT TIME NUMBER 11 AND LIQUIDATED DAMAGES:

The Contractor shall complete all required work to open Kimball Road to traffic, and close **the E. Thom Street and N. Central Avenue at-grade railroad crossings to traffic**. The station limits for this intermediate contract time are:

-Y10- Station 10+08 to 21+79
-YJ- Station 10+96 to 13+13

The date of availability for this intermediate contract time is the date the Contractor elects to begin this work.

The completion date for this intermediate contract time will be the date which is **sixty (60) consecutive calendar days after the Engineer notifies the contractor that NSR has moved train operations to Track -M1- across the Kimball Road bridge and removed the existing track to allow the contractor to complete the work in ICT 11.**

The liquidated damages are **One Thousand Five Hundred Dollars ($1,500.00)** per calendar day.

INTERMEDIATE CONTRACT TIME NUMBER 12 AND LIQUIDATED DAMAGES:
(2-20-07) 108 SP1 G14 B

For P-5206B, the Contractor shall not narrow or close a lane of traffic on **any road**, detain and /or alter the traffic flow on or during holiday weekends, special events, or any other time when traffic is unusually heavy, including the following schedules:

HOLIDAY AND HOLIDAY WEEKEND LANE CLOSURE RESTRICTIONS

1. For **unexpected occurrence** that creates unusually high traffic volumes, as directed by the Engineer.

2. For **New Year's Day**, between the hours of **4:00 P.M.** December 31st and **9:00 A.M.** January 2nd. If New Year's Day is on a Friday, Saturday, Sunday or Monday, then until **9:00 A.M.** the following Tuesday.

3. For **Easter**, between the hours of **4:00 P.M.** Thursday and **9:00 A.M.** Monday.

4. For **Memorial Day**, between the hours of **4:00 P.M.** Friday and **9:00 A.M.** Tuesday.

5. For **Independence Day**, between the hours of **4:00 P.M.** the day before Independence Day and **9:00 A.M.** the day after Independence Day.

   If **Independence Day** is on a Friday, Saturday, Sunday or Monday, then between the hours of **4:00 P.M.** the Thursday before Independence Day and **9:00 A.M.** the Tuesday after Independence Day.

6. For **Labor Day**, between the hours of **4:00 P.M.** Friday and **9:00 A.M.** Tuesday.

7. For **Thanksgiving Day**, between the hours of **4:00 P.M.** Tuesday and **9:00 A.M.** Monday.

8. For **Christmas**, between the hours of **4:00 P.M.** the Friday before the week of Christmas Day and **9:00 A.M.** the following Tuesday after the week of Christmas Day.

Holidays and holiday weekends shall include New Year's, Easter, Memorial Day, Independence Day, Labor Day, Thanksgiving, and Christmas. The Contractor shall schedule his work so that lane closures are not required during these periods, unless otherwise directed by the Engineer.

The time of availability for this intermediate contract work shall be the time the Contractor begins to install all traffic control devices for lane closures according to the time restrictions listed herein.

The completion time for this intermediate contract work shall be the time the Contractor is required to complete the removal of all traffic control devices for lane closures according to the time restrictions stated herein and place traffic in the existing traffic pattern.

The liquidated damages are **One Thousand Dollars ($1,000.00)** per hour.

INTERMEDIATE CONTRACT TIME NUMBER 13 AND LIQUIDATED DAMAGES:
(2-20-07) 108 SP1 G14 A

For P-5206C, the Contractor shall complete the required work of installing, maintaining, and removing the traffic control devices for lane closures and restoring traffic to the existing traffic pattern.

In addition, the Contractor shall not close or narrow a lane of traffic on **ANY ROAD**, detain and/or alter the traffic flow on or during holidays, holiday weekends, special events, or any other time when traffic is unusually heavy, including the following schedules:

HOLIDAY AND HOLIDAY WEEKEND LANE CLOSURE RESTRICTIONS

1. For **unexpected occurrence** that creates unusually high traffic volumes, as directed by the Engineer.

2. For **New Year's Day**, between the hours of **4:00 P.M.** December 31st and **9:00 A.M.** January 2nd. If New Year's Day is on a Friday, Saturday, Sunday or Monday, then until **9:00 A.M.** the following Tuesday.

3. For **Easter**, between the hours of **4:00 P.M.** Thursday and **9:00 A.M.** Monday.

4. For **Memorial Day**, between the hours of **4:00 P.M.** Friday and **9:00 A.M.** Tuesday.

5. For **Independence Day**, between the hours of **4:00 P.M.** the day before Independence Day and **9:00 A.M.** the day after Independence Day.

   If **Independence Day** is on a Friday, Saturday, Sunday or Monday, then between the hours of **4:00 P.M.** the Thursday before Independence Day and **9:00 A.M.** the Tuesday after Independence Day.

6. For **Labor Day**, between the hours of **4:00 P.M.** Friday and **9:00 A.M.** Tuesday.

7. For **Thanksgiving Day**, between the hours of **4:00 P.M.** Tuesday and **9:00 A.M.** Monday.

8. For **Christmas**, between the hours of **4:00 P.M.** the Friday before the week of Christmas Day and **9 A.M.** the following Tuesday after the week of Christmas Day.

9. For **Farmers Day Festival**, between the hours of **4:00 P.M.** the **Day before Farmers Day Festival** and **9:00 A.M.** the following **Day** after **Farmers Day Festival**.

Holidays and holiday weekends shall include New Year's, Easter, Memorial Day, Independence Day, Labor Day, Thanksgiving, and Christmas. The Contractor shall schedule his work so that lane closures will not be required during these periods, unless otherwise directed by the Engineer.

The time of availability for this intermediate contract work shall be the time the Contractor begins to install all traffic control devices for lane closures according to the time restrictions listed herein.

The completion time for this intermediate contract work shall be the time the Contractor is required to complete the removal of all traffic control devices for lane closures according to the time restrictions stated above and place traffic in the existing traffic pattern.

The liquidated damages are **One Thousand Dollars ($1,000.00)** per hour.

INTERMEDIATE CONTRACT TIME NUMBER 14 AND LIQUIDATED DAMAGES:
(2-20-07) 108 SP1 G14 A

For P-5206D, the Contractor shall complete the required work of installing, maintaining, and removing the traffic control devices for lane closures and restoring traffic to the existing traffic pattern. The Contractor shall not close or narrow a lane of traffic on **MAIN STREET (-YL-), RYDER AVENUE (-Y12-), CHAPEL STREET (-Y51-), or CENTRAL AVE (-Y45-/-Y46-)** during the following time restrictions:

DAY AND TIME RESTRICTIONS

Monday thru Friday 7:00 AM to 9:00 AM and 4:00 PM to 7:00 PM

In addition, the Contractor shall not close or narrow a lane of traffic on **MAIN STREET (-YL-), RYDER AVENUE (-Y12-), CHAPEL STREET (-Y51-), or CENTRAL AVE (-Y45-/-Y46-),** detain and/or alter the traffic flow on or during holidays, holiday weekends, special events, or any other time when traffic is unusually heavy, including the following schedules:

HOLIDAY AND HOLIDAY WEEKEND LANE CLOSURE RESTRICTIONS

1. For **unexpected occurrence** that creates unusually high traffic volumes, as directed by the Engineer.

2. For **New Year's Day**, between the hours of 7:00 AM December 31st and 7:00 PM January 2nd. If New Year's Day is on a Friday, Saturday, Sunday or Monday, then until 7:00 PM the following Tuesday.

3. For **Easter**, between the hours of 7:00 AM Thursday and 7:00 PM Monday.

4. For **Memorial Day**, between the hours of 7:00 AM Friday and 7:00 PM Tuesday.

5. For **Independence Day**, between the hours of 7:00 AM the day before Independence Day and 7:00 PM the day after Independence Day.

   If **Independence Day** is on a Friday, Saturday, Sunday or Monday, then between the hours of 7:00 AM the Thursday before Independence Day and 7:00 PM the Tuesday after Independence Day.

6. For **Labor Day**, between the hours of 7:00 AM Friday and 7:00 PM Tuesday.

7. For **Thanksgiving Day**, between the hours of 7:00 AM Tuesday and 7:00 PM Monday.

8. For **Christmas**, between the hours of 7:00 AM the Friday before the week of Christmas Day and 7:00 PM the following Tuesday after the week of Christmas Day.

Holidays and holiday weekends shall include New Year's, Easter, Memorial Day, Independence Day, Labor Day, Thanksgiving, and Christmas. The Contractor shall schedule his work so that lane closures will not be required during these periods, unless otherwise directed by the Engineer.

The time of availability for this intermediate contract work shall be the time the Contractor begins to install all traffic control devices for lane closures according to the time restrictions listed herein.

The completion time for this intermediate contract work shall be the time the Contractor is required to complete the removal of all traffic control devices for lane closures according to the time restrictions stated above and place traffic in the existing traffic pattern.

The liquidated damages are **One Thousand Dollars ($1000.00)** per hour.

INTERMEDIATE CONTRACT TIME NUMBER 15 AND LIQUIDATED DAMAGES:

For P-5206D, the Contractor shall complete the work required of **Phase I – Area 2, Steps 2 thru 4** as shown on Sheet **TMP- 3** and shall place and maintain traffic on same.

The date of availability for this intermediate contract time is the date the Contractor elects to begin the work.

The completion date for this intermediate contract time is the date which is **forty-five (45)** consecutive calendar days after and including the date the Contractor begins this work.

The liquidated damages are **One Thousand Dollars ($ 1,000.00)** per calendar day.

INTERMEDIATE CONTRACT TIME NUMBER 16 AND LIQUIDATED DAMAGES:
(2-20-07) (Rev. 6-18-13) 108 SP1 G14 H

For P-5206C, the Contractor shall complete the work required of **Phase I** as shown on Sheet(s) **TMP- 2** and shall place and maintain traffic on same.

The date of availability for this intermediate contract time is the date the Contractor elects to begin the work.

The completion date for this intermediate contract time is the date which is **one hundred and sixty (160)** consecutive calendar days after and including the date the Contractor begins this work.

The liquidated damages are **One Thousand Dollars ($ 1,000.00)** per calendar day.

RAILROAD COORDINATION:

The Contractor's attention is directed to the plans and the Intermediate Contract Times (ICT) Special Provisions. Norfolk Southern Railway (NSR) requires a specific advance notice **four (4) weeks** before each instance that the Contractor anticipates modification or removal of existing track, railroad signals, or track or signal appurtenances is required to be completed by NSR to allow for the Contractor's planned work.

An advance notice is required by NSR **twelve (12) weeks** ahead of the Contractor's anticipated completion of **ICT #2**, which includes the railroad roadbed grading required for NSR to complete construction of -M2- track and shift train operations onto the proposed track. From the completion of **ICT #2** it is anticipated NSR will require a minimum of **ten (10) weeks** and a maximum of **eighteen (18) weeks** to construct the new -M2- track, move train operations to the new track, and remove the existing track as well as all track accessories to allow the contractor to proceed with work in **ICT #3**. Duration of this work is dependent on how accurate the advance notice of completion of **ICT #2** is and how much roadbed has been completed, accepted and provided to NSR for track construction prior to the completion of **ICT #2**.

NSR will give an advance notice through the Engineer no less than **twenty-eight (28) calendar days** ahead of the anticipated final date of removal of track and accessories.

An advance notice is required by NSR **six (6) weeks** ahead of the Contractor's anticipated completion of **ICT #4**, which includes the railroad roadbed grading required for NSR to complete construction of -M2- track and shoo-fly. From the completion of **ICT #4**, it is anticipated NSR will require **a minimum of eight (8) weeks and a maximum of fifteen (15) weeks** to construct the new -M2- track and shoo-fly, move train operations to the new track, and remove the existing track as well as all track accessories to allow the contractor to proceed with work in **ICT #5**. Duration of this work is dependent on how accurate the advance notice of completion of **ICT #4** is and how much roadbed has been completed, accepted and provided to NSR for track construction prior to the completion of **ICT #4**.

NSR will give an advance notice through the Engineer no less than **twenty-eight (28) calendar days** ahead of the anticipated final date of removal of track and accessories.

An advance notice is required by NSR **four (4) weeks** ahead of the Contractor's anticipated completion of **ICT #6**, which includes the railroad roadbed grading required for NSR to construct new -M1- and -M2- tracks within the limits shown for **ICT #6**.

An advance notice is required by NSR **eight (8) weeks** ahead of the Contractor's anticipated completion of **ICT #7**, which includes the new railroad bridge and railroad roadbed grading required for NSR to complete construction of new -M1- track across the bridge. From the completion of **ICT #7**, it is anticipated NSR will require **a minimum of seven (7) weeks and a maximum of eleven (11) weeks to complete construction** of new -M1- track across the bridge, move train operations to the new track, and remove the existing main track as well as all track accessories to allow the contractor to proceed with work in **ICT #11** and re-grading of existing trackbed to match the typical section in the plans. Duration of this work is dependent on the accuracy of the advance notice of completion of **ICT #7**.

NSR will give an advance notice through the Engineer no less than **twenty-eight (28) calendar days** ahead of the anticipated final date of removal of track and accessories.

An advance notice is required by NSR **four (4) weeks** ahead of the Contractor's anticipated completion of **ICT #8**, which includes the railroad roadbed grading required for NSR to complete construction of -M1- and -M2- tracks within the limits shown for **ICT #8.**

NSR will give an advance notice through the Engineer no less than **twenty-eight (28) calendar days** ahead of the anticipated date of completion of track construction or removal through each area allowing the Contractor to complete re-grading the existing track roadbed to the proposed typical.

All notices to the railroad shall be given to the Engineer.

MANDATORY PRE-BID CONFERENCE (Prequalifying To Bid):
(7-18-06) (Rev. 3-25-13) SPI 1-14(Rev)

In order for all prospective bidders to have an extensive knowledge of the project, all prospective bidders shall attend a mandatory pre-bid conference on Friday, September 27, 2013 from 9:00 a.m. to 11:00 a.m. at:

NCDOT Highway Division 9, District 1 Office
4770 South Main Street
Salisbury, NC 28147
(704) 639-7560

The pre-bid conference will include a thorough discussion of the plans, contract pay items, special provisions, etc.

Only bidders who have attended and properly registered at the above scheduled pre-bid conference and who have met all other prequalification requirements will be considered prequalified to bid on this project. A bid received from a bidder who has not attended and properly registered at the above scheduled pre-bid conference will not be accepted and considered for award.

Attendance at the pre-bid conference will not meet the requirements of proper registration unless the individual attending has registered at the pre-bid conference in accordance with the following:

(A) The individual has signed his name on the official roster no later than thirty (30) minutes after the above noted time for the beginning of the conference.

(B) The individual has written in the name and address of the company he or she represents.

(C) Only one company has been shown as being represented by the individual attending.

(D) The individual attending is an officer or permanent employee of the company they are representing.

Attendance at any prior pre-bid conference will not meet the requirement of this provision.

For all interested contractors, an optional site visit has been scheduled to take place following the Mandatory Pre-Bid Conference. Details of this site visit are available on the NCDOT Bidding and Letting webpage.

PERMANENT VEGETATION ESTABLISHMENT:

(2-16-12) (Rev. 10-15-13) 104 SP1 G16

Establish a permanent stand of the vegetation mixture shown in the contract. During the period between initial vegetation planting and final project acceptance, perform all work necessary to establish permanent vegetation on all erodible areas within the project limits, as well as, in borrow and waste pits. This work shall include erosion control device maintenance and installation, repair seeding and mulching, supplemental seeding and mulching, mowing, and fertilizer topdressing, as directed. All work shall be performed in accordance with the applicable section of the *2012 Standard Specifications*. All work required for initial vegetation planting shall be performed as a part of the work necessary for the completion and acceptance of the Intermediate Contract Time (ICT). Between the time of ICT and Final Project acceptance, or otherwise referred to as the vegetation establishment period, the Department will be responsible for preparing the required National Pollutant Discharge Elimination System (NPDES) inspection records.

Once the Engineer has determined that the permanent vegetation establishment requirement has been achieved at an 80% vegetation density (the amount of established vegetation per given area to stabilize the soil) and no erodible areas exist within the project limits, the Contractor will be notified to remove the remaining erosion control devices that are no longer needed. The Contractor will be responsible for, and shall correct any areas disturbed by operations performed in permanent vegetation establishment and the removal of temporary erosion control measures, whether occurring prior to or after placing traffic on the project.

Payment for *Response for Erosion Control, Seeding and Mulching, Repair Seeding, Supplemental Seeding, Mowing, Fertilizer Topdressing, Silt Excavation,* and *Stone for Erosion Control* will be made at contract unit prices for the affected items. Work required that is not represented by contract line items will be paid in accordance with Articles 104-7 or 104-3 of the *2012 Standard Specifications*. No additional compensation will be made for maintenance and removal of temporary erosion control items.

DELAY IN RIGHT OF ENTRY (P-5206B):
(7-1-95) 108 SP1 G22 B

The Contractor will not be allowed right of entry to the following parcels prior to the listed dates unless otherwise permitted by the Engineer.

Parcel No.	Property Owner	Date
002B	Mark Stout	2/3/14
003B-A	Corrine Stiller Demarcus	2/3/14
003B-BZ	Jimmie C. Higgins	2/3/14
008B	Daryl R. Allen	1/3/14
010B	Nellie L. Myers	12/3/13
011B	George Bradshaw	2/3/14
012B	George Bradshaw	4/3/14
013B	Essroc Cement Corp	12/3/13
015B	Universal Forest Products Eastern Company, Inc.	12/3/13
016B	Universal Forest Products Eastern Company, Inc.	12/3/13
017B	Robert William Gainer	12/3/13
018B	Universal Forest Products Eastern Company, Inc.	12/3/13
026B	Henry Vaneseltine	12/3/13
027B	Henry Vaneseltine	12/3/13
028B	Saundra Hoffner & Brandi Sloop	12/3/13
029B	Tyler North America	12/3/13
030B	Rowan Bolt & Supply Inc.	12/3/13

DELAY IN RIGHT OF ENTRY (P-5206C):
(7-1-95) 108 SP1 G22 B

The Contractor will not be allowed right of entry to the following parcels prior to the listed dates unless otherwise permitted by the Engineer.

Parcel No.	Property Owner	Date
003C	Walter Harding	1/3/14
004C	Grove Supply Co. Inc.	2/3/14
005C	Keystone North Carolina	2/3/14
006C	Larry Stewart Haynes	2/3/14
008C	Jeffery O'Brien Atkins	2/3/14
011C	William A. Ritchie	12/3/13
012C	Michael Dial	12/3/13
015C	Rowan Health Services	12/3/13
016C	Raymond Lassiter, DDS	2/3/14
018C	Larry Stirewalt	2/3/14
019C	Gerald W. Starnes	2/3/14
020C	Thomas L. Graver	12/3/13
025C	Rowan Health services	12/3/13
026C	Eva Stewart	2/3/14
027C	Eva Stewart	2/3/14

Parcel No.	Property Owner	Date
028C	Allen Welter	2/3/14
030C	Luthern Chapel Church	12/3/13
031C	Mt. Zion United Church of Christ	12/3/13
034C	Concord Telephone Co.	12/3/13
036C	Elbert S. Efird	2/3/14
037C	BITTLE DEAL	1/3/14
038C	Mt. Zion Church of Christ	12/3/13
039C	Dayvault Family Limited	12/3/13
040C	James E. Kimball	12/3/13
043C	Mt. Zion Church of Christ	12/3/13
045C	The Plumbing Shoppe, Inc.	12/3/13
052C	Copart of Conn.	12/3/13
053C	Billie R. Stripling & Copart	12/3/13
054C	Billy Gray Bowan	12/3/13
055C	Town of China Grove	12/3/13
058C	China Grove Partners, Inc.	12/3/13
059C	Huffman investments	12/3/13
061C	Carol Deanne	12/3/13
063C	Randy Fleming	12/3/13
065C	Primojustice Properties, LLC	12/3/13
003C	Walter Harding	1/3/14
004C	Grove Supply Co. Inc	2/3/14
005C	Keystone North Carolina	2/3/14
006C	Larry Stewart Haynes	2/3/14
008C	Jeffery O'Brien Atkins	2/3/14
011C	William A. Ritchie	12/3/13
012C	Michael Dial	12/3/13
015C	Rowan Health Services	12/3/13
016C	Raymond Lassiter, DDS	2/3/14
018C	Larry Stirewalt	2/3/14
019C	Gerald W. Starnes	2/3/14
020C	Thomas L. Graver	12/3/13
025C	Rowan Health services	12/3/13
026C	Eva Stewart	2/3/14
027C	Eva Stewart	2/3/14
028C	Allen Welter	2/3/14
030C	Luthern Chapel Church	12/3/13
031C	Mt. Zion United Church of Christ	12/3/13
034C	Concord Telephone Co.	12/3/13
036C	Elbert S. Efird	2/3/14
037C	Bittle Deal	1/3/14
038C	Mt. Zion Church of Christ	12/3/13
039C	Dayvault Family Limited	12/3/13
040C	James E. Kimball	12/3/13

Parcel No.	Property Owner	Date
043C	Mt. Zion Church of Christ	12/3/13
045C	The Plumbing Shoppe, Inc	12/3/13
052C	Copart of Conn.	12/3/13
053C	Billie R. Stripling & Copart	12/3/13
054C	Billy Gray Bowan	12/3/13
055C	Town of China Grove	12/3/13
058C	China Grove Partners,Inc	12/3/13
059C	Huffman investments	12/3/13
061C	Carol Deanne	12/3/13
063C	Randy Fleming	12/3/13
065C	Primojustice Properties, LLC	12/3/13

DELAY IN RIGHT OF ENTRY (P-5206D):
(7-1-95) 108 SP1 G22 B

The Contractor will not be allowed right of entry to the following parcels prior to the listed dates unless otherwise permitted by the Engineer.

Parcel No.	Property Owner	Date
007D	Blackwelder Park Baptist Church	3/3/14
18D	Linda J. Leonard	2/3/14
022D	William Boyd Goodman	2/3/14
024D	Justin Mills	2/3/14
064D	Broadway Associates	1/3/14
065D	Farrell A. James	1/3/14
079D	Estate of Gene F. Davis	1/3/14
080D	Bellena, LLC	1/3/14
083D	Frank Eugene Weddington	1/3/14
084D	David Espy Lambert	2/3/14
085D	David Moore	2/3/14
086D	Derrick Lee Van Pelt	1/3/14
087D	Greg Stamey	1/3/14
091D	Richard D. Effird	1/3/14
092D	Quentin Williamson, et al.	2/3/14
093D	Quentin Williamson, et al.	2/3/14
094D	Ralph Pavero	2/3/14
096D	David Leonard	1/3/14
100D	Howard D. Durham	2/3/14
101D	Janette H. Bame	2/3/14
102D	Prince of Pizza, inc	23/14
103D	Merchant's Distributors	2/3/14
104D	Carolina Comfort Heating & Air Conditioning	2/3/14
105D	Thomas R. Leebrick	2/3/14
106D	Diane Reid Troutman	2/3/14
107D	Rodney G. Holbrooks	2/3/14

Parcel No.	Property Owner	Date
108D	Iron Masters LLC	2/3/14
109D	George Bannett	1/3/14
110D	Aldo Products Co., Inc.	2/3/14
111D	Gwyn David Hartsoe	1/3/14
112D	Deutse Bank	1/3/14
114D	Kannapolis Service Co., LLC	2/3/14
120D	John Allen Hall	2/3/14
121D	Eddie Durham	2/3/14

PROGRESS SCHEDULE (RAIL):
(2-19-13) SP1 G25

The Contractor shall prepare and submit for review and approval a Progress Schedule as set forth in Section 108 of the *Standard Specification*, the Railroad Coordination Special Provision, and as amended herein.

The schedule shall include activity descriptions with beginning and ending dates, partial completion (in percentage or time format). Railroad roadbed activities should include beginning and ending stations of roadbed section. The schedule shall include activities or milestones indicating when NSR flagmen and construction forces should be mobilized to the site.

In addition to those requirements listed above and in Section 108 of the *Standard Specifications*, the Contractor shall include the following activities or milestones in the schedules, where applicable:

(A) Beginning and ending dates for each phase or section of railroad roadbed work.

(B) Expected beginning and ending dates for each phase of track work required to be performed by NSR, based on the durations indicated in the Railroad Coordination Special Provision or as coordinated with the Engineer and Railroad Engineer.

(C) Dates when flagging for railroad protection is required and expected type of flagging required, as coordinated with the Engineer and Railroad Engineer.
(D) Dates (and durations, if temporary) for closures of at-grade crossings.
(E) Completion dates for highway projects and railroad roadbed projects if separate completion dates are anticipated/required.
(F) Anticipated dates for removal of erosion control devices.

The Contractor shall continue to submit to the Engineer a schedule on a monthly basis until the work is substantially complete. If no changes are required to the schedule dates, the Contractor shall resubmit the previous month's schedule with a revised submittal date and updated percent partial completion.

MAJOR CONTRACT ITEMS:
(2-19-02) 104 SP1 G28

The following listed items are the major contract items for this contract (see Article 104-5 of the *2012 Standard Specifications*):

Line #	Description
107	SUB-BALLAST

SPECIALTY ITEMS:
(7-1-95)(Rev. 1-17-12) 108-6 SP1 G37

Items listed below will be the specialty items for this contract (see Article 108-6 of the *2012 Standard Specifications*).

Line #	Description
92 thru 97	Guardrail
98 thru 102	Fencing
108 thru 114	Signing
127 thru 134	Long-Life Pavement Markings
144	Permanent Pavement Markers
145 thru 184	Utility Construction
185 thru 215	Erosion Control
216 thru 245	Signals/ITS System

FUEL PRICE ADJUSTMENT:
(11-15-05) (Rev. 1-17-12) 109-8 SP1 G43(REV.)

Revise the *2012 Standard Specifications* as follows:

Page 1-83, Article 109-8, Fuel Price Adjustments, add the following:

The base index price for DIESEL #2 FUEL is **$3.2446** per gallon. Where any of the following are included as pay items in the contract, they will be eligible for fuel price adjustment.

The pay items and the fuel factor used in calculating adjustments to be made will be as follows:

Description	Units	Fuel Usage Factor Diesel
Unclassified Excavation	Gal/CY	0.29
Borrow Excavation	Gal/CY	0.29
Class IV Subgrade Stabilization	Gal/Ton	0.55
Aggregate Base Course	Gal/Ton	0.55
Sub-Ballast	Gal/Ton	0.55
Asphalt Concrete Base Course, Type ____	Gal/Ton	2.90
Asphalt Concrete Intermediate Course, Type ____	Gal/Ton	2.90
Asphalt Concrete Surface Course, Type ____	Gal/Ton	2.90
Open-Graded Asphalt Friction Course	Gal/Ton	2.90
Sand Asphalt Surface Course, Type ____	Gal/Ton	2.90
Aggregate for Cement Treated Base Course	Gal/Ton	0.55
Portland Cement for Cement Treated Base Course	Gal/Ton	0.55
__" Portland Cement Concrete Pavement	Gal/SY	0.245
Concrete Shoulders Adjacent to __" Pavement	Gal/SY	0.245

SCHEDULE OF ESTIMATED COMPLETION PROGRESS:
(7-15-08) (Rev. 5-21-13) 108-2 SP1 G58

The Contractor's attention is directed to the Standard Special Provision entitled *Availability of Funds Termination of Contracts* included elsewhere in this proposal. The Department of Transportation's schedule of estimated completion progress for this project as required by that Standard Special Provision is as follows:

Fiscal Year		Progress (% of Dollar Value)
2014	(7/01/13 - 6/30/14)	22% of Total Amount Bid
2015	(7/01/14 - 6/30/15)	43% of Total Amount Bid
2016	(7/01/15- 6/30/16)	28% of Total Amount Bid
2017	(7/01/16 - 6/30/17)	7% of Total Amount Bid

The Contractor shall also furnish his own progress schedule in accordance with Article 108-2 of the *2012 Standard Specifications*. Any acceleration of the progress as shown by the Contractor's progress schedule over the progress as shown above shall be subject to the approval of the Engineer.

DISADVANTAGED BUSINESS ENTERPRISE FOR RAILROAD PIEDMONT IMPROVEMENT PLAN (PIP):
(12-18-12) (Rev. 5-21-13) 102-15(J) SP1 G64

Description

The purpose of this Special Provision is to promote the solicitation and use of disadvantaged minority and woman-owned businesses in the rail PIP projects let by the Department of Transportation.

Definitions

Aspirational Goal - The portion of the total contract, expressed as a percentage, that is foreseeable to be performed by DBE subcontractors.

Disadvantaged Business Enterprise (DBE) - A firm certified as a Disadvantaged Business Enterprise through the North Carolina Unified Certification Program.

Pledged DBE Subcontractor - Any DBE submitted at the time of bid that is being used to meet the DBE aspirational goal.

Pledged DBE Goal - The DBE participation at time of award, as determined by the amount of pledged DBE participation submitted.

Confirmation Letter - Written documentation from the Department to the bidder confirming the Contractor's approved, pledged DBE participation along with the listing of the DBE firms.

Manufacturer - A firm that operates or maintains a factory or establishment that produces on the premises, the materials or supplies obtained by the Contractor.

Regular Dealer - A firm that owns, operates, or maintains a store, warehouse, or other establishment in which the materials or supplies required for the performance of the contract are brought, kept in stock, and regularly sold to the public in the usual course of business. A regular dealer engages in, as its principal business and in its own name, the purchase and sale or lease of the products in question. A regular dealer in such bulk items as steel, cement, gravel, stone, and petroleum products need not keep such products in stock, if it owns and operates distribution equipment for the products. Brokers and packagers are not regarded as manufacturers or regular dealers within the meaning of this section.

North Carolina Unified Certification Program (NCUCP) - A program that provides comprehensive services and information to applicants for DBE certification, such that an applicant is required to apply only once for a DBE certification that will be honored by all recipients of USDOT funds in the state.

Forms and Websites Referenced in this Provision

Affidavit A - Listing of Good Faith Efforts - Form signed by bidder listing good faith efforts performed. This form is required if the lowest responsive and responsible bidder fails to meet or exceed the aspirational goal.
http://files.www.piedmontrail.biz/primary-navigation/prequalification-requirements/PIP_DBE_provision.pdf

DBE Payment Tracking System - On-line system in which the Contractor enters the payments made to DBE subcontractors who have performed work on the project. https://apps.dot.state.nc.us/Vendor/PaymentTracking/

DBE-IS *Subcontractor Payment Information* - Form for reporting the payments made to all DBE firms working on the project. This form is for paper bid projects only. http://www.ncdot.org/doh/forms/files/DBE-IS.xls

RF-1 *DBE Replacement Request Form* - Form for replacing a committed DBE. http://connect.ncdot.gov/projects/construction/Construction%20Forms/DBE%20MBE%20WBE%20Replacement%20Request%20Form.pdf

SAF *Subcontract Approval Form* - Form required for approval to sublet the contract. http://connect.ncdot.gov/projects/construction/Construction%20Forms/Subcontract%20Approval%20Form%20Rev.%202012.zip

JC-1 *Joint Check Notification Form* - Form and procedures for joint check notification. The form acts as a written joint check agreement among the parties providing full and prompt disclosure of the expected use of joint checks. http://connect.ncdot.gov/projects/construction/Construction%20Forms/Joint%20Check%20Notification%20Form.pdf

Letter of Intent - Form signed by the Contractor and the DBE subcontractor, manufacturer or regular dealer that affirms that a portion of said contract is going to be performed by the signed DBE for the amount listed at the time of bid. http://connect.ncdot.gov/letting/LetCentral/Letter%20of%20Intent%20to%20Perform%20as%20a%20Subcontractor.pdf

Listing of DBE Subcontractors Form - Form for entering DBE subcontractors on a project that will meet this DBE goal. This form is for paper bids only. http://connect.ncdot.gov/municipalities/Bid%20Proposals%20for%20LGA%20Content/08%20DBE%20Subcontractors%20(Federal).doc

Aspirational DBE Goal

In line with the federal aspirational goal, the following DBE aspirational goal for participation by Disadvantaged Business Enterprises is established for this contract:

Disadvantaged Business Enterprises **10.0** %

Even though the goal is aspirational, the expectation is that the Contractor shall exercise all reasonable steps to achieve the goal. Such steps include, but are not limited to:

(A) Clearly defining and disseminating information to DBEs on portions of the work that is available on the project so DBEs are provided an equitable opportunity to participate on the PIP contracts let by the Department.

(B) Solicit through reasonable and available means to try and achieve the aspirational goal.

(C) Providing adequate information and arranging a location for the review of plans, specifications and requirements of the contract.

(D) Providing assistance to DBEs in overcoming barriers such as the inability to obtain bonding, lines of credit, insurance, materials, equipment or related assistance or services.

Directory of Transportation Firms (Directory)

Real-time information is available about firms doing business with the Department and firms that are DBE certified through the NC UCP in the NCDOT Directory of Transportation Firms. Only firms identified in the Directory as DBE certified shall be used to meet the aspirational DBE goal of the project. The Directory can be found at the following link:
https://partner.ncdot.gov/VendorDirectory/default.html

The listing of an individual firm in the directory shall not be construed as an endorsement of the firm's capability to perform the work.

Listing of DBE Subcontractors

At the time of bid, bidders shall submit all the DBE participation that they anticipate to use during the life of the contract. Since the Rail DBE program is race and gender-neutral, all participation up to and over the 10% aspirational goal will be used toward the Department's race and gender-neutral goal for rail projects. Only those firms with current DBE certification at the time of bid opening will be acceptable for listing in the bidder's submittal of DBE participation. The bidder shall indicate the following required information:

(A) Electronic Bids

Bidders shall submit a listing of DBE participation in the appropriate section of Expedite, the bidding software of Bid Express®.

(1) Submit the names and addresses of DBE firms identified to participate in the contract. If the bidder uses the updated listing of DBE firms shown in Expedite, the bidder may use the dropdown menu to access the name and address of the DBE firm.

(2) Submit the contract line numbers of work to be performed by each DBE firm. When no figures or firms are entered, the bidder will be considered to have no DBE participation.

(3) The bidder shall be responsible for ensuring that the DBE is certified at the time of bid by checking the Directory of Transportation Firms. If the firm is not certified at the time of the bid-letting, that DBE's participation will not count towards achieving the aspirational DBE goal.

(B) Paper Bids

(1) Bidders, at the time the bid proposal is submitted, shall submit a listing of DBE participation, including the names and addresses on the Listing of DBE Subcontractors form.

(2) The bidder shall be responsible for ensuring that the DBE is certified at the time of bid by checking the Directory of Transportation Firms. If the firm is not certified at the time of the bid-letting, that DBE's participation will not count towards achieving the aspirational DBE goal.

DBE Prime Contractor

When a certified DBE firm bids on a rail PIP contract that contains an aspirational DBE goal, the DBE firm by virtue of the work it performs on the contract with its own forces, will meet the DBE aspirational goal. The DBE bidder shall list itself along with any other DBE subcontractors on the Listing of DBE Subcontractor form and the amount of work by each.

Written Documentation – Letter of Intent

The bidder shall submit written documentation for each DBE that will be used on the project to meet the aspirational goal of the contract, indicating the bidder's intent to use the DBE in the contract. This documentation shall be submitted on the Department's form titled *Letter of Intent*. The purpose of this documentation is to make the DBE aware that their quote is being used on the project. The documentation is not intended to take the place of a formal contract between the Contractor and the DBE subcontractor.

A hard or electronic copy of the Letter(s) of Intent shall be received in the office of the State Contractor Utilization Engineer or at DBE@ncdot.gov no later than 12:00 noon of the sixth calendar day following opening of bids, unless the sixth day falls on an official state holiday. In that situation, it is due in the office of the State Contractor Utilization Engineer no later than 12:00 noon on the next official state business day.

Submission of Good Faith Effort

While the lowest responsible and responsive bidder will not be denied award of the contract based on failing to meet the advertised aspirational goal, the Department expects that the bidder will put forth a good faith effort to meet it. If the bidder fails to meet or exceed the aspirational DBE goal, the apparent lowest responsive bidder shall submit Affidavit A - Listing of Good Faith Efforts. A hard or electronic copy of the Affidavit shall be received in the office of the State Contractor Utilization Engineer or at DBE@ncdot.gov no later than 12:00 noon of the sixth calendar day following opening of bids, unless the sixth day falls on an official state holiday. In that situation, it is due in the office of the State Contractor Utilization Engineer no later than 12:00 noon on the next official state business day.

Counting DBE Participation Toward Meeting the DBE Aspirational Goal

(A) Participation

The total dollar value of the participation by a submitted DBE will be counted toward the aspirational goal of the contract. The total dollar value of the participation by a DBE will be based upon the value of work actually performed by the DBE and the actual payments to the DBE firms by the Contractor.

(B) Joint Checks

Prior notification of joint check use shall be required when counting DBE participation for services or purchases that involves the use of a joint check. Notification shall be through submission of the Form JC-1 *(Joint Check Notification Form)* and the use of joint checks shall be in accordance with the Department's Joint Check Procedures.

(C) Subcontracts (Non-Trucking)

A DBE may enter into subcontracts. Work that a DBE subcontracts to another DBE firm may be counted toward the aspirational goal. Work that a DBE subcontracts to a non-DBE firm does not count toward the aspirational goal of the contract.

(D) Joint Venture

When a DBE performs as a participant in a joint venture, the Contractor may count toward its aspirational goal a portion of the total value of participation with the DBE in the joint venture, that portion of the total dollar value being a distinct clearly defined portion of work that the DBE performs with its own forces.

(E) Suppliers

A contractor may count toward its aspirational DBE goal 60 percent of its expenditures for materials and supplies required to complete the contract and obtained from a DBE regular dealer and 100 percent of such expenditures from a DBE manufacturer.

(F) Other

A contractor may count toward its aspirational DBE goal the following expenditures to DBE firms that are not manufacturers or regular dealers:

(1) The fees or commissions charged by a DBE firm for providing a *bona fide* service, such as professional, technical, consultant, or managerial services, or for providing bonds or insurance specifically required for the performance of a DOT-assisted contract, provided the fees or commissions are determined to be reasonable and not excessive as compared with fees and commissions customarily allowed for similar services.

(2) With respect to materials or supplies purchased from a DBE, which is neither a manufacturer nor a regular dealer, count the entire amount of fees or commissions charged for assistance in the procurement of the materials and supplies, or fees or transportation charges for the delivery of materials or supplies required on a job site (but not the cost of the materials and supplies themselves), provided the fees are determined to be reasonable and not excessive as compared with fees customarily allowed for similar services.

Commercially Useful Function

Even though the goal on the rail PIP project is aspirational, there is still a requirement that the DBEs performing on the project will perform a commercially useful function in the work of a contract. The Contractor may only count/report towards the aspirational goal only expenditures to DBEs that perform a commercially useful function.

(A) A DBE performs a commercially useful function when it is responsible for execution of the work of the contract and is carrying out its responsibilities by actually performing, managing, and supervising the work involved. To perform a commercially useful function, the DBE shall also be responsible with respect to materials and supplies used on the contract, for negotiating price, determining quality and quantity, ordering the material and installing (where applicable) and paying for the material itself. To determine whether a DBE is performing a commercially useful function, the Department will evaluate the amount of work subcontracted, industry practices, whether the amount the firm is to be paid under the contract is commensurate with the work it is actually performing and the DBE credit claimed for its performance of the work, and any other relevant factors.

(B) DBE Utilization in Trucking

The following factors will be used to determine if a DBE trucking firm is performing a commercially useful function:

(1) The DBE shall be responsible for the management and supervision of the entire trucking operation for which it is responsible on a particular contract, and there shall not be a contrived arrangement for the purpose of meeting the aspirational DBE goal.

(2) The DBE shall itself own and operate at least one fully licensed, insured, and operational truck used on the contract.

(3) The DBE receives credit for the total value of the transportation services it provides on the contract using trucks it owns, insures, and operates using drivers it employs.

(4) The DBE may subcontract the work to another DBE firm, including an owner-operator who is certified as a DBE. The DBE who subcontracts work to another DBE receives credit for the total value of the transportation services the subcontracted DBE provides on the contract.

(5) The DBE may also subcontract the work to a non-DBE firm, including from an owner-operator. The DBE who subcontracts the work to a non-DBE is entitled to credit for the total value of transportation services provided by the non-DBE subcontractor not to exceed the value of transportation services provided by DBE-owned trucks on the contract. Additional participation by non-DBE subcontractors receives credit only for the fee or commission it receives as a result of the subcontract arrangement. The value of services performed under subcontract agreements between the DBE and the Contractor will not count towards the DBE credit for the project.

(6) A DBE may lease truck(s) from an established equipment leasing business open to the general public. The lease must indicate that the DBE has exclusive use of and control over the truck. This requirement does not preclude the leased truck from working for others during the term of the lease with the consent of the DBE, so long as the lease gives the DBE absolute priority for use of the leased truck. This type of lease may count toward the DBE's credit as long as the driver is under the DBE's payroll.

(7) Subcontracted/leased trucks shall display clearly on the dashboard the name of the DBE that they are subcontracted/leased to and their own company name if it is not identified on the truck itself. Magnetic door signs are not permitted.

Changes in the Work and Replacement of Pledged DBEs

Throughout the contract there may be changes made by the Engineer or Contractor that result in the reduction or elimination of work that was proposed to be performed by a DBE. Since the goals are aspirational, the Contractor will not be required to seek additional participation elsewhere on the project, but there is an expectation that there will be a continued effort to get DBEs on the job.

If the Engineer or Contractor makes changes that result in additional work to be performed by a DBE based on the Contractor's pledged DBE submittal, the Department has an expectation that the DBE shall participated in the additional work to the same extent as the DBE participated in the original work unless there is a viable reason.

If a DBE cannot perform the work for any reason, there is not a requirement to replace the DBE with another, but there is an expectation by the Department that the Contractor will continue to seek additional DBE participation opportunities on the project. The Department also requires the use of the *DBE Replacement Request Form* (RF-1) for tracking purposes.

Reporting Disadvantaged Business Enterprise Participation

The Contractor shall provide the Engineer with an accounting of payments made to all DBE firms, including material suppliers and contractors at all levels (prime, subcontractor, or second tier subcontractor). This accounting shall be furnished to the Engineer for any given month by the end of the following month. Failure to submit this information accordingly may result in the following action:

(A) Withholding of money due in the next partial pay estimate; or

(B) Removal of an approved contractor from the prequalified bidders' list or the removal of other entities from the approved subcontractors list.

While each contractor (prime, subcontractor, 2nd tier subcontractor) is responsible for accurate accounting of payments to DBEs, it shall be the prime contractor's responsibility to report all monthly and final payment information in the correct reporting manner.

Failure on the part of the Contractor to submit the required information in the time frame specified may result in the disqualification of that contractor and any affiliate companies from further bidding until the required information is submitted.

Failure on the part of any subcontractor to submit the required information in the time frame specified may result in the disqualification of that contractor and any affiliate companies from being approved for work on future DOT projects until the required information is submitted.

Contractors reporting transportation services provided by non-DBE lessees shall evaluate the value of services provided during the month of the reporting period only.

At any time, the Engineer can request written verification of subcontractor payments.

(A) Electronic Bids Reporting

The Contractor shall report the accounting of payments through the Department's DBE Payment Tracking System.

(B) Paper Bids Reporting

The Contractor shall report the accounting of payments on the Department's DBE-IS *(Subcontractor Payment Information)* with each invoice. Invoices will not be processed for payment until the DBE-IS is received.

ARRA AND OERI CONTRACT PROVISIONS AND REPORTING REQUIREMENT CERTIFICATION:

(11-20-12) (Rev. 5-21-13) SP1 G70

By submission of a proposal or bid, the Contractor agrees to comply with the following provisions. Failure to comply with any or all of the provisions herein may be cause for the contracting agency to issue a cancellation notice to a Contractor.

The Contractor is hereby notified that this project will be financed with American Recovery and Reinvestment Act of 2009 (ARRA) Funds. The Contractor shall assure that all subcontractors and other contracts for services for ARRA funded projects shall have the mandated provisions of this directive in their contracts. Pursuant to Title XV, Section 1512 of the ARRA, the Department will require that the Contractor provide reports and other employment information as evidence to document the number of jobs created and retained by this contract from the Contractor's own workforce and any subcontractors. Additionally, the North Carolina Office of Economic Recovery & Investment (hereinafter, "OERI") has mandated certain procedural and reporting directives that will be followed. Additional provisions have been added to address OERI directives. No direct payment will be made for providing said reports as the cost for same is included in the various items in the contract.

The Contractor agrees that all data submitted to NCDOT and FRA in compliance with the Recovery Act requirements shall be accurate, objective, and of the highest integrity.

Posting with the Local Employment Security Commission

In addition to any other job postings the Contractor normally uses, OERI requires that the Contractor post with the local Employment Security Commission Office, all positions for which he intends to hire workers as a result of being awarded this contract. Labor and semi-skilled positions must be posted for at least 48 hours before the hiring decision. All other positions must be posted a minimum of five days before the hiring decision. The selected Contractor and any subcontractors shall report the new hires in the manner prescribed by the Employment Security Commission and the OERI. The NC ESC website can be found at www.ncesc.com.

Required Contract Provision to Implement ARRA Section 902

Section 902 of the American Recovery and Reinvestment Act (ARRA) of 2009 requires that each contract awarded using ARRA funds must include a provision that provides the U.S. Comptroller General and his representatives with the authority to:

(1) Examine any records of the Contractor or any of its subcontractors, or any State or local agency administering such contract, that directly pertain to, and involve transactions relating to, the contract or subcontract; and

(2) Interview any officer or employee of the Contractor or any of its subcontractors, or of any State or local government agency administering the contract, regarding such transactions.

Accordingly, the Comptroller General and his representatives will have the authority and rights as provided under Section 902 of the ARRA with respect to this contract, which is funded with recovery funds made available under the ARRA. Section 902 further states that nothing in this section shall be interpreted to limit or restrict in any way any existing authority of the Comptroller General.

Authority of the Inspector General

Section 1515(a) of the ARRA provides authority for any representatives of the Inspector General to examine any records or interview any employee or officers working on this contract. The Contractor is advised that representatives of the Inspector General have the authority to examine any record and interview any employee or officer of the Contractor, its subcontractors or other firms working on this contract. Section 1515(b) further provides that nothing in this section shall be interpreted to limit or restrict in any way any existing authority of the Inspector General.

Office of State Budget and Management Access to Records

OERI requires that the Contractor and subcontractor agree to allow the Office of State Budget and Management internal auditors and state agency internal auditors access to records and employees pertaining to the performance of any contract awarded by a public agency.

Buy America Provision

49 U.S.C. Section 24405(a)(1) requires that iron, steel and manufactured goods used in public buildings or public works projects must be manufactured in the United States. The Contractor agrees to abide by this provision and shall maintain records of such purchases for inspection by authorized agents of the State of North Carolina and federal agencies. The Contractor shall provide the Certificate of Compliance with Buy America to the Engineer. Copies of this certificate are available on the Piedmont Improvement Program website at http://www.piedmontrail.biz/primary-navigation/links-and-resources.

Wage Rate Provision (applies to all construction, alteration or repair projects)

Section 1606 of the ARRA requires that all laborers and mechanics employed by Contractors and subcontractors with funds from the ARRA shall be paid wages at rates not less than the prevailing wage rate under the Davis-Bacon Act. The Contractor agrees that by the submission of a proposal/bid in response to a solicitation funded in whole or in part with recovery funds, continuous compliance will be maintained with the Davis-Bacon Act. This applies to all construction contracts that exceed $2,000.

Labor Provisions

As provided by 49 U.S.C. 24405(b), persons conducting rail operations over rail infrastructure constructed or improved in whole or in part with funds provided through the ARRA agreement shall be considered a "rail carrier," as defined by 49 U.S.C. 10102(5), for the purposes of Title 49, United States Code, and any other statute that adopts that definition or in which that definition applies, including the Railroad Retirement Act of 1974 (45 U.S.C. 231 et seq.), the Railway Labor Act (43 45 U.S. C. 151 et seq.), and the Railroad Unemployment Insurance Act (45 U.S.C. 351 et seq.).

Availability and Use of Funds

Contractors understand and acknowledge that any and all payment of funds, or the continuation thereof, is contingent upon funds provided solely by ARRA or required state matching funds. Pursuant to Section 1604 of ARRA, Contractors agree not to undertake or make progress toward any activity using recovery funds that will lead to the development of such activity as casinos or other gambling establishments, aquariums, zoos, golf courses, swimming pools or any other activity specifically prohibited by the Recovery Act. Also, funds are not to be used for travel beyond the service area. Further, Contractor understands that ARRA funding is considered "one-time" funding.

Outsourcing outside the USA without Specific Prior Approval Provision

Contractor agrees not to use any recovery funds from a contract or any other performance agreement awarded by the State of North Carolina, its agencies, or political subdivisions for outsourcing outside of the United States, without specific prior written approval from the agency issuing the contract.

Federal, State and Local Tax Obligations

By submission of a proposal, Contractors and subcontractors assert and self-certify that all Federal, State and local tax obligations have been or will be satisfied prior to receiving recovery funds.

Anti-Discrimination and Equal Opportunity

Pursuant to Section 1.7 of the guidance memorandum issued by the United States Office of Management and Budget on April 3, 2009, recovery funds must be distributed in accordance with all anti-discrimination and equal opportunity statutes, regulations, and Executive Orders pertaining to the expenditure of funds.

Reports of Fraud or Waste

Contractors must report to the Inspector General any suspected incidence of waste, fraud and abuse related to ARRA funds, and should notify FRA regional offices of any problems encountered as they occur. Notification can be made by phone at (919) 807-4731 or electronically at oeri@osbm.nc.gov. Additional information can be found on the NC Recovery website (www.ncrecovery.gov) by clicking "Reporting of Waste and Fraud".

False Claims Act

Contractors and subcontractors awarded funds made available under the Recovery Act shall promptly report to the Inspector General any credible evidence that a principal, employee, agency, Contractor, subcontractor or other person has submitted a false claim under the False Claims Act or has committed a criminal or civil violation of laws pertaining to fraud, conflict of interest, bribery, gratuity, or similar misconduct involving Recovery Act funds.

Whistleblower Provisions

Contractors understand and acknowledge that Article 14 of Chapter 124, NCGS 126-84 through 126-88 (applies to the State and state employees), Article 21 of Chapter 95, NCGS 95-240 through 85-245 (applies to anyone, including state employees), and Section 1553 of the Recovery Act (applies to anyone receiving federal funds), provide protection to State, Federal and contract employees.

Contractors or Agencies cannot discharge, demote, or otherwise discriminate against an employee as a reprisal for disclosing, including a disclosure made in the ordinary course of an employee's duties, to the Recovery Accountability and Transparency Board, an Inspector General, the Comptroller General, a member of Congress, a State or Federal regulatory or law enforcement agency, a person with supervisory authority over the employee (or such other person working for the employer who has the authority to investigate, discover or terminate misconduct), a court or grand jury, the head of a Federal agency or their representative, information that the employee reasonably believes is evidence of:

(A) gross mismanagement of an agency contract or grant relating to covered funds;

(B) a gross waste of covered funds;

(C) a substantial and specific danger to public health or safety related to the implementation or use of covered funds;

(D) an abuse of authority related to the implementation or use of covered funds; or

(E) a violation of law, rule, or regulation related to an agency contract (including the competition for or negotiation of a contract) or grant, awarded or issued relating to covered funds.*

* covered funds: "any contract, grant, or other payment received by any non-federal employer if a) the Federal Government provides any portion of the money or property that is provided, requested or demanded; and b) at least some of the funds are appropriated or otherwise made available by this Act" 1553 (g)(2).

Contractor agrees to post notice of the rights and remedies as required by the ARRA.

Emblems

The Contractor agrees to use signs and materials at all fixed project locations at the most publicly accessible location announcing that the project or equipment was funded by the U.S. Department of Transportation, Federal Railroad Administration, with funds provided through the American Recovery and Reinvestment Act as directed by NCDOT. This provision is to be included in any subagreements, leases, third party contracts, or other similar documents used in connection with its Recovery Act Project.

Contractor Responsibilities and Reporting Requirements under ARRA

Contractors are required to complete projects or activities which are funded under the ARRA and to report on use of the funds provided through this award as directed. Information from these reports will be made available to the public. The reporting responsibility should be passed down from the Contractor to the subcontractor in order to ensure that the necessary information is provided within the specified deadline.

Contractors are not responsible for reporting ARRA requirements directly to FRA. The Contractor shall report the required data by way of NCDOT-supplied forms (either Microsoft Excel forms and in the approved version of Excel or editable pdf forms, as provided by NCDOT). The responsibilities for reporting are as follows:

(A) General

(1) Obtaining a Data Universal Numbering System (D-U-N-S) number or the Contractor may use their name and zip code of their Headquarters. For more information, visit http://fedgov.dnb.com/webform (for US and International locations) or call 866-705-5711. The toll free number is for US locations only. Registrants will be asked for their entity name, address, city, state, country, postal code, highest ranking individual's name and title, line of business, # of employees and legal structure (i.e.: corporation, non-profit, etc.) and socio economic data (veteran owned, women owned, etc.). If they use the web-form, there is a mailing address area, SIC code and annual revenue data lines but these are optional.

(2) Expenditure amount (amount of payment).

(3) Expenditure description (what was exchanged for the payment).

(4) A brief description of the types of jobs created and jobs retained. "Jobs or positions created" means those new positions created and filled, or previously existing unfilled positions that are filled, as a result of Recovery Act funding. ''Jobs or positions retained'' means those previously existing filled positions that are retained as a result of Recovery Act funding. A job cannot be reported as both created and retained. Note that contractors will describe jobs created and retained, but will not need to determine which were created versus which were retained.

(5) An estimate of the number of jobs created and jobs retained. At a minimum, this estimate shall include any new positions created and any existing filled positions that were retained to support or carry out Recovery Act projects. The number shall be expressed as ''full-time equivalent'' (FTE), reported monthly as all hours worked divided by the total number of hours in a full-time schedule.

(6) Percent complete and DBE payment data shall be submitted on a monthly basis, and is due to the NCDOT-Rail Division within 5 days of the end of each month.

(B) ARRA Section 1512

Contractor shall complete Form FHWA-1589 for each month and submit it to the NCDOT-Rail Division within 7 days after the end of the month. This data will be required until the contract is complete.

(1) Contractors will need to report the number of direct on-site job hours associated with the ARRA funds awarded as of the end of the reporting period.

(a) Contractors will not be expected to estimate indirect employment data (such as the employment needed to make "off the shelf" parts that the Contractor purchases).

(b) The Contractor shall report direct labor (for example, construction workers building a maintenance facility, or transit agency workers doing preventive maintenance) for the prime as well as all subcontractors.

(c) The Contractor shall report direct labor for suppliers when the quantity or value of purchases passes a threshold where there is likely an identifiable employment impact for the vendor. NCDOT will provide detailed guidance and assistance in this calculation.

(d) USDOT economists will compute the number of indirect jobs and induced jobs (for example, jobs at suppliers or in unrelated industries as a result of the money flowing through the economy.)

(2) Contractors and consultants shall provide the required information for their own workforce as well as the workforce of all subcontractors that were active on their ARRA funded project(s) for the reporting month.

(3) The requirement for monthly reporting of employment data is included in all ARRA funded contracts to ensure transparency throughout the delivery of the project. As such, specific requirements have been developed for reporting this monthly data. All Contractors awarded projects shall attend a training session in Raleigh, North Carolina to discuss reporting requirements and procedures.

The Contractor hereby agrees to comply with the Contract Provisions and Reporting Requirements as indicated in the American Recovery and Reinvestment Act of 2009 and any amendments thereto. The Contractor also agrees to comply with any additional reporting requirements that may be requested by NCDOT, FRA, USDOT, the Inspector General (IG), the Government Accountability Office (GAO), or other entities, for example Congressional committees or individual members of Congress. The Contractor hereby agrees to inspections or audits that may occur at any time from the any of the above referenced federal or state agencies. Contractors are requested to provide a copy of any such reports to NCDOT on any responses to such requests for information or as a result of an inspection or audit.

SPECIAL NOTICE TO BIDDERS:

(2-19-13) (Rev. 10-15-13) SP1 G71

This project involves constructing new railroad roadbed on existing Railroad Right of Ways. The North Carolina Department of Transportation will be administering the project and the work will be constructed in accordance with the *January 2012 NCDOT Standard Specification for Roads and Structures*. The *Standard Specifications for Roads and Structures, January 2012 of the North Carolina Department of Transportation*, hereinafter referred to as the *Standard Specifications*, shall apply to the articles of the Project Special Provisions. Portions of the work will be done in accordance with Norfolk Southern, Standard Specifications for Materials and Construction, February 2013 and North Carolina Railroad Company's, FORM NCR 102, SPECIFICATIONS FOR PIPELINE OCCUPANCY OF NORTH CAROLINA RAILROAD COMPANY, Revised January 2009 and FORM NCR 103, SPECIFIC REQUIREMENTS OF NORTH CAROLINA RAILROAD COMPANY FOR WORK ON ITS RIGHT OF WAY, September 1, 2003. These Project Special Provisions sections of the proposal have been written to be in accordance with these documents.

The construction will be taking place in existing Railroad Right of Way owned by North Carolina Railroad Company adjacent to existing tracks that are operated and maintained by Norfolk Southern Corporation. Safety in the Right of Way will be top priority and Norfolk Southern's safety and security policies shall be followed for all employees working within the Right of Way. The safety and security policies and guidelines are further defined in the special provisions.

All work adjacent to the live tracks shall be coordinated with the Norfolk Southern Railway (NSR) Roadway Worker In Charge, as defined later in this document. As a result of safety requirements for passing trains, there will be intermittent delays requiring all equipment within 25' of the operating tracks to stop work until authorized to proceed by the Railroad. This will result in intermittent delays to the contractor's operations. The contractor needs to account for this in preparing his bid. The contractor shall have no claims whatsoever against the Railroad or the Department for any delays or additional cost incurred for the delays or any changes to the information above after the date of receipt.

PREQUALIFICATION OF RAIL ROAD GRADING CONTRACTORS (PIP):

(2-19-13) SP1 G72

Contractors desiring to perform work on this project shall be prequalified in accordance with Article 102-2 of the *2012 Standard Specifications*. Due to this job being on NCRR right of way and working within close proximity of active rail tracks for both freight and passenger trains, all prime contractors must be prequalified to do work covered by **work code 5090**. All bidders shall be prequalified for work code 5090 within 10 calendar days of bid opening, in order to be awarded the contract.

The following criteria may be used to help prequalify contractors for this project:

(A) Within the last 5 years, the applicant must have been a prime contractor on at least two (2) Interstate or US Route Improvement Projects (i.e. widening, resurfacing), or a prime contractor on two (2) railroad roadbed projects parallel and adjacent to active main track on a Class I Railroad. NCDOT may also consider comparable experience on heavily travelled state routes and airport runway projects.

(B) The above projects must have been at least $4 million in project cost.

(C) Within the last 5 years the applicant must have had at least one project (does not have to be one of the 2 above) that was within or over railroad right of way and involved a rail flagger.

PROTECTION OF RAILROAD INTEREST:

(2-19-13) SP1 G73

KEY STAKEHOLDERS AND ROLES FOR THE JOB

The following defines the roles of key stakeholders and persons with authority on the job

TERMS	DEFINITIONS
Owner, Company	North Carolina Railroad Company (NCRR). They own the right of way, facilities, tracks, structures, etc., that Norfolk Southern Railway and others operate on.
Owner's Engineer/Representative	North Carolina Railroad Company's engineer or their authorized representative for the project.
Operating Railroad, Railroad, Railway, Railway Company	Norfolk Southern Railway (NSR) operates and Railroad Company maintains the track facilities and signals.
Railroad Engineer	NSR Engineers or their authorized representatives.
RWIC/flagman	Roadway Worker In Charge. This is NSR's onsite representative responsible for obtaining track time for work activities adjacent to the tracks and safety within the Railroad right of way. He/She may be in charge of multiple Railroad flagmen assigned to a project if more than one is required or he may be the flagman for the project.
NCDOT, Department, Department of	The North Carolina Department of Transportation is administering the contracts and performing the inspection on

TERMS	DEFINITIONS
Transportation,	the projects for compliance. Also, referred to as the Department or NCDOT.
Engineer, Department's Engineer	NCDOT's Division Engineer, Division Construction Engineer (DCE), Resident Engineer (RE), Assistant Resident Engineer, the authorized representative for NCDOT.
Inspector, Department's Inspector	The authorized inspector for NCDOT.
Standard Specifications, Specifications	NCDOT Standard Specifications for Road and Structures, January 2012.
NCDOT Rail, Rail Division	The North Carolina Department of Transportation, Rail Division. They are a branch of the Department of Transportation responsible for schedule review, reviewing change orders; assisting in answering requests for information (RFI), and working with the owners, operating rail and the Department, and the FRA for compliance and project closeout.
NSR Specifications 2013	Norfolk Southern Standard Specifications for Materials and Construction - February 2013.
NCRR Specifications	This includes the following documents: North Carolina Railroad - NCR101 – Specifications for Wire, Conduit and Cable Occupations of North Carolina Railroad Company, NCR102 – Specifications for Pipeline Occupancy of North Carolina Railroad Company, NCR103 – Specific Requirements of North Carolina Railroad Company for Work on its Right of Way.

AUTHORITY OF RAILROAD ENGINEER AND DEPARTMENT ENGINEER

The authorized representative of the Operating Railroad Company, hereinafter referred to as Railroad Engineer, shall have final authority in all matters affecting the safe maintenance of Railroad traffic of the Operating Railroad Company including the adequacy of the foundations and structures supporting the Railroad tracks.

The authorized representative of the North Carolina Department of Transportation, hereinafter referred to as the Engineer, shall have authority over all other matters as prescribed herein including Project Specifications, Special Provisions, and the plans.

SAFETY GUIDELINES FOR PERSONNEL WORKING ON COMPANY CORRIDOR

All contractor and subcontractor personnel working on NCRR right of way and on or adjacent to NSR operated tracks shall attend and pass a Roadway Worker Training course for NSR prior to beginning work on the Railroad right of way and shall attend the class annually. Contractor and subcontractor personnel shall adhere to the following Norfolk Southern Railway safety guidelines:

(A) The Contractor and all personnel must follow all applicable railroad and governmental rules, with particular attention paid to railroad operating rules, Railroad rules for the

conduct of contractors, Railroad rules for the operation of moving vehicles, and Federal Railway Administration roadway worker rules.

(B) No one shall be allowed within 25' of the centerline of the nearest track without the specific authorization of the RWIC/flagman.

(C) The Contractor shall require that its employees or employees of any subcontractors wear the following while on or about the Railroad right of way:
(1) Appropriate head protection.
(2) Appropriate eye protection.
(3) Appropriate hearing protection.
(4) Appropriate respiratory protection.
(5) Appropriate high visibility reflective safety vests are required for work inside active intermodal facilities, public rights of way, or other locations as required by the Railroad and the MUTCD.
(6) Suitable protective clothing and footwear. Working in shorts is prohibited. Shirts must cover shoulders, back and abdomen. Working in tennis or jogging shoes, sandals, boots with high heels, cowboy and other slip-on type boots is prohibited. Hard sole, lace up footwear, zippered boots or boots cinched up with straps which fit snugly about the ankle are adequate. Safety steel toe boots are required.
(7) All protective equipment must be in good condition and properly fitted.

(D) The Contractor shall observe the safety provisions of applicable laws and building and construction codes shall be observed. Machinery and equipment and other hazards shall be guarded in accordance with the safety provisions of the most recent edition of the Manual of Accident Prevention in Construction, published by the Associated General Contractors of America, to the extent that such provisions are consistent with applicable law or regulation.

(E) The Contractor shall permit only qualified personnel to perform welding. Proper clothing, gloves and shields must be worn for body and eye protection. All welding equipment must be properly tested and in good working order. All welding equipment and cutting torches being used within 25 feet of the track must be shut off and work stopped when train is passing.

(F) Anyone working on Railroad Right-of-Way found to be under the influence of alcohol or other intoxicant, narcotic or hallucinogenic drug, or in possession of such intoxicant or drug, shall be dismissed from the property by the Contractor and not allowed to return.

(G) When anyone working on Railroad right of way is injured, the Contractor shall arrange for emergency medical assistance, if needed, and the Contractor shall notify Railroad Engineer and the Department's Engineer of such incident by the quickest method of communication available.

(H) The Contractor shall not permit the use of defective or improvised tools and equipment for the work.

(I) At the direction of the Railroad Engineer and the Department's Engineer, the Contractor shall work with local emergency response personnel to develop action plans to respond to emergency situations.

(J) The Contractor is responsible for maintaining emergency site access(es) for local emergency response personnel.

(K) The Contractor must promptly notify Railroad Engineer and the Department's Engineer of any safety incident or injury involving any person(s) on the project site.

(L) The Contractor shall hold daily safety briefings involving all personnel working on site per railroad safety rules. Personnel arriving onsite after the safety briefing shall be briefed before proceeding with their work. The Contractor and all personnel shall hold additional safety briefings during the day as conditions or work changes.

(M) The Contractor is responsible for obtaining eRailSafe certification for itself and its employees working on Railroad right of way upon award of Contract. The Contractor shall follow all eRailSafe requirements and escort all subcontractors or non-certified employees on site. Information about requirements and responsibilities to become eRailSafe can be found at: http://www.e-railsafe.com/

(N) The Contractor and all personnel are responsible for obtaining FRA and NSR approved Roadway Worker Certification through an NSR-approved trainer.

(O) All persons working near track while train is passing are to lookout for dragging bands, chains and protruding or shifted cargo.

(P) No one is allowed to cross tracks without specific authorization from the flagman.

(Q) No steel tape or chain will be allowed to cross or touch rails without permission.

GUIDELINES FOR EQUIPMENT WORKING ON COMPANY'S CORRIDOR

The following applies to all equipment being operated within the Railroad right of way:

(A) The Contractor's actions shall not interfere with normal train operations. The Contractor shall provide a weekly schedule of activities that may affect train operations or require flagging protection.

(B) NSR will provide service outages only when absolutely required for construction activities as determined by the Railroad Engineer. No claim by the Contractor against NSR and the Department will be allowed for delays caused by NSR's operations.

(C) When working on or near operating tracks to be kept in service, NSR may provide a schedule of allowable work periods. Allowable work periods may change due to the variances in train operations. If the Contractor fails to comply with the schedules and performs its work in a manner that causes delay to NSR train operations, it shall be liable for any delays and shall reimburse NSR upon receipt of bills therefore. If at any time the Contractor is required to work longer than a normal 8 hour day to prevent disruption to NSR's train operations, then the Contractor shall do so at no expense to the Railroad and the Department.

(D) At locations where a flagman is deemed necessary by the Railroad Engineer for the safety of Railroad's property and operations, the Contractor will observe the directions given by the RWIC/flagman. The Contractor will assure that it officers, agents, suppliers, subcontractors and employees observe the directives given by the RWIC/flagman. It is distinctly understood, however, that no direction or failure to give direction by the RWIC/flagman will relieve the Contractor from any of its indemnification commitments in the contract.

(E) No one shall be allowed within 25' of the centerline of the nearest track without the specific authorization of the RWIC/flagman.

(F) No one shall be allowed to cross the tracks without specific authorization of the RWIC/flagman.

(G) All persons working near the track while a train is passing are to look for dragging bands, chains and protruding or shifted cargo. If any of these are observed, they must notify the RWIC/flagman immediately.

(H) No one shall be allowed to pass between, over or under rail cars.

(I) No steel or metallic chain or measuring tape shall be allowed to cross or touch rails without permission of the RWIC/flagman.

(J) No construction materials shall be placed on tracks without approval of the Railroad Engineer.

(K) When working on tracks, switches shall be lined away from the work area and switch points spiked down or clamped or rail ends mismatched to prevent cars or engines from entering the work area.

(L) No crane or boom equipment will be allowed to set up to work or park within boom distance plus 15' of centerline of track without specific permission from railroad official and flagman.

(M) No crane or boom equipment will be allowed to foul track or lift a load over the track without flagman protection and track time.

(N) All employees will stay with their machines when crane or boom equipment is pointed toward track.

(O) All cranes and boom equipment under load will stop work while train is passing (including pile driving).

(P) Swinging loads must be secured to prevent movement while train is passing no loads will be suspended above a moving train.

(Q) No equipment will be allowed within 25' of centerline of track without specific authorization of the flagman.

(R) Trucks, tractors or any equipment will not touch ballast line without specific permission from flagman.

(S) No equipment or load movement within 25' or above a standing train or railroad equipment without specific authorization of the flagman.

(T) All operating equipment within 25' of track must halt operations when a train is passing. All other operating equipment may be halted by the flagman if the flagman views the operation to be dangerous to the passing train.

(U) All equipment, loads and cables are prohibited from touching the rails.

(V) While clearing and grubbing, no vegetation will be removed from railroad embankment with heavy equipment without specific permission from the Railroad Engineer and flagman.

(W) The Contractor is responsible for the ingress and egress of its plant, equipment, materials and labor to and from the construction site in accordance with the following:
   (1) No movement that may endanger the safe normal Railroad operations shall be made without the approval of the RWIC/flagman as to route and time of use.
   (2) No movement of the Contractor's plant equipment, materials and labor to and from the site shall be made without the approval of the RWIC/flagman.

(X) Railroad regulations concerning the movement of vehicles on Railroad property shall be followed by the Contractor, its subcontractors and all of the respective personnel, including, without limitation, weight restrictions for roadways.

(Y) Use of access routes shall not cause the fouling of turnouts, flangeways, equipment, and drainage facilities with gravel, mud, waste materials, or timbers used for crossing tracks. Such routes shall be planned in such a way to minimize the risk of damage to Railroad facilities and must be approved by the Railroad Engineer.

(Z) No equipment or materials will be parked or stored on Company's corridor unless specific authorization is granted from the Railroad Engineer.

(AA) All unattended equipment that is left parked on Company's corridor shall be effectively immobilized so that it cannot be moved by unauthorized persons.

(BB) All cranes and boom equipment will be turned away from track after each work day or whenever unattended by an operator.

FAILURE TO COMPLY WITH SAFETY REQUIREMENTS

Failure to comply with any safety requirements within the railroad right of way may result in the removal of the individual or individuals responsible for violation of policies. Depending upon the severity of the violation as determined by the Railroad Engineer, RWIC/flagman or the Department's Engineer, the individual or individuals implicated must leave the RR right of way

within 1 hour of notification of the violation. Depending on the severity of the violation, the individual or individuals who were involved in the incident may be able to return to the job the following day. That determination will be made by the RWIC and the Departments representative on site. The individual or individuals will be notified if they are allowed to return the following day by the close of business the day of the occurrence. If they are not allowed to return the next day, the contractor may file an appeal to the Department's Engineer requesting the individual or individuals accused of the violation be allowed to return to the job. The Resident Engineer will then notify the Railroad of the appeal and a meeting will be held to determine if the individual or individuals will or will not be allowed to return to the job. The individual or individuals alleged to have committed the violation will not be allowed on the project until after the Railroad Engineer and Department Engineer have reviewed the appeal and made a determination if the individual or individuals may return. If a person is allowed return to the site after the appeal process and a second violation of policies occurs, that will be grounds for permanent removal of the individual from the worksite. This does not only apply to individuals, but may apply to entire crews as well depending on the circumstances and severity of the violation of policy. The contractor shall have no claims whatsoever against the Railroad or the Department for any delays or additional cost incurred as a result of safety violations and removal of the individual or individuals from the job.

FEDERAL RAILROAD ADMINISTRATION (FRA) SAFETY REQUIREMENTS

In addition to NSR safety guidelines above, the Contractor will be required to adhere to the safety requirements of the Federal Railroad Administration and comply with Title 49, Volume 4, Chapter 2, Part 213 and 214 of the Code of Federal Regulations. This information can be found at the following link:

http://ecfr.gpoaccess.gov/cgi/t/text/text-idx?c=ecfr&sid=ef344d8e404793fcb6650641e75f7e43&rgn=div5&view=text&node=49:4.1.1.1.8&idno=49

The FRA may conduct inspections on this project and fines can be levied against both the individual cited and the contractor for violations of these policies. The contractor shall have no claims whatsoever against the Railroad or the Department for any delays or additional cost incurred as a result of violations and fines for noncompliance with the above FRA guidelines.

RAILROAD INSURANCE: SPECIAL PROVISIONS FOR PROTECTION OF RAILWAY INTEREST

State Project: P-5206B, C, D County: Rowan

(A) In addition to any other forms of insurance or bonds required under the terms of the contract and specifications, the Prime Contractor will be required to provide coverage conforming to the requirements of the Federal-Aid Policy Guide outlined under 23 CFR 646A for all work to be performed on Company's corridor by carrying insurance of the following kinds and amounts:

(1) CONTRACTOR'S COMMERCIAL GENERAL LIABILITY INSURANCE: The Contractor shall furnish an original and one copy of the certificate of insurance and one certified copy of the policy to the Department as evidence that,

with respect to the operations he performs on railroad right of way, he carries regular Commercial General Liability Insurance having a combined single limit of not less than $2,000,000 per occurrence for all loss, damage, cost and expense, including attorneys' fees, arising out of bodily injury liability and property damage liability during the policy period. Said policy shall include explosion, collapse, and underground hazard (XCU) coverage, shall be endorsed to name Company and Railroad specified in item A.2.c. below as an additional insured, and shall include a severability of interests provision.

(2) RAILROAD PROTECTIVE LIABILITY INSURANCE:
The Contractor shall furnish to the Department an original and one duplicate of the Railroad Protective Liability Insurance having a combined single limit of not less than $2,000,000 each occurrence and $6,000,000 in the aggregate applying separately to each annual period. If the project involves track over which passenger trains operate, the insurance limits required are not less than a combined single limit of $5,000,000 each occurrence and $10,000,000 in the aggregate applying separately to each annual period. Said policy shall provide coverage for all loss, damage or expense arising from bodily injury and property damage liability, and physical damage to property attributed to acts or omissions at the job site.

The standards for the Railroad Protective Liability Insurance are as follows:

(a) The insurer must be rated A- or better by A.M. Best Company, Inc.

(b) The policy must be written using one of the following combinations of Insurance Services Office ("ISO") Railroad Protective Liability Insurance Form Numbers:
   (1) CG 00 35 01 96 and CG 28 31 10 93; or
   (2) CG 00 35 07 98 and CG 28 31 07 98; or
   (3) CG 00 35 10 01; or
   (4) CG 00 35 12 04

(c) The named insured on each policy as required to be issued to each Company and to Railroad shall read: (NOTE: The below insured is to be treated separately as an insured on each railroad protective policy for a total of (2) two separate policies being issued.)

North Carolina Railroad Company
2809 Highwoods Blvd, Suite 100
Raleigh, NC 27604-1000
Attn: Property Department;

and

Norfolk Southern Railway Company
Three Commercial Place
Norfolk, Virginia 23510-2191
Attn: Risk Management

(d) The description of operations must appear on the Declarations, must match the project description in this agreement, and must include the appropriate Department project and contract identification numbers.

The Description and Designation shall read:

Construction of new railroad roadbed, structures, utility relocation and roadway improvements between CP "Reid" and CP "North Kannapolis", adjacent to the tracks owned by North Carolina Railroad Company and operated by Norfolk Southern Railway, in Rowan County, North Carolina, identified as State TIP P-5206BCD and Federal Project FRA FR HSR 0006 10 01 00.

(e) The job location must appear on the Declarations and must include the city, state, and appropriate highway name/number.

(f) The name and address of the prime contractor must appear on the Declarations.

(g) The name and address of the Department must be identified on the Declarations as the "Involved Governmental Authority or Other Contracting Party."

(h) Other endorsements/forms that will be accepted are:
- (1) Broad Form Nuclear Exclusion – Form IL 00 21
- (2) 30-day Advance Notice of Non-renewal or cancellation
- (3) 60-day written notice be given the Department prior to cancellation or change
- (4) Quick Reference or Index Form CL/IL 240

(i) Endorsements/forms that are NOT acceptable are:
- (1) Any Pollution Exclusion Endorsement except CG 28 31
- (2) Any Punitive or Exemplary Damages Exclusion
- (3) Known injury or Damage Exclusion form CG 00 59
- (4) Any Common Policy Conditions form
- (5) Any other endorsement/form not specifically authorized in item no. 2.h above.

(B) If any part of the work is sublet, similar insurance, and evidence thereof as specified in A.1 above, shall be provided by or on behalf of the subcontractor to cover its operations on Railroad's right of way. As an alternative, the Prime Contractor may provide insurance for the subcontractor by means of separate and individual policies.

(C) Prior to entry on Company's corridor, the original and one duplicate copy of the Railroad Protective Liability Insurance Policy shall be submitted by the Prime Contractor to the Department at the address below for its review and transmittal to the Company and Railroad. In addition, certificates of insurance evidencing the Prime Contractor's and any subcontractors' Commercial General Liability Insurance shall be issued to the Department, Company and Railroad at the addresses below, and one certified copy of the Prime Contractor and any Subcontractor's policy is to be forwarded to the Department for its review and transmittal to the Company and Railroad. All policies and certificates of insurance shall state that the insurance coverage will not be suspended, voided, canceled, or reduced in coverage or limits without (30) days advance written notice to the Department, Company and Railroad. The Railroad will not permit any work on Company's corridor until the Company and Railroad has reviewed and approved the evidence of insurance required herein.

DEPARTMENT:
NCDOT Rail Division
Risk Management
Engineering & Safety Branch
C/O State Railroad Agent
1556 Mail Service Center
Raleigh, NC 27699-1556

RAILROAD:
Norfolk Southern Railway Company
Three Commercial Place
Norfolk, Virginia 23510-2191

COMPANY:
North Carolina Railroad Company
2809 Highwoods Blvd.
Suite 100
Raleigh, NC 27604

(D) The insurance required herein shall not limit the obligations of Department or its Contractors under the terms of this agreement.

(E) The insurance amounts specified are minimum amounts and that the Contractor may carry insurance in larger amounts if he so desires. As to "aggregate limits", if the insurer establishes loss reserves equal to or in excess of the aggregate limit specified in any of the required insurance policies, the Contractor shall immediately notify the Department and shall cease all operations until the aggregate limit is reinstated. If the insurer establishes loss reserves equal to or in excess of one/half of the aggregate limit, the Contractor shall arrange to restore the aggregate limit to at least the minimum amount stated in these requirements. Any insurance policies and certificates taken out and furnished due to these requirements shall be approved by the Department, Company and Railroad as to form and amount prior to beginning work on Company's corridor.

(F) All insurance herein before specified shall be carried until the final inspection and acceptance of the project by the Department, Company and Railroad, or acceptance of that portion of the project within Company's corridor. At this point, no work or any other activities by the Contractor shall take place in Company's corridor without written permission from the Department, Company and Railroad.

FAILURE TO COMPLY

In the event the Contractor violates or fails to comply with any of the requirements of these Special Provisions:
(1) The Railroad Engineer may require that the Contractor vacate Company's corridor.
(2) The Engineer may withhold all monies due the Contractor on monthly statements.

Any such orders shall remain in effect until the Contractor has remedied the situation to the satisfaction of the Railroad Engineer and the Engineer.

PAYMENT FOR COST OF COMPLIANCE

No separate payment will be made for any extra cost incurred on account of compliance with these special provisions. All such cost shall be included in prices bid for other items of the work as specified in the payment items.

RAILROAD SITE DATA

The following information is provided as a convenience to the Contractor. This information is subject to change and the Contractor should contact the Railroad to verify the accuracy. Since this information is shown as a convenience to the Contractor but is subject to change, the Contractor shall have no claims whatsoever against either the Railroad or the Department of Transportation for any delays or additional costs incurred based on changes in this information.

Number of tracks	-	1 Main Track
Number of trains per day	-	40
Type of Trains per day	-	8 Passenger and 32 Freight
Maximum speed of trains	-	79 mph(Passenger),60 mph (Freight)

NOTICE OF STARTING WORK

The contractor shall not commence any work on Company's corridor until the contractor has complied with the following conditions:

(A) Give the Company and Railroad written notice, with copy to the Engineer who has been designated to be in charge of the work, at least ten days in advance of the date the contractor proposes to begin work on Company's corridor/NCRR right of way. Notice to be given to:

Mr. Rick Meredith, PE
Norfolk Southern Corporation
1200 Peachtree Street NE
Building Box 142
Atlanta, Georgia 30309

Mr. Jim Kessler, PE
North Carolina Railroad Company
2809 Highwoods Blvd
Suite 100
Raleigh, NC 27604

(B) Obtained written authorization from both Norfolk Sothern Railway and North Carolina Railroad Company to begin work on Railroad right-of-way, such authorization to include an outline of specific conditions with which the contractor must comply.

(C) Obtained written approval from the Railroad of Railroad Protective Insurance Liability coverage as required by the provisions for Railroad Insurance above. The Railroad does not accept notation of Railroad protective insurance on a certificate of liability insurance form or Binders as Railroad must have the full original countersigned policy. The policy will be reviewed for compliance prior to written approval. Due to the number of projects system-wide, it typically takes a minimum of 30-45 days for Railroad to review.

(D) Furnish a schedule for all work within the Railroad right-of-way as required. Obtain written authorization from the Railroad to begin work on Company's right of way, such authorization to include an outline of specific conditions with which he must comply.

(E) Obtain Railroad's Flagging Services as required.

(F) The contractor must execute and deliver to NCRR and NSR a standard construction right of entry agreement approved by NCRR and NSR together.

The Railroad's written authorization to proceed with the work shall include the names, addresses, and telephone numbers of the Railroad's representatives who are to be notified as hereinafter

required. Where more than one representative is designated, the area of responsibility of each representative shall be specified.

INTERFERENCE WITH RAILROAD OPERATIONS

The Contractor shall so arrange and conduct his work that there will be no interference with Railroad operations, including train, signal, telephone and telegraphic services, or damage to the property of the Company or Railroad or to poles, wires, and other facilities of tenants on the right of way of the Company. Whenever work is liable to affect the operations or safety of trains, the method of doing such work shall first be submitted to the Railroad Engineer for approval, but such approval shall not relieve the Contractor from liability. Any work to be performed by the Contractor which requires flagging service or inspection service (watchman) shall be deferred by the Contractor until the flagging protection or inspection service required by the Railroad is available at the job site.

Whenever work within Company's corridor is of such a nature that impediment to Railroad operations such as use of runaround tracks or necessity for reduced speed is unavoidable, the Contractor shall schedule and conduct his operations so that such impediment is reduced to the absolute minimum.

Should conditions arising from, or in connection with the work, require that immediate and unusual provisions be made to protect operations and property of the Company and Railroad, the Contractor shall make such provisions. If in the judgment of the Railroad Engineer, or in his absence, the Railroad's Division Engineer, such provision is insufficient, either may require or provide such provisions as he deems necessary. In any event, such unusual provisions shall be at the Contractor's expense and without cost to the Department, Company, or Railroad.

TRACK CLEARANCES

(A) Before undertaking any work within railroad right-of-way, or before placing any obstruction over any track, the Contractor shall:
- (1) Notify the RWIC/Track Supervisor at least 72 hours in advance of the work.
- (2) Receive assurance from the Railroad Engineer that arrangements have been made for flagging service as may be necessary.
- (3) Receive permission from the RWIC/Track Supervisor to proceed with the work.
- (4) Ascertain that the Engineer has received copies of notice to the Railroad and of the Railroad's response thereto.

(B) The minimum track clearances to be maintained by the Contractor during construction are as follows:
- (1) Horizontal clearance measured from centerline of track to falsework:
  13'-0" on tangent track
  14'-0" on curved track
- (2) Vertical clearance from top of rail to falsework: 22'-0"

CONSTRUCTION PROCEDURES

(A) General

Construction work and operations by the Contractor on Company's property shall be:

(1) Subject to the inspection and approval of the NSR and NCDOT.
(2) In accordance with all of the Railroad's written specific conditions.
(3) In accordance with the Railroad's general rules, regulations and requirements including those relating to safety, fall protection and personal protective equipment.
(4) In accordance with these Special Provisions.

(B) Excavation

The subgrade of an operated track shall be maintained with edge of berm at least 7'-0" from centerline of track and not more than 45" below top of rail. Contractor will not be required to make existing section meet this specification if substandard, in which case existing section will be maintained.

(C) Excavation for Structures

The Contractor will be required to take special precaution and care in connection with excavating and shoring pits, and in driving piles or sheeting, for footings adjacent to tracks to provide adequate lateral support for the tracks and the loads which they carry, without disturbance of track alignment and surface, and to avoid obstructing track clearances with working equipment, tools or other material. All plans and calculations for shoring shall be prepared and signed by a North Carolina Registered Professional Engineer. The Professional Engineer will be responsible for the accuracy for all controlling dimensions as well as the selection of soil design values which will accurately reflect the actual field conditions. The procedure for doing such work, including need of and plans for shoring, shall first be reviewed by the Department Engineer then reviewed and approved by the Railroad Engineer, but such approval shall not relieve the Contractor from liability.

Additionally, a walkway with handrail protection may be required as noted in the section for Trainman's walkways herein.

(D) Demolition, Erection, Hoisting

(1) Railroad tracks and other Company corridor or railroad property must be protected from damage during the procedure.
(2) The Contractor is required to submit a plan showing the location of cranes, horizontally and vertically, operating radii, with delivery or disposal locations shown. The location of all tracks and other railroad facilities as well as all obstructions such as wire lines, poles, adjacent structures, etc. must also be shown.
(3) Crane rating sheets showing cranes to be adequate for 150 percent of the actual weight of the pick. A complete set of crane charts, including crane, counterweight, and boom nomenclature is to be submitted.

(4) Plans and computations showing the weight of the pick must be submitted. Calculations shall be made from plans of the existing and/or proposed structure showing complete and sufficient details with supporting data for the demolition or erection of the structure. If plans do not exist, lifting weights must be calculated from field measurements. The field measurements are to be made under the supervision of the North Carolina Registered Professional Engineer submitting the procedure and calculations.

(5) A data sheet must be submitted listing the types, size, and arrangements of all rigging and connection equipment.

(6) A complete procedure is to be submitted, including the order of lifts, time required for each lift, and any repositioning or re-hitching of the crane or cranes.

(7) All erection or demolition plans, procedures, data sheets, etc. submitted must be prepared, signed and sealed by a North Carolina Registered Professional Engineer.

(8) The Railroad's engineer must be present at the site during the entire demolition and erection procedure period.

(9) All procedures, plans and calculations shall first be approved by the Engineer and the Railroad Engineer, but such approval does not relieve the Contractor from liability.

(E) Blasting

The Contractor shall obtain advance approval of the Railroad Engineer and the Engineer for use of explosives on or adjacent to Company corridor. The request for permission to use explosives shall include a detailed blasting plan. If permission for use of explosives is granted, the Contractor will be required to comply with the following:

(1) Blasting shall be done with light charges under the direct supervision of a responsible officer or employee of the Contractor and a licensed blaster.

(2) Electric detonating fuses shall not be used because of the possibility of premature explosions resulting from operation of two-way radios.

(3) No blasting shall be done without the presence of an authorized representative of the Railroad. At least 72 hours advance notice to the person designated in the Railroad's notice of authorization to proceed will be required to arrange for the presence of an authorized Railroad representative and such flagging as the Railroad may require.

(4) Have at the job site adequate equipment, labor and materials and allow sufficient time to clean up debris resulting from the blasting without delay to trains, as well as correcting at his expense any track misalignment or other damage to Company corridor resulting from the blasting as directed by the Railway's authorized representative. It his actions result in delay of trains, the Contractor shall bear the entire cost thereof.

The Railroad representative/engineer will:

(1) Determine the approximate location of trains and advise the Contractor the approximate amount of time available for the blasting operation and clean-up.

(2) Have the authority to order discontinuance of blasting if, in his opinion, blasting is too hazardous or is not in accordance with these special provisions.

(F) Maintenance of Railroad Facilities

The Contractor will be required to maintain all ditches and drainage structures free of silt or other obstructions that may result from construction operations and provide and maintain any erosion control measures as required. The Contractor will promptly repair eroded areas within Company's corridor and repair any other damage to the property of the Company or its tenants.

All such maintenance and repair of damages due to the Contractor's operations shall be done at the Contractor's expense.

(G) Storage of Materials and Equipment

Materials and equipment shall not be stored where they will interfere with railroad operations, nor on the corridor of the Company without first having obtained permission from the Railroad Engineer. Such permission will be with the understanding that neither the Company nor Railroad will be liable for damage to such material and equipment from any cause and that the Railroad Engineer may move or require the Contractor to move, at the Contractor's expense, such material and equipment.

All grading or construction machinery that is left idle or parked near the track unattended by a watchman shall be effectively immobilized so that it cannot be moved by unauthorized persons. The contractor shall protect, defend, indemnify and save Company and Railroad, and any associated, controlled or affiliated corporation, harmless from and against all losses, costs, expenses, claim or liability for loss or damage to property or the loss of life or personal injury, arising out of or incident to the contractor's failure to immobilize grading or construction machinery.

(H) Cleanup

During construction of the project, the contractor shall furnish garbage disposal containers and dispose of all trash appropriately. The contractor shall clean the construction site periodically as requested by the Department's Engineer or the Railroad Engineer of all waste, rubbish and unused construction material. The removal of waste and debris shall be the responsibility of the Contractor. Unused construction materials shall be stockpiled in an orderly fashion at a location that will not interfere with train operations and the construction progress. If the contractor does not clean the construction site after receiving notification, other forces may be used to clean the site of waste and rubbish. If other forces are used, monies will be deducted from the contractor for the cost of the cleanup.

Upon completion of the work, the Contractor shall remove from within the limits of the Company's right of way, all machinery, equipment, surplus materials, falsework, rubbish or temporary buildings of the Contractor, and leave said right of way in a neat condition satisfactory to the Chief Engineer of the Railroad or his authorized representative and satisfactory to the Company's authorized representative. Cleanup also includes removal, replacement or cleaning of soiled or contaminated ballast in the construction area.

DAMAGES

The contractor shall assume all liability for any and all damages to his work, employees, servants, equipment and materials caused by railroad traffic.

Any cost incurred by the Company of Railroad for repairing damages to its corridor or to property of its tenants, caused by or resulting from the operations of the Contractor, shall be paid directly to the Company or Railroad by the Contractor.

CONTRACTOR FURNISHED TWO WAY RADIOS

The Contractor shall furnish a minimum of 3 push to talk, two way radios that operate on a frequency unique to the project and separate from NSR frequencies. The operational frequency should not be the same as the frequency on adjacent jobs unless directed by the Railroad Engineer. The radios will be used for communication between the RWIC/flagman or the Railroad's designated contact and the Contractor's Superintendent or designated contact on the job for safety. The Contractor will need to maintain at least 3 working radios at all time during the project. Project conditions and the contactors work may require the need for more than 3 radios on the project. It shall be the Contractors responsibility to furnish the number of radios required by NSR and NCDOT to maintain safety on the project. Failure on the part of the contractor to have working radios on site, can result in suspension of the work until the requirements of provision is met. The will be no direct payment for the cost of furnishing the radios. The cost will be included in other items of work in the contract.

Contractor shall provide radios capable of transmitting and receiving clearly, from any location within the project limits. Relaying messages from one radio operator to another will not be an acceptable method. Any upgrades or additional equipment necessary to provide clear transmissions between two single radios, including signal repeaters, will be considered incidental to the provision of radios and will not be subject to additional compensation.

The Contractor will need to submit information about the radios prior to use for approval by the Railroad.

The contractor shall have no claims whatsoever against the Railroad or the Department for any delays or additional cost incurred as a result of failure to have the required number of working radios on site each day or as a result of insufficient radio communication.

FLAGGING SERVICES

All work to be performed by the Contractor within the Railroad Right of Way shall require a flagman be present. Any work to be performed by the contractor requiring flagging service shall be deferred by the contractor until the flagging protection required by the railroad is available at the job site. It will take approximately 30 days from the date the railroad receives notification of award from the NCDOT to provide flagging protection for this project.

(A) When Required

Under the terms of the agreement between the Department and the Railroad, the Railroad has sole authority to determine the need for flagging required to protect its operations.

In general, the requirements of such services will be whenever the Contractor's personnel or equipment are or are likely to be, working on the Railroad's right-of-way, or across, over, adjacent to, or under a track, or when such work has disturbed or is likely to disturb a railroad structure or the railroad roadbed or surface and alignment of any track to such extent that the movement of trains must be controlled by flagging.

Normally, the Railroad will assign one flagman to a project; but in some cases, more than one may be necessary, such as yard limits where three (3) flagmen may be required. The Railroad Engineer will determine how many flagmen are required for the job. However, if the Contractor works within distances that violates instructions given by the Railroad's authorized representative or performs work that has not been scheduled with the Railroad's authorized representative, a flagman or flagmen may be required full time until the project has been completed. Any additional cost for additional flagging as a result of the Contractor violating the instruction of the RWIC/flagman will be the contractor's responsibility and shall be deducted from the contractor's monies.

(B) Scheduling and Notification

(1) The Contractor's work requiring railroad flagging services shall be scheduled in advance and updated weekly to insure flagman coverage for the work to be performed. Flagging services will be provided by the Railroad for work required by the contract to complete the project. The contractor's work schedule shall be during normal daylight hours for safety concerns. Nighttime operations are not permitted without prior written approval from the Railroad Engineer and the Department's Engineer and shall be only be considered on a case by case basis.

(2) Not later than the time that approval is initially requested to begin work on Company corridor, the Contractor shall furnish to the Company, Railroad and the Department a schedule for all work required to complete the portion of the project within Company corridor and arrange for a job site meeting between the Contractor, the Department, and the Railroad's authorized representative. Flagman or Flagmen may not be provided until the job site meeting has been conducted and the Contractor's work scheduled.

(3) The Contractor, through the Engineer, will be required to give the Railroad representative at least 10 working days of advance written notice of intent to begin work within Company corridor in accordance with this special provision. Once begun, when such work is then suspended at any time, or for any reason, the Contractor, through the Engineer, will be required to give the Railroad representative at least 3 working days of advance notice before resuming work on Railroad right of way. Such notices shall include sufficient details of the proposed work to enable the Railroad representative to determine if flagging will be required. If such notice is in writing, the Contractor shall furnish the Engineer a copy; if notice is given verbally, it shall be confirmed in writing with copy to the Engineer.

(4) If flagging is required, no work shall be undertaken until the flagman, or flagmen are present at the job site. It may take up to 30 days to obtain flagging initially from the Railroad. When flagging begins, the flagman is usually assigned by the Railroad to work at the project site on a continual basis until no longer needed and

cannot be called for on a spot basis. If flagging becomes unnecessary and is suspended, it may take up to 30 days to again obtain from the Railroad. Due to Railroad labor agreements, it is necessary to give 5 working days' notice before flagging service may be discontinued and responsibility for payment stopped.

(5) If, after the flagman is assigned to the project site, an emergency arises that requires the flagman's presence elsewhere, then the Contractor shall delay work on Railroad right of way until such time as the flagman is again available. Any additional costs resulting from such delay shall be borne by the Contractor and not the Company, Department or Railroad.

(C) Payment

The Department will be responsible for paying the Railroad directly for any and all costs of flagging which may be required to accomplish the construction.

Any additional cost for additional flagging as a result of work that is determined to be for the benefit of the Contractor will be the contractor's responsibility and shall be deducted from the Contractor's monies.

(1) The estimated cost of flagging service is the current rate per day based on a 10-hour work day. This cost includes the base pay for each flagman, overhead, and a per diem charge for travel expenses, meals and lodging. The charge by the Railroad will be the actual cost based on the rate of pay for the Railroad's employees who are available for flagging service at the time the service is required.

(2) Work by a flagman in excess of 8 hours per day or 40 hours per week, but not more than 12 hours a day will result in overtime pay at 1½ times the appropriate rate. Work by a flagman in excess of 12 hours per day will result in overtime pay at 2 times the appropriate rate. If work is performed on a holiday, the flagging rate is 2½ times the normal rate.

(3) Railroad work involved in preparing and handling bills will also be charged to the Department. Charges to the Department by the Railroad shall be in accordance with applicable provisions of the Federal-Aid Policy Guide, Title 23 Subchapter B, Part 140I and Subchapter G, Part 646B issued by the Federal Highway Administration on December 9, 1991, including all current amendments. Flagging costs are subject to change. The above estimates of flagging costs are provided for information only and are not binding in any way.

(D) Verification

The Railroad flagman assigned to the project will be responsible for notifying the Department Engineer upon arrival at the job site on the first day (or as soon thereafter as possible) that flagging services begin and on the last day that he performs such services for each separate period that services are provided. The Department Engineer will document such notification and general flagging times for verification purposes in the project records. When requested, the Department Engineer will also sign the flagman's diary showing daily time spent and activity at the project site. Also if requested, the flagman will cooperate with the Department by submitting daily timesheets or signing the Department Engineer's diary showing daily time spent at the project site.

Railroad's flagman will electronically enter flagging time via Railroad's electronic billing system. Any complaints concerning flagman or flagmen must be resolved in a timely manner. If need for flagman or flagmen is questioned, please contact Railroad's System Engineer of Public Improvements at (404) 529-1641. All verbal complaints must be confirmed in writing by the Contractor within 5 working days with copy to the Department Engineer. Address all written correspondence to:

Office of Chief Engineer-Bridges & Structures
Attn: System Engineer of Public Improvements
Norfolk Southern Corporation
1200 Peachtree St. NE
Internal Box 142
Atlanta, GA 30309

HAUL ACROSS RAILROAD

Where the plans show or imply that materials of any nature must be hauled across the Railroad, unless the plans clearly show that the Department has included arrangements for such haul in its agreement with the Railroad, the Contractor will be required to make all necessary arrangements with the Railroad regarding means of transporting such materials across the Railroad. The Contractor will be required to bear all costs incidental to such crossings whether services are performed by the contractor's own forces or by Railroad personnel.

If the Contractor desires to haul across the Railroad for his convenience, the contractor shall make all of the necessary arrangements with the Railroad and the Company for a temporary crossing and shall bear all cost associated with construction and removal of the temporary crossing. The crossing shall only be used at times approved by the Engineer. The project will not be considered complete until all temporary crossing have been removed by the Contractor, unless directed by the Railroad or Company to leave the crossing installed. The Contractor shall be required to execute the Railroad and Company's standard private grade crossing agreement for each crossing installed. The Contractor shall have no claims whatsoever against the Railroad or the Department for denying any temporary crossing for the convenience of the Contractor.

No crossing may be established for use of the Contractor for transporting materials or equipment across the tracks of the Company unless specific authority for its installation, maintenance, necessary watching and flagging thereof and removal, all at the expense of the Contractor, is first obtained from the Railroad Engineer. The approval process for a temporary private crossing agreement executed between the Contractor and Railroad normally takes 90 days.

WORK FOR THE BENEFIT OF THE CONTRACTOR

All temporary or permanent changes in wire lines or other facilities which are considered necessary to the project are shown on the plans; included in the force account agreement between the Department, Company and the Railroad or will be covered by appropriate revisions to same which will be initiated and approved by the Department, Company and/or the Railroad.

Should the Contractor desire any changes in addition to the above, then the Contractor shall make separate arrangements with the Railroad for same to be accomplished at the Contractor's expense. The Contractor shall notify the Department of agreements between the Railroad the and the Contractor for any work for the benefit of the Contractor.

COOPERATION AND DELAYS

It shall be the Contractor's responsibility to arrange a schedule with the Railroad for accomplishing stage construction of work to be done by Railroad crews. In arranging the schedule the contractor shall ascertain, from the Railroad, the lead time required for assembling crews and materials and shall make due allowance therefore. The Contractor shall cooperate with others in the construction of the project to the end that all work may be accomplished to the best advantage.

The Contractor shall insure that all work required to be completed by his forces prior to Railroad's crews schedule move in date is completed. Delays by the Contractor in meeting the schedule can result in delays in rescheduling Railroad crews and result in delays to the project. The Contractor shall have no claims whatsoever against the Railroad or the Department for delays as a result of rescheduling Railroad crews due the Contractor failing to meet his schedule.

No charge or claim of the Contractor against either the Department, Company or the Railroad will be allowed for hindrance or delay on account of railway traffic; any work done by the Railroad or other delays incident to or necessary for safe maintenance of railway traffic or for any delays due to compliance with these special provisions.

The Contractor's attention is called to the fact that neither the Department, Company nor Railroad assumes any responsibility for any work performed by others in connection with the construction of the project, and the Contractor shall have no claim whatsoever against the Department, Company or Railroad for any inconvenience, delay, or additional cost incurred by him on account of such operations by others.

TRAINMAN'S WALKWAYS

In areas along any existing tracks, on the side opposite of the track from where the work will be done; existing trainman walkways will be maintained at a distance not less than 10' from the centerline for the existing track. If the trainman's walkway does not exist, it will not be built or maintained unless shown on the plans. In areas of new construction along turnouts/switches, signals and derails, trainman walkways will be constructed and maintained not less than 10' from the centerline of the track. The trainman's walkway will extend from the point of switch through the derail. The trainman's walkway is an unobstructed continuous space suitable for the trainman to walk along the side of trains. Any temporary impediments to walkways and track drainage encroachments or obstructions allowed during work hours while the Railway's protective service is provided shall be removed before the close of each work day. If there is any excavation near the walkway, a handrail, with 10'-0" minimum clearance from centerline of track, shall be placed.

CERTIFICATION FOR FEDERAL-AID CONTRACTS:

(3-21-90) SP1 G85

The prospective participant certifies, by signing and submitting this bid or proposal, to the best of his or her knowledge and belief, that:

(A) No Federal appropriated funds have been paid or will be paid, by or on behalf of the undersigned, to any person for influencing or attempting to influence an officer or employee of any Federal agency, a Member of Congress, an officer or employee of Congress, or an employee of a Member of Congress in connection with the awarding of any Federal contract, the making of any Federal grant, the making of any Federal loan, the entering into of any cooperative agreement, and the extension, continuation, renewal, amendment, or modification of any Federal contract, grant, loan, or cooperative agreement.

(B) If any funds other than Federal appropriated funds have been paid or will be paid to any person for influencing or attempting to influence an officer or employee of any Federal agency, a Member of Congress, an officer or employee of Congress, or an employee of a Member of Congress in connection with this Federal contract, grant, loan, or cooperative agreement, the undersigned shall complete and submit Standard Form-LLL, *Disclosure Form to Report Lobbying*, in accordance with its instructions.

This certification is a material representation of fact upon which reliance was placed when this transaction was made or entered into. Submission of this certification is a prerequisite for making or entering into this transaction imposed by *Section 1352, Title 31, U.S. Code*. Any person who fails to file the required certification shall be subject to a civil penalty of not less than $10,000 and not more than $100,000 for each such failure.

The prospective participant also agrees by submitting his or her bid or proposal that he or she shall require that the language of this certification be included in all lower tier subcontracts, which exceed $100,000 and that all such subrecipients shall certify and disclose accordingly.

CONTRACTOR'S LICENSE REQUIREMENTS:

(7-1-95) 102-14 SP1 G88

If the successful bidder does not hold the proper license to perform any plumbing, heating, air conditioning, or electrical work in this contract, he will be required to sublet such work to a contractor properly licensed in accordance with *Article 2 of Chapter 87 of the General Statutes* (licensing of heating, plumbing, and air conditioning contractors) and *Article 4 of Chapter 87* of the *General Statutes* (licensing of electrical contractors).

U.S. DEPARTMENT OF TRANSPORTATION HOTLINE:

(11-22-94) 108-5 SP1 G100

To report bid rigging activities call: **1-800-424-9071**

The U.S. Department of Transportation (DOT) operates the above toll-free hotline Monday through Friday, 8:00 a.m. to 5:00 p.m. eastern time. Anyone with knowledge of possible bid rigging, bidder collusion, or other fraudulent activities should use the hotline to report such activities.

The hotline is part of the DOT's continuing effort to identify and investigate highway construction contract fraud and abuse is operated under the direction of the DOT Inspector General. All information will be treated confidentially and caller anonymity will be respected.

SUBSURFACE INFORMATION:
(7-1-95) 450 SP1 G112 D

Subsurface information is available on the railroad, roadway, and structure portions of this project.

LOCATING EXISTING UNDERGROUND UTILITIES:
(3-20-12) 105 SP1 G115

Revise the *2012 Standard Specifications* as follows:

Page 1-43, Article 105-8, line 28, after the first sentence, add the following:

Identify excavation locations by means of pre-marking with white paint, flags, or stakes or provide a specific written description of the location in the locate request.

RESOURCE CONSERVATION:
(5-21-13) 104-13 SP1 G118

In accordance with North Carolina Executive Order 156, NCGS 130A-309.14(2), and NCGS 136-28.8, it is the policy of the Department to aid in the reduction of materials that become a part of our solid waste stream, to divert materials from landfills, and to find ways to recycle and reuse materials for the benefit of the Citizens of North Carolina.

Initiate, develop and use products and construction methods that incorporate the use of recycled or solid waste products in accordance with Article 104-13 of the *2012 Standard Specifications*. Report the quantities of reused or recycled materials either incorporated in the project or diverted from landfills on the Project Construction Reuse and Recycling Reporting Form.

A location-based tool for finding local recycling facilities and the Project Construction Reuse and Recycling Reporting Form are available at:

http://connect.ncdot.gov/resources/Environmental/Pages/North-Carolina-Recycling-Locations.aspx

DOMESTIC STEEL:
(4-16-13) 106 SP1 G120

Revise the *2012 Standard Specifications* as follows:

Page 1-49, Subarticle 106-1(B) Domestic Steel, lines 2-7, replace the first paragraph with the following:

All steel and iron products that are permanently incorporated into this project shall be produced in the United States except minimal amounts of foreign steel and iron products may be used provided the combined material cost of the items involved does not exceed 0.1% of the total amount bid for the entire project or $2,500, whichever is greater. If invoices showing the cost of the material are not provided, the amount of the bid item involving the foreign material will be used for calculations. This minimal amount of foreign produced steel and iron products permitted for use is not applicable to high strength fasteners. Domestically produced high strength fasteners are required.

PORTABLE CONCRETE BARRIER - (Partial Payments for Materials):
(7-1-95) (Rev. 8-16-11) 1170-4 SP1 G121

When so authorized by the Engineer, partial materials payments will be made up to 95 percent of the delivered cost of portable concrete barrier, provided that these materials have been delivered on the project and stored in an acceptable manner, and further provided the documents listed in Subarticle 109-5(C) of the *2012 Standard Specifications* have been furnished to the Engineer.

The provisions of Subarticle 109-5(B) of the *2012 Standard Specifications* will apply to the portable concrete barrier.

MAINTENANCE OF THE PROJECT:
(11-20-07) (Rev. 1-17-12) 104-10 SP1 G125

Revise the *2012 Standard Specifications* as follows:

Page 1-35, Article 104-10 Maintenance of the Project, line 25, add the following after the first sentence of the first paragraph:

All guardrail/guiderail within the project limits shall be included in this maintenance.

Page 1-35, Article 104-10 Maintenance of the Project, line 30, add the following as the last sentence of the first paragraph:

The Contractor shall perform weekly inspections of guardrail and guiderail and shall report damages to the Engineer on the same day of the weekly inspection. *Where damaged guardrail or guiderail is repaired or replaced as a result of maintaining the project in* accordance with this article, such repair or replacement shall be performed within 7 consecutive calendar days of such inspection report.

Page 1-35, Article 104-10 Maintenance of the Project, lines 42-44, replace the last sentence of the last paragraph with the following:

The Contractor will not be directly compensated for any maintenance operations necessary, except for maintenance of guardrail/guiderail, as this work will be considered incidental to the work covered by the various contract items. The provisions of Article 104-7, Extra Work, and Article 104-8, Compensation and Record Keeping will apply to authorized maintenance of guardrail/guiderail. Performance of weekly inspections of guardrail/guiderail, and the damage reports required as described above, will be considered to be an incidental part of the work being paid for by the various contract items.

COOPERATION BETWEEN CONTRACTORS:

The Contractor attention is directed to Article 105-7 of the *2012 Standard Specifications*.

P-5206A Rowan County is currently under construction located in the vicinity of SR 1560 (Cedar Spring Road) of the P-5206B portion of this Contract.

The Contractor on this project shall cooperate with the Contractor working within or adjacent to the limits of this project to the extent that the work can be carried out to the best advantage of all concerned.

TWELVE MONTH GUARANTEE:

(7-15-03) 108 SP1 G145

(A) The Contractor shall guarantee materials and workmanship against latent and patent defects arising from faulty materials, faulty workmanship or negligence for a period of twelve months following the date of final acceptance of the work for maintenance and shall replace such defective materials and workmanship without cost to the Department. The Contractor will not be responsible for damage due to faulty design, normal wear and tear, for negligence on the part of the Department, and/or for use in excess of the design.

(B) Where items of equipment or material carry a manufacturer's guarantee for any period in excess of twelve months, then the manufacturer's guarantee shall apply for that particular piece of equipment or material. The Department's first remedy shall be through the manufacturer although the Contractor is responsible for invoking the warranted repair work with the manufacturer. The Contractor's responsibility shall be limited to the term of the manufacturer's guarantee. NCDOT would be afforded the same warranty as provided by the Manufacturer.

This guarantee provision shall be invoked only for major components of work in which the Contractor would be wholly responsible for under the terms of the contract. Examples would include pavement structures, bridge components, and sign structures. This provision will not be used as a mechanism to force the Contractor to return to the project to make repairs or perform additional work that the Department would normally compensate the Contractor for. In addition, routine maintenance activities (i.e. mowing grass, debris removal, ruts in earth shoulders,) are not parts of this guarantee.

Appropriate provisions of the payment and/or performance bonds shall cover this guarantee for the project.

To ensure uniform application statewide the Division Engineer will forward details regarding the circumstances surrounding any proposed guarantee repairs to the Chief Engineer for review and approval prior to the work being performed.

GIFTS FROM VENDORS AND CONTRACTORS:

(12-15-09) 107-1 SP1 G152

By Executive Order 24, issued by Governor Perdue, and *N.C.G.S.§ 133-32,* it is unlawful for any vendor or contractor (i.e. architect, bidder, contractor, construction manager, design professional, engineer, landlord, offeror, seller, subcontractor, supplier, or vendor), to make gifts or to give favors to any State employee of the Governor's Cabinet Agencies (i.e. Administration, Commerce, Correction, Crime Control and Public Safety, Cultural Resources, Environment and Natural Resources, Health and Human Services, Juvenile Justice and Delinquency Prevention, Revenue, Transportation, and the Office of the Governor). This prohibition covers those vendors and contractors who:

(A) Have a contract with a governmental agency; or
(B) Have performed under such a contract within the past year; or
(C) Anticipate bidding on such a contract in the future.

For additional information regarding the specific requirements and exemptions, vendors and contractors are encouraged to review Executive Order 24 and *N.C.G.S. § 133-32.*

Executive Order 24 also encouraged and invited other State Agencies to implement the requirements and prohibitions of the Executive Order to their agencies. Vendors and contractors should contact other State Agencies to determine if those agencies have adopted Executive Order 24.

EROSION AND SEDIMENT CONTROL/STORMWATER CERTIFICATION:

(1-16-07) (Rev 9-18-12) 105-16, 225-2, 16 SP1 G180

General

Schedule and conduct construction activities in a manner that will minimize soil erosion and the resulting sedimentation and turbidity of surface waters. Comply with the requirements herein regardless of whether or not a National Pollution discharge Elimination System (NPDES) permit for the work is required.

Establish a chain of responsibility for operations and subcontractors' operations to ensure that the *Erosion and Sediment Control/Stormwater Pollution Prevention Plan* is implemented and maintained over the life of the contract.

(A) *Certified Supervisor* - Provide a certified Erosion and Sediment Control/Stormwater Supervisor to manage the Contractor and subcontractor operations, insure compliance with Federal, State and Local ordinances and regulations, and manage the Quality Control Program.

(B) *Certified Foreman* - Provide a certified, trained foreman for each construction operation that increases the potential for soil erosion or the possible sedimentation and turbidity of surface waters.

(C) *Certified Installer* - Provide a certified installer to install or direct the installation for erosion or sediment/stormwater control practices.

(D) *Certified Designer* - Provide a certified designer for the design of the erosion and sediment control/stormwater component of reclamation plans and, if applicable, for the design of the project erosion and sediment control/stormwater plan.

Roles and Responsibilities

(A) *Certified Erosion and Sediment Control/Stormwater Supervisor* - The Certified Supervisor shall be Level II and responsible for ensuring the erosion and sediment control/stormwater plan is adequately implemented and maintained on the project and for conducting the quality control program. The Certified Supervisor shall be on the project within 24 hours notice from initial exposure of an erodible surface to the project's final acceptance. Perform the following duties:

(1) Manage Operations - Coordinate and schedule the work of subcontractors so that erosion and sediment control/stormwater measures are fully executed for each operation and in a timely manner over the duration of the contract.

(a) Oversee the work of subcontractors so that appropriate erosion and sediment control/stormwater preventive measures are conformed to at each stage of the work.

(b) Prepare the required National Pollutant Discharge Elimination System (NPDES) Inspection Record and submit to the Engineer.

(c) Attend all weekly or monthly construction meetings to discuss the findings of the NPDES inspection and other related issues.

(d) Implement the erosion and sediment control/stormwater site plans requested.

(e) Provide any needed erosion and sediment control/stormwater practices for the Contractor's temporary work not shown on the plans, such as, but not limited to work platforms, temporary construction, pumping operations, plant and storage yards, and cofferdams.

(f) Acquire applicable permits and comply with requirements for borrow pits, dewatering, and any temporary work conducted by the Contractor in jurisdictional areas.

(g) Conduct all erosion and sediment control/stormwater work in a timely and workmanlike manner.

(h) Fully perform and install erosion and sediment control/stormwater work prior to any suspension of the work.

(i) Coordinate with Department, Federal, State and Local Regulatory agencies on resolution of erosion and sediment control/stormwater issues due to the Contractor's operations.

(j) Ensure that proper cleanup occurs from vehicle tracking on paved surfaces or any location where sediment leaves the Right-of-Way.

(k) Have available a set of erosion and sediment control/stormwater plans that are initialed and include the installation date of Best Management Practices. These practices shall include temporary and permanent groundcover and be properly updated to reflect necessary plan and field changes for use and review by Department personnel as well as regulatory agencies.

(2) Requirements set forth under the NPDES Permit - The Department's NPDES Stormwater permit (NCS000250) outlines certain objectives and management measures pertaining to construction activities. The permit references *NCG010000, General Permit to Discharge Stormwater* under the NPDES, and states that the Department shall incorporate the applicable requirements into its delegated Erosion and Sediment Control Program for construction activities disturbing one or more acres of land. The Department further incorporates these requirements on all contracted bridge and culvert work at jurisdictional waters, regardless of size. Some of the requirements are, but are not limited to:

(a) Control project site waste to prevent contamination of surface or ground waters of the state, i.e. from equipment operation/maintenance, construction materials, concrete washout, chemicals, litter, fuels, lubricants, coolants, hydraulic fluids, any other petroleum products, and sanitary waste.

(b) Inspect erosion and sediment control/stormwater devices and stormwater discharge outfalls at least once every 7 calendar days, twice weekly for construction related *Federal Clean Water Act, Section 303(d)* impaired streams with turbidity violations, and within 24 hours after a significant rainfall event of 0.5 inch that occurs within a 24 hour period.

(c) Maintain an onsite rain gauge or use the Department's Multi-Sensor Precipitation Estimate website to maintain a daily record of rainfall amounts and dates.

(d) Maintain erosion and sediment control/stormwater inspection records for review by Department and Regulatory personnel upon request.

(e) Implement approved reclamation plans on all borrow pits, waste sites and staging areas.

(f) Maintain a log of turbidity test results as outlined in the Department's Procedure for Monitoring Borrow Pit Discharge.

(g) Provide secondary containment for bulk storage of liquid materials.

(h) Provide training for employees concerning general erosion and sediment control/stormwater awareness, the Department's NPDES Stormwater Permit NCS000250 requirements, and the applicable requirements of the *General Permit, NCG010000.*

(i) Report violations of the NPDES permit to the Engineer immediately who will notify the Division of Water Quality Regional Office within 24 hours of becoming aware of the violation.

(3) Quality Control Program - Maintain a quality control program to control erosion, prevent sedimentation and follow provisions/conditions of permits. The quality control program shall:

(a) Follow permit requirements related to the Contractor and subcontractors' construction activities.

(b) Ensure that all operators and subcontractors on site have the proper erosion and sediment control/stormwater certification.

(c) Notify the Engineer when the required certified erosion and sediment control/stormwater personnel are not available on the job site when needed.

(d) Conduct the inspections required by the NPDES permit.

(e) Take corrective actions in the proper timeframe as required by the NPDES permit for problem areas identified during the NPDES inspections.

(f) Incorporate erosion control into the work in a timely manner and stabilize disturbed areas with mulch/seed or vegetative cover on a section-by-section basis.

(g) Use flocculants approved by state regulatory authorities where appropriate and where required for turbidity and sedimentation reduction.

(h) Ensure proper installation and maintenance of temporary erosion and sediment control devices.

(i) Remove temporary erosion or sediment control devices when they are no longer necessary as agreed upon by the Engineer.

(j) The Contractor's quality control and inspection procedures shall be subject to review by the Engineer. Maintain NPDES inspection records and make records available at all times for verification by the Engineer.

(B) *Certified Foreman* - At least one Certified Foreman shall be onsite for each type of work listed herein during the respective construction activities to control erosion, prevent sedimentation and follow permit provisions:

(1) Foreman in charge of grading activities
(2) Foreman in charge of bridge or culvert construction over jurisdictional areas
(3) Foreman in charge of utility activities

The Contractor may request to use the same person as the Level II Supervisor and Level II Foreman. This person shall be onsite whenever construction activities as described above are taking place. This request shall be approved by the Engineer prior to work beginning.

The Contractor may request to name a single Level II Foreman to oversee multiple construction activities on small bridge or culvert replacement projects. This request shall be approved by the Engineer prior to work beginning.

(C) *Certified Installers* - Provide at least one onsite, Level I Certified Installer for each of the following erosion and sediment control/stormwater crew:

(1) Seeding and Mulching
(2) Temporary Seeding
(3) Temporary Mulching
(4) Sodding
(5) Silt fence or other perimeter erosion/sediment control device installations
(6) Erosion control blanket installation
(7) Hydraulic tackifier installation
(8) Turbidity curtain installation
(9) Rock ditch check/sediment dam installation
(10) Ditch liner/matting installation
(11) Inlet protection
(12) Riprap placement
(13) Stormwater BMP installations (such as but not limited to level spreaders, retention/detention devices)
(14) Pipe installations within jurisdictional areas

If a Level I *Certified Installer* is not onsite, the Contractor may substitute a Level II Foreman for a Level I Installer, provided the Level II Foreman is not tasked to another crew requiring Level II Foreman oversight.

(D) *Certified Designer* - Include the certification number of the Level III-B Certified Designer on the erosion and sediment control/stormwater component of all reclamation plans and if applicable, the certification number of the Level III-A Certified Designer on the design of the project erosion and sediment control/stormwater plan.

Preconstruction Meeting

Furnish the names of the *Certified Erosion and Sediment Control/Stormwater Supervisor, Certified Foremen, Certified Installers* and *Certified Designer* and notify the Engineer of changes in certified personnel over the life of the contract within 2 days of change.

Ethical Responsibility

Any company performing work for the North Carolina Department of Transportation has the ethical responsibility to fully disclose any reprimand or dismissal of an employee resulting from improper testing or falsification of records.

Revocation or Suspension of Certification

Upon recommendation of the Chief Engineer to the certification entity, certification for *Supervisor*, *Certified Foremen*, *Certified Installers* and *Certified Designer* may be revoked or suspended with the issuance of an *Immediate Corrective Action (ICA), Notice of Violation (NOV),* or C*ease and Desist Order* for erosion and sediment control/stormwater related issues.

The Chief Engineer may recommend suspension or permanent revocation of certification due to the following:

(A) Failure to adequately perform the duties as defined within this certification provision.
(B) Issuance of an ICA, NOV, or Cease and Desist Order.
(C) Failure to fully perform environmental commitments as detailed within the permit conditions and specifications.
(D) Demonstration of erroneous documentation or reporting techniques.
(E) Cheating or copying another candidate's work on an examination.
(F) Intentional falsification of records.
(G) Directing a subordinate under direct or indirect supervision to perform any of the above actions.
(H) Dismissal from a company for any of the above reasons.
(I) Suspension or revocation of one's certification by another entity.

Suspension or revocation of a certification will be sent by certified mail to the certificant and the Corporate Head of the company that employs the certificant.

A certificant has the right to appeal any adverse action which results in suspension or permanent revocation of certification by responding, in writing, to the Chief Engineer within 10 calendar days after receiving notice of the proposed adverse action.

Chief Engineer
1536 Mail Service Center
Raleigh, NC 27699-1536

Failure to appeal within 10 calendar days will result in the proposed adverse action becoming effective on the date specified on the certified notice. Failure to appeal within the time specified will result in a waiver of all future appeal rights regarding the adverse action taken. The certificant will not be allowed to perform duties associated with the certification during the appeal process.

The Chief Engineer will hear the appeal and make a decision within 7 days of hearing the appeal. Decision of the Chief Engineer will be final and will be made in writing to the certificant.

If a certification is temporarily suspended, the certificant shall pass any applicable written examination and any proficiency examination, at the conclusion of the specified suspension period, prior to having the certification reinstated.

Measurement and Payment

Certified Erosion and Sediment Control/Stormwater Supervisor, Certified Foremen, Certified Installers and *Certified Designer* will be incidental to the project for which no direct compensation will be made.

PROCEDURE FOR MONITORING BORROW PIT DISCHARGE:

(2-20-07) (Rev. 3-19-13) 105-16, 230, 801 SP1 G181

Water discharge from borrow pit sites shall not cause surface waters to exceed 50 NTUs (nephelometric turbidity unit) in streams not designated as trout waters and 10 NTUs in streams, lakes or reservoirs designated as trout waters. For lakes and reservoirs not designated as trout waters, the turbidity shall not exceed 25 NTUs. If the turbidity exceeds these levels due to natural background conditions, the existing turbidity level shall not be increased.

If during any operating day, the downstream water quality exceeds the standard, the Contractor shall do all of the following:

(A) Either cease discharge or modify the discharge volume or turbidity levels to bring the downstream turbidity levels into compliance, or

(B) Evaluate the upstream conditions to determine if the exceedance of the standard is due to natural background conditions. If the background turbidity measurements exceed the standard, operation of the pit and discharge can continue as long as the stream turbidity levels are not increased due to the discharge.

(C) Measure and record the turbidity test results (time, date and sampler) at all defined sampling locations 30 minutes after startup and at a minimum, one additional sampling of all sampling locations during that 24-hour period in which the borrow pit is discharging.

(D) Notify DWQ within 24 hours of any stream turbidity standard exceedances that are not brought into compliance.

During the Environmental Assessment required by Article 230-4 of the *2012 Standard Specifications*, the Contractor shall define the point at which the discharge enters into the State's surface waters and the appropriate sampling locations. Sampling locations shall include points upstream and downstream from the point at which the discharge enters these waters. Upstream sampling location shall be located so that it is not influenced by backwater conditions and represents natural background conditions. Downstream sampling location shall be located at the point where complete mixing of the discharge and receiving water has occurred.

The discharge shall be closely monitored when water from the dewatering activities is introduced into jurisdictional wetlands. Any time visible sedimentation (deposition of sediment) on the wetland surface is observed, the dewatering activity will be suspended until turbidity levels in the stilling basin can be reduced to a level where sediment deposition does not occur. Staining of wetland surfaces from suspended clay particles, occurring after evaporation or infiltration, does not constitute sedimentation. No activities shall occur in wetlands that adversely affect the functioning of a wetland. Visible sedimentation will be considered an indication of possible adverse impacts on wetland use.

The Engineer will perform independent turbidity tests on a random basis. These results will be maintained in a log within the project records. Records will include, at a minimum, turbidity test results, time, date and name of sampler. Should the Department's test results exceed those of the Contractor's test results, an immediate test shall be performed jointly with the results superseding the previous test results of both the Department and the Contractor.

The Contractor shall use the *NCDOT Turbidity Reduction Options for Borrow Pits Matrix,* available at http://www.ncdot.gov/doh/operations/dp_chief_eng/roadside/fieldops/downloads/Files/TurbidityReductionOptionSheet.pdf to plan, design, construct, and maintain BMPs to address water quality standards. Tier I Methods include stilling basins which are standard compensatory BMPs. Other Tier I methods are noncompensatory and shall be used when needed to meet the stream turbidity standards. Tier II Methods are also noncompensatory and are options that may be needed for protection of rare or unique resources or where special environmental conditions exist at the site which have led to additional requirements being placed in the DWQ's 401 Certifications and approval letters, Isolated Wetland Permits, Riparian Buffer Authorization or a DOT Reclamation Plan's Environmental Assessment for the specific site. Should the Contractor exhaust all Tier I Methods on a site exclusive of rare or unique resources or special environmental conditions, Tier II Methods may be required by regulators on a case by case basis per supplemental agreement.

The Contractor may use cation exchange capacity (CEC) values from proposed site borings to plan and develop the bid for the project. CEC values exceeding 15 milliequivalents per 100 grams of soil may indicate a high potential for turbidity and should be avoided when dewatering into surface water is proposed.

No additional compensation for monitoring borrow pit discharge will be paid.

SUPPLEMENTAL CONTRACTOR EROSION CONTROL RESPONSIBILITIES:

(2-19-13) SP1 G182

The Contractor shall be required to install and maintain erosion control devices and provide temporary and eventual permanent stabilization to disturbed areas until the final completion of the project contract as directed. In addition, the Contractor shall adhere to the requirements of the Erosion and Sediment Control/Stormwater Certification provided elsewhere in this contract until completion of the project. After the Contractor has completed the grading work and while Norfolk Southern's crews are installing the new track, the Contractor shall maintain erosion control responsibilities and work will continue to be required and not limited to, monitoring

erosion control devices on a weekly basis and after each rainfall that equals or exceeds 0.5 inches, NPDES documentation, installation and maintenance of additional erosion control devices, providing temporary groundcover, and establishment of permanent vegetation on disturbed slopes.

Payment for installation and maintenance of temporary erosion control measures and providing temporary and permanent stabilization will be paid for at the appropriate contract unit price for the work. Mobilization payment for this work shall be paid as described in "Supplemental Response for Erosion Control." No additional payment shall be made for these supplemental responsibilities and work.

SUPPLEMENTAL RESPONSE FOR EROSION CONTROL:
(2-19-13) SP1 G183

Description

Furnish the labor, materials, tools and equipment necessary to move personnel, equipment, and supplies to the project necessary for the pursuit of any or all of the erosion control responsibilities of the Contractor. This provision will only be applicable after the Contractor has completed all of his work, with the exception of maintenance and removal of erosion control, and has demobilized his work force while waiting for NSR to complete track construction. Payment will only be made for occurrences where the contractor mobilizes men and equipment to perform necessary erosion control measures as required by the Department's Engineer.

Construction Methods

Contractor shall perform an erosion control action as described in, but not limited to, the NPDES Inspection Form SPPP30. Each erosion control action may include one or more of the work items on the form, or a separate action that is the primary responsibility of the Contractor.

Measurement and Payment

Supplemental Response for Erosion Control will be measured and paid for by counting the actual number of times the Contractor moves onto the project, including borrow and waste sites, and satisfactorily completes an erosion control action described in Form 1675. The provisions of Article 104-5 of the *Standard Specifications* will not apply to this item of work.

Payment will be made under:

Pay Item	Pay Unit
Supplemental Response for Erosion Control	Each

EMPLOYMENT:
(11-15-11) (Rev. 1-17-12) 108, 102 SP1 G184

Revise the *2012 Standard Specifications* as follows:

Page 1-20, Subarticle 102-15(O), delete and replace with the following:

(O) Failure to restrict a former Department employee as prohibited by Article 108-5.

Page 1-65, Article 108-5 Character of Workmen, Methods, and Equipment, line 32, delete all of line 32, the first sentence of the second paragraph and the first word of the second sentence of the second paragraph.

STATE HIGHWAY ADMINISTRATOR TITLE CHANGE:
(9-18-12) SP1 G185

Revise the *2012 Standard Specifications* as follows:

Replace all references to "State Highway Administrator" with "Chief Engineer".

PROJECT SPECIAL PROVISIONS

ROADWAY

CLEARING AND GRUBBING - METHOD III:

(4-6-06) (Rev. 1-17-12) 200 SP2 R02B

Perform clearing on this project to the limits established by Method "III" shown on Standard Drawing No. 200.03 of the *2012 Roadway Standard Drawings*.

SHOULDER AND FILL SLOPE MATERIAL:

(5-21-02) 235, 560 SP2 R45 A

Description

Perform the required shoulder and slope construction for this project in accordance with the applicable requirements of Section 560 and Section 235 of the *2012 Standard Specifications*.

Measurement and Payment

Where the material has been obtained from an authorized stockpile or from a borrow source and *Borrow Excavation* is not included in the contract, no direct payment will be made for this work, as the cost of this work will be part of the work being paid at the contract lump sum price for *Grading*. If *Borrow Excavation* is included in this contract and the material has been obtained from an authorized stockpile or from a borrow source, measurement and payment will be as provided in Section 230 of the *2012 Standard Specifications* for *Borrow Excavation*.

EMBANKMENT SETTLEMENT GAUGES:

(7-1-95) (Rev. 2-19-13) 235 SP2 R75(Rev)

Revise the *2012 Standard Specifications* as follows:

Page 2-22, Article 235-1 DESCRIPTION, add the following:

Surcharges and waiting periods may be required for embankments and retaining walls to minimize and control the effects of settlement on structures, approach slabs, pavements, pipes, utilities, etc. Settlement gauges may be required to monitor settlement at approximate locations shown in the plans and as directed.

Page 2-22, Article 235-2 MATERIALS, add the following:

Provide Schedule 40 black steel pipes and couplers with steel or wood bases for settlement gauges. Use steel plates with yield strength of at least 36 ksi and pressure treated wood boards for bases of settlement gauges.

Page 2-24, Article 235-3 CONSTRUCTION METHODS, add the following:

(E) Surcharges and Waiting Periods

Place surcharges at locations shown in the plans. Unless required otherwise in the contract, surcharge embankments after embankments are constructed to the grade and cross section shown in the plans. Construct surcharges with side slopes as directed, 2:1 (H:V) end slopes outside of surcharge limits and surcharge heights shown in the plans. Place and compact surcharge material in accordance with Subarticles 235-3(B) and 235-3(C). Construct and maintain adequate drainage of surface runoff to prevent erosion of surcharge material.

Waiting period durations are in accordance with the contract and as directed. Surcharge waiting periods apply to surcharge locations shown in the plans and begin after surcharges are constructed to the height shown in the plans.

Unless required otherwise in the contract, bridge waiting periods are required in accordance with the following:

(1) Apply to bridge embankments and retaining walls within 100 ft of end bent and bent locations shown in the plans and

(2) Begin after bridge embankments and retaining walls are constructed to the elevations noted in the plans.

Unless required otherwise in the contract, embankment waiting periods are required in accordance with the following:

(1) Apply to embankment locations shown in the plans and retaining walls for embankments with waiting periods and

(2) Begin after embankments and retaining walls are constructed to the elevations, grade and cross section shown in the plans.

Except for maintaining embankments, do not perform any work on embankments or structures with waiting periods until waiting periods end unless otherwise approved. Place and compact additional material in accordance with Subarticles 235-3(B) and 235-3(C) to maintain embankment grade elevations during waiting periods. Remove surcharges to the grade and cross section shown in the plans after surcharge waiting periods end.

(F) Embankment Monitoring

Fabricate and install settlement gauges in accordance with the contract. Make settlement gauges highly visible so gauges are not disturbed while monitoring settlement. Use only hand operated compaction equipment to compact fill material around gauges.

Do not damage settlement gauges. Damaged settlement gauges may require replacement or additional gauges and waiting period extensions as determined by the Engineer.

Page 2-24, Article 235-5 MEASUREMENT AND PAYMENT, add the following:

Borrow Excavation for surcharge material and additional material for maintaining embankment grade elevations will be measured and paid in accordance with Article 230-5. *Unclassified Excavation* for surcharge material, additional material for maintaining embankment grade elevations and removing surcharges will be measured and paid in accordance with Article 225-7. When there is no pay item for *Borrow Excavation* or *Unclassified Excavation* in the contract, surcharge and additional material and removing surcharges will be included in the lump sum payment for *Grading*.

Embankment Settlement Gauges will be measured and paid in units of each. Settlement gauges will be measured as one per gauge location. The contract unit price for *Embankment Settlement Gauges* will be full compensation for fabricating and installing settlement gauges including placing and compacting fill material around gauges, adding pipes and couplers until embankment monitoring ends and any incidentals necessary to monitor settlement. No payment will be made for interfering with the Contractor's operations due to embankment monitoring or damaged settlement gauges as determined by the Engineer.

Payment will be made under:

Pay Item	Pay Unit
Embankment Settlement Gauges	Each

PIPE INSTALLATION:

(11-20-12) 300 SP3 R01

Revise the *2012 Standard Specifications* as follows:

Page 3-1, Article 300-2, Materials, line 23-24, replace sentence with:

Provide foundation conditioning geotextile in accordance with Section 1056 for Type 4 geotextile.

FLOWABLE FILL:

(9-17-02) (Rev 1-17-12) 300, 340, 450, 1000, 1530, 1540, 1550 SP3 R30

Description

This work consists of all work necessary to place flowable fill in accordance with these provisions, the plans, and as directed.

Materials

Refer to Division 10 of the *2012 Standard Specifications*.

Item	Section
Flowable Fill	1000-6

Construction Methods

Discharge flowable fill material directly from the truck into the space to be filled, or by other approved methods. The mix may be placed full depth or in lifts as site conditions dictate. The Contractor shall provide a method to plug the ends of the existing pipe in order to contain the flowable fill.

Measurement and Payment

At locations where flowable fill is called for on the plans and a pay item for flowable fill is included in the contract, *Flowable Fill* will be measured in cubic yards and paid as the actual number of cubic yards that have been satisfactorily placed and accepted. Such price and payment will be full compensation for all work covered by this provision including, but not limited to, the mix design, furnishing, hauling, placing and containing the flowable fill.

Payment will be made under:

Pay Item	Pay Unit
Flowable Fill	Cubic Yard

ASPHALT PAVEMENTS - SUPERPAVE:

(6-19-12) (Rev. 10-15-13) 605, 609, 610, 650 SP6 R01

Revise the *2012 Standard Specifications* as follows:

Page 6-3, Article 605-7 APPLICATION RATES AND TEMPERATURES, replace this article, including Table 601-1, with the following:

Apply tack coat uniformly across the existing surface at target application rates shown in Table 605-1.

TABLE 605-1
APPLICATION RATES FOR TACK COAT

Existing Surface	Target Rate (gal/sy)
	Emulsified Asphalt
New Asphalt	0.04 ± 0.01
Oxidized or Milled Asphalt	0.06 ± 0.01
Concrete	0.08 ± 0.01

Apply tack coat at a temperature within the ranges shown in Table 605-2. Tack coat shall not be overheated during storage, transport or at application.

TABLE 605-2
APPLICATION TEMPERATURE FOR TACK COAT

Asphalt Material	Temperature Range
Asphalt Binder, Grade PG 64-22	350 - 400°F
Emulsified Asphalt, Grade RS-1H	130 - 160°F
Emulsified Asphalt, Grade CRS-1	130 - 160°F
Emulsified Asphalt, Grade CRS-1H	130 - 160°F
Emulsified Asphalt, Grade HFMS-1	130 - 160°F
Emulsified Asphalt, Grade CRS-2	130 - 160°F

Page 6-7, Article 609-3 FIELD VERIFICATION OF MIXTURE AND JOB MIX FORMULA ADJUSTMENTS, lines 35-37, delete the second sentence of the second paragraph.

Page 6-18, Article 610-1 DESCRIPTION, lines 40-41, delete the last sentence of the last paragraph.

Page 6-19, Subarticle 610-3(A) Mix Design-General, line 5, add the following as the first paragraph:

Warm mix asphalt (WMA) is allowed for use at the Contractor's option in accordance with the NCDOT Approved Products List for WMA Technologies available at:

https://connect.ncdot.gov/resources/Materials/MaterialsResources/WMA%20Approved%20Lists.pdf

Page 6-21, Subarticle 610-3(C) Job Mix Formula (JMF), replace Table 610-1 with the following:

TABLE 610-1
DESIGN MIXING TEMPERATURE AT THE ASPHALT PLANT[A]

Binder Grade	HMA JMF Temperature	WMA JMF Temperature Range
PG 64-22	300°F	225 - 275°F
PG 70-22	315°F	240 - 290°F
PG 76-22	335°F	260 - 310°F

A. The mix temperature, when checked in the truck at the roadway, shall be within plus 15° and minus 25° of the temperature specified on the JMF.

Page 6-21, Subarticle 610-3(C) Job Mix Formula (JMF), lines 4-6, delete first sentence of the second paragraph. Line 7, in the second sentence of the second paragraph, replace "275°F" with "275°F or greater."

Page 6-22, Article 610-4 WEATHER, TEMPERATURE AND SEASONAL LIMITATIONS FOR PRODUCING AND PLACING ASPHALT MIXTURES, lines 15-17, replace the second sentence of the first paragraph with the following:

Do not place asphalt material when the air or surface temperatures, measured at the location of the paving operation away from artificial heat, do not meet Table 610-5.

Page 6-23, Article 610-4 WEATHER, TEMPERATURE AND SEASONAL LIMITATIONS FOR PRODUCING AND PLACING ASPHALT MIXTURES, replace Table 610-5 with the following:

TABLE 610-5
PLACEMENT TEMPERATURES FOR ASPHALT

Asphalt Concrete Mix Type	Minimum Surface and Air Temperature
B25.0B, C	35°F
I19.0B, C, D	35°F
SF9.5A, S9.5B	40°F
S9.5C, S12.5C	45°F
S9.5D, S12.5D	50°F

Page 6-26, Article 610-7 HAULING OF ASPHALT MIXTURE, lines 22-23, in the fourth sentence of the first paragraph replace "so as to overlap the top of the truck bed and" with "to".

Page 6-41, Subrticle 650-3(B) Mix Design Criteria, replace Table 650-1 with the following:

TABLE 650-1 OGAFC GRADATION CRITERIA			
Grading Requirements	**Total Percent Passing**		
Sieve Size (mm)	*Type FC-1*	*Type FC-1 Modified*	*Type FC-2 Modified*
19.0	-	-	100
12.5	100	100	**80** - 100
9.50	75 - 100	75 - 100	55 - **80**
4.75	25 - 45	25 - 45	15 - **30**
2.36	5 - 15	5 - 15	5 - **15**
0.075	1.0 - 3.0	1.0 - 3.0	2.0 - 4.0

ASPHALT BINDER CONTENT OF ASPHALT PLANT MIXES:
(11-21-00) (Rev. 7-17-12) 609 SP6 R15

The approximate asphalt binder content of the asphalt concrete plant mixtures used on this project will be as follows:

Asphalt Concrete Base Course	Type B 25.0__	4.4%
Asphalt Concrete Intermediate Course	Type I 19.0__	4.8%
Asphalt Concrete Surface Course	Type S 4.75A	6.8%
Asphalt Concrete Surface Course	Type SA-1	6.8%
Asphalt Concrete Surface Course	Type SF 9.5A	6.7%
Asphalt Concrete Surface Course	Type S 9.5__	6.0%
Asphalt Concrete Surface Course	Type S 12.5__	5.6%

The actual asphalt binder content will be established during construction by the Engineer within the limits established in the *2012 Standard Specifications.*

ASPHALT PLANT MIXTURES:
(7-1-95) 609 SP6 R20

Place asphalt concrete base course material in trench sections with asphalt pavement spreaders made for the purpose or with other equipment approved by the Engineer.

PRICE ADJUSTMENT - ASPHALT BINDER FOR PLANT MIX:
(11-21-00) 620 SP6 R25

Price adjustments for asphalt binder for plant mix will be made in accordance with Section 620 of the *2012 Standard Specifications.*

The base price index for asphalt binder for plant mix is **$ 573.13.** per ton.

This base price index represents an average of F.O.B. selling prices of asphalt binder at supplier's terminals on **September 1, 2013**.

FINAL SURFACE TESTING NOT REQUIRED:
(5-18-04) (Rev. 5-15-12) 610 SP6 R45

Final surface testing is not required on this project.

MODIFIED CONCRETE FLUME WITH CONCRETE OUTLET:
(3-19-96)(Rev. 6-17-08) 825 SP8 R10

At locations shown in the plans, construct concrete flumes, concrete curb, and apron in accordance with the details in the plans. Use materials meeting the requirements of Section 825 of the *2012 Standard Specifications* except that the concrete must be Class B or of higher compressive strength.

Each concrete flume, concrete curb, and apron completed and accepted will be paid at the contract unit price per each for *Modified Concrete Flume*. Such price and payment will be full compensation for all materials, labor, equipment, tools, removing and disposing of the temporary slope drains, and any other incidentals necessary to complete the work satisfactorily.

The concrete curb and ditch outside the pay limits of the apron will be measured and paid in accordance with Section 846 and 850 of the *2012 Standard Specifications*.

Payment will be made under:

Pay Item	**Pay Unit**
Modified Concrete Flume	Each

CONVERT EXISTING CATCH BASIN TO TRAFFIC BEARING JUNCTION BOX WITH MANHOLE:
(1-1-02) (Rev. 7-18-06) 840, 859 SP8 R50

At the proper phase of construction, convert the existing **Catch Basin** at locations indicated in the plans or where directed, to **Traffic Bearing Junction Box with Manhole** in accordance with the details in the plans and the applicable requirements of Sections 840 and 859 of the *2012 Standard Specifications*.

Convert Existing Catch Basin to Traffic Bearing Junction Box with Manhole will be measured and paid as each, completed and accepted. Such price and payment is considered full compensation for all equipment, materials, labor, tools, and incidentals necessary to complete each conversion satisfactorily.

Payment will be made under:

Pay Item	**Pay Unit**
Convert Existing Catch Basin to Traffic Bearing Junction Box with Manhole	Each

GUARDRAIL ANCHOR UNITS, TYPE 350:

(4-20-04) (Rev. 8-16-11) 862 SP8 R65

Description

Furnish and install guardrail anchor units in accordance with the details in the plans, the applicable requirements of Section 862 of the *2012 Standard Specifications*, and at locations shown in the plans.

Materials

The Contractor may at his option, furnish any one of the guardrail anchor units or approved equal.

Guardrail anchor unit (ET-Plus) as manufactured by:

Trinity Industries, Inc.
2525 N. Stemmons Freeway
Dallas, Texas 75207
Telephone: 800-644-7976

The guardrail anchor unit (SKT 350) as manufactured by:

Road Systems, Inc.
3616 Old Howard County Airport
Big Spring, Texas 79720
Telephone: 915-263-2435

Prior to installation the Contractor shall submit to the Engineer:

(A) FHWA acceptance letter for each guardrail anchor unit certifying it meets the requirements of NCHRP Report 350, Test Level 3, in accordance with Article 106-2 of the *2012 Standard Specifications*.

(B) Certified working drawings and assembling instructions from the manufacturer for each guardrail anchor unit in accordance with Article 105-2 of the *2012 Standard Specifications*.

No modifications shall be made to the guardrail anchor unit without the express written permission from the manufacturer. Perform installation in accordance with the details in the plans, and details and assembling instructions furnished by the manufacturer.

Construction Methods

Guardrail end delineation is required on all approach and trailing end sections for both temporary and permanent installations. Guardrail end delineation consists of yellow reflective sheeting applied to the entire end section of the guardrail in accordance with Article 1088-3 of the *2012 Standard Specifications* and is incidental to the cost of the guardrail anchor unit.

Measurement and Payment

Measurement and payment will be made in accordance with Article 862-6 of the *2012 Standard Specifications*.

Payment will be made under:

Pay Item	Pay Unit
Guardrail Anchor Units, Type 350	Each

PRECAST CONCRETE PARKING BUMPER:

At locations shown in the plans or as directed by the Engineer, the Contractor will be required to install concrete parking bumpers.

The parking bumpers shall be made of precast concrete units specifically manufactured for the intended use. The bumper shall be 6' long by 6" high and 8" wide with cut in place holes for steel pins. Pins shall be 18" long and shall be recommended by the parking bumper manufacturer.

The quantity of parking bumpers to be paid for will be the actual number of parking bumpers installed, which have been completed and accepted.

The quantity of parking bumpers, measured as provided above, will be paid for at the contract unit price per each for "PRECAST CONCRETE PARKING BUMPER". Such price and payment will be full compensation for all work covered by this provision including but not limited to labor, materials, equipment, and incidentals necessary to satisfactorily complete the work.

Payment will be made under:	PayUnit
Precast Concrete Parking Bumper	Each

SPECIAL MONOLITHIC CONCRETE ISLAND:

Description

Construct special monolithic concrete islands in accordance with Section 852 of the *Standard Specifications,* the detail in the plans, this provision and as directed by the Engineer.

Materials

Refer to Article 852-2 of the *Standard Specifications*.

Construction Methods

Construct special monolithic concrete islands in accordance with Section 852 of the *2012 Standard Specifications* and the detail in the plans. For tubular markers refer to Section 1266 of the *Standard Specifications.*

Measurement and Payment

Special Monolithic Concrete Island will be measured and paid in square yards of concrete island that has been placed and accepted. Measurement will be made parallel to the bottom surface of the island or median. This work includes, but is not limited to, excavation and backfilling, constructing base, furnishing and placing concrete, and constructing and sealing joints.

Tubular Markers (Fixed) will be measured and paid for in accordance with Article 1266-5 of the *Standard Specifications.*

Payment will be made under:

Pay Item	Pay Unit
Special Monolithic Concrete Island	Square Yard

DETECTABLE WARNINGS FOR PROPOSED CURB RAMPS:

(6-15-10) (Rev. 8-16-11) 848 SP8 R126

Description

Construct detectable warnings consisting of integrated raised truncated domes on proposed concrete curb ramps in accordance with the *2012 Standard Specifications,* plan details, the requirements of the *28 CFR Part 36 ADA Standards for Accessible Design* and this provision.

Materials

Detectable warning for proposed curb ramps shall consist of integrated raised truncated domes. The description, size and spacing shall conform to Section 848 of the *2012 Standard Specifications.*

Use material for detectable warning systems as shown herein. Material and coating specifications must be stated in the Manufacturers Type 3 Certification and all Detectable Warning systems must be on the NCDOT Approved Products List.

Install detectable warnings created from one of the following materials: precast concrete blocks or bricks, clay paving brick, gray or ductile iron castings, mild steel, stainless steel, and engineered plastics, rubber or composite tile. Only one material type for detectable warning will be permitted per project, unless otherwise approved by the Engineer.

(A) Detectable Warnings shall consist of a base with integrated raised truncated domes, and when constructed of precast concrete they shall conform to the material requirements of Article 848-2 of the *2012 Standard Specifications.*

(B) Detectable Warnings shall consist of a base with integrated raised truncated domes, and may be comprised of other materials including, but not limited, to clay paving brick, gray

iron or ductile iron castings, mild steel, stainless steel, and engineered plastics, rubber or composite tile, which are cast into the concrete of the curb ramps. The material shall have an integral color throughout the thickness of the material. The detectable warning shall include fasteners or anchors for attachment in the concrete and shall be furnished as a system from the manufacturer.

Prior to installation, the Contractor shall submit to the Engineer assembling instructions from the manufacturer for each type of system used in accordance with Article 105-2 of the *2012 Standard Specifications*. The system shall be furnished as a kit containing all consumable materials and consumable tools, required for the application. They shall be capable of being affixed to or anchored in the concrete curb ramp, including green concrete (concrete that has set but not appreciably hardened). The system shall be solvent free and contain no volatile organic compounds (VOC). The static coefficient of friction shall be 0.8 or greater when measured on top of the truncated domes and when measured between the domes in accordance with ASTM C1028 (dry and wet). The system shall be resistant to deterioration due to exposure to sunlight, water, salt or adverse weather conditions and impervious to degradation by motor fuels, lubricants and antifreeze.

(C) When steel or gray iron or ductile iron casting products are provided, only products that meet the requirements of Subarticle 106-1(B) of the *2012 Standard Specifications* may be used. Submit to the Engineer a Type 6 Certification, catalog cuts and installation procedures at least 30 days prior to installation for all.

Construction Methods

(A) Prior to placing detectable warnings in proposed concrete curb ramps, adjust the existing subgrade to the proper grade and in accordance with Article 848-3 of the *2012 Standard Specifications*.

(B) Install all detectable warning in proposed concrete curb ramps in accordance with the manufacturer's recommendations.

Measurement and Payment

Detectable Warnings installed for construction of proposed curb ramps will not be paid for separately. Such payment will be included in the price bid for *Concrete Curb Ramps*.

CONCRETE FLUME:

At locations shown in the plans, construct concrete flumes and concrete curb in accordance with the details in the plans. Use materials meeting the requirements of Section 825 of the *2012 Standard Specifications* except that the concrete must be Class B or of higher compressive strength.

Each concrete flume and concrete curb completed and accepted will be paid at the contract unit price per each for *Concrete Flume*. Such price and payment will be full compensation for all materials, labor, equipment, tools, removing and disposing of the temporary slope drains, and any other incidentals necessary to complete the work satisfactorily.

The concrete curb and ditch outside the pay limits of the flume will be measured and paid in accordance with Section 846 and 850 of the *2012 Standard Specifications*.

Payment will be made under:

Pay Item	Pay Unit
Concrete Flume	Each

FOUNDATIONS AND ANCHOR ROD ASSEMBLIES FOR METAL POLES:

(1-17-12) (Rev. 5-21-13) 9, 14, 17 SP9 R05

Description

Foundations for metal poles include foundations for signals, cameras, overhead and dynamic message signs (DMS) and high mount and low level light standards supported by metal poles or upright trusses. Foundations consist of footings with pedestals and drilled piers with or without grade beams or wings. Anchor rod assemblies consist of anchor rods (also called anchor bolts) with nuts and washers on the exposed ends of rods and nuts and a plate or washers on the other ends of rods embedded in the foundation.

Construct concrete foundations with the required resistances and dimensions and install anchor rod assemblies in accordance with the contract and accepted submittals. Construct drilled piers consisting of cast-in-place reinforced concrete cylindrical sections in excavated holes. Provide temporary casings or polymer slurry as needed to stabilize drilled pier excavations. Use a prequalified Drilled Pier Contractor to construct drilled piers for metal poles. Define "excavation" and "hole" as a drilled pier excavation and "pier" as a drilled pier.

This provision does not apply to materials and anchor rod assemblies for standard foundations for low level light standards. See Section 1405 of the *2012 Standard Specifications* and Standard Drawing No. 1405.01 of the *2012 Roadway Standard Drawings* for materials and anchor rod assemblies for standard foundations. For construction of standard foundations for low level light standards, standard foundations are considered footings in this provision.

This provision does not apply to foundations for signal pedestals; see Section 1743 of the *2012 Standard Specifications* and Standard Drawing No. 1743.01 of the *2012 Roadway Standard Drawings*.

Materials

Refer to the *2012 Standard Specifications*.

Item	Section
Conduit	1091-3
Grout, Nonshrink	1003
Polymer Slurry	411-2(B)
Portland Cement Concrete	1000
Reinforcing Steel	1070
Rollers and Chairs	411-2(C)
Temporary Casings	411-2(A)

Provide Type 3 material certifications in accordance with Article 106-3 of the *2012 Standard Specifications* for conduit, rollers, chairs and anchor rod assemblies. Store steel materials on blocking at least 12" above the ground and protect it at all times from damage; and when placing in the work make sure it is free from dirt, dust, loose mill scale, loose rust, paint, oil or other foreign materials. Load, transport, unload and store foundation and anchor rod assembly materials so materials are kept clean and free of damage. Bent, damaged or defective materials will be rejected.

Use conduit type in accordance with the contract. Use Class A concrete for footings and pedestals, Class Drilled Pier concrete for drilled piers and Class AA concrete for grade beams and wings including portions of drilled piers above bottom of wings elevations. Corrugated temporary casings may be accepted at the discretion of the Engineer. A list of approved polymer slurry products is available from:
connect.ncdot.gov/resources/Geological/Pages/Products.aspx

Provide anchor rod assemblies in accordance with the contract consisting of the following:

(A) Straight anchor rods,

(B) Heavy hex top and leveling nuts and flat washers on exposed ends of rods, and

(C) Nuts and either flat plates or washers on the other ends of anchor rods embedded in foundations.

Do not use lock washers. Use steel anchor rods, nuts and washers that meet ASTM F1554 for Grade 55 rods and Grade A nuts. Use steel plates and washers embedded in concrete with a thickness of at least 1/4". Galvanize anchor rods and exposed nuts and washers in accordance with Article 1076-4 of the *2012 Standard Specifications*. It is not necessary to galvanize nuts, plates and washers embedded in concrete.

Construction Methods

Install the required size and number of conduits in foundations in accordance with the plans and accepted submittals. Construct top of piers, footings, pedestals, grade beams and wings flat, level and within 1" of elevations shown in the plans or approved by the Engineer. Provide an Ordinary Surface finish in accordance with Subarticle 825-6(B) of the *2012 Standard Specifications* for portions of foundations exposed above finished grade. Do not remove anchor bolt templates or pedestal or grade beam forms or erect metal poles or upright trusses onto foundations until concrete attains a compressive strength of at least 3,000 psi.

(A) Drilled Piers

Before starting drilled pier construction, hold a predrill meeting to discuss the installation, monitoring and inspection of the drilled piers. Schedule this meeting after the Drilled Pier Contractor has mobilized to the site. The Resident or Division Traffic

Engineer, Contractor and Drilled Pier Contractor Superintendent will attend this predrill meeting.

Do not excavate holes, install piles or allow equipment wheel loads or vibrations within 20 ft of completed piers until 16 hours after Drilled Pier concrete reaches initial set.

Check for correct drilled pier alignment and location before beginning drilling. Check plumbness of holes frequently during drilling.

Construct drilled piers with the minimum required diameters shown in the plans. Install piers with tip elevations no higher than shown in the plans or approved by the Engineer.

Excavate holes with equipment of the sizes required to construct drilled piers. Depending on the subsurface conditions encountered, drilling through rock and boulders may be required. Do not use blasting for drilled pier excavations.

Contain and dispose of drilling spoils and waste concrete as directed and in accordance with Section 802 of the *2012 Standard Specifications*. Drilling spoils consist of all materials and fluids removed from excavations.

If unstable, caving or sloughing materials are anticipated or encountered, stabilize holes with temporary casings and/or polymer slurry. Do not use telescoping temporary casings. If it becomes necessary to replace a temporary casing during drilling, backfill the excavation, insert a larger casing around the casing to be replaced or stabilize the excavation with polymer slurry before removing the temporary casing.

If temporary casings become stuck or the Contractor proposes leaving casings in place, temporary casings should be installed against undisturbed material. Unless otherwise approved, do not leave temporary casings in place for mast arm poles and cantilever signs. The Engineer will determine if casings may remain in place. If the Contractor proposes leaving temporary casings in place, do not begin drilling until a casing installation method is approved.

Use polymer slurry and additives to stabilize holes in accordance with the slurry manufacturer's recommendations. Provide mixing water and equipment suitable for polymer slurry. Maintain polymer slurry at all times so slurry meets Table 411-3 of the *2012 Standard Specifications* except for sand content.

Define a "sample set" as slurry samples collected from mid-height and within 2 ft of the bottom of holes. Take sample sets from excavations to test polymer slurry immediately after filling holes with slurry, at least every 4 hours thereafter and immediately before placing concrete. Do not place Drilled Pier concrete until both slurry samples from an excavation meet the required polymer slurry properties. If any slurry test results do not meet the requirements, the Engineer may suspend drilling until both samples from a sample set meet the required slurry properties.

Remove soft and loose material from bottom of holes using augers to the satisfaction of the Engineer. Assemble rebar cages and place cages and Drilled Pier concrete in accordance with Subarticle 411-4(E) of the *2012 Standard Specifications* except for the following:

(1) Inspections for tip resistance and bottom cleanliness are not required,
(2) Temporary casings may remain in place if approved, and
(3) Concrete placement may be paused near the top of pier elevations for anchor rod assembly installation and conduit placement or
(4) If applicable, concrete placement may be stopped at bottom of grade beam or wings elevations for grade beam or wing construction.

If wet placement of concrete is anticipated or encountered, do not place Drilled Pier concrete until a concrete placement procedure is approved. If applicable, temporary casings and fluids may be removed when concrete placement is paused or stopped in accordance with the exceptions above provided holes are stable. Remove contaminated concrete from exposed Drilled Pier concrete after removing casings and fluids. If holes are unstable, do not remove temporary casings until a procedure for placing anchor rod assemblies and conduit or constructing grade beams or wings is approved.

Use collars to extend drilled piers above finished grade. Remove collars after Drilled Pier concrete sets and round top edges of piers.

If drilled piers are questionable, pile integrity testing (PIT) and further investigation may be required in accordance with Article 411-5 of the *2012 Standard Specifications*. A drilled pier will be considered defective in accordance with Subarticle 411-5(D) of the *2012 Standard Specifications* and drilled pier acceptance is based in part on the criteria in Article 411-6 of the *2012 Standard Specifications* except for the top of pier tolerances in Subarticle 411-6(C) of the *2012 Standard Specifications*.

If a drilled pier is under further investigation, do not grout core holes, backfill around the pier or perform any work on the drilled pier until the Engineer accepts the pier. If the drilled pier is accepted, dewater and grout core holes and backfill around the pier with approved material to finished grade. If the Engineer determines a pier is unacceptable, remediation is required in accordance with Article 411-6 of the *2012 Standard Specifications*. No extension of completion date or time will be allowed for remediation of unacceptable drilled piers or post repair testing.

Permanently embed a plate in or mark top of piers with the pier diameter and depth, size and number of vertical reinforcing bars and the minimum compressive strength of the concrete mix at 28 days.

(B) Footings, Pedestals, Grade Beams and Wings

Excavate as necessary for footings, grade beams and wings in accordance with the plans, accepted submittals and Section 410 of the *2012 Standard Specifications*. If unstable, caving or sloughing materials are anticipated or encountered, shore foundation excavations as needed with an approved method. Notify the Engineer when foundation excavation is complete. Do not place concrete or reinforcing steel until excavation dimensions and foundation material are approved.

Construct cast-in-place reinforced concrete footings, pedestals, grade beams and wings with the dimensions shown in the plans and in accordance with Section 825 of the *2012 Standard Specifications*. Use forms to construct portions of pedestals and grade beams protruding above finished grade. Provide a chamfer with a 3/4" horizontal width for pedestal and grade beam edges exposed above finished grade. Backfill and fill in accordance with Article 410-8 of the *2012 Standard Specifications*. Proper compaction around footings and wings is critical for foundations to resist uplift and torsion forces. Place concrete against undisturbed soil and do not use forms for standard foundations for low level light standards.

(C) Anchor Rod Assemblies

Size anchor rods for design and the required projection above top of foundations. Determine required anchor rod projections from nut, washer and base plate thicknesses, the protrusion of 3 to 5 anchor rod threads above top nuts after tightening and the distance of one nut thickness between top of foundations and bottom of leveling nuts.

Protect anchor rod threads from damage during storage and installation of anchor rod assemblies. Before placing anchor rods in foundations, turn nuts onto and off rods past leveling nut locations. Turn nuts with the effort of one workman using an ordinary wrench without a cheater bar. Report any thread damage to the Engineer that requires extra effort to turn nuts.

Arrange anchor rods symmetrically about center of base plate locations as shown in the plans. Set anchor rod elevations based on required projections above top of foundations. Securely brace and hold rods in the correct position, orientation and alignment with a steel template. Do not weld to reinforcing steel, temporary casings or anchor rods.

Install top and leveling (bottom) nuts, washers and the base plate for each anchor rod assembly in accordance with the following procedure:

(1) Turn leveling nuts onto anchor rods to a distance of one nut thickness between the top of foundation and bottom of leveling nuts. Place washers over anchor rods on top of leveling nuts.

(2) Determine if nuts are level using a flat rigid template on top of washers. If necessary, lower leveling nuts to level the template in all directions or if applicable, lower nuts to tilt the template so the metal pole or upright truss will lean as shown in the plans. If leveling nuts and washers are not in full contact with the template, replace washers with galvanized beveled washers.

(3) Verify the distance between the foundation and leveling nuts is no more than one nut thickness.

(4) Place base plate with metal pole or upright truss over anchor rods on top of washers. High mount luminaires may be attached before erecting metal poles but do not attach cables, mast arms or trusses to metal poles or upright trusses at this time.

(5) Place washers over anchor rods on top of base plate. Lubricate top nut bearing surfaces and exposed anchor rod threads above washers with beeswax, paraffin or other approved lubricant.

(6) Turn top nuts onto anchor rods. If nuts are not in full contact with washers or washers are not in full contact with the base plate, replace washers with galvanized beveled washers.

(7) Tighten top nuts to snug-tight with the full effort of one workman using a 12" wrench. Do not tighten any nut all at once. Turn top nuts in increments. Follow a star pattern cycling through each nut at least twice.

(8) Repeat (7) for leveling nuts.

(9) Replace washers above and below the base plate with galvanized beveled washers if the slope of any base plate face exceeds 1:20 (5%), any washer is not in firm contact with the base plate or any nut is not in firm contact with a washer. If any washers are replaced, repeat (7) and (8).

(10) With top and leveling nuts snug-tight, mark each top nut on a corner at the intersection of 2 flats and a corresponding reference mark on the base plate. Mark top nuts and base plate with ink or paint that is not water-soluble. Use the turn-of-nut method for pretensioning. Do not pretension any nut all at once. Turn top nuts in increments for a total turn that meets the following nut rotation requirements:

NUT ROTATION REQUIREMENTS (Turn-of-Nut Pretensioning Method)	
Anchor Rod Diameter, inch	**Requirement**
≤ 1 1/2	1/3 turn (2 flats)
> 1 1/2	1/6 turn (1 flat)

Follow a star pattern cycling through each top nut at least twice.

(11) Ensure nuts, washers and base plate are in firm contact with each other for each anchor rod. Cables, mast arms and trusses may now be attached to metal poles and upright trusses.

(12) Between 4 and 14 days after pretensioning top nuts, use a torque wrench calibrated within the last 12 months to check nuts in the presence of the Engineer. Completely erect mast arm poles and cantilever signs and attach any hardware before checking top nuts for these structures. Check that top nuts meet the following torque requirements:

TORQUE REQUIREMENTS	
Anchor Rod Diameter, inch	**Requirement, ft-lb**
7/8	180
1	270
1 1/8	380
1 1/4	420
≥ 1 1/2	600

If necessary, retighten top nuts in the presence of the Engineer with a calibrated torque wrench to within ± 10 ft-lb of the required torque. Do not overtighten top nuts.

(13) Do not grout under base plate.

Measurement and Payment

Foundations and anchor rod assemblies for metal poles and upright trusses will be measured and paid for elsewhere in the contract.

No payment will be made for temporary casings that remain in drilled pier excavations. No payment will be made for PIT. No payment will be made for further investigation of defective piers. Further investigation of piers that are not defective will be paid as extra work in accordance with Article 104-7 of the *2012 Standard Specifications*. No payment will be made for remediation of unacceptable drilled piers or post repair testing.

MATERIALS:

(2-21-12) (Rev. 10-15-13) 1000, 1005, 1050, 1074, 1078, 1080, 1081, 1084, 1087, 1092 SP10 R01

Revise the *2012 Standard Specifications* as follows:

Page 10-1, Article 1000-1, DESCRIPTION, line 14, add the following:

Use materials which do not produce a mottled appearance through rusting or other staining of the finished concrete surface.

Page 10-5, Table 1000-1, REQUIREMENTS FOR CONCRETE, replace with the following:

TABLE 1000-1
REQUIREMENTS FOR CONCRETE

Class of Concrete	Min. Comp. Strength at 28 days	Maximum Water-Cement Ratio				Consistency Max. Slump		Cement Content			
		Air-Entrained Concrete		Non Air-Entrained Concrete		Vibrated	Non-Vibrated	Vibrated		Non- Vibrated	
		Rounded Aggregate	Angular Aggre-gate	Rounded Aggregate	Angular Aggre-gate			Min.	Max.	Min.	Max.
Units	*psi*					*inch*	*inch*	*lb/cy*	*lb/cy*	*lb/cy*	*lb/cy*
AA	4,500	0.381	0.426	-	-	3.5	-	639	715	-	-
AA Slip Form	4,500	0.381	0.426	-	-	1.5	-	639	715	-	-
Drilled Pier	4,500	-	-	0.450	0.450	-	5-7 dry 7-9 wet	-	-	640	800
A	3,000	0.488	0.532	0.550	0.594	3.5	4	564	-	602	-
B	2,500	0.488	0.567	0.559	0.630	2.5	4	508	-	545	-
B Slip Formed	2,500	0.488	0.567	-	-	1.5	-	508	-	-	-
Sand Light-weight	4,500	-	0.420	-	-	4	-	715	-	-	-
Latex Modified	3,000 7 day	0.400	0.400	-	-	6	-	658	-	-	-
Flowable Fill excavatable	150 max. at 56 days	as needed	as needed	as needed	as needed	-	Flow-able	-	-	40	100
Flowable Fill non-excavatable	125	as needed	as needed	as needed	as needed	-	Flow-able	-	-	100	as needed
Pavement	4,500 design, field 650 flexural, design only	0.559	0.559	-	-	1.5 slip form 3.0 hand place	-	526	-	-	-
Precast	See Table 1077-1	as needed	as needed	-	-	6	as needed	as needed	as needed	as needed	as needed
Prestress	per contract	See Table 1078-1	See Table 1078-1	-	-	8	-	564	as needed	-	-

Page 10-65, Article 1050-1, GENERAL, line 41, replace the first sentence with:

All fencing material and accessories shall meet Section 106.

Page 10-23, Table 1005-1, AGGREGATE GRADATION-COARSE AGGREGATE, replace with the following:

TABLE 1005-1
AGGREGATE GRADATION - COARSE AGGREGATE

Percentage of Total by Weight Passing

Std. Size #	2"	1 1/2"	1"	3/4"	1/2"	3/8"	#4	#8	#10	#16	#40	#200	Remarks
4	100	90-100	20-55	0-15	-	0-5	-	-	-	-	-	A	Asphalt Plant Mix
467M	100	95-100	-	35-70	-	0-30	0-5	-	-	-	-	A	Asphalt Plant Mix
5	-	100	90-100	20-55	0-10	0-5	-	-	-	-	-	A	AST, Sediment Control Stone
57	-	100	95-100	-	25-60	-	0-10	0-5	-	-	-	A	AST, Str. Concrete, Shoulder Drain, Sediment Control Stone
57M	-	100	95-100	-	25-45	-	0-10	0-5	-	-	-	A	AST, Concrete Pavement
6M	-	-	100	90-100	20-55	0-20	0-8	-	-	-	-	A	AST
67	-	-	100	90-100	-	20-55	0-10	0-5	-	-	-	A	AST, Str. Concrete, Asphalt Plant Mix
78M	-	-	-	100	98-100	75-100	20-45	0-15	-	-	-	A	Asphalt Plant Mix, AST, Str. Conc, Weep Hole Drains
14M	-	-	-	-	-	100	35-70	5-20	-	0-8	-	A	Asphalt Plant Mix, AST, Weep Hole Drains, Str. Concrete
9	-	-	-	-	-	100	85-100	10-40	-	0-10	-	A	AST
ABC	-	100	75-97	-	55-80	-	35-55	-	25-45	-	14-30	4-12[B]	Aggregate Base Course, Aggregate Stabilization
ABC (M)	-	100	75-100	-	45-79	-	20-40	-	0-25	-	-	0-12[B]	Maintenance Stabilization
Light-weight[C]	-	-	-	-	100	80-100	5-40	0-20	-	0-10	-	0-2.5	AST

A. See Subarticle 1005-4(A).
B. See Subarticle 1005-4(B).
C. For Lightweight Aggregate used in Structural Concrete, see Subarticle 1014-2(E)(6).

Page 10-115, Subarticle 1074-7(B), Gray Iron Castings, lines 10-11, replace with the first two sentences with the following:

Supply gray iron castings meeting all facets of AASHTO M 306 excluding proof load. Proof load testing will only be required for new casting designs during the design process, and

conformance to M306 loading (40,000 lbs.) will be required only when noted on the design documents.

Page 10-126, Table 1078-1, REQUIREMENTS FOR CONCRETE, replace with the following:

TABLE 1078-1 REQUIREMENTS FOR CONCRETE		
Property	**28 Day Design Compressive Strength 6,000 psi or less**	**28 Day Design Compressive Strength greater than 6,000 psi**
Maximum Water/Cementitious Material Ratio	0.45	0.40
Maximum Slump without HRWR	3.5"	3.5"
Maximum Slump with HRWR	8"	8"
Air Content (upon discharge into forms)	5 + 2%	5 + 2%

Page 10-151, Article 1080-4 Inspection and Sampling, lines 18-22, replace (B), (C) and (D) with the following:

(B) At least 3 panels prepared as specified in 5.5.10 of AASHTO M 300, Bullet Hole Immersion Test.

(C) At least 3 panels of 4"x6"x1/4" for the Elcometer Adhesion Pull Off Test, ASTM D4541.

(D) A certified test report from an approved independent testing laboratory for the Salt Fog Resistance Test, Cyclic Weathering Resistance Test, and Bullet Hole Immersion Test as specified in AASHTO M 300.

(E) A certified test report from an approved independent testing laboratory that the product has been tested for slip coefficient and meets AASHTO M253, Class B.

Page 10-162, Subarticle 1081-1(A) Classifications, lines 4-7, delete the second and third sentences of the description for Type 3A.

Page 10-162, Subarticle 1081-1(B) Requirements, lines 26-30, replace the second paragraph with the following:

For epoxy resin systems used for embedding dowel bars, threaded rods, rebar, anchor bolts and other fixtures in hardened concrete, the manufacturer shall submit test results showing that the bonding system will obtain 125% of the specified required yield strength of the fixture. Furnish certification that, for the particular bolt grade, diameter and embedment depth required, the anchor system will not fail by adhesive failure and that there is no movement of the anchor bolt. For certification and anchorage, use 3,000 psi as the minimum Portland cement concrete compressive strength used in this test. Use adhesives that meet Section 1081.

List the properties of the adhesive on the container and include density, minimum and maximum temperature application, setting time, shelf life, pot life, shear strength and compressive strength.

Page 10-169, Subarticle 1081-3(G) Anchor Bolt Adhesives, delete this subarticle.

Page 10-173, Article 1084-2 STEEL SHEET PILES, lines 37-38, replace first paragraph with the following:

Steel sheet piles detailed for permanent applications shall be hot rolled and meet ASTM A572 or ASTM A690 unless otherwise required by the plans. Steel sheet piles shall be coated as required by the plans. Galvanized sheet piles shall be coated in accordance with Section 1076. Metallized sheet piles shall be metallized in accordance to the Project Special Provision "Thermal Sprayed Coatings (Metallization)" with an 8 mil, 99.9% aluminum alloy coating and a 0.5 mil seal coating. Any portion of the metallized sheet piling encased in concrete shall receive a barrier coat. The barrier coat shall be an approved waterborne coating with a low-viscosity which readily absorbs into the pores of the aluminum thermal sprayed coating. The waterborne coating shall be applied at a spreading rate that results in a theoretical 1.5 mil dry film thickness. The manufacturer shall issue a letter of certification that the resin chemistry of the waterborne coating is compatible with the 99.9% aluminum thermal sprayed alloy and suitable for tidal water applications.

Page 10-179, Subarticle 1087-4(A) Composition, lines 39-41, replace the third paragraph with the following:

All intermixed and drop-on glass beads shall not contain more than 75 ppm arsenic or 200 ppm lead.

Page 10-180, Subarticle 1087-4(B) Physical Characteristics, line 8, replace the second paragraph with the following:

All intermixed and drop-on glass beads shall comply with NCGS § 136-30.2 and 23 USC § 109(r).

Page 10-181, Subarticle 1087-7(A) Intermixed and Drop-on Glass Beads, line 24, add the following after the first paragraph:

Use X-ray Fluorescence for the normal sampling procedure for intermixed and drop-on beads, without crushing, to check for any levels of arsenic and lead. If any arsenic or lead is detected, the sample shall be crushed and repeat the test using X-ray Fluorescence. If the X-ray Fluorescence test shows more than a LOD of 5 ppm, test the beads using United States Environmental Protection Agency Method 6010B, 6010C or 3052 for no more than 75 ppm arsenic or 200 ppm lead.

Page 10-204, Subarticle 1092-2(A) Performance and Test Requirements, replace **Table 1092-3 Minimum Coefficient of Retroreflection for NC Grade A** with the following:

TABLE 1092-3
MINIMUM COEFFICIENT OF RETROREFLECTION FOR NC GRADE A
(Candelas Per Lux Per Square Meter)

Observation Angle, degrees	Entrance Angle, degrees	White	Yellow	Green	Red	Blue	Fluorescent Yellow Green	Fluorescent Yellow
0.2	-4.0	525	395	52	95	30	420	315
0.2	30.0	215	162	22	43	10	170	130
0.5	-4.0	310	230	31	56	18	245	185
0.5	30.0	135	100	14	27	6	110	81
1.0	-4.0	**120**	60	8	16	3.6	64	48
1.0	30.0	45	34	4.5	9	2	36	27

#57 STONE:
7-18-06 SPI0 -1

Description

The Contractor shall place #57 stone in accordance with the details in the plans and the following provision.

Materials

Item	Section
# 57 Stone	1005

Construction Methods

The stone shall be placed and compacted as directed by the Engineer.

Measurement and Payment

#57 Stone will be measured and paid in tons that are completed and accepted. The stone will be measured by being weighed in trucks on certified platform scales or other certified weighing devices. The price and payment will be full compensation for furnishing, hauling, placing, and all incidentals necessary to complete the work.

Payment will be made under:

Pay Item	Pay Unit
#57 Stone	Ton

SELECT MATERIAL, CLASS III, TYPE 3:
(1-17-12) 1016, 1044 SP10 R05

Revise the *2012 Standard Specifications* as follows:

Page 10-39, Article 1016-3, CLASS III, add the following after line 14:

Type 3 Select Material

Type 3 select material is a natural or manufactured fine aggregate material meeting the following gradation requirements and as described in Sections 1005 and 1006:

Percentage of Total by Weight Passing							
3/8"	#4	#8	#16	#30	#50	#100	#200
100	95-100	65-100	35-95	15-75	5-35	0-25	0-8

Page 10-39, Article 1016-3, CLASS III, line 15, replace "either type" with "Type 1, Type 2 or Type 3".

Page 10-62, Article 1044-1, line 36, delete the sentence and replace with the following:

Subdrain fine aggregate shall meet Class III select material, Type 1 or Type 3.

Page 10-63, Article 1044-2, line 2, delete the sentence and replace with the following:

Subdrain coarse aggregate shall meet Class V select material.

SHOULDER AND SLOPE BORROW:
(3-19-13) 1019 SP10 R10

Use soil in accordance with Section 1019 of the *2012 Standard Specifications*. Use soil consisting of loose, friable, sandy material with a PI greater than 6 and less than 25 and a pH ranging from 5.5 to 7.0.

Soil with a pH ranging from 4.0 to 5.5 will be accepted without further testing if additional limestone is provided in accordance with the application rates shown in Table 1019-1A. Soil type is identified during the soil analysis. Soils with a pH above 7.0 require acidic amendments to be added. Submit proposed acidic amendments to the Engineer for review and approval. Soils with a pH below 4.0 or that do not meet the PI requirements shall not be used.

TABLE 1019-1A
ADDITIONAL LIMESTONE APPLICATION RATE TO RAISE pH

pH TEST RESULT	Sandy Soils Additional Rate (lbs. / Acre)	Silt Loam Soils Additional Rate (lbs. / Acre)	Clay Loam Soils Additional Rate (lbs. / Acre)
4.0 - 4.4	1,000	4,000	6,000
4.5 - 4.9	500	3,000	5,000
5.0 - 5.4	NA	2,000	4,000

Note: Limestone application rates shown in this table are in addition to the standard rate of 4000 lbs. / acre required for seeding and mulching.

No direct payment will be made for providing additional lime or acidic amendments for Ph adjustment.

TRUCK MOUNTED CHANGEABLE MESSAGE SIGNS:
(8-21-12) 1101.02 SP11 R10

Revise the *2012 Roadway Standard Drawings* as follows:

Drawing No. 1101.02, Sheet 12, TEMPORARY LANE CLOSURES, replace General Note #11 with the following:

11- TRUCK MOUNTED CHANGEABLE MESSAGE SIGNS (TMCMS) USED ON SHADOW VEHICLES FOR "IN LANE" ACTIVITIES SHALL BE A MINIMUM OF 43" X 73". THE DISPLAY PANEL SHALL HAVE FULL MATRIX CAPABILITY WITH THE CAPABILITY TO PROVIDE 2 MESSAGE LINES WITH 7 CHARACTERS PER LINE WITH A MINIMUM CHARACTER HEIGHT OF 18". FOR ADDITIONAL MESSAGING, CONTACT THE WORK ZONE TRAFFIC CONTROL SECTION.

12- TMCMS USED FOR ADVANCED WARNING ON VEHICLES LOCATED ON THE SHOULDER MAY BE SMALLER THAN 43" X 73". THE DISPLAY PANEL SHALL HAVE THE CAPABILITY TO PROVIDE 2 MESSAGE LINES WITH 7 CHARACTERS PER LINE WITH A MINIMUM CHARACTER HEIGHT OF 18". FOR ADDITIONAL MESSAGING, CONTACT THE WORK ZONE TRAFFIC CONTROL SECTION.

Drawing No. 1101.02, Sheet 13, TEMPORARY LANE CLOSURES, replace General Note #12 with the following:

12- TRUCK MOUNTED CHANGEABLE MESSAGE SIGNS (TMCMS) USED ON SHADOW VEHICLES FOR "IN LANE" ACTIVITIES SHALL BE A MINIMUM OF 43" X 73". THE DISPLAY PANEL SHALL HAVE FULL MATRIX CAPABILITY WITH THE CAPABILITY TO PROVIDE 2 MESSAGE LINES WITH 7 CHARACTERS PER LINE WITH A MINIMUM CHARACTER HEIGHT OF 18". FOR ADDITIONAL MESSAGING, CONTACT THE WORK ZONE TRAFFIC CONTROL SECTION.

13- TMCMS USED FOR ADVANCED WARNING ON VEHICLES LOCATED ON THE SHOULDER MAY BE SMALLER THAN 43" X 73". THE DISPLAY PANEL SHALL HAVE THE CAPABILITY TO PROVIDE 2 MESSAGE LINES WITH 7 CHARACTERS PER LINE WITH A MINIMUM CHARACTER HEIGHT OF 18". FOR ADDITIONAL MESSAGING, CONTACT THE WORK ZONE TRAFFIC CONTROL SECTION.

PERMANENT SEEDING AND MULCHING:
(7-1-95) 1660 SP16 R02

The Department desires that permanent seeding and mulching be established on this project as soon as practical after slopes or portions of slopes have been graded. As an incentive to obtain an early stand of vegetation on this project, the Contractor's attention is called to the following:

For all permanent seeding and mulching that is satisfactorily completed in accordance with the requirements of Section 1660 in the *2012 Standard Specifications* and within the following percentages of elapsed contract times, an additional payment will be made to the Contractor as an incentive additive. The incentive additive will be determined by multiplying the number of acres of seeding and mulching satisfactorily completed times the contract unit bid price per acre for Seeding and Mulching times the appropriate percentage additive.

Percentage of Elapsed Contract Time	Percentage Additive
0% - 30%	30%
30.01% - 50%	15%

Percentage of elapsed contract time is defined as the number of calendar days from the date of availability of the contract to the date the permanent seeding and mulching is acceptably completed divided by the total original contract time.

CONCRETE BARRIER RAIL WITH MOMENT SLAB (1-17-12)

1.0 GENERAL

Construct concrete barrier rail connected to moment slabs to resist traffic impact above retaining walls. Construct concrete barrier rail with moment slab in accordance with the contract and accepted submittals.

2.0 MATERIALS

Refer to Division 10 of the *Standard Specifications*.

Item	Section
Barrier Delineators	1088-2
Portland Cement Concrete	1000
Reinforcing Steel	1070

Use Class AA concrete for concrete barrier rail and Class A concrete for moment slabs. Provide epoxy coated reinforcing steel that meets Article 1070-7 of the *Standard Specifications* for concrete barrier rail.

3.0 CONSTRUCTION METHODS

Construct concrete barrier rail with moment slab in accordance with the plans and accepted submittals. Construct cast-in-place reinforced concrete moment slabs in accordance with Section 420 of the *Standard Specifications* and concrete barrier rail in accordance with Subarticle 460-3(C) of the *Standard Specifications*. Do not remove forms until concrete attains a compressive strength of at least 2,400 psi.

4.0 MEASUREMENT AND PAYMENT

Concrete Barrier Rail with Moment Slab will be measured and paid in linear feet. Concrete barrier rail with moment slab will be measured as the length of concrete barrier rail above retaining walls. The contract unit price for *Concrete Barrier Rail with Moment Slab* will be full compensation for submittals, labor, tools, equipment and concrete barrier rail with moment slab materials, excavating, backfilling, hauling and removing excavated materials and supplying any incidentals necessary to construct concrete barrier rail with moment slab.

Payment will be made under:

Pay Item	Pay Unit
Concrete Barrier Rail with Moment Slab	Linear Foot

NORTH CAROLINA PROFESSIONAL SEAL 15741 ENGINEER XAVIER C. BARRETT

MECHANICALLY STABILIZED EARTH RETAINING WALLS (7-17-12)

1.0 GENERAL

Construct mechanically stabilized earth (MSE) retaining walls consisting of steel or geogrid reinforcement in the reinforced zone connected to vertical facing elements. The facing elements may be precast concrete panels or segmental retaining wall (SRW) units unless required otherwise in the plans or the *NCDOT Policy for Mechanically Stabilized Earth Retaining Walls* prohibits the use of SRW units. At the Contractor's option, use coarse or fine aggregate in the reinforced zone of MSE retaining walls except do not use fine aggregate for walls subject to scour, walls that support or are adjacent to railroads or walls with design heights greater than 35 ft or internal acute corners less than 45°. Provide reinforced concrete coping as required. Design and construct MSE retaining walls based on actual elevations and wall dimensions in accordance with the contract and accepted submittals. Use a prequalified MSE Wall Installer to construct MSE retaining walls.

Define "MSE wall" as a mechanically stabilized earth retaining wall and "MSE Wall Vendor" as the vendor supplying the chosen MSE wall system. Define a "segmental retaining wall" as an MSE wall with SRW units and an "abutment wall" as an MSE wall with bridge foundations in the reinforced zone. Define "reinforcement" as steel or geogrid reinforcement and "aggregate" as coarse or fine aggregate. Define "panel" as a precast concrete panel and "coping" as precast or cast-in-place concrete coping.

Use an approved MSE wall system in accordance with the plans, NCDOT MSE wall policy and any NCDOT restrictions for the chosen system. Value engineering proposals for other MSE wall systems will not be considered. Do not use segmental retaining walls or MSE wall systems with an "approved for provisional use" status code for critical walls or MSE walls connected to critical walls. Critical walls are defined in the NCDOT MSE wall policy. The list of approved MSE wall systems and NCDOT MSE wall policy are available from:
www.ncdot.org/doh/preconstruct/highway/geotech/msewalls

2.0 MATERIALS

Refer to the *Standard Specifications*.

Item	Section
Aggregate	1014
Anchor Pins	1056-2
Curing Agents	1026
Geotextiles, Type 2	1056
Joint Materials	1028
Portland Cement Concrete, Class A	1000
Precast Retaining Wall Coping	1077
Reinforcing Steel	1070
Retaining Wall Panels	1077
Segmental Retaining Wall Units	1040-4
Shoulder Drain Materials	816-2

NORTH CAROLINA PROFESSIONAL SEAL 15741 ENGINEER XAVIER C. BARRETT 4/16/13

Wire Staples 1060-8(D)

Provide Type 2 geotextile for filtration and separation geotextiles. Use Class A concrete for cast-in-place coping, leveling concrete and pads.

Provide panels and SRW units produced by a manufacturer approved or licensed by the MSE Wall Vendor. Unless required otherwise in the contract, produce panels with a smooth flat final finish that meets Article 1077-11 of the *Standard Specifications*. Accurately locate and secure reinforcement connectors in panels and maintain required concrete cover. Produce panels within 1/4" of the panel dimensions shown in the accepted submittals.

Damaged panels or SRW units with excessive discoloration, chips or cracks as determined by the Engineer will be rejected. Do not damage reinforcement connection devices or mechanisms in handling or storing panels and SRW units.

Store steel materials on blocking at least 12" above the ground and protect it at all times from damage; and when placing in the work make sure it is free from dirt, dust, loose mill scale, loose rust, paint, oil or other foreign materials. Handle and store geogrids in accordance with Article 1056-2 of the *Standard Specifications*. Load, transport, unload and store MSE wall materials so materials are kept clean and free of damage.

A. Aggregate

Use standard size No. 57, 57M, 67 or 78M that meets Table 1005-1 of the *Standard Specifications* for coarse aggregate except do not use No. 57 or 57M stone in the reinforced zone of MSE walls with geogrid reinforcement. Use the following for fine aggregate:

1. Standard size No. 1S, 2S, 2MS or 4S that meets Table 1005-2 of the *Standard Specifications* or
2. Gradation that meets Class III, Type 3 select material in accordance with Article 1016-3 of the *Standard Specifications*.

Fine aggregate is exempt from mortar strength and siliceous particle content referenced in Subarticles 1014-1(E) and 1014-1(H) of the *Standard Specifications*. Provide fine aggregate that meets the following requirements:

FINE AGGREGATE REQUIREMENTS					
Reinforcement or Connector Material	**pH**	**Resistivity**	**Chlorides**	**Sulfates**	**Organics**
Steel	5-10	$\geq$ 3,000 $\Omega \cdot$ cm	$\leq$ 100 ppm	$\leq$ 200 ppm	$\leq$ 1%
Polyester Type (PET) Geogrid	5-8	N/A*	N/A*	N/A*	$\leq$ 1%
Polyolefin Geogrid	4.5-9	N/A*	N/A*	N/A*	$\leq$ 1%

* Resistivity, chlorides and sulfates are not applicable to geogrid.

Use fine aggregate from a source that meets the *Mechanically Stabilized Earth Wall Fine Aggregate Sampling and Testing Manual*. Perform organic content tests in accordance with AASHTO T 267 instead of Subarticle 1014-1(D) of the *Standard Specifications*. Perform electrochemical tests in accordance with the following test procedures:

Property	**Test Method**
pH	AASHTO T 289
Resistivity	AASHTO T 288
Chlorides	AASHTO T 291
Sulfates	AASHTO T 290

B. Reinforcement

Provide steel or geogrid reinforcement supplied by the MSE Wall Vendor or a manufacturer approved or licensed by the vendor. Use approved reinforcement for the chosen MSE wall system. The list of approved reinforcement for each MSE wall system is available from the website shown elsewhere in this provision.

1. Steel Reinforcement

Provide Type 1 material certifications in accordance with Article 106-3 of the *Standard Specifications* for steel reinforcement. Use welded wire grid reinforcement ("mesh", "mats" and "ladders") that meet Article 1070-3 of the *Standard Specifications* and metallic strip reinforcement ("straps") that meet ASTM A572 or A1011. Galvanize steel reinforcement in accordance with Section 1076 of the *Standard Specifications*.

2. Geogrid Reinforcement

Define "machine direction" (MD) for geogrids in accordance with ASTM D4439. Provide Type 1 material certifications for geogrid strengths in the MD in accordance with Article 1056-3 of the *Standard Specifications*. Test geogrids in accordance with ASTM D6637.

C. Bearing Pads

Use bearing pads that meet Section 3.6.1.a of the *FHWA Design and Construction of Mechanically Stabilized Earth Walls and Reinforced Soil Slopes – Volume I* (Publication No. FHWA-NHI-10-024).

D. Miscellaneous Components

Miscellaneous components may include connectors (e.g., anchors, bars, clamps, pins, plates, ties, etc.), fasteners (e.g., bolts, nuts, washers, etc.) and any other MSE wall components not included above. Galvanize steel components in accordance with Section 1076 of the *Standard Specifications*. Provide approved miscellaneous components for the chosen MSE wall system. The list of approved miscellaneous components for each MSE wall system is available from the website shown elsewhere

in this provision.

3.0 PRECONSTRUCTION REQUIREMENTS

A. MSE Wall Surveys

The Retaining Wall Plans show a plan view, typical sections, details, notes and an elevation or profile view (wall envelope) for each MSE wall. Before beginning MSE wall design, survey existing ground elevations shown in the plans and other elevations in the vicinity of MSE wall locations as needed. Based on these elevations, finished grades and actual MSE wall dimensions and details, submit revised wall envelopes for acceptance. Use accepted wall envelopes for design.

B. MSE Wall Designs

Submit 11 copies of working drawings and 3 copies of design calculations and a PDF copy of each for MSE wall designs at least 30 days before the preconstruction meeting. Do not begin MSE wall construction until a design submittal is accepted.

Use a prequalified MSE Wall Design Consultant to design MSE walls. Provide designs sealed by a Design Engineer approved as a Geotechnical Engineer (key person) for the MSE Wall Design Consultant.

Design MSE walls in accordance with the plans, *AASHTO LRFD Bridge Design Specifications* and any NCDOT restrictions for the chosen MSE wall system unless otherwise required. Design MSE walls for seismic if walls are located in seismic zone 2 based on Figure 2-1 of the *Structure Design Manual*. Use a uniform reinforcement length throughout the wall height of at least 0.7H with H as defined for the embedment requirements in this provision or 6 ft, whichever is greater, unless shown otherwise in the plans. Extend the reinforced zone at least 6" beyond end of reinforcement. Do not locate drains, the reinforced zone or leveling pads outside right-of-way or easement limits.

Use the simplified method for determining maximum reinforcement loads and approved design parameters for the chosen MSE wall system or default values in accordance with the AASHTO LRFD specifications. Design steel components including reinforcement and connectors for the design life noted in the plans and aggregate type in the reinforced zone. Use corrosion loss rates for galvanizing in accordance with the AASHTO LRFD specifications for nonaggressive backfill and carbon steel corrosion rates in accordance with the following:

CARBON STEEL CORROSION RATES	
Aggregate Type (in the reinforced zone)	**Corrosion Loss Rate (after zinc depletion)**
Coarse	0.47 mil/year
Fine (except abutment walls)	0.58 mil/year
Fine (abutment walls)	0.70 mil/year

For geogrid reinforcement and connectors, use approved geogrid properties for the design life noted in the plans and aggregate type in the reinforced zone.

When noted in the plans, design MSE walls for a live load (traffic) surcharge of 250 lb/sf in accordance with Figure C11.5.5-3(b) of the AASHTO LRFD specifications. For steel beam guardrail with 8 ft posts or concrete barrier rail above MSE walls, analyze top 2 reinforcement layers for traffic impact loads in accordance with Section 7.2 of the FHWA MSE wall manual shown elsewhere in this provision except use the following for geogrid reinforcement rupture:

$$\phi\, T_{al}\, R_c \geq T_{max} + (T_I / RF_{CR})$$

Where,

ϕ = resistance factor for tensile resistance in accordance with Section 7.2.1 of the FHWA MSE wall manual,

T_{al} = long-term geogrid design strength approved for chosen MSE wall system,

R_c = reinforcement coverage ratio = 1 for continuous geogrid reinforcement,

T_{max} = factored static load in accordance with Section 7.2 of the FHWA MSE wall manual,

T_I = factored impact load in accordance with Section 7.2 of the FHWA MSE wall manual and

RF_{CR} = creep reduction factor approved for chosen MSE wall system.

If existing or future obstructions such as foundations, guardrail, fence or handrail posts, moment slabs, pavements, pipes, inlets or utilities will interfere with reinforcement, maintain a clearance of at least 3" between obstructions and reinforcement unless otherwise approved. Locate reinforcement layers so all of reinforcement length is within 3" of corresponding connection elevations.

Use 6" thick cast-in-place unreinforced concrete leveling pads beneath panels and SRW units that are continuous at steps and extend at least 6" in front of and behind bottom row of panels or SRW units. Unless required otherwise in the plans, embed top of leveling pads in accordance with the following requirements:

EMBEDMENT REQUIREMENTS		
Front Slope[1] (H:V)	**Minimum Embedment Depth[2] (whichever is greater)**	
6:1 or flatter (except abutment walls)	H/20	1 ft for H ≤ 10 ft 2 ft for H > 10 ft
6:1 or flatter (abutment walls)	H/10	2 ft
> 6:1 to < 3:1	H/10	2 ft
3:1 to 2:1	H/7	2 ft

1. Front slope is as shown in the plans.
2. Define "H" as the maximum design height plus embedment per wall with the design height and embedment as shown in the plans.

When noted in the plans, locate a continuous aggregate shoulder drain along base of reinforced zone behind aggregate. Provide wall drainage systems consisting of drains and outlet components in accordance with Standard Drawing No. 816.02 of the *Roadway Standard Drawings*.

For MSE walls with panels, place at least 2 bearing pads in each horizontal panel joint so the final horizontal joint opening is between 5/8" and 7/8". Additional bearing pads may be required for panels wider than 5 ft as determined by the Engineer. Cover joints at back of panels with filtration geotextiles at least 12" wide.

For segmental retaining walls, fill SRW unit core spaces with coarse aggregate and between and behind SRW units with coarse aggregate for a horizontal distance of at least 18".

Separation geotextiles are required between aggregate and overlying fill or pavement sections except when concrete pavement, full depth asphalt or cement treated base is placed directly on aggregate. Separation geotextiles may also be required between coarse aggregate and backfill or natural ground as determined by the Engineer.

Unless required otherwise in the plans, use reinforced concrete coping at top of walls. Extend coping at least 6" above where the grade intersects back of coping unless required otherwise in the plans. Use coping dimensions shown in the plans and cast-in-place concrete coping for segmental retaining walls and when noted in the plans. At the Contractor's option, connect cast-in-place concrete coping to panels and SRW units with dowels or extend coping down back of MSE walls. Also, connect cast-in-place leveling concrete for precast concrete coping to panels with dowels. When concrete barrier rail is required above MSE walls, use concrete barrier rail with moment slab as shown in the plans.

Submit working drawings and design calculations for acceptance in accordance with Article 105-2 of the *Standard Specifications*. Submit working drawings showing plan views, wall profiles with required resistances, typical sections with reinforcement and connection details, aggregate locations and types, geotextile locations and details of leveling pads, panels or SRW units, coping, bin walls, slip joints, etc. If necessary, include details on working drawings for concrete barrier rail with moment slab, reinforcement splices if allowed for the chosen MSE wall system, reinforcement connected to end bent caps and obstructions extending through walls or interfering with reinforcement, leveling pads, barriers or moment slabs. Submit design calculations for each wall section with different surcharge loads, geometry or material parameters. At least one analysis is required for each wall section with different reinforcement lengths. When designing MSE walls with computer software other than MSEW, use MSEW version 3.0 with update 14.2 or later, manufactured by ADAMA Engineering, Inc. to verify the design. At least one MSEW analysis is required per 100 ft of wall length with at least one MSEW analysis for the wall section with the longest reinforcement. Submit electronic MSEW input files and PDF output files with design calculations.

C. Preconstruction Meeting

Before starting MSE wall construction, hold a preconstruction meeting to discuss the construction and inspection of the MSE walls. Schedule this meeting after all MSE wall submittals have been accepted. The Resident or Bridge Maintenance Engineer, Bridge Construction Engineer, Geotechnical Operations Engineer, Contractor and MSE Wall Installer Superintendent will attend this preconstruction meeting.

4.0 CORROSION MONITORING

Corrosion monitoring is required for MSE walls with steel reinforcement. The Engineer will determine the number of monitoring locations and where to install the instrumentation. Contact the Materials and Tests (M&T) Unit before beginning wall construction. M&T will provide the corrosion monitoring instrumentation kits and if necessary, assistance with installation.

5.0 SITE ASSISTANCE

Unless otherwise approved, provide an MSE Wall Vendor representative to assist and guide the MSE Wall Installer on-site for at least 8 hours when the first panels or SRW units and reinforcement layer are placed. If problems are encountered during construction, the Engineer may require the vendor representative to return to the site for a time period determined by the Engineer.

6.0 CONSTRUCTION METHODS

Control drainage during construction in the vicinity of MSE walls. Direct run off away from MSE walls, aggregate and backfill. Contain and maintain aggregate and backfill and protect material from erosion.

Excavate as necessary for MSE walls in accordance with the accepted submittals. If applicable and at the Contractor's option, use temporary shoring for wall construction instead of temporary slopes to construct MSE walls. Define "temporary shoring for wall construction" as temporary shoring not shown in the plans or required by the Engineer including shoring for OSHA reasons or the Contractor's convenience.

Unless required otherwise in the plans, install foundations located in the reinforced zone before placing aggregate or reinforcement. Notify the Engineer when foundation excavation is complete. Do not place leveling pad concrete, aggregate or reinforcement until excavation dimensions and foundation material are approved.

Construct cast-in-place concrete leveling pads at elevations and with dimensions shown in the accepted submittals and in accordance with Section 420 of the *Standard Specifications*. Cure leveling pads at least 24 hours before placing panels or SRW units.

Erect and support panels and stack SRW units with no negative batter (wall face leaning forward) so the final wall position is as shown in the accepted submittals. Place SRW units with a maximum vertical joint width of 3/8".

Set panels with a vertical joint width of 3/4". Place bearing pads in horizontal panel joints

and cover all panel joints with filtration geotextiles as shown in the accepted submittals. Attach filtration geotextiles to back of panels with adhesives, tapes or other approved methods.

Stagger panels and SRW units to create a running bond by centering panels or SRW units over joints in the row below as shown in the accepted submittals. Construct MSE walls with the following tolerances:

A. SRW units are level from front to back and between units when checked with a 3 ft long level,

B. Final wall face is within 3/4" of horizontal and vertical alignment shown in the accepted submittals when measured along a 10 ft straightedge and

C. Final wall plumbness (batter) is within 0.5° of vertical unless otherwise approved.

Place reinforcement at locations and elevations shown in the accepted submittals and within 3" of corresponding connection elevations. Install reinforcement with the direction shown in the accepted submittals. Place reinforcement in slight tension free of kinks, folds, wrinkles or creases. Reinforcement may be spliced once per reinforcement length if shown in the accepted submittals. Use reinforcement pieces at least 6 ft long. Contact the Engineer when unanticipated existing or future obstructions such as foundations, guardrail, fence or handrail posts, pavements, pipes, inlets or utilities will interfere with reinforcement. To avoid obstructions, deflect, skew or modify reinforcement as shown in the accepted submittals.

Place aggregate in the reinforced zone in 8" to 10" thick lifts. Compact fine aggregate in accordance with Subarticle 235-3(C) of the *Standard Specifications*. Use only hand operated compaction equipment to compact aggregate within 3 ft of panels or SRW units. At a distance greater than 3 ft, compact aggregate with at least 4 passes of an 8 ton to 10 ton vibratory roller in a direction parallel to the wall face. Smooth wheeled or rubber tired rollers are also acceptable for compacting aggregate. Do not use sheepsfoot, grid rollers or other types of compaction equipment with feet. Do not displace or damage reinforcement when placing and compacting aggregate. End dumping directly on geogrids is not permitted. Do not operate heavy equipment on reinforcement until it is covered with at least 8" of aggregate. Replace any damaged reinforcement to the satisfaction of the Engineer.

Backfill for MSE walls outside the reinforced zone in accordance with Article 410-8 of the *Standard Specifications*. If a drain is required, install wall drainage systems as shown in the accepted submittals and in accordance with Section 816 of the *Standard Specifications*.

Place and construct coping and leveling concrete as shown in the accepted submittals. Construct leveling concrete in accordance with Section 420 of the *Standard Specifications*. Construct cast-in-place concrete coping in accordance with Subarticle 452-3(C) of the *Standard Specifications*. When single faced precast concrete barrier is required in front of and against MSE walls, stop coping just above barrier so coping does not interfere with placing barrier up against wall faces.

When separation geotextiles are required, overlap adjacent geotextiles at least 18" and hold separation geotextiles in place with wire staples or anchor pins as needed. Seal joints above and behind MSE walls between coping and ditches or concrete slope protection with silicone sealant.

7.0 MEASUREMENT AND PAYMENT

MSE Retaining Wall No. __ will be measured and paid in square feet. MSE walls will be measured as the square feet of exposed wall face area with the height equal to the difference between top and bottom of wall elevations. Define "top of wall" as top of coping or top of panels or SRW units for MSE walls without coping. Define "bottom of wall" as shown in the plans and no measurement will be made for portions of MSE walls embedded below bottom of wall elevations.

The contract unit price for *MSE Retaining Wall No.* __ will be full compensation for providing designs, submittals, labor, tools, equipment and MSE wall materials, excavating, backfilling, hauling and removing excavated materials and supplying site assistance, leveling pads, panels, SRW units, reinforcement, aggregate, wall drainage systems, geotextiles, bearing pads, coping, miscellaneous components and any incidentals necessary to construct MSE walls. The contract unit price for *MSE Retaining Wall No.* __ will also be full compensation for reinforcement connected to and aggregate behind end bent caps in the reinforced zone, if required.

The contract unit price for *MSE Retaining Wall No.* __ does not include the cost for ditches, fences, handrails, barrier or guardrail associated with MSE walls as these items will be paid for elsewhere in the contract.

Where it is necessary to provide backfill material behind the reinforced zone from sources other than excavated areas or borrow sources used in connection with other work in the contract, payment for furnishing and hauling such backfill material will be paid as extra work in accordance with Article 104-7 of the *Standard Specifications*. Placing and compacting such backfill material is not considered extra work but is incidental to the work being performed.

Payment will be made under:

Pay Item	**Pay Unit**
MSE Retaining Wall No. __	Square Foot

NORTH CAROLINA PROFESSIONAL SEAL 5741 ENGINEER XAVIER C. BARRETT 8/13/13

TEMPORARY SHORING:
(2-20-07) (Rev. 5-21-13)

SP11 R02

Description

Temporary shoring includes cantilever, braced and anchored shoring and temporary mechanically stabilized earth (MSE) walls. Temporary shoring does not include trench boxes. At the Contractor's option, use any type of temporary shoring unless noted otherwise in the plans or as directed. Design and construct temporary shoring based on actual elevations and shoring dimensions in accordance with the contract and accepted submittals. Construct temporary shoring at locations shown in the plans and as directed. Temporary shoring is required to maintain traffic when a 2:1 (H:V) slope from the top of an embankment or bottom of an excavation will intersect the existing ground line less than 5 ft from the edge of pavement of an open travelway. This provision does not apply to pipe, inlet or utility installation unless noted otherwise in the plans.

Positive protection includes concrete barrier and temporary guardrail. Provide positive protection for temporary shoring at locations shown in the plans and as directed. Positive protection is required if temporary shoring is located in the clear zone in accordance with the *AASHTO Roadside Design Guide.*

(A) Cantilever and Braced Shoring

Cantilever shoring consists of steel sheet piles or H-piles with timber lagging. Braced shoring consists of sheet piles or H-piles with timber lagging and bracing such as beams, plates, walers, struts, rakers, etc. Define "piles" as sheet piles or H-piles.

(B) Anchored Shoring

Anchored shoring consists of sheet piles with walers or H-piles with timber lagging anchored with ground or helical anchors. Driven anchors may be accepted at the discretion of the Engineer. A ground anchor consists of a grouted steel bar or multi-strand tendon with an anchorage. A helical anchor consists of a lead section with a central steel shaft and at least one helix steel plate followed by extensions with only central shafts (no helixes) and an anchorage. Anchorages consist of steel bearing plates with washers and hex nuts for bars or steel wedge plates and wedges for strands. Use a prequalified Anchored Wall Contractor to install ground anchors. Define "anchors" as ground, helical or driven anchors.

(C) Temporary MSE Walls

Temporary MSE walls include temporary geosynthetic and wire walls. Define "temporary wall" as a temporary MSE wall. Define "reinforcement" as geotextile, geogrid, welded wire grid or metallic strip reinforcement.

Temporary geosynthetic walls consist of geotextile or geogrid reinforcement wrapped behind welded wire facing. Define "temporary geotextile wall" as a temporary

geosynthetic wall with geotextile reinforcement and "temporary geogrid wall" as a temporary geosynthetic wall with geogrid reinforcement.

Temporary wire walls consist of welded wire grid or metallic strip reinforcement connected to welded wire facing. Define "Wire Wall Vendor" as the vendor supplying the temporary wire wall.

(D) Embedment

Define "embedment" for cantilever, braced and anchored shoring as the pile depth below the grade in front of shoring. Define "embedment" for temporary walls as the wall height below the grade in front of walls.

(E) Positive Protection

Define "unanchored or anchored portable concrete barrier" as portable concrete barrier (PCB) that meets Standard Drawing No. 1170.01 of the *2012 Roadway Standard Drawings*. Define "concrete barrier" as unanchored or anchored PCB or an approved equal. Define "temporary guardrail" as temporary steel beam guardrail that meets Standard Drawing No. 862.02 of the *2012 Roadway Standard Drawings*.

Materials

Refer to the *2012 Standard Specifications*.

Item	**Section**
Anchor Pins	1056-2
Concrete Barrier Materials	1170-2
Flowable Fill, Excavatable	1000-6
Geotextiles	1056
Neat Cement Grout	1003
Portland Cement Concrete	1000
Select Material	1016
Steel Beam Guardrail Materials	862-2
Steel Plates	1072-2
Steel Sheet Piles and H-Piles	1084
Untreated Timber	1082-2
Welded Wire Reinforcement	1070-3
Wire Staples	1060-8(D)

Provide Type 6 material certifications for shoring materials in accordance with Article 106-3 of the *2012 Standard Specifications*. Use Class IV select material (standard size No. ABC) for temporary guardrail. Use nonshrink neat cement grout or Class A concrete that meets Article 450-2 of the *2012 Standard Specifications* for drilled-in piles. Use untreated timber with a thickness of at least 3" and a bending stress of at least 1,000 psi for timber lagging. Provide steel bracing that meets ASTM A36.

(A) Shoring Backfill

Use Class II, Type 1, Class III, Class V or Class VI select material or material that meets AASHTO M 145 for soil classification A-2-4 with a maximum PI of 6 for shoring backfill except do not use A-2-4 soil for backfill around culverts.

(B) Anchors

Store anchor materials on blocking a minimum of 12" above the ground and protect it at all times from damage; and when placing in the work make sure it is free from dirt, dust, loose mill scale, loose rust, paint, oil or other foreign materials. Load, transport, unload and store anchor materials so materials are kept clean and free of damage. Bent, damaged or defective materials will be rejected.

(1) Ground Anchors

Use high-strength deformed steel bars that meet AASHTO M 275 or seven-wire strands that meet ASTM A886 or Article 1070-5 of the *2012 Standard Specifications*. Splice bars in accordance with Article 1070-9 of the *2012 Standard Specifications*. Do not splice strands. Use bondbreakers, spacers and centralizers that meet Article 6.3.5 of the *AASHTO LRFD Bridge Construction Specifications*.

(2) Helical Anchors

Use helical anchors with an ICC Evaluation Service, Inc. (ICC-ES) report. Helical anchors without an ICC-ES report may be approved at the discretion of the Engineer. Provide couplers, thread bar adapters and bolts recommended by the Anchor Manufacturer to connect helical anchors together and to piles.

(3) Anchorages

Provide steel plates for bearing plates and steel washers, hex nuts, wedge plates and wedges recommended by the Anchor Manufacturer.

(C) Temporary Walls

(1) Welded Wire Facing

Use welded wire reinforcement for welded wire facing, struts and wires. For temporary wire walls, provide welded wire facing supplied by the Wire Wall Vendor or a manufacturer approved or licensed by the vendor. For temporary wire walls with separate reinforcement and facing components, provide connectors (e.g., bars, clamps, plates, etc.) and fasteners (e.g., bolts, nuts, washers, etc.) required by the Wire Wall Vendor.

(2) Geotextiles

Provide Type 2 geotextile for separation and retention geotextiles. Provide Type 5 geotextile for geotextile reinforcement with ultimate tensile strengths in accordance with the accepted submittals.

(3) Geogrid Reinforcement

Handle and store geogrids in accordance with Article 1056-2 of the *2012 Standard Specifications*. Define "machine direction" (MD) and "cross-machine direction" (CD) for geogrids in accordance with ASTM D4439.

Use geogrids with a roll width of at least 4 ft and an "approved" or "approved for provisional use" status code. The list of approved geogrids is available from: connect.ncdot.gov/resources/Materials/Pages/SoilsLaboratory.aspx

Provide geogrids for geogrid reinforcement with design strengths in accordance with the accepted submittals. Geogrids are typically approved for ultimate tensile strengths in the MD and CD or short-term design strengths for a 3-year design life in the MD based on material type. Define material type from the website above for shoring backfill as follows:

Material Type	Shoring Backfill
Borrow	A-2-4 Soil
Fine Aggregate	Class II, Type 1 or Class III Select Material
Coarse Aggregate	Class V or VI Select Material

(4) Welded Wire Grid and Metallic Strip Reinforcement

Provide welded wire grid and metallic strip reinforcement supplied by the Wire Wall Vendor or a manufacturer approved or licensed by the vendor. Use welded wire grid reinforcement ("mesh", "mats" and "ladders") that meet Article 1070-3 of the *2012 Standard Specifications* and metallic strip reinforcement ("straps") that meet ASTM A572 or A1011.

Preconstruction Requirements

(A) Concrete Barrier

Define "clear distance" behind concrete barrier as the horizontal distance between the barrier and edge of pavement. The minimum required clear distance for concrete barrier is shown in the plans. At the Contractor's option or if the minimum required clear distance is not available, set concrete barrier next to and up against traffic side of temporary shoring except for barrier above temporary walls. Concrete barrier with the minimum required clear distance is required above temporary walls.

(B) Temporary Guardrail

Define "clear distance" behind temporary guardrail as the horizontal distance between guardrail posts and temporary shoring. At the Contractor's option or if clear distance for cantilever, braced and anchored shoring is less than 4 ft, attach guardrail to traffic side of shoring as shown in the plans. Place ABC in clear distance and around guardrail posts instead of pavement. Do not use temporary guardrail above temporary walls.

(C) Temporary Shoring Designs

Before beginning temporary shoring design, survey existing ground elevations in the vicinity of shoring locations to determine actual design heights (H). Submit 8 copies of working drawings and 3 copies of design calculations and a PDF copy of each for temporary shoring designs in accordance with Article 105-2 of the *2012 Standard Specifications*. Submit working drawings showing plan views, shoring profiles, typical sections and details of temporary shoring design and construction sequence. Do not begin shoring construction until a design submittal is accepted.

Have cantilever and braced shoring designed, detailed and sealed by an engineer licensed in the state of North Carolina. Use a prequalified Anchored Wall Design Consultant to design anchored shoring. Provide anchored shoring designs sealed by a Design Engineer approved as a Geotechnical Engineer (key person) for an Anchored Wall Design Consultant. Include details in anchored shoring working drawings of anchor locations and lock-off loads, unit grout/ground bond strengths for ground anchors or minimum installation torque and torsional strength rating for helical anchors and if necessary, obstructions extending through shoring or interfering with anchors. Include details in the anchored shoring construction sequence of pile and anchor installation, excavation and anchor testing.

Use a prequalified MSE Wall Design Consultant to design temporary walls. Provide temporary wall designs sealed by a Design Engineer approved as a Geotechnical Engineer (key person) for the MSE Wall Design Consultant. Include details in temporary wall working drawings of geotextile and reinforcement types, locations and directions and obstructions extending through walls or interfering with reinforcement.

(1) Soil Parameters

Design temporary shoring for the assumed soil parameters and groundwater elevations shown in the plans. Assume the following soil parameters for shoring backfill:

(a) Unit weight (γ) = 120 lb/cf;

(b)

Friction Angle (ϕ)	Shoring Backfill
30°	A-2-4 Soil
34°	Class II, Type 1 or Class III Select Material
38°	Class V or VI Select Material

(c) Cohesion (c) = 0 lb/sf.

(2) Traffic Surcharge

Design temporary shoring for a traffic surcharge of 250 lb/sf if traffic will be above and within H of shoring. This traffic surcharge does not apply to construction traffic. Design temporary shoring for any construction surcharge if construction traffic will be above and within H of shoring. For LRFD shoring designs, apply traffic (live load) surcharge in accordance with Figure C11.5.5-3 of the *AASHTO LRFD Bridge Design Specifications*.

(3) Cantilever, Braced and Anchored Shoring Designs

Use shoring backfill for fill sections and voids between cantilever, braced and anchored shoring and the critical failure surface. Use concrete or grout for embedded portions of drilled-in H-piles. Do not use drilled-in sheet piles.

Define "top of shoring" for cantilever, braced and anchored shoring as where the grade intersects the back of sheet piles or H-piles and timber lagging. Design cantilever, braced and anchored shoring for a traffic impact load of 2,000 lb/ft applied 18" above top of shoring if concrete barrier is above and next to shoring or temporary guardrail is above and attached to shoring. For anchored shoring designs, apply traffic impact load as horizontal load (P_{HI}) in accordance with Figure 3.11.6.3-2(a) of the AASHTO LRFD specifications.

Extend cantilever, braced and anchored shoring at least 32" above top of shoring if shoring is designed for traffic impact. Otherwise, extend shoring at least 6" above top of shoring.

Design cantilever, braced and anchored shoring for a maximum deflection of 3" if the horizontal distance to the closest edge of pavement or structure is less than H. Otherwise, design shoring for a maximum deflection of 6". Design cantilever and braced shoring in accordance with the plans and *AASHTO Guide Design Specifications for Bridge Temporary Works*.

Design anchored shoring in accordance with the plans and Article 11.9 of the *AASHTO LRFD Bridge Design Specifications*. Use a resistance factor of 0.80 for tensile resistance of anchors with bars, strands or shafts. Extend the unbonded length for ground anchors and the shallowest helix for helical anchors at least 5 ft behind the critical failure surface. Do not extend anchors beyond right-of-way or easement limits. If existing or future obstructions such as foundations, guardrail

posts, pavements, pipes, inlets or utilities will interfere with anchors, maintain a clearance of at least 6" between obstructions and anchors.

(4) Temporary Wall Designs

Use shoring backfill in the reinforced zone of temporary walls. Separation geotextiles are required between shoring backfill and backfill, natural ground or culverts along the sides of the reinforced zone perpendicular to the wall face. For Class V or VI select material in the reinforced zone, separation geotextiles are also required between shoring backfill and backfill or natural ground on top of and at the back of the reinforced zone.

Design temporary walls in accordance with the plans and Article 11.10 of the *AASHTO LRFD Bridge Design Specifications*. Embed temporary walls at least 18" except for walls on structures or rock as determined by the Engineer. Use a uniform reinforcement length throughout the wall height of at least 0.7H or 6 ft, whichever is greater. Extend the reinforced zone at least 6" beyond end of reinforcement. Do not locate the reinforced zone outside right-of-way or easement limits.

Use the simplified method for determining maximum reinforcement loads in accordance with the AASHTO LRFD specifications. For geotextile reinforcement, use geotextile properties approved by the Department or default values in accordance with the AASHTO LRFD specifications. For geogrid reinforcement, use approved geogrid properties available from the website shown elsewhere in this provision. If the website does not list a short-term design strength for an approved geogrid, use a short-term design strength equal to the ultimate tensile strength divided by 3.5 for the geogrid reinforcement. Use geosynthetic properties for the direction reinforcement will be installed, a 3-year design life and shoring backfill to be used in the reinforced zone.

Do not use more than 4 different reinforcement strengths for each temporary geosynthetic wall. Design temporary geotextile walls for a reinforcement coverage ratio (R_c) of 1.0 and temporary geogrid walls for an R_c of at least 0.8. For geogrid reinforcement with an R_c of less than 1.0, use a maximum horizontal clearance between geogrids of 3 ft and stagger reinforcement so geogrids are centered over gaps in the reinforcement layer below.

For temporary geosynthetic walls, use "L" shaped welded wire facing with 18" to 24" long legs. Locate geotextile or geogrid reinforcement so reinforcement layers are at the same level as the horizontal legs of welded wire facing. Use vertical reinforcement spacing equal to facing height. Wrap geotextile or geogrid reinforcement behind welded wire facing and extend reinforcement at least 3 ft back behind facing into shoring backfill.

For temporary wire walls with separate reinforcement and facing components, attach welded wire grid or metallic strip reinforcement to welded wire facing with a connection approved by the Department. For temporary geogrid and wire walls, retain shoring backfill at welded wire facing with retention geotextiles and extend geotextiles at least 3 ft back behind facing into backfill.

(D) Preconstruction Meeting

The Engineer may require a shoring preconstruction meeting to discuss the construction, inspection and testing of the temporary shoring. If required, schedule this meeting after all shoring submittals have been accepted. The Resident, District or Bridge Maintenance Engineer, Bridge or Roadway Construction Engineer, Geotechnical Operations Engineer, Contractor and Shoring Contractor Superintendent will attend this preconstruction meeting.

Construction Methods

Control drainage during construction in the vicinity of shoring. Direct run off away from shoring and shoring backfill. Contain and maintain backfill and protect material from erosion.

Install positive protection in accordance with the contract and accepted submittals. Use PCB in accordance with Section 1170 of the *2012 Standard Specifications* and Standard Drawing No. 1170.01 of the *2012 Roadway Standard Drawings*. Use temporary guardrail in accordance with Section 862 of the *2012 Standard Specifications* and Standard Drawing No. 862.01, 862.02 and 862.03 of the *2012 Roadway Standard Drawings*.

(A) Tolerances

Construct shoring with the following tolerances:

(1) Horizontal wires of welded wire facing are level in all directions,

(2) Shoring location is within 6" of horizontal and vertical alignment shown in the accepted submittals, and

(3) Shoring plumbness (batter) is not negative and within 2° of vertical.

(B) Cantilever, Braced and Anchored Shoring Installation

If overexcavation behind cantilever, braced or anchored shoring is shown in the accepted submittals, excavate before installing piles. Otherwise, install piles before excavating for shoring. Install cantilever, braced or anchored shoring in accordance with the construction sequence shown in the accepted submittals. Remove piles and if applicable, timber lagging when shoring is no longer needed.

(1) Pile Installation

Install piles with the minimum required embedment and extension in accordance with Subarticles 450-3(D) and 450-3(E) of the *2012 Standard Specifications* except that a pile driving equipment data form is not required. Piles may be installed with a vibratory hammer as approved by the Engineer.

Do not splice sheet piles. Use pile excavation to install drilled-in H-piles. After filling holes with concrete or grout to the elevations shown in the accepted submittals, remove any fluids and fill remaining portions of holes with flowable fill. Cure concrete or grout at least 7 days before excavating.

Notify the Engineer if refusal is reached before pile excavation or driven piles attain the minimum required embedment. When this occurs, a revised design submittal may be required.

(2) Excavation

Excavate in front of piles from the top down in accordance with the accepted submittals. For H-piles with timber lagging and braced and anchored shoring, excavate in staged horizontal lifts with a maximum height of 5 ft. Remove flowable fill and material in between H-piles as needed to install timber lagging. Position lagging with at least 3" of contact in the horizontal direction between the lagging and pile flanges. Do not excavate the next lift until timber lagging for the current lift is installed and if applicable, bracing and anchors for the current lift are accepted. Backfill behind cantilever, braced or anchored shoring with shoring backfill.

(3) Anchor Installation

If applicable, install foundations located behind anchored shoring before installing anchors. Fabricate and install ground anchors in accordance with the accepted submittals, Articles 6.4 and 6.5 of the *AASHTO LRFD Bridge Construction Specifications* and the following unless otherwise approved:

(a) Materials in accordance with this provision are required instead of materials conforming to Articles 6.4 and 6.5.3 of the AASHTO LRFD Specifications,

(b) Encapsulation-protected ground anchors in accordance with Article 6.4.1.2 of the AASHTO LRFD specifications are not required, and

(c) Corrosion protection for unbonded lengths of ground anchors and anchorage covers are not required.

Install helical anchors in accordance with the accepted submittals and Anchor Manufacturer's instructions. Measure torque during installation and do not exceed the torsional strength rating of the helical anchor. Attain the minimum required installation torque and penetration before terminating anchor installation. When replacing a helical anchor, embed last helix of the replacement anchor at least 3 helix plate diameters past the location of the first helix of the previous anchor.

(4) Anchor Testing

Proof test and lock-off anchors in accordance with the accepted submittals and Article 6.5.5 of the *AASHTO LRFD Bridge Construction Specifications* except for the acceptance criteria in Article 6.5.5.5. For the AASHTO LRFD specifications, "ground anchor" refers to a ground or helical anchor and "tendon" refers to a bar, strand or shaft.

(a) Anchor Acceptance

Anchor acceptance is based in part on the following criteria.

(i) For ground and helical anchors, total movement is less than 0.04" between the 1 and 10 minute readings or less than 0.08" between the 6 and 60 minute readings.

(ii) For ground anchors, total movement at maximum test load exceeds 80% of the theoretical elastic elongation of the unbonded length.

(b) Anchor Test Results

Submit 2 copies of anchor test records including movement versus load plots for each load increment within 24 hours of completing each row of anchors. The Engineer will review the test records to determine if the anchors are acceptable.

If the Engineer determines an anchor is unacceptable, revise the anchor design or installation methods. Submit a revised anchored shoring design for acceptance and provide an acceptable anchor with the revised design or installation methods. If required, replace the anchor or provide additional anchors with the revised design or installation methods.

(C) Temporary Wall Installation

Excavate as necessary for temporary walls in accordance with the plans and accepted submittals. If applicable, install foundations located in the reinforced zone before placing shoring backfill or reinforcement unless otherwise approved. Notify the Engineer when foundation excavation is complete. Do not place shoring backfill or reinforcement until excavation dimensions and foundation material are approved.

Erect welded wire facing so the wall position is as shown in the plans and accepted submittals. Set welded wire facing adjacent to each other in the horizontal and vertical direction to completely cover the wall face with facing. Stagger welded wire facing to create a running bond by centering facing over joints in the row below.

Wrap geotextile reinforcement and retention geotextiles behind welded wire facing as shown in the plans and accepted submittals and cover geotextiles with at least 3" of shoring backfill. Overlap adjacent geotextile reinforcement and retention and separation geotextiles at least 18" with seams oriented perpendicular to the wall face. Hold geotextiles in place with wire staples or anchor pins as needed.

Place reinforcement within 3" of locations shown in the plans and accepted submittals and in slight tension free of kinks, folds, wrinkles or creases. Install reinforcement with the direction shown in the plans and accepted submittals. For temporary wire walls with separate reinforcement and facing components, attach welded wire grid or metallic strip reinforcement to welded wire facing as shown in the accepted submittals. Do not splice or overlap reinforcement so seams are parallel to the wall face. Contact the Engineer when unanticipated existing or future obstructions such as foundations, pavements, pipes, inlets or utilities will interfere with reinforcement.

Place shoring backfill in the reinforced zone in 8" to 10" thick lifts. Compact A-2-4 soil and Class II, Type 1 and Class III select material in accordance with Subarticle 235-3(C) of the *2012 Standard Specifications*. Use only hand operated compaction equipment to compact backfill within 3 ft of welded wire facing. At a distance greater than 3 ft, compact shoring backfill with at least 4 passes of an 8 ton to 10 ton vibratory roller in a direction parallel to the wall face. Smooth wheeled or rubber tired rollers are also acceptable for compacting backfill. Do not use sheepsfoot, grid rollers or other types of compaction equipment with feet. Do not displace or damage reinforcement when placing and compacting shoring backfill. End dumping directly on geotextile or geogrid reinforcement is not permitted. Do not operate heavy equipment on reinforcement until it is covered with at least 8" of shoring backfill. Replace any damaged reinforcement to the satisfaction of the Engineer.

Backfill for temporary walls outside the reinforced zone in accordance with Article 410-8 of the *2012 Standard Specifications*. Bench temporary walls into the sides of excavations where applicable. For temporary geosynthetic walls with top of wall within 5 ft of finished grade, remove top facing and incorporate top reinforcement layer into fill when placing fill in front of wall. Temporary walls remain in place permanently unless otherwise required.

Measurement and Payment

Temporary Shoring will be measured and paid in square feet. Temporary walls will be measured as the square feet of exposed wall face area. Cantilever, braced or anchored shoring will be measured as the square feet of exposed shoring face area with the shoring height equal to the difference between the top and bottom of shoring elevations. Define "top of shoring" as where the grade intersects the back of sheet piles or H-piles and timber lagging. Define "bottom of shoring" as where the grade intersects front of sheet piles or H-piles and timber lagging. No measurement will be made for any embedment, shoring extension above top of shoring or pavement thickness above temporary walls.

The contract unit price for *Temporary Shoring* will be full compensation for providing shoring designs, submittals and materials, excavating, backfilling, hauling and removing excavated materials and supplying all labor, tools, equipment and incidentals necessary to construct temporary shoring.

No payment will be made for temporary shoring not shown in the plans or required by the Engineer including shoring for OSHA reasons or the Contractor's convenience. No value engineering proposals will be accepted based solely on revising or eliminating shoring locations shown in the plans or estimated quantities shown in the bid item sheets as a result of actual field measurements or site conditions.

PCB will be measured and paid in accordance with Section 1170 of the *2012 Standard Specifications*. No additional payment will be made for anchoring PCB for temporary shoring. Costs for anchoring PCB will be incidental to temporary shoring.

Temporary guardrail will be measured and paid for in accordance with Section 862 of the *2012 Standard Specifications*.

Payment will be made under:

Pay Item	**Pay Unit**
Temporary Shoring	Square Foot

PROJECT SPECIAL PROVISIONS
GEOENVIRONMENTAL

CONTAMINATED SOIL (8/22/2013)

The Contractor's attention is directed to the fact that soil contaminated with petroleum hydrocarbon compounds exist within the project area. The known areas of contamination are indicated on corresponding plans sheets. Information relating to these contaminated areas, sample locations, and investigation reports are available at the following web address by navigating to the correct letting year and month then selecting, "Plans and Proposals", "Rowan P-5206C", "GeoEnvironmental":

http://dotw-xfer01.dot.state.nc.us/dsplan/

Petroleum contaminated soil may be encountered during any earthwork activities on the project. The Contractor shall only excavate those soils that the Engineer designates necessary to complete a particular task. The Engineer shall determine if soil is contaminated based on petroleum odors and unusual soil staining. Contaminated soil not required to be excavated is to remain in place and undisturbed. Undisturbed soil shall remain in place, whether contaminated or not. The Contractor shall transport all contaminated soil excavated from the project to a facility licensed to accept contaminated soil.

In the event that the Contractor chooses to stockpile the soil temporarily, the stockpile shall be created within the property boundaries of the source material and in accordance with the Stockpile Detail found in the plans. If the volume of contaminated material exceeds available space on site, the Contractor shall obtain a permit from the NCDENR UST Section's Regional Office for off-site temporary storage. Stockpiling contaminated soil will be incidental to the project. The Contractor shall provide disposal manifests and weigh tickets to the Engineer for review and approval. The Engineer will in turn provide the GeoEnvironmental Section with a copy of the disposal manifests and weigh tickets for their records.

Measurement and Payment:

The quantity of contaminated soil hauled, and disposed of shall be the actual number of tons of material, which has been acceptably transported and weighed with certified scales as documented by disposal manifests and weigh tickets. The quantity of contaminated soil, measured as provided above, shall be paid for at the contract unit price per ton for "Hauling, and Disposal of Petroleum Contaminated Soil".

The above price and payment shall be full compensation for all work covered by this section, including, but not limited to loading, transportation, weighing, laboratory testing, disposal, equipment, decontamination of equipment, labor, and personal protective equipment. Excavation of petroleum contaminated soil will be incidental to the project.

8/22/2013

NORTH CAROLINA PROFESSIONAL SEAL 031499 ENGINEER CYRUS F. PARKER

Payment shall be made under:

Pay Item	Pay Unit
Hauling and Disposal of Petroleum Contaminated Soil	Ton

Project: P-5206B County: Rowan

PROJECT SPECIAL PROVISIONS
Utility Construction

HINDE ENGINEERING
License No. C-2639
7520 E. Independence Blvd.
Suite 230
Charlotte, NC 28227
(704) 814-4407

NORTH CAROLINA PROFESSIONAL SEAL 029901 7/2/13 ENGINEER KEVIN S. HINDE

Revise the *Standard Specifications for Roads and Structures,* January 2012, as follows:

Page 10-57; Sub-article 1034-2 (A) Plastic Pipe, first paragraph, add the following sentence:

SDR 35 requires Type III Bedding.

Page 10-57; Sub-article 1034-2 (B) Plastic Pipe, remove lines 7 thru 21:

Force main sewer pipe shall be ductile iron pipe.

Page 10-57; Sub-article 1034-4 (A) Ductile Iron Pipe, first paragraph, add the following sentence:

Ductile iron pipe must be pressure class 350.

Page 10-57; Sub-article 1034-4 (B) Ductile Iron Pipe, first paragraph, add the following sentence:

Ductile iron pipe must be pressure class 350.

Page 10-58; Sub-article 1036-3 (A)(1) Plastic Pipe, first paragraph, add the following sentence:

2-inch PVC pipe shall be SDR 13.5 or type K copper.

Page 10-59; Sub-article 1036-5 Ductile Iron Pipe and Fittings, second paragraph, add the following sentence:

Ductile iron pipe fittings must be made in the USA.

Page 10-59; Sub-article 1036-6 Line 11 Fire Hydrants, first paragraph, add the words:

"grease filled only"

Page 10-59; Sub-article 1036-6 Line 14 Fire Hydrants, first paragraph, delete the words:

"an approved paint of the owner's standard color" and replace with "silver paint"

Page 10-59; Sub-article 1036-8 (A) Sleeves, Couplings and Miscellaneous, first paragraph, delete the words:

"Use cast iron, ductile iron or Type 304 stainless steel tapping sleeves pressure rated at 200 psi" and replace with "Use ductile iron tapping sleeves, two piece (4-inch thru 12-inch) MJ 200 psi rating (no slots on tapping flange side)"

Utility Owner's Contact Information:

Page 15-1; Sub-article 1500-2 Cooperation with the Utility Owner, second paragraph, add the following sentences:

The utility owner is Salisbury-Rowan Utilities. The contact person is Jason H. Wilson, PE, Engineering Manager, and he can be reached by phone at 704-216-7553.

Page 15-1; Sub-article 1500-2 Lines 21 & 22 Cooperation with the Utility Owner, third paragraph, delete the words:

"without prior approval of the owner" and replace with "utility owner staff must operate all existing controls"

Page 15-1; Sub-article 1500-2 Line 23 Cooperation with the Utility Owner, fourth paragraph, delete the number:

"24" and replace with "48"

Page 15-2; Sub-article 1500-7 Submittals and Records, first paragraph, add the following sentence:

USA made products required for water and sewer construction/replacement.

Page 15-2; Sub-article 1500-9 Line 38 Placing Pipelines into Service, second paragraph, delete the words:

"ample time to make arrangements" and replace with "minimum advance notice of 48 hours for water and sewer interruptions"

Page 15-3; Sub-article 1505-3 Line 13 Construction Methods, first paragraph, after the word "ASTM" add the words:

"and City of Salisbury Uniform Construction Standards and Specifications for water and sewer installation"

Page 15-4; Sub-article 1505-3 (E) Construction Methods, third paragraph, add the following sentences:

No concrete blocking behind fire hydrants.

Page 15-4; Sub-article 1505-5 Concrete Encasement of Utility Lines, first paragraph, add the following sentences:

Salisbury-Rowan Utilities' preferred method of protecting pipe or encasing pipe is by the use of steel carrier pipe with spiders. Concrete encasement is only used when the field conditions (locations of other utilities, etc.) does not allow enough room for the encasement pipe.

Page 15-5; Sub-article 1510-2 Materials, first paragraph, add the following sentences:

Acceptable water pipe materials – domestic manufactured (water pipe) pressure class 350 ductile iron pipe (required where existing pipe is ductile iron pipe, under pavement, for road crossings, and where separation issues occur). 2-inch water pipe shall be type K copper where under pavement or road crossings. SDR 13.5 2-inch is allowed outside of roads where separation conflicts do not exist.

Page 15-6; Sub-article 1510-3 (B) Testing and Sterilization, change the allowable leakage formula to:

$$W = LD\sqrt{P} \div 148,000$$

Page 15-6; Sub-article 1510-3 (B) Line 28 Testing and Sterilizations, sixth paragraph, after the word "ASTM" add the words:

"City of Salisbury requirements"

Page 15-6; Sub-article 1510-3 (B) Line 28 Testing and Sterilizations, sixth paragraph, after the words "AWWA C651" add the words:

"(lines must be initially chlorinated to 100 mg/l)"

Page 15-6; Sub-article 1510-3 (B) Line 29 Testing and Sterilizations, sixth paragraph, delete the words:

"an approved independent testing laboratory in accordance with NCDENR requirements" and replace with "the City of Salisbury Water Plant Laboratory (state certified for bacteriological testing)"

Page 15-6; Sub-article 1510-3 (B) Line 32 Testing and Sterilization, seventh paragraph, delete the words:

"may be performed concurrently or" and replace with "shall be performed".

Page 15-6; Sub-article 1510-3 (B) Line 33 Testing and Sterilization, eighth paragraph, add the following sentence:

Waste water from the sterilization of water lines <u>shall not</u> be placed into the sewer system.

Page 15-7; Sub-article 1515-2 Materials, third paragraph, add the following sentence:

(RPZ) required for backflow prevention on new lines while flushing, testing, chlorination, etc.

Page 15-7; Sub-article 1515-2 Line 31 Materials, sixth paragraph, delete the word:

"screw"

Page 15-8; Sub-article 1515-2 (D) Line 29 Materials, second paragraph, delete the words:

"7 cf of clean crushed stone" and replace with "1/2 cubic yard of #67 washed stone under and"

Page 15-10; Sub-article 1520-2 Materials, first paragraph, add the following sentences:

Acceptable sewer pipe materials – domestic manufactured (sewer pipe) pressure class 350 ductile iron pipe (required where existing pipe is ductile iron, under pavement, for road crossings, and where separation issues occur). SDR 35 PVC pipe (with Salisbury-Rowan Utilities specified type II bedding) may be used where the existing pipe is SDR 35, located outside of the road/pavement, and no separation conflicts exist.

Page 15-10; Sub-article 1520-3 (A)(1) Construction Methods, first paragraph, after the word "fittings" add the word:

"wyes"

Page 15-11; Sub-article 1520-3 (A)(2)(a)&(b) Construction Methods, remove lines 6 thru 24:

Low pressure air testing is required by utility owner.

Page 15-11; Sub-article 1520-3 (A)(2)(c) Line 29 Construction Methods, first paragraph, delete the words:

"and hold this pressure for 5 minutes. Reduce the pressure to 3.5 psi" and replace with "and allow the pressure to stabilize at 4.0 psi before starting the test"

Page 15-11; Sub-article 1520-3 (A)(2)(c) Line 30 Construction Methods, first paragraph, delete the words:

"1.0 psi" and replace with "0.5 psi" & delete the words "2.5 psi" and replace with "3.5 psi"

Page 15-13; Sub-article 1525-2 Materials, first paragraph, add the following sentence:

All sewer manholes shall be precast manholes (no brick or block allowed).

Materials:

Provide materials for the proposed water and sewer utilities construction meeting the applicable requirements (i.e. material specifications, standard details, testing, policies, etc.) of the City of Salisbury Standard Utility Details and the *Uniform Construction Standards Manual 5th Ed.,* dated October 17, 2006 (Manual) or latest edition. City of Salisbury details can be obtained from the City at
http://www.salisburync.gov/constructionstandards

Measurement and payment for work will be in accordance with the *Standard Specifications.*

North Carolina Railroad Information:

All work within NCRR R/W to be performed in accordance with North Carolina Railroad Specifications NCR 101, 102 and 103.

Project: P-5206C 121 County: Rowan

PROJECT SPECIAL PROVISIONS
Utility Construction

DAVIS • MARTIN • POWELL dmp
ENGINEERS & SURVEYORS
T: 336-886-4821 I F: 336-886-4458 I License: F-0245
6415 Old Plank Road, High Point, NC 27265 I www.dmp-inc.com

NORTH CAROLINA PROFESSIONAL SEAL 10117 ENGINEER RANDY L. McNEILL
7/11/13

Revise the 2012 Standard Specifications as follows:

Utility Owner's Contact Information:

Page 15-1, Sub-article 1500-2, Cooperation with the Utility Owner:
Add the following paragraphs:

The existing water and sewer facilities belong to Salisbury-Rowan Utilities, the Town of China Grove, and the Town of Landis. Salisbury-Rowan Utilities only owns the existing 24" water main crossing the NCRR R/W near -M2- STA 9288+47, and no conflict is anticipated with this existing water main.

For work involving facilities owned by Salisbury-Rowan Utilities, the Contractor shall contact Salisbury-Rowan Utilities at (704) 216-7553.

For work involving facilities owned by the Town of China Grove, the Contractor shall contact the Town of China Grove at (704) 857-2466.

For work involving facilities owned by the Town of Landis, the Contractor shall contact the Town of Landis at (704) 791-9919.

The Contractor shall provide copies of test results to the respective utility owners for any tests involving their facilities.

Page 15-2, Sub-article 1500-9, Placing Pipelines Into Service, second paragraph:
Delete the words "8 hours" and replace with "4 hours".

Page 15-6, Sub-article 1510-3 (B), Testing and Sterilization:
Change the allowable leakage formula to:

$$W = LD\sqrt{P} \div 148{,}000$$

Page 15-6, Sub-article 1510-3 (B) Line 32, Testing and Sterilization, seventh paragraph: Delete the words "may be performed concurrently or" and replace with "shall be performed".

Compensation

No direct payment will be made for utility construction work required by the preceding provisions, which are general requirements applying to utility construction, and all of the requirements stated will be considered incidental work, paid for at the contract unit prices of the various utility items included in the contract.

123

CDM Smith
5400 Glenwood Avenue
Suite 300
Raleigh, NC 27612
(919) 325-3500
www.cdmsmith.com

NORTH CAROLINA PROFESSIONAL SEAL 14160 ENGINEER DOUGLAS R. SAUNDERS

9.12.13

TIP P-5206D
County: Rowan
Date: September 12, 2013

PROJECT SPECIAL PROVISIONS
Utility Construction

All proposed utility construction shall meet the applicable requirements of the NC Department of Transportation's "Standard Specifications for Roads and Structures" dated January 2012.

Division 15 of the Standard Specifications is revised as follows:

Page 15-1, Paragraph 2 of Section 1500-2
Provide access for Department personnel and the owner's representatives to all phases of construction. Notify Department personnel and the utility owner 2 weeks before commencement of any work and one week before service interruption. Keep utility owners' representatives informed of work progress and provide opportunity for inspection of construction and testing.

The water and sewer lines along this project belong to Landis and Kannapolis Utility Department. Below is listed the utility owners with contact information along this project. Any work on these lines must be coordinated through the Engineer and the utility owner before commencement of any work

Town of Landis Public Works - Mr. W.S. Rowland - (704)857-0131

City of Kannapolis Public Works – Mr. Wilmer Melton, III - (704)920-4200

Page 15-2, Paragraph 3 of Section 1500-7
Provide As-Built plans of the installed utility. The plans shall include notations of the size and type material, installed coordinates of utility controls and horizontal and vertical locations of the piping. Provide 2 copies to the Utility Owner and 2 copies to the Engineer.

Provide the Utility Owner with 2 copies of surveyed As-Builts of both the water and sewer systems constructed.

Page 15-2, Insert New Paragraph After Paragraph 1 of Section 1500-9

Contractor shall notify the Town of Landis and City of Kannapolis Public Works Department 7 business days in advance of performing any tie-in work. Contractor shall notify all affected customers 24 hours in advance of service interruptions. Contractor shall notify all affected critical facilities (i.e. hospitals, schools, medical facilities, etc.) 72 hours or more in advance of service interruption.

Page 15-2, Paragraph 2 of Section 1500-9
Schedule and notify owners and customers in advance of any interruption of water service with ample time to make arrangements. Limit interruption of service to water customers to no more than 8 hours. Provide temporary connections as needed.

TIP P-5206D
County: Rowan
Date: September 12, 2013

The maximum interruption time for the Town of Landis and City of Kannapolis water service is four (4) hours. Any additional time needed shall be approved by the Town of Landis and City of Kannapolis Public Works Department and the Engineer before beginning work.

Page 15-6, Insert New Paragraph After Paragraph 12 of Section 1510-3 Part (B)

Sampling taps shall be provided every 1,000 feet and at the end of each branch. Taps shall be located and constructed so samples may be easily collected without danger to personnel or likelihood of sample contamination.

Sampling taps may be used as blow-offs. The number and location of the taps/blow-offs must be approved by the Utilities Inspector. Hydrants may not be used for bacteriological sampling.

All parts of a potable water system (including service lines) shall be sterilized in accordance with AWWA C601 and these specifications. Preventive and corrective measures during construction (AWWA C601) should be adhered to during construction to ensure success of the sterilization process.

Lines shall be initially chlorinated to 100 mg/l.

Lines must have a minimum free chlorine residual of 24 mg/l after 24 hours.

When the Contractor has determined that the line has been chlorinated to the proper level, he shall request a laboratory confirmation of the free chlorine level. Advance notice shall be given to the Utilities Inspector prior to requesting sampling for chlorine level concentration (on site test) as required in Section 1.80 - Inspection. In lieu of using City resources, the Contractor may use an approved certified testing lab; however City inspection of the test is required.

After the required contact time (24 hours), the Contractor shall have the chlorine residual tested and if the chlorine levels are at least 24 mg/l then the contractor can flush the line and all appurtenances with Town of Landis and City of Kannapolis distribution water until completely purged.

No bacteriological samples will be collected at points where the free chlorine residual exceeds the ambient distribution system free residual by more than 0.5 mg/l.

Care must be taken to discharge the chlorinated water in a manner which will not endanger plant or animal life or be unsafe. Chlorinated water must be discharged in an environmentally safe manner and in accordance with all federal, state, and/or local laws and regulations. Chlorinated sterilization water shall not be discharged into the City's sewer or storm drain systems. Contractor must treat the chlorinated water to meet North Carolina Quality Discharge Standards.

Bacteriological testing/sampling shall be requested on the same day the line is flushed. Bacteriological testing will be performed by the City laboratory Monday through Thursday prior to 12:00 p.m. at least 24 hour notice shall be given the Utilities Inspector/lab prior to sampling. The Utilities Inspector will collect and deliver the samples to the lab (testing fee applies).

Each sample shall be marked legibly, identifying with letters or numbers each sampling point.

TIP P-5206D
County: Rowan
Date: September 12, 2013

Page 15-8, Insert New Paragraph After Paragraph 2 of Section 1515-3

Valves shall be field tested as directed by AWWA Specification C500 and C504 as applicable.

a) *During the last stages of the test and without any reduction in pressure, first the hydrant valves will be closed, then progressing in an orderly manner from the end opposite from the test pump, each main line valve will be closed and pressure released to determine if it is holding pressure (minimum 30 minutes).*

b) *All butterfly valves will be tested to 150 psi (or 1.25 times system pressure, if higher) for a minimum of 30 minutes (each) after the pipeline has been successfully tested.*

Valves shall be tested on a schedule agreed upon by the Utilities Inspector and the Contractor. City inspection is required during the tests.

Division 10 of the Standard Specifications is revised as follows:

Page 10-58, Paragraph 1 of Section 1036-5
Use ductile iron pipe that conforms to ANS1/AWWA C151/A21.51.

All ductile iron pipe shall be Class 350 unless otherwise specified and shall be lined with cement mortar not less than 1/16 inch thick conforming to ANSI Specification A21.4.

Compensation

No direct payment will be made for utility construction work required by the preceding provisions, which are general requirements applying to utility construction, and all of the requirements stated will be considered incidental work, paid for at the contract unit prices of the various utility items included in the contract.

Project: P-5206B County: Rowan

PROJECT SPECIAL PROVISIONS
Utilities by Others

Utility Coordination Consultants

General:

The following utility companies have facilities that will be in conflict with the construction of this project:

A. Duke Energy – Power (Distribution)
B. PSNC Energy – Gas (Distribution)
C. Piedmont Gas – Gas (Distribution)
D. Windstream - Communications
E. AT&T - Communications
F. Time Warner Cable – CATV
G. NCDOT - ITS

The conflicting facilities of these concerns will be adjusted prior to the date of availability, unless otherwise noted and are therefore listed in these special provisions for the benefit of the Contractor. All utility work listed herein will be done by the utility owners. All utilities are shown on the plans from the best available information.

The Contractor's attention is directed to Article 105.8 of the Standard Specifications.

Utilities Requiring Adjustment:

A. Duke Energy – Power (Distribution)

Contact Information: Mr. Steve Ferrell (704) 395-4437

See Utilities by Others Plans for details.

The Duke Energy relocation work will be completed April 30, 2014.

B. PSNC Energy – Gas (Distribution)

Contact Information: Mr. Michael Coleman (704) 810-3210

See Utilities by Others Plans for details.

The PSNC Energy relocation work will be completed by April 30, 2014.

PROJECT SPECIAL PROVISIONS
Utilities by Others

C. Piedmont Gas – Gas (Distribution)

Contact Information: Mr. James Graham (704) 525-1654

See Utilities by Others Plans for details.

The Piedmont Gas relocation work will be completed by April 30, 2014.

D. Windstream – Communications

Contact Information: Mr. Jim Foley (704) 722-2822

See Utilities by Others Plans for details.

The Windstream relocation work will be completed by May 30, 2014.

E. AT&T – Communications

Contact Information: Mr. Steve Mode (704) 732-3241

See Utilities by Others Plans for details.

The AT&T relocation work will be completed by May 30, 2014.

F. Time Warner Cable – CATV

Contact Information: Mr. Mike Connell (704) 378-2624

See Utilities by Others Plans for details.

The Time Warner Cable relocation work will be completed by April 30, 2014.

G. NCDOT – ITS

Contact information: Ms. Sherry Yow (919) 661-3270

See Utilities by Others Plans for details.

The NCDOT – ITS relocation work will be completed by March 30, 2014.

P-5206C

128

Prepared by:
DAVIS • MARTIN • POWELL
ENGINEERS & SURVEYORS
T: 336-886-4821 I F: 336-886-4458 I License: F-0245
6415 Old Plank Road, High Point, NC 27265 I www.dmp-inc.com

PROJECT: P-5206C
COUNTY: Rowan

PROJECT SPECIAL PROVISIONS
Utility

UTILITIES BY OTHERS:

General:

The following utility companies have facilities that will be in conflict with the construction of this project:

A. Duke Energy Corporation – Power Distribution
B. Town of Landis – Power Distribution
C. Windstream Communications – Telephone and Fiber Optic
D. Time Warner – CATV
E. PSNC Energy – Gas

The conflicting facilities of these concerns will be adjusted prior to the date of availability, unless otherwise noted, and are therefore listed in these special provisions for the benefit of the Contractor. All utility work listed herein will be done by the utility owners. All utilities are shown on the plans from the best available information. For utility relocations, see the Utilities by Others (UO) Plans.

The Contractor's attention is directed to Article 105-8 of the Standard Specifications.

Utilities Requiring Adjustment:

A. Duke Energy – Power Distribution

1. Duke Energy owns joint-use poles, which also have telephone and CATV lines attached. Duke Energy also has power distribution lines attached to joint-use poles owned by Windstream. Duke Energy, Windstream, and Time Warner will coordinate with one another concerning relocation of their respective aerial lines.
2. It is anticipated that all Duke Energy power distribution relocations will be completed by May 1, 2014.
3. Contact is Mr. Larry Morris, (704) 382-6299 or Mr. Steve Ferrell, (704) 395-4437.
4. See Utilities by Others Plans for details.

B. Town of Landis – Power Distribution

1. The Town of Landis owns joint-use poles, which also have telephone and CATV lines attached. Landis, Windstream, and Time Warner will coordinate with one another concerning relocation of their respective aerial lines.
2. Relocations of the Town of Landis joint-use poles have been completed.
3. Contact is Mr. Steve Rowland, (704) 791-9919.
4. See Utilities by Others Plans for details.

C. Windstream Communications – Telephone and Fiber Optic

1. Windstream owns joint-use poles, which also have power and CATV lines attached. Windstream also has telephone lines attached to joint-use poles owned by Duke Energy. Duke Energy, Windstream, and Time Warner will coordinate with one another concerning relocation of their respective aerial lines.
2. It is anticipated that all telephone and fiber optic relocations will be completed by May 1, 2014.
3. Contact is Mr. Jim Foley, (704) 722-2822.
4. See Utilities by Others plans for details.

D. Time Warner – CATV

1. Time Warner CATV will relocate aerial lines to new poles set by Duke Energy, Windstream, and the Town of Landis as applicable.
2. It is anticipated that all CATV relocations will be completed by May 1, 2014.
3. Contact is Mr. Michael Connell, (704) 378-2624.
4. See Utilities by Others plans for details.

E. PSNC Energy

1. It is anticipated that the proposed gas line relocations shown on the Utilities by Others plans will be completed by May 1, 2014.
2. Other existing gas lines shown on the plans shall be adjusted as necessary. Where adjustments are necessary, PSNC Energy shall be given 14 days notice prior to when they can begin work, and 21 days to complete their work.
3. Contact is Mr. Michael Coleman, (704) 810-3210 or Mr. Jimmy Gray, (704) 574-3469.
4. See Utilities by Others plans for details.

Project: P-5206D County: Rowan

PROJECT SPECIAL PROVISIONS
Utilities by Others

Utility Coordination Consultants

General:

The following utility companies have facilities that will be in conflict with the construction of this project:

A. Duke Energy – Power (Distribution)
B. Town of Landis - Power (Distribution)
C. Windstream - Communications
D. PSNC Energy – Gas (Distribution)
E. Time Warner Cable – CATV
F. T W Telecom - Communications

The conflicting facilities of these concerns will be adjusted prior to the date of availability, unless otherwise noted and are therefore listed in these special provisions for the benefit of the Contractor. All utility work listed herein will be done by the utility owners. All utilities are shown on the plans from the best available information.

The Contractor's attention is directed to Article 105.8 of the Standard Specifications.

Utilities Requiring Adjustment:

A. Duke Energy – Power (Distribution)

Contact Information: Mr. Steve Ferrell (704) 395-4437

See Utilities by Others Plans for details.

The Duke Energy relocation work will be completed May 30, 2014.

B. Town of Landis - Power (Distribution)

Contact Information: Mr. AJ Molnar (Southeastern Engineering) (704) 523-6045

See Utilities by Others Plans for details.

The Town of Landis relocation work will be completed by May 30, 2014.

PROJECT SPECIAL PROVISIONS
Utilities by Others

C. Windstream – Communications

Contact Information: Mr. Jim Foley (704) 722-2822

See Utilities by Others Plans for details.

The Windstream relocation work will be completed by May 30, 2014.

D. PSNC Energy – Gas (Distribution)

Contact Information: Mr. Michael Coleman (704) 810-3210

See Utilities by Others Plans for details.

The PSNC Energy relocation work will be completed by April 30, 2014

E. Time Warner Cable – CATV

Contact Information: Mr. Mike Connell (704) 378-2624

See Utilities by Others Plans for details.

The Time Warner Cable relocation work will be completed by July 31, 2014.

F. T W Telecom – Communications

Contact Information: Mr. David Cromwell (704) 575-8255

See Utilities by Others Plans for details.

The T W Telecom relocation work will be completed by July 31, 2014.

Project Special Provisions
Erosion Control

STABILIZATION REQUIREMENTS:

Stabilization for this project shall comply with the time frame guidelines as specified by the NCG-010000 general construction permit effective August 3, 2011 issued by the North Carolina Department of Environment and Natural Resources Division of Water Quality. Temporary or permanent ground cover stabilization shall occur within 7 calendar days from the last land-disturbing activity, with the following exceptions in which temporary or permanent ground cover shall be provided in 14 calendar days from the last land-disturbing activity:

- Slopes between 2:1 and 3:1, with a slope length of 10 ft. or less
- Slopes 3:1 or flatter, with a slope of length of 50 ft. or less
- Slopes 4:1 or flatter

The stabilization timeframe for High Quality Water (HQW) Zones shall be 7 calendar days with no exceptions for slope grades or lengths. High Quality Water Zones (HQW) Zones are defined by North Carolina Administrative Code 15A NCAC 04A.0105 (25). Temporary and permanent ground cover stabilization shall be achieved in accordance with the provisions in this contract and as directed.

SEEDING AND MULCHING: (West)

The kinds of seed and fertilizer, and the rates of application of seed, fertilizer, and limestone, shall be as stated below. During periods of overlapping dates, the kind of seed to be used shall be determined. All rates are in pounds per acre.

Shoulder and Median Areas

August 1 - June 1		**May 1 - September 1**	
20#	Kentucky Bluegrass	20#	Kentucky Bluegrass
75#	Hard Fescue	75#	Hard Fescue
25#	Rye Grain	10#	German or Browntop Millet
500#	Fertilizer	500#	Fertilizer
4000#	Limestone	4000#	Limestone

Areas Beyond the Mowing Pattern, Waste and Borrow Areas:

August 1 - June 1		**May 1 - September 1**	
100#	Tall Fescue	100#	Tall Fescue
15#	Kentucky Bluegrass	15#	Kentucky Bluegrass
30#	Hard Fescue	30#	Hard Fescue
25#	Rye Grain	10#	German or Browntop Millet
500#	Fertilizer	500#	Fertilizer
4000#	Limestone	4000#	Limestone

Approved Tall Fescue Cultivars

2nd Millennium	Duster	Magellan	Rendition
Avenger	Endeavor	Masterpiece	Scorpion
Barlexas	Escalade	Matador	Shelby
Barlexas II	Falcon II, III, IV & V	Matador GT	Signia
Barrera	Fidelity	Millennium	Silverstar
Barrington	Finesse II	Montauk	Southern Choice II
Biltmore	Firebird	Mustang 3	Stetson
Bingo	Focus	Olympic Gold	Tarheel
Bravo	Grande II	Padre	Titan Ltd
Cayenne	Greenkeeper	Paraiso	Titanium
Chapel Hill	Greystone	Picasso	Tomahawk
Chesapeake	Inferno	Piedmont	Tacer
Constitution	Justice	Pure Gold	Trooper
Chipper	Jaguar 3	Prospect	Turbo
Coronado	Kalahari	Quest	Ultimate
Coyote	Kentucky 31	Rebel Exeda	Watchdog
Davinci	Kitty Hawk	Rebel Sentry	Wolfpack
Dynasty	Kitty Hawk 2000	Regiment II	
Dominion	Lexington	Rembrandt	

Approved Kentucky Bluegrass Cultivars:

Alpine	Bariris	Envicta	Rugby
Apollo	Bedazzled	Impact	Rugby II
Arcadia	Bordeaux	Kenblue	Showcase
Arrow	Champagne	Midnight	Sonoma
Award	Chicago II	Midnight II	

Approved Hard Fescue Cultivars:

Chariot	Nordic	Rhino	Warwick
Firefly	Oxford	Scaldis II	
Heron	Reliant II	Spartan II	
Minotaur	Reliant IV	Stonehenge	

Native Grass Seeding And Mulching **(West)**

Native Grass Seeding and Mulching shall be performed on the disturbed areas of wetlands and riparian areas, and adjacent to Stream Relocation and/or trout stream construction within a 50 foot zone on both sides of the stream or depression, measured from top of stream bank or center of depression. The stream bank of the stream relocation shall be seeded by a method that does not alter the typical cross section of the stream bank. Native Grass Seeding and Mulching shall also be performed in the permanent soil reinforcement mat section of preformed scour holes, and in other areas as directed.

The kinds of seed and fertilizer, and the rates of application of seed, fertilizer, and limestone, shall be as stated below. During periods of overlapping dates, the kind of seed to be used shall be determined. All rates are in pounds per acre.

August 1 - June 1		**May 1 – September 1**	
18#	Creeping Red Fescue	18#	Creeping Red Fescue
8#	Big Bluestem	8#	Big Bluestem
6#	Indiangrass	6#	Indiangrass
4#	Switchgrass	4#	Switchgrass
35#	Rye Grain	25#	German or Browntop Millet
500#	Fertilizer	500#	Fertilizer
4000#	Limestone	4000#	Limestone

Approved Creeping Red Fescue Cultivars:

Aberdeen	Boreal	Epic	Cindy Lou

Fertilizer shall be 10-20-20 analysis. A different analysis of fertilizer may be used provided the 1-2-2 ratio is maintained and the rate of application adjusted to provide the same amount of plant food as a 10-20-20 analysis and as directed.

Native Grass Seeding and Mulching shall be performed in accordance with Section 1660 of the *Standard Specifications* and vegetative cover sufficient to restrain erosion shall be installed immediately following grade establishment.

Measurement and Payment

Native Grass *Seeding and Mulching* will be measured and paid for in accordance with Article 1660-8 of the *Standard Specifications*.

On cut and fill slopes 2:1 or steeper add 20# Sericea Lespedeza January 1 - December 31.

Fertilizer shall be 10-20-20 analysis. A different analysis of fertilizer may be used provided the 1-2-2 ratio is maintained and the rate of application adjusted to provide the same amount of plant food as a 10-20-20 analysis and as directed.

TEMPORARY SEEDING:

Fertilizer shall be the same analysis as specified for *Seeding and Mulching* and applied at the rate of 400 pounds and seeded at the rate of 50 pounds per acre. German Millet, or Browntop Millet shall be used in summer months and rye grain during the remainder of the year. The Engineer will determine the exact dates for using each kind of seed.

FERTILIZER TOPDRESSING:

Fertilizer used for topdressing shall be 16-8-8 grade and shall be applied at the rate of 500 pounds per acre. A different analysis of fertilizer may be used provided the 2-1-1 ratio is maintained and the rate of application adjusted to provide the same amount of plant food as 16-8-8 analysis and as directed.

SUPPLEMENTAL SEEDING:

The kinds of seed and proportions shall be the same as specified for *Seeding and Mulching*, and the rate of application may vary from 25# to 75# per acre. The actual rate per acre will be determined prior to the time of topdressing and the Contractor will be notified in writing of the rate per acre, total quantity needed, and areas on which to apply the supplemental seed. Minimum tillage equipment, consisting of a sod seeder shall be used for incorporating seed into the soil as to prevent disturbance of existing vegetation. A clodbuster (ball and chain) may be used where degree of slope prevents the use of a sod seeder.

MOWING:

The minimum mowing height on this project shall be six inches.

RESPONSE FOR EROSION CONTROL:

Description

Furnish the labor, materials, tools and equipment necessary to move personnel, equipment, and supplies to the project necessary for the pursuit of any or all of the following work as shown herein, by an approved subcontractor.

Section	Erosion Control Item	Unit
1605	Temporary Silt Fence	LF
1606	Special Sediment Control Fence	LF/TON
1615	Temporary Mulching	ACR
1620	Seed - Temporary Seeding	LB
1620	Fertilizer - Temporary Seeding	TN
1631	Matting for Erosion Control	SY
SP	Coir Fiber Mat	SY
1640	Coir Fiber Baffles	LF
SP	Permanent Soil Reinforcement Mat	SY
1660	Seeding and Mulching	ACR
1661	Seed - Repair Seeding	LB

1661	Fertilizer - Repair Seeding	TON
1662	Seed - Supplemental Seeding	LB
1665	Fertilizer Topdressing	TON
SP	Safety/Highly Visible Fencing	LF
SP	Response for Erosion Control	EA

Construction Methods

Provide an approved subcontractor who performs an erosion control action as described in the NPDES Inspection Form SPPP30. Each erosion control action may include one or more of the above work items.

Measurement and Payment

Response for Erosion Control will be measured and paid for by counting the actual number of times the subcontractor moves onto the project, including borrow and waste sites, and satisfactorily completes an erosion control action described in Form 1675. The provisions of Article 104-5 of the *Standard Specifications* will not apply to this item of work.

Payment will be made under:

Pay Item	**Pay Unit**
Response for Erosion Control	Each

MINIMIZE REMOVAL OF VEGETATION:

The Contractor shall minimize removal of vegetation at stream banks and disturbed areas within the project limits as directed.

STOCKPILE AREAS:

The Contractor shall install and maintain erosion control devices sufficient to contain sediment around any erodible material stockpile areas as directed.

ACCESS AND HAUL ROADS:

At the end of each working day, the Contractor shall install or re-establish temporary diversions or earth berms across access/haul roads to direct runoff into sediment devices. Silt fence sections that are temporarily removed shall be reinstalled across access/haul roads at the end of each working day.

WASTE AND BORROW SOURCES:

Payment for temporary erosion control measures, except those made necessary by the Contractor's own negligence or for his own convenience, will be paid for at the appropriate contract unit price for the devices or measures utilized in borrow sources and waste areas.

No additional payment will be made for erosion control devices or permanent seeding and mulching in any commercial borrow or waste pit. All erosion and sediment control practices that may be required on a commercial borrow or waste site will be done at the Contractor's expense.

TEMPORARY DIVERSION:

This work consists of installation, maintenance, and cleanout of *Temporary Diversions* in accordance with Section 1630 of the *Standard Specifications*. The quantity of excavation for installation and cleanout will be measured and paid for as *Silt Excavation* in accordance with Article 1630-4 of the *Standard Specifications*.

TEMPORARY EARTH BERMS:

Description

This work consists of installing, maintaining, and removing any and all material required for the construction of temporary earth berms. The temporary earth berms shall be used to direct the flow of water to specific erosion control device(s), or to direct water flowing from offsite around/away from specific area(s) of construction.

Construction Methods

The Contractor shall install the temporary earth berms in accordance with the details in the plans and at locations indicated in the plans, and as directed. Upon installation, the earth berms shall be immediately stabilized as provided in Section 1620 of the *Standard Specifications*. Other stabilization methods may be utilized with prior approval from the Engineer.

Upon completion of the project, the temporary earth berms shall be removed. The earth material can be utilized in the filling of silt ditches and detention devices, or graded to match the existing contours and permanently seeded and mulched.

Measurement and Payment

The installation of the temporary earth berms will be paid for as *Borrow Excavation* as provided in Section 230 of the *Standard Specifications* or included in the lump sum price for grading.

Stabilization of the temporary earth berms will be paid for as *Temporary Seeding* as provided in Section 1620 of the *Standard Specifications*.

Such price and payment shall be considered full compensation for all work covered by this section including all materials, construction, maintenance, and removal of the temporary earth berms.

CLEAN WATER DIVERSION:

Description

This work consists of installing, maintaining, and removing any and all material required for the construction of clean water diversions. The clean water diversions shall be used to direct water flowing from offsite around/away from specific area(s) of construction.

Materials

Refer to Division 10

Item	Section
Geotextile for Soil Stabilization, Type 4	1056

Construction Methods

The Contractor shall install the clean water diversions in accordance with the details in the plans and at locations indicated in the plans, and as directed. Upon installation, the excavated material shall be immediately stabilized as provided in Section 1620 of the *Standard Specifications*. Other stabilization methods may be utilized with prior approval from the Engineer.

Line clean water diversion with geotextile unrolled in the direction of flow and lay smoothly but loosely on soil surface without creases. Bury top of slope geotextile edge in a trench at least 5" deep and tamp securely. Make vertical overlaps a minimum of 18" with upstream geotextile overlapping the downstream geotextile.

Secure geotextile with eleven gauge wire staples shaped into a *u* shape with a length of not less than 6" and a throat not less than 1" in width. Place staples along outer edges and throughout the geotextile a maximum of 3 ft. horizontally and vertically.

Measurement and Payment

Silt Excavation will be measured and paid for in accordance with Article 1630-4 of the *Standard Specifications*.

Geotextile for Soil Stabilization will be measured and paid for in accordance with Article 270-4 of the *Standard Specifications*.

Stabilization of the excavated material will be paid for as *Temporary Seeding* as provided in Section 1620 of the *Standard Specifications*.

Such price and payment shall be considered full compensation for all work covered by this section including all materials, construction, maintenance, and removal of the clean water diversions.

SAFETY FENCE AND JURISDICTIONAL FLAGGING:

Description

Safety Fence shall consist of furnishing materials, installing and maintaining polyethylene or polypropylene fence along the outside riparian buffer, wetland, or water boundary, or other boundaries located within the construction corridor to mark the areas that have been approved to infringe within the buffer, wetland, endangered vegetation, culturally sensitive areas or water. The fence shall be installed prior to any land disturbing activities.

Interior boundaries for jurisdictional areas noted above shall be delineated by stakes and highly visible flagging.

Jurisdictional boundaries at staging areas, waste sites, or borrow pits, whether considered outside or interior boundaries shall be delineated by stakes and highly visible flagging.

Materials

(A) Safety Fencing

Polyethylene or polypropylene fence shall be a highly visible preconstructed safety fence approved by the Engineer. The fence material shall have an ultraviolet coating.

Either wood posts or steel posts may be used. Wood posts shall be hardwood with a wedge or pencil tip at one end, and shall be at least 5 ft. in length with a minimum nominal 2" x 2" cross section. Steel posts shall be at least 5 ft. in length, and have a minimum weight of 0.85 lb/ft of length.

(B) Boundary Flagging

Wooden stakes shall be 4 feet in length with a minimum nominal 3/4" x 1-3/4" cross section. The flagging shall be at least 1" in width. The flagging material shall be vinyl and shall be orange in color and highly visible.

Construction Methods

No additional clearing and grubbing is anticipated for the installation of this fence. The fence shall be erected to conform to the general contour of the ground.

(A) Safety Fencing

Posts shall be set at a maximum spacing of 10 ft., maintained in a vertical position and hand set or set with a post driver. If hand set, all backfill material shall be thoroughly tamped. Wood posts may be sharpened to a dull point if power driven. Posts damaged by power driving shall be removed and replaced prior to final acceptance. The tops of all wood posts shall be cut at a 30-degree angle. The wood posts may, at the option of the Contractor, be cut at this angle either before or after the posts are erected.

The fence geotextile shall be attached to the wood posts with one 2" galvanized wire staple across each cable or to the steel posts with wire or other acceptable means.

Place construction stakes to establish the location of the safety fence in accordance with Article 105-9 or Article 801-1 of the *Standard Specifications.* No direct pay will be made for the staking of the safety fence. All stakeouts for safety fence shall be considered incidental to the work being paid for as "Construction Surveying", except that where there is no pay item for construction surveying, all safety fence stakeout will be performed by state forces.

The Contractor shall be required to maintain the safety fence in a satisfactory condition for the duration of the project as determined by the Engineer.

(B) Boundary Flagging

Boundary flagging delineation of interior boundaries shall consist of wooden stakes on 25 feet maximum intervals with highly visible orange flagging attached. Stakes shall be installed a minimum of 6" into the ground. Interior boundaries may be staked on a tangent that runs parallel to buffer but must not encroach on the buffer at any location. Interior boundaries of hand clearing shall be identified with a different colored flagging to distinguish it from mechanized clearing.

Boundary flagging delineation of interior boundaries will be placed in accordance with Article 105-9 or Article 801-1 of the *Standard Specifications*. No direct pay will be made for delineation of the interior boundaries. This delineation will be considered incidental to the work being paid for as *Construction Surveying,* except that where there is no pay item or construction surveying the cost of boundary flagging delineation shall be included in the unit prices bid for the various items in the contract. Installation for delineation of all jurisdictional boundaries at staging areas, waste sites, or borrow pits shall consist of wooden stakes on 25 feet maximum intervals with highly visible orange flagging attached. Stakes shall be installed a minimum of 6" into the ground. Additional flagging may be placed on overhanging vegetation to enhance visibility but does not substitute for installation of stakes.

Installation of boundary flagging for delineation of all jurisdictional boundaries at staging areas, waste sites, or borrow pits shall be performed in accordance with Subarticle 230-4(B)(3)(d) or Subarticle 802-2(F) of the *Standard Specifications*. No direct pay will be made for this delineation, as the cost of same shall be included in the unit prices bid for the various items in the contract.

The Contractor shall be required to maintain alternative stakes and highly visible flagging in a satisfactory condition for the duration of the project as determined by the Engineer.

Measurement and Payment

Safety Fence will be measured and paid as the actual number of linear feet of polyethylene or polypropylene fence installed in place and accepted. Such payment will be full compensation including but not limited to furnishing and installing fence geotextile with necessary posts and post bracing, staples, tie wires, tools, equipment and incidentals necessary to complete this work.

Payment will be made under:

Pay Item	**Pay Unit**
Safety Fence	Linear Foot

PERMANENT SOIL REINFORCEMENT MAT:

Description

This work consists of furnishing and placing *Permanent Soil Reinforcement Mat*, of the type specified, over previously prepared areas as directed.

Materials

The product shall be a permanent erosion control reinforcement mat and shall be constructed of synthetic or a combination of coconut and synthetic fibers evenly distributed throughout the mat between a bottom UV stabilized netting and a heavy duty UV stabilized top net. The matting shall be stitched together with UV stabilized polypropylene thread to form a permanent three-dimensional structure. The mat shall have the following minimum physical properties:

Property	**Test Method**	**Value**	**Unit**
Light Penetration	ASTM D6567	9	%
Thickness	ASTM D6525	0.40	in
Mass Per Unit Area	ASTM D6566	0.55	lb/sy
Tensile Strength	ASTM D6818	385	lb/ft
Elongation (Maximum)	ASTM D6818	49	%
Resiliency	ASTM D1777	>70	%
UV Stability *	ASTM D4355	≥80	%
Porosity (Permanent Net)	ECTC Guidelines	≥85	%
Maximum Permissible Shear Stress (Vegetated)	Performance Bench Test	≥8.0	lb/ft^2
Maximum Allowable Velocity (Vegetated)	Performance Bench Test	≥16.0	ft/s

*ASTM D1682 Tensile Strength and % strength retention of material after 1000 hours of exposure.

Submit a certification (Type 1, 2, or 3) from the manufacturer showing:

(A) the chemical and physical properties of the mat used, and
(B) conformance of the mat with this specification.

Construction Methods

Matting shall be installed in accordance with Subarticle 1631-3(B) of the *Standard Specifications*.

All areas to be protected with the mat shall be brought to final grade and seeded in accordance with Section 1660 of the *Standard Specifications*. The surface of the soil shall be smooth, firm, stable and free of rocks, clods, roots or other obstructions that would prevent the mat from lying in direct contact with the soil surface. Areas where the mat is to be placed will not need to be mulched.

Measurement and Payment

Permanent Soil Reinforcement Mat will be measured and paid for as the actual number of square yards measured along the surface of the ground over which Permanent Soil Reinforcement Mat is installed and accepted. Overlaps will not be included in the measurement, and will be considered as incidental to the work. Such payment shall be full compensation for furnishing and installing the mat, including overlaps, and for all required maintenance.

Payment will be made under:

Pay Item	**Pay Unit**
Permanent Soil Reinforcement Mat	Square Yard

SKIMMER BASIN WITH BAFFLES:

Description

Provide a skimmer basin to remove sediment from construction site runoff at locations shown in the erosion control plans. See the Skimmer Basin with Baffles Detail sheet provided in the erosion control plans. Work includes constructing sediment basin, installation of temporary slope drain pipe and coir fiber baffles, furnishing, installation and cleanout of Faircloth Skimmers or other approved equivalent device, providing and placing stone pad on bottom of basin underneath skimmer device, providing and placing a geotextile emergency spillway liner, providing coir fiber mat stabilization for the skimmer outlet, disposing of excess materials, removing temporary slope drain, coir fiber baffles, geotextile liner and skimmer device, backfilling basin area with suitable material and providing proper drainage when basin area is abandoned.

Materials

Item	Section
Stone for Erosion Control, Class B	1042
Geotextile for Soil Stabilization, Type 4	1056
Fertilizer for Temporary Seeding	1060-2
Seed for Temporary Seeding	1060-4
Seeding and Mulching	1060-4
Matting for Erosion Control	1060-8
Staples	1060-8
Coir Fiber Mat	1060-14
Temporary Slope Drain	1622-2
Coir Fiber Baffle	1640

Provide appropriately sized Faircloth skimmer or other approved equivalent device.
Provide Schedule 40 PVC pipe with a length of 6 ft. to attach to the skimmer and the coupling connection to serve as the arm pipe. For skimmer sizes of 2.5 in. and smaller, the arm pipe diameter shall be 1.5 inches. For skimmer sizes of 3 in. and larger, refer to manufacturer recommendation.

Provide 4" diameter Schedule 40 PVC pipe to attach to coupling connection of Faircloth skimmer to serve as the barrel pipe through the earthen dam.

Anchors: Staples, stakes, or reinforcement bars shall be used as anchors.

Wooden Stakes:

Provide hardwood stakes 12"- 24" long with a 2" x 2" nominal square cross section. One end of the stake must be sharpened or beveled to facilitate driving through the coir fiber mat and down into the underlying soil. The other end of the stake needs to have a 1"- 2" long head at the top with a 1"- 2" notch following to catch and secure the coir fiber mat.

Steel Reinforcement Bars:

Provide uncoated #10 steel reinforcement bars 24" nominal length. The bars shall have a 4" diameter bend at one end with a 4" straight section at the tip to catch and secure the coir fiber mat.

Staples:

Provide staples made of 0.125" diameter new steel wire formed into a *u* shape not less than 12" in length with a throat of 1" in width.

Construction Methods

Excavate basin according to the erosion control plans with basin surface free of obstructions, debris, and pockets of low-density material. Install temporary slope drain pipe and construct the emergency spillway according to the Skimmer Basin with Baffles Detail sheet in the erosion control plans. Temporary slope drain pipe at inlet of basin may be replaced by geotextile as directed. Construct the coir fiber baffles according to *Roadway Standard Drawings* No. 1640.01 and Section 1640 of the *Standard Specifications*.

Install Faircloth skimmer or other approved equivalent device according to manufacturer recommendations. Install 4" Schedule 40 PVC pipe into dam on the lower side of basin 1 ft. from the bottom of the basin and according to the detail, and extend the pipe so the basin will drain. Attach a 6 ft. arm pipe to the coupling connection and Faircloth skimmer according to manufacturer recommendations. Attach the rope included with the skimmer to the tee between the vent socket and the tube inlet, and the other end to a wooden stake or metal post. Clean out skimmer device when it becomes clogged with sediment and/or debris and is unable to float at the top of water in skimmer basin. Take appropriate measures to avoid ice accumulation in the skimmer device. Construct a stone pad of Class B stone directly underneath the skimmer device at bottom of basin. The pad shall be a minimum of 12" in height, and shall have a minimum cross sectional area of 4 ft. by 4 ft.

Line emergency spillway with geotextile unrolled in the direction of flow and lay smoothly but loosely on soil surface without creases. Bury edges of geotextile in a trench at least 5" deep and tamp firmly. If geotextile for the emergency spillway is not one continuous piece of material, make horizontal overlaps a minimum of 18" with upstream geotextile overlapping the downstream geotextile. Secure geotextile with eleven gauge wire staples shaped into a *u* shape with a length of not less than 12" and a throat not less than 1" in width. Place staples along outer edges and throughout the geotextile a maximum of 3 ft. horizontally and vertically. Geotextile shall be placed to the bottom and across the entire width of the basin according to the Skimmer Basin with Baffles detail. Place sealant inside basin around barrel pipe on top of geotextile with a minimum width of 6 in.

At the skimmer outlet, provide a smooth soil surface free from stones, clods, or debris that will prevent contact of the coir fiber matting with the soil. Unroll the matting and apply without stretching such that it will lie smoothly but loosely on the soil surface. Wooden stakes, reinforcement bars, or staples may be used as anchors in accordance with the details in the plans and as directed. Place anchors across the matting at the ends approximately 1 ft. apart. Place anchors along the outer edges and down the center of the matting 3 ft. apart.

All bare side slope sections of the skimmer basin shall be seeded with a temporary or permanent seed mix as directed and in accordance with Articles 1620-3, 1620-4, 1620-5, 1660-4, 1660-5 and 1660-7 of the *Standard Specifications*. Straw or excelsior matting shall be installed on all bare side slope sections immediately upon the completion of seeding and in accordance with Article 1631-3 of the *Standard Specifications*.

Measurement and Payment

Silt Excavation will be measured and paid for in accordance with Article 1630-4 of the *Standard Specifications*, as calculated from the typical section throughout the length of the basin as shown on the final approved plans.

Geotextile for Soil Stabilization will be measured and paid for in accordance with Article 270-4 of the *Standard Specifications*.

Coir Fiber Baffles will be measured and paid for in accordance with Article 1640-4 of the *Standard Specifications*.

__" *Skimmer* will be measured in units of each. __" *Skimmer* will be measured and paid for as the maximum number of each size skimmer acceptably installed and in use at any one time during the life of the project. Barrel and arm pipe, cleanout, relocation and reinstallation of __" *Skimmer* is considered incidental to the measurement of the quantity of __" *Skimmer* and no separate payment will be made. No separate payment shall be made if __" *Skimmer*, barrel and/or arm pipe(s) are damaged by ice accumulation.

Coir Fiber Mat will be measured and paid for as the actual number of square yards measured along the surface of the ground over which coir fiber mat is installed and accepted.

Temporary Slope Drain will be measured and paid for in accordance with Article 1622-4 of the *Standard Specifications*.

Stone for Erosion Control, Class __ will be measured and paid for in accordance with Article 1610-4 of the *Standard Specifications*.

Seeding and Mulching will be measured and paid for in accordance with Article 1660-8 of the *Standard Specifications*.

Seed for Temporary Seeding will be measured and paid for in accordance with Article 1620-6 of the *Standard Specifications*.

Fertilizer for Temporary Seeding will be measured and paid for in accordance with Article 1620-6 of the *Standard Specifications*.

Matting for Erosion Control will be measured and paid for in accordance with Article 1631-4 of the *Standard Specifications*.

No measurement will be made for other items or for over excavation or stockpiling.

Payment will be made under:

Pay Item	**Pay Unit**
__" Skimmer	Each

Coir Fiber Mat Square Yard

TIERED SKIMMER BASIN WITH BAFFLES:

Description

Provide a tiered skimmer basin to remove sediment from construction site runoff at locations shown in the erosion control plans. See the Tiered Skimmer Basin Detail sheet provided in the erosion control plans. Tiered Skimmer Basins shall be installed in areas where topography creates a large elevation difference between the inlet and outlet of a single skimmer basin. Work includes constructing sediment basins, installation of coir fiber baffles, installation of temporary slope drains, furnishing, installation and cleanout of Faircloth Skimmers or other approved equivalent device, providing and placing stone pad on bottom of basin underneath skimmer device, providing and placing geotextile emergency spillway liners, providing coir fiber mat stabilization for the skimmer outlet, disposing of excess materials, removing temporary slope drains, coir fiber baffles, geotextile liner and skimmer device, backfilling basin area with suitable material and providing proper drainage when basin area is abandoned.

Materials

Item	Section
Stone for Erosion Control, Class B	1042
Geotextile for Soil Stabilization, Type 4	1056
Fertilizer for Temporary Seeding	1060-2
Seed for Temporary Seeding	1060-4
Seeding and Mulching	1060-4
Matting for Erosion Control	1060-8
Staples	1060-8
Coir Fiber Mat	1060-14
Temporary Slope Drain	1622-2
Coir Fiber Baffle	1640

Provide appropriately sized Faircloth skimmer or other approved equivalent device.

Provide Schedule 40 PVC pipe with a length of 6 ft. to attach to the skimmer and the coupling connection to serve as the arm pipe. For skimmer sizes of 2.5 in. and smaller, the arm pipe diameter shall be 1.5 inches. For skimmer sizes of 3 in. and larger, refer to manufacturer recommendation.

Provide 4" diameter Schedule 40 PVC pipe to attach to coupling connection of Faircloth skimmer to serve as the barrel pipe through the earthen dam.

Anchors: Staples, stakes, or reinforcement bars shall be used as anchors.

Wooden Stakes:

Provide hardwood stakes 12"- 24" long with a 2" x 2" nominal square cross section. One end of the stake must be sharpened or beveled to facilitate driving through the coir fiber mat and down into the underlying soil. The other end of the stake needs to have a 1"- 2" long head at the top with a 1"- 2" notch following to catch and secure the coir fiber mat.

Steel Reinforcement Bars:

Provide uncoated #10 steel reinforcement bars 24" nominal length. The bars shall have a 4" diameter bend at one end with a 4" straight section at the tip to catch and secure the coir fiber mat.

Staples:

Provide staples made of 0.125" diameter new steel wire formed into a *u* shape not less than 12" in length with a throat of 1" in width.

Construction Methods

Excavate basins according to the erosion control plans with basin surface free of obstructions, debris, and pockets of low-density material. Install temporary slope drains and construct the emergency spillways according to the Tiered Skimmer Basin Detail sheet in the erosion control plans. Construct the coir fiber baffles according to *Roadway Standard Drawings* No. 1640.01 and Section 1640 of the *Standard Specifications*. Multiple upper basins, or Modified Silt Basins Type 'B' as labeled on the detail, may be required based on site conditions and as directed.

Install Faircloth skimmer or other approved equivalent device according to manufacturer recommendations. Install 4" Schedule 40 PVC pipe into dam on the lower side of basin 1 ft. from the bottom of the basin and according to the detail, and extend the pipe so the basin will drain. Attach a 6 ft. arm pipe to the coupling connection and Faircloth skimmer according to manufacturer recommendations. Attach the rope included with the skimmer to the tee between the vent socket and the tube inlet, and the other end to a wooden stake or metal post. Clean out skimmer device when it becomes clogged with sediment and/or debris and is unable to float at the top of water in skimmer basin. Take appropriate measures to avoid ice accumulation in the skimmer device. Construct a stone pad of Class B stone directly underneath the skimmer device at bottom of basin. The pad shall be a minimum of 12" in height, and shall have a minimum cross sectional area of 4 ft. by 4 ft.

Install a minimum of 2 (two) temporary slope drains to dewater the upper basin to the lower basin. The slope drains shall be installed a minimum of 6 inches, or one radius width of the temporary slope drain pipe, below the base of the emergency spillway section of the upper basin. The outlet of the slope drains shall be placed on the bottom elevation of the lower basin.

Line emergency spillways with geotextile unrolled in the direction of flow and lay smoothly but loosely on soil surface without creases. Bury edges of geotextile in a trench at least 5" deep and

tamp firmly. If geotextile for emergency spillways is not one continuous piece of material, make horizontal overlaps a minimum of 18" with upstream geotextile overlapping the downstream geotextile. Secure geotextile with eleven gauge wire staples shaped into a *u* shape with a length of not less than 12" and a throat not less than 1" in width. Place staples along outer edges and throughout the geotextile a maximum of 3 ft. horizontally and vertically. Geotextile shall be placed to the bottom and across the entire width of the basin according to the Tiered Skimmer Basin with Baffles detail.

At the skimmer outlet, provide a smooth soil surface free from stones, clods, or debris that will prevent contact of the coir fiber matting with the soil. Unroll the matting and apply without stretching such that it will lie smoothly but loosely on the soil surface. Wooden stakes, reinforcement bars, or staples may be used as anchors in accordance with the details in the plans and as directed. Place anchors across the matting at the ends approximately 1 ft. apart. Place anchors along the outer edges and down the center of the matting 3 ft. apart. Place sealant inside basin around barrel pipe on top of geotextile with a minimum width of 6 in.

All bare side slope sections of the skimmer basin shall be seeded with a temporary or permanent seed mix as directed and in accordance with Articles 1620-3, 1620-4, 1620-5, 1660-4, 1660-5 and 1660-7 of the *Standard Specifications*. Straw or excelsior matting shall be installed on all bare side slope sections immediately upon the completion of seeding and in accordance with Article 1631-3 of the *Standard Specifications*.

Measurement and Payment

Silt Excavation will be measured and paid for in accordance with Article 1630-4 of the *Standard Specifications*, as calculated from the typical section throughout the length of the basin as shown on the final approved plans.

Geotextile for Soil Stabilization will be measured and paid for in accordance with Article 270-4 of the *Standard Specifications*.

Coir Fiber Baffles will be measured and paid for in accordance with Article 1640-4 of the *Standard Specifications*.

__" *Skimmer* will be measured in units of each. __" *Skimmer* will be measured and paid for as the maximum number of each size skimmer acceptably installed and in use at any one time during the life of the project. Barrel and arm pipe, cleanout, relocation and reinstallation of __" *Skimmer* is considered incidental to the measurement of the quantity of __" *Skimmer* and no separate payment will be made. No separate payment shall be made if __" *Skimmer*, barrel and/or arm pipe(s) are damaged by ice accumulation.

Coir Fiber Mat will be measured and paid for as the actual number of square yards measured along the surface of the ground over which coir fiber mat is installed and accepted.

Temporary Slope Drain will be measured and paid for in accordance with Article 1622-4 of the *Standard Specifications*.

Stone for Erosion Control, Class __ will be measured and paid for in accordance with Article 1610-4 of the *Standard Specifications*.

Seeding and Mulching will be measured and paid for in accordance with Article 1660-8 of the *Standard Specifications*.

Seed for Temporary Seeding will be measured and paid for in accordance with Article 1620-6 of the *Standard Specifications*.

Fertilizer for Temporary Seeding will be measured and paid for in accordance with Article 1620-6 of the *Standard Specifications*.

Matting for Erosion Control will be measured and paid for in accordance with Article 1631-4 of the *Standard Specifications*.

No measurement will be made for other items or for over excavation or stockpiling.

Payment will be made under:

Pay Item	**Pay Unit**
__" Skimmer	Each
Coir Fiber Mat	Square Yard

WATTLE:

Description

Wattles are tubular products consisting of excelsior fibers encased in synthetic netting. Wattles are used on slopes or channels to intercept runoff and act as a velocity break. Wattles are to be placed at locations shown on the plans or as directed. Installation shall follow the detail provided in the plans and as directed. Work includes furnishing materials, installation of wattles, matting installation, and removing wattles.

Materials

Wattle shall meet the following specifications:

100% Curled Wood (Excelsior) Fibers	
Minimum Diameter	12 in.
Minimum Density	2.5 lb/ft^3 +/- 10%
Net Material	Synthetic
Net Openings	1 in. x 1 in.
Net Configuration	Totally Encased
Minimum Weight	20 lb. +/- 10% per 10 ft. length

Anchors: Stakes shall be used as anchors.

Wooden Stakes:

Provide hardwood stakes a minimum of 2-ft. long with a 2 in. x 2 in. nominal square cross section. One end of the stake must be sharpened or beveled to facilitate driving down into the underlying soil.

Matting shall meet the requirements of Article 1060-8 of the *Standard Specifications*, or shall meet specifications provided elsewhere in this contract.

Provide staples made of 0.125" diameter new steel wire formed into a *u* shape not less than 12" in length with a throat of 1" in width.

Construction Methods

Wattles shall be secured to the soil by wire staples approximately every 1 linear foot and at the end of each section of wattle. A minimum of 4 stakes shall be installed on the downstream side of the wattle with a maximum spacing of 2 linear feet along the wattle, and according to the detail. Install a minimum of 2 stakes on the upstream side of the wattle according to the detail provided in the plans. Stakes shall be driven into the ground a minimum of 10 in. with no more than 2 in. projecting from the top of the wattle. Drive stakes at an angle according to the detail provided in the plans.

Only install wattle(s) to a height in ditch so flow will not wash around wattle and scour ditch slopes and according to the detail provided in the plans and as directed. Overlap adjoining sections of wattles a minimum of 6 in.

Installation of matting shall be in accordance with the detail provided in the plans, and in accordance with Article 1631-3 of the *Standard Specifications*, or in accordance with specifications provided elsewhere in this contract.

The Contractor shall maintain the wattles until the project is accepted or until the wattles are removed, and shall remove and dispose of silt accumulations at the wattles when so directed in accordance with the requirements of Section 1630 of the *Standard Specifications*.

Measurement and Payment

Wattle will be measured and paid for by the actual number of linear feet of wattles which are installed and accepted. Such price and payment will be full compensation for all work covered by this section, including, but not limited to, furnishing all materials, labor, equipment and incidentals necessary to install the *Wattle*.

Matting will be measured and paid for in accordance with Article 1631-4 of the *Standard Specifications*, or in accordance with specifications provided elsewhere in this contract.

Payment will be made under:

Pay Item	**Pay Unit**
Wattle	Linear Foot

COIR FIBER WATTLES WITH POLYACRYLAMIDE (PAM):

Description

Coir Fiber Wattles are tubular products consisting of coir fibers (coconut fibers) encased in coir fiber netting. Coir Fiber Wattles are used on slopes or channels to intercept runoff and act as a velocity break. Coir Fiber Wattles are to be placed at locations shown on the plans or as directed. Installation shall follow the detail provided in the plans and as directed. Work includes furnishing materials, installation of coir fiber wattles, matting installation, PAM application, and removing wattles.

Materials

Coir Fiber Wattle shall meet the following specifications:

100% Coir (Coconut) Fibers	
Minimum Diameter	12 in.
Minimum Density	3.5 lb/ft^3 +/- 10%
Net Material	Coir Fiber
Net Openings	2 in. x 2 in.
Net Strength	90 lbs.
Minimum Weight	2.6 lbs./ft. +/- 10%

Anchors: Stakes shall be used as anchors.

Wooden Stakes:

Provide hardwood stakes a minimum of 2-ft. long with a 2 in. x 2 in. nominal square cross section. One end of the stake must be sharpened or beveled to facilitate driving down into the underlying soil.

Matting shall meet the requirements of Article 1060-8 of the *Standard Specifications*, or shall meet specifications provided elsewhere in this contract.

Provide staples made of 0.125" diameter new steel wire formed into a *u* shape not less than 12" in length with a throat of 1" in width.

Polyacrylamide (PAM) shall be applied in powder form and shall be anionic or neutrally charged. Soil samples shall be obtained in areas where the wattles will be placed, and from offsite material used to construct the roadway, and analyzed for the appropriate PAM flocculant to be utilized with each wattle. The PAM product used shall be listed on the North Carolina

Department of Environment and Natural Resources (NCDENR) Division of Water Quality (DWQ) web site as an approved PAM product for use in North Carolina.

Construction Methods

Coir Fiber Wattles shall be secured to the soil by wire staples approximately every 1 linear foot and at the end of each section of wattle. A minimum of 4 stakes shall be installed on the downstream side of the wattle with a maximum spacing of 2 linear feet along the wattle, and according to the detail. Install a minimum of 2 stakes on the upstream side of the wattle according to the detail provided in the plans. Stakes shall be driven into the ground a minimum of 10 in. with no more than 2 in. projecting from the top of the wattle. Drive stakes at an angle according to the detail provided in the plans.

Only install coir fiber wattle(s) to a height in ditch so flow will not wash around wattle and scour ditch slopes and according to the detail provided in the plans and as directed. Overlap adjoining sections of wattles a minimum of 6 in.

Installation of matting shall be in accordance with the detail provided in the plans, and in accordance with Article 1631-3 of the *Standard Specifications*, or in accordance with specifications provided elsewhere in this contract.

Apply PAM over the lower center portion of the coir fiber wattle where the water is going to flow over at a rate of 2 ounces per wattle, and 1 ounce of PAM on matting on each side of the wattle. PAM applications shall be done during construction activities after every rainfall event that is equal to or exceeds 0.50 in.

The Contractor shall maintain the coir fiber wattles until the project is accepted or until the wattles are removed, and shall remove and dispose of silt accumulations at the wattles when so directed in accordance with the requirements of Section 1630 of the *Standard Specifications*.

Measurement and Payment

Coir Fiber Wattles will be measured and paid for by the actual number of linear feet of wattles which are installed and accepted. Such price and payment will be full compensation for all work covered by this section, including, but not limited to, furnishing all materials, labor, equipment and incidentals necessary to install the *Coir Fiber Wattles*.

Matting will be measured and paid for in accordance with Article 1631-4 of the *Standard Specifications*, or in accordance with specifications provided elsewhere in this contract.

Polyacrylamide(PAM) will be measured and paid for by the actual weight in pounds of PAM applied to the coir fiber wattles. Such price and payment will be full compensation for all work covered by this section, including, but not limited to, furnishing all materials, labor, equipment and incidentals necessary to apply the *Polyacrylamide(PAM)*.

Payment will be made under:

Pay Item	Pay Unit
Polyacrylamide(PAM)	Pound
Coir Fiber Wattle	Linear Foot

SILT FENCE COIR FIBER WATTLE BREAK:
(8-21-12) 1605,1630

Description

Silt fence coir fiber wattle breaks are tubular products consisting of coir fibers (coconut fibers) encased in coir fiber netting and used in conjunction with temporary silt fence at the toe of fills to intercept runoff. Silt fence coir fiber wattle breaks are to be placed at locations shown on the plans or as directed. Installation shall follow the detail provided in the plans and as directed. Work includes furnishing materials, installation, maintenance and removing Silt fence coir fiber wattle breaks.

Materials

Coir fiber wattle shall meet the following specifications:

100% Coir (Coconut) Fibers	
Minimum Diameter	12"
Minimum Length	10 ft
Minimum Density	3.5 lb/cf ± 10%
Net Material	Coir Fiber
Net Openings	2" x 2"
Net Strength	90 lb.
Minimum Weight	2.6 lb/ft ± 10%

Stakes shall be used as anchors. Provide hardwood stakes a minimum of 2-ft long with a 2" x 2" nominal square cross section. One end of the stake shall be sharpened or beveled to facilitate driving down into the underlying soil.

Provide staples made of 0.125" diameter new steel wire formed into a U-shape not less than 12" in length with a throat of 1" in width.

Construction Methods

Excavate a trench the entire length of each wattle with a depth of 1" to 2" for the wattle to be placed. Secure silt fence coir fiber wattle breaks to the soil by wire staples approximately every linear foot and at the end of each wattle. Install at least 4 stakes on the downslope side of the wattle with a maximum spacing of 2 linear feet and according to the detail. Install at least 2 stakes on the upslope side of the silt fence coir fiber wattle break according to the detail

provided in the plans. Drive stakes into the ground at least 10" with no more than 2" projecting from the top of the wattle. Drive stakes at an angle according to the detail provided in the plans.

Install temporary silt fence in accordance with Section 1605 of the *2012 Standard Specifications* and overlap each downslope side of silt fence wattle break by 6".

Maintain the silt fence coir fiber wattle breaks until the project is accepted or until the silt fence coir fiber wattle breaks are removed, and remove and dispose of silt accumulations at the silt fence coir fiber wattle breaks when so directed in accordance with Section 1630 of the *2012 Standard Specifications*.

Measurement and Payment

Coir Fiber Wattle will be measured and paid as the actual number of linear feet of wattles installed and accepted. Such price and payment will be full compensation for all work covered by this provision, including, but not limited to, furnishing all materials, labor, equipment and incidentals necessary to install the silt fence coir fiber wattle break.

Payment will be made under:

Pay Item	Pay Unit
Coir Fiber Wattle	Linear Foot

TEMPORARY ROCK SILT CHECK TYPE A WITH EXCELSIOR MATTING AND POLYACRYLAMIDE (PAM):

Description

Temporary Rock Silt Checks Type A with Excelsior Matting and Polyacrylamide (PAM) are devices utilized in temporary and permanent ditches to reduce runoff velocity and incorporate PAM into the construction runoff to increase settling of sediment particles and reduce turbidity of runoff. Temporary Rock Silt Checks Type A with Excelsior Matting and PAM are to be placed at locations shown on the plans or as directed. Installation shall follow the detail provided in the plans and as directed. Work includes furnishing materials, installation of Temporary Rock Silt Checks Type A, matting installation, PAM application, and removing Temporary Rock Silt Checks Type A with Excelsior Matting and PAM.

Materials

Structural stone shall be class B stone that meets the requirements of Section 1042 of the *Standard Specifications* for Stone for Erosion Control, Class B.

Sediment control stone shall be #5 or #57 stone, which meets the requirements of Section 1005 of the *Standard Specifications* for these stone sizes.

Matting shall meet the requirements of Excelsior Matting in Subarticle 1060-8(B) of the *Standard Specifications*, or shall meet specifications provided elsewhere in this contract.

Polyacrylamide (PAM) shall be applied in powder form and shall be anionic or neutrally charged. Soil samples shall be obtained in areas where the Temporary Rock Silt Checks Type A with Excelsior Matting and PAM will be placed, and from offsite material used to construct the roadway, and analyzed for the appropriate PAM flocculant to be utilized with each Temporary Rock Silt Check Type A. The PAM product used shall be listed on the North Carolina Department of Environment and Natural Resources (NCDENR) Division of Water Quality (DWQ) web site as an approved PAM product for use in North Carolina.

Construction Methods

Temporary Rock Silt Checks Type A shall be installed in accordance with Subarticle 1633-3(A) of the *Standard Specifications*, Roadway Standard Drawing No. 1633.01 and the detail provided in the plans.

Installation of matting shall be in accordance with the detail provided in the plans, and anchored by placing Class B stone on top of the matting at the upper and lower ends.

Apply PAM at a rate of 3.5 ounces over the center portion of the Temporary Rock Silt Checks Type A and matting where the water is going to flow over. PAM applications shall be done during construction activities and after every rainfall event that is equal to or exceeds 0.50 in.

The Contractor shall maintain the Temporary Rock Silt Checks Type A with Excelsior Matting and PAM until the project is accepted or until the Temporary Rock Silt Checks Type A with Excelsior Matting and PAM are removed, and shall remove and dispose of silt accumulations at the Temporary Rock Silt Checks Type A with Excelsior Matting and PAM when so directed in accordance with the requirements of Section 1630 of the *Standard Specifications*.

Measurement and Payment

Temporary Rock Silt Checks Type A will be measured and paid for in accordance with Article 1633-5 of the *Standard Specifications*, or in accordance with specifications provided elsewhere in this contract.

Matting will be measured and paid for in accordance with Article 1631-4 of the *Standard Specifications*, or in accordance with specifications provided elsewhere in this contract.

Polyacrylamide(PAM) will be measured and paid for by the actual weight in pounds of PAM applied to the Temporary Rock Silt Checks Type A. Such price and payment will be full compensation for all work covered by this section, including, but not limited to, furnishing all materials, labor, equipment and incidentals necessary to apply the *Polyacrylamide(PAM)*.

Payment will be made under:

Pay Item	Pay Unit
Polyacrylamide(PAM)	Pound

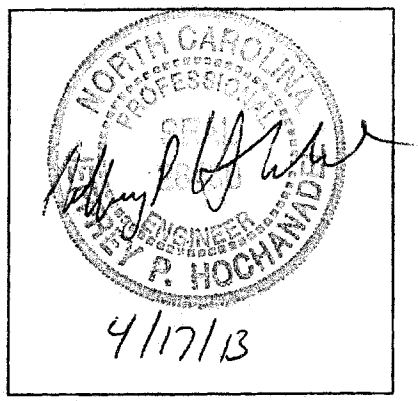

P-5206B
Project Special Provisions
(Version 12.1)
Signals and Intelligent Transportation Systems

Prepared By: SEPI Engineering & Construction
15-Apr-13

Contents

1. SIGNAL HEADS **2**
1.1. MATERIALS 2
A. General: *2*
B. Vehicle Signal Heads: *3*
C. Signal Cable: *5*
2. CONTROLLERS WITH CABINETS **5**
2.1. MATERIALS – TYPE 2070L CONTROLLERS 5
2.2. MATERIALS – GENERAL CABINETS 5
2.3. MATERIALS – TYPE 170E CABINETS 6
A. Type 170 E Cabinets General: *6*
B. Type 170 E Cabinet Electrical Requirements: *6*
C. Type 170 E Cabinet Physical Requirements: *12*
D. Model 2018 Enhanced Conflict Monitor: *13*
2.4. MATERIALS – TYPE 170 DETECTOR SENSOR UNITS 21

1. SIGNAL HEADS

1.1. MATERIALS

A. General:

Fabricate vehicle signal head housings and end caps from die-cast aluminum. Provide visor mounting screws, door latches, and hinge pins fabricated from stainless steel. Provide interior screws, fasteners, and metal parts fabricated from stainless steel or corrosion resistant material.

Fabricate tunnel and traditional visors from sheet aluminum.

Paint all surfaces inside and outside of signal housings and doors. Paint outside surfaces of tunnel and traditional visors, messenger cable mounting assemblies, pole and pedestal mounting assemblies, and pedestrian pushbutton housings. Have electrostatically-applied, fused-polyester paint in highway yellow (Federal Standard 595C, Color Chip Number 13538) a minimum of 2.5 to 3.5 mils thick. Do not apply paint to the latching hardware or rigid vehicle signal head mounting brackets for mast-arm attachments.

Have the interior surfaces of tunnel and traditional visors painted an alkyd urea black synthetic baking enamel with a minimum gloss reflectance and meeting the requirements of MIL-E-10169, "Enamel Heat Resisting, Instrument Black."

For light emitting diode (LED) traffic signal modules, provide the following requirements for inclusion on the Department's Qualified Products List for traffic signal equipment.

1. Sample submittal,
2. Third-party independent laboratory testing results for each submitted module with evidence of testing and conformance with all of the Design Qualification Testing specified in section 6.4 of each of the following Institute of Transportation Engineers (ITE) specifications:
   - Vehicle Traffic Control Signal Heads – Light Emitting Diode (LED) Circular Signal Supplement
   - Vehicle Traffic Control Signal Heads – Light Emitting Diode (LED) Vehicle Arrow Traffic Signal Supplement
   - Pedestrian Traffic Control Signal Indications –Light Emitting Diode (LED) Signal Modules.

   (Note: The Department currently recognizes two approved independent testing laboratories. They are Intertek ETL Semko and Light Metrics, Incorporated with Garwood Laboratories. Independent laboratory tests from other laboratories may be considered as part of the QPL submittal at the discretion of the Department,
3. Evidence of conformance with the requirements of these specifications,
4. A manufacturer's warranty statement in accordance with the required warranty, and
5. Submittal of manufacturer's design and production documentation for the model, including but not limited to, electrical schematics, electronic component values, proprietary part numbers, bill of materials, and production electrical and photometric test parameters.
6. Evidence of approval of the product to bear the Intertek ETL Verified product label for LED traffic signal modules.

In addition to meeting the performance requirements for the minimum period of 60 months, provide a written warranty against defects in materials and workmanship for the modules for a period of 60 months after installation of the modules. During the warranty period, the manufacturer

must provide new replacement modules within 45 days of receipt of modules that have failed at no cost to the State. Repaired or refurbished modules may not be used to fulfill the manufacturer's warranty obligations. Provide manufacturer's warranty documentation to the Department during evaluation of product for inclusion on Qualified Products List (QPL).

B. Vehicle Signal Heads:

Comply with the ITE standard "Vehicle Traffic Control Signal Heads". Provide housings with provisions for attaching backplates.

Provide visors that are 10 inches in length for 12-inch vehicle signal heads.

Provide a termination block with one empty terminal for field wiring for each indication plus one empty terminal for the neutral conductor. Have all signal sections wired to the termination block. Provide barriers between the terminals that have terminal screws with a minimum Number 8 thread size and that will accommodate and secure spade lugs sized for a Number 10 terminal screw.

Mount termination blocks in the yellow signal head sections on all in-line vehicle signal heads. Mount the termination block in the red section on five-section vehicle signal heads.

Furnish vehicle signal head interconnecting brackets. Provide one-piece aluminum brackets less than 4.5 inches in height and with no threaded pipe connections. Provide hand holes on the bottom of the brackets to aid in installing wires to the signal heads. Lower brackets that carry no wires and are used only for connecting the bottom signal sections together may be flat in construction.

For messenger cable mounting, provide messenger cable hangers, wire outlet bodies, balance adjusters, bottom caps, wire entrance fitting brackets, and all other hardware necessary to make complete, watertight connections of the vehicle signal heads to the messenger cable. Fabricate mounting assemblies from malleable iron or steel and provide serrated rings made of aluminum. Provide messenger cable hangers and balance adjusters that are galvanized before being painted. Fabricate balance adjuster eyebolt and eyebolt nut from stainless steel or galvanized malleable iron. Provide messenger cable hangers with U-bolt clamps. Fabricate washers, screws, bolts, clevis pins, cotter pins, nuts, and U-bolt clamps from stainless steel.

Provide LED vehicular traffic signal modules (hereafter referred to as modules) that consist of an assembly that uses LEDs as the light source in lieu of an incandescent lamp for use in traffic signal sections. Use LEDs that are aluminum indium gallium phosphorus (AlInGaP) technology for red and yellow indications and indium gallium nitride (InGaN) for green indications. Install the ultra bright type LEDs that are rated for 100,000 hours of continuous operation from -40°F to +165°F. Design modules to have a minimum useful life of 60 months and to meet all parameters of this specification during this period of useful life.

For the modules, provide spade terminals crimped to the lead wires and sized for a #10 screw connection to the existing terminal block in a standard signal head. Do not provide other types of crimped terminals with a spade adapter.

Ensure the power supply is integral to the module assembly. On the back of the module, permanently mark the date of manufacture (month & year) or some other method of identifying date of manufacture.

Tint the red, yellow and green lenses to correspond with the wavelength (chromaticity) of the LED. Transparent tinting films are unacceptable. Provide a lens that is integral to the unit with a smooth outer surface.

1. LED Circular Signal Modules:

Provide modules in the following configurations: 12-inch circular sections. All makes and models of LED modules purchased for use on the State Highway System shall appear on the current NCDOT Traffic Signal Qualified Products List (QPL).

Provide the manufacturer's model number and the product number (assigned by the Department) for each module that appears on the 2012 or most recent Qualified Products List. In addition, provide manufacturer's certification in accordance with Article 106-3 of the *Standard Specifications,* that each module meets or exceeds the ITE "Vehicle Traffic Control Signal Heads – Light Emitting Diode (LED) Circular Signal Supplement" dated June 27, 2005 (hereafter referred to as VTCSH Circular Supplement) and other requirements stated in this specification.

Provide modules that meet the following requirements when tested under the procedures outlined in the VTCSH Circular Supplement:

Module Type	Max. Wattage at 165° F	Nominal Wattage at 77° F
12-inch red circular	17	11
12-inch green circular	15	15

For yellow circular signal modules, provide modules tested under the procedures outlined in the VTCSH Circular Supplement to insure power required at 77° F is 22 Watts or less for the 12-inch circular module.

Note: Use a wattmeter having an accuracy of ±1% to measure the nominal wattage and maximum wattage of a circular traffic signal module. Power may also be derived from voltage, current and power factor measurements.

2. LED Arrow Signal Modules

Provide 12-inch omnidirectional arrow signal modules. All makes and models of LED modules purchased for use on the State Highway System shall appear on the current NCDOT Traffic Signal Qualified Products List (QPL).

Provide the manufacturer's model number and the product number (assigned by the Department) for each module that appears on the 2012 or most recent Qualified Products List. In addition, provide manufacturer's certification in accordance with Article 106-3 of the *Standard Specifications,* that each module meets or exceeds the requirements for 12-inch omnidirectional modules specified in the ITE "Vehicle Traffic Control Signal Heads – Light Emitting Diode (LED) Vehicle Arrow Traffic Signal Supplement" dated July 1, 2007 (hereafter referred to as VTCSH Arrow Supplement) and other requirements stated in this specification.

Provide modules that meet the following requirements when tested under the procedures outlined in the VTCSH Arrow Supplement:

Module Type	Max. Wattage at 165° F	Nominal Wattage at 77° F
12-inch red arrow	12	9
12-inch green arrow	11	11

For yellow arrow signal modules, provide modules tested under the procedures outlined in the VTCSH Arrow Supplement to insure power required at 77° F is 12 Watts or less.

Note: Use a wattmeter having an accuracy of ±1% to measure the nominal wattage and maximum wattage of an arrow traffic signal module. Power may also be derived from voltage, current and power factor measurements.

C. Signal Cable:

Furnish 16-4 and 16-7 signal cable that complies with IMSA specification 20-1 except provide the following conductor insulation colors:

- For 16-4 cable: white, yellow, red, and green
- For 16-7 cable: white, yellow, red, green, yellow with black stripe tracer, red with black stripe tracer, and green with black stripe tracer. Apply continuous stripe tracer on conductor insulation with a longitudinal or spiral pattern.

Provide a ripcord to allow the cable jacket to be opened without using a cutter. IMSA specification 19-1 will not be acceptable. Provide a cable jacket labeled with the IMSA specification number and provide conductors constructed of stranded copper.

2. CONTROLLERS WITH CABINETS

2.1. MATERIALS – TYPE 2070L CONTROLLERS

Conform to CALTRANS *Transportation Electrical Equipment Specifications* (TEES) (dated August 16, 2002, plus Errata 1 dated October 27, 2003 and Errata 2 dated June 08, 2004) except as required herein.

Furnish Model 2070L controllers. Ensure that removal of the CPU module from the controller will place the intersection into flash.

The Department will provide software at the beginning of the burning-in period. Contractor shall give 5 working days notice before needing software. Program software provided by the Department.

Provide model 2070L controllers with the latest version of OS9 operating software and device drivers, composed of the unit chassis and at a minimum the following modules and assemblies:

- MODEL 2070 1B, CPU Module, Single Board
- MODEL 2070-2A, Field I/O Module (FI/O)
- MODEL 2070-3B, Front Panel Module (FP), Display B (8x40)
- MODEL 2070-4A, Power Supply Module, 10 AMP
- MODEL 2070-7A, Async Serial Com Module (9-pin RS-232)

Furnish one additional MODEL 2070-7A, Async Serial Com Module (9-pin RS-232) for all master controller locations.

For each master location and central control center, furnish a U.S. Robotics V.92 or approved equivalent auto-dial/auto-answer external modem to accomplish the interface to the Department-furnished microcomputers. Include all necessary hardware to ensure telecommunications.

2.2. MATERIALS – GENERAL CABINETS

Provide a moisture resistant coating on all circuit boards.

Provide one 20 mm diameter radial lead UL-recognized metal oxide varistor (MOV) between each load switch field terminal and equipment ground. Electrical performance is outlined below.

PROPERTIES OF MOV SURGE PROTECTOR	
Maximum Continuous Applied Voltage at 185° F	150 VAC (RMS) 200 VDC
Maximum Peak 8x20μs Current at 185° F	6500 A
Maximum Energy Rating at 185° F	80 J
Voltage Range 1 mA DC Test at 77° F	212-268 V
Max. Clamping Voltage 8x20μs, 100A at 77° F	395 V
Typical Capacitance (1 MHz) at 77° F	1600 pF

Provide a power line surge protector that is a two-stage device that will allow connection of the radio frequency interference filter between the stages of the device. Ensure that a maximum continuous current is at least 10A at 120V. Ensure that the device can withstand a minimum of 20 peak surge current occurrences at 20,000A for an 8x20 microsecond waveform. Provide a maximum clamp voltage of 395V at 20,000A with a nominal series inductance of 200μh. Ensure that the voltage does not exceed 395V. Provide devices that comply with the following:

Frequency (Hz)	Minimum Insertion Loss (dB)
60	0
10,000	30
50,000	55
100,000	50
500,000	50
2,000,000	60
5,000,000	40
10,000,000	20
20,000,000	25

2.3. MATERIALS – TYPE 170E CABINETS

A. Type 170 E Cabinets General:

Conform to the city of Los Angeles' Specification No. 54-053-08, *Traffic Signal Cabinet Assembly Specification* (dated July 2008), except as required herein.

Furnish model 332 base mounted cabinets configured for 8 vehicle phases, 4 pedestrian phases, and 6 overlaps. When overlaps are required, provide auxiliary output files for the overlaps. Do not reassign load switches to accommodate overlaps unless shown on electrical details.

Provide model 200 load switches, model 222 loop detector sensors, model 252 AC isolators, and model 242 DC isolators according to the electrical details. As a minimum, provide one (1) model 2018 conflict monitor, one (1) model 206L power supply unit, two (2) model 204 flashers, one (1) DC isolator (located in slot I14), and four (4) model 430 flash transfer relays (provide seven (7) model 430 flash transfer relays if auxiliary output file is installed) with each cabinet.

B. Type 170 E Cabinet Electrical Requirements:

Provide a cabinet assembly designed to ensure that upon leaving any cabinet switch or conflict monitor initiated flashing operation, the controller starts up in the programmed start up phases and start up interval.

Furnish two sets of non-fading cabinet wiring diagrams and schematics in a paper envelope or container and placed in the cabinet drawer.

All AC+ power is subject to radio frequency signal suppression.

Provide surge suppression in the cabinet for each type of cabinet device. Provide surge protection for the full capacity of the cabinet input file. Provide surge suppression devices that operate properly over a temperature range of -40° F to +185° F. Ensure the surge suppression devices provide both common and differential modes of protection.

Provide a pluggable power line surge protector that is installed on the back of the PDA (power distribution assembly) chassis to filter and absorb power line noise and switching transients. Ensure the device incorporates LEDs for failure indication and provides a dry relay contact closure for the purpose of remote sensing. Ensure the device meets the following specifications:

Peak Surge Current (Single pulse, 8x20µs).....20,000A
Occurrences (8x20µs waveform).....10 minimum @ 20,000A
Maximum Clamp Voltage.....395VAC
Operating Current.....15 amps
Response Time.....< 5 nanoseconds

Provide a loop surge suppressor for each set of loop terminals in the cabinet. Ensure the device meets the following specifications:

Peak Surge Current (6 times, 8x20µs)
(Differential Mode).....400A
(Common Mode).....1,000A
Occurrences (8x20µs waveform).....500 min @ 200A
Maximum Clamp Voltage
(Differential Mode @400A).....35V
(Common Mode @1,000A).....35V
Response Time.....< 5 nanoseconds
Maximum Capacitance.....35 pF

Provide a data communications surge suppressor for each communications line entering or leaving the cabinet. Ensure the device meets the following specifications:

Peak Surge Current (Single pulse, 8x20µs).....10,000A
Occurrences (8x20µs waveform).....100 min @ 2,000A
Maximum Clamp Voltage.....Rated for equipment protected
Response Time.....< 1 nanosecond
Maximum Capacitance.....1,500 pF
Maximum Series Resistance.....15Ω

Provide a DC signal surge suppressor for each DC input channel in the cabinet. Ensure the device meets the following specifications:

Peak Surge Current (Single pulse, 8x20µs).....10,000A
Occurrences (8x20µs waveform).....100 @ 2,000A
Maximum Clamp Voltage.....30V
Response Time.....< 1 nanosecond

Provide a 120 VAC signal surge suppressor for each AC+ interconnect signal input. Ensure the device meets the following specifications:

Peak Surge Current (Single pulse, 8x20µs).....20,000A
Maximum Clamp Voltage.....350VAC
Response Time.....< 200 nanoseconds
Discharge Voltage.....<200 Volts @ 1,000A
Insulation Resistance.....≥100 MΩ

Provide conductors for surge protection wiring that are of sufficient size (ampacity) to withstand maximum overcurrents which could occur before protective device thresholds are attained and current flow is interrupted.

If additional surge protected power outlets are needed to accommodate fiber transceivers, modems, etc., install a UL listed, industrial, heavy-duty type power outlet strip with a minimum rating of 15 A / 125 VAC, 60 Hz. Provide a strip that has a minimum of 3 grounded outlets. Ensure the power outlet strip plugs into one of the controller unit receptacles located on the rear of the PDA. Ensure power outlet strip is mounted securely; provide strain relief if necessary.

Provide a door switch in the front and a door switch in the rear of the cabinet that will provide the controller unit with a Door Ajar alarm when either the front or the rear door is open. Ensure the door switches apply DC ground to the Input File when either the front door or the rear door is open.

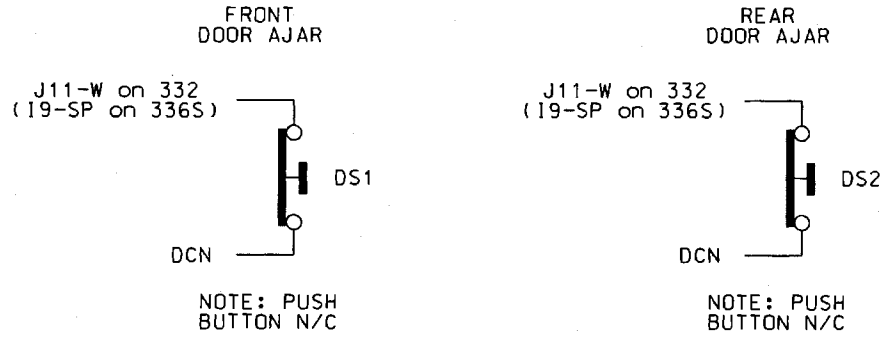

Furnish a fluorescent fixture in the rear across the top of the cabinet and another fluorescent fixture in the front across the top of the cabinet at a minimum. Ensure that the fixtures provide sufficient light to illuminate all terminals, labels, switches, and devices in the cabinet. Conveniently locate the fixtures so as not to interfere with a technician's ability to perform work on any devices or terminals in the cabinet. Provide a protective diffuser to cover exposed bulbs. Install 16 watt T-4

lamps in the fluorescent fixtures. Provide a door switch to provide power to each fixture when the respective door is open. Wire the fluorescent fixtures to the 15 amp ECB (equipment circuit breaker).

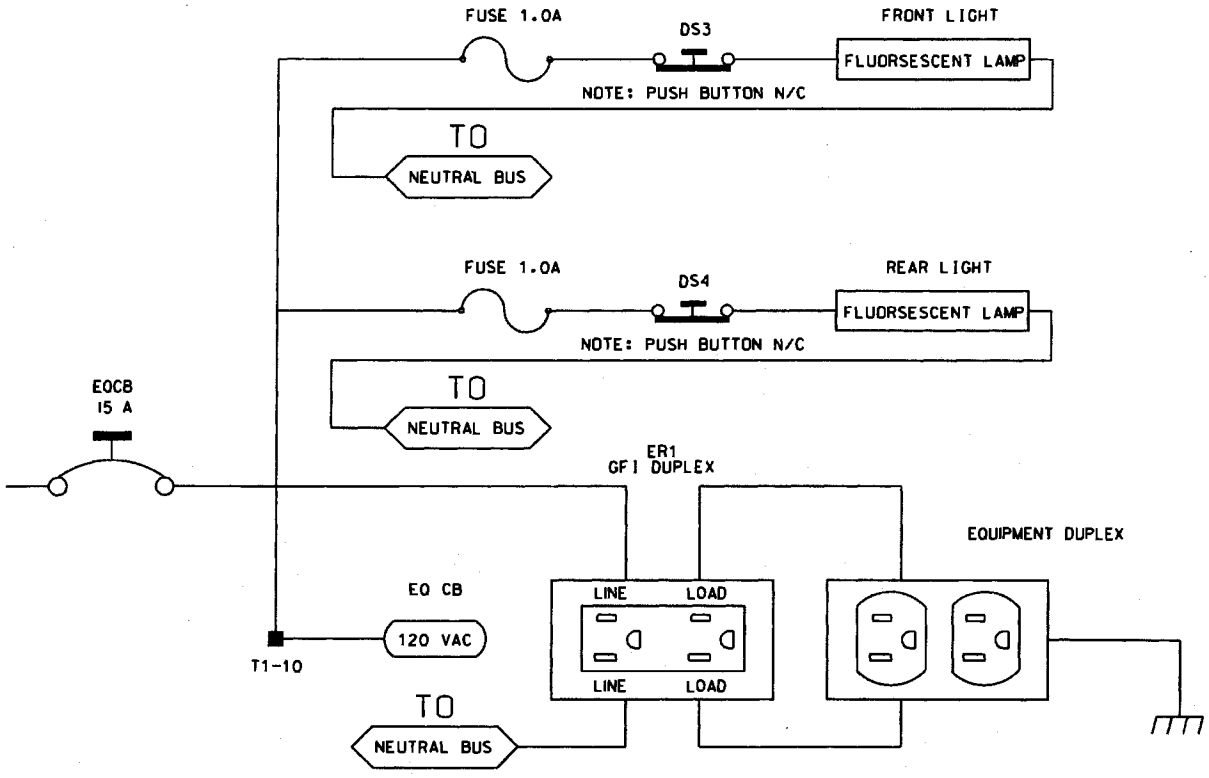

Furnish a police panel with a police panel door. Ensure that the police panel door permits access to the police panel when the main door is closed. Ensure that no rainwater can enter the cabinet even with the police panel door open. Provide a police panel door hinged on the right side as viewed from the front. Provide a police panel door lock that is keyed to a standard police/fire call box key. In addition to the requirements of LA Specification No. 54-053-08, provide the police panel with a toggle switch connected to switch the intersection operation between normal stop-and-go operation (AUTO) and manual operation (MANUAL). Ensure that manual control can be implemented using inputs and software such that the controller provides full programmed clearance times for the yellow clearance and red clearance for each phase while under manual control.

Provide a 1/4-inch locking phone jack in the police panel for a hand control to manually control the intersection. Provide sufficient room in the police panel for storage of a hand control and cord.

For model 332 base mounted cabinets, ensure terminals J14-E and J14-K are wired together on the rear of the Input File. Connect TB9-12 (J14 Common) on the Input Panel to T1-2 (AC-) on the rear of the PDA.

Provide detector test switches mounted at the top of the cabinet rack or other convenient location which may be used to place a call on each of eight phases based on the chart below. Provide three positions for each switch: On (place call), Off (normal detector operation), and Momentary On (place momentary call and return to normal detector operation after switch is released). Ensure that

the switches are located such that the technician can read the controller display and observe the intersection.

Connect detector test switches for cabinets as follows:

332 Cabinet	
Detector Call Switches	**Terminals**
Phase 1	I1-W
Phase 2	I4-W
Phase 3	I5-W
Phase 4	I8-W
Phase 5	J1-W
Phase 6	J4-W
Phase 7	J5-W
Phase 8	J8-W

Provide the PCB 28/56 connector for the conflict monitor unit (CMU) with 28 independent contacts per side, dual-sided with 0.156 inch contact centers. Provide the PCB 28/56 connector contacts with solder eyelet terminations. Ensure all connections to the PCB 28/56 connector are soldered to the solder eyelet terminations.

Ensure that all cabinets have the CMU connector wired according to the 332 cabinet connector pin assignments (include all wires for auxiliary output file connection). Wire pins 13, 16, R, and U of the CMU connector to a separate 4 pin plug, P1, as shown below. Provide a second plug, P2, which will mate with P1 and is wired to the auxiliary output file as shown below. Provide an additional plug, P3, which will mate with P1 and is wired to the pedestrian yellow circuits as shown below. When no auxiliary output file is installed in the cabinet, provide wires for the green and yellow inputs for channels 11, 12, 17, and 18, the red inputs for channels 17 and 18, and the wires for the P2 plug. Terminate the two-foot wires with ring type lugs, insulated, and bundled for optional use.

	P1		P2		P3	
PIN	**FUNCTION**	**CONN TO**	**FUNCTION**	**CONN TO**	**FUNCTION**	**CONN TO**
1	CH-9G	CMU-13	OLA-GRN	A123	2P-YEL	114
2	CH-9Y	CMU-16	OLA-YEL	A122	4P-YEL	105
3	CH-10G	CMU-R	OLB-GRN	A126	6P-YEL	120
4	CH-10Y	CMU-U	OLB-YEL	A125	8P-YEL	111

Connect the P20 terminal assembly (red monitor board) to a connector installed on the front of the type 2018 enhanced conflict monitor through a 3-1/2 foot 20-wire ribbon cable. Ensure that the ribbon cable connector and the connector on the conflict monitor are keyed to ensure proper connection. Ensure that removal of the P20 ribbon cable will cause the conflict monitor to recognize a latching fault condition and place the cabinet into flashing operation.

Wire the P20 connector to the traffic signal red displays to provide inputs to the conflict monitor as shown below. Ensure the pedestrian Don't Walk circuits are wired to channels 13 through 16 of the P20 connector. When no auxiliary output file is installed in the cabinet, provide wires for

channels 9 through 12 reds. Terminate the two-foot wires with ring type lugs, insulated, and bundled for optional use.

Pin #	Function	Pin #	Function
1	Channel 15 Red	11	Channel 9 Red
2	Channel 16 Red	12	Channel 8 Red
3	Channel 14 Red	13	Channel 7 Red
4	GND	14	Channel 6 Red
5	Channel 13 Red	15	Channel 5 Red
6	Special Function 2	16	Channel 4 Red
7	Channel 12 Red	17	Channel 3 Red
8	Special Function 1	18	Channel 2 Red
9	Channel 10 Red	19	Channel 1 Red
10	Channel 11 Red	20	Red Enable

Ensure the controller unit outputs to the auxiliary output file are pre-wired to the C5 connector. When no auxiliary output file is installed in the cabinet, connect the C5 connector to a storage socket located on the Input Panel or on the rear of the PDA.

In addition to the requirements of LA Specification No. 54-053-08, ensure relay K1 on the Power Distribution Assembly (PDA) is a four pole relay and K2 on the PDA is a two pole relay.

Provide a two pole, ganged circuit breaker for the flash bus circuit. Ensure the flash bus circuit breaker is an inverse time circuit breaker rated for 10 amps at 120 VAC with a minimum of 10,000 RMS symmetrical amperes short circuit current rating. Do not provide the auxiliary switch feature on the flash bus circuit breaker. Ensure the ganged flash bus circuit breaker is certified by the circuit breaker manufacturer to provide gang tripping operation.

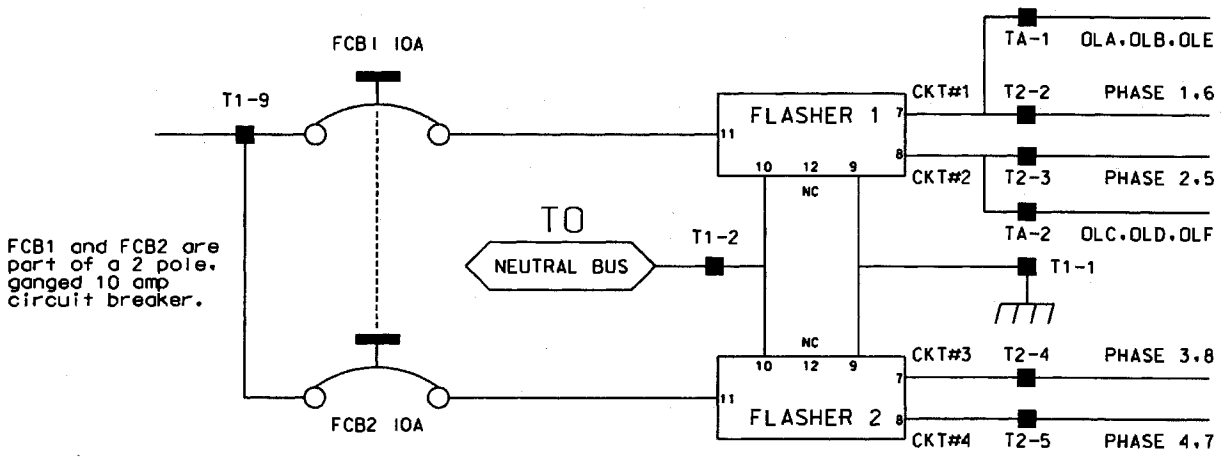

Ensure auxiliary output files are wired as follows:

AUXILIARY OUTPUT FILE TERMINAL BLOCK TA ASSIGNMENTS	
POSITION	**FUNCTION**
1	Flasher Unit #1, Circuit 1/FTR1 (OLA, OLB)/FTR3 (OLE)
2	Flasher Unit #1, Circuit 2/FTR2 (OLC, OLD)/FTR3 (OLF)
3	Flash Transfer Relay Coils
4	AC -
5	Power Circuit 5
6	Power Circuit 5
7	Equipment Ground Bus
8	NC

Provide four spare load resistors mounted in each cabinet. Ensure each load resistor is rated as shown in the table below. Wire one side of each load resistor to AC-. Connect the other side of each resistor to a separate terminal on a four (4) position terminal block. Mount the load resistors and terminal block either inside the back of Output File No. 1 or on the upper area of the Service Panel.

ACCEPTABLE LOAD RESISTOR VALUES	
VALUE (ohms)	**WATTAGE**
1.5K – 1.9 K	25W (min)
2.0K – 3.0K	10W (min)

Provide Model 200 load switches, Model 204 flashers, Model 242 DC isolators, Model 252 AC isolators, and Model 206L power supply units that conform to CALTRANS' "*Transportation Electrical Equipment Specifications*" dated March 12, 2009 with Erratum 1.

C. Type 170 E Cabinet Physical Requirements:

Do not mold, cast, or scribe the name "City of Los Angeles" on the outside of the cabinet door as specified in LA Specification No. 54-053-08. Do not provide a Communications Terminal Panel as specified in LA Specification No. 54-053-08. Do not provide terminal block TBB on the Service Panel. Do not provide Cabinet Verification Test Program software or associated test jigs as specified in LA Specification No. 54-053-08.

Furnish unpainted, natural, aluminum cabinet shells. Ensure that all non-aluminum hardware on the cabinet is stainless steel or a Department approved non-corrosive alternate.

Ensure the lifting eyes, gasket channels, police panel, and all supports welded to the enclosure and doors are fabricated from 0.125 inch minimum thickness aluminum sheet and meet the same standards as the cabinet and doors.

Provide front and rear doors with latching handles that allow padlocking in the closed position. Furnish 0.75 inch minimum diameter stainless steel handles with a minimum 0.5 inch shank. Place the padlocking attachment at 4.0 inches from the handle shank center to clear the lock and key. Provide an additional 4.0 inches minimum gripping length.

Provide Corbin #2 locks on the front and rear doors. Provide one (1) Corbin #2 and one (1) police master key with each cabinet. Ensure main door locks allow removal of keys in the locked position only.

Provide a surge protection panel with 16 loop surge protection devices and designed to allow sufficient free space for wire connection/disconnection and surge protection device replacement. For

model 332 cabinets, provide an additional 20 loop surge protection devices. Provide an additional two AC+ interconnect surge devices to protect one slot and eight DC surge protection devices to protect four slots. Provide no protection devices on slot I14.

For base mounted cabinets, mount surge protection panels on the left side of the cabinet as viewed from the rear. Attach each panel to the cabinet rack assembly using bolts and make it easily removable. Mount the surge protection devices in vertical rows on each panel and connect the devices to one side of 12 position, double row terminal blocks with #8 screws. For each surge protection panel, terminate all grounds from the surge protection devices on a copper equipment ground bus attached to the surge protection panel. Wire the terminals to the rear of a standard input file using spade lugs for input file protection.

Provide permanent labels that indicate the slot and the pins connected to each terminal that may be viewed from the rear cabinet door. Label and orient terminals so that each pair of inputs is next to each other. Indicate on the labeling the input file (I or J), the slot number (1-14) and the terminal pins of the input slots (either D & E for upper or J & K for lower).

Provide a minimum 14 x 16 inch pull out, hinged top shelf located immediately below controller mounting section of the cabinet. Ensure the shelf is designed to fully expose the table surface outside the controller at a height approximately even with the bottom of the controller. Ensure the shelf has a storage bin interior which is a minimum of 1 inch deep and approximately the same dimensions as the shelf. Provide an access to the storage area by lifting the hinged top of the shelf. Fabricate the shelf and slide from aluminum or stainless steel and ensure the assembly can support the 2070L controller plus 15 pounds of additional weight. Ensure shelf has a locking mechanism to secure it in the fully extended position and does not inhibit the removal of the 2070L controller or removal of cards inside the controller when fully extended. Provide a locking mechanism that is easily released when the shelf is to be returned to its non-use position directly under the controller.

D. Model 2018 Enhanced Conflict Monitor:

Furnish Model 2018 Enhanced Conflict Monitors that provide monitoring of 18 channels. Ensure each channel consists of a green, yellow, and red field signal input. Ensure that the conflict monitor meets or exceeds CALTRANS' Transportation Electrical Equipment Specifications dated March 12, 2009 with Erratum 1 (hereafter referred to as CALTRANS' 2009 TEES) for a model 210 monitor unit and other requirements stated in this specification.

Ensure the conflict monitor is provided with an 18 channel conflict programming card. Pin EE and Pin T of the conflict programming card shall be connected together. Pin 16 of the conflict programming card shall be floating. Ensure that the absence of the conflict programming card will cause the conflict monitor to trigger (enter into fault mode), and remain in the triggered state until the programming card is properly inserted and the conflict monitor is reset.

Provide a conflict monitor that incorporates LED indicators into the front panel to dynamically display the status of the monitor under normal conditions and to provide a comprehensive review of field inputs with monitor status under fault conditions. Ensure that the monitor indicates the channels that were active during a conflict condition and the channels that experienced a failure for all other per channel fault conditions detected. Ensure that these indications and the status of each channel are retained until the Conflict Monitor is reset. Furnish LED indicators for the following:

- AC Power (Green LED indicator)
- VDC Failed (Red LED indicator)
- WDT Error (Red LED indicator)

- Conflict (Red LED indicator)
- Red Fail (Red LED indicator)
- Dual Indication (Red LED indicator)
- Yellow/Clearance Failure (Red LED indicator)
- PCA/PC Ajar (Red LED indicator)
- Monitor Fail/Diagnostic Failure (Red LED indicator)
- 54 Channel Status Indicators (1 Red, 1 Yellow, and 1 Green LED indicator for each of the 18 channels)

Provide a switch to set the Red Fail fault timing. Ensure that when the switch is in the ON position the Red Fail fault timing value is set to 1350 +/- 150ms (2018 mode). Ensure that when the switch is in the OFF position the Red Fail fault timing value is set to 850 +/- 150ms (210 mode).

Provide a switch to set the Watchdog fault timing. Ensure that when the switch is in the ON position the Watchdog fault timing value is set to 1.0 +/- 0.1s (2018 mode). Ensure that when the switch is in the OFF position the Watchdog fault timing value is set to 1.5 +/- 0.1s (210 mode).

Provide a jumper or switch to set the AC line brown-out levels. Ensure that when the jumper is present or the switch is in the ON position the AC line dropout voltage threshold is 98 +/- 2 Vrms, the AC line restore voltage threshold is 103 +/- 2 Vrms, and the AC line brown-out timing value is set to 400 +/- 50ms (2018 mode). Ensure that when the jumper is not present or the switch is in the OFF position the AC line dropout voltage threshold is 92 +/- 2 Vrms, the AC line restore voltage threshold is 98 +/- 2 Vrms, and the AC line brown-out timing value is set to 80 +/- 17ms (210 mode).

Provide a jumper or switch that will enable and disable the Watchdog Latch function. Ensure that when the jumper is not present or the switch is in the OFF position the Watchdog Latch function is disabled. In this mode of operation, a Watchdog fault will be reset following a power loss, brownout, or power interruption. Ensure that when the jumper is present or the switch is in the ON position the Watchdog Latch function is enabled. In this mode of operation, a Watchdog fault will be retained until a Reset command is issued.

Provide a jumper that will reverse the active polarity for pin #EE (output relay common). Ensure that when the jumper is not present pin #EE (output relay common) will be considered 'Active' at a voltage greater than 70 Vrms and 'Not Active' at a voltage less than 50 Vrms (Caltrans mode). Ensure that when the jumper is present pin #EE (output relay common) will be considered 'Active' at a voltage less than 50 Vrms and 'Not Active' at a voltage greater than 70 Vrms (Failsafe mode).

In addition to the connectors required by CALTRANS' 2009 TEES, provide the conflict monitor with a red interface connector mounted on the front of the monitor. Ensure the connector is a 20 pin, right angle, male connector with latching clip locks and polarizing keys. Ensure the right angle solder tails are designed for a 0.062" thick printed circuit board. Keying of the connector shall be between pins 3 and 5, and between 17 and 19. Ensure the connector has two rows of pins with the odd numbered pins on one row and the even pins on the other row. Ensure the connector pin row spacing is 0.10" and pitch is 0.10". Ensure the mating length of the connector pins is 0.24". Ensure the pins are finished with gold plating 30μ" thick.

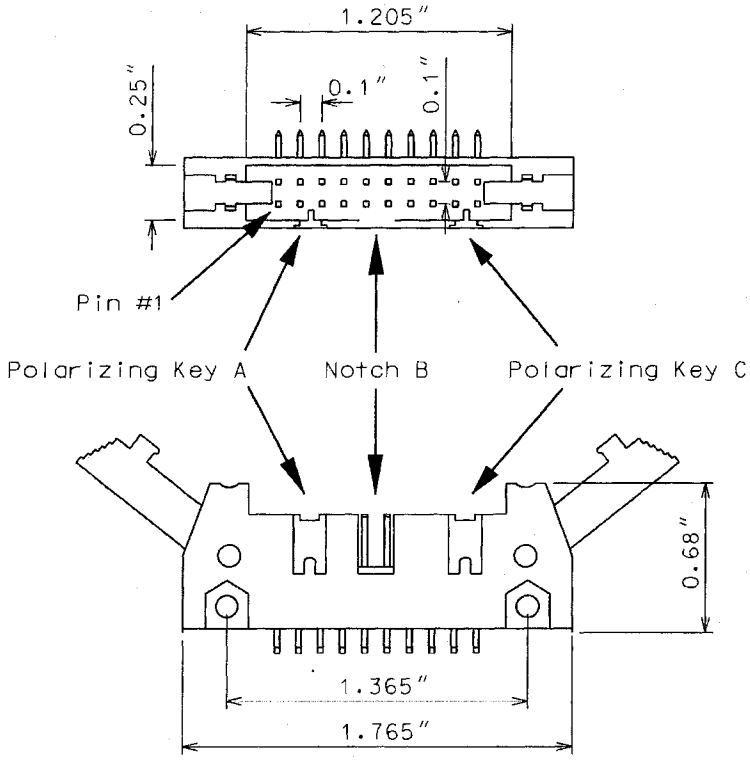

Ensure the red interface connector pins on the monitor have the following functions:

Pin #	Function	Pin #	Function
1	Channel 15 Red	2	Channel 16 Red
3	Channel 14 Red	4	Chassis Ground
5	Channel 13 Red	6	Special Function 2
7	Channel 12 Red	8	Special Function 1
9	Channel 10 Red	10	Channel 11 Red
11	Channel 9 Red	12	Channel 8 Red
13	Channel 7 Red	14	Channel 6 Red
15	Channel 5 Red	16	Channel 4 Red
17	Channel 3 Red	18	Channel 2 Red
19	Channel 1 Red	20	Red Enable

Ensure that the removal of the P-20 red interface ribbon cable will cause the monitor to recognize a latching fault condition and place the cabinet into flashing operation.

Provide Special Function 1 and Special Function 2 inputs to the unit which shall disable only Red Fail Monitoring when either input is sensed active. A Special Function input shall be sensed active when the input voltage exceeds 70 Vrms with a minimum duration of 550 ms. A Special Function input shall be sensed not active when the input voltage is less than 50 Vrms or the duration is less than 250 ms. A Special Function input is undefined by these specifications and may or may not be sensed active when the input voltage is between 50 Vrms and 70 Vrms or the duration is between 250 ms and 550 ms.

Ensure the conflict monitor recognizes field signal inputs for each channel that meet the following requirements:

- consider a Red input greater than 70 Vrms and with a duration of at least 500 ms as an "on" condition;
- consider a Red input less than 50 Vrms or with a duration of less than 200 ms as an "off" condition (no valid signal);
- consider a Red input between 50 Vrms and 70 Vrms or with a duration between 200 ms and 500 ms to be undefined by these specifications;
- consider a Green or Yellow input greater than 25 Vrms and with a duration of at least 500 ms as an "on" condition;
- consider a Green or Yellow input less than 15 Vrms or with a duration of less than 200 ms as an "off" condition; and
- consider a Green or Yellow input between 15 Vrms and 25 Vrms or with a duration between 200 ms and 500 ms to be undefined by these specifications.

Provide a conflict monitor that recognizes the faults specified by CALTRANS' 2009 TEES and the following additional faults. Ensure the conflict monitor will trigger upon detection of a fault and will remain in the triggered (in fault mode) state until the unit is reset at the front panel or through the external remote reset input for the following failures:

1. **Red Monitoring or Absence of Any Indication (Red Failure):** A condition in which no "on" voltage signal is detected on any of the green, yellow, or red inputs to a given monitor channel. If a signal is not detected on at least one input (R, Y, or G) of a conflict monitor channel for a period greater than 1000 ms when used with a 170 controller and 1500 ms when used with a 2070L controller, ensure monitor will trigger and put the intersection into flash. If the absence of any indication condition lasts less that 750 ms when used with a 170 controller and 1200 ms when used with a 2070L controller, ensure conflict monitor will not trigger. Red fail monitoring shall be enabled on a per channel basis by the use of switches located on the conflict monitor. Have red monitoring occur when all of the following input conditions are in effect:

   a) Red Enable input to monitor is active (Red Enable voltages are "on" at greater than 70 Vrms, off at less than 50 Vrms, undefined between 50 and 70 Vrms), and

   b) Neither Special Function 1 nor Special Function 2 inputs are active.

   c) Pin #EE (output relay common) is not active

2. **Short/Missing Yellow Indication Fault (Clearance Error):** Yellow indication following a green is missing or shorter than 2.7 seconds (with ± 0.1-second accuracy). If a channel fails to detect an "on" signal at the Yellow input for a minimum of 2.7 seconds (± 0.1 second) following the detection of an "on" signal at a Green input for that channel, ensure that the monitor triggers and generates a clearance/short yellow error fault indication. Short/missing yellow (clearance) monitoring shall be enabled on a per channel basis by the use of switches located on the conflict monitor. This fault shall not occur when the channel is programmed for Yellow Inhibit, when the Red Enable signal is inactive or pin #EE (output relay common) is active.

3. **Dual Indications on the Same Channel:** In this condition, more than one indication (R,Y,G) is detected as "on" at the same time on the same channel. If dual indications are detected for a period greater than 500 ms, ensure that the conflict monitor triggers and displays the proper failure indication (Dual Ind fault). If this condition is detected for less

than 200 ms, ensure that the monitor does not trigger. G-Y-R dual indication monitoring shall be enabled on a per channel basis by the use of switches located on the conflict monitor. G-Y dual indication monitoring shall be enabled for all channels by use of a switch located on the conflict monitor. This fault shall not occur when the Red Enable signal is inactive or pin #EE (output relay common) is active.

4. **Configuration Settings Change:** The configuration settings are comprised of (as a minimum) the permissive diode matrix, dual indication switches, yellow disable jumpers, any option switches, any option jumpers, and the Watchdog Enable switch. Ensure the conflict monitor compares the current configuration settings with the previous stored configuration settings on power-up, on reset, and periodically during operation. If any of the configuration settings are changed, ensure that the conflict monitor triggers and causes the program card indicator to flash. Ensure that configuration change faults are only reset by depressing and holding the front panel reset button for a minimum of three seconds. Ensure the external remote reset input does not reset configuration change faults.

Ensure the conflict monitor will trigger and the AC Power indicator will flash at a rate of 2 Hz ± 20% with a 50% duty cycle when the AC Line voltage falls below the "drop-out" level. Ensure the conflict monitor will resume normal operation when the AC Line voltage returns above the "restore" level. Ensure the AC Power indicator will remain illuminated when the AC voltage returns above the "restore" level. Should an AC Line power interruption occur while the monitor is in the fault mode, then upon restoration of AC Line power, the monitor will remain in the fault mode and the correct fault and channel indicators will be displayed.

Provide a flash interval of at least 6 seconds and at most 10 seconds in duration following a power-up, an AC Line interruption, or a brownout restore. Ensure the conflict monitor will suspend all fault monitoring functions, close the Output relay contacts, and flash the AC indicator at a rate of 4 Hz ± 20% with a 50% duty cycle during this interval. Ensure the termination of the flash interval after at least 6 seconds if the Watchdog input has made 5 transitions between the True and False state and the AC Line voltage is greater than the "restore" level. If the watchdog input has not made 5 transitions between the True and False state within 10 ± 0.5 seconds, the monitor shall enter a WDT error fault condition.

Ensure the conflict monitor will monitor an intersection with a minimum of four approaches using the four-section Flashing Yellow Arrow (FYA) vehicle traffic signal as outlined by the NCHRP 3-54 research project for protected-permissive left turn signal displays. Ensure the conflict monitor will operate in the FYA mode and FYAc (Compact) mode as specified below to monitor each channel for the following fault conditions: Conflict, Red Fail, Dual Indication, and Clearance. Provide a switch to select between the FYA mode and FYAc mode. Provide a switch to select each FYA phase movement for monitoring.

FYA mode

FYA Signal Head	Phase 1	Phase 3	Phase 5	Phase 7
Red Arrow	Channel 9 Red	Channel 10 Red	Channel 11 Red	Channel 12 Red
Yellow Arrow	Channel 9 Yellow	Channel 10 Yellow	Channel 11 Yellow	Channel 12 Yellow
Flashing Yellow Arrow	Channel 9 Green	Channel 10 Green	Channel 11 Green	Channel 12 Green
Green Arrow	Channel 1 Green	Channel 3 Green	Channel 5 Green	Channel 7 Green

FYAc mode

FYA Signal Head	Phase 1	Phase 3	Phase 5	Phase 7
Red Arrow	Channel 1 Red	Channel 3 Red	Channel 5 Red	Channel 7 Red
Yellow Arrow	Channel 1 Yellow	Channel 3 Yellow	Channel 5 Yellow	Channel 7 Yellow
Flashing Yellow Arrow	Channel 1 Green	Channel 3 Green	Channel 5 Green	Channel 7 Green
Green Arrow	Channel 9 Green	Channel 9 Yellow	Channel 10 Green	Channel 10 Yellow

Ensure that the conflict monitor will log at least nine of the most recent events detected by the monitor in non-volatile EEPROM memory (or equivalent). For each event, record at a minimum the time, date, type of event, status of each field signal indication with RMS voltage, and specific channels involved with the event. Ensure the conflict monitor will log the following events: monitor reset, configuration, previous fault, and AC line. Furnish the signal sequence log that shows all channel states (Greens, Yellows, and Reds) and the Red Enable State for a minimum of 2 seconds prior to the current fault trigger point. Ensure the display resolution of the inputs for the signal sequence log is not greater than 50 ms.

Provide a RS-232C/D compliant port (DB-9 female connector) on the front panel of the conflict monitor in order to provide communications from the conflict monitor to the 170/2070L controller or to a Department-furnished laptop computer. Electrically isolate the port interface electronics from all monitor electronics, excluding Chassis Ground. Ensure that the controller can receive all event log information through a controller Asynchronous Communications Interface Adapter (Type 170E) or Async Serial Comm Module (2070L). Provide a Windows based graphic user interface software to communicate directly through the same monitor RS-232C/D compliant port to retrieve and view all event log information to a Department-furnished laptop computer. The RS-232C/D compliant port on the monitor shall allow the monitor to function as a DCE device with pin connections as follows:

Conflict Monitor RS-232C/D (DB-9 Female) Pinout		
Pin Number	**Function**	**I/O**
1	DCD	O
2	TX Data	O
3	RX Data	I
4	DTR	I
5	Ground	-
6	DSR	O
7	CTS	I
8	RTS	O
9	NC	-

MONITOR BOARD EDGE CONNECTOR

Pin #	Function (Back Side)	Pin #	Function (Component Side)
1	Channel 2 Green	A	Channel 2 Yellow
2	Channel 13 Green	B	Channel 6 Green
3	Channel 6 Yellow	C	Channel 15 Green
4	Channel 4 Green	D	Channel 4 Yellow
5	Channel 14 Green	E	Channel 8 Green
6	Channel 8 Yellow	F	Channel 16 Green
7	Channel 5 Green	H	Channel 5 Yellow
8	Channel 13 Yellow	J	Channel 1 Green
9	Channel 1 Yellow	K	Channel 15 Yellow
10	Channel 7 Green	L	Channel 7 Yellow
11	Channel 14 Yellow	M	Channel 3 Green
12	Channel 3 Yellow	N	Channel 16 Yellow
13	Channel 9 Green	P	Channel 17 Yellow
14	Channel 17 Green	R	Channel 10 Green
15	Channel 11 Yellow	S	Channel 11 Green
16	Channel 9 Yellow	T	Channel 18 Yellow
17	Channel 18 Green	U	Channel 10 Yellow
--		--	
18	Channel 12 Yellow	V	Channel 12 Green
19	Channel 17 Red	W	Channel 18 Red
20	Chassis Ground	X	Not Assigned
21	AC-	Y	DC Common
22	Watchdog Timer	Z	External Test Reset
23	+24VDC	AA	+24VDC
24	Tied to Pin 25	BB	Stop Time (Output)
25	Tied to Pin 24	CC	Not Assigned
26	Not Assigned	DD	Not Assigned
27	Relay Output, Side #3, N.O.	EE	Relay Output,Side #2,Common
28	Relay Output, Side #1, N.C.	FF	AC+

-- Slotted for keying between Pins 17/U and 18/V

CONFLICT PROGRAM CARD PIN ASSIGNMENTS

Pin #	Function (Back Side)	Pin #	Function (Component Side)
1	Channel 2 Green	A	Channel 1 Green
2	Channel 3 Green	B	Channel 2 Green
3	Channel 4 Green	C	Channel 3 Green
4	Channel 5 Green	D	Channel 4 Green
5	Channel 6 Green	E	Channel 5 Green
6	Channel 7 Green	F	Channel 6 Green
7	Channel 8 Green	H	Channel 7 Green
8	Channel 9 Green	J	Channel 8 Green
9	Channel 10 Green	K	Channel 9 Green
10	Channel 11 Green	L	Channel 10 Green
11	Channel 12 Green	M	Channel 11 Green
12	Channel 13 Green	N	Channel 12 Green
13	Channel 14 Green	P	Channel 13 Green
14	Channel 15 Green	R	Channel 14 Green
15	Channel 16 Green	S	Channel 15 Green
16	N/C	T	PC AJAR
17	Channel 1 Yellow	U	Channel 9 Yellow
18	Channel 2 Yellow	V	Channel 10 Yellow
19	Channel 3 Yellow	W	Channel 11 Yellow
20	Channel 4 Yellow	X	Channel 12 Yellow
21	Channel 5 Yellow	Y	Channel 13 Yellow
22	Channel 6 Yellow	Z	Channel 14 Yellow
23	Channel 7 Yellow	AA	Channel 15 Yellow
24	Channel 8 Yellow	BB	Channel 16 Yellow
--		--	
25	Channel 17 Green	CC	Channel 17 Yellow
26	Channel 18 Green	DD	Channel 18 Yellow
27	Channel 16 Green	EE	PC AJAR (Program Card)
28	Yellow Inhibit Common	FF	Channel 17 Green

-- Slotted for keying between Pins 24/BB and 25/CC

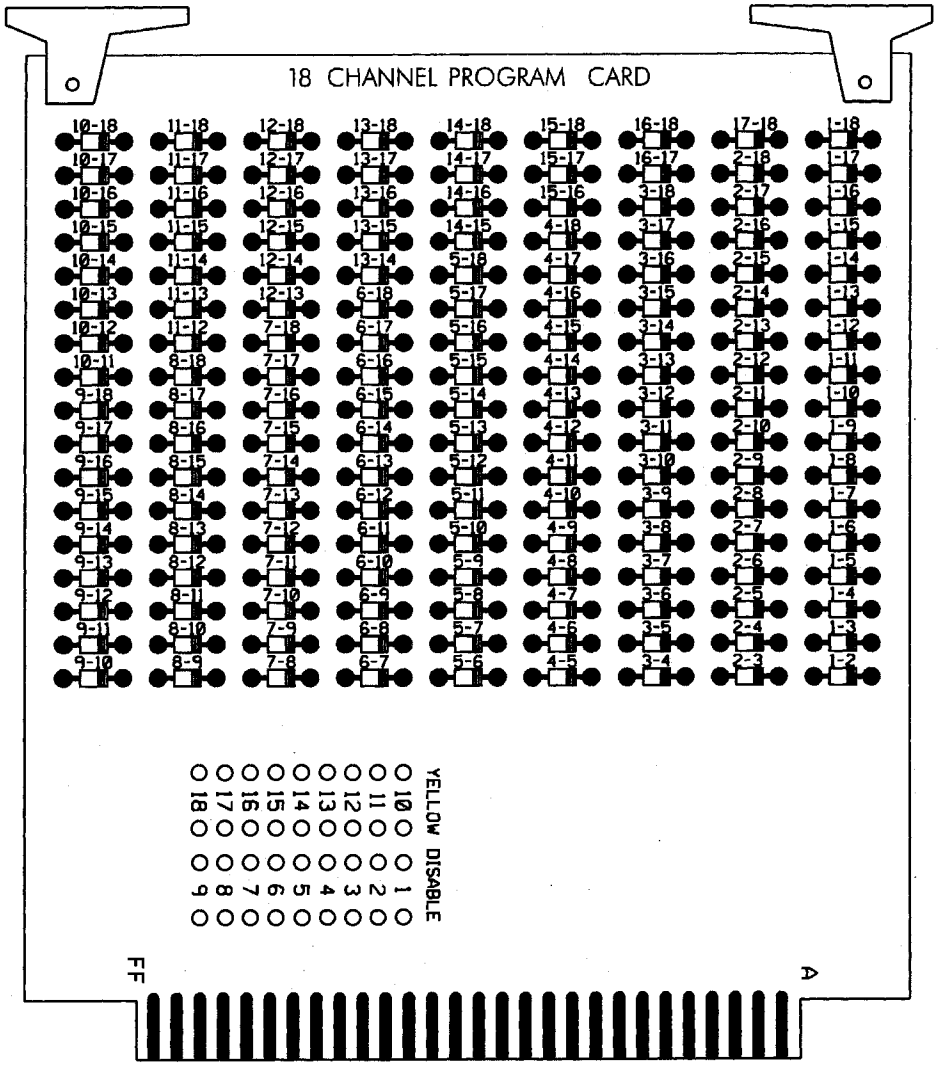

2.4. MATERIALS – TYPE 170 DETECTOR SENSOR UNITS

Furnish detector sensor units that comply with Chapter 5 Section 1, "General Requirements," and Chapter 5 Section 2, "Model 222 & 224 Loop Detector Sensor Unit Requirements," of the CALTRANS "Transportation Electrical Equipment Specifications" dated March 12, 2009 with Erratum 1.

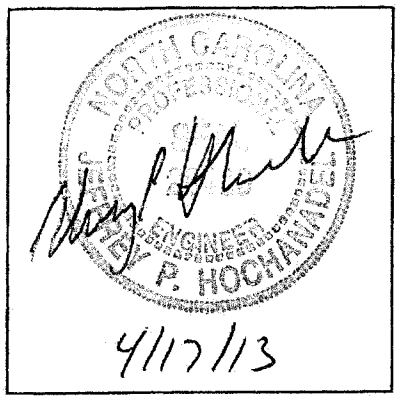

Project Special Provisions

(Version 12.1)

Signals and Intelligent Transportation Systems

Prepared By: SEPI Engineering & Construction
15-Apr-13

Contents

1. SIGNAL HEADS 2
1.1. MATERIALS 2
A. General: 2
B. Vehicle Signal Heads: 3
C. Signal Cable: 5
2. CONTROLLERS WITH CABINETS 5
2.1. MATERIALS – TYPE 2070L CONTROLLERS 5
2.2. MATERIALS – GENERAL CABINETS 5
2.3. MATERIALS – TYPE 170E CABINETS 6
A. Type 170 E Cabinets General: 6
B. Type 170 E Cabinet Electrical Requirements: 6
C. Type 170 E Cabinet Physical Requirements: 12
D. Model 2018 Enhanced Conflict Monitor: 13
2.4. MATERIALS – TYPE 170 DETECTOR SENSOR UNITS 21

1. SIGNAL HEADS

1.1. MATERIALS

A. General:

Fabricate vehicle signal head housings and end caps from die-cast aluminum. Provide visor mounting screws, door latches, and hinge pins fabricated from stainless steel. Provide interior screws, fasteners, and metal parts fabricated from stainless steel or corrosion resistant material.

Fabricate tunnel and traditional visors from sheet aluminum.

Paint all surfaces inside and outside of signal housings and doors. Paint outside surfaces of tunnel and traditional visors, messenger cable mounting assemblies, pole and pedestal mounting assemblies, and pedestrian pushbutton housings. Have electrostatically-applied, fused-polyester paint in highway yellow (Federal Standard 595C, Color Chip Number 13538) a minimum of 2.5 to 3.5 mils thick. Do not apply paint to the latching hardware or rigid vehicle signal head mounting brackets for mast-arm attachments.

Have the interior surfaces of tunnel and traditional visors painted an alkyd urea black synthetic baking enamel with a minimum gloss reflectance and meeting the requirements of MIL-E-10169, "Enamel Heat Resisting, Instrument Black."

For light emitting diode (LED) traffic signal modules, provide the following requirements for inclusion on the Department's Qualified Products List for traffic signal equipment.

1. Sample submittal,
2. Third-party independent laboratory testing results for each submitted module with evidence of testing and conformance with all of the Design Qualification Testing specified in section 6.4 of each of the following Institute of Transportation Engineers (ITE) specifications:
   - Vehicle Traffic Control Signal Heads – Light Emitting Diode (LED) Circular Signal Supplement
   - Vehicle Traffic Control Signal Heads – Light Emitting Diode (LED) Vehicle Arrow Traffic Signal Supplement
   - Pedestrian Traffic Control Signal Indications –Light Emitting Diode (LED) Signal Modules.

   (Note: The Department currently recognizes two approved independent testing laboratories. They are Intertek ETL Semko and Light Metrics, Incorporated with Garwood Laboratories. Independent laboratory tests from other laboratories may be considered as part of the QPL submittal at the discretion of the Department,
3. Evidence of conformance with the requirements of these specifications,
4. A manufacturer's warranty statement in accordance with the required warranty, and
5. Submittal of manufacturer's design and production documentation for the model, including but not limited to, electrical schematics, electronic component values, proprietary part numbers, bill of materials, and production electrical and photometric test parameters.
6. Evidence of approval of the product to bear the Intertek ETL Verified product label for LED traffic signal modules.

In addition to meeting the performance requirements for the minimum period of 60 months, provide a written warranty against defects in materials and workmanship for the modules for a period of 60 months after installation of the modules. During the warranty period, the manufacturer

must provide new replacement modules within 45 days of receipt of modules that have failed at no cost to the State. Repaired or refurbished modules may not be used to fulfill the manufacturer's warranty obligations. Provide manufacturer's warranty documentation to the Department during evaluation of product for inclusion on Qualified Products List (QPL).

B. Vehicle Signal Heads:

Comply with the ITE standard "Vehicle Traffic Control Signal Heads". Provide housings with provisions for attaching backplates.

Provide visors that are 10 inches in length for 12-inch vehicle signal heads.

Provide a termination block with one empty terminal for field wiring for each indication plus one empty terminal for the neutral conductor. Have all signal sections wired to the termination block. Provide barriers between the terminals that have terminal screws with a minimum Number 8 thread size and that will accommodate and secure spade lugs sized for a Number 10 terminal screw.

Mount termination blocks in the yellow signal head sections on all in-line vehicle signal heads. Mount the termination block in the red section on five-section vehicle signal heads.

Furnish vehicle signal head interconnecting brackets. Provide one-piece aluminum brackets less than 4.5 inches in height and with no threaded pipe connections. Provide hand holes on the bottom of the brackets to aid in installing wires to the signal heads. Lower brackets that carry no wires and are used only for connecting the bottom signal sections together may be flat in construction.

For messenger cable mounting, provide messenger cable hangers, wire outlet bodies, balance adjusters, bottom caps, wire entrance fitting brackets, and all other hardware necessary to make complete, watertight connections of the vehicle signal heads to the messenger cable. Fabricate mounting assemblies from malleable iron or steel and provide serrated rings made of aluminum. Provide messenger cable hangers and balance adjusters that are galvanized before being painted. Fabricate balance adjuster eyebolt and eyebolt nut from stainless steel or galvanized malleable iron. Provide messenger cable hangers with U-bolt clamps. Fabricate washers, screws, bolts, clevis pins, cotter pins, nuts, and U-bolt clamps from stainless steel.

Provide LED vehicular traffic signal modules (hereafter referred to as modules) that consist of an assembly that uses LEDs as the light source in lieu of an incandescent lamp for use in traffic signal sections. Use LEDs that are aluminum indium gallium phosphorus (AlInGaP) technology for red and yellow indications and indium gallium nitride (InGaN) for green indications. Install the ultra bright type LEDs that are rated for 100,000 hours of continuous operation from -40°F to +165°F. Design modules to have a minimum useful life of 60 months and to meet all parameters of this specification during this period of useful life.

For the modules, provide spade terminals crimped to the lead wires and sized for a #10 screw connection to the existing terminal block in a standard signal head. Do not provide other types of crimped terminals with a spade adapter.

Ensure the power supply is integral to the module assembly. On the back of the module, permanently mark the date of manufacture (month & year) or some other method of identifying date of manufacture.

Tint the red, yellow and green lenses to correspond with the wavelength (chromaticity) of the LED. Transparent tinting films are unacceptable. Provide a lens that is integral to the unit with a smooth outer surface.

1. LED Circular Signal Modules:

Provide modules in the following configurations: 12-inch circular sections. All makes and models of LED modules purchased for use on the State Highway System shall appear on the current NCDOT Traffic Signal Qualified Products List (QPL).

Provide the manufacturer's model number and the product number (assigned by the Department) for each module that appears on the 2012 or most recent Qualified Products List. In addition, provide manufacturer's certification in accordance with Article 106-3 of the *Standard Specifications,* that each module meets or exceeds the ITE "Vehicle Traffic Control Signal Heads – Light Emitting Diode (LED) Circular Signal Supplement" dated June 27, 2005 (hereafter referred to as VTCSH Circular Supplement) and other requirements stated in this specification.

Provide modules that meet the following requirements when tested under the procedures outlined in the VTCSH Circular Supplement:

Module Type	Max. Wattage at 165° F	Nominal Wattage at 77° F
12-inch red circular	17	11
12-inch green circular	15	15

For yellow circular signal modules, provide modules tested under the procedures outlined in the VTCSH Circular Supplement to insure power required at 77° F is 22 Watts or less for the 12-inch circular module and 13 Watts.

Note: Use a wattmeter having an accuracy of ±1% to measure the nominal wattage and maximum wattage of a circular traffic signal module. Power may also be derived from voltage, current and power factor measurements.

2. LED Arrow Signal Modules

Provide 12-inch omnidirectional arrow signal modules. All makes and models of LED modules purchased for use on the State Highway System shall appear on the current NCDOT Traffic Signal Qualified Products List (QPL).

Provide the manufacturer's model number and the product number (assigned by the Department) for each module that appears on the 2012 or most recent Qualified Products List. In addition, provide manufacturer's certification in accordance with Article 106-3 of the *Standard Specifications,* that each module meets or exceeds the requirements for 12-inch omnidirectional modules specified in the ITE "Vehicle Traffic Control Signal Heads – Light Emitting Diode (LED) Vehicle Arrow Traffic Signal Supplement" dated July 1, 2007 (hereafter referred to as VTCSH Arrow Supplement) and other requirements stated in this specification.

Provide modules that meet the following requirements when tested under the procedures outlined in the VTCSH Arrow Supplement:

Module Type	Max. Wattage at 165° F	Nominal Wattage at 77° F
12-inch red arrow	12	9
12-inch green arrow	11	11

For yellow arrow signal modules, provide modules tested under the procedures outlined in the VTCSH Arrow Supplement to insure power required at 77° F is 12 Watts or less.

Note: Use a wattmeter having an accuracy of ±1% to measure the nominal wattage and maximum wattage of an arrow traffic signal module. Power may also be derived from voltage, current and power factor measurements.

C. Signal Cable:

Furnish 16-4 and 16-7 signal cable that complies with IMSA specification 20-1 except provide the following conductor insulation colors:

- For 16-4 cable: white, yellow, red, and green
- For 16-7 cable: white, yellow, red, green, yellow with black stripe tracer, red with black stripe tracer, and green with black stripe tracer. Apply continuous stripe tracer on conductor insulation with a longitudinal or spiral pattern.

Provide a ripcord to allow the cable jacket to be opened without using a cutter. IMSA specification 19-1 will not be acceptable. Provide a cable jacket labeled with the IMSA specification number and provide conductors constructed of stranded copper.

2. CONTROLLERS WITH CABINETS

2.1. MATERIALS – TYPE 2070L CONTROLLERS

Conform to CALTRANS *Transportation Electrical Equipment Specifications* (TEES) (dated August 16, 2002, plus Errata 1 dated October 27, 2003 and Errata 2 dated June 08, 2004) except as required herein.

Furnish Model 2070L controllers. Ensure that removal of the CPU module from the controller will place the intersection into flash.

The Department will provide software at the beginning of the burning-in period. Contractor shall give 5 working days notice before needing software. Program software provided by the Department.

Provide model 2070L controllers with the latest version of OS9 operating software and device drivers, composed of the unit chassis and at a minimum the following modules and assemblies:

- MODEL 2070 1B, CPU Module, Single Board
- MODEL 2070-2A, Field I/O Module (FI/O)
- MODEL 2070-3B, Front Panel Module (FP), Display B (8x40)
- MODEL 2070-4A, Power Supply Module, 10 AMP
- MODEL 2070-7A, Async Serial Com Module (9-pin RS-232)

Furnish one additional MODEL 2070-7A, Async Serial Com Module (9-pin RS-232) for all master controller locations.

For each master location and central control center, furnish a U.S. Robotics V.92 or approved equivalent auto-dial/auto-answer external modem to accomplish the interface to the Department-furnished microcomputers. Include all necessary hardware to ensure telecommunications.

2.2. MATERIALS – GENERAL CABINETS

Provide a moisture resistant coating on all circuit boards.

Provide one 20 mm diameter radial lead UL-recognized metal oxide varistor (MOV) between each load switch field terminal and equipment ground. Electrical performance is outlined below.

PROPERTIES OF MOV SURGE PROTECTOR	
Maximum Continuous Applied Voltage at 185° F	150 VAC (RMS) 200 VDC
Maximum Peak 8x20µs Current at 185° F	6500 A
Maximum Energy Rating at 185° F	80 J
Voltage Range 1 mA DC Test at 77° F	212-268 V
Max. Clamping Voltage 8x20µs, 100A at 77° F	395 V
Typical Capacitance (1 MHz) at 77° F	1600 pF

Provide a power line surge protector that is a two-stage device that will allow connection of the radio frequency interference filter between the stages of the device. Ensure that a maximum continuous current is at least 10A at 120V. Ensure that the device can withstand a minimum of 20 peak surge current occurrences at 20,000A for an 8x20 microsecond waveform. Provide a maximum clamp voltage of 395V at 20,000A with a nominal series inductance of 200µh. Ensure that the voltage does not exceed 395V. Provide devices that comply with the following:

Frequency (Hz)	Minimum Insertion Loss (dB)
60	0
10,000	30
50,000	55
100,000	50
500,000	50
2,000,000	60
5,000,000	40
10,000,000	20
20,000,000	25

2.3. MATERIALS – TYPE 170E CABINETS

A. Type 170 E Cabinets General:

Conform to the city of Los Angeles' Specification No. 54-053-08, *Traffic Signal Cabinet Assembly Specification* (dated July 2008), except as required herein.

Furnish model 332 base mounted cabinets configured for 8 vehicle phases, 4 pedestrian phases, and 6 overlaps. When overlaps are required, provide auxiliary output files for the overlaps. Do not reassign load switches to accommodate overlaps unless shown on electrical details.

Provide model 200 load switches, model 222 loop detector sensors, model 252 AC isolators, and model 242 DC isolators according to the electrical details. As a minimum, provide one (1) model 2018 conflict monitor, one (1) model 206L power supply unit, two (2) model 204 flashers, one (1) DC isolator (located in slot I14), and four (4) model 430 flash transfer relays (provide seven (7) model 430 flash transfer relays if auxiliary output file is installed) with each cabinet.

B. Type 170 E Cabinet Electrical Requirements:

Provide a cabinet assembly designed to ensure that upon leaving any cabinet switch or conflict monitor initiated flashing operation, the controller starts up in the programmed start up phases and start up interval.

Furnish two sets of non-fading cabinet wiring diagrams and schematics in a paper envelope or container and placed in the cabinet drawer.

All AC+ power is subject to radio frequency signal suppression.

Provide surge suppression in the cabinet for each type of cabinet device. Provide surge protection for the full capacity of the cabinet input file. Provide surge suppression devices that operate properly over a temperature range of -40° F to +185° F. Ensure the surge suppression devices provide both common and differential modes of protection.

Provide a pluggable power line surge protector that is installed on the back of the PDA (power distribution assembly) chassis to filter and absorb power line noise and switching transients. Ensure the device incorporates LEDs for failure indication and provides a dry relay contact closure for the purpose of remote sensing. Ensure the device meets the following specifications:

Peak Surge Current (Single pulse, 8x20µs).....20,000A
Occurrences (8x20µs waveform).....10 minimum @ 20,000A
Maximum Clamp Voltage.....395VAC
Operating Current.....15 amps
Response Time.....< 5 nanoseconds

Provide a loop surge suppressor for each set of loop terminals in the cabinet. Ensure the device meets the following specifications:

Peak Surge Current (6 times, 8x20µs)
(Differential Mode).....400A
(Common Mode).....1,000A
Occurrences (8x20µs waveform).....500 min @ 200A
Maximum Clamp Voltage
(Differential Mode @400A).....35V
(Common Mode @1,000A).....35V
Response Time.....< 5 nanoseconds
Maximum Capacitance.....35 pF

Provide a data communications surge suppressor for each communications line entering or leaving the cabinet. Ensure the device meets the following specifications:

Peak Surge Current (Single pulse, 8x20µs).....10,000A
Occurrences (8x20µs waveform).....100 min @ 2,000A
Maximum Clamp Voltage.....Rated for equipment protected
Response Time.....< 1 nanosecond
Maximum Capacitance.....1,500 pF
Maximum Series Resistance.....15Ω

Provide a DC signal surge suppressor for each DC input channel in the cabinet. Ensure the device meets the following specifications:

Peak Surge Current (Single pulse, 8x20µs).....10,000A
Occurrences (8x20µs waveform).....100 @ 2,000A
Maximum Clamp Voltage.....30V
Response Time.....< 1 nanosecond

Provide a 120 VAC signal surge suppressor for each AC+ interconnect signal input. Ensure the device meets the following specifications:

Peak Surge Current (Single pulse, 8x20µs).....20,000A
Maximum Clamp Voltage.....350VAC
Response Time.....< 200 nanoseconds
Discharge Voltage.....<200 Volts @ 1,000A
Insulation Resistance.....≥100 MΩ

Provide conductors for surge protection wiring that are of sufficient size (ampacity) to withstand maximum overcurrents which could occur before protective device thresholds are attained and current flow is interrupted.

If additional surge protected power outlets are needed to accommodate fiber transceivers, modems, etc., install a UL listed, industrial, heavy-duty type power outlet strip with a minimum rating of 15 A / 125 VAC, 60 Hz. Provide a strip that has a minimum of 3 grounded outlets. Ensure the power outlet strip plugs into one of the controller unit receptacles located on the rear of the PDA. Ensure power outlet strip is mounted securely; provide strain relief if necessary.

Provide a door switch in the front and a door switch in the rear of the cabinet that will provide the controller unit with a Door Ajar alarm when either the front or the rear door is open. Ensure the door switches apply DC ground to the Input File when either the front door or the rear door is open.

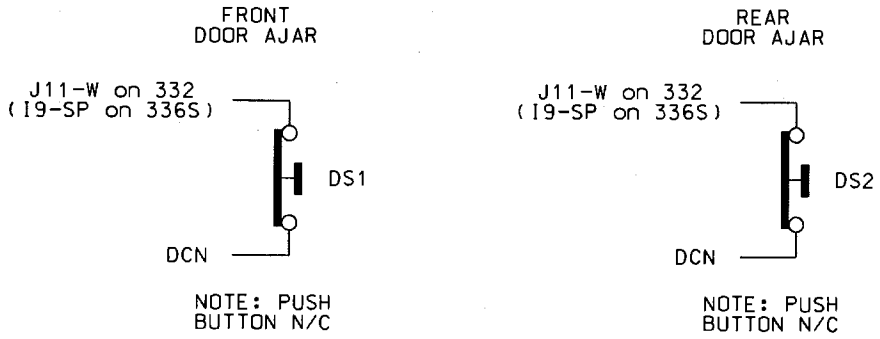

Furnish a fluorescent fixture in the rear across the top of the cabinet and another fluorescent fixture in the front across the top of the cabinet at a minimum. Ensure that the fixtures provide sufficient light to illuminate all terminals, labels, switches, and devices in the cabinet. Conveniently locate the fixtures so as not to interfere with a technician's ability to perform work on any devices or terminals in the cabinet. Provide a protective diffuser to cover exposed bulbs. Install 16 watt T-4

lamps in the fluorescent fixtures. Provide a door switch to provide power to each fixture when the respective door is open. Wire the fluorescent fixtures to the 15 amp ECB (equipment circuit breaker).

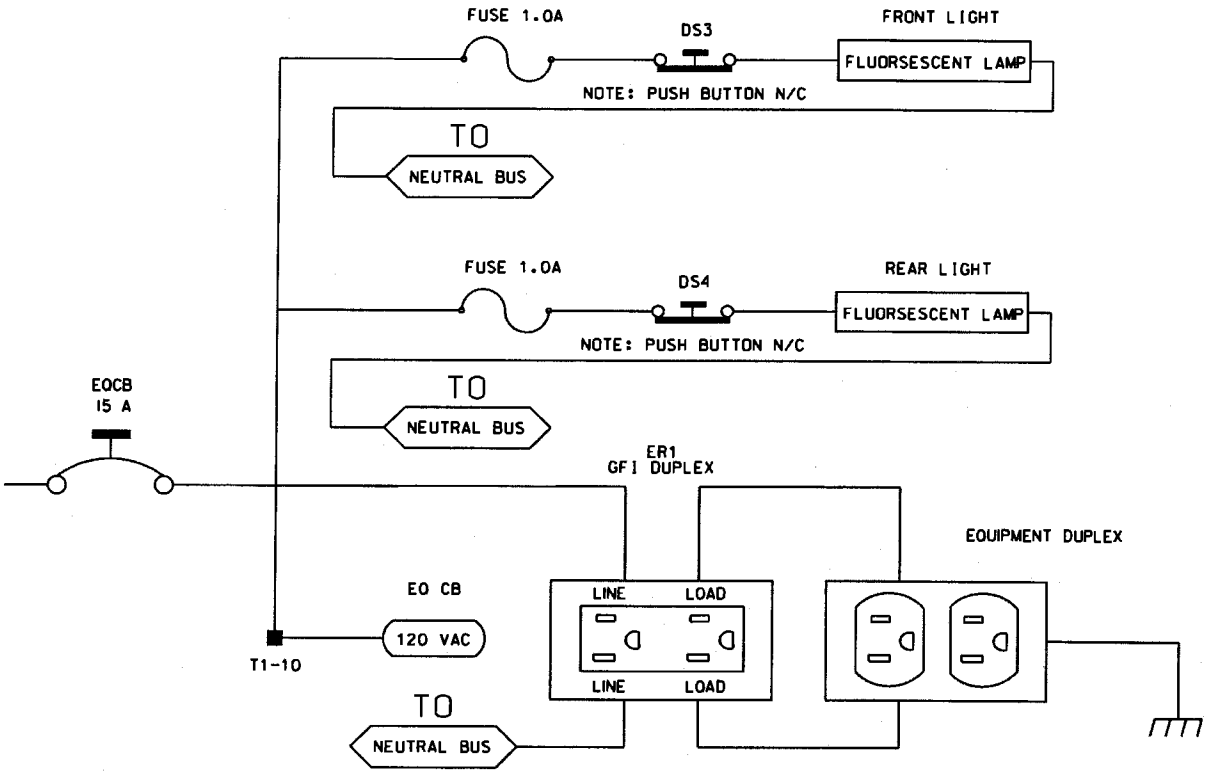

Furnish a police panel with a police panel door. For model 336S cabinets, mount the police panel on the rear door. Ensure that the police panel door permits access to the police panel when the main door is closed. Ensure that no rainwater can enter the cabinet even with the police panel door open. Provide a police panel door hinged on the right side as viewed from the front. Provide a police panel door lock that is keyed to a standard police/fire call box key. In addition to the requirements of LA Specification No. 54-053-08, provide the police panel with a toggle switch connected to switch the intersection operation between normal stop-and-go operation (AUTO) and manual operation (MANUAL). Ensure that manual control can be implemented using inputs and software such that the controller provides full programmed clearance times for the yellow clearance and red clearance for each phase while under manual control.

Provide a 1/4-inch locking phone jack in the police panel for a hand control to manually control the intersection. Provide sufficient room in the police panel for storage of a hand control and cord.

For model 332 base mounted cabinets, ensure terminals J14-E and J14-K are wired together on the rear of the Input File. Connect TB9-12 (J14 Common) on the Input Panel to T1-2 (AC-) on the rear of the PDA.

Provide detector test switches mounted at the top of the cabinet rack or other convenient location which may be used to place a call on each of eight phases based on the chart below. Provide three positions for each switch: On (place call), Off (normal detector operation), and Momentary On (place momentary call and return to normal detector operation after switch is released). Ensure that

the switches are located such that the technician can read the controller display and observe the intersection.

Connect detector test switches for cabinets as follows:

332 Cabinet	
Detector Call Switches	**Terminals**
Phase 1	I1-W
Phase 2	I4-W
Phase 3	I5-W
Phase 4	I8-W
Phase 5	J1-W
Phase 6	J4-W
Phase 7	J5-W
Phase 8	J8-W

Provide the PCB 28/56 connector for the conflict monitor unit (CMU) with 28 independent contacts per side, dual-sided with 0.156 inch contact centers. Provide the PCB 28/56 connector contacts with solder eyelet terminations. Ensure all connections to the PCB 28/56 connector are soldered to the solder eyelet terminations.

Ensure that all cabinets have the CMU connector wired according to the 332 cabinet connector pin assignments (include all wires for auxiliary output file connection). Wire pins 13, 16, R, and U of the CMU connector to a separate 4 pin plug, P1, as shown below. Provide a second plug, P2, which will mate with P1 and is wired to the auxiliary output file as shown below. Provide an additional plug, P3, which will mate with P1 and is wired to the pedestrian yellow circuits as shown below. When no auxiliary output file is installed in the cabinet, provide wires for the green and yellow inputs for channels 11, 12, 17, and 18, the red inputs for channels 17 and 18, and the wires for the P2 plug. Terminate the two-foot wires with ring type lugs, insulated, and bundled for optional use.

	P1		P2		P3	
PIN	**FUNCTION**	**CONN TO**	**FUNCTION**	**CONN TO**	**FUNCTION**	**CONN TO**
1	CH-9G	CMU-13	OLA-GRN	A123	2P-YEL	114
2	CH-9Y	CMU-16	OLA-YEL	A122	4P-YEL	105
3	CH-10G	CMU-R	OLB-GRN	A126	6P-YEL	120
4	CH-10Y	CMU-U	OLB-YEL	A125	8P-YEL	111

Connect the P20 terminal assembly (red monitor board) to a connector installed on the front of the type 2018 enhanced conflict monitor through a 3-1/2 foot 20-wire ribbon cable. Ensure that the ribbon cable connector and the connector on the conflict monitor are keyed to ensure proper connection. Ensure that removal of the P20 ribbon cable will cause the conflict monitor to recognize a latching fault condition and place the cabinet into flashing operation.

Wire the P20 connector to the traffic signal red displays to provide inputs to the conflict monitor as shown below. Ensure the pedestrian Don't Walk circuits are wired to channels 13 through 16 of the P20 connector. When no auxiliary output file is installed in the cabinet, provide wires for

channels 9 through 12 reds. Terminate the two-foot wires with ring type lugs, insulated, and bundled for optional use.

Pin #	Function	Pin #	Function
1	Channel 15 Red	11	Channel 9 Red
2	Channel 16 Red	12	Channel 8 Red
3	Channel 14 Red	13	Channel 7 Red
4	GND	14	Channel 6 Red
5	Channel 13 Red	15	Channel 5 Red
6	Special Function 2	16	Channel 4 Red
7	Channel 12 Red	17	Channel 3 Red
8	Special Function 1	18	Channel 2 Red
9	Channel 10 Red	19	Channel 1 Red
10	Channel 11 Red	20	Red Enable

Ensure the controller unit outputs to the auxiliary output file are pre-wired to the C5 connector. When no auxiliary output file is installed in the cabinet, connect the C5 connector to a storage socket located on the Input Panel or on the rear of the PDA.

In addition to the requirements of LA Specification No. 54-053-08, ensure relay K1 on the Power Distribution Assembly (PDA) is a four pole relay and K2 on the PDA is a two pole relay.

Provide a two pole, ganged circuit breaker for the flash bus circuit. Ensure the flash bus circuit breaker is an inverse time circuit breaker rated for 10 amps at 120 VAC with a minimum of 10,000 RMS symmetrical amperes short circuit current rating. Do not provide the auxiliary switch feature on the flash bus circuit breaker. Ensure the ganged flash bus circuit breaker is certified by the circuit breaker manufacturer to provide gang tripping operation.

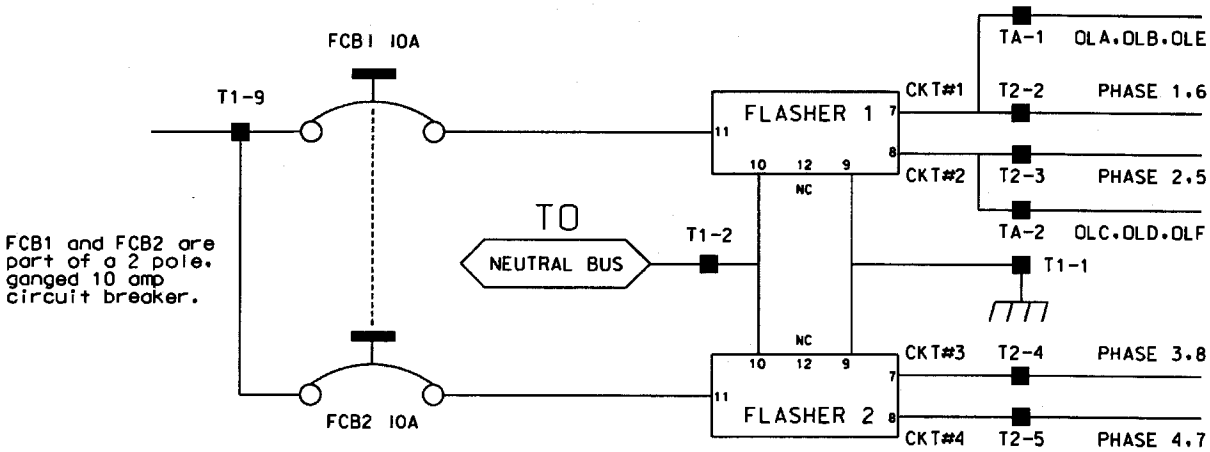

Ensure auxiliary output files are wired as follows:

AUXILIARY OUTPUT FILE TERMINAL BLOCK TA ASSIGNMENTS	
POSITION	**FUNCTION**
1	Flasher Unit #1, Circuit 1/FTR1 (OLA, OLB)/FTR3 (OLE)
2	Flasher Unit #1, Circuit 2/FTR2 (OLC, OLD)/FTR3 (OLF)
3	Flash Transfer Relay Coils
4	AC -
5	Power Circuit 5
6	Power Circuit 5
7	Equipment Ground Bus
8	NC

Provide four spare load resistors mounted in each cabinet. Ensure each load resistor is rated as shown in the table below. Wire one side of each load resistor to AC-. Connect the other side of each resistor to a separate terminal on a four (4) position terminal block. Mount the load resistors and terminal block either inside the back of Output File No. 1 or on the upper area of the Service Panel.

ACCEPTABLE LOAD RESISTOR VALUES	
VALUE (ohms)	**WATTAGE**
1.5K – 1.9 K	25W (min)
2.0K – 3.0K	10W (min)

Provide Model 200 load switches, Model 204 flashers, Model 242 DC isolators, Model 252 AC isolators, and Model 206L power supply units that conform to CALTRANS' "*Transportation Electrical Equipment Specifications*" dated March 12, 2009 with Erratum 1.

C. Type 170 E Cabinet Physical Requirements:

Do not mold, cast, or scribe the name "City of Los Angeles" on the outside of the cabinet door as specified in LA Specification No. 54-053-08. Do not provide a Communications Terminal Panel as specified in LA Specification No. 54-053-08. Do not provide terminal block TBB on the Service Panel. Do not provide Cabinet Verification Test Program software or associated test jigs as specified in LA Specification No. 54-053-08.

Furnish unpainted, natural, aluminum cabinet shells. Ensure that all non-aluminum hardware on the cabinet is stainless steel or a Department approved non-corrosive alternate.

Ensure the lifting eyes, gasket channels, police panel, and all supports welded to the enclosure and doors are fabricated from 0.125 inch minimum thickness aluminum sheet and meet the same standards as the cabinet and doors.

Provide front and rear doors with latching handles that allow padlocking in the closed position. Furnish 0.75 inch minimum diameter stainless steel handles with a minimum 0.5 inch shank. Place the padlocking attachment at 4.0 inches from the handle shank center to clear the lock and key. Provide an additional 4.0 inches minimum gripping length.

Provide Corbin #2 locks on the front and rear doors. Provide one (1) Corbin #2 and one (1) police master key with each cabinet. Ensure main door locks allow removal of keys in the locked position only.

Provide a surge protection panel with 16 loop surge protection devices and designed to allow sufficient free space for wire connection/disconnection and surge protection device replacement. For

model 332 cabinets, provide an additional 20 loop surge protection devices. Provide an additional two AC+ interconnect surge devices to protect one slot and eight DC surge protection devices to protect four slots. Provide no protection devices on slot I14.

For base mounted cabinets, mount surge protection panels on the left side of the cabinet as viewed from the rear. Attach each panel to the cabinet rack assembly using bolts and make it easily removable. Mount the surge protection devices in vertical rows on each panel and connect the devices to one side of 12 position, double row terminal blocks with #8 screws. For each surge protection panel, terminate all grounds from the surge protection devices on a copper equipment ground bus attached to the surge protection panel. Wire the terminals to the rear of a standard input file using spade lugs for input file protection.

Provide permanent labels that indicate the slot and the pins connected to each terminal that may be viewed from the rear cabinet door. Label and orient terminals so that each pair of inputs is next to each other. Indicate on the labeling the input file (I or J), the slot number (1-14) and the terminal pins of the input slots (either D & E for upper or J & K for lower).

Provide a minimum 14 x 16 inch pull out, hinged top shelf located immediately below controller mounting section of the cabinet. Ensure the shelf is designed to fully expose the table surface outside the controller at a height approximately even with the bottom of the controller. Ensure the shelf has a storage bin interior which is a minimum of 1 inch deep and approximately the same dimensions as the shelf. Provide an access to the storage area by lifting the hinged top of the shelf. Fabricate the shelf and slide from aluminum or stainless steel and ensure the assembly can support the 2070L controller plus 15 pounds of additional weight. Ensure shelf has a locking mechanism to secure it in the fully extended position and does not inhibit the removal of the 2070L controller or removal of cards inside the controller when fully extended. Provide a locking mechanism that is easily released when the shelf is to be returned to its non-use position directly under the controller.

D. Model 2018 Enhanced Conflict Monitor:

Furnish Model 2018 Enhanced Conflict Monitors that provide monitoring of 18 channels. Ensure each channel consists of a green, yellow, and red field signal input. Ensure that the conflict monitor meets or exceeds CALTRANS' Transportation Electrical Equipment Specifications dated March 12, 2009 with Erratum 1 (hereafter referred to as CALTRANS' 2009 TEES) for a model 210 monitor unit and other requirements stated in this specification.

Ensure the conflict monitor is provided with an 18 channel conflict programming card. Pin EE and Pin T of the conflict programming card shall be connected together. Pin 16 of the conflict programming card shall be floating. Ensure that the absence of the conflict programming card will cause the conflict monitor to trigger (enter into fault mode), and remain in the triggered state until the programming card is properly inserted and the conflict monitor is reset.

Provide a conflict monitor that incorporates LED indicators into the front panel to dynamically display the status of the monitor under normal conditions and to provide a comprehensive review of field inputs with monitor status under fault conditions. Ensure that the monitor indicates the channels that were active during a conflict condition and the channels that experienced a failure for all other per channel fault conditions detected. Ensure that these indications and the status of each channel are retained until the Conflict Monitor is reset. Furnish LED indicators for the following:

- AC Power (Green LED indicator)
- VDC Failed (Red LED indicator)
- WDT Error (Red LED indicator)

- Conflict (Red LED indicator)
- Red Fail (Red LED indicator)
- Dual Indication (Red LED indicator)
- Yellow/Clearance Failure (Red LED indicator)
- PCA/PC Ajar (Red LED indicator)
- Monitor Fail/Diagnostic Failure (Red LED indicator)
- 54 Channel Status Indicators (1 Red, 1 Yellow, and 1 Green LED indicator for each of the 18 channels)

Provide a switch to set the Red Fail fault timing. Ensure that when the switch is in the ON position the Red Fail fault timing value is set to 1350 +/- 150ms (2018 mode). Ensure that when the switch is in the OFF position the Red Fail fault timing value is set to 850 +/- 150ms (210 mode).

Provide a switch to set the Watchdog fault timing. Ensure that when the switch is in the ON position the Watchdog fault timing value is set to 1.0 +/- 0.1s (2018 mode). Ensure that when the switch is in the OFF position the Watchdog fault timing value is set to 1.5 +/- 0.1s (210 mode).

Provide a jumper or switch to set the AC line brown-out levels. Ensure that when the jumper is present or the switch is in the ON position the AC line dropout voltage threshold is 98 +/- 2 Vrms, the AC line restore voltage threshold is 103 +/- 2 Vrms, and the AC line brown-out timing value is set to 400 +/- 50ms (2018 mode). Ensure that when the jumper is not present or the switch is in the OFF position the AC line dropout voltage threshold is 92 +/- 2 Vrms, the AC line restore voltage threshold is 98 +/- 2 Vrms, and the AC line brown-out timing value is set to 80 +/- 17ms (210 mode).

Provide a jumper or switch that will enable and disable the Watchdog Latch function. Ensure that when the jumper is not present or the switch is in the OFF position the Watchdog Latch function is disabled. In this mode of operation, a Watchdog fault will be reset following a power loss, brownout, or power interruption. Ensure that when the jumper is present or the switch is in the ON position the Watchdog Latch function is enabled. In this mode of operation, a Watchdog fault will be retained until a Reset command is issued.

Provide a jumper that will reverse the active polarity for pin #EE (output relay common). Ensure that when the jumper is not present pin #EE (output relay common) will be considered 'Active' at a voltage greater than 70 Vrms and 'Not Active' at a voltage less than 50 Vrms (Caltrans mode). Ensure that when the jumper is present pin #EE (output relay common) will be considered 'Active' at a voltage less than 50 Vrms and 'Not Active' at a voltage greater than 70 Vrms (Failsafe mode).

In addition to the connectors required by CALTRANS' 2009 TEES, provide the conflict monitor with a red interface connector mounted on the front of the monitor. Ensure the connector is a 20 pin, right angle, male connector with latching clip locks and polarizing keys. Ensure the right angle solder tails are designed for a 0.062" thick printed circuit board. Keying of the connector shall be between pins 3 and 5, and between 17 and 19. Ensure the connector has two rows of pins with the odd numbered pins on one row and the even pins on the other row. Ensure the connector pin row spacing is 0.10" and pitch is 0.10". Ensure the mating length of the connector pins is 0.24". Ensure the pins are finished with gold plating 30μ" thick.

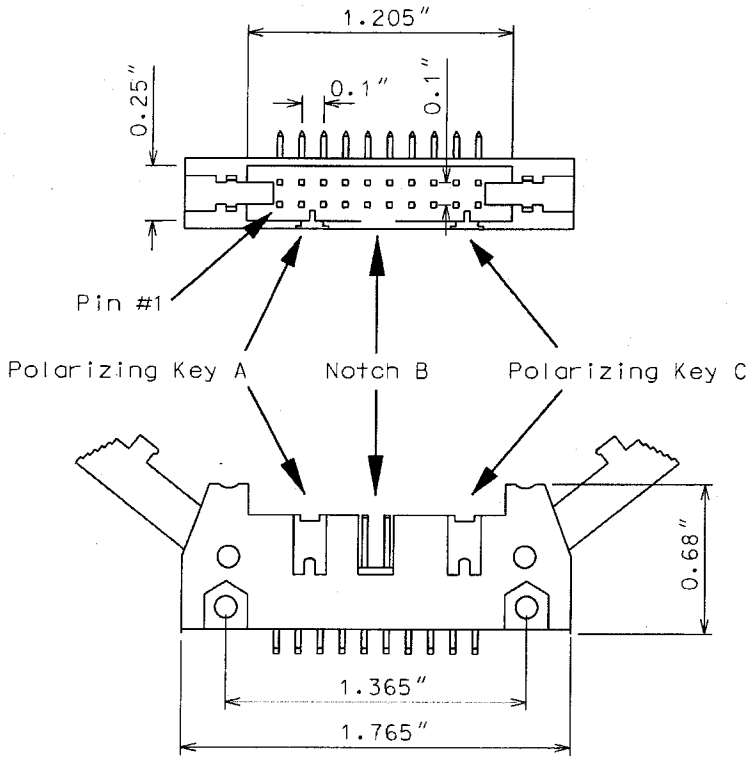

Ensure the red interface connector pins on the monitor have the following functions:

Pin #	Function	Pin #	Function
1	Channel 15 Red	2	Channel 16 Red
3	Channel 14 Red	4	Chassis Ground
5	Channel 13 Red	6	Special Function 2
7	Channel 12 Red	8	Special Function 1
9	Channel 10 Red	10	Channel 11 Red
11	Channel 9 Red	12	Channel 8 Red
13	Channel 7 Red	14	Channel 6 Red
15	Channel 5 Red	16	Channel 4 Red
17	Channel 3 Red	18	Channel 2 Red
19	Channel 1 Red	20	Red Enable

Ensure that the removal of the P-20 red interface ribbon cable will cause the monitor to recognize a latching fault condition and place the cabinet into flashing operation.

Provide Special Function 1 and Special Function 2 inputs to the unit which shall disable only Red Fail Monitoring when either input is sensed active. A Special Function input shall be sensed active when the input voltage exceeds 70 Vrms with a minimum duration of 550 ms. A Special Function input shall be sensed not active when the input voltage is less than 50 Vrms or the duration is less than 250 ms. A Special Function input is undefined by these specifications and may or may not be sensed active when the input voltage is between 50 Vrms and 70 Vrms or the duration is between 250 ms and 550 ms.

Ensure the conflict monitor recognizes field signal inputs for each channel that meet the following requirements:

- consider a Red input greater than 70 Vrms and with a duration of at least 500 ms as an "on" condition;
- consider a Red input less than 50 Vrms or with a duration of less than 200 ms as an "off" condition (no valid signal);
- consider a Red input between 50 Vrms and 70 Vrms or with a duration between 200 ms and 500 ms to be undefined by these specifications;
- consider a Green or Yellow input greater than 25 Vrms and with a duration of at least 500 ms as an "on" condition;
- consider a Green or Yellow input less than 15 Vrms or with a duration of less than 200 ms as an "off" condition; and
- consider a Green or Yellow input between 15 Vrms and 25 Vrms or with a duration between 200 ms and 500 ms to be undefined by these specifications.

Provide a conflict monitor that recognizes the faults specified by CALTRANS' 2009 TEES and the following additional faults. Ensure the conflict monitor will trigger upon detection of a fault and will remain in the triggered (in fault mode) state until the unit is reset at the front panel or through the external remote reset input for the following failures:

1. **Red Monitoring or Absence of Any Indication (Red Failure):** A condition in which no "on" voltage signal is detected on any of the green, yellow, or red inputs to a given monitor channel. If a signal is not detected on at least one input (R, Y, or G) of a conflict monitor channel for a period greater than 1000 ms when used with a 170 controller and 1500 ms when used with a 2070L controller, ensure monitor will trigger and put the intersection into flash. If the absence of any indication condition lasts less that 750 ms when used with a 170 controller and 1200 ms when used with a 2070L controller, ensure conflict monitor will not trigger. Red fail monitoring shall be enabled on a per channel basis by the use of switches located on the conflict monitor. Have red monitoring occur when all of the following input conditions are in effect:

   a) Red Enable input to monitor is active (Red Enable voltages are "on" at greater than 70 Vrms, off at less than 50 Vrms, undefined between 50 and 70 Vrms), and

   b) Neither Special Function 1 nor Special Function 2 inputs are active.

   c) Pin #EE (output relay common) is not active

2. **Short/Missing Yellow Indication Fault (Clearance Error):** Yellow indication following a green is missing or shorter than 2.7 seconds (with ± 0.1-second accuracy). If a channel fails to detect an "on" signal at the Yellow input for a minimum of 2.7 seconds (± 0.1 second) following the detection of an "on" signal at a Green input for that channel, ensure that the monitor triggers and generates a clearance/short yellow error fault indication. Short/missing yellow (clearance) monitoring shall be enabled on a per channel basis by the use of switches located on the conflict monitor. This fault shall not occur when the channel is programmed for Yellow Inhibit, when the Red Enable signal is inactive or pin #EE (output relay common) is active.

3. **Dual Indications on the Same Channel:** In this condition, more than one indication (R,Y,G) is detected as "on" at the same time on the same channel. If dual indications are detected for a period greater than 500 ms, ensure that the conflict monitor triggers and displays the proper failure indication (Dual Ind fault). If this condition is detected for less

than 200 ms, ensure that the monitor does not trigger. G-Y-R dual indication monitoring shall be enabled on a per channel basis by the use of switches located on the conflict monitor. G-Y dual indication monitoring shall be enabled for all channels by use of a switch located on the conflict monitor. This fault shall not occur when the Red Enable signal is inactive or pin #EE (output relay common) is active.

4. **Configuration Settings Change:** The configuration settings are comprised of (as a minimum) the permissive diode matrix, dual indication switches, yellow disable jumpers, any option switches, any option jumpers, and the Watchdog Enable switch. Ensure the conflict monitor compares the current configuration settings with the previous stored configuration settings on power-up, on reset, and periodically during operation. If any of the configuration settings are changed, ensure that the conflict monitor triggers and causes the program card indicator to flash. Ensure that configuration change faults are only reset by depressing and holding the front panel reset button for a minimum of three seconds. Ensure the external remote reset input does not reset configuration change faults.

Ensure the conflict monitor will trigger and the AC Power indicator will flash at a rate of 2 Hz ± 20% with a 50% duty cycle when the AC Line voltage falls below the "drop-out" level. Ensure the conflict monitor will resume normal operation when the AC Line voltage returns above the "restore" level. Ensure the AC Power indicator will remain illuminated when the AC voltage returns above the "restore" level. Should an AC Line power interruption occur while the monitor is in the fault mode, then upon restoration of AC Line power, the monitor will remain in the fault mode and the correct fault and channel indicators will be displayed.

Provide a flash interval of at least 6 seconds and at most 10 seconds in duration following a power-up, an AC Line interruption, or a brownout restore. Ensure the conflict monitor will suspend all fault monitoring functions, close the Output relay contacts, and flash the AC indicator at a rate of 4 Hz ± 20% with a 50% duty cycle during this interval. Ensure the termination of the flash interval after at least 6 seconds if the Watchdog input has made 5 transitions between the True and False state and the AC Line voltage is greater than the "restore" level. If the watchdog input has not made 5 transitions between the True and False state within 10 ± 0.5 seconds, the monitor shall enter a WDT error fault condition.

Ensure the conflict monitor will monitor an intersection with a minimum of four approaches using the four-section Flashing Yellow Arrow (FYA) vehicle traffic signal as outlined by the NCHRP 3-54 research project for protected-permissive left turn signal displays. Ensure the conflict monitor will operate in the FYA mode and FYAc (Compact) mode as specified below to monitor each channel for the following fault conditions: Conflict, Red Fail, Dual Indication, and Clearance. Provide a switch to select between the FYA mode and FYAc mode. Provide a switch to select each FYA phase movement for monitoring.

FYA mode

FYA Signal Head	Phase 1	Phase 3	Phase 5	Phase 7
Red Arrow	Channel 9 Red	Channel 10 Red	Channel 11 Red	Channel 12 Red
Yellow Arrow	Channel 9 Yellow	Channel 10 Yellow	Channel 11 Yellow	Channel 12 Yellow
Flashing Yellow Arrow	Channel 9 Green	Channel 10 Green	Channel 11 Green	Channel 12 Green
Green Arrow	Channel 1 Green	Channel 3 Green	Channel 5 Green	Channel 7 Green

FYAc mode

FYA Signal Head	Phase 1	Phase 3	Phase 5	Phase 7
Red Arrow	Channel 1 Red	Channel 3 Red	Channel 5 Red	Channel 7 Red
Yellow Arrow	Channel 1 Yellow	Channel 3 Yellow	Channel 5 Yellow	Channel 7 Yellow
Flashing Yellow Arrow	Channel 1 Green	Channel 3 Green	Channel 5 Green	Channel 7 Green
Green Arrow	Channel 9 Green	Channel 9 Yellow	Channel 10 Green	Channel 10 Yellow

Ensure that the conflict monitor will log at least nine of the most recent events detected by the monitor in non-volatile EEPROM memory (or equivalent). For each event, record at a minimum the time, date, type of event, status of each field signal indication with RMS voltage, and specific channels involved with the event. Ensure the conflict monitor will log the following events: monitor reset, configuration, previous fault, and AC line. Furnish the signal sequence log that shows all channel states (Greens, Yellows, and Reds) and the Red Enable State for a minimum of 2 seconds prior to the current fault trigger point. Ensure the display resolution of the inputs for the signal sequence log is not greater than 50 ms.

Provide a RS-232C/D compliant port (DB-9 female connector) on the front panel of the conflict monitor in order to provide communications from the conflict monitor to the 170/2070L controller or to a Department-furnished laptop computer. Electrically isolate the port interface electronics from all monitor electronics, excluding Chassis Ground. Ensure that the controller can receive all event log information through a controller Asynchronous Communications Interface Adapter (Type 170E) or Async Serial Comm Module (2070L). Provide a Windows based graphic user interface software to communicate directly through the same monitor RS-232C/D compliant port to retrieve and view all event log information to a Department-furnished laptop computer. The RS-232C/D compliant port on the monitor shall allow the monitor to function as a DCE device with pin connections as follows:

Conflict Monitor RS-232C/D (DB-9 Female) Pinout		
Pin Number	**Function**	**I/O**
1	DCD	O
2	TX Data	O
3	RX Data	I
4	DTR	I
5	Ground	-
6	DSR	O
7	CTS	I
8	RTS	O
9	NC	-

MONITOR BOARD EDGE CONNECTOR

Pin #	Function (Back Side)	Pin #	Function (Component Side)
1	Channel 2 Green	A	Channel 2 Yellow
2	Channel 13 Green	B	Channel 6 Green
3	Channel 6 Yellow	C	Channel 15 Green
4	Channel 4 Green	D	Channel 4 Yellow
5	Channel 14 Green	E	Channel 8 Green
6	Channel 8 Yellow	F	Channel 16 Green
7	Channel 5 Green	H	Channel 5 Yellow
8	Channel 13 Yellow	J	Channel 1 Green
9	Channel 1 Yellow	K	Channel 15 Yellow
10	Channel 7 Green	L	Channel 7 Yellow
11	Channel 14 Yellow	M	Channel 3 Green
12	Channel 3 Yellow	N	Channel 16 Yellow
13	Channel 9 Green	P	Channel 17 Yellow
14	Channel 17 Green	R	Channel 10 Green
15	Channel 11 Yellow	S	Channel 11 Green
16	Channel 9 Yellow	T	Channel 18 Yellow
17	Channel 18 Green	U	Channel 10 Yellow
--		--	
18	Channel 12 Yellow	V	Channel 12 Green
19	Channel 17 Red	W	Channel 18 Red
20	Chassis Ground	X	Not Assigned
21	AC-	Y	DC Common
22	Watchdog Timer	Z	External Test Reset
23	+24VDC	AA	+24VDC
24	Tied to Pin 25	BB	Stop Time (Output)
25	Tied to Pin 24	CC	Not Assigned
26	Not Assigned	DD	Not Assigned
27	Relay Output, Side #3, N.O.	EE	Relay Output,Side #2,Common
28	Relay Output, Side #1, N.C.	FF	AC+

-- Slotted for keying between Pins 17/U and 18/V

CONFLICT PROGRAM CARD PIN ASSIGNMENTS

Pin #	Function (Back Side)	Pin #	Function (Component Side)
1	Channel 2 Green	A	Channel 1 Green
2	Channel 3 Green	B	Channel 2 Green
3	Channel 4 Green	C	Channel 3 Green
4	Channel 5 Green	D	Channel 4 Green
5	Channel 6 Green	E	Channel 5 Green
6	Channel 7 Green	F	Channel 6 Green
7	Channel 8 Green	H	Channel 7 Green
8	Channel 9 Green	J	Channel 8 Green
9	Channel 10 Green	K	Channel 9 Green
10	Channel 11 Green	L	Channel 10 Green
11	Channel 12 Green	M	Channel 11 Green
12	Channel 13 Green	N	Channel 12 Green
13	Channel 14 Green	P	Channel 13 Green
14	Channel 15 Green	R	Channel 14 Green
15	Channel 16 Green	S	Channel 15 Green
16	N/C	T	PC AJAR
17	Channel 1 Yellow	U	Channel 9 Yellow
18	Channel 2 Yellow	V	Channel 10 Yellow
19	Channel 3 Yellow	W	Channel 11 Yellow
20	Channel 4 Yellow	X	Channel 12 Yellow
21	Channel 5 Yellow	Y	Channel 13 Yellow
22	Channel 6 Yellow	Z	Channel 14 Yellow
23	Channel 7 Yellow	AA	Channel 15 Yellow
24	Channel 8 Yellow	BB	Channel 16 Yellow
--		--	
25	Channel 17 Green	CC	Channel 17 Yellow
26	Channel 18 Green	DD	Channel 18 Yellow
27	Channel 16 Green	EE	PC AJAR (Program Card)
28	Yellow Inhibit Common	FF	Channel 17 Green

-- Slotted for keying between Pins 24/BB and 25/CC

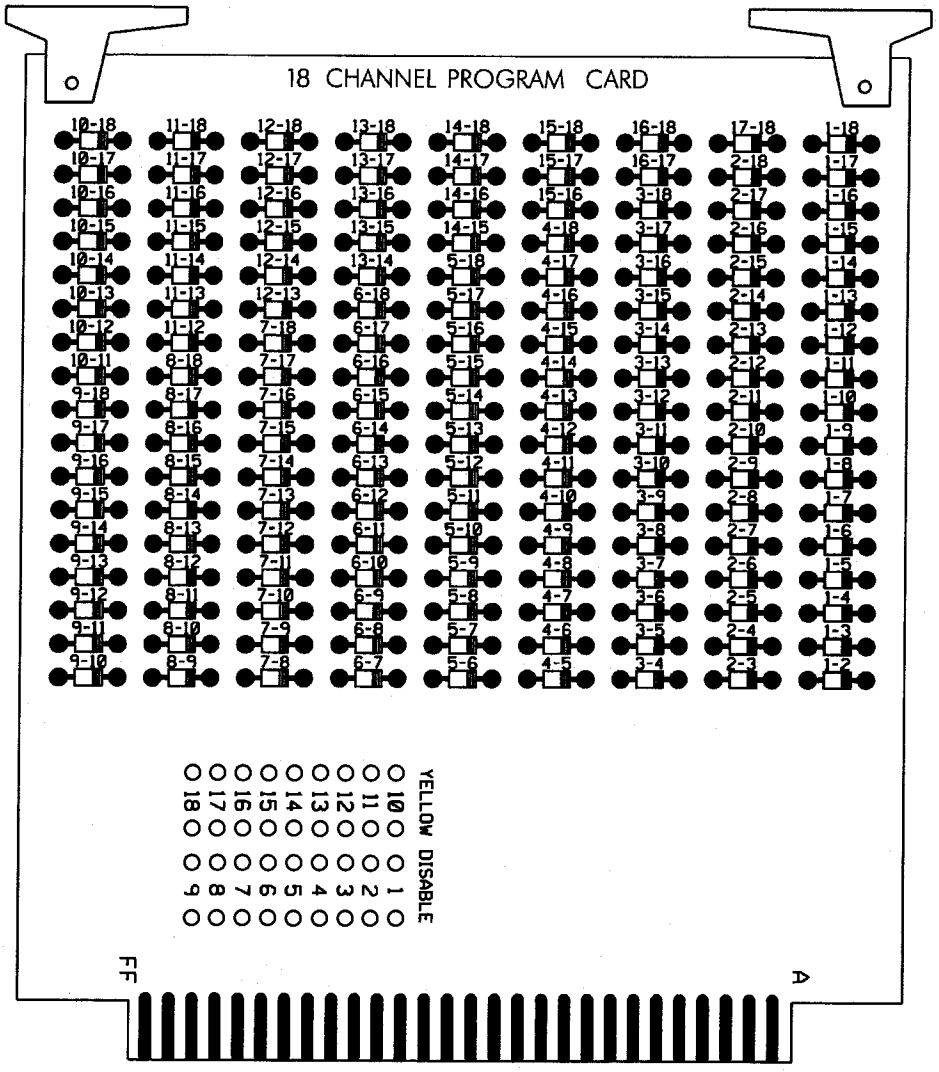

2.4. MATERIALS – TYPE 170 DETECTOR SENSOR UNITS

Furnish detector sensor units that comply with Chapter 5 Section 1, "General Requirements," and Chapter 5 Section 2, "Model 222 & 224 Loop Detector Sensor Unit Requirements," of the CALTRANS "Transportation Electrical Equipment Specifications" dated March 12, 2009 with Erratum 1.

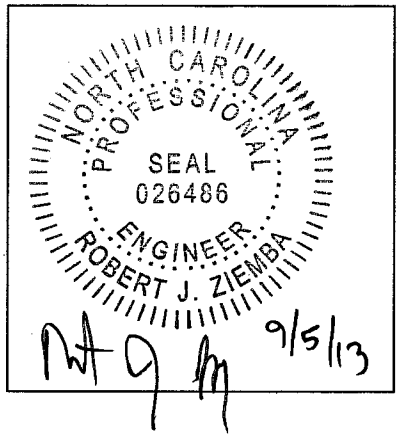

P-5206D

Project Special Provisions
(Version 12.2)
Signals and Intelligent Transportation Systems

Prepared By: RJZ
5-Sep-13

Contents

1. 2012 STANDARD SPECIFICATIONS FOR ROADS & STRUCTURES 3
1.1. POLYMER CONCRETE (PC) JUNCTION BOXES (1091-5(B)) 3
1.2. JUNCTION BOXES (1098-5) 3
1.3. CONTROLLERS WITH CABINETS – MATERIAL (1751-2) 3

2. SIGNAL HEADS 3
2.1. MATERIALS 3
A. General: *3*
B. Vehicle Signal Heads: *4*
C. Signal Cable: *6*

3. TRAFFIC SIGNAL SUPPORTS 7
3.1. METAL TRAFFIC SIGNAL SUPPORTS – ALL POLES 7
A. General: *7*
B. Materials: *9*
C. Construction Methods: *10*
3.2. METAL STRAIN POLE 10
A. Materials: *10*
B. Construction Methods: *12*
3.3. METAL POLE WITH MAST ARM 12
A. Materials: *13*
B. Construction Methods: *13*
3.4. DRILLED PIER FOUNDATIONS FOR METAL TRAFFIC SIGNAL POLES 14
A. Description: *14*
B. Soil Test and Foundation Determination: *15*
C. Drilled Pier Construction: *17*
3.5. CUSTOM DESIGN OF TRAFFIC SIGNAL SUPPORTS 17
A. General: *17*
B. Metal Poles: *18*
C. Mast Arms: *20*
3.6. POLE NUMBERING SYSTEM 20
3.7. MEASUREMENT AND PAYMENT 20

4. CONTROLLERS WITH CABINETS 21
4.1. MATERIALS – TYPE 2070L CONTROLLERS 21
4.2. MATERIALS – GENERAL CABINETS 21
4.3. MATERIALS – TYPE 170E CABINETS 22
A. Type 170 E Cabinets General: *22*
B. Type 170 E Cabinet Electrical Requirements: *22*
C. Type 170 E Cabinet Physical Requirements: *29*
D. Model 2018 Enhanced Conflict Monitor: *30*

E. Preemption and Sign Control Box *39*

4.4. MATERIALS – TYPE 170 DETECTOR SENSOR UNITS 42

4.5. MATERIALS – TYPE 2070E CONTROLLERS 42

5. RIGID METALLIC CONDUIT 42

5.1. DESCRIPTION 42

5.2. MATERIALS 42

5.3. CONSTRUCTION METHODS 42

5.4. MEASUREMENT AND PAYMENT 43

1. 2012 STANDARD SPECIFICATIONS FOR ROADS & STRUCTURES

The 2012 Standard Specifications are revised as follows:

1.1. Polymer Concrete (PC) Junction Boxes (1091-5(B))

Page 10-202, revise paragraph starting on line 9 to read "Provide polymer concrete (PC) boxes which have bolted covers and open bottoms. Provide vertical extensions of 6" to 12" as required by project special provisions."

Page 10-202, revise sentence beginning on line 14 to read "Other thermoplastic materials may be used for components which are not normally exposed to sunlight."

1.2. Junction Boxes (1098-5)

Page 10-212, sub-Section 1098-5(C) Oversized Junction Boxes

Revise sentence to read, "Provide oversized junction boxes and covers with minimum inside dimensions of 28"(l) x 15"(w) x 22"(h)."

1.3. Controllers with Cabinets – Material (1751-2)

Page 17-37, Section 1751-2 Material

Add the following paragraph:

When the plans or specifications require a Type 2070L controller, contractor may provide a Type 2070E controller. Unless otherwise allowed by the Engineer, provide controllers of only one type.

2. SIGNAL HEADS

2.1. MATERIALS

A. General:

Fabricate vehicle signal head housings and end caps from die-cast aluminum. Provide visor mounting screws, door latches, and hinge pins fabricated from stainless steel. Provide interior screws, fasteners, and metal parts fabricated from stainless steel or corrosion resistant material.

Fabricate tunnel and traditional visors from sheet aluminum.

Paint all surfaces inside and outside of signal housings and doors. Paint outside surfaces of tunnel and traditional visors, messenger cable mounting assemblies, pole and pedestal mounting assemblies, and pedestrian pushbutton housings. Have electrostatically-applied, fused-polyester paint in highway yellow (Federal Standard 595C, Color Chip Number 13538) a minimum of 2.5 to 3.5 mils thick. Do not apply paint to the latching hardware or rigid vehicle signal head mounting brackets for mast-arm attachments.

Have the interior surfaces of tunnel and traditional visors painted an alkyd urea black synthetic baking enamel with a minimum gloss reflectance and meeting the requirements of MIL-E-10169, "Enamel Heat Resisting, Instrument Black."

For light emitting diode (LED) traffic signal modules, provide the following requirements for inclusion on the Department's Qualified Products List for traffic signal equipment.

1. Sample submittal,

2. Third-party independent laboratory testing results for each submitted module with evidence of testing and conformance with all of the Design Qualification Testing specified in section 6.4 of each of the following Institute of Transportation Engineers (ITE) specifications:
   - Vehicle Traffic Control Signal Heads – Light Emitting Diode (LED) Circular Signal Supplement
   - Vehicle Traffic Control Signal Heads – Light Emitting Diode (LED) Vehicle Arrow Traffic Signal Supplement
   - Pedestrian Traffic Control Signal Indications –Light Emitting Diode (LED) Signal Modules.

   (Note: The Department currently recognizes two approved independent testing laboratories. They are Intertek ETL Semko and Light Metrics, Incorporated with Garwood Laboratories. Independent laboratory tests from other laboratories may be considered as part of the QPL submittal at the discretion of the Department,
3. Evidence of conformance with the requirements of these specifications,
4. A manufacturer's warranty statement in accordance with the required warranty, and
5. Submittal of manufacturer's design and production documentation for the model, including but not limited to, electrical schematics, electronic component values, proprietary part numbers, bill of materials, and production electrical and photometric test parameters.
6. Evidence of approval of the product to bear the Intertek ETL Verified product label for LED traffic signal modules.

In addition to meeting the performance requirements for the minimum period of 60 months, provide a written warranty against defects in materials and workmanship for the modules for a period of 60 months after installation of the modules. During the warranty period, the manufacturer must provide new replacement modules within 45 days of receipt of modules that have failed at no cost to the State. Repaired or refurbished modules may not be used to fulfill the manufacturer's warranty obligations. Provide manufacturer's warranty documentation to the Department during evaluation of product for inclusion on Qualified Products List (QPL).

B. Vehicle Signal Heads:

Comply with the ITE standard "Vehicle Traffic Control Signal Heads". Provide housings with provisions for attaching backplates.

Provide visors that are 10 inches in length for 12-inch vehicle signal heads.

Provide a termination block with one empty terminal for field wiring for each indication plus one empty terminal for the neutral conductor. Have all signal sections wired to the termination block. Provide barriers between the terminals that have terminal screws with a minimum Number 8 thread size and that will accommodate and secure spade lugs sized for a Number 10 terminal screw.

Mount termination blocks in the yellow signal head sections on all in-line vehicle signal heads. Mount the termination block in the red section on five-section vehicle signal heads.

Furnish vehicle signal head interconnecting brackets. Provide one-piece aluminum brackets less than 4.5 inches in height and with no threaded pipe connections. Provide hand holes on the bottom

of the brackets to aid in installing wires to the signal heads. Lower brackets that carry no wires and are used only for connecting the bottom signal sections together may be flat in construction.

For messenger cable mounting, provide messenger cable hangers, wire outlet bodies, balance adjusters, bottom caps, wire entrance fitting brackets, and all other hardware necessary to make complete, watertight connections of the vehicle signal heads to the messenger cable. Fabricate mounting assemblies from malleable iron or steel and provide serrated rings made of aluminum. Provide messenger cable hangers and balance adjusters that are galvanized before being painted. Fabricate balance adjuster eyebolt and eyebolt nut from stainless steel or galvanized malleable iron. Provide messenger cable hangers with U-bolt clamps. Fabricate washers, screws, bolts, clevis pins, cotter pins, nuts, and U-bolt clamps from stainless steel.

For mast-arm mounting, provide rigid vehicle signal head mounting brackets and all other hardware necessary to make complete, watertight connections of the vehicle signal heads to the mast arms and to provide a means for vertically adjusting the vehicle signal heads to proper alignment. Fabricate the mounting assemblies from aluminum, and provide serrated rings made of aluminum. Provide stainless steel cable attachment assemblies to secure the brackets to the mast arms. Ensure all fastening hardware and fasteners are fabricated from stainless steel.

Provide LED vehicular traffic signal modules (hereafter referred to as modules) that consist of an assembly that uses LEDs as the light source in lieu of an incandescent lamp for use in traffic signal sections. Use LEDs that are aluminum indium gallium phosphorus (AlInGaP) technology for red and yellow indications and indium gallium nitride (InGaN) for green indications. Install the ultra bright type LEDs that are rated for 100,000 hours of continuous operation from -40°F to +165°F. Design modules to have a minimum useful life of 60 months and to meet all parameters of this specification during this period of useful life.

For the modules, provide spade terminals crimped to the lead wires and sized for a #10 screw connection to the existing terminal block in a standard signal head. Do not provide other types of crimped terminals with a spade adapter.

Ensure the power supply is integral to the module assembly. On the back of the module, permanently mark the date of manufacture (month & year) or some other method of identifying date of manufacture.

Tint the red, yellow and green lenses to correspond with the wavelength (chromaticity) of the LED. Transparent tinting films are unacceptable. Provide a lens that is integral to the unit with a smooth outer surface.

1. LED Circular Signal Modules:

Provide modules in the following configurations: 12-inch circular sections, and 8-inch circular sections. All makes and models of LED modules purchased for use on the State Highway System shall appear on the current NCDOT Traffic Signal Qualified Products List (QPL).

Provide the manufacturer's model number and the product number (assigned by the Department) for each module that appears on the 2012 or most recent Qualified Products List. In addition, provide manufacturer's certification in accordance with Article 106-3 of the *Standard Specifications,* that each module meets or exceeds the ITE "Vehicle Traffic Control Signal Heads – Light Emitting Diode (LED) Circular Signal Supplement" dated June 27, 2005 (hereafter referred to as VTCSH Circular Supplement) and other requirements stated in this specification.

Provide modules that meet the following requirements when tested under the procedures outlined in the VTCSH Circular Supplement:

Module Type	Max. Wattage at 165° F	Nominal Wattage at 77° F
12-inch red circular	17	11
12-inch green circular	15	15

For yellow circular signal modules, provide modules tested under the procedures outlined in the VTCSH Circular Supplement to insure power required at 77° F is 22 Watts or less for the 12-inch circular module.

Note: Use a wattmeter having an accuracy of ±1% to measure the nominal wattage and maximum wattage of a circular traffic signal module. Power may also be derived from voltage, current and power factor measurements.

2. LED Arrow Signal Modules

Provide 12-inch omnidirectional arrow signal modules. All makes and models of LED modules purchased for use on the State Highway System shall appear on the current NCDOT Traffic Signal Qualified Products List (QPL).

Provide the manufacturer's model number and the product number (assigned by the Department) for each module that appears on the 2012 or most recent Qualified Products List. In addition, provide manufacturer's certification in accordance with Article 106-3 of the *Standard Specifications,* that each module meets or exceeds the requirements for 12-inch omnidirectional modules specified in the ITE "Vehicle Traffic Control Signal Heads – Light Emitting Diode (LED) Vehicle Arrow Traffic Signal Supplement" dated July 1, 2007 (hereafter referred to as VTCSH Arrow Supplement) and other requirements stated in this specification.

Provide modules that meet the following requirements when tested under the procedures outlined in the VTCSH Arrow Supplement:

Module Type	Max. Wattage at 165° F	Nominal Wattage at 77° F
12-inch red arrow	12	9
12-inch green arrow	11	11

For yellow arrow signal modules, provide modules tested under the procedures outlined in the VTCSH Arrow Supplement to insure power required at 77° F is 12 Watts or less.

Note: Use a wattmeter having an accuracy of ±1% to measure the nominal wattage and maximum wattage of an arrow traffic signal module. Power may also be derived from voltage, current and power factor measurements.

C. Signal Cable:

Furnish 16-4 and 16-7 signal cable that complies with IMSA specification 20-1 except provide the following conductor insulation colors:

- For 16-4 cable: white, yellow, red, and green

- For 16-7 cable: white, yellow, red, green, yellow with black stripe tracer, red with black stripe tracer, and green with black stripe tracer. Apply continuous stripe tracer on conductor insulation with a longitudinal or spiral pattern.

Provide a ripcord to allow the cable jacket to be opened without using a cutter. IMSA specification 19-1 will not be acceptable. Provide a cable jacket labeled with the IMSA specification number and provide conductors constructed of stranded copper.

3. TRAFFIC SIGNAL SUPPORTS

3.1. METAL TRAFFIC SIGNAL SUPPORTS – ALL POLES

A. General:

Furnish and install metal poles with mast arms, grounding systems, and all necessary hardware. The work covered by this special provision includes requirements for the design, fabrication, and installation of both standard and custom/site specifically designed metal traffic signal supports and associated foundations.

Provide metal traffic signal support systems that contain no guy assemblies, struts, or stay braces. Provide designs of completed assemblies with hardware that equals or exceeds AASHTO *Standard Specifications for Structural Supports for Highway Signs, Luminaires and Traffic Signals* 5th Edition, 2009 (hereafter called 5th Edition AASHTO), including the latest interim specifications. Provide assemblies with a round or near-round (18 sides or more) cross-section, or a multi sided cross section with no less than six sides. The sides may be straight, convex, or concave.

Pole heights shown on signal plans are estimated from available data for bid purposes. Prior to furnishing metal signal poles, use field measurements and adjusted cross-sections to determine whether pole heights are sufficient to obtain required clearances. If pole heights are not sufficient, the Contractor should immediately notify the Engineer of the required revised pole heights.

Ensure that metal signal poles permit cables to be installed inside poles and any required mast arms. For holes in the poles and arms used to accommodate cables, provide full-circumference grommets. Arm flange plate wire access holes should be deburred, non grommeted, and oversized to fit around the 2" diameter grommeted shaft flange plate wire access hole.

After fabrication, have steel poles, required mast arms, and all parts used in the assembly hot-dip galvanized per section 1076. Design structural assemblies with weep holes large enough and properly located to drain molten zinc during galvanization process. Provide hot-dip galvanizing on structures that meets or exceeds ASTM Standard A-123. Provide galvanizing on hardware that meets or exceeds ASTM Standard A-153. Ensure that threaded material is brushed and retapped as necessary after galvanizing. Perform repair of damaged galvanizing that complies with the following:

Repair of Galvanizing .....Article 1076-7

Standard Drawings for Metal Poles are available that supplement these project special provisions. These drawings are located on the Department's website:

https://connect.ncdot.gov/resources/safety/pages/ITS-Design-Resources.aspx

Comply with article 1098-1B of the *2012 STANDARD SPECIFICATIONS FOR ROADS & STRUCTURES*, hereinafter referred to as the *Standard Specifications* for submittal requirements. Furnish shop drawings for approval. Provide the copies of detailed shop drawings for each type of

structure as summarized below. Ensure that shop drawings include material specifications for each component and identify welds by type and size on the drawing details, not in table format. **Do not release structures for fabrication until shop drawings have been approved by NCDOT.** Provide an itemized bill of materials for all structural components and associated connecting hardware on the drawings.

Comply with article 1098-1A of the *Standard Specifications* for Qualified Products List (QPL) submittals. All shop drawings must include project location description, signal inventory number(s) and a project number or work order number on the drawings.

Summary of information required for metal pole review submittal:

Item	**Hardcopy Submittal**	**Electronic Submittal**	**Comments / Special Instructions**
Sealed, Approved Signal Plan/Loading Diagram	1	1	All structure design information needs to reflect the latest approved signal plans
Custom Pole Shop Drawings	4 sets	1 set	Submit drawings on 11" x 17" format media Show NCDOT inventory number(s) in or above the title block
Standard Pole Shop Drawings (from the QPL)	4 sets	1 set	Submit drawings on 11" x 17" format media Show NCDOT inventory number(s) in or above the title block
Structure Calculations	1 set	1 set	Not required for Standard QPL Poles
Standard Pole Foundation Drawings	1 set	1 set	Submit drawings on 11" x 17" format media. Submit a completed Standard Foundation Selection form for each pole using foundation table on Metal Pole Drawing M-8.
Custom Foundation Drawings	4 sets	1 set	Submit drawings on 11" x 17" format media. If QPL Poles are used, include the corresponding QPL pole shop drawings with this submittal.
Foundation Calculations	1	1	**Submit LPile calculations per Section 11.4 of this specification.** Not required for Standard QPL Poles
Soil Boring Logs and Report	1	1	Report should include a location plan and a soil classification report including soil capacity, water level, hammer efficiency, soil bearing pressure, soil density, etc. for each pole.

NOTE – All shop drawings and custom foundation design drawings must be sealed by a Professional Engineer licensed in the state of North Carolina. All geotechnical information must be sealed by either a Professional Engineer or geologist licensed in the state of North Carolina. Include

a title block and revision block on the shop drawings and foundation drawings showing the NCDOT inventory number.

Shop drawings and foundation drawings may be submitted together or separately for approval. However, shop drawings must be approved before foundations can be reviewed. Foundation designs will be returned without review if the associated shop drawing has not been approved. Incomplete submittals will be returned without review.

B. Materials:

Fabricate metal pole and arm shaft from coil or plate steel to meet the requirements of ASTM A 595 Grade A tubes. For structural steel shapes, plates and bars use A572 Gr 50 min or ASTM A709 Gr 50 min. Provide pole and arm shafts that are round in cross section or multisided tubular shapes and have a uniform linear taper of 0.14 in/ft. Construct shafts from one piece of single ply plate or coil so there are no circumferential weld splices. Galvanize in accordance with AASHTO M 111 or an approved equivalent.

Use the submerged arc process or other NCDOT previously approved process suitable for pole shaft and arms to continuously weld pole shafts and arm shafts along their entire length. The longitudinal seam weld will be finished flush to the outside contour of the base metal. Ensure shafts have no circumferential welds except at the lower end joining the shaft to the pole base and arm base. Provide welding that conforms to Article 1072-18 of the *Standard Specifications*, except that no field welding on any part of the pole will be permitted unless approved by a qualified engineer.

Refer to Metal Pole Standard Drawing Sheets M2 through M5 for fabrication details. Fabricate anchor bases from plate steel meeting, as a minimum, the requirements of ASTM A 36M or cast steel meeting the requirements of ASTM A 27M Grade 485-250, AASHTO M270 Gr 36 or an approved equivalent. Conform to the applicable bolt pattern and orientation as shown on Metal Pole Standard Drawing Sheet M2.

Ensure all hardware is galvanized steel or stainless steel. The Contractor is responsible for ensuring that the designer/fabricator specifies connecting hardware and/or materials that do not create a dissimilar metal corrosive reaction.

Provide a minimum of four (4) 1-1/2" diameter high strength bolts for connection between arm plate and pole plate. Increase number of bolts to six (6) 1-1/2" diameter high strength bolts when arm lengths are greater than 50'-0" long.

Unless otherwise required by the design, ensure each anchor rod is 2" diameter and 60" length. Provide 10" minimum thread projection at the top of the rod, and 8" minimum at the bottom of the rod. Use anchor rod assembly and drilled pier foundation materials that meet the *Foundations and Anchor Rod Assemblies for Metal Poles* provision.

For each structural bolt and other steel hardware, hot dip galvanizing shall conform to the requirements of AASHTO M 232 (ASTM A 153). Ensure end caps for poles or mast arms are constructed of cast aluminum conforming to Aluminum Alloy 356.0F.

Provide a circular anchor bolt lock plate that will be secured to the anchor bolts at the embedded end with 2 washers and 2 nuts. Provide a base plate template that matches the bolt circle diameter of the anchor bolt lock plate. Construct plates and templates from ¼" minimum thick steel with a minimum width of 4". Galvanizing is not required for both plates.

Provide 4 heavy hex nuts and 4 flat washers for each anchor bolt. For nuts, use AASHTO M291 grade 2H, DH, or DH3 or equivalent material. For flat washers, use AASHTO M293 or equivalent material.

C. Construction Methods:

Erect signal support poles only after concrete has attained a minimum allowable compressive strength of 3000 psi. Install anchor rod assemblies in accordance with the *Foundations and Anchor Rod Assemblies for Metal Poles* provision.

For further construction methods, see construction methods for Metal Pole with Mast Arm.

Connect poles to grounding electrodes and bond them to the electrical service grounding electrodes.

For holes in the poles used to accommodate cables, install grommets before wiring pole or arm. Do not cut or split grommets.

Attach the terminal compartment cover to the pole by a sturdy chain or cable. Ensure the chain or cable is long enough to permit the cover to hang clear of the compartment opening when the cover is removed, and is strong enough to prevent vandalism. Ensure the chain or cable will not interfere with service to the cables in the pole base.

Attach cap to pole with a sturdy chain or cable. Ensure the chain or cable is long enough to permit the cap to hang clear of the opening when the cap is removed.

Perform repair of damaged galvanizing that complies with the *Standard Specifications*, Article 1076-7 "Repair of Galvanizing."

Install galvanized wire mesh around the perimeter of the base plate to cover the gap between the base plate and top of foundation for debris and pest control.

Install a ¼" thick plate for concrete foundation tag to include: concrete grade, depth, diameter, and reinforcement sizes of the installed foundation.

3.2. METAL STRAIN POLE

A. Materials:

Provide either steel or aluminum poles as indicated on the plans.

Comply with the following for Aluminum Poles:

- Have poles fabricated from Aluminum Association Alloy 6061-T6, 6063-T6, or approved equivalent. The structural requirement does not pertain to castings that are decorative only.
- Have shafts tapered by spinning and cold-working a seamless extruded tube of the aluminum alloy.
- Have shafts with no circumferential welds except at the lower end joining the shaft to the base.
- Ensure aluminum poles are properly protected from damage prior to shipment.

- Have bases of the shaft fabricated in accordance with the Aluminum Association Alloy 356.0-T6, and of adequate strength, shape and size, and capable of withstanding the design load of the shaft.
- Have aluminum surfaces in contact with concrete or dissimilar metal coated with bituminous paint.

Comply with the following for Steel Poles:

- Have shafts of the tapered tubular type and fabricated of steel conforming to ASTM A-595 Grade A or an approved equivalent.
- Have galvanization in accordance with AASHTO M 111 or an approved equivalent.
- Have shafts that are continuously welded for the entire length by the submerged arc process, and with exposed welds ground or rolled smooth and flush with the base metal. Provide welding that conforms to Article 1072-18 per *Standard Specification* except that no field welding on any part of the pole will be permitted.
- Have anchor bases for steel poles fabricated from plate steel meeting as a minimum the requirements of ASTM A 36M or cast steel meeting the requirements of ASTM A 27M Grade 485-250 or an approved equivalent.

For each strain pole, provide 2 messenger cable (span wire) clamps and associated hardware for attachment of support cable of the messenger cable suspension. Ensure that diameter of the clamp is appropriate to its location on the pole and that the diameter of the clamps is appropriately designed to be adjustable from 1'-6" below the top, down to 6'-6" below the top of the pole. Do not attach more than one support cable to a messenger cable clamp.

For strain poles, provide a minimum of three (3) 2 inch (50 mm) holes equipped with an associated coupling and weatherhead on the messenger cable load side of the pole to accommodate passage of signal cables from inside the pole to the suspension. Provide galvanized threaded plugs for all unused couplings at pole entrance points. Refer to Metal Pole Standard Drawing Sheet M3 for fabrication details.

Provide a grounding lug(s) in the approximate vicinity of the messenger cable clamp for bonding and grounding messenger cable. Lugs must accept #4 or #6 AWG wire to bond messenger cables to the pole in order to provide an effective ground fault circuit path. Refer to Metal Pole Standard Drawing Sheet M6 for construction details.

Have poles permanently stamped above the hand holes with the identification tag details as shown on Metal Pole Standard Drawing Sheet M2.

Provide liquid tight flexible metal conduit (Type LFMC), liquid tight flexible nonmetallic conduit (Type LFNC), high density polyethylene conduit (Type HDPE), or approved equivalent to isolate conductors feeding luminaires.

Fabricate poles from a single piece of steel or aluminum with single line seam weld with no transverse butt welds. Fabrication of two ply pole shafts is unacceptable with the exception of fluted shafts. Provide tapers for all shafts that begin at base and that have diameters which decrease uniformly at the rate of not more than 0.14 inch per foot (11.7 millimeters per meter) of length.

Ensure that allowable pole deflection does not exceed that allowed per 5th Edition AASHTO. For messenger cable poles (with primarily transverse loads), ensure that maximum deflection at the

top of the pole does not exceed 2.5 percent of the pole height. For mast arm poles (with primarily moment loads), ensure that maximum angular rotation of the top of the pole does not exceed 1° 40'.

Provide four anchor nuts and four washers for each anchor bolt. Ensure that anchor bolts have required diameters, lengths, and positions, and will develop strengths comparable to their respective poles.

Provide a terminal compartment with cover and screws in each pole that encompasses the hand hole and contains a 12-terminal barrier type terminal block. Provide two terminal screws with a removable shorting bar between them for each termination. Furnish terminal compartment covers attached to the pole by a sturdy chain or cable approved by the Engineer. Ensure that the chain or cable is long enough to permit the cover to hang clear of the compartment opening when the cover is removed, and is strong enough to prevent vandals from being able to disconnect the cover from the pole. Ensure that the chain or cable will not interfere with service to the cables in the pole base.

Install grounding lugs that will accept #4 or #6 AWG wire to electrically bond messenger cables to the pole. Refer to Metal Pole Standard Drawing Sheet M6 for construction details.

For each pole, provide a 1/2 inch minimum thread diameter, coarse thread stud and nut for grounding which will accommodate #6 AWG ground wire. Ensure that the lug is electrically bonded to the pole and is conveniently located inside the pole at the hand hole.

Provide a removable pole cap with stainless steel attachment screws for the top of each pole. Ensure that the cap is cast aluminum conforming to Aluminum Association Alloy 356.0F. Furnish cap attached to the pole with a sturdy chain or cable approved by the Engineer. Ensure that the chain or cable is long enough to permit the cap to hang clear of the pole-top opening when the cap is removed.

When required by the plans, furnish couplings 42 inches above the bottom of the base for mounting of pedestrian pushbuttons. Provide mounting points consisting of 1-1/2 inch internally threaded half-couplings that comply with the NEC and that are mounted within the poles. Ensure that couplings are essentially flush with the outside surfaces of the poles and are installed before any required galvanizing. Provide a threaded plug in each mounting point. Ensure that the surface of the plug is essentially flush with the outer end of the mounting point when installed and has a recessed hole to accommodate a standard wrench.

B. Construction Methods:

Install metal poles, hardware, and fittings as shown on the manufacturer's installation drawings. Install metal poles so that when the pole is fully loaded it is within 2 degrees of vertical. Install poles with the manufacturer's recommended "rake." Use threaded leveling nuts to establish rake if required.

3.3. METAL POLE WITH MAST ARM

Provide signal support mast arm assemblies. Comply with the previous Section – Metal Strain Pole – except as noted herein.

Provide pole plates and associated gussets and fittings for attachment of required mast arms. As part of each mast arm attachment, provide a cable passage hole in the pole to allow passage of signal cables from the pole to the arm.

Ensure that allowable mast arm deflection does not exceed that allowed per 5th Edition AASHTO. Also when arm is fully loaded, tip of the arm shall not go below the arm attachment point with the pole for all load conditions per 5th Edition AASHTO.

Furnish all arm plates and necessary attachment hardware, including bolts and brackets.

Provide two extra bolts for each arm.

Provide grommet holes on the arms to accommodate cables for the signals.

Provide arms with weatherproof connections for attaching to the shaft of the pole.

Provide hardware that is galvanized steel, stainless steel, or corrosive-resistant aluminum.

Provide a removable end cap with stainless steel attachment screws for the end of each mast arm. Ensure that the cap is cast aluminum conforming to Aluminum Association Alloy 356.0F. Furnish cap attached to the arm with a sturdy chain or cable approved by the Engineer. Ensure that the chain or cable is long enough to permit the cap to hang clear of the arm end opening when the cap is removed.

Comply with the following for Aluminum Arms:

- Conform to Aluminum Association Alloy 6061-T6, 6063-T6 or approved equivalent.
- Conform to the welding requirements of the aluminum poles.
- Have satin brush finished and furnish individually wrapped.

Comply with the following for Steel Luminaire Arms:

- In addition to tapered tube, luminaire arms may be standard weight black steel pipe conforming to ASTM A 53-90a, Type E or Type S, Grade B or an approved equivalent.
- Conform to the welding requirements of the steel poles.
- After all fabricating, cutting, punching, and welding are completed, luminaire arms should be hot-dipped galvanized inside and outside.
- In accordance with the National Electrical Code (NEC) Article 230.2(E), provide identification of the electrical source provider for the luminaire feeder circuit with contact information on a permanent label located in the pole hand hole in the vicinity of the feeder circuit raceway.

A. Materials:

Fabrication of two ply pole shafts and arms is unacceptable with the exception of fluted members.

After all fabricating, cutting, punching, and welding are completed, hot-dip galvanize the structure in accordance with the AASHTO M 111 or an approved equivalent.

B. Construction Methods:

Install horizontal-type arms with sufficient manufactured rise to keep arm from deflecting below the arm attachment height.

Attach cap to the mast arm with a sturdy chain or cable. Ensure that the chain or cable is long enough to permit the cap to hang clear of the arm opening when the cap is removed.

For mast arm poles, use full penetration welds with back-up ring at the pole base and at the arm base connection.

3.4. DRILLED PIER FOUNDATIONS FOR METAL TRAFFIC SIGNAL POLES

Analysis procedures and formulas shall be based on AASHTO, ACI code and per FHWA manuals. Design methods based on engineering publications or research papers needs to have prior approval from NCDOT. The Department reserves the right to accept or disapprove any method used for the analysis.

Use a Factor of Safety of 1.33 for torsion and 2.0 for bending for the foundation design.

Foundation design for lateral load shall not exceed 1" lateral deflection at top of foundation.

Design all custom foundations to carry the maximum capacity of each metal pole. For standard case strain poles only, if a custom foundation is designed, use the actual moment reactions from the Standard Foundation Selection Table shown on Standard Drawing No. M8.

To prevent design of oversized drilled shafts or other foundation types, do not use mast arm lengths exceeding 50'-0" and refrain from using dual mast arms, when installing new mast arm structures east of US Route 17.

When poor soil conditions are encountered which could create an excessively large foundation design, consideration may be given to allowing an exemption to the maximum capacity design. The contractor must gain approval from the engineer before reducing a foundation's capacity. On projects where poor soil is known to be present, it is advisable that the contractor consider getting foundations approved before releasing poles for fabrication.

Have the contractor notify the engineer if the proposed foundation is to be installed on a slope other than 8H: 1V or flatter.

A. Description:

Furnish and install foundations for NCDOT metal poles with all necessary hardware in accordance with the plans and specifications.

Metal Pole Standards have been developed and implemented by NCDOT for use at signalized intersections in North Carolina. If the plans call for a standard pole, then a standard foundation may be selected from the plans. However, the Contractor is not required to use a standard foundation. If the Contractor chooses to design a non-standard site-specific foundation for a standard pole or if the plans call for a non-standard site-specific pole, design the foundation to conform to the applicable provisions in the NCDOT Metal Pole Standards and Section B4 (Non-Standard Foundation Design) below. If non-standard site specific foundations are designed for standard QPL approved strain poles, the foundation designer must use the design moment specified by load case on Metal Pole Standard Drawing Sheet M8. Failure to conform to this requirement will be grounds for rejection of the design.

If the Contractor chooses to design a non-standard foundation for a standard pole and the soil test results indicate a standard foundation is feasible for the site, the Contractor will be paid the cost of the standard foundation (drilled pier and wing wall, if applicable). Any additional costs associated with a non-standard site-specific foundation including additional materials, labor and equipment will be considered incidental to the cost of the standard foundation. All costs for the non-standard foundation design will also be considered incidental to the cost of the standard foundation.

B. Soil Test and Foundation Determination:

1. General:

Drilled piers are reinforced concrete sections, cast-in-place against in situ, undisturbed material. Drilled piers are of straight shaft type and vertical.

Some standard drilled piers for supporting poles with mast arms may require wing walls to resist torsional rotation. Based upon this provision and the results of the required soil test, a drilled pier length and wing wall requirement may be determined and constructed in accordance with the plans.

For non-standard site-specific poles, the contractor-selected pole fabricator will determine if the addition of wing walls is necessary for the supporting foundations.

2. Soil Test:

Perform a soil test at each proposed metal pole location. Complete all required fill placement and excavation at each signal pole location to finished grade before drilling each boring. Soil tests performed that are not in compliance with this requirement may be rejected and will not be paid. Drill one boring to a depth of 26 feet within a 25 foot radius of each proposed foundation.

Perform standard penetration tests (SPT) in accordance with ASTM D 1586 at depths of 1, 2.5, 5, 7.5, 10, 15, 20 and 26 feet. Discontinue the boring if one of the following occurs:

- A total of 100 blows have been applied in any 2 consecutive 6-in. intervals.
- A total of 50 blows have been applied with < 3-in. penetration.

Describe each intersection as the "Intersection of *(Route or SR #)*, *(Street Name)* and *(Route or SR #)*, *(Street Name)*, _____ County, Signal Inventory No. _____". Label borings with "B- *N, S, E, W, NE, NW, SE or SW*" corresponding to the quadrant location within the intersection. Pole numbers should be made available to the Drill Contractor. Include pole numbers in the boring label if they are available. If they are not available, ensure the boring labels can be cross-referenced to corresponding pole numbers. For each boring, submit a legible (hand written or typed) boring log signed and sealed by a licensed Geologist or Professional Engineer registered in North Carolina. Include on each boring the SPT blow counts and N-values at each depth, depth of the boring, hammer efficiency and a general description of the soil types encountered.

3. Standard Foundation Determination:

Use the following method for determining the Design N-value:

$$N_{AVG} = \frac{(N@1' + N@2.5' + \ldots\ldots\ldots N@\text{Deepest Boring Depth})}{\text{Total Number of N-values}}$$

$$Y = (N@1')^2 + (N@2.5')^2 + \ldots\ldots\ldots (N@\text{Deepest Boring Depth})^2$$

$$Z = (N@1' + N@2.5' + \ldots\ldots\ldots N@\text{Deepest Boring Depth})$$

$$N_{STD\ DEV} = \left(\frac{(\text{Total Number of N-values} \times Y) - Z^2}{(\text{Total Number of N-values}) \times (\text{Total Number of N-values} - 1)} \right)^{0.5}$$

Design N-value equals lesser of the following two conditions:

$N_{AVG} - (N_{STD\ DEV} \times 0.45)$

Or

$$\text{Average of First Four N-Values} = \frac{(N@1' + N@2.5' + N@5' + N@7.5')}{4}$$

Note: If less than 4 N-values are obtained because of criteria listed in Section 2 above, use average of N-values collected for second condition. Do not include the N-value at the deepest boring depth for above calculations if the boring is discontinued at or before the required boring depth because of criteria listed in Section 2 above. Use N-value of zero for weight of hammer or weight of rod. If N-value is greater than 50, reduce N-value to 50 for calculations.

If standard NCDOT strain poles are shown on the plans and the Contractor chooses to use standard foundations, determine a drilled pier length, "L," for each signal pole from the Standard Foundations Chart (sheet M 8) based on the Design N-value and the predominant soil type. For each standard pole location, submit a completed "Metal Pole Standard Foundation Selection Form" signed by the Contractor's representative. Signature on form is for verification purposes only. Include the Design N-value calculation and resulting drilled pier length, "L," on each form.

If non-standard site-specific poles are shown on the plans, submit completed boring logs collected in accordance with Section 2 (Soil Test) above along with pole loading diagrams from the plans to the contractor-selected pole fabricator to assist in the pole and foundation design.

If one of the following occurs, the Standard Foundations Chart shown on the plans may not be used and a non-standard foundation may be required. In such case, contact the Engineer.

- The Design N-value is less than 4.
- The drilled pier length, "L", determined from the Standard Foundations Chart, is greater than the depth of the corresponding boring.

In the case where a standard foundation cannot be used, the Department will be responsible for the additional cost of the non-standard foundation.

Foundation designs are based on level ground around the traffic signal pole. If the slope around the edge of the drilled pier is steeper than 8:1 (H:V) or the proposed foundation will be less than 10 feet from the top of an embankment slope, the Contractor is responsible for providing slope information to the foundation designer and to the Engineer so it can be considered in the design.

The "Metal Pole Standard Foundation Selection Form" may be found at:

http://www.ncdot.gov/doh/preconstruct/highway/geotech/formdet/misc/MetalPole.pdf

If assistance is needed, contact the Engineer.

4. Non-Standard Foundation Design:

Design non-standard foundations based upon site-specific soil test information collected in accordance with Section 2 (Soil Test) above. Design drilled piers for side resistance only in accordance with Section 4.6 of the *AASHTO Standard Specifications for Highway Bridges*. Use the computer software LPILE version 5.0 or later manufactured by Ensoft, Inc. to analyze drilled piers.

Use the computer software gINT version 8.0 or later manufactured by Bentley Systems, Inc. with the current NCDOT gINT library and data template to produce SPT boring logs. Provide a drilled pier foundation for each pole with a length and diameter that result in a horizontal lateral movement of less than 1 inch at the top of the pier and a horizontal rotational movement of less than 1 inch at the edge of the pier. Contact the Engineer for pole loading diagrams for standard poles to be used for non-standard foundation designs. Submit any non-standard foundation designs including drawings, calculations, and soil boring logs to the Engineer for review and approval before construction.

C. Drilled Pier Construction:

Construct drilled pier foundations in accordance with the *Foundations and Anchor Rod Assemblies for Metal Poles* provision.

3.5. CUSTOM DESIGN OF TRAFFIC SIGNAL SUPPORTS

A. General:

Design traffic signal supports with foundations consisting of metal poles with mast arms.

The lengths of the metal signal poles shown on the plans are estimated from available data for bid purposes. Determine the actual length of each pole from field measurements and adjusted cross-sections. Furnish the revised pole heights to the Engineer. Use all other dimensional requirements shown on the plans.

Ensure each pole includes an identification tag with information and location positions as defined on Metal Pole Standard Drawing Sheets M2, M3 and M4. All pole shaft tags must include the NCDOT Inventory number followed by the pole number shown on the traffic signal or ITS (non-signalized locations) plan.

Design all traffic signal support structures using the following 5th Edition AASHTO specifications:

- Design for a 50 year service life as recommended by Table 3-3.
- Use the wind pressure map developed from 3-second gust speeds, as provided in Article 3.8.
- Ensure signal support structures include natural wind gust loading and truck-induced gust loading in the fatigue design, as provided for in Articles 11.7.3 and 11.7.4, respectively. Designs need not consider periodic galloping forces.
- Assume the natural wind gust speed in North Carolina is 11.2 mph. For natural wind fatigue stress calculations, utilize a drag coefficient (C_d) computed for 11.2 mph wind velocity and not the basic wind speed velocity.
- Design for Category II fatigue, as provided for in Article 11.6, unless otherwise specified.
- Calculate all stresses using applicable equations from Section 5. The Maximum allowable stress ratios for all signal support designs are 0.9.
- Conform to article 10.4.2 and 11.8 for all deflection requirements.

Ensure that the design permits cables to be installed inside poles and mast arms.

Unless otherwise specified by special loading criteria, the computed surface area for ice load on signal heads is:

- 3-section, 12-inch, Surface area: 26.0 ft^2 (17.0 ft^2 without back plate)

- 4-section, 12-inch, Surface area: 32.0 ft^2 (21.0 ft^2 without back plate)
- 5-section, 12-inch, Surface area: 42.0 ft^2 (29.0 ft^2 without back plate)

The ice loading for signal heads defined above includes the additional surface area that back plates will induce. Special loading criteria may be specified in instances where back plates will not be installed on signal heads. Refer to the Loading Schedule on each Metal Pole Loading Diagram for revised signal head surface areas. The pole designer should revise ice loads accordingly in this instance. Careful examination of the plans when this is specified is important as this may impact sizing of the metal support structure and foundation design which could affect proposed bid quotes. All maximum stress ratios of 0.9 still apply.

Assume the combined minimum weight of a messenger cable bundle (including messenger cable, signal cable and detector lead-in cables) is 1.3 lbs/ft. Assume the combined minimum diameter of this cable bundle is 1.3 inches.

Ensure that designs provide a removable pole cap with stainless steel attachment screws for each pole top and mast arm end.

B. Metal Poles:

Submit design drawings for approval including pre-approved QPL pole drawings. Show all the necessary details and calculations for the metal poles including the foundation and connections. Include signal inventory number on design drawings. Include as part of the design calculations the ASTM specification numbers for the materials to be used. Provide the types and sizes of welds on the design drawings. Include a Bill of Materials on design drawings. Ensure design drawings and calculations are signed, dated, and sealed by the responsible professional engineer licensed in the state of North Carolina. Immediately bring to the attention of the Engineer any structural deficiency that becomes apparent in any assembly or member of any assembly as a result of the design requirements imposed by these specifications, the plans, or the typical drawings. Said Professional Engineer is wholly responsible for the design of all poles and arms. Review and acceptance of these designs by the Department does not relieve the said Professional Engineer of his responsibility. Do not fabricate the assemblies until receipt of the Department's approval of the design drawings.

For mast arm poles, provide designs with provisions for pole plates and associated gussets and fittings for mast arm attachment. As part of each mast arm attachment, provide a grommeted 2" diameter hole on the shaft side of the connection to allow passage of the signal cables from the pole to the arm.

Where ice is present, assume wind loads as shown in Figure 3-5 of the 5th Edition AASHTO Specification for Group III loading.

Provide a grounding lug(s) in the approximate vicinity of the messenger cable clamp for bonding and grounding messenger cable. Lugs must accept #4 or #6 AWG wire to bond messenger cables to the pole in order to provide an effective ground fault circuit path. Refer to Metal Pole Standard Drawing Sheet M6 for construction details.

Design tapers for all pole shafts that begin at the base with diameters that decrease uniformly at the rate of 0.14 inch per foot of length.

Design a base plate on each pole. The minimum base plate thickness for all poles is determined by the following criteria:

Case 1 Circular or rectangular solid base plate with the upright pole welded to the top surface of base plate with full penetration butt weld, and where no stiffeners are provided. A base plate with a small center hole, which is less than 1/3 of the upright diameter, and located concentrically with the upright pole, may be considered as a solid base plate.

The magnitude of bending moment in the base plate, induced by the anchoring force of each anchor bolt is $M = (P \times D_1) / 2$, where:

M = bending moment at the critical section of the base plate induced by one anchor bolt

P = anchoring force of each anchor bolt

D_1 = horizontal distance between the anchor bolt center and the outer face of the upright, or the difference between the bolt circle radius and the outside radius of the upright

Locate the critical section at the face of the anchor bolt and perpendicular to the bolt circle radius. The overlapped part of two adjacent critical sections is considered ineffective.

Case 2 Circular or rectangular base plate with the upright pole socketed into and attached to the base plate with two lines of fillet weld, and where no stiffeners are provided, or any base plate with a center hole that is larger in diameter than 1/3 of the upright diameter.

The magnitude of bending moment induced by the anchoring force of each anchor bolt is $M = P \times D_2$,

where: P = anchoring force of each anchor bolt

D_2 = horizontal distance between the face of the upright and the face of the anchor bolt nut

Locate the critical section at the face of the anchor bolt top nut and perpendicular to the radius of the bolt circle. The overlapped part of two adjacent critical sections is considered ineffective.

If the base plate thickness calculated for Case 2 is less than Case 1, use the thickness calculated for Case 1.

The following additional owner requirements apply concerning pole base plates.

- Ensure that whichever case governs as defined above, the anchor bolt diameter is set to match the base plate thickness. If the minimum diameter required for the anchor bolt exceeds the thickness required for the base plate, set the base plate thickness equal to the required bolt diameter.
- For dual mast arm supports, or for single mast arm supports 50' or greater, use a minimum 8 bolt orientation with 2" diameter anchor bolts, and a 2" thick base plate.
- For all metal poles with mast arms, use a full penetration groove weld with a backing ring to connect the pole upright component to the base. Refer to Metal Pole Standard Drawing Sheet M4.

Ensure that designs have anchor bolt holes with a diameter 1/4 inch larger than the anchor bolt diameters in the base plate.

Ensure that the anchor bolts have the required diameters, lengths, and positions, and will develop strengths comparable to their respective poles.

Provide designs with a 6 x 12-inch hand hole with a reinforcing frame for each pole.

Provide designs with a terminal compartment with cover and screws in each pole that encompasses the hand hole and contains provisions for a 12-terminal barrier type terminal block.

For each pole, provide designs with provisions for a 1/2 inch minimum thread diameter, coarse thread stud and nut for grounding which will accommodate a #6 AWG ground wire. Ensure the lug is electrically bonded to the pole and is conveniently located inside the pole at the hand hole.

When required, design couplings on the pole for mounting pedestrian pushbuttons at a height of 42 inches above the bottom of the base. Provide mounting points consisting of 1-1/2 inch internally threaded half-couplings that comply with the NEC that are mounted within the poles. Ensure the couplings are essentially flush with the outside surfaces of the poles and are installed before any required galvanizing. Provide a threaded plug for each half coupling. Ensure that the surface of the plug is essentially flush with the outer end of the mounting point when installed and has a recessed hole to accommodate a standard wrench.

C. Mast Arms:

Design all arm plates and necessary attachment hardware, including bolts and brackets as required by the plans.

Design for grommeted holes on the arms to accommodate the cables for the signals if specified.

Design arms with weatherproof connections for attaching to the shaft of the pole.

Always use a full penetration groove weld with a backing ring to connect the mast arm to the pole. Refer to Metal Pole Standard Drawing Sheet M5.

Capacity of tapped flange plate must be sufficient to develop the full capacity of the connecting bolts. In all cases the flange plate of both arm and shaft must be at least as thick as the arm connecting bolts are in diameter.

3.6. POLE NUMBERING SYSTEM

Attach an identification tag to each pole shaft and mast arm section as shown on Metal Pole Standard Drawing Sheet M2 "Typical Fabrication Details Common To All Metal Poles".

3.7. MEASUREMENT AND PAYMENT

Actual number of metal poles with dual mast arms furnished, installed, and accepted.

Actual number of soil tests with SPT borings drilled furnished and accepted.

Actual volume of concrete poured in cubic yards of drilled pier foundation furnished, installed and accepted.

Actual number of designs for mast arms with metal poles furnished and accepted.

No measurement will be made for foundation designs prepared with metal pole designs, as these will be considered incidental to designing signal support structures.

Payment will be made under:

Metal Pole with Dual Mast Arm ..... Each
Soil Test ..... Each
Drilled Pier Foundation ..... Cubic Yard
Mast Arm with Metal Pole Design ..... Each

4. CONTROLLERS WITH CABINETS

4.1. MATERIALS – TYPE 2070L CONTROLLERS

Conform to CALTRANS *Transportation Electrical Equipment Specifications* (TEES) (dated August 16, 2002, plus Errata 1 dated October 27, 2003 and Errata 2 dated June 08, 2004) except as required herein.

Furnish Model 2070L controllers. Ensure that removal of the CPU module from the controller will place the intersection into flash.

The Department will provide software at the beginning of the burning-in period. Contractor shall give 5 working days notice before needing software. Program software provided by the Department.

Provide model 2070L controllers with the latest version of OS9 operating software and device drivers, composed of the unit chassis and at a minimum the following modules and assemblies:

- MODEL 2070 1B, CPU Module, Single Board
- MODEL 2070-2A, Field I/O Module (FI/O)
  - Note: Configure the Field I/O Module to disable both the External WDT Shunt/Toggle Switch and SP3 (SP3 active indicator is "off")
- MODEL 2070-3B, Front Panel Module (FP), Display B (8x40)
- MODEL 2070-4A, Power Supply Module, 10 AMP
- MODEL 2070-7A, Async Serial Com Module (9-pin RS-232)

Furnish one additional MODEL 2070-7A, Async Serial Com Module (9-pin RS-232) for all master controller locations.

4.2. MATERIALS – GENERAL CABINETS

Provide a moisture resistant coating on all circuit boards.

Provide one 20 mm diameter radial lead UL-recognized metal oxide varistor (MOV) between each load switch field terminal and equipment ground. Electrical performance is outlined below.

PROPERTIES OF MOV SURGE PROTECTOR	
Maximum Continuous Applied Voltage at 185° F	150 VAC (RMS) 200 VDC
Maximum Peak 8x20µs Current at 185° F	6500 A
Maximum Energy Rating at 185° F	80 J
Voltage Range 1 mA DC Test at 77° F	212-268 V
Max. Clamping Voltage 8x20µs, 100A at 77° F	395 V
Typical Capacitance (1 MHz) at 77° F	1600 pF

Provide a power line surge protector that is a two-stage device that will allow connection of the radio frequency interference filter between the stages of the device. Ensure that a maximum continuous current is at least 10A at 120V. Ensure that the device can withstand a minimum of 20 peak surge current occurrences at 20,000A for an 8x20 microsecond waveform. Provide a maximum clamp voltage of 395V at 20,000A with a nominal series inductance of 200µh. Ensure that the voltage does not exceed 395V. Provide devices that comply with the following:

Frequency (Hz)	Minimum Insertion Loss (dB)
60	0
10,000	30
50,000	55
100,000	50
500,000	50
2,000,000	60
5,000,000	40
10,000,000	20
20,000,000	25

4.3. MATERIALS – TYPE 170E CABINETS

A. Type 170 E Cabinets General:

Conform to the city of Los Angeles' Specification No. 54-053-08, *Traffic Signal Cabinet Assembly Specification* (dated July 2008), except as required herein.

Furnish model 332 base mounted cabinets configured for 8 vehicle phases, 4 pedestrian phases, and 6 overlaps. When overlaps are required, provide auxiliary output files for the overlaps. Do not reassign load switches to accommodate overlaps unless shown on electrical details.

Provide model 200 load switches, model 222 loop detector sensors, model 252 AC isolators, and model 242 DC isolators according to the electrical details. As a minimum, provide one (1) model 2018 conflict monitor, one (1) model 206L power supply unit, two (2) model 204 flashers, one (1) DC isolator (located in slot I14), and four (4) model 430 flash transfer relays (provide seven (7) model 430 flash transfer relays if auxiliary output file is installed) with each cabinet.

B. Type 170 E Cabinet Electrical Requirements:

Provide a cabinet assembly designed to ensure that upon leaving any cabinet switch or conflict monitor initiated flashing operation, the controller starts up in the programmed start up phases and start up interval.

Furnish two sets of non-fading cabinet wiring diagrams and schematics in a paper envelope or container and placed in the cabinet drawer.

All AC+ power is subject to radio frequency signal suppression.

Provide surge suppression in the cabinet for each type of cabinet device. Provide surge protection for the full capacity of the cabinet input file. Provide surge suppression devices that operate properly over a temperature range of -40° F to +185° F. Ensure the surge suppression devices provide both common and differential modes of protection.

Provide a pluggable power line surge protector that is installed on the back of the PDA (power distribution assembly) chassis to filter and absorb power line noise and switching transients. Ensure the device incorporates LEDs for failure indication and provides a dry relay contact closure for the purpose of remote sensing. Ensure the device meets the following specifications:

Peak Surge Current (Single pulse, 8x20µs).....20,000A
Occurrences (8x20µs waveform).....10 minimum @ 20,000A
Maximum Clamp Voltage.....395VAC
Operating Current.....15 amps
Response Time.....< 5 nanoseconds

Provide a loop surge suppressor for each set of loop terminals in the cabinet. Ensure the device meets the following specifications:

Peak Surge Current (6 times, 8x20µs)
(Differential Mode).....400A
(Common Mode).....1,000A
Occurrences (8x20µs waveform).....500 min @ 200A
Maximum Clamp Voltage
(Differential Mode @400A).....35V
(Common Mode @1,000A).....35V
Response Time.....< 5 nanoseconds
Maximum Capacitance.....35 pF

Provide a data communications surge suppressor for each communications line entering or leaving the cabinet. Ensure the device meets the following specifications:

Peak Surge Current (Single pulse, 8x20µs).....10,000A
Occurrences (8x20µs waveform).....100 min @ 2,000A
Maximum Clamp Voltage.....Rated for equipment protected
Response Time.....< 1 nanosecond
Maximum Capacitance.....1,500 pF
Maximum Series Resistance.....15Ω

Provide a DC signal surge suppressor for each DC input channel in the cabinet. Ensure the device meets the following specifications:

Peak Surge Current (Single pulse, 8x20µs).....10,000A
Occurrences (8x20µs waveform).....100 @ 2,000A

Maximum Clamp Voltage.....30V

Response Time.....< 1 nanosecond

Provide a 120 VAC signal surge suppressor for each AC+ interconnect signal input. Ensure the device meets the following specifications:

Peak Surge Current (Single pulse, 8x20µs).....20,000A

Maximum Clamp Voltage.....350VAC

Response Time.....< 200 nanoseconds

Discharge Voltage.....<200 Volts @ 1,000A

Insulation Resistance.....≥100 MΩ

Provide conductors for surge protection wiring that are of sufficient size (ampacity) to withstand maximum overcurrents which could occur before protective device thresholds are attained and current flow is interrupted.

If additional surge protected power outlets are needed to accommodate fiber transceivers, modems, etc., install a UL listed, industrial, heavy-duty type power outlet strip with a minimum rating of 15 A / 125 VAC, 60 Hz. Provide a strip that has a minimum of 3 grounded outlets. Ensure the power outlet strip plugs into one of the controller unit receptacles located on the rear of the PDA. Ensure power outlet strip is mounted securely; provide strain relief if necessary.

Provide a door switch in the front and a door switch in the rear of the cabinet that will provide the controller unit with a Door Ajar alarm when either the front or the rear door is open. Ensure the door switches apply DC ground to the Input File when either the front door or the rear door is open.

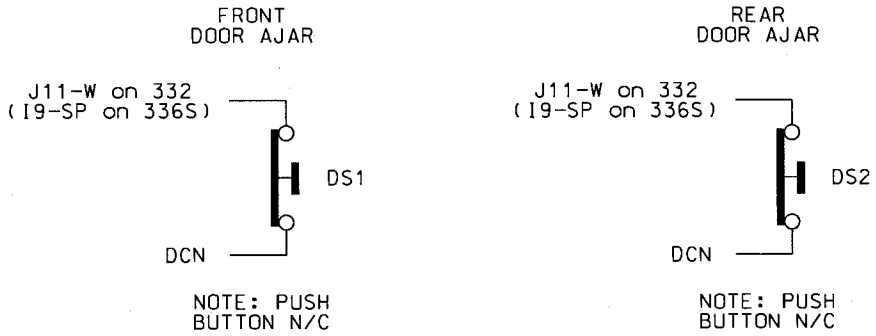

Furnish a fluorescent fixture in the rear across the top of the cabinet and another fluorescent fixture in the front across the top of the cabinet at a minimum. Ensure that the fixtures provide sufficient light to illuminate all terminals, labels, switches, and devices in the cabinet. Conveniently locate the fixtures so as not to interfere with a technician's ability to perform work on any devices or terminals in the cabinet. Provide a protective diffuser to cover exposed bulbs. Install 16 watt T-4 lamps in the fluorescent fixtures. Provide a door switch to provide power to each fixture when the respective door is open. Wire the fluorescent fixtures to the 15 amp ECB (equipment circuit breaker).

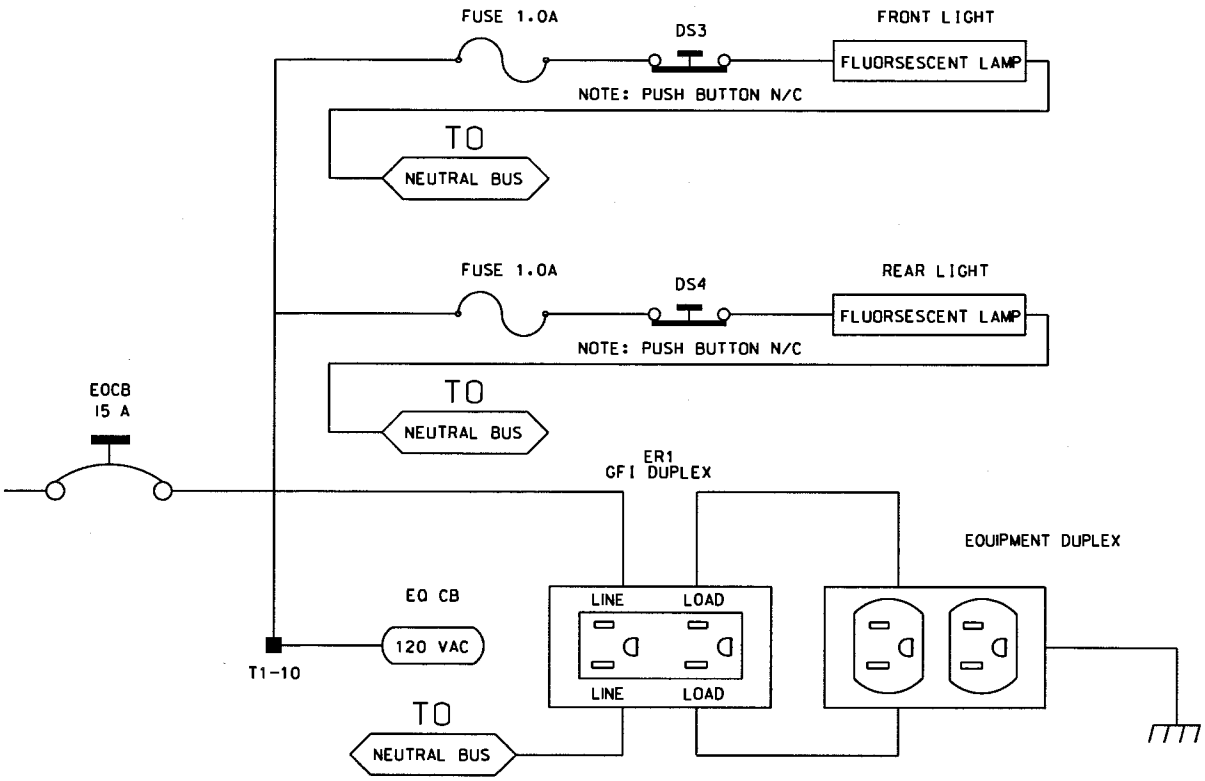

Furnish a police panel with a police panel door. Ensure that the police panel door permits access to the police panel when the main door is closed. Ensure that no rainwater can enter the cabinet even with the police panel door open. Provide a police panel door hinged on the right side as viewed from the front. Provide a police panel door lock that is keyed to a standard police/fire call box key. In addition to the requirements of LA Specification No. 54-053-08, provide the police panel with a toggle switch connected to switch the intersection operation between normal stop-and-go operation (AUTO) and manual operation (MANUAL). Ensure that manual control can be implemented using inputs and software such that the controller provides full programmed clearance times for the yellow clearance and red clearance for each phase while under manual control.

Provide a 1/4-inch locking phone jack in the police panel for a hand control to manually control the intersection. Provide sufficient room in the police panel for storage of a hand control and cord.

For model 332 base mounted cabinets, ensure terminals J14-E and J14-K are wired together on the rear of the Input File. Connect TB9-12 (J14 Common) on the Input Panel to T1-2 (AC-) on the rear of the PDA.

Provide detector test switches mounted at the top of the cabinet rack or other convenient location which may be used to place a call on each of eight phases based on the chart below. Provide three positions for each switch: On (place call), Off (normal detector operation), and Momentary On (place momentary call and return to normal detector operation after switch is released). Ensure that the switches are located such that the technician can read the controller display and observe the intersection.

Connect detector test switches for cabinets as follows:

332 Cabinet	
Detector Call Switches	**Terminals**
Phase 1	I1-W
Phase 2	I4-W
Phase 3	I5-W
Phase 4	I8-W
Phase 5	J1-W
Phase 6	J4-W
Phase 7	J5-W
Phase 8	J8-W

Provide the PCB 28/56 connector for the conflict monitor unit (CMU) with 28 independent contacts per side, dual-sided with 0.156 inch contact centers. Provide the PCB 28/56 connector contacts with solder eyelet terminations. Ensure all connections to the PCB 28/56 connector are soldered to the solder eyelet terminations.

Ensure that all cabinets have the CMU connector wired according to the 332 cabinet connector pin assignments (include all wires for auxiliary output file connection). Wire pins 13, 16, R, and U of the CMU connector to a separate 4 pin plug, P1, as shown below. Provide a second plug, P2, which will mate with P1 and is wired to the auxiliary output file as shown below. Provide an additional plug, P3, which will mate with P1 and is wired to the pedestrian yellow circuits as shown below. When no auxiliary output file is installed in the cabinet, provide wires for the green and yellow inputs for channels 11, 12, 17, and 18, the red inputs for channels 17 and 18, and the wires for the P2 plug. Terminate the two-foot wires with ring type lugs, insulated, and bundled for optional use.

	P1		P2		P3	
PIN	**FUNCTION**	**CONN TO**	**FUNCTION**	**CONN TO**	**FUNCTION**	**CONN TO**
1	CH-9G	CMU-13	OLA-GRN	A123	2P-YEL	114
2	CH-9Y	CMU-16	OLA-YEL	A122	4P-YEL	105
3	CH-10G	CMU-R	OLB-GRN	A126	6P-YEL	120
4	CH-10Y	CMU-U	OLB-YEL	A125	8P-YEL	111

Do not provide the P20 terminal assembly (red monitor board) or red interface ribbon cable as specified in LA Specification No. 54-053-08.

Provide a P20 connector that mates with and is compatible with the red interface connector mounted on the front of the conflict monitor. Ensure that the P20 connector and the red interface

connector on the conflict monitor are center polarized to ensure proper connection. Ensure that removal of the P20 connector will cause the conflict monitor to recognize a latching fault condition and place the cabinet into flashing operation.

Wire the P20 connector to the output file and auxiliary output file using 22 AWG stranded wires. Ensure the length of these wires is a minimum of 42 inches in length. Provide a durable braided sleeve around the wires to organize and protect the wires.

Wire the P20 connector to the traffic signal red displays to provide inputs to the conflict monitor as shown below. Ensure the pedestrian Don't Walk circuits are wired to channels 13 through 16 of the P20 connector. When no auxiliary output file is installed in the cabinet, provide wires for channels 9 through 12 reds. Provide a wire for special function 1. Terminate the unused wires with ring type lugs, insulated, and bundled for optional use.

	P20 Connector				
PIN	**FUNCTION**	**CONN TO**	**PIN**	**FUNCTION**	**CONN TO**
1	Channel 15 Red	119	2	Channel 16 Red	110
3	Channel 14 Red	104	4	Chassis GND	01-9
5	Channel 13 Red	113	6	N/C	
7	Channel 12 Red	AUX 101	8	Spec Function 1	
9	Channel 10 Red	AUX 124	10	Channel 11 Red	AUX 114
11	Channel 9 Red	AUX 121	12	Channel 8 Red	107
13	Channel 7 Red	122	14	Channel 6 Red	134
15	Channel 5 Red	131	16	Channel 4 Red	101
17	Channel 3 Red	116	18	Channel 2 Red	128
19	Channel 1 Red	125	20	Red Enable	01-14

Ensure the controller unit outputs to the auxiliary output file are pre-wired to the C5 connector. When no auxiliary output file is installed in the cabinet, connect the C5 connector to a storage socket located on the Input Panel or on the rear of the PDA.

Do not wire pin 12 of the load switch sockets.

In addition to the requirements of LA Specification No. 54-053-08, ensure relay K1 on the Power Distribution Assembly (PDA) is a four pole relay and K2 on the PDA is a two pole relay.

Provide a two pole, ganged circuit breaker for the flash bus circuit. Ensure the flash bus circuit breaker is an inverse time circuit breaker rated for 10 amps at 120 VAC with a minimum of 10,000 RMS symmetrical amperes short circuit current rating. Do not provide the auxiliary switch feature on the flash bus circuit breaker. Ensure the ganged flash bus circuit breaker is certified by the circuit breaker manufacturer to provide gang tripping operation.

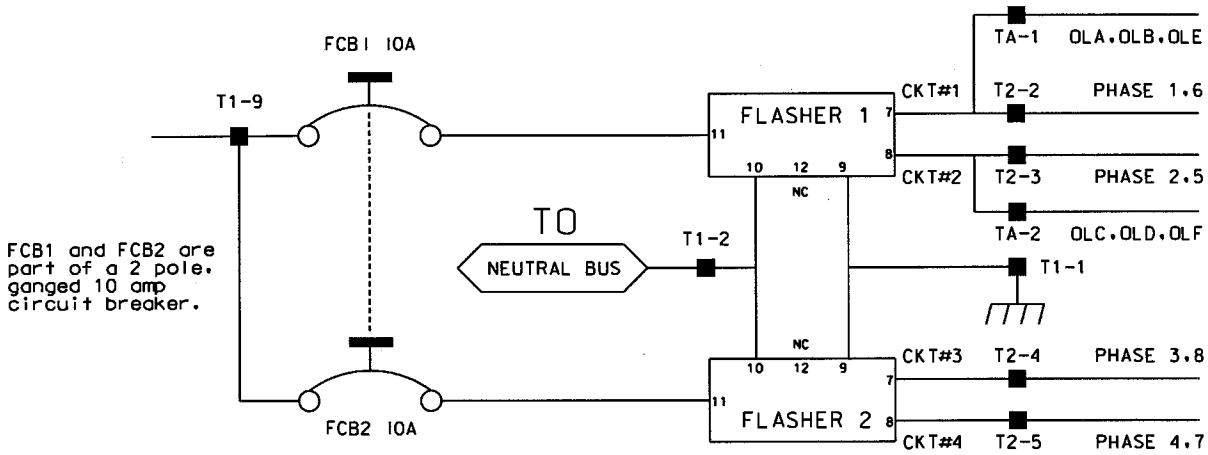

Ensure auxiliary output files are wired as follows:

AUXILIARY OUTPUT FILE TERMINAL BLOCK TA ASSIGNMENTS	
POSITION	**FUNCTION**
1	Flasher Unit #1, Circuit 1/FTR1 (OLA, OLB)/FTR3 (OLE)
2	Flasher Unit #1, Circuit 2/FTR2 (OLC, OLD)/FTR3 (OLF)
3	Flash Transfer Relay Coils
4	AC -
5	Power Circuit 5
6	Power Circuit 5
7	Equipment Ground Bus
8	NC

Provide four spare load resistors mounted in each cabinet. Ensure each load resistor is rated as shown in the table below. Wire one side of each load resistor to AC-. Connect the other side of each resistor to a separate terminal on a four (4) position terminal block. Mount the load resistors and terminal block either inside the back of Output File No. 1 or on the upper area of the Service Panel.

ACCEPTABLE LOAD RESISTOR VALUES	
VALUE (ohms)	WATTAGE
1.5K – 1.9 K	25W (min)
2.0K – 3.0K	10W (min)

Provide Model 200 load switches, Model 204 flashers, Model 242 DC isolators, Model 252 AC isolators, and Model 206L power supply units that conform to CALTRANS' "*Transportation Electrical Equipment Specifications*" dated March 12, 2009 with Erratum 1.

C. Type 170 E Cabinet Physical Requirements:

Do not mold, cast, or scribe the name "City of Los Angeles" on the outside of the cabinet door as specified in LA Specification No. 54-053-08. Do not provide a Communications Terminal Panel as specified in LA Specification No. 54-053-08. Do not provide terminal block TBB on the Service Panel. Do not provide Cabinet Verification Test Program software or associated test jigs as specified in LA Specification No. 54-053-08.

Furnish unpainted, natural, aluminum cabinet shells. Ensure that all non-aluminum hardware on the cabinet is stainless steel or a Department approved non-corrosive alternate.

Ensure the lifting eyes, gasket channels, police panel, and all supports welded to the enclosure and doors are fabricated from 0.125 inch minimum thickness aluminum sheet and meet the same standards as the cabinet and doors.

Provide front and rear doors with latching handles that allow padlocking in the closed position. Furnish 0.75 inch minimum diameter stainless steel handles with a minimum 0.5 inch shank. Place the padlocking attachment at 4.0 inches from the handle shank center to clear the lock and key. Provide an additional 4.0 inches minimum gripping length.

Provide Corbin #2 locks on the front and rear doors. Provide one (1) Corbin #2 and one (1) police master key with each cabinet. Ensure main door locks allow removal of keys in the locked position only.

Provide a surge protection panel with 16 loop surge protection devices and designed to allow sufficient free space for wire connection/disconnection and surge protection device replacement. For model 332 cabinets, provide an additional 20 loop surge protection devices. Provide an additional two AC+ interconnect surge devices to protect one slot and eight DC surge protection devices to protect four slots. Provide no protection devices on slot I14.

For base mounted cabinets, mount surge protection panels on the left side of the cabinet as viewed from the rear. Attach each panel to the cabinet rack assembly using bolts and make it easily removable. Mount the surge protection devices in vertical rows on each panel and connect the devices to one side of 12 position, double row terminal blocks with #8 screws. For each surge protection panel, terminate all grounds from the surge protection devices on a copper equipment ground bus attached to the surge protection panel. Wire the terminals to the rear of a standard input file using spade lugs for input file protection.

Provide permanent labels that indicate the slot and the pins connected to each terminal that may be viewed from the rear cabinet door. Label and orient terminals so that each pair of inputs is next to each other. Indicate on the labeling the input file (I or J), the slot number (1-14) and the terminal pins of the input slots (either D & E for upper or J & K for lower).

Provide a minimum 14 x 16 inch pull out, hinged top shelf located immediately below controller mounting section of the cabinet. Ensure the shelf is designed to fully expose the table surface outside the controller at a height approximately even with the bottom of the controller. Ensure the shelf has a storage bin interior which is a minimum of 1 inch deep and approximately the same dimensions as the shelf. Provide an access to the storage area by lifting the hinged top of the shelf. Fabricate the shelf and slide from aluminum or stainless steel and ensure the assembly can support the 2070L controller plus 15 pounds of additional weight. Ensure shelf has a locking mechanism to secure it in the fully extended position and does not inhibit the removal of the 2070L controller or removal of cards inside the controller when fully extended. Provide a locking mechanism that is easily released when the shelf is to be returned to its non-use position directly under the controller.

D. Model 2018 Enhanced Conflict Monitor:

Furnish Model 2018 Enhanced Conflict Monitors that provide monitoring of 18 channels. Ensure each channel consists of a green, yellow, and red field signal input. Ensure that the conflict monitor meets or exceeds CALTRANS' Transportation Electrical Equipment Specifications dated March 12, 2009 with Erratum 1 (hereafter referred to as CALTRANS' 2009 TEES) for a model 210 monitor unit and other requirements stated in this specification.

Ensure the conflict monitor is provided with an 18 channel conflict programming card. Pin EE and Pin T of the conflict programming card shall be connected together. Pin 16 of the conflict programming card shall be floating. Ensure that the absence of the conflict programming card will cause the conflict monitor to trigger (enter into fault mode), and remain in the triggered state until the programming card is properly inserted and the conflict monitor is reset.

Provide a conflict monitor that incorporates LED indicators into the front panel to dynamically display the status of the monitor under normal conditions and to provide a comprehensive review of field inputs with monitor status under fault conditions. Ensure that the monitor indicates the channels that were active during a conflict condition and the channels that experienced a failure for all other per channel fault conditions detected. Ensure that these indications and the status of each channel are retained until the Conflict Monitor is reset. Furnish LED indicators for the following:

- AC Power (Green LED indicator)
- VDC Failed (Red LED indicator)
- WDT Error (Red LED indicator)
- Conflict (Red LED indicator)
- Red Fail (Red LED indicator)
- Dual Indication (Red LED indicator)
- Yellow/Clearance Failure (Red LED indicator)
- PCA/PC Ajar (Red LED indicator)
- Monitor Fail/Diagnostic Failure (Red LED indicator)

- 54 Channel Status Indicators (1 Red, 1 Yellow, and 1 Green LED indicator for each of the 18 channels)

Provide a switch to set the Red Fail fault timing. Ensure that when the switch is in the ON position the Red Fail fault timing value is set to 1350 +/- 150ms (2018 mode). Ensure that when the switch is in the OFF position the Red Fail fault timing value is set to 850 +/- 150ms (210 mode).

Provide a switch to set the Watchdog fault timing. Ensure that when the switch is in the ON position the Watchdog fault timing value is set to 1.0 +/- 0.1s (2018 mode). Ensure that when the switch is in the OFF position the Watchdog fault timing value is set to 1.5 +/- 0.1s (210 mode).

Provide a jumper or switch to set the AC line brown-out levels. Ensure that when the jumper is present or the switch is in the ON position the AC line dropout voltage threshold is 98 +/- 2 Vrms, the AC line restore voltage threshold is 103 +/- 2 Vrms, and the AC line brown-out timing value is set to 400 +/- 50ms (2018 mode). Ensure that when the jumper is not present or the switch is in the OFF position the AC line dropout voltage threshold is 92 +/- 2 Vrms, the AC line restore voltage threshold is 98 +/- 2 Vrms, and the AC line brown-out timing value is set to 80 +/- 17ms (210 mode).

Provide a jumper or switch that will enable and disable the Watchdog Latch function. Ensure that when the jumper is not present or the switch is in the OFF position the Watchdog Latch function is disabled. In this mode of operation, a Watchdog fault will be reset following a power loss, brownout, or power interruption. Ensure that when the jumper is present or the switch is in the ON position the Watchdog Latch function is enabled. In this mode of operation, a Watchdog fault will be retained until a Reset command is issued.

Provide a jumper that will reverse the active polarity for pin #EE (output relay common). Ensure that when the jumper is not present pin #EE (output relay common) will be considered 'Active' at a voltage greater than 70 Vrms and 'Not Active' at a voltage less than 50 Vrms (Caltrans mode). Ensure that when the jumper is present pin #EE (output relay common) will be considered 'Active' at a voltage less than 50 Vrms and 'Not Active' at a voltage greater than 70 Vrms (Failsafe mode).

In addition to the connectors required by CALTRANS' 2009 TEES, provide the conflict monitor with a red interface connector mounted on the front of the monitor. Ensure the connector is a 20 pin, right angle, center polarized, male connector with latching clip locks and polarizing keys. Ensure the right angle solder tails are designed for a 0.062" thick printed circuit board. Keying of the connector shall be between pins 3 and 5, and between 17 and 19. Ensure the connector has two rows of pins with the odd numbered pins on one row and the even pins on the other row. Ensure the connector pin row spacing is 0.10" and pitch is 0.10". Ensure the mating length of the connector pins is 0.24". Ensure the pins are finished with gold plating 30μ" thick.

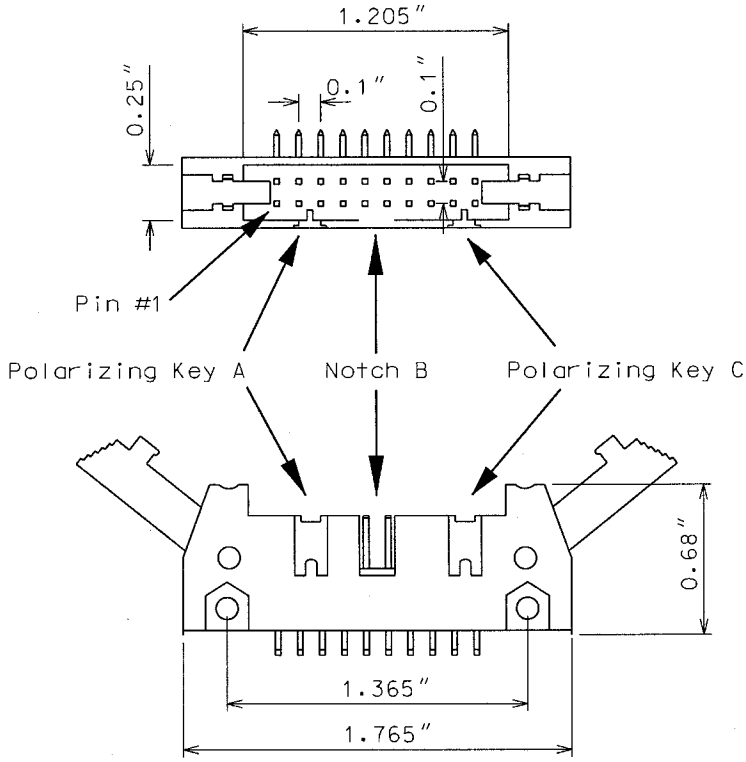

Ensure the red interface connector pins on the monitor have the following functions:

Pin #	Function	Pin #	Function
1	Channel 15 Red	2	Channel 16 Red
3	Channel 14 Red	4	Chassis Ground
5	Channel 13 Red	6	Special Function 2
7	Channel 12 Red	8	Special Function 1
9	Channel 10 Red	10	Channel 11 Red
11	Channel 9 Red	12	Channel 8 Red
13	Channel 7 Red	14	Channel 6 Red
15	Channel 5 Red	16	Channel 4 Red
17	Channel 3 Red	18	Channel 2 Red
19	Channel 1 Red	20	Red Enable

Ensure that removal of the P20 cable connector will cause the conflict monitor to recognize a latching fault condition and place the cabinet into flashing operation.

Provide Special Function 1 and Special Function 2 inputs to the unit which shall disable only Red Fail Monitoring when either input is sensed active. A Special Function input shall be sensed active when the input voltage exceeds 70 Vrms with a minimum duration of 550 ms. A Special Function

input shall be sensed not active when the input voltage is less than 50 Vrms or the duration is less than 250 ms. A Special Function input is undefined by these specifications and may or may not be sensed active when the input voltage is between 50 Vrms and 70 Vrms or the duration is between 250 ms and 550 ms.

Ensure the conflict monitor recognizes field signal inputs for each channel that meet the following requirements:

- consider a Red input greater than 70 Vrms and with a duration of at least 500 ms as an "on" condition;
- consider a Red input less than 50 Vrms or with a duration of less than 200 ms as an "off" condition (no valid signal);
- consider a Red input between 50 Vrms and 70 Vrms or with a duration between 200 ms and 500 ms to be undefined by these specifications;
- consider a Green or Yellow input greater than 25 Vrms and with a duration of at least 500 ms as an "on" condition;
- consider a Green or Yellow input less than 15 Vrms or with a duration of less than 200 ms as an "off" condition; and
- consider a Green or Yellow input between 15 Vrms and 25 Vrms or with a duration between 200 ms and 500 ms to be undefined by these specifications.

Provide a conflict monitor that recognizes the faults specified by CALTRANS' 2009 TEES and the following additional faults. Ensure the conflict monitor will trigger upon detection of a fault and will remain in the triggered (in fault mode) state until the unit is reset at the front panel or through the external remote reset input for the following failures:

1. **Red Monitoring or Absence of Any Indication (Red Failure):** A condition in which no "on" voltage signal is detected on any of the green, yellow, or red inputs to a given monitor channel. If a signal is not detected on at least one input (R, Y, or G) of a conflict monitor channel for a period greater than 1000 ms when used with a 170 controller and 1500 ms when used with a 2070L controller, ensure monitor will trigger and put the intersection into flash. If the absence of any indication condition lasts less that 750 ms when used with a 170 controller and 1200 ms when used with a 2070L controller, ensure conflict monitor will not trigger. Red fail monitoring shall be enabled on a per channel basis by the use of switches located on the conflict monitor. Have red monitoring occur when all of the following input conditions are in effect:

   a) Red Enable input to monitor is active (Red Enable voltages are "on" at greater than 70 Vrms, off at less than 50 Vrms, undefined between 50 and 70 Vrms), and

   b) Neither Special Function 1 nor Special Function 2 inputs are active.

   c) Pin #EE (output relay common) is not active

2. **Short/Missing Yellow Indication Fault (Clearance Error):** Yellow indication following a green is missing or shorter than 2.7 seconds (with ± 0.1-second accuracy). If a channel fails to detect an "on" signal at the Yellow input for a minimum of 2.7 seconds (± 0.1 second) following the detection of an "on" signal at a Green input for that channel, ensure that the monitor triggers and generates a clearance/short yellow error fault indication. Short/missing

yellow (clearance) monitoring shall be enabled on a per channel basis by the use of switches located on the conflict monitor. This fault shall not occur when the channel is programmed for Yellow Inhibit, when the Red Enable signal is inactive or pin #EE (output relay common) is active.

3. **Dual Indications on the Same Channel:** In this condition, more than one indication (R,Y,G) is detected as "on" at the same time on the same channel. If dual indications are detected for a period greater than 500 ms, ensure that the conflict monitor triggers and displays the proper failure indication (Dual Ind fault). If this condition is detected for less than 200 ms, ensure that the monitor does not trigger. G-Y-R dual indication monitoring shall be enabled on a per channel basis by the use of switches located on the conflict monitor. G-Y dual indication monitoring shall be enabled for all channels by use of a switch located on the conflict monitor. This fault shall not occur when the Red Enable signal is inactive or pin #EE (output relay common) is active.
4. **Configuration Settings Change:** The configuration settings are comprised of (as a minimum) the permissive diode matrix, dual indication switches, yellow disable jumpers, any option switches, any option jumpers, and the Watchdog Enable switch. Ensure the conflict monitor compares the current configuration settings with the previous stored configuration settings on power-up, on reset, and periodically during operation. If any of the configuration settings are changed, ensure that the conflict monitor triggers and causes the program card indicator to flash. Ensure that configuration change faults are only reset by depressing and holding the front panel reset button for a minimum of three seconds. Ensure the external remote reset input does not reset configuration change faults.

Ensure the conflict monitor will trigger and the AC Power indicator will flash at a rate of 2 Hz ± 20% with a 50% duty cycle when the AC Line voltage falls below the "drop-out" level. Ensure the conflict monitor will resume normal operation when the AC Line voltage returns above the "restore" level. Ensure the AC Power indicator will remain illuminated when the AC voltage returns above the "restore" level. Should an AC Line power interruption occur while the monitor is in the fault mode, then upon restoration of AC Line power, the monitor will remain in the fault mode and the correct fault and channel indicators will be displayed.

Provide a flash interval of at least 6 seconds and at most 10 seconds in duration following a power-up, an AC Line interruption, or a brownout restore. Ensure the conflict monitor will suspend all fault monitoring functions, close the Output relay contacts, and flash the AC indicator at a rate of 4 Hz ± 20% with a 50% duty cycle during this interval. Ensure the termination of the flash interval after at least 6 seconds if the Watchdog input has made 5 transitions between the True and False state and the AC Line voltage is greater than the "restore" level. If the watchdog input has not made 5 transitions between the True and False state within 10 ± 0.5 seconds, the monitor shall enter a WDT error fault condition.

Ensure the conflict monitor will monitor an intersection with a minimum of four approaches using the four-section Flashing Yellow Arrow (FYA) vehicle traffic signal as outlined by the NCHRP 3-54 research project for protected-permissive left turn signal displays. Ensure the conflict monitor will operate in the FYA mode and FYAc (Compact) mode as specified below to monitor each channel for the following fault conditions: Conflict, Red Fail, Dual Indication, and Clearance. Provide a switch to select between the FYA mode and FYAc mode. Provide a switch to select each FYA phase movement for monitoring.

FYA mode

FYA Signal Head	Phase 1	Phase 3	Phase 5	Phase 7
Red Arrow	Channel 9 Red	Channel 10 Red	Channel 11 Red	Channel 12 Red
Yellow Arrow	Channel 9 Yellow	Channel 10 Yellow	Channel 11 Yellow	Channel 12 Yellow
Flashing Yellow Arrow	Channel 9 Green	Channel 10 Green	Channel 11 Green	Channel 12 Green
Green Arrow	Channel 1 Green	Channel 3 Green	Channel 5 Green	Channel 7 Green

FYAc mode

FYA Signal Head	Phase 1	Phase 3	Phase 5	Phase 7
Red Arrow	Channel 1 Red	Channel 3 Red	Channel 5 Red	Channel 7 Red
Yellow Arrow	Channel 1 Yellow	Channel 3 Yellow	Channel 5 Yellow	Channel 7 Yellow
Flashing Yellow Arrow	Channel 1 Green	Channel 3 Green	Channel 5 Green	Channel 7 Green
Green Arrow	Channel 9 Green	Channel 9 Yellow	Channel 10 Green	Channel 10 Yellow

Ensure that the conflict monitor will log at least nine of the most recent events detected by the monitor in non-volatile EEPROM memory (or equivalent). For each event, record at a minimum the time, date, type of event, status of each field signal indication with RMS voltage, and specific channels involved with the event. Ensure the conflict monitor will log the following events: monitor reset, configuration, previous fault, and AC line. Furnish the signal sequence log that shows all channel states (Greens, Yellows, and Reds) and the Red Enable State for a minimum of 2 seconds prior to the current fault trigger point. Ensure the display resolution of the inputs for the signal sequence log is not greater than 50 ms.

Provide a RS-232C/D compliant port (DB-9 female connector) on the front panel of the conflict monitor in order to provide communications from the conflict monitor to the 170/2070L controller or to a Department-furnished laptop computer. Electrically isolate the port interface electronics from all monitor electronics, excluding Chassis Ground. Ensure that the controller can receive all event log information through a controller Asynchronous Communications Interface Adapter (Type 170E) or Async Serial Comm Module (2070L). Provide a Windows based graphic user interface software

to communicate directly through the same monitor RS-232C/D compliant port to retrieve and view all event log information to a Department-furnished laptop computer. The RS-232C/D compliant port on the monitor shall allow the monitor to function as a DCE device with pin connections as follows:

Conflict Monitor RS-232C/D (DB-9 Female) Pinout		
Pin Number	**Function**	**I/O**
1	DCD	O
2	TX Data	O
3	RX Data	I
4	DTR	I
5	Ground	-
6	DSR	O
7	CTS	I
8	RTS	O
9	NC	-

MONITOR BOARD EDGE CONNECTOR

Pin #	Function (Back Side)	Pin #	Function (Component Side)
1	Channel 2 Green	A	Channel 2 Yellow
2	Channel 13 Green	B	Channel 6 Green
3	Channel 6 Yellow	C	Channel 15 Green
4	Channel 4 Green	D	Channel 4 Yellow
5	Channel 14 Green	E	Channel 8 Green
6	Channel 8 Yellow	F	Channel 16 Green
7	Channel 5 Green	H	Channel 5 Yellow
8	Channel 13 Yellow	J	Channel 1 Green
9	Channel 1 Yellow	K	Channel 15 Yellow
10	Channel 7 Green	L	Channel 7 Yellow
11	Channel 14 Yellow	M	Channel 3 Green
12	Channel 3 Yellow	N	Channel 16 Yellow
13	Channel 9 Green	P	Channel 17 Yellow
14	Channel 17 Green	R	Channel 10 Green
15	Channel 11 Yellow	S	Channel 11 Green
16	Channel 9 Yellow	T	Channel 18 Yellow
17	Channel 18 Green	U	Channel 10 Yellow
--		--	
18	Channel 12 Yellow	V	Channel 12 Green
19	Channel 17 Red	W	Channel 18 Red
20	Chassis Ground	X	Not Assigned
21	AC-	Y	DC Common
22	Watchdog Timer	Z	External Test Reset
23	+24VDC	AA	+24VDC
24	Tied to Pin 25	BB	Stop Time (Output)
25	Tied to Pin 24	CC	Not Assigned
26	Not Assigned	DD	Not Assigned
27	Relay Output, Side #3, N.O.	EE	Relay Output,Side #2,Common
28	Relay Output, Side #1, N.C.	FF	AC+

-- Slotted for keying between Pins 17/U and 18/V

CONFLICT PROGRAM CARD PIN ASSIGNMENTS

Pin #	Function (Back Side)	Pin #	Function (Component Side)
1	Channel 2 Green	A	Channel 1 Green
2	Channel 3 Green	B	Channel 2 Green
3	Channel 4 Green	C	Channel 3 Green
4	Channel 5 Green	D	Channel 4 Green
5	Channel 6 Green	E	Channel 5 Green
6	Channel 7 Green	F	Channel 6 Green
7	Channel 8 Green	H	Channel 7 Green
8	Channel 9 Green	J	Channel 8 Green
9	Channel 10 Green	K	Channel 9 Green
10	Channel 11 Green	L	Channel 10 Green
11	Channel 12 Green	M	Channel 11 Green
12	Channel 13 Green	N	Channel 12 Green
13	Channel 14 Green	P	Channel 13 Green
14	Channel 15 Green	R	Channel 14 Green
15	Channel 16 Green	S	Channel 15 Green
16	N/C	T	PC AJAR
17	Channel 1 Yellow	U	Channel 9 Yellow
18	Channel 2 Yellow	V	Channel 10 Yellow
19	Channel 3 Yellow	W	Channel 11 Yellow
20	Channel 4 Yellow	X	Channel 12 Yellow
21	Channel 5 Yellow	Y	Channel 13 Yellow
22	Channel 6 Yellow	Z	Channel 14 Yellow
23	Channel 7 Yellow	AA	Channel 15 Yellow
24	Channel 8 Yellow	BB	Channel 16 Yellow
--		--	
25	Channel 17 Green	CC	Channel 17 Yellow
26	Channel 18 Green	DD	Channel 18 Yellow
27	Channel 16 Green	EE	PC AJAR (Program Card)
28	Yellow Inhibit Common	FF	Channel 17 Green

-- Slotted for keying between Pins 24/BB and 25/CC

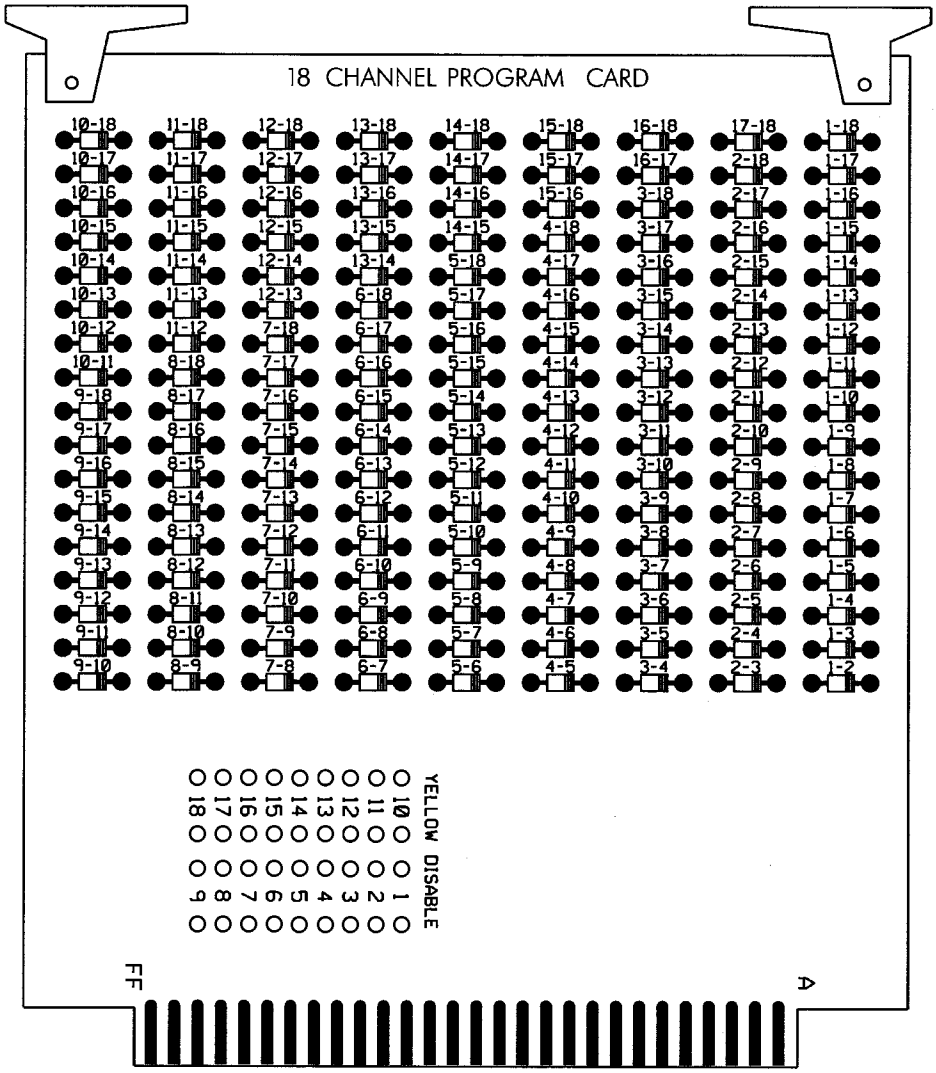

E. Preemption and Sign Control Box

Provide preemption and sign control box to operate in a Model 332 and Model 336S cabinet. Provide hardware to mount the box to the cage of the cabinet to ensure the front side is facing the opposite side of the cabinet. Furnish the material of the box from a durable finished metallic or thermoplastic case. Ensure the size of the box is not greater than 7(l) x 5(w) x 5(d) inches. Ensure that no modification is necessary to mount the box on the cabinet cage.

Provide the following components in the preemption and sign control box: relays, fuses, terminal blocks, MOVs, resistor, RC network, lamp, and push button switch.

Provide UL Listed or Recognized relay K1 as a DPDT enclosed relay (120 VAC, 60 Hz coil) with an 8-pin octal-style plug and associated octal base. Provide contact material made of AgCdO with a 10 amp, 240 VAC rating. Ensure the relay has a specified pickup voltage of 102 VAC.

Provide relay SSR1 as a Triac SPST normally open solid state relay that is rated for 120 VAC input and zero-crossing (resistive load) 25 amp @ 120 VAC output. Ensure the relay turns on at 90 Vrms within 10 ms and turns off at 10 Vrms within 40 ms. Ensure the relay has physical

characteristics as shown in the wiring detail in Figure 1. Provide 4 terminal screws with saddle clamps.

Provide fuses F1 and F2 as a UL Listed ¼" x 1-1/4" glass tube rated at 250 volts with a 10kA interrupting rating. Ensure F1 non-delay (fast-acting) and F2 slow-blow (time-delay) fuses have a maximum opening times of 60 minutes and 120 seconds for currents of 135 and 200 percent of the ampere rating, respectively. Ensure F2 slow-blow (time-delay) fuses have a minimum opening times of 12 seconds at 200 percent of the ampere rating. Provide fuse holders that are UL Recognized panel-mounted holders rated 250V, 15 ampere minimum with bayonet-type knobs which accept ¼" x 1-1/4" glass tube fuses.

Provide terminal blocks that are rated for 300V and are made of electrical grade thermoplastic or thermosetting plastic. Ensure each terminal block is of closed back design and has recessed-screw terminals with molded barriers between terminals. Ensure each terminal block is labeled with a block designation. Ensure each terminal is labeled with the function and a number.

Provide 3/4-inch diameter radial lead UL-recognized metal oxide varistors (MOVs) that have electrical performance as outlined below.

PROPERTIES OF MOV SURGE PROTECTOR	
Maximum Continuous Applied Voltage at 185° F	150 VAC (RMS) 200 VDC
Maximum Peak 8x20μs Current at 185° F	6500 A
Maximum Energy Rating at 185° F	80 J
Voltage Range 1 mA DC Test at 77° F	212-268 V
Max. Clamping Voltage 8x20μs, 100A at 77° F	395 V
Typical Capacitance (1 MHz) at 77° F	1600 pF

Provide resistor R1 as a 2K ohm, 12 watt, wirewound resistor with tinned terminals and attaching leads. Ensure the resistor is spaced apart from surrounding wires.

Provide a LED or incandescent lamp that has a voltage rating of 120 VAC with a minimum life rating at 50,000 hours.

Wire the preemption and sign control box as shown in Figure 1.

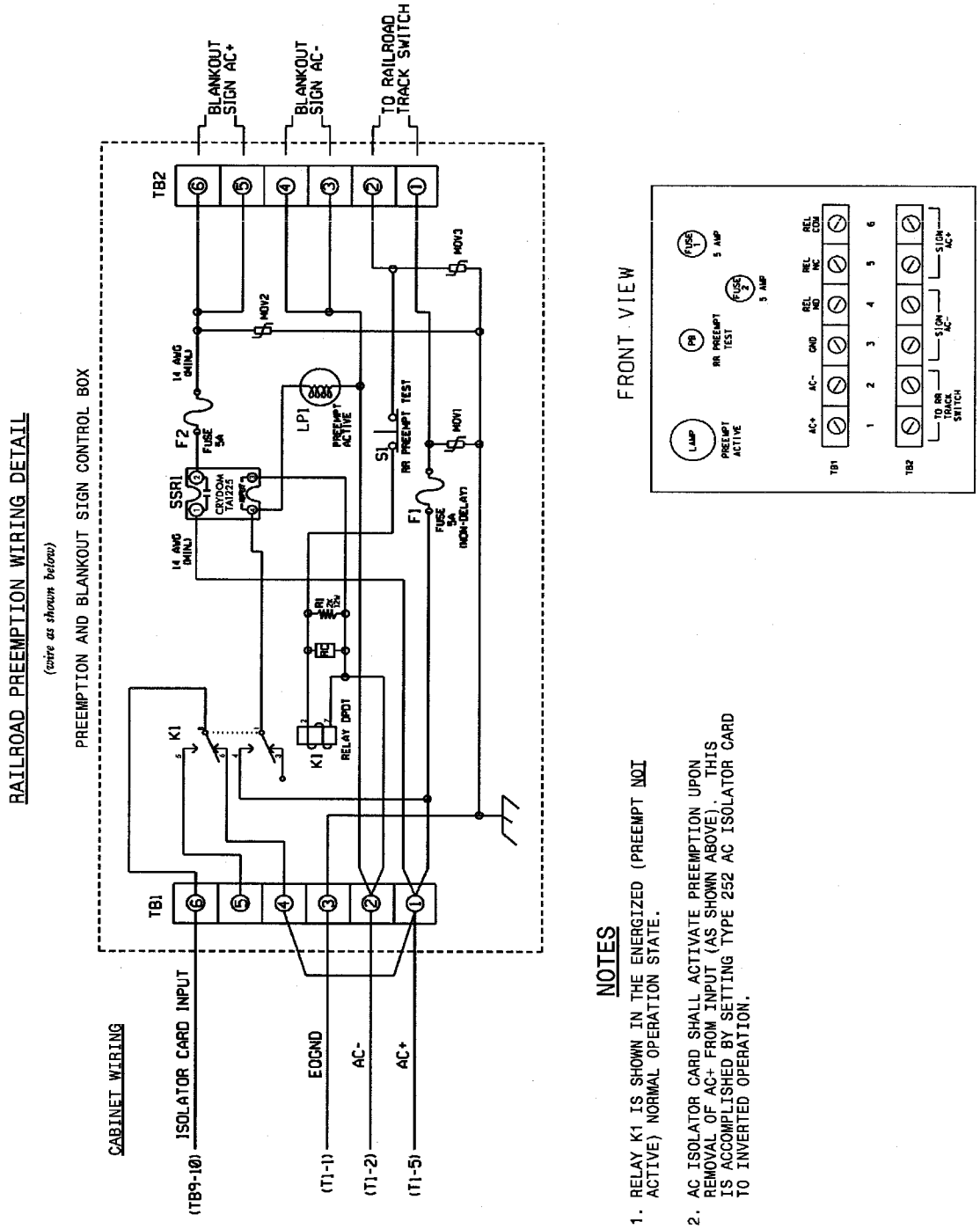
RAILROAD PREEMPTION WIRING DETAIL
(wire as shown below)
PREEMPTION AND BLANKOUT SIGN CONTROL BOX
CABINET WIRING
ISOLATOR CARD INPUT
(TB9-10)
EDGND
AC-
AC+
(T1-1)
(T1-2)
(T1-5)
TB1
TB2
K1
RELAY DPDT
SSR1
CRYDOM TA1225
F2
FUSE 5A
14 AWG (MIN)
LP1
PREEMPT ACTIVE
S1
RR PREEMPT TEST
F1
FUSE 5A (NON-DELAY)
MOV1
MOV2
MOV3
BLANKOUT SIGN AC+
BLANKOUT SIGN AC-
TO RAILROAD TRACK SWITCH
FRONT VIEW
LAMP
PREEMPT ACTIVE
PB
RR PREEMPT TEST
FUSE 1
5 AMP
FUSE 2
5 AMP
AC+
AC-
GND
REL NO
REL NC
REL COM
TO RR TRACK SWITCH
SIGN AC-
SIGN AC+
NOTES
1. RELAY K1 IS SHOWN IN THE ENERGIZED (PREEMPT NOT ACTIVE) NORMAL OPERATION STATE.
2. AC ISOLATOR CARD SHALL ACTIVATE PREEMPTION UPON REMOVAL OF AC+ FROM INPUT (AS SHOWN ABOVE). THIS IS ACCOMPLISHED BY SETTING TYPE 252 AC ISOLATOR CARD TO INVERTED OPERATION.

Figure 1

4.4. MATERIALS – TYPE 170 DETECTOR SENSOR UNITS

Furnish detector sensor units that comply with Chapter 5 Section 1, "General Requirements," and Chapter 5 Section 2, "Model 222 & 224 Loop Detector Sensor Unit Requirements," of the CALTRANS "Transportation Electrical Equipment Specifications" dated March 12, 2009 with Erratum 1.

4.5. MATERIALS – TYPE 2070E CONTROLLERS

Conform to CALTRANS *Transportation Electrical Equipment Specifications* (TEES) (dated March 12, 2009, plus Errata 1 dated January 21, 2010) except as required herein.

Furnish Model 2070E controllers. Ensure that removal of the CPU module from the controller will place the intersection into flash.

The Department will provide software at the beginning of the burning-in period. Contractor shall give 5 working days notice before needing software. Program software provided by the Department.

Provide Model 2070E controllers with the latest version of OS9 operating software and device drivers, composed of the unit chassis and at a minimum the following modules and assemblies:

- MODEL 2070-1E, CPU Module, Single Board, with 8Mb Datakey (blue in color)
- MODEL 2070-2A or approved MODEL 2070-2E, Field I/O Module (FI/O)
  - Note: Configure the Field I/O Module to disable both the External WDT Shunt/Toggle Switch and SP3 (SP3 active indicator is "off")
- MODEL 2070-3B, Front Panel Module (FP), Display B (8x40)
- MODEL 2070-4, Power Supply Module, 10 AMP
- MODEL 2070-7A, Async Serial Com Module (9-pin RS-232)

Furnish one additional MODEL 2070-7A, Async Serial Com Module (9-pin RS-232) for all master controller locations.

For each master location and central control center, furnish a U.S. Robotics V.92 or approved equivalent auto-dial/auto-answer external modem to accomplish the interface to the Department-furnished microcomputers. Include all necessary hardware to ensure telecommunications.

5. RIGID METALLIC CONDUIT

5.1. DESCRIPTION

Install rigid metallic conduit for all underground runs under the railroad track as shown on the traffic signal plans.

5.2. MATERIALS

Refer to Section 1715-2 of the *NCDOT Standard Specifications for Roads and Structures*.

Furnish material, equipment, and hardware under this section that is pre-approved on the ITS and Signals QPL.

5.3. CONSTRUCTION METHODS

Refer to Section 1715-3 of the *NCDOT Standard Specifications for Roads and Structures*. Install the number of 2-inch rigid metallic conduits shown on the traffic signal plans for each location.

The contractor may use any of the methods listed to install the rigid metallic conduit in accordance with regulations and requirements of the railroad.

5.4. MEASUREMENT AND PAYMENT

2-Inch rigid metallic conduit will be measured in horizontal linear feet of rigid metallic conduit installation furnished, installed, and accepted. Measurement will be made along the approximate centerline of the conduit system. Payment will be in linear feet.

Payment will be made under:

2-Inch Rigid Metallic Conduit ..... Linear Feet

242

RAILROAD SPECIAL PROVISONS FOR ROADBED

TABLE OF CONTENTS

RAILROAD ROADBED

Contents

RAILROAD ROADBED	1
CLEARING AND GRUBBING - METHOD III	1
OWNERSHIP OF MATERIALS	1
WELDED STEEL PIPE	1
WELDED STEEL PIPE OPEN CUT	3
BITUMINOUS COATED CORRUGATED METAL PIPE (BCCMP)	4
ENDWALLS	6
REMOVE EXISTING HEADWALLS	7
RAILROAD TRACK TO BE REMOVED	7
EMBANKMENT	9
SUB-BALLAST	10
MAINTENANCE OF TRACK ROADBED	11
RIGHT OF WAY GATE	11
EXCAVATION	12
SUBSURFACE DRAIN	14
TEMPORARY WOVEN WIRE FENCE	16

NORTH CAROLINA PROFESSIONAL SEAL 35013 ENGINEER DONALD H. ARANT 8-30-13 P-5206B (PART I) Rail Design Engineer	NORTH CAROLINA PROFESSIONAL SEAL 35013 ENGINEER JIMMY J. TERRY JR. 9/6/13 P-5206C (PART II) Rail Design Engineer	NORTH CAROLINA PROFESSIONAL SEAL 14160 ENGINEER 8-30-13 P-5206D (PART III) Rail Design Engineer

RAILROAD ROADBED

The Standard Specifications for Roads and Structures, January 2012 of the North Carolina Department of Transportation, hereinafter referred to as the Standard Specifications, shall apply to the articles of the Project Special Provisions.

CLEARING AND GRUBBING - METHOD III

Perform clearing on this project to the limits established by Method "III" shown on Standard Drawing No. 200.03 of the *2012 Roadway Standard Drawings*.

The work shall be performed in accordance with Section 200, "Clearing and Grubbing", of the Standard Specifications, except that grubbing will be performed on all cleared excavation and embankment areas and will include all stumps, roots and other embedded debris.

OWNERSHIP OF MATERIALS

All salvaged material originally furnished by the Department's Contractor shall remain the property of the Contractor, and he shall give consideration to this when making his bid. All salvaged track materials owned by the Department's Contractor shall be disposed of by the Contractor, and the construction area shall be left in a neat and orderly condition.

All salvaged track material either existing or furnished by NSR is and shall remain the property of the NSR except as noted in the track to be removed section of the special provisions.

WELDED STEEL PIPE

Description

This work shall consist of furnishing and installing welded steel pipe by trenchless methods as shown in the contract, plans and as directed.

Materials

Refer to Division 10.

Item	Section
Welded Steel Pipe	1032-5

Use suppliers of metal pipe culverts, fittings and all other accessories covered by this section that meet the Department's Brand Certification program requirements for metal pipe culverts and are listed on the Materials and Tests Unit's pre-approved list for suppliers of metal pipe culvert. The pre-approved list is available on the Department's website

Pipe Installation

Replace section 330-3 of the 2012 Standard Specifications with the following:

The pipe shall be installed by dry boring and jacking under the tracks as shown in the plans. The pipe shall be carefully dry bored true to the line and grade given. The bore shall be held to a minimum to insure that there will be no settlement. All voids around the outside of the pipe shall be completely filled to the satisfaction of the Engineer.

The Contractor shall submit to the Railroad Engineer and the NCDOT Engineer a complete plan and schedule for pipe installation 2 weeks prior to the expected commencement of work. The submission shall include complete details of the sheeting, shoring and bracing for the protection of Railroad roadbed, materials and equipment pertinent to the operation. The Contractor shall not proceed with the pipe installation until he has received acceptance of the plan and schedule from the Railroad Engineer and the NCDOT Engineer.

Conduct a pre-construction meeting in the presence of the Railroad Engineer and the Engineer at least 48 hours before the beginning of the pipe installation to discuss the method of installation to assure the pipe is installed true to line and grade. The methods that will be used to insure there is no settlement of the pipe or the railroad roadbed section above the pipe.

All work shall be done with a RWIC/flagman on site and the work shall be performed during allowable work periods. Work shall stop when a train is passing. The Contractor shall have no claim against the Railroad or the Department for any delays caused by NSR's train operations.

The boring operation shall be progressed without stoppage (except for adding lengths of pipe) during daylight hours until the leading edge of the pipe has reached the receiving pit. The contractor shall plan his work to complete the boring between the influence lines of the track structure without stoppage. For the purpose of this provision, the influence line shall be defined as a 1:1 slope extending away from the track, from the bottom edge of tie. The contractor shall shore the leading end of the pipe when stopping work and shall continue the boring operation the morning of the next day. The installation shall be carried on without interruption, insofar as practicable, to prevent the pipe from becoming firmly set in the embankment.

The front of the pipe shall be provided with mechanical arrangements or devices that will positively prevent the auger from leading the pipe so that no unsupported excavation is ahead of the pipe.

The auger and cutting head arrangement shall be removable from within the pipe in the event an obstruction is encountered. If the obstruction cannot be removed without excavation in advance of the pipe, the pipe shall be abandoned in place and immediately filled with grout. A new installation procedure and revised plans must be submitted to, and approved by, the Engineering Representative before work can resume.

The over-cut by the cutting head shall not exceed the outside diameter of the pipe by more than 1/2 inch. If voids should develop or if the bored hole diameter is greater than the outside diameter of the pipe by more than 1 inch, the voids shall be pressure grouted.

When boring and jacking pipe 36 inches and larger in diameter and the boring is halted within a distance less than 20 feet to the centerline of track, the heading shall be shored and braced if the track is active.

Any pipe damaged during the operation shall be removed and replaced by the Contractor at his expense.

The pits or trenches excavated to facilitate the pipe installation shall be backfilled immediately after the installation has been completed.

Measurement and Payment

__" *Welded Steel Pipe,* __" *Thick, Grade B in Soil* will be measured and paid as the actual number of linear feet of pipe measured along the flow line to the nearest foot, which has been installed in soil.

__" *Welded Steel Pipe,* __" *Thick, Grade B Not in Soil* will be measured and paid as the actual number of linear feet of pipe measured along the flow line to the nearest foot which has been installed in non-soil, as observed and confirmed by the Engineer. Non-soil is defined as all material other than soil. The Contractor shall request and obtain the Engineer's observation and confirmation of the limits of the installation not in soil before and during the installation of the pipe or portion of the pipe not in soil.

Failure of the Contractor to request and obtain the Engineer's observation and confirmation of the limits of the pipe not in soil before and during the installation will result in the payment at the unit price for __" *Welded Steel Pipe,* __" *Thick, Grade B in Soil.*
Such payment will include, but is not limited to, furnishing all labor, tools, equipment, materials and incidentals, miscellaneous grading or excavation necessary to complete the work. Installations that become damaged or are abandoned will be replaced at no cost to the Department.

Payment will be made under:

Pay Item	**Pay Unit**
__" Welded Steel Pipe, __" Thick, Grade B in Soil	Linear Foot
__" Welded Steel Pipe, __" Thick, Grade B Not in Soil	Linear Foot

WELDED STEEL PIPE OPEN CUT

Description

This work shall consist of furnishing and installing welded steel pipe in accordance with Section 300 of the NCDOT 2012 *Standard Specifications* as shown in the contract, plans and as directed.

Materials

Refer to Division 10.

Item	Section
Welded Steel Pipe	1032-5

Use suppliers of metal pipe culverts, fittings and all other accessories covered by this section that meet the Department's Brand Certification program requirements for metal pipe culverts and are listed on the Materials and Tests Unit's pre-approved list for suppliers of metal pipe culvert. The pre-approved list is available on the Department's website

Installation

Replace section 330-3 of the 2012 Standard Specifications with the following:

The pipe shall be installed in accordance with Section 300 of the NCDOT 2012 *Standard Specifications*.

Measurement and Payment

__" *Welded Steel Pipe,* __" *Thick, Grade B (Open Cut)* will be measured and paid as the actual number of linear feet of pipe measured along the flow line to the nearest foot.

Such payment will include, but is not limited to, furnishing all labor, tools, equipment, materials and incidentals, miscellaneous grading or excavation necessary to complete the work. Installations that become damaged or are abandoned will be replaced at no cost to the Department.

Payment will be made under:

Pay Item	Pay Unit
__" Welded Steel Pipe, __" Thick, Grade B (Open Cut)	Linear Foot

BITUMINOUS COATED CORRUGATED METAL PIPE (BCCMP)

Description

Furnish and install drainage pipe at locations and size called for in the contract documents. The work includes construction of joints and connections to other pipes, endwalls and drainage structures.

Materials

Corrugated Steel Pipe

Corrugated steel culvert pipe and pipe arch shall meet ASTM A760, Type 1 pipe.

Corrugations shall be annular riveted with a profile of 2-2/3 inches x ½ inch unless otherwise specified.

Bituminous coating shall be applied to the inner and outer surfaces of the pipe and conform to the requirements of AASHTO M 190, Type A.

Coupling bands shall be one or two piece annular corrugated, made from galvanized steel and fully bituminous coated, with a minimum width of 24 inches. Bands may be one gage lighter that the pipe gage. Bands shall be made of steel sheet conforming to ASTM Specification A 525 and AASHTO Designation M 218. Dimple band couplers shall not be used.

Coupling bands shall be fastened using a minimum of three (3) ½ inch diameter galvanized bolts. Culverts 48 inches and larger require 24 inch wide bands with a minimum of four (4) ½ inch diameter rods and "silo" type lugs.

Acceptance

Acceptance of corrugated steel culvert pipe and its accessories will be based on, but not limited to, visual inspections, classification requirements and check samples taken from material delivered to the project and conformance to the annual Brand Registration. Culvert pipe materials not meeting the above requirements will be rejected, unless written approval is obtained from the State Materials Engineer.

Pipe Installation

Install pipe, pipe tees and elbows according to Section 300 of NCDOT Standard Specifications including the following:

BCCMP with a diameter of 42 inches or larger shall be field strutted (if not manufacturer strutted). Ties and struts shall be removed by the Contractor upon completion of the embankment.

The Contractor shall submit to the Railroad Engineer and the NCDOT Engineer a complete plan and schedule for pipe installation 2 weeks prior to the expected commencement of work. The submission shall include complete details of the proposed inlet and outlet invert elevations and locations as fit to field conditions, bracing for the protection of Railroad roadbed, materials and equipment pertinent to the operation. The Contractor shall not proceed with the pipe installation until he has received acceptance of the plan and schedule from the Railroad Engineer and the NCDOT Engineer.

Where BCCMP has to be cut to achieve the proper length, such cutting shall be done with an abrasive saw so as to prevent damage to the pipe coating. Flame cutting shall not be permitted. Damage to the shop coating by this or any other work shall be field repaired by the Contractor by using asphalt paint. Repairs shall be at no cost to the Department or the Railroad.

Measurement and Payment

Pipe will be measured and paid as the actual number of linear feet of pipe that has been incorporated into the completed and accepted work. Measurement of pipe will be made by counting the number of joints used and multiplying by the length of the joint to obtain the number of linear feet of pipe installed and accepted. Measurements of partial joints will be made along the longest length of the partial joint to the nearest 0.1 ft. Select bedding and backfill material will be included in the cost of the installed pipe.

Payment will be made under:

Pay Item	**Pay Unit**
__" B.C.C.M. Pipe Culverts, __" Thick	Linear Foot
__" B.C.C.M. Pipe Elbows, __" Thick	Each

ENDWALLS

The work shall be performed in accordance with Section 838, "Endwalls", of the Standard Specifications, except that the contractor shall not use Class B concrete or masonry to construct endwalls located on the railroad right-of-way. All endwalls located on the railroad right-of-way, cast-in-place or precast, shall be constructed of Class AA concrete.

REMOVE EXISTING HEADWALLS

Description

The contractor shall remove existing headwalls at locations shown on the plans.

Construction Methods

The contractor shall remove and dispose of existing headwalls at locations shown on the plans after the pipes they are attached to are abandoned and filled with flowable fill in accordance with the Standard Specifications.

Measurement and Payment

No separate measurement or payment will be made for removal of existing headwalls as such will be considered to be part of the work being paid for as *Grading*.

RAILROAD TRACK TO BE REMOVED

The Department's Contractor shall remove the existing siding track as shown in the plans and dispose of the materials appropriately in accordance with local regulations.

Description

Furnish the labor, materials, tools and equipment necessary to remove the existing track which includes the rail, crossties, tie plates, anchors, spikes and disposal of the materials.

Ownership of Material

All salvaged material from the removal of the existing track shall remain the property of the Department's Contractor except for the wooden cross ties. The cross ties will remain the property of NSR and shall be removed and neatly stacked at a location directed by the

Railroad Engineer. The contractor shall give consideration to the salvage value of the materials when making his bid.

Measurement and Payment

The quantity of "Railroad Track to be Removed", which is to be paid for, will be the actual number of track feet of track which is acceptably removed, measured between the rails along the center line of the track prior to the track being removed.

Payment will be made under:

Pay Item	Pay Unit
Railroad Track to be Removed	TF

EMBANKMENT

This work shall be performed in accordance with Section 235,"EMBANKMENTS", of the Standard Specifications including the following:

All earth fills shall be made in uniform layers of not more than 6 inches thick after compaction. Rock may be placed in compacted layers of not more than 24 inches thick. Each fully compacted layer shall extend the full width of the cross section. Each layer shall be free from mud, snow, ice, or excessive (standing) water before a subsequent layer is placed.

Sandy or rocky material shall be spread in full width layers to form drainage planes from the center through the edge of the embankment. Pockets of open materials surrounded by more impervious material shall be avoided.

The fills shall be formed with suitable materials from on-site cuts and/or necessary suitable material from borrow pits. Organic material such as brush, stumps, roots and trees or other perishable items shall not be placed in embankments. Coal or organic shale shall not be included in the embankment. In fill sections, after stripping the topsoil and organic material, the entire area which the embankment is to be placed shall be plowed and scarified for a minimum depth of 6 inches.

The initial lift and all future fill layers shall be compacted to 95 percent of maximum density per Standard Proctor in accordance with ASTM D698-T and AASHTO T 99, or 90 percent of maximum density per Modified Proctor in accordance with ASTM D-1557AASHTO T180, except that a minimum of the top **2 feet of fill shall be compacted to 100 percent Standard Proctor.**

The top 12 inches of the subgrade in all cut sections that will be cut to subgrade elevation shall be plowed, scarified and compacted to 100 percent Standard Proctor. The Engineer shall determine the AASHTO test method to be used after review of the soil analysis.

The Contractor shall notify the Engineer of when fill layers are ready for compaction testing. Successive layers shall not be placed prior to an acceptable density being obtained on each layer. The moisture content of the soil shall be controlled as necessary to obtain the specified densities based upon the optimum moisture content for each material. Water shall be added to the soil when, in the opinion of the Engineer, additional moisture may be necessary to obtain the specified density. Soil that is too wet shall be allowed to dry or be worked by plowing, discing, harrowing, or other means to dry the material to a workable moisture content.

In the event a specified density is not obtained, the Engineer may order additional rolling, watering, or drying of the soil as necessary to obtain the specified density. Fill layers not meeting a specified density after additional working shall be removed and new material shall be placed and compacted to the specified density at no cost to the Department.

The Contractor may be restricted from using partial or completed roadbed as construction haul roads. Any embankment or roadbed that is damaged by hauling activities shall be repaired by the

Contractor at no cost to the Department.

SUB-BALLAST

Description

The Contractor will furnish and place sub-ballast as shown in the plans. The sub-ballast shall be placed after the subgrade has been graded, compacted and accepted.

Materials

The sub-ballast shall be composed of crusher-run granite, meeting the following requirements and the gradation shown in Table 1:

- Sub ballast shall be produced from sound rock meeting the gradations shown in the table 1 (AASHTO T 27 and T 11, AASHTO T 88 as modified for Base Course and Stabilizer).
- The material shall be free from organics and deleterious material (AASHTO T 112).
- The material shall not have a Liquid Limit (LL) in excess of 25 (AASHTO T 89) or a Plasticity Index (PI) in excess of 6 (AASHTO T 90).
- The material shall have a percentage of wear (LA Abrasion, AASHTO T 96) no greater than 50 percent.
- The material shall meet NCDOT's soundness requirements (AASHTO T 104).

	Percent Passing Standard Sieve Size by Weight					
Sieve Size	2"	1"	3/8"	#10	#40	#200
Sub-ballast	100	90-100	50-84	26-50	12-30	5-12

Table 1 **Sub-ballast**

Construction Methods

After the subgrade has been finished to proper grade and cross-section, the sub-ballast shall be placed on the subgrade with a mechanical spreader capable of placing the material in a uniform loose depth and without segregation, except for areas inaccessible to a mechanical spreader. The aggregate material may be placed by other methods approved by the Engineer. The sub-ballast section shall be constructed in two layers of equal thickness. Each layer of sub-ballast shall be fully compacted in lifts not to exceed 6" in thickness after compaction. Each layer of sub-ballast shall be compacted to a density of 100% of the Standard Proctor determined by AASHTO T 180 and maintained to the required cross-section during compaction. Moisture content shall be maintained within 2% +/- of optimum moisture to obtain the desired density. Water shall be added to the material if necessary to obtain the desired density. If the material is to wet too obtain the desired density, the material shall be worked by discing, harrowing or other means to dry the material to a workable moisture content.

Measurement and Payment

The quantity for *Sub-Ballast* to be paid for will be the actual number of tons of sub-ballast which has been used to construct the track roadbed sections, measured as provided for in Article 520-11 of the Standard Specifications. Such price and payment will be full compensation for all furnishing, weighing, hauling, and placing of sub-ballast and for any other work necessary for the construction of the track roadbed section.

Pay Item	**Pay Unit**
Sub-ballast	Ton

MAINTENANCE OF TRACK ROADBED (Special)

The Contractor shall be responsible for the maintenance of the track roadbed during the construction period. Ditches and temporary pipes shall be provided and maintained as may be necessary to satisfactorily drain the sub-grade. Where previously approved sub-grade is damaged by natural causes, by hauling equipment or other traffic the Contractor shall restore the sub-grade to the required lines, grades and typical sections and to the required density at no additional cost to the Department. There will be no direct payment for maintenance of the track roadbed. All cost associated with maintaining the track roadbed will be incidental to other items of work.

RIGHT OF WAY GATE **(Special)**

Description

Furnish and erect right of way gates in conformity with the details shown in the plans and at the locations shown in the plans.

Materials

Item Section

2" OD steel pipe, schedule 80
3 ½" OD steel pipe, schedule 80
4" OD steel pipe, schedule 80
Fittings and Accessories as shown

Use Class B concrete for anchors. Instead of Class B concrete, pre-mixed commercially bagged dry concrete mix may be used if the concrete meets the minimum strength requirements for Class B concrete when mixed with the quantity of water shown on the instructions printed on the bag.

Construction Methods

Setting Posts and Braces

Set posts in concrete anchors to maintain the position and alignment of the post as shown in the details in the plans. Forms are not required for the concrete. Trowel the top of the concrete to a smooth finish and slope to drain away from the post. The concrete anchors require at least a 3 day curing period before any load is placed on the post.

Fabrication

The gate shall be fabricated and painted yellow as shown on the details in the plans. The welding will be done by a certified welder.

Measurement and Payment

Right of Way Gate, will be measured and paid each for the number of gates actually erected on the project.

The above prices and payments will be full compensation for all work covered by this provision including but not limited to furnishing concrete, steel pipe, hardware and all other materials; fabrication, painting and erection of the right of way gates; and incidentals necessary to complete the work as shown on the plans.

Pay Item	**Pay Unit**
Right of Way Gate	Each

EXCAVATION:

This work shall be performed in accordance with Section 225, "ROADWAY EXCAVATION" of the Standard Specifications. The applicable typical roadbed template will be maintained throughout the railway portion of the project.

Material excavated within the proximities of existing track(s), as defined in the table below, shall be used in embankment within the railroad right of way. Any of this material that is not used in construction of the project shall be disposed of within the railroad right of way within the project limits, and the contractor shall submit, to the Engineer for approval, a plan showing locations and methods of placement for this disposal. The limits where this requirement applies are:

P-5206B (Part I) Excavation Limits:

Begin Station	End Station	Left Limit	Right Limit
M1 9011+00	M1 9018+85	20' Left of Centerline Existing Main Track #1	20' Right of Centerline Existing Main Track #2
M1 9018+85	M1 9027+50	33' Left of Centerline Existing Main Track #1	20' Right of Centerline Existing Main Track #1

M1 9027+50	M1 9191+00	20' Left of Centerline Existing Main Track #1	33' Right of Centerline Existing Main Track #1
M1 9179+00	M1 9184+00	20' Left of Centerline Existing Spur Track	20' Right of Centerline Existing Spur Track
M1 9189+00	M1 9197+00	20' Left of Centerline Existing Spur Track	20' Right of Centerline Existing Spur Track
M1 9191+00	M1 9218+00	33' Left of Centerline Existing Main Track #1	20' Right of Centerline Existing Main Track #1

P-5206C (Part II) Excavation Limits:

Begin Station	End Station	Left Limit	Right Limit
M1 9218+02.82	M1 9308+32.00	33' Left of Centerline Existing Main Track #1	20' Right of Centerline Existing Main Track #1
M1 9308+32.00	M1 9316+60.00	20' Left of Centerline Existing Main Track #1	20' Right of Centerline Existing Siding Track
M1 9217+50.00	M1 9326+00.00	20' Left of Centerline Existing Main Track #1	20' Right of Centerline Abandoned Siding Track
M1 9326+00.00	M1 9334+53.00	20' Left of Centerline Existing Main Track #1	20' Right of Centerline Abandoned Siding Track
M1 9335+63.00	M1 9450+00.00	20' Left of Centerline Existing Main Track #1	33' Right of Centerline Existing Main Track #1

P-5206D (Part III) Excavation Limits:

Begin Station	End Station	Left Limit	Right Limit
M1 9450+00	M1 9546+20	20' Left of Centerline Existing Main Track #1	33' Right of Centerline Existing Main Track #1
M1 9546+20	M1 9561+00	33' Left of Centerline Existing Main Track #1	33' Right of Centerline Existing Main Track #1
M1 9561+00	M1 9565+00	20' Left of Centerline Existing Main Track #1	20' Right of Centerline Existing Main Track #2

SUBSURFACE DRAIN

Description

Construct and install subsurface drain pipes, outlet pipes and concrete pads for outlet pipes, in accordance with the detail drawing in the plans and requirements of the contract.

Materials

Refer to Division 10 of the *Standard Specifications.*

Item	Section
Shoulder Drain Aggregate, No. 57 Stone	1005
6" HDPE AASHTO M294 TYPE S	1044-8
6" HDPE AASHTO M294 TYPE S Outlet Pipe	1044-8
Geotextile for Subsurface Drains, Type 1	1056
Portland Cement Concrete, Class AA	1000

Material for the subsurface drain pipe and fittings shall be 6" HDPE conforming to AASHTO M294 Type S. The 6" HDPE shall be perforated and the perforation size and spacing shall conform to ASTM C 444, Type 1.

Construction Methods

Place and compact the sub-ballast in accordance with the plans and place and compact the 6" asphalt underlayment (where applicable) as shown on the plans. After placing the asphalt underlayment (where applicable), install the subsurface drain/shoulder drain in accordance with the plans.

Excavate the trench to the width shown on the plans, and to the depth, line and grade established by the Engineer.

Place the geotextile in accordance with the detail in the plans. Do not leave fabric uncovered for more than 7 days. Install geotextile such that all splice joints are provided with a minimum overlap of 2 feet. Overlap the closure at the top of the trench at least 6 " and secure with mechanical ties. Where outlet pipe passes through the fabric, wrap a separate piece of fabric around the outlet pipe, flare against the side of the filled drain, and secure with anchor pins.

Anchor field splices of geotextile with anchor pins to ensure that required overlap is maintained.

Place 3" of the subdrain course aggregate as shown in the detail in the plans. Lay perforated pipe with the perforations down. Perform the remainder of the aggregate placement operations to prevent damage to the geotextile and pipe. Replace damaged sections of geotextile and pipe at no cost to the Department.

Outlet pipe shall meet the requirements of Article 1044-6 of the *Standard Specifications.* Use solvent cement to bond the SCH-80 pipe and fittings together. Obtain approval for all pipe fittings from the Engineer prior to delivery. Protect the open end of all outlet pipes with

a galvanized rodent screen as shown in plans.

Install outlet fittings and outlet pipes as shown on plans, every 500 ft, or as otherwise directed by the Engineer. Establish positive drainage within 72 hours of beginning trenching for installation of a given section of aggregate subsurface drain/shoulder drain. Failure to comply with this requirement may result in the Engineer restricting installation of additional sections of aggregate subsurface drain/shoulder drain until such time as the Contractor completes appropriate outlet installations.

Compact the aggregate to a degree acceptable to the Engineer by the use of a vibratory compactor before making the geotextile closure at the top of the trench.

Carefully place the #57 stone backfill material after the pipe has been laid and the geotextile is closed at the top, so that the pipe will not be disturbed by the backfilling operation. Compact the remainder of the backfill material (#57) stone to a degree acceptable to the Engineer by the use of a vibratory compactor.

Connect the outlet pipes to concrete pads at the outlet end of the subsurface drain. Construct the concrete pad in accordance with Section 825 of the *Standard Specifications* and give an ordinary surface finish. Use Class AA concrete.

Measurement and Payment

Subsurface Drain will be measured and paid as the actual number of linear feet that has been completed and accepted, measured to the nearest foot along the centerline of the completed subsurface drain pipe. No measurement will be made along the outlet pipe.

Such price and payment includes, but is not limited to, furnishing, hauling, and placing all subsurface drain pipe, fittings, aggregate, geotextile, and other materials; making all joint connections and all excavation and backfilling.

Subdrain Pipe Outlet and *6" Outlet Pipe* will be measured and paid for in accordance with Article 815-4 of the *Standard Specifications*.

Payment will be made under:

Pay Item	Pay Unit
Subsurface Drain	Linear Foot

TEMPORARY WOVEN WIRE FENCE

Description

Construct a temporary 60" woven wire fence at locations directed by the Engineer. Use only fabric and posts that have been approved by the Engineer. Provide post spacing of 12 feet. Construct the fence and maintain it with the fabric taut and securely fastened to the posts at all times.

After the fence has served its purpose and is no longer needed, as determined by the Engineer, it becomes the property of the Contractor.

Measurement and Payment

Temporary 60" Woven Wire Fence, Complete with Posts will be measured and paid as the actual number of linear feet of fence constructed and accepted, measured in place from center of end post to center of end post. Such price and payment will be full compensation for all materials, labor, fence maintenance, and incidentals necessary to satisfactorily complete the work.

Payment will be made under:

Pay Item	Pay Unit
Temporary 60" Woven Wire Fence, Complete with Posts	Linear Foot

PROJECT SPECIAL PROVISIONS - STRUCTURES

NCRR/NS MAINLINE GRADE SEPARATION OVER KIMBALL ROAD

ROWAN COUNTY, NC

P-5206C

STA. P.O.C. 9404+63.64 -M1- =
STA. P.O.T. 13+69.47 -Y10-

NORFOLK SOUTHERN RAILWAY MILEPOST: 344.50

NORTH CAROLINA PROFESSIONAL SEAL 22992 ENGINEER RAY D. ELLIOTT

9/4/2013

BRIDGE REPLACEMENT MP S-56.67

Table of Contents

Title Page 1
Table of Contents 2
Temporary Railroad Shoring (Special) 3
Foundation Excavation (Special) 3
Portland Cement (Special) 4
Fine and Course Aggregate (Special) 4
Waterstops (Special) 4
Elastomeric Flashing (Special) 5
Rubber Joint Compounds (Special) 5
Waterproofing (Special) 5

Structure Drainage System (Special) 6
Conduit In Parapets (Special) 6
Backfilling around Structures (Special) 7
Self-Lubricating Expansion Bearing Assemblies (Special) 7
Metal Fencing and Handrail (Special) 9
Falsework and Formwork (10-12-01) 9
Submittal of Working Drawings (6-7-05) 16
Crane Safety (8-15-05) 22

Grout For Structure (9-30-11) 23
Fabrication of Structural Steel (Special) 24
Protection of Painted Steel (Special) 27

Norfolk Southern Paint Specifications (Special) 28
Norfolk Southern Specifications for Structural Steel (Special) 33

The "Standard Specifications for Roads and Structures, January 2012" of the North Carolina Department of Transportation, hereinafter referred to as the Standard Specifications, shall apply to the articles of the Project Special Provisions.

TEMPORARY RAILROAD SHORING (SPECIAL)

GENERAL

Provide temporary railroad shoring for each abutment, pier, and additional sections along the existing track indicated in the plans in accordance with the Standard Specifications and this Special Provision.

ALTERNATE DESIGN AND PLANS

The submittal of an alternate design and plans for excavation and shoring is permitted in lieu of the excavation and shoring detailed on the plans. The alternate design shall be in accordance with the current railway design criteria. Have the alternate design computations and plans sealed by a North Carolina Registered Professional Engineer and submit them for review, comments and acceptance. After the appropriate State agency accepts them, they are submitted by the State agency to the Railroad for review, comments and acceptance. Allow a minimum of 30 days for the Railroad's review. Do not begin excavation at the excavation site or sites in question until the Engineer confirms that both the State and Railroad accept the alternate design and plans. No extension of intermediate completion dates and/or final completion dates will be allowed due to delays in review of alternate excavation and shoring design and plans.

BASIS OF PAYMENT

Payment for the temporary railroad shoring will be made at the lump sum price bid for "Temporary Railroad Shoring" along the existing track, along each abutment, and around each pier. Such lump sum price will be full compensation for all materials, equipment, tools, labor, and incidentals necessary to complete the work. All shoring materials must be "like new".

FOUNDATION EXCAVATION (Special)

The Standard Specifications shall be revised as follows: Foundation Excavation for Piers shall be in accordance with Section 410 of the Standard Specifications with the following exception.

Payment will be made under:
Foundation Excavation for Pier _____ at Station _____Lump Sum

PORTLAND CEMENT **(Special)**

Portland cement shall meet the requirements of the Standard Specifications for the type specified for the work. In addition to the other requirements, in order to prevent alkali reaction in concrete, all cement used on the railroad structure shall have a low alkali content. The total percentage of the sodium oxide (Na_2 O) present, plus 0.658 times the total percentage of potassium oxide (K_20) present, shall not exceed 0.60 percent. The Contractor shall furnish the Engineer with two (2) copies of certified mill test reports from the manufacturer of all cement, stating that the above requirements have been complied with.

No substitution of fly ash, blast furnace slag or other material will be permitted in meeting these minimum cement requirements.

FINE AND COURSE AGGREGATE **(Special)**

The fine and coarse aggregates used in all concrete on the railway structure shall be non-reactive in accordance with the "Method of Test for Potential Reactivity of Aggregates (Chemical Method)", ASTM Designation C289-81. The Contractor shall furnish the Engineer with two (2) copies of the above test reports certifying that the fine and coarse aggregates are non-reactive and will not cause an alkali reaction.

WATERSTOPS **(Special)**

Waterstops shall be made of an approved flexible polyvinyl-chloride plastic, conforming to the U.S. Corps of Engineers Specification CRD-C-572-74, or rubber conforming to U.S. Corps of Engineers Specification CRD-C-513-75. Waterstops shall be made in the shape and of the material specified on the plans. The material shall form a continuous waterstop across the slab and up the curb of bridge decks, in abutment wings, or other locations as shown on the plans. Waterstops shall be fabricated in continuous units without splice, using material of the longest length available. Where bonded joints are necessary, like materials shall be bonded together by experienced men in accordance with the manufacturer's instructions. The entire cost of the waterstop, complete in place, shall be included in the unit contract price bid for "Reinforced Concrete Deck Slab."

ELASTOMERIC FLASHING **(Special)**

The elastomeric flashing at the expansion joint between deck slabs shall be a continuous sheet of synthetic rubber 1/16" thick by 10" wide, or equal based on polychloroprene having properties

specified by the following test data:

Tensile Strength	ASTM D-412-80	13.8 MPa minimum
Elongation	ASTM D-412-80	300% minimum
Hardness	ASTM D-2240-81	60 " 10
Water Absorption	ASTM D-471-79	10% maximum

The adhesive for use with the flashing shall be as recommended by the manufacturer of the synthetic rubber furnished and shall be applied according to manufacturer's instructions.

The entire cost of the elastomeric flashing, complete in place, shall be included in the unit contract price bid for "Reinforced Concrete Deck Slab."

RUBBER JOINT COMPOUNDS (Special)

Expansion joints shall be sealed with a two component elastomeric polymer type cold-applied synthetic joint sealer, manufactured with thiokol polysulfide liquid polymers. The material shall be grey polysulfide rubber base caulking compound conforming to Specification ANSI A-116.1. Pouring type compound shall be used for horizontal joints and non-sag type for other joints. The mixing and application of the joint sealing compound shall be performed with the equipment recommended and in strict accordance with the manufacturer's instructions. The entire cost of the rubber joint compounds shall be included in the unit contract price bid for "Reinforced Concrete Deck Slab."

WATERPROOFING (Special)

Waterproofing for protection of concrete surfaces on substructure to be backfilled against shall consist of a two (2) part system having a membrane layer and a protection course layer meeting the requirements of the American Railway Engineering and Maintenance of Way Association's (AREMA) Manual of Railway Engineering Chapter 29, Waterproofing.

The Waterproofing shall be installed per manufacture's instructions. The entire cost of the two 2) part system shall be included in the unit contract price bid per sq. yard for "Two Part Membrane Waterproofing System".

Waterproofing for protection of the concrete deck shall consist of a two (2) part system having a membrane layer and an asphalt plank, or other Railroad approved, protection course meeting the requirements of the AREMA Manual Chapter 29, Waterproofing.

The Waterproofing shall be installed per manufacture's instructions. The entire cost of the membrane waterproofing shall be included in the unit contract price bid per sq. yard for "Membrane Layer Waterproofing For Deck".

The entire cost of the Asphalt Plank shall be included in the unit contract price bid per sq. yard

for "one inch Asphalt Planking Protective Course For Deck".

The Contractor has the option to use a polyurethane based membrane waterproofing system on the deck in lieu Of the Asphalt Plank when approved by the Engineer.

STRUCTURE DRAINAGE SYSTEM (Special)

A. Materials: Ductile iron pipe collector system shall be as detailed and specified on the plans. French drain material behind abutments shall be No. 467M crushed stone or gravel conforming to Table 1005-1, Aggregate Gradation.

B. Installation: Deck drains shall be located as shown on the plans. The ductile iron pipe collector system shall be installed as detailed and specified on the plans.

Perforated pipe drains behind the abutments shall be laid with perforations turned down and bedded on a layer of compacted impervious clay. The perforations shall be kept open and free from the clay bedding course, asphalt coating, or other materials. The french drain material shall be placed concurrently with the backfill and shall be kept separate with a thin timber slide or burlap bag. Perforated pipe behind abutments and outfall pipes shall be laid on a grade of at least one percent (1%) and shall be as shown on the plans. Grades of pipe drains shall be set by the Engineer. Copies of shop drawing details of the drainage system shall be submitted by the Contractor to the Department of Transportation for approval. The drainage system must be approved before fabrication.

C. Basis of Payment: Payment for the "Structure Drainage System, Sta._____" will be made at the contract lump sum price bid, which price and payment shall be full compensation for furnishing all materials and labor to install the drainage system complete, including corrugated metal and ductile iron pipe, deck drains, fittings, excavation, french drain material, pipe sleeves inserts, other backfill and outfall pipes.

CONDUIT IN PARAPETS (Special)

Conduit in the parapets shall be 4" diameter PVC conduit conforming to applicable Underwriters Laboratory specifications and shall be located as shown on the Plans. Provisions shall be made for expansion between the deck slab and abutment backwalls and between deck slabs at expansion joints. Couplings shall be provided behind backwalls for connection to the 4" diameter rigid pipe. If non-PVC fittings, couplings, or other incidental items are required, they must be fully compatible with PVC conduit. Details and material data shall be submitted by the Contractor to the Engineer for approval by the Railroad Company of all materials required for this work. The entire cost of furnishing and installing all conduit, expansion fittings, couplings and incidental items required for this work shall be included in the lump sum bid price for "4" Diameter Signal Conduit System at Sta. 9404+63.64."

BACKFILLING AROUND STRUCTURES (Special)

Backfill material behind abutments (except No. 467M crushed stone or gravel for french drains over perforated drain pipes) shall be Type A Aggregate Base Course (ABC) in accordance with the Standard Specifications. Placing and compacting shall be as provided for in Section 410-9 of the Standard Specifications.

Backfill around structures, except as specified above, shall be suitable material available from the excavations. In the event material excavated is not approved for use as backfill by the Engineer, the Contractor will be required to furnish and haul to the structure site necessary suitable backfill material. Placing and compacting shall be as provided in Section 410-9 of the Standard Specifications.

Disposal of surplus excavated material shall be as specified in Section 410-1 of the Standard Specifications.

Payment for furnishing ABC backfill material and any suitable material to replace excavated material and for placing and compacting all backfill material shall be included in the contract unit price for other pay items.

SELF-LUBRICATING EXPANSION BEARING ASSEMBLIES (Special)

Description:

The self-lubricating expansion bearing assemblies shall each consist of an oilless self-lubricating copper alloy plate, a sole plate, a sliding plate with keeper bars, a masonry plate, any necessary fill plates, bearing pad, anchor bolt assembly which includes anchor bolts, nuts, washers, pipe, and any other necessary material as detailed on the plans. These bearing assemblies are located at the expansion ends of applicable spans as shown on the plans.

Requirements:
The self-lubricating copper alloy bearing plates shall be an approved article of standard production by an established manufacturer of such equipment installed in accordance with the manufacturer of such equipment installed in accordance with the manufacturer's recommendations and shall conform to the following requirements:

(A) The copper alloy shall conform to AASHTO M107 Alloy 911 or AASHTO M108 Alloy 510.

(B) The lubricant shall be of the solid type and shall consist of graphite, metallic substances having lubricating properties and a lubricating binder. Materials which do not have lubricating qualities or which promote chemical or electrolytic reactions, will not be acceptable. The lubricant shall be integrally molded and compressed into the lubrication

recesses to form a dense, non-plastic lubricant.

(C) The recesses shall be arranged in a geometric pattern such that successive rows shall overlap in the direction of motion and the distance between extremities of recesses shall be closer in the direction of motion than that perpendicular to motion. The entire bearing area of all surfaces which have provisions for motion shall be lubricated by means of these lubricant filled recesses. The total area of these recesses shall comprise not less than 25 % nor more than 35 % of the total bearing area of the plate.

(D). The bearing plates shall be furnished to the sizes specified on the drawings. Bearing surfaces shall be machine finished and the surface roughness shall not exceed 125 micro inches(3.18 microns) when measured in accordance with ASA Standard B46.1-1955. Also, the bearing surfaces of the opposing steel plates shall also be finished as above. Align the tool marks shall be in the direction of motion. Finish the bearing surfaces so that all machine surfaces shall be flat within 0.0005 inch per inch of length and width.

(E) For mating curved surfaces of steel and copper alloy ,the maximum positive tolerance for the concave surface is 0.010 inch and the maximum negative tolerance for the convex surface is 0.010 inch.

(F) The coefficient of friction between the copper alloy self-lubricating plates and the steel plates in contact with them shall not exceed 0.10 when subjected to the designed unit loading and also at twice the designed unit loading.

Payment for the bearing assemblies shall be at the contract lump sum price bid for "Self-lubricating Expansion Bearing Assemblies". This price shall be full compensation for all materials, tools, equipment, labor and incidentals necessary to furnish and install the self-lubricating bearing assemblies.

Payment for the Fixed Bearing Assemblies as shown on plans shall be included in the Lump Sum price bid for structural steel.

METAL FENCE AND HANDRAIL (Special)

The Metal Fence and Handrail shall be constructed as shown on the plans. The quantity of Metal Fence and Handrail to be paid for will be the actual number of linear feet of metal fence and handrail, measured along the top bar of the rail, on the abutment wing walls and on the bridge superstructure, which has been completed and accepted. The quantities of Metal Fence and Handrail, measured as provided herein, will be paid for at the contract unit price per linear feet for "Metal Fence and Handrail".

The above prices and payments will be full compensation for all work covered by this provision including but not limited to furnishing posts, rail bars, base plates, anchor cords, hardware and all other materials; fabrication and erection of the metal fence and handrail; and incidentals necessary to complete the work as shown on the plans.

FALSEWORK AND FORMWORK (4-5-12)

1.0 DESCRIPTION

Use this Special Provision as a guide to develop temporary works submittals required by the Standard Specifications or other provisions; no additional submittals are required herein. Such temporary works include, but are not limited to, falsework and formwork.

Falsework is any temporary construction used to support the permanent structure until it becomes self-supporting. Formwork is the temporary structure or mold used to retain plastic or fluid concrete in its designated shape until it hardens. Access scaffolding is a temporary structure that functions as a work platform that supports construction personnel, materials, and tools, but is not intended to support the structure. Scaffolding systems that are used to temporarily support permanent structures (as opposed to functioning as work platforms) are considered to be falsework under the definitions given. Shoring is a component of falsework such as horizontal, vertical, or inclined support members. Where the term "temporary works" is used, it includes all of the temporary facilities used in bridge construction that do not become part of the permanent structure.

Design and construct safe and adequate temporary works that will support all loads imposed and provide the necessary rigidity to achieve the lines and grades shown on the plans in the final structure.

2.0 MATERIALS

Select materials suitable for temporary works; however, select materials that also ensure the safety and quality required by the design assumptions. The Engineer has authority to reject material on the basis of its condition, inappropriate use, safety, or nonconformance with the plans. Clearly identify allowable loads or stresses for all materials or manufactured devices on

the plans. Revise the plan and notify the Engineer if any change to materials or material strengths is required.

3.0 DESIGN REQUIREMENTS

A. Working Drawings

Provide working drawings for items as specified in the contract, or as required by the Engineer, with design calculations and supporting data in sufficient detail to permit a structural and safety review of the proposed design of the temporary work.

On the drawings, show all information necessary to allow the design of any component to be checked independently as determined by the Engineer.

When concrete placement is involved, include data such as the drawings of proposed sequence, rate of placement, direction of placement, and location of all construction joints. Submit the number of copies as called for by the contract.

When required, have the drawings and calculations prepared under the guidance of, and sealed by, a North Carolina Registered Professional Engineer who is knowledgeable in temporary works design.

If requested by the Engineer, submit with the working drawings manufacturer's catalog data listing the weight of all construction equipment that will be supported on the temporary work. Show anticipated total settlements and/or deflections of falsework and forms on the working drawings. Include falsework footing settlements, joint take-up, and deflection of beams or girders.

As an option for the Contractor, overhang falsework hangers may be uniformly spaced, at a maximum of 36 inches, provided the following conditions are met:

Member Type (PCG)	Member Depth, (inches)	Max. Overhang Width, (inches)	Max. Slab Edge Thickness, (inches)	Max. Screed Wheel Weight, (lbs.)	Bracket Min. Vertical Leg Extension, (inches)
II	36	39	14	2000	26
III	45	42	14	2000	35
IV	54	45	14	2000	44
MBT	63	51	12	2000	50
MBT	72	55	12	1700	48

Overhang width is measured from the centerline of the girder to the edge of the deck slab.

For Type II, III & IV prestressed concrete girders (PCG), 45-degree cast-in-place half hangers and rods must have a minimum safe working load of 6,000 lbs.

For MBT prestressed concrete girders, 45-degree angle holes for falsework hanger rods shall be cast through the girder top flange and located, measuring along the top of the member, 1'-2 ½" from the edge of the top flange. Hanger hardware and rods must have a minimum safe working load of 6,000 lbs.

The overhang bracket provided for the diagonal leg shall have a minimum safe working load of 3,750 lbs. The vertical leg of the bracket shall extend to the point that the heel bears on the girder bottom flange, no closer than 4 inches from the bottom of the member. However, for 72-inch members, the heel of the bracket shall bear on the web, near the bottom flange transition.

Provide adequate overhang falsework and determine the appropriate adjustments for deck geometry, equipment, casting procedures and casting conditions.

If the optional overhang falsework spacing is used, indicate this on the falsework submittal and advise the girder producer of the proposed details. Failure to notify the Engineer of hanger type and hanger spacing on prestressed concrete girder casting drawings may delay the approval of those drawings.

Falsework hangers that support concentrated loads and are installed at the edge of thin top flange concrete girders (such as bulb tee girders) shall be spaced so as not to exceed 75% of the manufacturer's stated safe working load. Use of dual leg hangers (such as Meadow Burke HF-42 and HF-43) are not allowed on concrete girders with thin top flanges. Design the falsework and forms supporting deck slabs and overhangs on girder bridges so that there will be no differential settlement between the girders and the deck forms during placement of deck concrete.

When staged construction of the bridge deck is required, detail falsework and forms for screed and fluid concrete loads to be independent of any previous deck pour components when the mid-span girder deflection due to deck weight is greater than ¾".

Note on the working drawings any anchorages, connectors, inserts, steel sleeves or other such devices used as part of the falsework or formwork that remains in the permanent structure. If the plan notes indicate that the structure contains the necessary corrosion protection required for a Corrosive Site, epoxy coat, galvanize or metalize these devices. Electroplating will not be allowed. Any coating required by the Engineer will be considered incidental to the various pay items requiring temporary works.

Design falsework and formwork requiring submittals in accordance with the 1995 AASHTO *Guide Design Specifications for Bridge Temporary Works* except as noted herein.

1. Wind Loads

   Table 2.2 of Article 2.2.5.1 is modified to include wind velocities up to 110 mph. In addition, Table 2.2A is included to provide the maximum wind speeds by county in North Carolina.

Table 2.2 - Wind Pressure Values

Height Zone feet above ground	Pressure, lb/ft^2 for Indicated Wind Velocity, mph				
	70	80	90	100	110
0 to 30	15	20	25	30	35
30 to 50	20	25	30	35	40
50 to 100	25	30	35	40	45
over 100	30	35	40	45	50

2. Time of Removal

The following requirements replace those of Article 3.4.8.2.

Do not remove forms until the concrete has attained strengths required in Article 420-16 of the Standard Specifications and these Special Provisions.

Do not remove forms until the concrete has sufficient strength to prevent damage to the surface.

Table 2.2A - Steady State Maximum Wind Speeds by Counties in North Carolina

COUNTY	25 YR (mph)	COUNTY	25 YR (mph)	COUNTY	25 YR (mph)
Alamance	70	Franklin	70	Pamlico	100
Alexander	70	Gaston	70	Pasquotank	100
Alleghany	70	Gates	90	Pender	100
Anson	70	Graham	80	Perquimans	100
Ashe	70	Granville	70	Person	70
Avery	70	Greene	80	Pitt	90
Beaufort	100	Guilford	70	Polk	80
Bertie	90	Halifax	80	Randolph	70
Bladen	90	Harnett	70	Richmond	70
Brunswick	100	Haywood	80	Robeson	80
Buncombe	80	Henderson	80	Rockingham	70
Burke	70	Hertford	90	Rowan	70
Cabarrus	70	Hoke	70	Rutherford	70
Caldwell	70	Hyde	110	Sampson	90
Camden	100	Iredell	70	Scotland	70
Carteret	110	Jackson	80	Stanley	70
Caswell	70	Johnston	80	Stokes	70
Catawba	70	Jones	100	Surry	70
Cherokee	80	Lee	70	Swain	80
Chatham	70	Lenoir	90	Transylvania	80
Chowan	90	Lincoln	70	Tyrell	100
Clay	80	Macon	80	Union	70
Cleveland	70	Madison	80	Vance	70
Columbus	90	Martin	90	Wake	70
Craven	100	McDowell	70	Warren	70
Cumberland	80	Mecklenburg	70	Washington	100
Currituck	100	Mitchell	70	Watauga	70
Dare	110	Montgomery	70	Wayne	80
Davidson	70	Moore	70	Wilkes	70
Davie	70	Nash	80	Wilson	80
Duplin	90	New Hanover	100	Yadkin	70
Durham	70	Northampton	80	Yancey	70
Edgecombe	80	Onslow	100		
Forsyth	70	Orange	70		

B. Review and Approval

The Engineer is responsible for the review and approval of temporary works' drawings.

Submit the working drawings sufficiently in advance of proposed use to allow for their review, revision (if needed), and approval without delay to the work.

The time period for review of the working drawings does not begin until complete drawings and design calculations, when required, are received by the Engineer.

Do not start construction of any temporary work for which working drawings are required until the drawings have been approved. Such approval does not relieve the Contractor of the responsibility for the accuracy and adequacy of the working drawings.

4.0 CONSTRUCTION REQUIREMENTS

All requirements of Section 420 of the Standard Specifications apply.

Construct temporary works in conformance with the approved working drawings. Ensure that the quality of materials and workmanship employed is consistent with that assumed in the design of the temporary works. Do not weld falsework members to any portion of the permanent structure unless approved. Show any welding to the permanent structure on the approved construction drawings.

Provide tell-tales attached to the forms and extending to the ground, or other means, for accurate measurement of falsework settlement. Make sure that the anticipated compressive settlement and/or deflection of falsework does not exceed 1 inch. For cast-in-place concrete structures, make sure that the calculated deflection of falsework flexural members does not exceed 1/240 of their span regardless of whether or not the deflection is compensated by camber strips.

A. Maintenance and Inspection

Inspect and maintain the temporary work in an acceptable condition throughout the period of its use. Certify that the manufactured devices have been maintained in a condition to allow them to safely carry their rated loads. Clearly mark each piece so that its capacity can be readily determined at the job site.

Perform an in-depth inspection of an applicable portion(s) of the temporary works, in the presence of the Engineer, not more than 24 hours prior to the beginning of each concrete placement. Inspect other temporary works at least once a month to ensure that they are functioning properly. Have a North Carolina Registered Professional Engineer inspect the cofferdams, shoring, sheathing, support of excavation structures, and support systems for load tests prior to loading.

B. Foundations

Determine the safe bearing capacity of the foundation material on which the supports for temporary works rest. If required by the Engineer, conduct load tests to verify proposed bearing capacity values that are marginal or in other high-risk situations.

The use of the foundation support values shown on the contract plans of the permanent structure is permitted if the foundations are on the same level and on the same soil as those of the permanent structure.

Allow for adequate site drainage or soil protection to prevent soil saturation and washout of the soil supporting the temporary works supports.

If piles are used, the estimation of capacities and later confirmation during construction using standard procedures based on the driving characteristics of the pile is permitted. If preferred, use load tests to confirm the estimated capacities; or, if required by the Engineer conduct load tests to verify bearing capacity values that are marginal or in other high risk situations.

The Engineer reviews and approves the proposed pile and soil bearing capacities.

5.0 REMOVAL

Unless otherwise permitted, remove and keep all temporary works upon completion of the work. Do not disturb or otherwise damage the finished work.

Remove temporary works in conformance with the contract documents. Remove them in such a manner as to permit the structure to uniformly and gradually take the stresses due to its own weight.

6.0 METHOD OF MEASUREMENT

Unless otherwise specified, temporary works will not be directly measured.

7.0 BASIS OF PAYMENT

Payment at the contract unit prices for the various pay items requiring temporary works will be full compensation for the above falsework and formwork.

SUBMITTAL OF WORKING DRAWINGS (2-10-12)

1.0 GENERAL

Submit working drawings in accordance with Article 105-2 of the *Standard Specifications* and this provision. For this provision, "submittals" refers to only those listed in this provision. The list of submittals contained herein does not represent a list of required submittals for the project. Submittals are only necessary for those items as required by the contract. Make submittals that are not specifically noted in this provision directly to the Resident Engineer. Either the Structure Design Unit or the Geotechnical Engineering Unit or both units will jointly review submittals.

If a submittal contains variations from plan details or specifications or significantly affects project cost, field construction or operations, discuss the submittal with and submit all copies to the Resident Engineer. State the reason for the proposed variation in the submittal. To minimize review time, make sure all submittals are complete when initially submitted. Provide a contact name and information with each submittal. Direct any questions regarding submittal requirements to the Resident Engineer, Structure Design Unit contacts or the Geotechnical Engineering Unit contacts noted below.

In order to facilitate in-plant inspection by NCDOT and approval of working drawings, provide the name, address and telephone number of the facility where fabrication will actually be done if different than shown on the title block of the submitted working drawings. This includes, but is not limited to, precast concrete items, prestressed concrete items and fabricated steel or aluminum items.

2.0 ADDRESSES AND CONTACTS

For submittals to the Structure Design Unit, use the following addresses:

Via US mail:

Mr. G. R. Perfetti, P. E.
State Structures Engineer
North Carolina Department
of Transportation
Structures Management Unit
1581 Mail Service Center
Raleigh, NC 27699-1581

Attention: Mr. P. D. Lambert, P. E.

Via other delivery service:

Mr. G. R. Perfetti, P. E.
State Structures Engineer
North Carolina Department
of Transportation
Structures Management Unit
1000 Birch Ridge Drive
Raleigh, NC 27610

Attention: Mr. P. D. Lambert, P. E.

Submittals may also be made via email.

Send submittals to:

plambert@ncdot.gov (Paul Lambert)

Send an additional e-copy of the submittal to the following address:

jgaither@ncdot.gov (James Gaither)

jlbolden@ncdot.gov (James Bolden)

For submittals to the Geotechnical Engineering Unit, use the following addresses:

For projects in Divisions 1-7, use the following Eastern Regional Office address:

Via US mail:

Mr. K. J. Kim, Ph. D., P. E.
Eastern Regional Geotechnical Manager
North Carolina Department of Transportation
Geotechnical Engineering Unit
Eastern Regional Office
1570 Mail Service Center
Raleigh, NC 27699-1570

Via other delivery service:

Mr. K. J. Kim, Ph. D., P. E.
Eastern Regional Geotechnical Manager
North Carolina Department of Transportation
Geotechnical Engineering Unit
Eastern Regional Office
3301 Jones Sausage Road, Suite 100
Garner, NC 27529

For projects in Divisions 8-14, use the following Western Regional Office address:

Via US mail:

Mr. John Pilipchuk, L. G., P. E.
Western Regional Geotechnical Manager
North Carolina Department of Transportation
Geotechnical Engineering Unit
Western Regional Office
5253 Z Max Boulevard
Harrisburg, NC 28075

Via other delivery service:

Mr. John Pilipchuk, L. G., P. E.
Western Region Geotechnical Manager
North Carolina Department of Transportation
Geotechnical Engineering Unit
Western Regional Office
5253 Z Max Boulevard
Harrisburg, NC 28075

The status of the review of structure-related submittals sent to the Structure Design Unit can be viewed from the Unit's web site, via the "Contractor Submittal" link.

Direct any questions concerning submittal review status, review comments or drawing markups to the following contacts:

Primary Structures Contact:	Paul Lambert	(919) 707 – 6407 (919) 250 – 4082 facsimile plambert@ncdot.gov
Secondary Structures Contacts:	James Gaither James Bolden	(919) 707 – 6409 (919) 707 – 6408

Eastern Regional Geotechnical Contact (Divisions 1-7):

	K. J. Kim	(919) 662 – 4710 (919) 662 – 3095 facsimile kkim@ncdot.gov

Western Regional Geotechnical Contact (Divisions 8-14):
John Pilipchuk (704) 455 – 8902
(704) 455 – 8912 facsimile
jpilipchuk@ncdot.gov

3.0 SUBMITTAL COPIES

Furnish one complete copy of each submittal, including all attachments, to the Resident Engineer. At the same time, submit the number of hard copies shown below of the same complete submittal directly to the Structure Design Unit and/or the Geotechnical Engineering Unit.

The first table below covers "Structure Submittals". The Resident Engineer will receive review comments and drawing markups for these submittals from the Structure Design Unit. The second table in this section covers "Geotechnical Submittals". The Resident Engineer will receive review comments and drawing markups for these submittals from the Geotechnical Engineering Unit.

Unless otherwise required, submit one set of supporting calculations to either the Structure Design Unit or the Geotechnical Engineering Unit unless both units require submittal copies in which case submit a set of supporting calculations to each unit. Provide additional copies of any submittal as directed.

STRUCTURE SUBMITTALS

Submittal	Copies Required by Structure Design Unit	Copies Required by Geotechnical Engineering Unit	Contract Reference Requiring Submittal [1]
Arch Culvert Falsework	5	0	Plan Note, SN Sheet & "Falsework and Formwork"
Box Culvert Falsework [7]	5	0	Plan Note, SN Sheet & "Falsework and Formwork"
Cofferdams	6	2	Article 410-4
Foam Joint Seals [6]	9	0	"Foam Joint Seals"
Expansion Joint Seals (hold down plate type with base angle)	9	0	"Expansion Joint Seals"
Expansion Joint Seals (modular)	2, then 9	0	"Modular Expansion Joint Seals"

Expansion Joint Seals (strip seals)	9	0	"Strip Seals"
Falsework & Forms [2] (substructure)	8	0	Article 420-3 & "Falsework and Formwork"
Falsework & Forms (superstructure)	8	0	Article 420-3 & "Falsework and Formwork"
Girder Erection over Railroad	5	0	Railroad Provisions
Maintenance and Protection of Traffic Beneath Proposed Structure	8	0	"Maintenance and Protection of Traffic Beneath Proposed Structure at Station ___"
Metal Bridge Railing	8	0	Plan Note
Metal Stay-in-Place Forms	8	0	Article 420-3
Metalwork for Elastomeric Bearings [4,5]	7	0	Article 1072-8
Miscellaneous Metalwork [4,5]	7	0	Article 1072-8
Optional Disc Bearings [4]	8	0	"Optional Disc Bearings"
Overhead and Digital Message Signs (DMS) (metalwork and foundations)	13	0	Applicable Provisions
Placement of Equipment on Structures (cranes, etc.)	7	0	Article 420-20
Pot Bearings [4]	8	0	"Pot Bearings"
Precast Concrete Box Culverts	2, then 1 reproducible	0	"Optional Precast Reinforced Concrete Box Culvert at Station ___"
Prestressed Concrete Cored Slab (detensioning sequences) [3]	6	0	Article 1078-11
Prestressed Concrete Deck Panels	6 and 1 reproducible	0	Article 420-3
Prestressed Concrete Girder (strand elongation and detensioning sequences)	6	0	Articles 1078-8 and 1078-11
Removal of Existing Structure over Railroad	5	0	Railroad Provisions

Revised Bridge Deck Plans (adaptation to prestressed deck panels)	2, then 1 reproducible	0	Article 420-3
Revised Bridge Deck Plans (adaptation to modular expansion joint seals)	2, then 1 reproducible	0	"Modular Expansion Joint Seals"
Sound Barrier Wall (precast items)	10	0	Article 1077-2 & "Sound Barrier Wall"
Sound Barrier Wall Steel Fabrication Plans [5]	7	0	Article 1072-8 & "Sound Barrier Wall"
Structural Steel [4]	2, then 7	0	Article 1072-8
Temporary Detour Structures	10	2	Article 400-3 & "Construction, Maintenance and Removal of Temporary Structure at Station ____"
TFE Expansion Bearings [4]	8	0	Article 1072-8

FOOTNOTES

1. References are provided to help locate the part of the contract where the submittals are required. References in quotes refer to the provision by that name. Articles refer to the *Standard Specifications*.
2. Submittals for these items are necessary only when required by a note on plans.
3. Submittals for these items may not be required. A list of pre-approved sequences is available from the producer or the Materials & Tests Unit.
4. The fabricator may submit these items directly to the Structure Design Unit.
5. The two sets of preliminary submittals required by Article 1072-8 of the *Standard Specifications* are not required for these items.
6. Submittals for Fabrication Drawings are not required. Submittals for Catalogue Cuts of Proposed Material are required. See Section 5.A of the referenced provision.
7. Submittals are necessary only when the top slab thickness is 18" or greater.

GEOTECHNICAL SUBMITTALS

Submittal	Copies Required by Geotechnical Engineering Unit	Copies Required by Structure Design Unit	Contract Reference Requiring Submittal [1]
Drilled Pier Construction Plans [2]	1	0	Subarticle 411-3(A)
Crosshole Sonic Logging (CSL) Reports [2]	1	0	Subarticle 411-5(A)(2)
Pile Driving Equipment Data Forms [2,3]	1	0	Subarticle 450-3(D)(2)
Pile Driving Analyzer (PDA) Reports [2]	1	0	Subarticle 450-3(F)(3)
Retaining Walls [4]	8 drawings, 2 calculations	2 drawings	Applicable Provisions
Temporary Shoring [4]	5 drawings, 2 calculations	2 drawings	"Temporary Shoring" & "Temporary Soil Nail Walls"

FOOTNOTES

1. References are provided to help locate the part of the contract where the submittals are required. References in quotes refer to the provision by that name. Subarticles refer to the *Standard Specifications*.
2. Submit one hard copy of submittal to the Resident or Bridge Maintenance Engineer. Submit a second copy of submittal electronically (PDF via email) or by facsimile, US mail or other delivery service to the appropriate Geotechnical Engineering Unit regional office. Electronic submission is preferred.
3. The Pile Driving Equipment Data Form is available from: www.ncdot.org/doh/preconstruct/highway/geotech/formdet/ See second page of form for submittal instructions.
4. Electronic copy of submittal is required. See referenced provision.

CRANE SAFETY (8-15-05)

Comply with the manufacturer specifications and limitations applicable to the operation of any and all cranes and derricks. Prime contractors, sub-contractors, and fully operated rental companies shall comply with the current Occupational Safety and Health Administration regulations (OSHA).

Submit all items listed below to the Engineer prior to beginning crane operations involving critical lifts. A critical lift is defined as any lift that exceeds 75 percent of the manufacturer's crane chart capacity for the radius at which the load will be lifted or requires the use of more than one crane. Changes in personnel or equipment must be reported to the Engineer and all applicable items listed below must be updated and submitted prior to continuing with crane operations.

CRANE SAFETY SUBMITTAL LIST

A. **Competent Person:** Provide the name and qualifications of the "Competent Person" responsible for crane safety and lifting operations. The named competent person will have the responsibility and authority to stop any work activity due to safety concerns.

B. **Riggers:** Provide the qualifications and experience of the persons responsible for rigging operations. Qualifications and experience should include, but not be limited to, weight calculations, center of gravity determinations, selection and inspection of sling and rigging equipment, and safe rigging practices.

C. **Crane Inspections:** Inspection records for all cranes shall be current and readily accessible for review upon request.

D. **Certifications:** **By July 1, 2006**, crane operators performing critical lifts shall be certified by NC CCO (National Commission for the Certification of Crane Operators), or satisfactorily complete the Carolinas AGC's Professional Crane Operator's Proficiency Program. Other approved nationally accredited programs will be considered upon request. All crane operators shall also have a current CDL medical card. Submit a list of anticipated critical lifts and corresponding crane operator(s). Include current certification for the type of crane operated (small hydraulic, large hydraulic, small lattice, large lattice) and medical evaluations for each operator.

GROUT FOR STRUCTURE (9-30-11)

DESCRIPTION

This special provision addresses grout for use in pile blockouts, grout pockets, shear keys, dowel holes and recesses for structures. This provision does not apply to grout placed in post-tensioning ducts for bridge beams, girders, or decks. Mix and place grout in accordance with the manufacturer's recommendations, the applicable sections of the Standard Specifications and this provision.

MATERIAL REQUIREMENTS

Use a Department approved pre-packaged, non-shrink, non-metallic grout. Contact the Materials and Tests Unit for a list of approved pre-packaged grouts and consult the manufacturer to determine if the pre-packaged grout selected is suitable for the required application.

When using an approved pre-packaged grout, a grout mix design submittal is not required.

The grout shall be free of soluble chlorides and contain less than one percent soluble sulfate. Supply water in compliance with Article 1024-4 of the Standard Specifications.

Aggregate may be added to the mix only where recommended or permitted by the manufacturer and Engineer. The quantity and gradation of the aggregate shall be in accordance with the manufacturer's recommendations.

Admixtures, if approved by the Department, shall be used in accordance with the manufacturer's recommendations. The manufacture date shall be clearly stamped on each container. Admixtures with an expired shelf life shall not be used.

The Engineer reserves the right to reject material based on unsatisfactory performance.

Initial setting time shall not be less than 10 minutes when tested in accordance with ASTM C266.

Test the expansion and shrinkage of the grout in accordance with ASTM C1090. The grout shall expand no more than 0.2% and shall exhibit no shrinkage. Furnish a Type 4 material certification showing results of tests conducted to determine the properties listed in the Standard Specifications and to assure the material is non-shrink.

Unless required elsewhere in the contract the compressive strength at 3 days shall be at least 5000 psi. Compressive strength in the laboratory shall be determined in accordance with ASTM C109 except the test mix shall contain only water and the dry manufactured material. Compressive strength in the field will be determined by molding and testing 4" x 8" cylinders in accordance with AASHTO T22. Construction loading and traffic loading shall not be allowed until the 3 day compressive strength is achieved.

When tested in accordance with ASTM C666, Procedure A, the durability factor of the grout shall not be less than 80.

SAMPLING AND PLACEMENT

Place and maintain components in final position until grout placement is complete and accepted. Concrete surfaces to receive grout shall be free of defective concrete, laitance, oil, grease and other foreign matter. Saturate concrete surfaces with clean water and remove excess water prior to placing grout.

Do not place grout if the grout temperature is less than 50°F or more than 90°F or if the air temperature measured at the location of the grouting operation in the shade away from artificial heat is below 45°F.

Provide grout at a rate that permits proper handling, placing and finishing in accordance with the manufacturer's recommendations unless directed otherwise by the Engineer. Use grout free of any lumps and undispersed cement. Agitate grout continuously before placement.

Control grout delivery so the interval between placing batches in the same component does not exceed 20 minutes.

The Engineer will determine the locations to sample grout and the number and type of samples collected for field and laboratory testing. The compressive strength of the grout will be considered the average compressive strength test results of 3 cube or 2 cylinder specimens at 28 days.

BASIS OF PAYMENT

No separate payment will be made for "Grout for Structures". The cost of the material, equipment, labor, placement, and any incidentals necessary to complete the work shall be considered incidental to the structure item requiring grout.

FABRICATION OF STRUCTURAL STEEL (Special)

A. These specifications cover the furnishing, fabricating, preparing, assembling, welding, testing, painting and delivering of all structural steel and bridge bearings as shown on the plans.

B. The following specifications are referred to in this document. The term current shall indicate the edition listed below:

1. American Railway Engineering and Maintenance of Way Association (AREMA) Manual for Railway Engineering (Manual)
2. American Society for Testing and Materials, Annual Book of Standards - dated 1990 (A.S.T.M.)

3. American Institute of Steel Construction, Manual of Steel Construction - Ninth Edition (A.I.S.C.)
4. American Welding Society - Bridge Welding Code, D1.5, dated 1995 (A.W.S.)

C. Fabricator shall be certified for "Major Steel Bridges" Category Cbr (Old III), under the AISC Quality Certification Program.

D. Except as otherwise specified hereinafter, the current American Railway Engineering and Maintenance of Way Association (AREMA) Manual for Railway Engineering (Manual), Chapter 15 - Steel Structures, apply to all work.

E. Materials

1. Structural steel shall meet the current requirements of the Specifications of the American Society for Testing and Materials, for Structural Steel, Designation A-709, Grade 50, S84-F2 (Fracture Critical - Charpy Test Zone 2), S91 (Fine Austentic Grain Size), S93 (Limitation on Weld Repairs), except as noted on the plans or in these specifications.
2. High strength bolts shall meet the current requirements of the Specifications of the American Society for Testing and Materials for High Strength Bolts for Structural Steel Joints, Designation A-325, unless otherwise indicated.
3. Welding electrodes for arc welding shall meet the current requirements of the Specifications for mild steel arc-welding electrodes Series E70, AWS 5.1, Low Hydrogen Classification for SMAW and AWS 5.17 for SAW.

F. Shop Drawings

1. The Fabricator's attention is called to the requirements for shop drawings, Chapter 15, Article 1.1.3 Shop Drawings, AREMA Specifications.
2. The Fabricator shall furnish eight (8) complete sets of detailed shop drawings to the Department for approval prior to starting fabrication. Unchecked drawings shall not be submitted for approval.
3. The rejection of or the procedure for the correction of shop drawings will not be considered as cause for delay.
4. Approval by the Engineer of shop drawings shall not relieve the Fabricator from furnishing material of proper dimensions, quantities and quality, nor will such approval relieve the Fabricator from responsibility for errors of any sort in the shop drawings.
5. Copies of approved shop drawings shall be furnished to the Department for distribution.

G. Welding Inspection by Company:

1. The Company may arrange for additional inspection by an independent inspection firm under a separate contract. This will be in addition to the Fabricator's Quality Assurance Program.
2. The Fabricator shall notify the Company and the Company's inspector of the scheduled date for beginning fabrication and shall not begin fabrication until the Company's

inspector is present.

3. The Contractor shall retain and pay for an Independent Testing Agency to perform the following weld inspection:

   a. Inspection shall verify that welds meet the quality requirements of American Welding Society (A.W.S.) Structural Welding Code, D1.1, dated 1985.

   b. Welds shall be inspected visually and by use of nondestructive testing.

   c. All nondestructive testing shall be performed by the Independent Testing Agency.

   d. The Independent Testing Agency shall furnish copies of all nondestructive weld testing reports.

   e. Nondestructive Testing:

      All welds shall be visually inspected.

      100 percent of all flange to web fillet welds shall be magnetic particle tested and ultrasonically tested.

      100 percent of all transverse stiffener welds (bearing and intermediate) shall be magnetic particle tested.

      25 percent of other fillet welds shall be magnetic particle tested.

   f. The Contractor shall submit the name and address of the Independent Testing Agency and evidence of AWS certification of welding inspectors to the Company for approval prior to the weld inspection. The Contractor shall submit test reports.

H. Welding Inspection by the Department

The Fabricator shall notify the Department and the Department's inspector of the schedule date for beginning fabrication and shall not begin fabrication until the Department's inspector is present.

Welding Inspection shall be in accordance with the above-mentioned AREA specifications. In addition to the weld inspection required by the AREMA specifications, the following weld inspection shall be made:

The top and bottom flange-to-web welds shall be tested on both sides by the ultrasonic and magnetic particle method as follows:

(a) Along top flange within 15 feet length end of girder: 1 foot of every 3 feet of weld length.

(b) Along the top flange for remainder length of girder: 1 foot of every 8 feet of weld.

(c) The bottom flange-to-web welds: full length of each girder.

Groove welds in top and bottom flanges shall be 100% radiographic tested and 100%

ultrasonic tested. Twenty-five percent (25%) of all other groove welds shall be tested by radiographic or ultrasonic testing.

Ten percent (10%) of all fillet welds shall be tested by ultrasonic or magnetic particle testing.Any single weld having unacceptable deficiencies shall be 100% tested. If more than 10% of the tested groove or fillet welds have unacceptable deficiencies, then all groove or fillet welds, whichever is deficient, shall be 100% tested.

Magnetic particle, radiographic, and ultrasonic procedure, technique, and standard of acceptance shall be in accordance with Section 6 of the current AWS Structural Welding Code.

The Contractor shall require the Fabricator to make provision for convenient access to the joints to be inspected and cooperate with the Inspector in doing the required work. The inspection equipment and supplies will be furnished by the Inspector and payment for the work will be handled between the Department of Transportation and the Inspector except in the event corrections are necessary as the result of such inspection, the cost of any additional inspection of the joints must be borne by the Contractor, and he will be required to pay the Inspector directly for this portion of the work. Except for the cost of the first inspection as specified above, the entire cost of the first inspection as specified above, the entire cost of any nature resulting from the required magnetic particle, radiographic or ultrasonic inspection shall be included in the lump sum contract price for structural steel.

I. Paint

All steel preparation and shop painting shall be in accordance with the Special Provision for PAINTING OF STRUCTURAL STEEL.

J. Measurement and Payment

Payment will be made at the contract lump sum price for the bid item "STRUCTURAL STEEL " and shall constitute full payment for all costs of plant, superintendence, labor, material, and equipment necessary to furnish, fabricate, shop paint, shop assemble and deliver, all the structural steel required for the project in accordance with the Plans and Specifications, including furnishing the fixed bearing assemblies and anchor bolts.

PROTECTION OF PAINTED STEEL (SPECIAL)

The painted structural steel shall be protected during concreting operations. Any concrete that gets on the painted steel is to be removed as soon as possible by a method approved by the Engineer to restore the surface to the specified condition.

Project Special Provisions

Norfolk Southern Specification - Painting Of Structural Steel (Special)
Dated : February 8, 2002

I. General

A. Plans and Specifications

1. This work consists of furnishing all labor, material, plant and equipment, and performing all operations in connection with Shop Painting (prime coat, wash coat, and Finish coat applied in the fabricators plant or unless otherwise specified by the Railway). All painting shall be in accordance with AREMA Specifications, Chapter 15 - Section 3.4, and recommendations of the Society of Protective Coatings Specifications with the following specific requirements.
2. The paint thickness will be measured according to "SSPC-PA2" Method for Measurement of Dry Paint Thickness with Magnetic Gages.

B. Surface Preparation

1. The surface preparation shall be in accordance with Steel Structures Painting Council Specifications SP 10 (NEAR WHITE BLAST) latest revision and Visual Standard NACE No. 2. Average surface profile to be 2 mils.
2. Application - The paint shall be applied in accordance with SSPC Specifications for Paint Application - PA1.
3. The Prime Coat shall be applied in the shop promptly after blast cleaning, but in no case shall the prime coat be applied more than 8 hours after blast cleaning or after visible or detrimental rusting occurs.
4. Steel shall be cleaned by washing, or other mechanical means to remove all residue (loose zinc dust and foreign matter) prior to applying Wash and Finish Coat.
5. Surfaces damaged during shipment and handling shall be repaired using the same paint system as applied in the shop except that the Prime coat shall be repaired using an ***Organic Zinc Primer*** when the Primer Coat is repaired in the field.

C. Welded Areas And Faying (Contact) Surfaces

1. No paint shall be applied to areas to be welded in the field. No Vinyl paint (wash or Finish coat) shall be applied to any Faying surfaces.

II. Painting Requirements

A. Paint System

1. The fabricator will be given the option of using one of the following paint systems ***(Prime Coat, Intermediate and Finish Coats shall be applied in the fabricator's plant unless otherwise specified by the Railway)***. If the Intermediate Coat and Top Coat are applied in the field, the steel shall be solvent wiped to removed all grease and oil and a ***"High Pressure Power Washing" with clean water (3500 p.s.i. minimum)*** shall be used to clean all mud and dirt off prior to applying the touch-up Primer or Intermediate and Finish Coats. ***The fabricator shall supply sufficient***

quantities of touch-up Organic Zinc-Rich Primer, Intermediate Coat, Finish Coat and Thinner. The Chief Engineer Bridges and Structures is to be notified of the fabricator's choice. Priming of the contact surfaces with ***Inorganic Zinc-Rich primer*** is required.

2. If approved, or further specified by the Railway, the Wash Coat and Finish Coat shall be applied in the shop.
3. DFT denotes ***Dry Film Thickness*** in all system information listings hereinafter.
4. Provide a STRIPE COAT in accordance with NCDOT Standards Section 442-7, system 3.

B. System #1 (Elite)

Prime Coat: Elite 1312 Inorganic Zinc Rich Primer applied at 4.0 - 5.0 mils DFT.
Intermediate Coat - Elite 156 Exterior Acrylic Latex (White) applied at 3.0 - 4.0 mils DFT.

Finish Coat - Elite 156 Exterior Acrylic Latex (gray) applied at 3.0 - 4.0 mils DFT.

Touch Up Primer - Elite 305 Organic Zinc-Rich Primer applied at 4.0 - 5.0 mils DFT.

Suggested Supplier: Elite Coatings Company, Inc.
P. O. Box 130
Gordon, GA 31031
Telephone: 912/628-2111

C. System #2 (Devoe)

Prime Coat: Catha-Coat 301 Inorganic Zinc-Rich Primer applied at 4.0 - 5.0 mils DFT.
Intermediate Coat: DEVRAN 646 Water Based Epoxy primer (White) applied at 3.0 - 4.0 mils DFT.

Prime Coat: DEVFLEX 604-S-9903 Water Based Gloss Enamel (Gray) applied at 3.0 - 4.0 mils DFT.

Touch Up Primer - Cata-Coat 303H Organic Zinc-Rich Epoxy applied at 4.0 - 5.0 mils DFT.

Suggested Supplier: Devoe Coatings Company
320 Westbrook Drive
Butler, PA 16001
Telephone: 724/283-1471
Attn. : Gary M. Mato

D. System #3 (Sherwin-Williams)

Prime Coat: ZINC CLAD II HS - (B69VZ1 B69VZ3 B69D11) Inorganic Zinc-Rich Primer applied at 4.0 - 5.0 mils DFT.
Intermediate Coat - B66 Series DTM ACRYLIC GLOSS (White) applied at 3.0 - 4.0 mils DFT.

Finish Coat - B66 Series DTM ACRYLIC GLOSS (Gray) applied at 3.0 - 4.0 mils DFT.

Touch Up Primer - ZINC-CLAD IV - (B69 A8/B69 V8) applied at 4.0 - 5.0 mils DFT.

Suggested Suplier: The Sherwin-Williams Company
765 North Avenue NE
Atlanta, GA 30306
Telephone: 404/873-6723

E. System #4 (Ameron)

Prime Coat: Amercoat 21-5 Inorganic Zinc-Rich primer applied at 4.0 - 5.0 mils DFT.
Intermediate Coat - Amercoat 148 Waterborne Acrylic primer applied at 3.0 - 4.0 mils DFT.

Finish Coat - Amercoat 220 Waterborne Acrylic (Gray) applied at 3.0 - 4.0 mils DFT.

Touch Up Primer - Amercoat 68HS Zinc-Rich Primer applied at 4.0 - 5.0 mils DFT

Suggested Supplier: Ameron Protective Coatings Division
11605 Vimy Ridge Road
Little Rock, AK 72209
Telephone: 800/283-6627

F. Post-Painting Requirements

1. Steel shall be cleaned by washing, or other mechanical means to remove all residue (loose zinc dust and foreign matter) prior to applying Wash and Top Coat. An ***"M. E. K. Rub Test"*** shall be used to assure proper cure of the inorganic zinc primer prior to applying the next coat.
2. ***The Intermediate Coat may have to be thinned to prevent gassing.***

III. Painting Materials Requirements

A. Packaging and Shipping

1. All paint shall be received at the point of use in original containers and carefully stored. All paint to be used shall be freshly mixed and shall be ordered only a sufficient length of time in advance of its use to insure an adequate supply being on hand at all times so as not to delay the work.

2. Paint shipped to the job shall arrive in sealed containers clearly marked with the type of paint and specifications controlling its manufacture.
3. There shall be no modification of the paint except upon, and in accordance with, express written stipulation by an authorized representative of the paint manufacturer and with specific approval of the Engineer.

B. Storage

Paint in storage at the shop or in the field shall have the position of the containers reversed at least once a week to prevent settlement and separation of the pigment from the vehicle. There shall be suitable devices maintained at the point of storage and used for agitation and thorough mixing of the paint prior to its use on this work.

C. Sample Panel

If directed by the Engineer, a sample panel shall be made up. The panel shall be used as a basis of comparison of the work on this contract. The panel shall be of size designated by the Engineer and shall be prepared and painted in all respects in the same manner as the work will be done.

IV. Workmanship

A. Weather Conditions

Paint shall not be applied when the temperature of the air is less than 40 degrees F., when the surface of the metal is not dry, the relative humidity is above 85%, or when, in the opinion of the Engineer, conditions are otherwise unsatisfactory for such work. Paint shall not be applied upon damp, or frosted surfaces. Material painted under cover in damp or cold weather shall remain under cover until dry or until weather conditions permit its exposure in the open. Painting shall not be done when the metal is hot enough to cause the paint to blister and produce a porous paint film.

B. Application

1. Paint shall be applied in accordance with SSPC Specifications for Paint Application - PA1 and in accordance with manufacturer's recommendation.
2. All blast cleaned steel surfaces shall be primed before completion of the work day.
3. Steel shall be cleaned by washing, brushing or other mechanical means of all residue (loose foreign matter) prior to applying the finish coat.

C. Removal Of Unsatisfactory Paint

If the Prime Coat "mud- cracks", the Finish Coat wrinkles or shows evidence of having been applied under unfavorable conditions or if the workmanship is poor, the Engineer may order it removed and the metal thoroughly cleaned and repainted. Any "Blushing" of the Finish Coat shall be corrected by solvent wiping and/or re-coating before final acceptance by the Company.

D. Thinning

No thinner shall be used if the paint can be applied in a neat workmanlike manner without thinning. If the paint is too thick to spray, only the manufacturer's specified thinner (in hot

weather vinyl paint shall be thinned with M.I.B.K. to reduce the chances of "Blushing" occurring) may be added to the paint up to 25% by volume or as otherwise specified by the manufacturer. Thinning shall not relieve the contractor from applying the specified coating D.F.T.

E. Paint Touch-Up

After erection, all damaged areas shall be cleaned of mud and dirt by ***High Pressure Power Washing with clean water (3500 p.s.i. minimum)***; grease, and oil by ***solvent wiping***; and rusted areas shall be cleaned by ***sand blasting*** or ***power tool cleaning*** with non-woven abrasives prior to touch-up or Finish coating. The paint used for touch-up shall be the same system used in the shop. The Contractor and/or Fabricator shall be responsible for cleaning all damaged surfaces and applying all field touch-up coatings in accordance with all manufacturer's recommendations. The Zinc Primer shall be touched up with only ***Organic Zinc Primer*** when applied in the field.

F. Warranty

The Fabricator and or Contractor will be required to guarantee his work against defective workmanship or the use of defective materials for a period of one (1) year from the completion of the contract.

G. Handling Shop Primed Steel

Only Nylon web slings or padded lifting points shall be used to move shop primed steel to prevent damage to the coating.

V. Environmental Protection Requirements

A. Air Quality Requirements

Abrasive blasting operations shall be conducted in full compliance with all current ***National primary and secondary ambient air quality standards 40 CFR 50.*** (for Particulate matter - 40 CFR 50.6; Lead - 40 CFR 50.12; and nuisance dust). Abrasive blasting operations shall also be compliant with any and all local and state air quality requirements.

VI. Environmental Protection Statement

"All collection, containment, disposal and transportation for disposal must be compliant with all applicable State, Federal and Local air pollution, water pollution, solid waste and hazardous waste regulations, ordinances or statutes."

VII. Measurement and Payment

All work covered by this provision, except for shop painting, will be paid for at the contract lump sum price for this item. Payment will be made under:

"Structural Steel (Approximately_____ pounds)"
Lump Sum (full compensation for the work of shop painting)

Painting Structural Steel Lump Sum
(full compensation for all other work of painting)

Project Special Provisions

Norfolk Southern Specification

STRUCTURAL STEEL

I. STRUCTURAL STEEL

A. Scope

These specifications shall cover the furnishing, fabrication, preparation, assembly, welding, painting, and erection of all structural steel shown on the plans.

B. General Specifications

Except as otherwise specified hereinafter, the current AREMA Specification, Chapter 15, Steel Structures, apply to all work.

C. Structural Steel

1. Fracture Critical Members

a. All fracture critical members are identified on the plans.

b. All fracture critical members will be fabricated in accordance with the Fracture Control Plan stated in the AREMA Specifications, Chapter 15, Section 1.14.

c. Fabricator shall be certified under the AISC Quality Certification Program as follows:

Welded Plate Girders, Category III
Rolled Beam Bridges, Category I.

d. Structural Steel shall meet the current requirements of the A.S.T.M. Specifications for Structural Steel, Designation A-709, Grade 50, (345) S84-F2, S91, S93.

S84-F2	(Fracture Critical - Charpy Test Zone 2)
S91	(Fine Austenitic Grain Size)
S93	(Limitation on Weld Repairs)

Except as noted in the AREMA Fracture Control Plans.

2. Non-Fracture Critical Members

a. All primary members or components requiring improved notch toughness are identified on the plans.

b. Fabricator shall be certified under the AISC Quality Cerf\tification Program as follows:

Welded Plate Girders	Category III
Rolled Beam Bridges	Category I

c. Structural steel shapes and plates used as primary members or components shall meet the current requirements of the A.S.T.M. Specifications for Structural Steel, Designation A-709, Grade 50, (345) S83-T2, S91.

S83-T2	(Non-Fracture Critical - Charpy Test Zone 2)
S91	(Fine Austenitic Grain Size)

3. Other Structural Steel

a. It is preferred that the Fabricator be certified under the AISC Quality Certification Program, Category I.

b. All structural steel shall meet the current requirements of the Specification for A.S.T.M. A-709, Grade 50,unless specified otherwise in these specifications or on the plans.

D. Other Materials

1. High strength bolts shall meet the current requirements of the A.S.T.M. Specifications for High Strength Bolts for Structural Steel Joints, Designation A 325-97.

2. Anchor bolts shall be threaded rods with heavy hex nut meeting the current requirements of ASTM specification for fasteners, Designation A-307-97.

3. Welding electrodes for arc welding shall meet the current requirements of the Specifications for mild steel arc-welding electrodes Series E70, AWS 5.1, Low Hydrogen Classification for SMAW and AWS 5.17 for SAW.

4. Preformed fabric bearing pads shall be Shock Pad Style No. 15175 as manufactured by Alert Manufacturing and Supply Company, Chicago, Illinois, or FABREEKA Pads as manufactured by Fabreeka Products Company, 1190 Adams Street, Boston, Massachusetts, or SORBTEX Pads as manufactured by Voss Engineering, Inc., Chicago, Illinois, or approved equal.

E. Welding Processes

Only submerged arc welding (SAW) or shielded metal arc welding (SMAW) may be used. No other process will be allowed.

F. Bolted Connections

Permanent bolted connections using High Strength Bolts shall be installed and tightened using the Turn-of-the-Nut Method.

G. Paint

All steel preparation and painting shall be in accordance with Norfolk Southern Corporation Paint Specifications.

H. Shop Drawings

1. The Contractor's attention is called to the requirements for shop drawings, Chapter 15, Article 1.1.2 Shop Drawings, AREMA Specifications.

2. The Contractor shall furnish three (3) complete sets of detailed shop drawings to the Company for approval prior to starting fabrication. Unchecked drawings shall not be submitted for approval. After approval of shop drawings, the Contractor shall supply the Company with one set of reproducibles of the approved drawings.

3. The rejection of or the procedure for the correction of shop drawings will not be considered as cause for delay.

4. Approval by the Engineer of the shop drawings shall not relieve the Contractor from furnishing material of proper dimensions, quantity, and quality, nor will such approval relieve the Contractor from the responsibility for errors of any sort in the shop drawings.

5. Original drawings or photographic reproducibles on mylar, or equivalent film, shall be furnished at the completion of the Contract in accordance with Chapter 15, Article 1.1.3, AREMA specifications. Reproducibles made by the diazo process are not acceptable.

The plans shall be sent to:

Chief Engineer - Bridges & Structures
Norfolk Southern Corporation
99 Spring Street, SW
Atlanta, GA 30303

I. SHOP INSPECTION & TESTING

1. The Company may arrange for inspection by an independent inspection firm under a separate contract. This inspection will be in addition to the Fabricator's Quality Control Program.

2. The Fabricator shall notify the Company and it's inspector of the scheduled date for beginning fabrication and shall not begin fabrication until the Company's Inspector is present.

3. The Fabricator shall furnish copies of certified mill inspection reports to the Company for all structural steel requiring improved notch toughness.

4. The Fabricator shall meet the requirements of the AREMA Fracture Control Plan described in Chapter 15, Section 1.14 for all members and components designated as fracture critical.

5. Welding inspection shall verify that all welds and welding procedures meet the requirements of the American Welding Society (A.W.S.) Bridge Welding Code, D1.5, dated 2002.

6. All welds shall be inspected visually and by use of nondestructive testing. All nondestructive testing shall be performed by the Fabricator and witnessed by the Company's Inspector.

7. Witnessing of weld inspection shall be done in a timely manner without disruption of normal shop operations. Copies of all weld inspections and nondestructive testing reports shall be furnished to the Company.

8. The Fabricator shall perform the following weld inspection and testing:

   a. All transverse tension groove welds in FCM members, when allowed by the Engineer, shall be RT <u>and</u> UT tested 100%. In non-FCM components of FCM's all transverse groove welds shall be RT <u>or</u> UT tested 100%.

   b. All flange to web welds shall be tested on both sides as follows:

      1. Top flange to web welds will be UT tested 100% over 10% of the length from each end and the remaining length of weld will be UT tested 10%.

      2. Bottom flange to web welds will be UT tested 100% .

c. All flange to web fillet welds, when allowed by the Engineer, are to be magnetic particle tested 100%.

d. Ten percent (10%) of all welds not mentioned above shall be magnetic particle tested.

PROJECT SPECIAL PROVISION

(10-18-95) (Rev. 10-15-13) Z-1

PERMITS

The Contractor's attention is directed to the following permits, which have been issued to the Department of Transportation by the authority granting the permit.

PERMIT	AUTHORITY GRANTING THE PERMIT
Dredge and Fill and/or Work in Navigable Waters (404)	U. S. Army Corps of Engineers
Water Quality (401)	Division of Environmental Management, DENR State of North Carolina

The Contractor shall comply with all applicable permit conditions during construction of this project. Those conditions marked by * are the responsibility of the Department and the Contractor has no responsibility in accomplishing those conditions.

Agents of the permitting authority will periodically inspect the project for adherence to the permits.

The Contractor's attention is also directed to Articles 107-10 and 107-13 of the *2012 Standard Specifications* and the following:

Should the Contractor propose to utilize construction methods (such as temporary structures or fill in waters and/or wetlands for haul roads, work platforms, cofferdams, etc.) not specifically identified in the permit (individual, general, or nationwide) authorizing the project it shall be the Contractor's responsibility to coordinate with the Engineer to determine what, if any, additional permit action is required. The Contractor shall also be responsible for initiating the request for the authorization of such construction method by the permitting agency. The request shall be submitted through the Engineer. The Contractor shall not utilize the construction method until it is approved by the permitting agency. The request normally takes approximately 60 days to process; however, no extensions of time or additional compensation will be granted for delays resulting from the Contractor's request for approval of construction methods not specifically identified in the permit.

Where construction moratoriums are contained in a permit condition which restricts the Contractor's activities to certain times of the year, those moratoriums will apply only to the portions of the work taking place in the waters or wetlands provided that activities outside those areas is done in such a manner as to not affect the waters or wetlands.

R-2

U.S. ARMY CORPS OF ENGINEERS
WILMINGTON DISTRICT

Action ID. 201201988 County: Rowan USGS Quad: Salisbury

GENERAL PERMIT (REGIONAL AND NATIONWIDE) VERIFICATION

Property Owner / Authorized Agent: Marc Hamel / NC DOT Rail Division
Address: 1553 Mail Service Center
Raleigh, North Carolina 27699-1553

COPY

Telephone No.: 919 707-4705
Size and location of property (water body, road name/number, town, etc.): Reid Station to North Kannapolis Station Norfolk Southern rail road adjacent to Grant Creek and Cold Water Creek south of Salisbury, Rowan County, North Carolina. TIP P-5206 BCDF. Grant Creek and Cold Water Creek are tributaries of the Yadkin River.

Description of projects area and activity: Mechanized landclearing, excavation and the discharge of fill material associated with the construction for existing rail road improvements. The proposed project includes 5 sites of culvert fill resulting in 405 linear feet of permanent stream channel impact and 1 site of jurisdictional wetland fill resulting in 0.05 acre of impacts to the jurisdictional waters of Grant and Cold Water Creek. (See attached Compensatory Mitigation Responsibility Transfer Forms[2] for HUC Basin 03040103 & 03040105 for project mitigation requirements.)

Applicable Law: ☒ Section 404 (Clean Water Act, 33 USC 1344)
☐ Section 10 (Rivers and Harbors Act, 33 USC 403)
Authorization: Regional General Permit Number: _____
Nationwide Permit Number: NW 14 & 33

Your work is authorized by the above referenced permit provided it is accomplished in strict accordance with the attached conditions and your submitted plans. Any violation of the attached conditions or deviation from your submitted plans may subject the permittee to a stop work order, a restoration order and/or appropriate legal action.

This verification will remain valid until the expiration date identified below unless the nationwide authorization is modified, suspended or revoked. If, prior to the expiration date identified below, the nationwide permit authorization is reissued and/or modified, this verification will remain valid until the expiration date identified below, provided it complies with all requirements of the modified nationwide permit. If the nationwide permit authorization expires or is suspended, revoked, or is modified, such that the activity would no longer comply with the terms and conditions of the nationwide permit, activities which have commenced (i.e., are under construction) or are under contract to commence in reliance upon the nationwide permit, will remain authorized provided the activity is completed within twelve months of the date of the nationwide permit's expiration, modification or revocation, unless discretionary authority has been exercised on a case-by-case basis to modify, suspend or revoke the authorization.

Activities subject to Section 404 (as indicated above) may also require an individual Section 401 Water Quality Certification. You should contact the NC Division of Water Quality (telephone (919) 733-1786) to determine Section 401 requirements.

For activities occurring within the twenty coastal counties subject to regulation under the Coastal Area Management Act (CAMA), prior to beginning work you must contact the N.C. Division of Coastal Management .

This Department of the Army verification does not relieve the permittee of the responsibility to obtain any other required Federal, State or local approvals/permits.

If there are any questions regarding this verification, any of the conditions of the Permit, or the Corps of Engineers regulatory program, please contact John Thomas @ 919 554-4884 ext. 25.

Corps Regulatory Official _____ Date: 03/27/2013

Expiration Date of Verification: 03/18/2017

R-3

The Wilmington District is committed to providing the highest level of support to the public. To help us ensure we continue to do so, please complete the attached customer Satisfaction Survey or visit http://www.saw.usace.army.mil/WETLANDS/index.html to complete the survey online.

Determination of Jurisdiction:

☐ Based on preliminary information, there appear to be waters of the US including wetlands within the above described project area. This preliminary determination is not an appealable action under the Regulatory Program Administrative Appeal Process (Reference 33 CFR Part 331).

☐ There are Navigable Waters of the United States within the above described project area subject to the permit requirements of Section 10 of the Rivers and Harbors Act and Section 404 of the Clean Water Act. Unless there is a change in the law or our published regulations, this determination may be relied upon for a period not to exceed five years from the date of this notification.

☒ There are waters of the US and/or wetlands within the above described project area subject to the permit requirements of Section 404 of the Clean Water Act (CWA)(33 USC § 1344). Unless there is a change in the law or our published regulations, this determination may be relied upon for a period not to exceed five years from the date of this notification.

☐ The jurisdictional areas within the above described project area have been identified under a previous action. Please reference jurisdictional determination issued _____. Action ID _____

Basis of Jurisdictional Determination: **Property has tributaries which flows to the Yadkin River and the Atlantic Ocean.**

Appeals Information (This information applies only to approved jurisdictional determinations.)

Attached to this verification is an approved jurisdictional determination. If you are not in agreement with that approved jurisdictional determination, you can make an administrative appeal under 33 CFR 331. Enclosed you will find a Notification of Appeal Process (NAP) fact sheet and request for appeal (RFA) form. If you request to appeal this determination you must submit a completed RFA form to the following address:

District Engineer, Wilmington Regulatory Division
Attn:Jean Gibby, Project Manager,
Raleigh Regulatory Field Office
3331 Heritage Trade Drive, Suite 105
Wake Forest, North Carolina 27587

In order for an RFA to be accepted by the Corps, the Corps must determine that it is complete, that it meets the criteria for appeal under 33 CFR part 331.5, and that it has been received by the District Office within 60 days of the date of the NAP. Should you decide to submit an RFA form, it must be received at the above address by **May 28, 2013**.

It is not necessary to submit an RFA form to the District Office if you do not object to the determination in this correspondence.

Corps Regulatory Official: _____
Date **03/27/2013**
SURVEY PLATS, FIELD SKETCH, WETLAND DELINEATION FORMS, PROJECT PLANS, ETC., MUST BE ATTACHED TO THE FILE COPY OF THIS FORM, IF REQUIRED OR AVAILABLE.

Copy Furnished:
Scott Davis, Axiom Environmental, Inc., 218 Snow Avenue, Raleigh, NC 27603

R-4

NATIONWIDE PERMIT 14
DEPARTMENT OF THE ARMY
CORPS OF ENGINEERS
FINAL NOTICE OF ISSUANCE AND MODIFICATION OF NATIONWIDE PERMITS
FEDERAL REGISTER
AUTHORIZED MARCH 19, 2012

Linear Transportation Projects. Activities required for the construction, expansion, modification, or improvement of linear transportation projects (e.g., roads, highways, railways, trails, airport runways, and taxiways) in waters of the United States. For linear transportation projects in non-tidal waters, the discharge cannot cause the loss of greater than 1/2-acre of waters of the United States. For linear transportation projects in tidal waters, the discharge cannot cause the loss of greater than 1/3-acre of waters of the United States. Any stream channel modification, including bank stabilization, is limited to the minimum necessary to construct or protect the linear transportation project; such modifications must be in the immediate vicinity of the project.

This NWP also authorizes temporary structures, fills, and work necessary to construct the linear transportation project. Appropriate measures must be taken to maintain normal downstream flows and minimize flooding to the maximum extent practicable, when temporary structures, work, and discharges, including cofferdams, are necessary for construction activities, access fills, or dewatering of construction sites. Temporary fills must consist of materials, and be placed in a manner, that will not be eroded by expected high flows. Temporary fills must be removed in their entirety and the affected areas returned to pre-construction elevations. The areas affected by temporary fills must be revegetated, as appropriate.

This NWP cannot be used to authorize non-linear features commonly associated with transportation projects, such as vehicle maintenance or storage buildings, parking lots, train stations, or aircraft hangars.

* Notification: The permittee must submit a pre-construction notification to the district engineer prior to commencing the activity if: (1) the loss of waters of the United States exceeds 1/10-acre; or (2) there is a discharge in a special aquatic site, including wetlands. (See general condition 31.) (Sections 10 and 404)

Note: Some discharges for the construction of farm roads or forest roads, or temporary roads for moving mining equipment, may qualify for an exemption under Section 404(f) of the Clean Water Act (see 33 CFR 323.4).

NATIONWIDE PERMIT 33
DEPARTMENT OF THE ARMY
CORPS OF ENGINEERS
FINAL NOTICE OF ISSUANCE AND MODIFICATION OF NATIONWIDE PERMITS
FEDERAL REGISTER
AUTHORIZED MARCH 19, 2012

Temporary Construction, Access, and Dewatering. Temporary structures, work, and discharges, including cofferdams, necessary for construction activities or access fills or dewatering of construction sites, provided that the associated primary activity is authorized by the Corps of Engineers or the U.S. Coast Guard. This NWP also authorizes temporary structures, work, and discharges, including cofferdams, necessary for construction activities not otherwise subject to the Corps or U.S. Coast Guard permit requirements. Appropriate measures must be taken to maintain near normal downstream flows and to minimize flooding. Fill must consist of materials, and be placed in a manner, that will not be eroded by expected high flows. The use of dredged material may be allowed if the district engineer determines that it will not cause more than minimal adverse effects on aquatic resources. Following completion of construction, temporary fill must be entirely removed to an area that has no waters of the United States, dredged material must be returned to its original location, and the affected areas must be restored to pre-construction elevations. The affected areas must also be revegetated, as appropriate. This permit does not authorize the use of cofferdams to dewater wetlands or other aquatic areas to change their use. Structures left in place after construction is completed require a separate section 10 permit if located in navigable waters of the United States. (See 33 CFR part 322.)

* Notification: The permittee must submit a pre-construction notification to the district engineer prior to commencing the activity (see general condition 31). The pre-construction notification must include a restoration plan showing how all temporary fills and structures will be removed and the area restored to pre-project conditions. (Sections 10 and 404)

NATIONWIDE PERMIT CONDITIONS

The following General Conditions must be followed in order for any authorization by a NWP to be valid:

1. Navigation. (a) No activity may cause more than a minimal adverse effect on navigation.

(b) Any safety lights and signals prescribed by the U.S. Coast Guard, through regulations or otherwise, must be installed and maintained at the permittee's expense on authorized facilities in navigable waters of the United States.

(c) The permittee understands and agrees that, if future operations by the United States require the removal, relocation, or other alteration, of the structure or work herein authorized, or if, in the opinion of the Secretary of the Army or his authorized representative, said structure or work shall cause unreasonable obstruction to the free navigation of the navigable waters, the permittee will be required, upon due notice from the Corps of Engineers, to remove, relocate, or alter the structural work or obstructions caused thereby, without expense to the United States. No claim shall be made against the United States on account of any such removal or alteration.

2. Aquatic Life Movements. No activity may substantially disrupt the necessary life cycle movements of those species of aquatic life indigenous to the waterbody, including those species that normally migrate through the area, unless the activity's primary purpose is to impound water. All permanent and temporary crossings of waterbodies shall be suitably culverted, bridged, or otherwise designed and constructed to maintain low flows to sustain the movement of those aquatic species.

3. Spawning Areas. Activities in spawning areas during spawning seasons must be avoided to the maximum extent practicable. Activities that result in the physical destruction (e.g., through excavation, fill, or downstream smothering by substantial turbidity) of an important spawning area are not authorized.

4. Migratory Bird Breeding Areas. Activities in waters of the United States that serve as breeding areas for migratory birds must be avoided to the maximum extent practicable.

5. Shellfish Beds. No activity may occur in areas of concentrated shellfish populations, unless the activity is directly related to a shellfish harvesting activity authorized by NWPs 4 and 48, or is a shellfish seeding or habitat restoration activity authorized by NWP 27.

6. Suitable Material. No activity may use unsuitable material (e.g., trash, debris, car bodies, asphalt, etc.). Material used for construction or discharged must be free from toxic pollutants in toxic amounts (see Section 307 of the Clean Water Act).

7. Water Supply Intakes. No activity may occur in the proximity of a public water supply intake, except where the activity is for the repair or improvement of public water supply intake structures or adjacent bank stabilization.

8. Adverse Effects From Impoundments. If the activity creates an impoundment of water, adverse effects to the aquatic system due to accelerating the passage of water, and/or restricting its flow must be minimized to the maximum extent practicable.

9. Management of Water Flows. To the maximum extent practicable, the pre-construction course, condition, capacity, and location of open waters must be maintained for each activity, including stream channelization and storm water management activities, except as provided below. The activity must be constructed to withstand expected high flows. The activity must not restrict or impede the passage of normal or high flows, unless the primary purpose of the activity is to impound water or manage high flows. The activity may alter the pre-construction course, condition, capacity, and location of open waters if it benefits the aquatic environment (e.g., stream restoration or relocation activities).

10. Fills Within 100-Year Floodplains. The activity must comply with applicable FEMA-approved state or local floodplain management requirements.

11. Equipment. Heavy equipment working in wetlands or mudflats must be placed on mats, or other measures must be taken to minimize soil disturbance.

12. Soil Erosion and Sediment Controls. Appropriate soil erosion and sediment controls must be used and maintained in effective operating condition during construction, and all exposed soil and other fills, as well as any work below the ordinary high water mark or high tide line, must be permanently stabilized at the earliest practicable date. Permittees are encouraged to perform work within waters of the United States during periods of low-flow or no-flow.

13. Removal of Temporary Fills. Temporary fills must be removed in their entirety and the affected areas returned to pre-construction elevations. The affected areas must be revegetated, as appropriate.

14. Proper Maintenance. Any authorized structure or fill shall be properly maintained, including maintenance to ensure public safety and compliance with applicable NWP general conditions, as well as any activity-specific conditions added by the district engineer to an NWP authorization.

15. Single and Complete Project. The activity must be a single and complete project. The same NWP cannot be used more than once for the same single and complete project.

16. Wild and Scenic Rivers. No activity may occur in a component of the National Wild and Scenic River System, or in a river officially designated by Congress as a "study river" for possible inclusion in the system while the river is in an official study status, unless the appropriate Federal agency with direct management responsibility for such river, has determined in writing that the proposed activity will not adversely affect the Wild and Scenic River designation or study status. Information on Wild and Scenic Rivers may be obtained from the appropriate Federal land management agency responsible for the designated Wild and Scenic River or study river (e.g., National Park Service, U.S. Forest Service, Bureau of Land Management, U.S. Fish and Wildlife Service).

17. Tribal Rights. No activity or its operation may impair reserved tribal rights, including, but not limited to, reserved water rights and treaty fishing and hunting rights.

18. Endangered Species. (a) No activity is authorized under any NWP which is likely to directly or indirectly jeopardize the continued existence of a threatened or endangered species or a species proposed for such designation, as identified under the Federal Endangered Species Act (ESA), or which will directly or indirectly destroy or adversely modify the critical habitat of such species. No activity is authorized under any NWP which "may affect" a listed species or critical habitat, unless Section 7 consultation addressing the effects of the proposed activity has been completed.

(b) Federal agencies should follow their own procedures for complying with the requirements of the ESA. Federal permittees must provide the district engineer with the appropriate documentation to demonstrate compliance with those requirements. The district engineer will review the documentation and determine whether it is sufficient to address ESA compliance for the NWP activity, or whether additional ESA consultation is necessary.

* (c) Non-federal permittees must submit a pre-construction notification to the district engineer if any listed species or designated critical habitat might be affected or is in the vicinity of the project, or if the project is located in designated critical habitat, and shall not begin work on the activity until notified by the district engineer that the requirements of the ESA have been satisfied and that the activity is authorized. For activities that might affect Federally-listed endangered or threatened species or designated critical habitat, the pre-construction notification must include the name(s) of the endangered or threatened species that might be affected by the proposed work or that utilize the designated critical habitat that might be affected by the proposed work. The district engineer will determine whether the proposed activity "may affect" or will have "no effect" to listed species and designated critical habitat and will notify the non-Federal applicant of the Corps' determination within 45 days of receipt of a complete pre-construction notification. In cases where the non-Federal applicant has identified listed species or critical habitat that might be affected or is in the vicinity of the project, and has so notified the Corps, the applicant shall not begin work until the Corps has provided notification the proposed activities will have "no effect" on listed species or critical habitat, or until Section 7 consultation has been completed. If the non-Federal applicant has not heard back from the Corps within 45 days, the applicant must still wait for notification from the Corps.

(d) As a result of formal or informal consultation with the FWS or NMFS the district engineer may add species-specific regional endangered species conditions to the NWPs.

(e) Authorization of an activity by a NWP does not authorize the "take" of a threatened or endangered species as defined under the ESA. In the absence of separate authorization (e.g., an ESA Section 10 Permit, a Biological Opinion with "incidental take" provisions, etc.) from the U.S. FWS or the NMFS, The Endangered Species Act prohibits any person subject to the jurisdiction of the United States to take a listed species, where "take" means to harass, harm, pursue, hunt, shoot, wound, kill, trap, capture, or collect, or to attempt to engage in any such conduct. The word "harm" in the definition of "take" means an act which actually kills or injures wildlife. Such an act may include significant habitat modification or degradation where it actually kills or injures wildlife by significantly impairing essential behavioral patterns, including breeding, feeding or sheltering.

(f) Information on the location of threatened and endangered species and their critical habitat can be obtained directly from the offices of the U.S. FWS and NMFS or their world wide web pages at http://www.fws.gov/ or http://www.fws.gov/ipac and http://www.noaa.gov/fisheries.html respectively.

19. Migratory Birds and Bald and Golden Eagles. The permittee is responsible for obtaining any "take" permits required under the U.S. Fish and Wildlife Service's regulations governing compliance with the Migratory Bird Treaty Act or the Bald and Golden Eagle Protection Act. The permittee should contact the appropriate local office of the U.S. Fish and Wildlife Service to determine if such "take" permits are required for a particular activity.

20. Historic Properties. (a) In cases where the district engineer determines that the activity may affect properties listed, or eligible for listing, in the National Register of Historic Places, the activity is not authorized, until the requirements of Section 106 of the National Historic Preservation Act (NHPA) have been satisfied.

(b) Federal permittees should follow their own procedures for complying with the requirements of Section 106 of the National Historic Preservation Act. Federal permittees must provide the district engineer with the appropriate documentation to demonstrate compliance with those requirements. The district engineer will review the documentation and determine whether it is sufficient to address section 106 compliance for the NWP activity, or whether additional section 106 consultation is necessary.

* (c) Non-federal permittees must submit a pre-construction notification to the district engineer if the authorized activity may have the potential to cause effects to any historic properties listed on, determined to be eligible for listing on, or potentially eligible for listing on the National Register of Historic Places, including previously unidentified properties. For such activities, the pre-construction notification must state which historic properties may be affected by the proposed work or include a vicinity map indicating the location of the historic properties or the potential for the presence of historic properties. Assistance regarding information on the location of or potential for the presence of historic resources can be sought from the State Historic Preservation Officer or Tribal Historic Preservation Officer, as appropriate, and the National Register of Historic Places (see 33 CFR 330.4(g)). When reviewing pre-construction notifications, district engineers will comply with the current procedures for addressing the requirements of Section 106 of the National Historic Preservation Act. The district engineer shall make a reasonable and good faith effort to carry out appropriate identification efforts, which may include background research, consultation, oral history interviews, sample field investigation, and field survey. Based on the information submitted and these efforts, the district engineer shall determine whether the proposed activity has the potential to cause an effect on the historic properties. Where the non-Federal applicant has identified historic properties on which the activity may have the potential to cause effects and so notified the Corps, the non-Federal applicant shall not begin the activity until notified by the district engineer either that the activity has no potential to cause effects or that consultation under Section 106 of the NHPA has been completed.

(d) The district engineer will notify the prospective permittee within 45 days of receipt of a complete pre-construction notification whether NHPA Section 106 consultation is required. Section 106 consultation is not required when the Corps determines that the activity does not have the potential to cause effects on historic properties (see 36 CFR §800.3(a)). If NHPA

section 106 consultation is required and will occur, the district engineer will notify the non-Federal applicant that he or she cannot begin work until Section 106 consultation is completed. If the non-Federal applicant has not heard back from the Corps within 45 days, the applicant must still wait for notification from the Corps.

(e) Prospective permittees should be aware that section 110k of the NHPA (16 U.S.C. 470h-2(k)) prevents the Corps from granting a permit or other assistance to an applicant who, with intent to avoid the requirements of Section 106 of the NHPA, has intentionally significantly adversely affected a historic property to which the permit would relate, or having legal power to prevent it, allowed such significant adverse effect to occur, unless the Corps, after consultation with the Advisory Council on Historic Preservation (ACHP), determines that circumstances justify granting such assistance despite the adverse effect created or permitted by the applicant. If circumstances justify granting the assistance, the Corps is required to notify the ACHP and provide documentation specifying the circumstances, the degree of damage to the integrity of any historic properties affected, and proposed mitigation. This documentation must include any views obtained from the applicant, SHPO/THPO, appropriate Indian tribes if the undertaking occurs on or affects historic properties on tribal lands or affects properties of interest to those tribes, and other parties known to have a legitimate interest in the impacts to the permitted activity on historic properties.

21. Discovery of Previously Unknown Remains and Artifacts. If you discover any previously unknown historic, cultural or archeological remains and artifacts while accomplishing the activity authorized by this permit, you must immediately notify the district engineer of what you have found, and to the maximum extent practicable, avoid construction activities that may affect the remains and artifacts until the required coordination has been completed. The district engineer will initiate the Federal, Tribal and state coordination required to determine if the items or remains warrant a recovery effort or if the site is eligible for listing in the National Register of Historic Places.

22. Designated Critical Resource Waters. Critical resource waters include, NOAA-managed marine sanctuaries and marine monuments, and National Estuarine Research Reserves. The district engineer may designate, after notice and opportunity for public comment, additional waters officially designated by a state as having particular environmental or ecological significance, such as outstanding national resource waters or state natural heritage sites. The district engineer may also designate additional critical resource waters after notice and opportunity for public comment.

(a) Discharges of dredged or fill material into waters of the United States are not authorized by NWPs 7, 12, 14, 16, 17, 21, 29, 31, 35, 39, 40, 42, 43, 44, 49, 50, 51, and 52 for any activity within, or directly affecting, critical resource waters, including wetlands adjacent to such waters.

(b) For NWPs 3, 8, 10, 13, 15, 18, 19, 22, 23, 25, 27, 28, 30, 33, 34, 36, 37, and 38, notification is required in accordance with general condition 31, for any activity proposed in the designated critical resource waters including wetlands adjacent to those waters. The district engineer may authorize activities under these NWPs only after it is determined that the impacts to the critical resource waters will be no more than minimal.

23. Mitigation. The district engineer will consider the following factors when determining appropriate and practicable mitigation necessary to ensure that adverse effects on the aquatic environment are minimal:

(a) The activity must be designed and constructed to avoid and minimize adverse effects, both temporary and permanent, to waters of the United States to the maximum extent practicable at the project site (i.e., on site).

(b) Mitigation in all its forms (avoiding, minimizing, rectifying, reducing, or compensating for resource losses) will be required to the extent necessary to ensure that the adverse effects to the aquatic environment are minimal.

(c) Compensatory mitigation at a minimum one-for-one ratio will be required for all wetland losses that exceed 1/10-acre and require pre-construction notification, unless the district engineer determines in writing that either some other form of mitigation would be more environmentally appropriate or the adverse effects of the proposed activity are minimal, and provides a project-specific waiver of this requirement. For wetland losses of 1/10-acre or less that require pre-construction notification, the district engineer may determine on a case-by-case basis that compensatory mitigation is required to ensure that the activity results in minimal adverse effects on the aquatic environment. Compensatory mitigation projects provided to offset losses of aquatic resources must comply with the applicable provisions of 33 CFR part 332.

(1) The prospective permittee is responsible for proposing an appropriate compensatory mitigation option if compensatory mitigation is necessary to ensure that the activity results in minimal adverse effects on the aquatic environment.

(2) Since the likelihood of success is greater and the impacts to potentially valuable uplands are reduced, wetland restoration should be the first compensatory mitigation option considered.

(3) If permittee-responsible mitigation is the proposed option, the prospective permittee is responsible for submitting a mitigation plan. A conceptual or detailed mitigation plan may be used by the district engineer to make the decision on the NWP verification request, but a final mitigation plan that addresses the applicable requirements of 33 CFR 332.4(c)(2) – (14) must be approved by the district engineer before the permittee begins work in waters of the United States, unless the district engineer determines that prior approval of the final mitigation plan is not practicable or not necessary to ensure timely completion of the required compensatory mitigation (see 33 CFR 332.3(k)(3)).

(4) If mitigation bank or in-lieu fee program credits are the proposed option, the mitigation plan only needs to address the baseline conditions at the impact site and the number of credits to be provided.

(5) Compensatory mitigation requirements (e.g., resource type and amount to be provided as compensatory mitigation, site protection, ecological performance standards, monitoring requirements) may be addressed through conditions added to the NWP authorization, instead of components of a compensatory mitigation plan.

(d) For losses of streams or other open waters that require pre-construction notification, the district engineer may require compensatory mitigation, such as stream rehabilitation, enhancement, or preservation, to ensure that the activity results in minimal adverse effects on the aquatic environment.

(e) Compensatory mitigation will not be used to increase the acreage losses allowed by the acreage limits of the NWPs. For example, if an NWP has an acreage limit of 1/2-acre, it cannot be used to authorize any project resulting in the loss of greater than 1/2-acre of waters of

the United States, even if compensatory mitigation is provided that replaces or restores some of the lost waters. However, compensatory mitigation can and should be used, as necessary, to ensure that a project already meeting the established acreage limits also satisfies the minimal impact requirement associated with the NWPs.

(f) Compensatory mitigation plans for projects in or near streams or other open waters will normally include a requirement for the restoration or establishment, maintenance, and legal protection (e.g., conservation easements) of riparian areas next to open waters. In some cases, riparian areas may be the only compensatory mitigation required. Riparian areas should consist of native species. The width of the required riparian area will address documented water quality or aquatic habitat loss concerns. Normally, the riparian area will be 25 to 50 feet wide on each side of the stream, but the district engineer may require slightly wider riparian areas to address documented water quality or habitat loss concerns. If it is not possible to establish a riparian area on both sides of a stream, or if the waterbody is a lake or coastal waters, then restoring or establishing a riparian area along a single bank or shoreline may be sufficient. Where both wetlands and open waters exist on the project site, the district engineer will determine the appropriate compensatory mitigation (e.g., riparian areas and/or wetlands compensation) based on what is best for the aquatic environment on a watershed basis. In cases where riparian areas are determined to be the most appropriate form of compensatory mitigation, the district engineer may waive or reduce the requirement to provide wetland compensatory mitigation for wetland losses.

(g) Permittees may propose the use of mitigation banks, in-lieu fee programs, or separate permittee-responsible mitigation. For activities resulting in the loss of marine or estuarine resources, permittee-responsible compensatory mitigation may be environmentally preferable if there are no mitigation banks or in-lieu fee programs in the area that have marine or estuarine credits available for sale or transfer to the permittee. For permittee-responsible mitigation, the special conditions of the NWP verification must clearly indicate the party or parties responsible for the implementation and performance of the compensatory mitigation project, and, if required, its long-term management.

(h) Where certain functions and services of waters of the United States are permanently adversely affected, such as the conversion of a forested or scrub-shrub wetland to a herbaceous wetland in a permanently maintained utility line right-of-way, mitigation may be required to reduce the adverse effects of the project to the minimal level.

24. Safety of Impoundment Structures. To ensure that all impoundment structures are safely designed, the district engineer may require non-Federal applicants to demonstrate that the structures comply with established state dam safety criteria or have been designed by qualified persons. The district engineer may also require documentation that the design has been independently reviewed by similarly qualified persons, and appropriate modifications made to ensure safety.

25. Water Quality. Where States and authorized Tribes, or EPA where applicable, have not previously certified compliance of an NWP with CWA Section 401, individual 401 Water Quality Certification must be obtained or waived (see 33 CFR 330.4(c)). The district engineer or State or Tribe may require additional water quality management measures to ensure that the authorized activity does not result in more than minimal degradation of water quality.

26. Coastal Zone Management. In coastal states where an NWP has not previously received a state coastal zone management consistency concurrence, an individual state coastal zone management consistency concurrence must be obtained, or a presumption of concurrence must occur (see 33 CFR 330.4(d)). The district engineer or a State may require additional measures to ensure that the authorized activity is consistent with state coastal zone management requirements.

27. Regional and Case-By-Case Conditions. The activity must comply with any regional conditions that may have been added by the Division Engineer (see 33 CFR 330.4(e)) and with any case specific conditions added by the Corps or by the state, Indian Tribe, or U.S. EPA in its section 401 Water Quality Certification, or by the state in its Coastal Zone Management Act consistency determination.

28. Use of Multiple Nationwide Permits. The use of more than one NWP for a single and complete project is prohibited, except when the acreage loss of waters of the United States authorized by the NWPs does not exceed the acreage limit of the NWP with the highest specified acreage limit. For example, if a road crossing over tidal waters is constructed under NWP 14, with associated bank stabilization authorized by NWP 13, the maximum acreage loss of waters of the United States for the total project cannot exceed 1/3-acre.

29. Transfer of Nationwide Permit Verifications. If the permittee sells the property associated with a nationwide permit verification, the permittee may transfer the nationwide permit verification to the new owner by submitting a letter to the appropriate Corps district office to validate the transfer. A copy of the nationwide permit verification must be attached to the letter, and the letter must contain the following statement and signature:

"When the structures or work authorized by this nationwide permit are still in existence at the time the property is transferred, the terms and conditions of this nationwide permit, including any special conditions, will continue to be binding on the new owner(s) of the property. To validate the transfer of this nationwide permit and the associated liabilities associated with compliance with its terms and conditions, have the transferee sign and date below."

_____

(Transferee)

_____

(Date)

* 30. Compliance Certification. Each permittee who receives an NWP verification letter from the Corps must provide a signed certification documenting completion of the authorized activity and any required compensatory mitigation. The success of any required permittee-responsible mitigation, including the achievement of ecological performance standards, will be addressed separately by the district engineer. The Corps will provide the permittee the certification document with the NWP verification letter. The certification document will include:

(a) A statement that the authorized work was done in accordance with the NWP authorization, including any general, regional, or activity-specific conditions;

(b) A statement that the implementation of any required compensatory mitigation was completed in accordance with the permit conditions. If credits from a mitigation bank or in-lieu fee program are used to satisfy the compensatory mitigation requirements, the certification must include the documentation required by 33 CFR 332.3(l)(3) to confirm that the permittee secured the appropriate number and resource type of credits; and

(c) The signature of the permittee certifying the completion of the work and mitigation.

* 31. Pre-Construction Notification. (a) Timing. Where required by the terms of the NWP, the prospective permittee must notify the district engineer by submitting a pre-construction notification (PCN) as early as possible. The district engineer must determine if the PCN is complete within 30 calendar days of the date of receipt and, if the PCN is determined to be incomplete, notify the prospective permittee within that 30 day period to request the additional information necessary to make the PCN complete. The request must specify the information needed to make the PCN complete. As a general rule, district engineers will request additional information necessary to make the PCN complete only once. However, if the prospective permittee does not provide all of the requested information, then the district engineer will notify the prospective permittee that the PCN is still incomplete and the PCN review process will not commence until all of the requested information has been received by the district engineer. The prospective permittee shall not begin the activity until either:

(1) He or she is notified in writing by the district engineer that the activity may proceed under the NWP with any special conditions imposed by the district or division engineer; or

(2) 45 calendar days have passed from the district engineer's receipt of the complete PCN and the prospective permittee has not received written notice from the district or division engineer. However, if the permittee was required to notify the Corps pursuant to general condition 18 that listed species or critical habitat might be affected or in the vicinity of the project, or to notify the Corps pursuant to general condition 20 that the activity may have the potential to cause effects to historic properties, the permittee cannot begin the activity until receiving written notification from the Corps that there is "no effect" on listed species or "no potential to cause effects" on historic properties, or that any consultation required under Section 7 of the Endangered Species Act (see 33 CFR 330.4(f)) and/or Section 106 of the National Historic Preservation (see 33 CFR 330.4(g)) has been completed. Also, work cannot begin under NWPs 21, 49, or 50 until the permittee has received written approval from the Corps. If the proposed activity requires a written waiver to exceed specified limits of an NWP, the permittee may not begin the activity until the district engineer issues the waiver. If the district or division engineer notifies the permittee in writing that an individual permit is required within 45 calendar days of receipt of a complete PCN, the permittee cannot begin the activity until an individual permit has been obtained. Subsequently, the permittee's right to proceed under the NWP may be modified, suspended, or revoked only in accordance with the procedure set forth in 33 CFR 330.5(d)(2).

(b) Contents of Pre-Construction Notification: The PCN must be in writing and include the following information:

(1) Name, address and telephone numbers of the prospective permittee;

(2) Location of the proposed project;

(3) A description of the proposed project; the project's purpose; direct and indirect adverse environmental effects the project would cause, including the anticipated amount of loss of water of the United States expected to result from the NWP activity, in acres, linear feet, or other appropriate unit of measure; any other NWP(s), regional general permit(s), or individual permit(s) used or intended to be used to authorize any part of the proposed project or any related activity. The description should be sufficiently detailed to allow the district engineer to determine that the adverse effects of the project will be minimal and to determine the need for compensatory mitigation. Sketches should be provided when necessary to show that the activity complies with the terms of the NWP. (Sketches usually clarify the project and when provided results in a quicker decision. Sketches should contain sufficient detail to provide an illustrative description of the proposed activity (e.g., a conceptual plan), but do not need to be detailed engineering plans);

(4) The PCN must include a delineation of wetlands, other special aquatic sites, and other waters, such as lakes and ponds, and perennial, intermittent, and ephemeral streams, on the project site. Wetland delineations must be prepared in accordance with the current method required by the Corps. The permittee may ask the Corps to delineate the special aquatic sites and other waters on the project site, but there may be a delay if the Corps does the delineation, especially if the project site is large or contains many waters of the United States. Furthermore, the 45 day period will not start until the delineation has been submitted to or completed by the Corps, as appropriate;

(5) If the proposed activity will result in the loss of greater than 1/10-acre of wetlands and a PCN is required, the prospective permittee must submit a statement describing how the mitigation requirement will be satisfied, or explaining why the adverse effects are minimal and why compensatory mitigation should not be required. As an alternative, the prospective permittee may submit a conceptual or detailed mitigation plan.

(6) If any listed species or designated critical habitat might be affected or is in the vicinity of the project, or if the project is located in designated critical habitat, for non-Federal applicants the PCN must include the name(s) of those endangered or threatened species that might be affected by the proposed work or utilize the designated critical habitat that may be affected by the proposed work. Federal applicants must provide documentation demonstrating compliance with the Endangered Species Act; and

(7) For an activity that may affect a historic property listed on, determined to be eligible for listing on, or potentially eligible for listing on, the National Register of Historic Places, for non-Federal applicants the PCN must state which historic property may be affected by the proposed work or include a vicinity map indicating the location of the historic property. Federal applicants must provide documentation demonstrating compliance with Section 106 of the National Historic Preservation Act.

(c) Form of Pre-Construction Notification: The standard individual permit application form (Form ENG 4345) may be used, but the completed application form must clearly indicate that it is a PCN and must include all of the information required in paragraphs (b)(1) through (7) of this general condition. A letter containing the required information may also be used.

(d) Agency Coordination: (1) The district engineer will consider any comments from Federal and state agencies concerning the proposed activity's compliance with the terms and conditions of the NWPs and the need for mitigation to reduce the project's adverse environmental effects to a minimal level.

(2) For all NWP activities that require pre-construction notification and result in the loss of greater than 1/2-acre of waters of the United States, for NWP 21, 29, 39, 40, 42, 43, 44, 50, 51, and 52 activities that require pre-construction notification and will result in the loss of greater than 300 linear feet of intermittent and ephemeral stream bed, and for all NWP 48 activities that require pre-construction notification, the district engineer will immediately provide (e.g., via e-mail, facsimile transmission, overnight mail, or other expeditious manner) a copy of the complete PCN to the appropriate Federal or state offices (U.S. FWS, state natural resource or water quality agency, EPA, State Historic Preservation Officer (SHPO) or Tribal Historic Preservation Office (THPO), and, if appropriate, the NMFS). With the exception of NWP 37, these agencies will have 10 calendar days from the date the material is transmitted to telephone or fax the district engineer notice that they intend to provide substantive, site-specific comments. The comments must explain why the agency believes the adverse effects will be more than minimal. If so contacted by an agency, the district engineer will wait an additional 15 calendar days before making a decision on the pre-construction notification. The district engineer will fully consider agency comments received within the specified time frame concerning the proposed activity's compliance with the terms and conditions of the NWPs, including the need for mitigation to ensure the net adverse environmental effects to the aquatic environment of the proposed activity are minimal. The district engineer will provide no response to the resource agency, except as provided below. The district engineer will indicate in the administrative record associated with each pre-construction notification that the resource agencies' concerns were considered. For NWP 37, the emergency watershed protection and rehabilitation activity may proceed immediately in cases where there is an unacceptable hazard to life or a significant loss of property or economic hardship will occur. The district engineer will consider any comments received to decide whether the NWP 37 authorization should be modified, suspended, or revoked in accordance with the procedures at 33 CFR 330.5.

(3) In cases of where the prospective permittee is not a Federal agency, the district engineer will provide a response to NMFS within 30 calendar days of receipt of any Essential Fish Habitat conservation recommendations, as required by Section 305(b)(4)(B) of the Magnuson-Stevens Fishery Conservation and Management Act.

(4) Applicants are encouraged to provide the Corps with either electronic files or multiple copies of pre-construction notifications to expedite agency coordination.

D. District Engineer's Decision

1. In reviewing the PCN for the proposed activity, the district engineer will determine whether the activity authorized by the NWP will result in more than minimal individual or cumulative adverse environmental effects or may be contrary to the public interest. For a linear project, this determination will include an evaluation of the individual crossings to determine whether they individually satisfy the terms and conditions of the NWP(s), as well as the cumulative effects caused by all of the crossings authorized by NWP. If an applicant requests a waiver of the 300 linear foot limit on impacts to intermittent or ephemeral streams or of an otherwise applicable limit, as provided for in NWPs 13, 21, 29, 36, 39, 40, 42, 43, 44, 50, 51 or 52, the district engineer will only grant the waiver upon a written determination that the NWP activity will result in minimal adverse effects. When making minimal effects determinations the district engineer will consider the direct and indirect effects caused by the NWP activity. The district engineer will also consider site specific factors, such as the environmental setting in the

vicinity of the NWP activity, the type of resource that will be affected by the NWP activity, the functions provided by the aquatic resources that will be affected by the NWP activity, the degree or magnitude to which the aquatic resources perform those functions, the extent that aquatic resource functions will be lost as a result of the NWP activity (e.g., partial or complete loss), the duration of the adverse effects (temporary or permanent), the importance of the aquatic resource functions to the region (e.g., watershed or ecoregion), and mitigation required by the district engineer. If an appropriate functional assessment method is available and practicable to use, that assessment method may be used by the district engineer to assist in the minimal adverse effects determination. The district engineer may add case-specific special conditions to the NWP authorization to address site-specific environmental concerns.

2. If the proposed activity requires a PCN and will result in a loss of greater than 1/10-acre of wetlands, the prospective permittee should submit a mitigation proposal with the PCN. Applicants may also propose compensatory mitigation for projects with smaller impacts. The district engineer will consider any proposed compensatory mitigation the applicant has included in the proposal in determining whether the net adverse environmental effects to the aquatic environment of the proposed activity are minimal. The compensatory mitigation proposal may be either conceptual or detailed. If the district engineer determines that the activity complies with the terms and conditions of the NWP and that the adverse effects on the aquatic environment are minimal, after considering mitigation, the district engineer will notify the permittee and include any activity-specific conditions in the NWP verification the district engineer deems necessary. Conditions for compensatory mitigation requirements must comply with the appropriate provisions at 33 CFR 332.3(k). The district engineer must approve the final mitigation plan before the permittee commences work in waters of the United States, unless the district engineer determines that prior approval of the final mitigation plan is not practicable or not necessary to ensure timely completion of the required compensatory mitigation. If the prospective permittee elects to submit a compensatory mitigation plan with the PCN, the district engineer will expeditiously review the proposed compensatory mitigation plan. The district engineer must review the proposed compensatory mitigation plan within 45 calendar days of receiving a complete PCN and determine whether the proposed mitigation would ensure no more than minimal adverse effects on the aquatic environment. If the net adverse effects of the project on the aquatic environment (after consideration of the compensatory mitigation proposal) are determined by the district engineer to be minimal, the district engineer will provide a timely written response to the applicant. The response will state that the project can proceed under the terms and conditions of the NWP, including any activity-specific conditions added to the NWP authorization by the district engineer.

3. If the district engineer determines that the adverse effects of the proposed work are more than minimal, then the district engineer will notify the applicant either: (a) That the project does not qualify for authorization under the NWP and instruct the applicant on the procedures to seek authorization under an individual permit; (b) that the project is authorized under the NWP subject to the applicant's submission of a mitigation plan that would reduce the adverse effects on the aquatic environment to the minimal level; or (c) that the project is authorized under the NWP with specific modifications or conditions. Where the district engineer determines that mitigation is required to ensure no more than minimal adverse effects occur to the aquatic environment, the activity will be authorized within the 45-day PCN period, with activity-specific

conditions that state the mitigation requirements. The authorization will include the necessary conceptual or detailed mitigation or a requirement that the applicant submit a mitigation plan that would reduce the adverse effects on the aquatic environment to the minimal level. When mitigation is required, no work in waters of the United States may occur until the district engineer has approved a specific mitigation plan or has determined that prior approval of a final mitigation plan is not practicable or not necessary to ensure timely completion of the required compensatory mitigation.

FURTHER INFORMATION

1. District Engineers have authority to determine if an activity complies with the terms and conditions of an NWP.
2. NWPs do not obviate the need to obtain other federal, state, or local permits, approvals, or authorizations required by law.
3. NWPs do not grant any property rights or exclusive privileges.
4. NWPs do not authorize any injury to the property or rights of others.
5. NWPs do not authorize interference with any existing or proposed Federal project.

DEFINITIONS

Best management practices (BMPs): Policies, practices, procedures, or structures implemented to mitigate the adverse environmental effects on surface water quality resulting from development. BMPs are categorized as structural or non-structural.

Compensatory mitigation: The restoration (re-establishment or rehabilitation), establishment (creation), enhancement, and/or in certain circumstances preservation of aquatic resources for the purposes of offsetting unavoidable adverse impacts which remain after all appropriate and practicable avoidance and minimization has been achieved.

Currently serviceable: Useable as is or with some maintenance, but not so degraded as to essentially require reconstruction.

Direct effects: Effects that are caused by the activity and occur at the same time and place.

Discharge: The term "discharge" means any discharge of dredged or fill material.

Enhancement: The manipulation of the physical, chemical, or biological characteristics of an aquatic resource to heighten, intensify, or improve a specific aquatic resource function(s). Enhancement results in the gain of selected aquatic resource function(s), but may also lead to a decline in other aquatic resource function(s). Enhancement does not result in a gain in aquatic resource area.

Ephemeral stream: An ephemeral stream has flowing water only during, and for a short duration after, precipitation events in a typical year. Ephemeral stream beds are located above the water table year-round. Groundwater is not a source of water for the stream. Runoff from rainfall is the primary source of water for stream flow.

Establishment (creation): The manipulation of the physical, chemical, or biological characteristics present to develop an aquatic resource that did not previously exist at an upland site. Establishment results in a gain in aquatic resource area.

High Tide Line: The line of intersection of the land with the water's surface at the maximum height reached by a rising tide. The high tide line may be determined, in the absence

of actual data, by a line of oil or scum along shore objects, a more or less continuous deposit of fine shell or debris on the foreshore or berm, other physical markings or characteristics, vegetation lines, tidal gages, or other suitable means that delineate the general height reached by a rising tide. The line encompasses spring high tides and other high tides that occur with periodic frequency but does not include storm surges in which there is a departure from the normal or predicted reach of the tide due to the piling up of water against a coast by strong winds such as those accompanying a hurricane or other intense storm.

Historic Property: Any prehistoric or historic district, site (including archaeological site), building, structure, or other object included in, or eligible for inclusion in, the National Register of Historic Places maintained by the Secretary of the Interior. This term includes artifacts, records, and remains that are related to and located within such properties. The term includes properties of traditional religious and cultural importance to an Indian tribe or Native Hawaiian organization and that meet the National Register criteria (36 CFR part 60).

Independent utility: A test to determine what constitutes a single and complete non-linear project in the Corps regulatory program. A project is considered to have independent utility if it would be constructed absent the construction of other projects in the project area. Portions of a multi-phase project that depend upon other phases of the project do not have independent utility. Phases of a project that would be constructed even if the other phases were not built can be considered as separate single and complete projects with independent utility.

Indirect effects: Effects that are caused by the activity and are later in time or farther removed in distance, but are still reasonably foreseeable.

Intermittent stream: An intermittent stream has flowing water during certain times of the year, when groundwater provides water for stream flow. During dry periods, intermittent streams may not have flowing water. Runoff from rainfall is a supplemental source of water for stream flow.

Loss of waters of the United States: Waters of the United States that are permanently adversely affected by filling, flooding, excavation, or drainage because of the regulated activity. Permanent adverse effects include permanent discharges of dredged or fill material that change an aquatic area to dry land, increase the bottom elevation of a waterbody, or change the use of a waterbody. The acreage of loss of waters of the United States is a threshold measurement of the impact to jurisdictional waters for determining whether a project may qualify for an NWP; it is not a net threshold that is calculated after considering compensatory mitigation that may be used to offset losses of aquatic functions and services. The loss of stream bed includes the linear feet of stream bed that is filled or excavated. Waters of the United States temporarily filled, flooded, excavated, or drained, but restored to pre-construction contours and elevations after construction, are not included in the measurement of loss of waters of the United States. Impacts resulting from activities eligible for exemptions under Section 404(f) of the Clean Water Act are not considered when calculating the loss of waters of the United States.

Non-tidal wetland: A non-tidal wetland is a wetland that is not subject to the ebb and flow of tidal waters. The definition of a wetland can be found at 33 CFR 328.3(b). Non-tidal wetlands contiguous to tidal waters are located landward of the high tide line (i.e., spring high tide line).

Open water: For purposes of the NWPs, an open water is any area that in a year with normal patterns of precipitation has water flowing or standing above ground to the extent that an ordinary high water mark can be determined. Aquatic vegetation within the area of standing or

flowing water is either non-emergent, sparse, or absent. Vegetated shallows are considered to be open waters. Examples of "open waters" include rivers, streams, lakes, and ponds.

Ordinary High Water Mark: An ordinary high water mark is a line on the shore established by the fluctuations of water and indicated by physical characteristics, or by other appropriate means that consider the characteristics of the surrounding areas (see 33 CFR 328.3(e)).

Perennial stream: A perennial stream has flowing water year-round during a typical year. The water table is located above the stream bed for most of the year. Groundwater is the primary source of water for stream flow. Runoff from rainfall is a supplemental source of water for stream flow.

Practicable: Available and capable of being done after taking into consideration cost, existing technology, and logistics in light of overall project purposes.

Pre-construction notification: A request submitted by the project proponent to the Corps for confirmation that a particular activity is authorized by nationwide permit. The request may be a permit application, letter, or similar document that includes information about the proposed work and its anticipated environmental effects. Pre-construction notification may be required by the terms and conditions of a nationwide permit, or by regional conditions. A pre-construction notification may be voluntarily submitted in cases where pre-construction notification is not required and the project proponent wants confirmation that the activity is authorized by nationwide permit.

Preservation: The removal of a threat to, or preventing the decline of, aquatic resources by an action in or near those aquatic resources. This term includes activities commonly associated with the protection and maintenance of aquatic resources through the implementation of appropriate legal and physical mechanisms. Preservation does not result in a gain of aquatic resource area or functions.

Re-establishment: The manipulation of the physical, chemical, or biological characteristics of a site with the goal of returning natural/historic functions to a former aquatic resource. Re-establishment results in rebuilding a former aquatic resource and results in a gain in aquatic resource area and functions.

Rehabilitation: The manipulation of the physical, chemical, or biological characteristics of a site with the goal of repairing natural/historic functions to a degraded aquatic resource. Rehabilitation results in a gain in aquatic resource function, but does not result in a gain in aquatic resource area.

Restoration: The manipulation of the physical, chemical, or biological characteristics of a site with the goal of returning natural/historic functions to a former or degraded aquatic resource. For the purpose of tracking net gains in aquatic resource area, restoration is divided into two categories: re-establishment and rehabilitation.

Riffle and pool complex: Riffle and pool complexes are special aquatic sites under the 404(b)(1) Guidelines. Riffle and pool complexes sometimes characterize steep gradient sections of streams. Such stream sections are recognizable by their hydraulic characteristics. The rapid movement of water over a course substrate in riffles results in a rough flow, a turbulent surface, and high dissolved oxygen levels in the water. Pools are deeper areas associated with riffles. A slower stream velocity, a streaming flow, a smooth surface, and a finer substrate characterize pools.

Riparian areas: Riparian areas are lands adjacent to streams, lakes, and estuarine-marine shorelines. Riparian areas are transitional between terrestrial and aquatic ecosystems, through

which surface and subsurface hydrology connects riverine, lacustrine, estuarine, and marine waters with their adjacent wetlands, non-wetland waters, or uplands. Riparian areas provide a variety of ecological functions and services and help improve or maintain local water quality. (See general condition 23.)

Shellfish seeding: The placement of shellfish seed and/or suitable substrate to increase shellfish production. Shellfish seed consists of immature individual shellfish or individual shellfish attached to shells or shell fragments (i.e., spat on shell). Suitable substrate may consist of shellfish shells, shell fragments, or other appropriate materials placed into waters for shellfish habitat.

Single and complete linear project: A linear project is a project constructed for the purpose of getting people, goods, or services from a point of origin to a terminal point, which often involves multiple crossings of one or more waterbodies at separate and distant locations. The term "single and complete project" is defined as that portion of the total linear project proposed or accomplished by one owner/developer or partnership or other association of owners/developers that includes all crossings of a single water of the United States (i.e., a single waterbody) at a specific location. For linear projects crossing a single or multiple waterbodies several times at separate and distant locations, each crossing is considered a single and complete project for purposes of NWP authorization. However, individual channels in a braided stream or river, or individual arms of a large, irregularly shaped wetland or lake, etc., are not separate waterbodies, and crossings of such features cannot be considered separately.

Single and complete non-linear project: For non-linear projects, the term "single and complete project" is defined at 33 CFR 330.2(i) as the total project proposed or accomplished by one owner/developer or partnership or other association of owners/developers. A single and complete non-linear project must have independent utility (see definition of "independent utility"). Single and complete non-linear projects may not be "piecemealed" to avoid the limits in an NWP authorization.

Stormwater management: Stormwater management is the mechanism for controlling stormwater runoff for the purposes of reducing downstream erosion, water quality degradation, and flooding and mitigating the adverse effects of changes in land use on the aquatic environment.

Stormwater management facilities: Stormwater management facilities are those facilities, including but not limited to, stormwater retention and detention ponds and best management practices, which retain water for a period of time to control runoff and/or improve the quality (i.e., by reducing the concentration of nutrients, sediments, hazardous substances and other pollutants) of stormwater runoff.

Stream bed: The substrate of the stream channel between the ordinary high water marks. The substrate may be bedrock or inorganic particles that range in size from clay to boulders. Wetlands contiguous to the stream bed, but outside of the ordinary high water marks, are not considered part of the stream bed.

Stream channelization: The manipulation of a stream's course, condition, capacity, or location that causes more than minimal interruption of normal stream processes. A channelized stream remains a water of the United States.

Structure: An object that is arranged in a definite pattern of organization. Examples of structures include, without limitation, any pier, boat dock, boat ramp, wharf, dolphin, weir, boom, breakwater, bulkhead, revetment, riprap, jetty, artificial island, artificial reef, permanent

mooring structure, power transmission line, permanently moored floating vessel, piling, aid to navigation, or any other manmade obstacle or obstruction.

Tidal wetland: A tidal wetland is a wetland (i.e., water of the United States) that is inundated by tidal waters. The definitions of a wetland and tidal waters can be found at 33 CFR 328.3(b) and 33 CFR 328.3(f), respectively. Tidal waters rise and fall in a predictable and measurable rhythm or cycle due to the gravitational pulls of the moon and sun. Tidal waters end where the rise and fall of the water surface can no longer be practically measured in a predictable rhythm due to masking by other waters, wind, or other effects. Tidal wetlands are located channelward of the high tide line, which is defined at 33 CFR 328.3(d).

Vegetated shallows: Vegetated shallows are special aquatic sites under the 404(b)(1) Guidelines. They are areas that are permanently inundated and under normal circumstances have rooted aquatic vegetation, such as seagrasses in marine and estuarine systems and a variety of vascular rooted plants in freshwater systems.

Waterbody: For purposes of the NWPs, a waterbody is a jurisdictional water of the United States. If a jurisdictional wetland is adjacent – meaning bordering, contiguous, or neighboring – to a waterbody determined to be a water of the United States under 33 CFR 328.3(a)(1)-(6), that waterbody and its adjacent wetlands are considered together as a single aquatic unit (see 33 CFR 328.4(c)(2)). Examples of "waterbodies" include streams, rivers, lakes, ponds, and wetlands.

Final Regional Conditions 2012

NOTICE ABOUT WEB LINKS IN THIS DOCUMENT:
The web links (both internal to our District and any external links to collaborating agencies) in this document are valid at the time of publication. However, the Wilmington District Regulatory Program web page addresses, as with other agency web sites, may change over the timeframe of the five-year Nationwide Permit renewal cycle, in response to policy mandates or technology advances. While we will make every effort to check on the integrity of our web links and provide re-direct pages whenever possible, we ask that you report any broken links to us so we can keep the page information current and usable. We apologize in advanced for any broken links that you may encounter, and we ask that you navigate from the regulatory home page (wetlands and stream permits) of the Wilmington District Corps of Engineers, to the "Permits" section of our web site to find links for pages that cannot be found by clicking directly on the listed web link in this document.

Final 2012 Regional Conditions for Nationwide Permits (NWP) in the Wilmington District

1.0 Excluded Waters

The Corps has identified waters that will be excluded from the use of all NWP's during certain timeframes. These waters are:

1.1 Anadromous Fish Spawning Areas

Waters of the United States identified by either the North Carolina Division of Marine Fisheries (NCDMF) or the North Carolina Wildlife Resources Commission (NCWRC) as anadromous fish spawning areas are excluded during the period between February 15 and June 30, without prior written approval from NCDMF or NCWRC and the Corps.

1.2 Trout Waters Moratorium

Waters of the United States in the twenty-five designated trout counties of North Carolina are excluded during the period between October 15 and April 15 without prior written approval from the NCWRC. (See Section 2.7 for a list of the twenty-five trout counties).

1.3 Sturgeon Spawning Areas as Designated by the National Marine Fisheries Service (NMFS)

Waters of the United States designated as sturgeon spawning areas are excluded during the period between February 1 and June 30, without prior written approval from the NMFS.

* 2.0 Waters Requiring Additional Notification

The Corps has identified waters that will be subject to additional notification requirements for activities authorized by all NWP's. These waters are:

* 2.1 Western NC Counties that Drain to Designated Critical Habitat

For proposed activities within Waters of the U.S. that require a Pre-Construction Notification pursuant to General Condition 31 (PCN) and are located in the sixteen counties listed below, applicants must provide a copy of the PCN to the US Fish and Wildlife Service, 160 Zillicoa Street, Asheville, North Carolina 28801. This PCN must be sent concurrently to the US Fish and Wildlife Service and the Corps Asheville Regulatory Field Office. Please see General Condition 18 for specific notification requirements related to Federally Endangered Species and the following website for information on the location of designated critical habitat.

Counties with tributaries that drain to designated critical habitat that require notification to the Asheville US Fish and Wildlife Service: Avery, Cherokee, Forsyth, Graham, Haywood, Henderson, Jackson, Macon Mecklenburg, Mitchell, Stokes, Surry, Swain, Transylvania, Union and Yancey.

Website and office addresses for Endangered Species Act Information:

The Wilmington District has developed the following website for applicants which provides guidelines on how to review linked websites and maps in order to fulfill NWP general condition 18 requirements: http://www.saw.usace.army.mil/wetlands/ESA

Applicants who do not have internet access may contact the appropriate US Fish and Wildlife Service offices listed below or the US Army Corps of Engineers at (910) 251- 4633:

US Fish and Wildlife Service
Asheville Field Office
160 Zillicoa Street
Asheville, NC 28801
Telephone: (828) 258-3939

Asheville US Fish and Wildlife Service Office counties: All counties west of and including Anson, Stanly, Davidson, Forsyth and Stokes Counties

US Fish and Wildlife Service
Raleigh Field Office
Post Office Box 33726
Raleigh, NC 27636-3726
Telephone: (919) 856-4520

Raleigh US Fish and Wildlife Service Office counties: all counties east of and including Richmond, Montgomery, Randolph, Guilford, and Rockingham Counties.

* **2.2 Special Designation Waters**

Prior to the use of any NWP in any of the following identified waters and contiguous wetlands in North Carolina, applicants must comply with Nationwide Permit General Condition 31 (PCN). The North Carolina waters and contiguous wetlands that require additional notification requirements are:

"Outstanding Resource Waters" (ORW) or "High Quality Waters" (HQW) as designated by the North Carolina Environmental Management Commission; "Inland Primary Nursery Areas" (IPNA) as designated by the NCWRC; "Contiguous Wetlands" as defined by the North Carolina Environmental Management Commission; or "Primary Nursery Areas" (PNA) as designated by the North Carolina Marine Fisheries Commission..

2.3 Coastal Area Management Act (CAMA) Areas of Environmental Concern

Non-federal applicants for any NWP in a designated "Area of Environmental Concern" (AEC) in the twenty (20) counties of Eastern North Carolina covered by the North Carolina Coastal Area Management Act (CAMA) must also obtain the required CAMA permit. Development activities for non-federal projects may not commence until a copy of the approved CAMA permit is furnished to the appropriate Wilmington District Regulatory Field Office (Wilmington Field Office – 69 Darlington Avenue, Wilmington, NC 28403 or Washington Field Office – 2407 West 5th Street, Washington, NC 27889).

* **2.4 Barrier Islands**

Prior to the use of any NWP on a barrier island of North Carolina, applicants must comply with Nationwide Permit General Condition 31 (PCN).

* **2.5 Mountain or Piedmont Bogs**

Prior to the use of any NWP in a Bog classified by the North Carolina Wetland Assessment Methodology (NCWAM), applicants shall comply with Nationwide Permit General Condition 31 (PCN). The latest version of NCWAM is located on the NC DWQ web site at: http://portal.ncdenr.org/web/wq/swp/ws/pdu/ncwam .

* **2.6 Animal Waste Facilities**

Prior to use of any NWP for construction of animal waste facilities in waters of the US, including wetlands, applicants shall comply with Nationwide Permit General Condition 31 (PCN).

* **2.7 Trout Waters**

Prior to any discharge of dredge or fill material into streams or waterbodies within the twenty-five (25) designated trout counties of North Carolina, the applicant shall comply with Nationwide Permit General Condition 31 (PCN). The applicant shall also provide a copy of the notification to the appropriate NCWRC office to facilitate the determination of any potential

impacts to designated Trout Waters. Notification to the Corps of Engineers will include a statement with the name of the NCWRC biologist contacted, the date of the notification, the location of work, a delineation of wetlands, a discussion of alternatives to working in the mountain trout waters, why alternatives were not selected, and a plan to provide compensatory mitigation for all unavoidable adverse impacts to mountain trout waters.

NCWRC and NC Trout Counties

Western Piedmont Region Coordinator	Alleghany	Caldwell	Watauga
20830 Great Smoky Mtn. Expressway	Ashe	Mitchell	Wilkes
Waynesville, NC 28786	Avery	Stokes	
Telephone: (828) 452-2546	Burke	Surry	

Mountain Region Coordinator	Buncombe	Henderson	Polk
20830 Great Smoky Mtn. Expressway	Cherokee	Jackson	Rutherford
Waynesville, NC 28786	Clay	Macon	Swain
Telephone: (828) 452-2546	Graham	Madison	Transylvania
Fax: (828) 452-7772	Haywood	McDowell	Yancey

3.0 List of Corps Regional Conditions for All Nationwide Permits

The following conditions apply to all Nationwide Permits in the Wilmington District:

3.1 Limitation of Loss of Perennial Stream Bed

NWPs may not be used for activities that may result in the loss or degradation of greater than 300 total linear feet of perennial, intermittent or ephemeral stream, unless the District Commander has waived the 300 linear foot limit for ephemeral and intermittent streams on a case-by-case basis and he determines that the proposed activity will result in minimal individual and cumulative adverse impacts to the aquatic environment. Loss of stream includes the linear feet of stream bed that is filled, excavated, or flooded by the proposed activity. Waivers for the loss of ephemeral and intermittent streams must be in writing and documented by appropriate/accepted stream quality assessments*. This waiver only applies to the 300 linear feet threshold for NWPs.

*NOTE: Applicants should utilize the most current methodology prescribed by Wilmington District to assess stream function and quality. Information can be found at:

http://www.saw.usace.army.mil/wetlands/permits/nwp/nwp2012 (see "Quick Links")

3.2 Mitigation for Loss of Stream Bed

For any NWP that results in a loss of more than 150 linear feet of perennial and/or ephemeral/intermittent stream, the applicant shall provide a mitigation proposal to compensate for more than minimal individual and cumulative adverse impacts to the aquatic environment. For stream losses less than 150 linear feet, that require a PCN, the District Commander may determine, on a case-by-case basis that compensatory mitigation is required to ensure that the activity results in minimal adverse effect on the aquatic environment.

3.3 Pre-construction Notification for Loss of Streambed Exceeding 150 Feet.

Prior to use of any NWP for any activity which impacts more than 150 total linear feet of perennial stream or ephemeral/ intermittent stream, the applicant must comply with Nationwide Permit General Condition 31 (PCN). This applies to NWPs that do not have specific notification requirements. If a NWP has specific notification requirements, the requirements of the NWP should be followed.

3.4 Restriction on Use of Live Concrete

For all NWPs which allow the use of concrete as a building material, live or fresh concrete, including bags of uncured concrete, may not come into contact with the water in or entering into waters of the US. Water inside coffer dams or casings that has been in contact with wet concrete shall only be returned to waters of the US when it is no longer poses a threat to aquatic organisms.

3.5 Requirements for Using Riprap for Bank Stabilization

For all NWPs that allow for the use of riprap material for bank stabilization, the following measures shall be applied:

3.5.1. Filter cloth must be placed underneath the riprap as an additional requirement of its use in North Carolina waters.

3.5.2. The placement of riprap shall be limited to the areas depicted on submitted work plan drawings.

3.5.3. The riprap material shall be clean and free from loose dirt or any pollutant except in trace quantities that would not have an adverse environmental effect.

3.5.4. It shall be of a size sufficient to prevent its movement from the authorized alignment by natural forces under normal conditions.

3.5.5. The riprap material shall consist of clean rock or masonry material such as, but not limited to, granite, marl, or broken concrete.

3.5.6. A waiver from the specifications in this Regional Condition may be requested in writing. The waiver will only be issued if it can be demonstrated that the impacts of complying with this Regional condition would result in greater adverse impacts to the aquatic environment.

3.6 Safe Passage Requirements for Culvert Placement

For all NWPs that involve the construction/installation of culverts, measures will be included in the construction/installation that will promote the safe passage of fish and other aquatic organisms. The dimension, pattern, and profile of the stream above and below a pipe or culvert should not be modified by widening the stream channel or by reducing the depth of the stream in connection with the construction activity. The width, height, and gradient of a proposed culvert should be such as to pass the average historical low flow and spring flow without adversely altering flow velocity. Spring flow should be determined from gage data, if available. In the absence of such data, bankfull flow can be used as a comparable level.

In the twenty (20) counties of North Carolina designated as coastal counties by the Coastal Area Management Act (CAMA): All pipes/culverts must be sufficiently sized to allow for the burial of the bottom of the pipe/culvert at least one foot below normal bed elevation when they are placed within the Public Trust Area of Environmental Concern (AEC) and/or the Estuarine Waters AEC as designated by CAMA, and/or all streams appearing as blue lines on United States Geological Survey (USGS) 7.5-minute quadrangle maps.

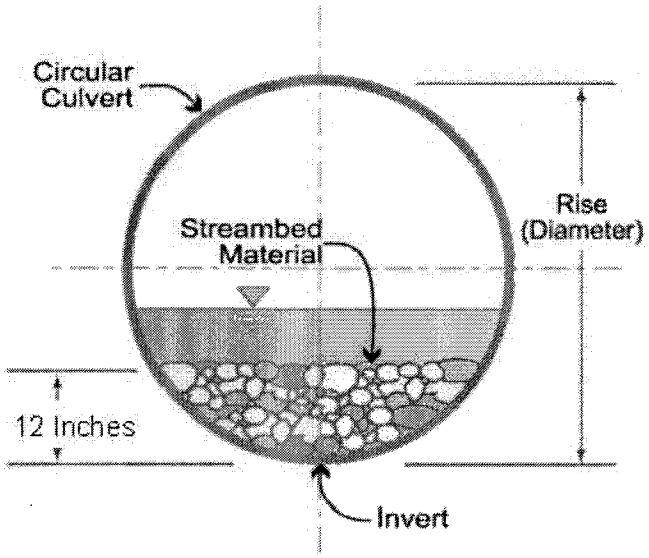

In all other counties: Culverts greater than 48 inches in diameter will be buried at least one foot below the bed of the stream. Culverts 48 inches in diameter or less shall be buried or placed on the stream bed as practicable and appropriate to maintain aquatic passage, and every effort shall be made to maintain the existing channel slope. The bottom of the culvert must be placed at a

depth below the natural stream bottom to provide for passage during drought or low flow conditions.

Culverts are to be designed and constructed in a manner that minimizes destabilization and head cutting. Destabilizing the channel and head cutting upstream should be considered and appropriate actions incorporated in the design and placement of the culvert.

A waiver from the depth specifications in this condition may be requested in writing. The waiver will be issued if it can be demonstrated that the proposal would result in the least impacts to the aquatic environment.

All counties: Culverts placed within riparian and/or riverine wetlands must be installed in a manner that does not restrict the flow and circulation patterns of waters of the United States. Culverts placed across wetland fills purely for the purposes of equalizing surface water do not have to be buried.

3.7 Notification to NCDENR Shellfish Sanitation Section

Applicants shall notify the NCDENR Shellfish Sanitation Section prior to dredging in or removing sediment from an area closed to shell fishing where the effluent may be released to an area open for shell fishing or swimming in order to avoid contamination from the disposal area and cause a temporary shellfish closure to be made. Such notification shall also be provided to the appropriate Corps of Engineers Regulatory Field Office. Any disposal of sand to the ocean beach should occur between November 1 and April 30 when recreational usage is low. Only clean sand should be used and no dredged sand from closed shell fishing areas may be used. If beach disposal were to occur at times other than stated above or if sand from a closed shell fishing area is to be used, a swimming advisory shall be posted, and a press release shall be issued by the permittee.

3.8 Preservation of Submerged Aquatic Vegetation

Adverse impacts to Submerged Aquatic Vegetation (SAV) are not authorized by any NWP within any of the twenty coastal counties defined by North Carolina's Coastal Area Management Act of 1974 (CAMA).

3.9 Sedimentation and Erosion Control Structures and Measures

3.9.1. All PCNs will identify and describe sedimentation and erosion control structures and measures proposed for placement in waters of the US. The structures and measures should be depicted on maps, surveys or drawings showing location and impacts to jurisdictional wetlands and streams.

4.5 NWP #14 - Linear Transportation Crossings

4.5.1. If appropriate, applicants shall employ natural channel design (see definition below and NOTE below) to the maximum extent practicable for stream relocations. In the event it is not appropriate to employ natural channel design, any stream relocation shall be considered a permanent impact and the applicant shall provide a mitigation plan to compensate for the loss of aquatic function associated with the proposed activity.

Natural Channel Design: A geomorphologic approach to stream restoration based on an understanding of valley type, general watershed conditions, dimension, pattern, profile, hydrology and sediment transport of natural, stable channels (reference condition) and applying this understanding to the reconstruction of a stable channel.

NOTE: Applicants should reference the "Mitigation" section of the Wilmington District web site for more information regarding appropriate stream design. For projects located within the Coastal Plain ecoregion of North Carolina and within headwater areas across the state, use the specific guidance on coastal plain stream restoration.

4.5.2. Bank-full flows (or less) shall be accommodated through maintenance of the existing bank-full channel cross sectional area. Additional culverts at such crossings shall be allowed only to receive flows exceeding bank-full.

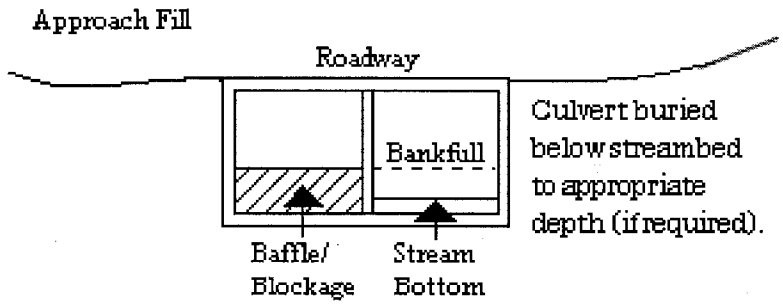

4.5.3. Where adjacent floodplain is available, flows exceeding bank-full should be accommodated by installing culverts at the floodplain elevation.

4.5.4. This NWP authorizes only upland to upland crossings and cannot be used in combination with Nationwide Permit 18 to create an upland within waters of the United States, including wetlands.

4.5.5. This NWP cannot be used for private projects located in tidal waters or tidal wetlands.

4.5.6. Excavation of existing stream channels shall be limited to the minimum necessary to construct or install the proposed culvert. The final width of the impacted streams at the culvert inlet and outlet should be no greater than the original stream width. A waiver from this condition may be requested in writing. The waiver will be issued if it can be demonstrated that it is not practicable to limit the final width of the culvert to that of the impacted stream at the culvert inlet and outlet and the proposed design would result in less impacts to the aquatic environment.

4.0 NWP #33 – Temporary Construction, Access and Dewatering

The required restoration plan must include a timetable for restoration activities.

R-31

NCDENR

North Carolina Department of Environment and Natural Resources
Division of Water Quality

Pat McCrory
Governor

Charles Wakild, P. E.
Director

John E. Skvarla, III
Secretary

March 28, 2013
Rowan County
NCDWQ Project No. 20130284
Reid to N. Kannapolis Rail
TIP Nos. P5206BCDF

APPROVAL of 401 WATER QUALITY CERTIFICATION and ISOLATED WETLANDS PERMIT Pursuant to IWGP100000 with ADDITIONAL CONDITIONS

Mr. Marc Hamel, Rail Division Engineer
NCDOT, Rail Division
1553 Mail Service Center
Raleigh, NC 27699-1553

Dear Mr. Hamel:

You have our approval, in accordance with the conditions listed below, for the following impacts for the purpose of Railroad Improvements from Reid to North Kannapolis in Rowan County:

Stream Impacts in the Yadkin Pee Dee River Basin

Section (Site)	Permanent Fill in Intermittent Stream (linear ft)	Permanent Fill in Perennial Stream (linear ft)	Temporary Fill in Perennial Stream (linear ft)	Total Stream Impact (linear ft)	Stream Impacts Requiring Mitigation (linear ft)
B (1)	42			42	
C (3-Stream SO)	11			11	
C (3-Stream SP)	217			217	217
D (1)		80	14	94	
D (2)		55	5	60	
Total	**270**	**135**	**19**	**424**	**217**

Total Stream Impact for Project: 424 linear feet.

Wetland Impacts in the Yadkin Pee Dee River Basin

Section (Site)	Fill (ac)	Fill (temporary) (ac)	Excavation (ac)	Mechanized Clearing (ac)	Hand Clearing (ac)	Area under Bridge (ac)	Total Wetland Impact (ac)
C2	.02		.01	.02			.05
Total	**.02**		**.01**	**.02**			**.05**

Total Wetland Impact for Project: 0.05 acres.

Transportation and Permitting Unit
1650 Mail Service Center, Raleigh, North Carolina 27699-1617
Location: 512 N. Salisbury St. Raleigh, North Carolina 27604
Phone: 919-807-6300 \ FAX: 919-807-6492
Internet: www.ncwaterquality.org

An Equal Opportunity \ Affirmative Action Employer

One NorthCarolina Naturally

R-32

Isolated Wetland Impacts in the Yadkin Pee Dee River Basin

Site	Fill (ac)	Fill (temporary) (ac)	Excavation (ac)	Mechanized Clearing (ac)	Hand Clearing (ac)	Total Wetland Impact (ac)
B(1)	.02			.02		.04
B(2)	.03			.02		.05
C(1-WO)	.04					.04
C(1-WR)			.01	.01		.02
Total	**.09**		**.01**	**.05**		**.15**

Total Isolated Wetland Impact for Project: 0.15 acres.

The project shall be constructed in accordance with your application dated received March 18, 2013 with updated Stormwater Management Plans received March 28, 2013. After reviewing your application, we have decided that these impacts are covered by Isolated Wetlands Permit no. IWGP100000, and by General Water Quality Certification Numbers 3886 and 3893. These General Certifications certification correspond to the Nationwide Permit 14 and Nationwide Permit 33 issued by the Corps of Engineers. In addition, you should acquire any other federal, state or local permits before you proceed with your project including (but not limited to) Sediment and Erosion Control, Non-Discharge and Water Supply Watershed regulations. This approval will expire with the accompanying 404 permit.

This approval is valid solely for the purpose and design described in your application (unless modified below). Should your project change, you must notify the NCDWQ and submit a new application. If the property is sold, the new owner must be given a copy of this Certification and approval letter, and is thereby responsible for complying with all the conditions. If total wetland fills for this project (now or in the future) exceed one acre, or of total impacts to streams (now or in the future) exceed 150 linear feet, compensatory mitigation may be required as described in 15A NCAC 2H .0506 (h) (6) and (7). For this approval to remain valid, you must adhere to the conditions listed in the attached certification(s) and any additional conditions listed below.

Condition(s) of Certification:

Project Specific Conditions

1. Post-construction stormwater shall be designed as approved in updated stormwater management plans dated received March 28, 2013. If any changes are made to the post-construction stormwater design, the Division of Water Quality shall be contacted for approval of the changes.
2. The NCDOT Division Environmental Officer or Environmental Assistant will conduct a pre-construction meeting with all appropriate staff to ensure that the project supervisor and essential staff understand the potential issues with stream and pipe alignment at the permitted site. NCDWQ staff shall be invited to the pre-construction meeting.
3. Compensatory mitigation for 217 linear feet of impact to streams is required. We understand that you have chosen to perform compensatory mitigation for impacts to streams through the North Carolina Ecosystem Enhancement Program (EEP), and that the EEP has agreed to implement the mitigation for the project. EEP has indicated in a letter dated March 12, 2013 that they will assume responsibility for satisfying the federal Clean Water Act compensatory mitigation requirements for the above-referenced project, in accordance with the EEP Mitigation Banking Instrument signed July 28, 2010.

* 4. Two copies of the final construction drawings shall be furnished to NCDWQ Central Office prior to the pre-construction meeting. The permittee shall provide written verification that the final construction drawings comply with the permit drawings contained in the permit application dated received March 18, 201 . Any deviations from the approved drawings are not authorized unless approved by the NC Division of Water Quality.

5. Channel relocations shall be completed and stabilized, prior to diverting water into the new channel. Stream banks shall be matted with coir-fiber matting. Vegetation used for bank stabilization shall be limited to native riparian vegetation, and should include establishment of a vegetated buffer on both sides of the relocated channel to the maximum extent practical. Also, rip-rap may be allowed if it is necessary to maintain the physical integrity of the stream, but the applicant must provide written justification and any calculations used

to determine the extent of rip-rap coverage requested. Once the stream has been turned into the new channel, it may be necessary to relocate stranded fish to the new channel to prevent fish kills.

6. Strict adherence to the most recent version of NCDOT's Best Management Practices For Bridge Demolition and Removal approved by the US Army Corps of Engineers is a condition of the 401 Water Quality Certification.
7. The outside buffer, wetland or water boundary located within the construction corridor approved by this authorization shall be clearly marked by highly visible fencing prior to any land disturbing activities. Impacts to areas within the fencing are prohibited unless otherwise authorized by this certification.
8. For the 19 linear feet of streams being impacted due to site dewatering activities, the site shall be graded to its preconstruction contours and revegetated with appropriate native species.
9. Pipes and culverts used exclusively to maintain equilibrium in wetlands, where aquatic life passage is not a concern, shall not be buried. These pipes shall be installed at natural ground elevation.

General Conditions

1. During the construction of the project, no staging of equipment of any kind is permitted in waters of the U.S., or protected riparian buffers.
2. The dimension, pattern and profile of the stream above and below the crossing shall not be modified. Disturbed floodplains and streams shall be restored to natural geomorphic conditions.
3. The use of rip-rap above the Normal High Water Mark shall be minimized. Any rip-rap placed for stream stabilization shall be placed in stream channels in such a manner that it does not impede aquatic life passage.

* 4. The Permittee shall ensure that the final design drawings adhere to the permit and to the permit drawings submitted for approval.

5. Heavy equipment shall be operated from the banks rather than in the stream channel in order to minimize sedimentation and reduce the introduction of other pollutants into the stream.
6. All mechanized equipment operated near surface waters must be regularly inspected and maintained to prevent contamination of stream waters from fuels, lubricants, hydraulic fluids, or other toxic materials.
7. No rock, sand or other materials shall be dredged from the stream channel except where authorized by this certification.
8. Discharging hydroseed mixtures and washing out hydroseeders and other equipment in or adjacent to surface waters is prohibited.
9. All fill slopes located in jurisdictional wetlands shall be placed at slopes no flatter than 3:1, unless otherwise authorized by this certification..
10. A copy of this Water Quality Certification shall be maintained on the construction site at all times. In addition, the Water Quality Certification and all subsequent modifications, if any, shall be maintained with the Division Engineer and the on-site project manager.
11. The Permittee shall report any violations of this certification to the Division of Water Quality within 24 hours of discovery.
12. Native riparian vegetation must be reestablished in the riparian areas within the construction limits of the project by the end of the growing season following completion of construction.

If you wish to contest any statement in the attached Certification you must file a petition for an administrative hearing. You may obtain the petition form from the office of Administrative hearings. You must file the petition with the office of Administrative Hearings within sixty (60) days of receipt of this notice. A petition is considered filed when it is received in the office of Administrative Hearings during normal office hours. The Office of Administrative Hearings accepts filings Monday through Friday between the hours of 8:00am and 5:00pm, except for official state holidays. The original and one (1) copy of the petition must be filed with the Office of Administrative Hearings.

The petition may be faxed-provided the original and one copy of the document is received by the Office of Administrative Hearings within five (5) business days following the faxed transmission.
The mailing address for the Office of Administrative Hearings is:

Office of Administrative Hearings
6714 Mail Service Center
Raleigh, NC 27699-6714
Telephone: (919)-431-3000, Facsimile: (919)-431-3100

A copy of the petition must also be served on DENR as follows:

Mr. Lacy Presnell, General Counsel
Department of Environment and Natural Resources
1601 Mail Service Center

This letter completes the review of the Division of Water Quality under Section 401 of the Clean Water Act. If you have any questions, please contact Amy Euliss at (336) 771-4959 or amy.euliss@ncdenr.gov.

Sincerely,

Charles Wakild
Director

Attachments: General Certification nos. 3886 and 3893 and Isolated Wetlands Permit IWGP100000 (permittee only)

cc: Scott Davis, Axiom Environmental, inc. (electronic copy only)
Kent Boyer, Division 9 Environmental Officer (electronic copy only)
John Thomas, US Army Corps of Engineers, Raleigh Field Office (electronic copy only)
Marla Chambers, NC Wildlife Resources Commission (electronic copy only)
Beth Harmon, Ecosystem Enhancement Program (electronic copy only)
Transportation Permitting Unit, (electronic copy only)
File Copy

R-35

NCDENR

North Carolina Department of Environment and Natural Resources

Division of Water Quality

Pat McCrory
Governor

Charles Wakild, P. E.
Director

John E. Skvarla, III
Secretary

NCDWQ Project No.: _____ **County:** _____

Applicant: _____

Project Name: _____

Date of Issuance of 401 Water Quality Certification: _____

Certificate of Completion

Upon completion of all work approved within the 401 Water Quality Certification or applicable Buffer Rules, and any subsequent modifications, the applicant is required to return this certificate to the 401 Transportation Permitting Unit, North Carolina Division of Water Quality, 1650 Mail Service Center, Raleigh, NC, 27699-1650. This form may be returned to NCDWQ by the applicant, the applicant's authorized agent, **or** the project engineer. It is not necessary to send certificates from all of these.

Applicant's Certification

I, _____, hereby state that, to the best of my abilities, due care and diligence was used in the observation of the construction such that the construction was observed to be built within substantial compliance and intent of the 401 Water Quality Certification and Buffer Rules, the approved plans and specifications, and other supporting materials.

Signature: _____ Date: _____

Agent's Certification

I, _____, hereby state that, to the best of my abilities, due care and diligence was used in the observation of the construction such that the construction was observed to be built within substantial compliance and intent of the 401 Water Quality Certification and Buffer Rules, the approved plans and specifications, and other supporting materials.

Signature: _____ Date: _____

Engineer's Certification

_____ Partial _____ Final

I, _____, as a duly registered Professional Engineer in the State of North Carolina, having been authorized to observe (periodically, weekly, full time) the construction of the project for the Permittee hereby state that, to the best of my abilities, due care and diligence was used in the observation of the construction such that the construction was observed to be built within substantial compliance and intent of the 401 Water Quality Certification and Buffer Rules, the approved plans and specifications, and other supporting materials.

Signature _____ Registration No. _____

Date _____

Transportation and Permitting Unit
1650 Mail Service Center, Raleigh, North Carolina 27699-1617
Location: 512 N. Salisbury St. Raleigh, North Carolina 27604
Phone: 919-807-6300 \ FAX: 919-807-6492
Internet: www.ncwaterquality.org

One NorthCarolina Naturally

An Equal Opportunity \ Affirmative Action Employer

R-36

Water Quality Certification No. 3886

GENERAL CERTIFICATION FOR PROJECTS ELIGIBLE FOR U.S. ARMY CORPS OF ENGINEERS NATIONWIDE PERMIT NUMBER 14 (LINEAR TRANSPORTATION PROJECTS) AND REGIONAL GENERAL PERMIT 198200031 (WORK ASSOCIATED WITH BRIDGE CONSTRUCTION, MAINTENANCE OR REPAIR CONDUCTED BY NCDOT OR OTHER GOVERNMENT AGENCIES)
AND RIPARIAN AREA PROTECTION RULES (BUFFER RULES)

Water Quality Certification Number 3886 is issued in conformity with the requirements of Section 401, Public Laws 92-500 and 95-217 of the United States and subject to the North Carolina Division of Water Quality (DWQ) Regulations in 15A NCAC 02H .0500 and 15A NCAC 02B .0200 for the discharge of fill material to waters and adjacent wetland areas or to wetland areas that are not a part of the surface tributary system to interstate waters or navigable waters of the United States (as described in 33 CFR 330 Appendix A (B) (14) of the Corps of Engineers regulations (Nationwide Permit No. 14 and Regional General Permit 198200031) and for the Riparian Area Protection Rules (Buffer Rules) in 15A NCAC 02B .0200.

The State of North Carolina certifies that the specified category of activity will not violate applicable portions of Sections 301, 302, 303, 306 and 307 of the Public Laws 92-500 and 95-217 if conducted in accordance with the conditions hereinafter set forth.

* Any proposed fill or modification of wetlands and/or waters, including streams, under this General Certification requires application to, and written approval from the Division of Water Quality except for the single family lot exemption described below.

Activities meeting any one (1) of the following thresholds or circumstances require *written approval* for a 401 Water Quality Certification from the Division of Water Quality (the "Division"):

a) Any temporary or permanent impacts to wetlands, open waters and/or streams, including stream relocations, except for construction of a driveway to a single family lot as long as the driveway involves *less than 25 feet* of temporary and/or permanent stream channel impacts, including any in-stream stabilization needed for the crossing; or
b) Any impact associated with a high density project (as defined in Item (A)(iv) of the ***401 Stormwater Requirements***) that is not subject to either a state stormwater program (such as, but not limited to, Coastal Counties, HQW, ORW or state-implemented Phase II NPDES) or a certified community's stormwater program; or
c) Any impact associated with a Notice of Violation or an enforcement action for violation(s) of DWQ Wetland Rules (15A NCAC 02H .0500), Isolated Wetland Rules (15A NCAC 02H .1300), DWQ Surface Water or Wetland Standards, or Riparian Buffer Rules (15A NCAC 02B .0200); or
* d) Any impacts to streams and/or buffers in the Neuse, Tar-Pamlico, or Catawba River Basins or in the Randleman, Jordan or Goose Creek Watersheds (or any other basin or watershed with Riparian Area Protection Rules [Buffer Rules] in effect at the time of application) *unless* the activities are listed as "EXEMPT" from these rules or a Buffer Authorization Certificate is issued through N.C. Division of Coastal Management (DCM) delegation for "ALLOWABLE" activities.

* In accordance with North Carolina General Statute 143-215.3D(e), written approval for a 401 Water Quality General Certification must include the appropriate fee. If a project also requires a CAMA Permit, then one payment to both agencies shall be submitted and will be the higher of the two fees.

Activities included in this General Certification that do not meet one of the thresholds listed above do not require written approval from the Division as long as they comply with

Water Quality Certification No. 3886

the Conditions of Certification listed below. If any of these Conditions cannot be met, then written approval from the Division is required.

Conditions of Certification:

1. No Impacts Beyond those Authorized in the Written Approval or Beyond the Threshold of Use of this Certification

   No waste, spoil, solids, or fill of any kind shall occur in wetlands, waters, or riparian areas beyond the footprint of the impacts depicted in the Pre-Construction Notification, as authorized in the written approval from the Division or beyond the thresholds established for use of this Certification without written authorization, including incidental impacts. All construction activities, including the design, installation, operation, and maintenance of sediment and erosion control Best Management Practices shall be performed so that no violations of state water quality standards, statutes, or rules occur. Approved plans and specifications for this project are incorporated by reference and are enforceable parts of this permit.

2. Standard Erosion and Sediment Control Practices

   Erosion and sediment control practices must be in full compliance with all specifications governing the proper design, installation and operation and maintenance of such Best Management Practices and if applicable, comply with the specific conditions and requirements of the NPDES Construction Stormwater Permit issued to the site:

   a. Design, installation, operation, and maintenance of the sediment and erosion control measures must be such that they equal or exceed the requirements specified in the most recent version of the *North Carolina Sediment and Erosion Control Manual*. The devices shall be maintained on all construction sites, borrow sites, and waste pile (spoil) projects, including contractor-owned or leased borrow pits associated with the project.

   b. For borrow pit sites, the erosion and sediment control measures must be designed, installed, operated, and maintained in accordance with the most recent version of the *North Carolina Surface Mining Manual*.

   c. Reclamation measures and implementation must comply with the reclamation in accordance with the requirements of the Sedimentation Pollution Control Act and the Mining Act of 1971.

   d. Sufficient materials required for stabilization and/or repair of erosion control measures and stormwater routing and treatment shall be on site at all times.

   e. If the project occurs in waters or watersheds classified as Primary Nursery Areas (PNAs), SA, WS-I, WS-II, High Quality (HQW), or Outstanding Resource (ORW) waters, then the sedimentation and erosion control designs must comply with the requirements set forth in 15A NCAC 04B .0124, *Design Standards in Sensitive Watersheds*.

Water Quality Certification No. 3886

3. No Sediment and Erosion Control Measures in Wetlands or Waters

   Sediment and erosion control measures shall not be placed in wetlands or waters. Exceptions to this condition require application submittal to and written approval by the Division. If placement of sediment and erosion control devices in wetlands and waters is unavoidable, then design and placement of temporary erosion control measures shall not be conducted in a manner that may result in dis-equilibrium of wetlands, stream beds, or banks, adjacent to or upstream and downstream of the above structures. All sediment and erosion control devices shall be removed and the natural grade restored within two (2) months of the date that the Division of Land Resources (DLR) or locally delegated program has released the specific area within the project.

4. Construction Stormwater Permit NCG010000

   An NPDES Construction Stormwater Permit is required for construction projects that disturb one (1) or more acres of land. This Permit allows stormwater to be discharged during land disturbing construction activities as stipulated in the conditions of the permit. If your project is covered by this permit, full compliance with permit conditions including the erosion & sedimentation control plan, inspections and maintenance, self-monitoring, record keeping and reporting requirements is required. A copy of the general permit (NCG010000), inspection log sheets, and other information may be found at http://portal.ncdenr.org/web/wq/ws/su/npdessw#tab-w .

   The North Carolina Department of Transportation (NCDOT) shall be required to be in full compliance with the conditions related to construction activities within the most recent version of their individual NPDES (NCS000250) stormwater permit.

5. Construction Moratoriums and Coordination

   If activities must occur during periods of high biological activity (i.e. sea turtle nesting, fish spawning, or bird nesting), then biological monitoring may be required at the request of other state or federal agencies and coordinated with these activities.

   All moratoriums on construction activities established by the NC Wildlife Resources Commission (WRC), US Fish and Wildlife Service (USFWS), NC Division of Marine Fisheries (DMF), or National Marine Fisheries Service (NMFS) to lessen impacts on trout, anadromous fish, larval/post-larval fishes and crustaceans, or other aquatic species of concern shall be implemented. Exceptions to this condition require written approval by the resource agency responsible for the given moratorium.

   Work within the twenty-five (25) designated trout counties or identified state or federal endangered or threatened species habitat shall be coordinated with the appropriate WRC, USFWS, NMFS, and/or DMF personnel.

6. Work in the Dry

   All work in or adjacent to stream waters shall be conducted so that the flowing stream does not come in contact with the disturbed area. Approved best management practices from the most current version of the NC Sediment and Erosion Control Manual, or the NC DOT Construction and Maintenance Activities Manual, such as sandbags, rock berms, cofferdams, and other diversion structures shall be used to minimize excavation in flowing water. Exceptions to this condition require application submittal to and written approval by the Division.

Water Quality Certification No. 3886

7. Riparian Area Protection (Buffer) Rules

   Activities located in the protected riparian areas (whether jurisdictional wetlands or not), within the Neuse, Tar-Pamlico, or Catawba River Basins or in the Randleman, Jordan, or Goose Creek Watersheds (or any other basin or watershed with buffer rules) shall be limited to "uses" identified within and constructed in accordance with 15A NCAC 02B .0233, .0259, .0243, .0250, .0267 and .0605, and shall be located, designed, constructed, and maintained to have minimal disturbance to protect water quality to the maximum extent practicable through the use of best management practices. All buffer rule requirements, including diffuse flow requirements, must be met.

8. If concrete is used during the construction, then all necessary measures shall be taken to prevent direct contact between uncured or curing concrete and waters of the state. Water that inadvertently contacts uncured concrete shall not be discharged to waters of the state due to the potential for elevated pH and possible aquatic life/ fish kills.

9. Bridge deck drains shall not discharge directly into the stream. Stormwater shall be directed across the bridge and pre-treated through site-appropriate means (grassed swales, pre-formed scour holes, vegetated buffers, etc.) before entering the stream. Please refer to the most current version of *Stormwater Best Management Practices*. Exceptions to this condition require written approval by the Division.

10. Compensatory Mitigation

    In accordance with 15A NCAC 02H .0506 (h), compensatory mitigation may be required for losses of equal to or greater than 150 linear feet of streams (intermittent and perennial) and/or equal to or greater than one (1) acre of wetlands. For linear public transportation projects, impacts equal to or exceeding 150 linear feet per stream shall require mitigation.

    Buffer mitigation may be required for any project with Buffer Rules in effect at the time of application for activities classified as "Allowable with Mitigation" or "Prohibited" within the Table of Uses.

    A determination of buffer, wetland, and stream mitigation requirements shall be made for any General Water Quality Certification for this Nationwide and/or Regional General Permit. Design and monitoring protocols shall follow the US Army Corps of Engineers Wilmington District *Stream Mitigation Guidelines* (April 2003) or its subsequent updates. Compensatory mitigation plans shall be submitted to the Division for written approval as required in those protocols. The mitigation plan must be implemented and/or constructed before any impacts occur on site. Alternatively, the Division will accept payment into an in-lieu fee program or a mitigation bank. In these cases, proof of payment shall be provided to the Division before any impacts occur on site.

11. Relocated stream designs should include the same dimensions, patterns, and profiles as the existing channel (or a stable reference reach if the existing channel is unstable), to the maximum extent practical. The new channel should be constructed in the dry and water shall not be turned into the new channel until the banks are stabilized. Vegetation used for bank stabilization shall be limited to native woody species, and should include establishment of a 30-foot wide wooded and an adjacent 20-foot wide vegetated buffer on both sides of the relocated channel to the maximum extent practical. A transitional phase incorporating appropriate erosion control matting materials and seedling establishment is allowable, however matting that incorporates plastic mesh and/or plastic twine shall not be used in wetlands, riparian buffers or floodplains as recommended by the North Carolina Sediment and Erosion Control Manual. Rip-rap, A-Jacks, concrete, gabions or other hard structures may be allowed if it is necessary to maintain the physical integrity of the stream; however, the applicant must provide written justification and any calculations used to determine the extent of rip-rap coverage. Please note that if the stream relocation is conducted as a stream restoration as defined in the US Army Corps of Engineers Wilmington District, April 2003 *Stream Mitigation Guidelines* (or its subsequent updates), the restored length may be used as compensatory mitigation for the impacts resulting from the relocation.

12. Stormwater Management Plan Requirements

    All applications shall address stormwater management throughout the entire project area per the 401 Stormwater Requirements, referenced herein as "**Attachment A**" at the end of this Certification.

13. Placement of Culverts and Other Structures in Waters and Wetlands

    Culverts required for this project shall be designed and installed in such a manner that the original stream profiles are not altered and allow for aquatic life movement during low flows. Existing stream dimensions (including the cross section dimensions, pattern, and longitudinal profile) must be maintained above and below locations of each culvert.

    Placement of culverts and other structures in waters and streams must be below the elevation of the streambed by one foot for all culverts with a diameter greater than 48 inches, and 20 percent of the culvert diameter for culverts having a diameter less than or equal to 48 inches, to allow low flow passage of water and aquatic life.

    When topographic constraints indicate culvert slopes of greater than 5%, culvert burial is not required, provided that all alternative options for flattening the slope have been investigated and aquatic life movement/ connectivity has been provided when possible (rock ladders, crossvanes, etc). Notification to the Division including supporting documentation to include a location map of the culvert, culvert profile drawings, and slope calculations shall be provided to the Division 60 days prior to the installation of the culvert.

    When bedrock is present in culvert locations, culvert burial is not required provided that there is sufficient documentation of the presence of bedrock. Notification to the Division including supporting documentation such as, but not limited to, a location map of the culvert, geotechnical reports, photographs, etc shall be provided to the Division a minimum of 60 days prior to the installation of the culvert. If bedrock is discovered during construction, then the Division shall be notified by phone or email within 24 hours of discovery.

    If other site-specific topographic constraints preclude the ability to bury the culverts as described above and/or it can be demonstrated that burying the culvert would result in destabilization of the channel, then exceptions to this condition require application submittal to, and written approval by, the Division of Water Quality, regardless of the total impacts to streams or wetlands from the project.

Water Quality Certification No. 3886

Installation of culverts in wetlands must ensure continuity of water movement and be designed to adequately accommodate high water or flood conditions. Additionally, when roadways, causeways, or other fill projects are constructed across FEMA-designated floodways or wetlands, openings such as culverts or bridges must be provided to maintain the natural hydrology of the system as well as prevent constriction of the floodway that may result in destabilization of streams or wetlands.

The establishment of native, woody vegetation and other soft stream bank stabilization techniques must be used where practicable instead of riprap or other bank hardening methods.

14. All temporary fill and culverts shall be removed and the impacted area returned to natural conditions within 60 days of the determination that the temporary impact is no longer necessary. The impacted areas shall be restored to original grade, including each stream's original cross sectional dimensions, plan form pattern, and longitudinal bed and bed profile, and the various sites shall be stabilized with natural woody vegetation (except for the approved maintenance areas) and restored to prevent erosion.

15. All temporary pipes/ culverts/ riprap pads etc, shall be installed in all streams as outlined in the most recent edition of the *North Carolina Sediment and Erosion Control Planning and Design Manual* or the *North Carolina Surface Mining Manual* so as not to restrict stream flow or cause dis-equilibrium during use of this General Certification.

16. Any riprap required for proper culvert placement, stream stabilization, or restoration of temporarily disturbed areas shall be restricted to the area directly impacted by the approved construction activity. All rip-rap shall buried and/or "keyed in" such that the original stream elevation and streambank contours are restored and maintained. Placement of rip-rap or other approved materials shall not result in de-stabilization of the stream bed or banks upstream or downstream of the area.

17. Any rip-rap used for stream stabilization shall be of a size and density so as not to be able to be carried off by wave, current action, or stream flows and consist of clean rock or masonry material free of debris or toxic pollutants. Rip-rap shall not be installed in the streambed except in specific areas required for velocity control and to ensure structural integrity of bank stabilization measures.

18. A one-time application of fertilizer to re-establish vegetation is allowed in disturbed areas including riparian buffers, but is restricted to no closer than 10 feet from top of bank of streams. Any fertilizer application must comply with all other Federal, State and Local regulations.

19. If this Water Quality Certification is used to access building sites, then all lots owned by the applicant must be buildable without additional impacts to streams or wetlands. The applicant is required to provide evidence that the lots are buildable without requiring additional impacts to wetlands, waters, or buffers if required to do so in writing by the Division. For road construction purposes, this Certification shall only be utilized from natural high ground to natural high ground.

20. Deed notifications or similar mechanisms shall be placed on all retained jurisdictional wetlands, waters, and protective buffers within the project boundaries in order to assure compliance for future wetland, water, and buffer impact. These mechanisms shall be put in place at the time of recording of the property or of individual lots, whichever is appropriate. A sample deed notification can be downloaded from the 401/Wetlands Unit web site at http://portal.ncdenr.org/web/wq/swp/ws/401/certsandpermits/apply/forms. The text of the sample deed notification may be modified as appropriate to suit to a specific project. Documentation of deed notifications shall be provided to the Division upon request.

Water Quality Certification No. 3886

* 21. If an environmental document is required under the National or State Environmental Policy Act (NEPA or SEPA), then this General Certification is not valid until a Finding of No Significant Impact (FONSI) or Record of Decision (ROD) is issued by the State Clearinghouse.

22. In the twenty (20) coastal counties, the appropriate DWQ Regional Office must be contacted to determine if Coastal Stormwater Regulations will be required.

23. This General Certification does not relieve the applicant of the responsibility to obtain all other required Federal, State, or Local approvals.

24. The applicant/permittee and their authorized agents shall conduct all activities in a manner consistent with State water quality standards (including any requirements resulting from compliance with §303(d) of the Clean Water Act), and any other appropriate requirements of State and Federal Law. If the Division determines that such standards or laws are not being met, including failure to sustain a designated or achieved use, or that State or Federal law is being violated, or that further conditions are necessary to assure compliance, then the Division may reevaluate and modify this General Water Quality Certification.

* 25. When written authorization is required for use of this certification, upon completion of all permitted impacts included within the approval and any subsequent modifications, the applicant shall be required to return the certificate of completion attached to the approval. One copy of the certificate shall be sent to the DWQ Central Office in Raleigh at 1650 Mail Service Center, Raleigh, NC, 27699-1650.

26. Additional site-specific conditions, including monitoring and/or modeling requirements, may be added to the written approval letter for projects proposed under this Water Quality Certification in order to ensure compliance with all applicable water quality and effluent standards.

27. This certification grants permission to the director, an authorized representative of the Director, or DENR staff, upon the presentation of proper credentials, to enter the property during normal business hours.

This General Certification shall expire on the same day as the expiration date of the corresponding Nationwide and/or Regional General Permit. The conditions in effect on the date of issuance of Certification for a specific project shall remain in effect for the life of the project, regardless of the expiration date of this Certification.

Non-compliance with or violation of the conditions herein set forth by a specific project may result in revocation of this General Certification for the project and may also result in criminal and/or civil penalties.

The Director of the North Carolina Division of Water Quality may require submission of a formal application for Individual Certification for any project in this category of activity if it is determined that the project is likely to have a significant adverse effect upon water quality, including state or federally listed endangered or threatened aquatic species, or degrade the waters so that existing uses of the wetland or downstream waters are precluded.

R-43

Water Quality Certification No. 3886

Public hearings may be held for specific applications or group of applications prior to a Certification decision if deemed in the public's best interest by the Director of the North Carolina Division of Water Quality.

Effective date: March 19, 2012

DIVISION OF WATER QUALITY

By

Matt Matson for

Charles Wakild, P.E.

Director

History Note: Water Quality Certification (WQC) Number 3886 issued March 12, 2012 replaces WQC Number 3820 issued April 6, 2010; WQC Number 3627 issued March 2007; WQC Number 3404 issued March 2003; WQC Number 3375 issued March 18, 2002; WQC Number 3289 issued June 1, 2000; WQC Number 3103 issued February 11, 1997; WQC Number 2732 issued May 1, 1992; WQC Number 2666 issued January 21, 1992; WQC Number 2177 issued November 5, 1987. This WQC is rescinded when the Corps of Engineers reauthorizes any of the corresponding Nationwide and/or Regional General Permits or when deemed appropriate by the Director of the Division of Water Quality.

R-44

Water Quality Certification No. 3886

Attachment A: 401 Stormwater Requirements

The requirements listed below shall be implemented in order to comply with Condition 12 of this General Certification. For the North Carolina Department of Transportation, compliance with NCDOT's Individual NPDES permit NCS000250 shall serve to satisfy the 401 and Isolated Wetland Stormwater Requirements.[1]

A. **Design and Implementation Requirements.** All projects, regardless of project area, amount of built-upon area or amount of jurisdictional impact, shall meet the following stormwater design requirements:

i. **Non-Erosive Discharge to Streams and Wetlands.** Stormwater conveyances that discharge to streams and wetlands must discharge at a non-erosive velocity prior to entering the stream or wetland during the peak flow from the ten-year storm.[2]

ii. **Vegetated Setbacks.** A 30-foot wide vegetated setback must be maintained adjacent to streams, rivers and tidal waters in areas that are not subject to a state Riparian Area Protection Rule or other more stringent vegetated setback requirements. The width of the setback shall be measured horizontally from the normal pool elevation of impounded structures, the top-of-bank of streams and rivers, and the mean high waterline of tidal waters, perpendicular to shoreline. Vegetated setback and filters required by state rules or local governments may be met concurrently with this requirement and may contain coastal, isolated or 404 jurisdictional wetlands. Non-jurisdictional portions of the vegetated setback may be cleared and graded, but must be planted with and maintained in grass or other vegetative or plant material.[3]

iii. **Construction and Operation.** The stormwater management plan must be constructed and operational before any permanent building or other structure is occupied or utilized at the site. The stormwater management plan, including drainage patterns, must be maintained in perpetuity.[4]

iv. **Coordination with Other Stormwater Programs.** Projects that are subject to another Division of Water Quality (DWQ) stormwater program, including (but not limited to) the 20 Coastal Counties, HQW, ORW or state-implemented Phase II NPDES, or a Certified Community's stormwater management program, must be constructed and maintained in compliance with the approved stormwater management plan.[5]

v. **Stormwater Design Requirements for Projects Not Covered Under Item (iv).** Projects that are not subject to another DWQ stormwater program or a Certified Community's stormwater program shall meet all of the following requirements:

a. **Low Density.** A site is low density if all the following requirements are met:

1. The development has a built upon area of twenty-four percent (24%) or less, considering both current and future development. When determining the amount of built upon area, coastal wetlands shall be included; however, ponds, lakes and rivers as specified in North Carolina's Schedule of Classifications shall be excluded. If a portion of project has a density greater than 24%, the higher density area must be located in an upland area and away from surface waters and drainageways to the maximum extent practicable.[6]

2. All stormwater runoff from the built upon areas is transported primarily via vegetated conveyances designed in accordance with the most recent version of the *NC DWQ Stormwater Best Management Practices Manual.* Alternative designs may be approved if the applicant can show that the design provides

equal or better water quality protection than the practices specified in the manual. The project must not include a stormwater collection system (such as piped conveyances) as defined in 15A NCAC 02B .0202(60).[7]

b. **High Density.** Projects that do not meet the Low Density requirements shall meet the following requirements:

1. Stormwater runoff from the entire site must be treated by structural stormwater controls (BMPs) that are designed to remove eighty-five percent (85%) of the average annual amount of Total Suspended Solids (TSS). Stormwater runoff that drains directly to Nutrient Sensitive Waters (NSW) must also be treated to remove thirty percent (30%) of Total Nitrogen (TN) and Total Phosphorus (TP).[8]

2. All BMPs must be designed in accordance with the version of the *NC DWQ Stormwater Best Management Practices Manual* that is in place on the date of stormwater management plan submittal. Alternative designs may be approved if the applicant can show that the design provides equal or better water quality protection than the practices specified in the manual.[9]

3. DWQ may add specific stormwater management requirements on a case-by-case basis in order to ensure that a proposed activity will not violate water quality standards.[10]

4. DWQ may approve Low Impact Developments (LIDs) that meet the guidance set forth in the *Low Impact Development: A Guidebook for North Carolina.*[11]

5. Proposed new development undertaken by a local government solely as a public road project shall follow the requirements of the NC DOT BMP Toolbox rather than Items (1)-(4) above.[12]

B. **Submittal Requirements.** The submittal requirements listed below apply only to projects that require written authorization as indicated in the applicable General Certification as well as projects that require an Isolated Wetlands Permit. **Any required documentation shall be sent to the Wetlands, Buffers and Stormwater Compliance and Permitting Unit at 1650 Mail Service Center, Raleigh, NC 27699-1650.**

i. **Projects that are Subject to Another DWQ Stormwater Program:** If the project is subject to another DWQ stormwater program, such as the 20 Coastal Counties, HQW, ORW or state-implemented Phase II NPDES, then the applicant shall submit a copy of the stormwater approval letter before any impacts occur on site.[13]

ii. **Projects that are Subject to a Certified Community's Stormwater Program.** If the project is subject to a certified local government's stormwater program, then the applicant shall submit one set of approved stormwater management plan details and calculations with documentation of the local government's approval before any impacts occur on site.[5]

iii. **Projects Not Covered Under Items (i) or (ii).** If the project is not subject to another DWQ Stormwater Program or a Certified Community's stormwater program, then it shall be reviewed and approved by the DWQ through the Water Quality Certification authorization process.

a. **Low Density.** For low density projects, the applicant shall submit two copies of the DWQ Low Density Supplement Form with all required items.[13]

b. **High Density.** For high density projects, the applicant shall submit two copies of a DWQ BMP Supplement Form and all required items at the specified scales for each BMP that is proposed.[13]

iv. **Phasing.** Stormwater management plans may be phased on a case-by-case basis, with the submittal of a final stormwater management plan per Items (i)-(iii) above required for the current phase and a conceptual stormwater management plan for the future phase(s). The stormwater management plan for each future phase must be approved by the appropriate entity before construction of that phase is commenced. The approved stormwater management plan for each future phase must be constructed and operational before any permanent building or other structure associated with that phase is occupied.[14]

v. **Stormwater Management Plan Modifications.** The stormwater management plan may not be modified without prior written authorization from the entity that approved the plan. If the project is within a Certified Community, then the applicant shall submit one set of approved stormwater management plan details and calculations with documentation of the local government's approval for record-keeping purposes. If the project is subject to DWQ review, then the applicant shall submit two copies of the appropriate Supplement Forms per Item (iii) above for any BMPs that have been modified for DWQ's review and approval.[15]

---

1 The stormwater requirement for 401 applications is codified in 15A NCAC 02H .0506(b)(5) and (c)(5).

2 Non erosive discharge rates are required in SL 2008-211§2(b)(1). The 10-year design storm standard is codified in 15A NCAC 02H .1008(f)(2) and .1008(g)(1).

3 30-foot vegetated setbacks are required in SL 2006-246§9(d), SL 2008-211§2(b), 15A NCAC 02H .1006(2)(c) and .1007(1)(a).

4 Construction and maintenance of the stormwater plan is necessary to satisfy 15A NCAC 02H .0506(b)(5).

5 Conveys application procedure to streamline the permitting process and reduce any unnecessary duplication in the review of stormwater management plans.

6 Low density built upon area thresholds are set in SL 2006-246§9(c) and SL 2008-211§2(b).

7 The requirement for low density development to use vegetated conveyances is codified in SL 2006-246§9(c), SL 2008-211§2(b), 15A NCAC 02H .1006(2)(b) and .1007(1)(a). The Stormwater BMP Manual is also referenced in 15A NCAC 02B .0265(3)(a) and .0277(4)(e).

8 85% TSS removal is required in SL 2006-246§9(d), SL 2008-211§2(b), 15A NCAC 02H .1006(2)(c), 15A NCAC 02H .1007(1)(a). The 30% TN and TP removal requirements for NSW waters are set forth in 15A NCAC 02B .0232, 15A NCAC 02B .0257(a)(1), 15A NCAC 02B .0265(3)(a) and 15A NCAC 02B .0277(4).

9 The Stormwater BMP Manual is also referenced in 15A NCAC 02B .0265(3)(a) and .0277(4)(e).

10 The requirement for DWQ to ensure that water quality standards are protected before issuing a 401 certification is codified in 15A NCAC 02H .0506.

11 The LID Toolbox is also referenced in 15A NCAC 02B .0277(4)(g).

12 The term "public road project" is defined in15A NCAC 02B .0265(3)(a).

13 Conveys application procedure to streamline the permitting process.

14 Phased development is addressed as a "common plan of development" in 15A NCAC 02H .1003(3).

15 Procedures for modifying stormwater plans are set forth in 15A NCAC 02H .1011.

R-47

Water Quality Certification No. 3893

GENERAL CERTIFICATION FOR PROJECTS ELIGIBLE FOR U.S. ARMY CORPS OF ENGINEERS NATIONWIDE PERMIT NUMBER 33 (TEMPORARY CONSTRUCTION, ACCESS AND DEWATERING) AND RIPARIAN AREA PROTECTION RULES (BUFFER RULES)

Water Quality Certification Number 3893 is issued in conformity with the requirements of Section 401, Public Laws 92-500 and 95-217 of the United States and subject to the North Carolina Division of Water Quality Regulations in 15A NCAC 02H .0500 and 15A NCAC 02B .0200 for the discharge of fill material to waters and wetland areas as described in 33 CFR 330 Appendix A (B) (33) and for the Riparian Area Protection Rules (Buffer Rules) in 15A NCAC 02B .0200.

The State of North Carolina certifies that the specified category of activity will not violate applicable portions of Sections 301, 302, 303, 306 and 307 of the Public Laws 92-500 and 95-217 if conducted in accordance with the conditions hereinafter set forth.

Activities meeting any one (1) of the following thresholds or circumstances require *written approval* for a 401 Water Quality Certification from the Division of Water Quality (the "Division"):

a. Any stream relocation; or
b. Any impact associated with a Notice of Violation or an enforcement action for violation(s) of DWQ Wetland Rules (15A NCAC 02H .0500), Isolated Wetland Rules (15A NCAC 02H .1300), DWQ Surface Water or Wetland Standards, or Riparian Buffer Rules (15A NCAC 02B .0200); or
* c. Any impacts to streams and/or buffers in the Neuse, Tar-Pamlico, or Catawba River Basins or in the Randleman, Jordan or Goose Creek Watersheds (or any other basin or watershed with Riparian Area Protection Rules [Buffer Rules] in effect at the time of application) *unless* the activities are listed as "EXEMPT" from these rules or a Buffer Authorization Certificate is issued through N.C. Division of Coastal Management (DCM) delegation for "ALLOWABLE" activities.

* In accordance with North Carolina General Statute 143-215.3D(e), written approval for a 401 Water Quality General Certification must include the appropriate fee. If a project also requires a CAMA Permit, then one payment to both agencies shall be submitted and will be the higher of the two fees.

Activities included in this General Certification that do not meet one of the thresholds listed above do not require written approval from the Division as long as they comply with the Conditions of Certification listed below. If any of these Conditions cannot be met, then written approval from the Division is required.

Conditions of Certification:

1. No Impacts Beyond those Authorized in the Written Approval or Beyond the Threshold of Use of this Certification

   No waste, spoil, solids, or fill of any kind shall occur in wetlands, waters, or riparian areas beyond the footprint of the impacts depicted in the Pre-Construction Notification, as authorized in the written approval from the Division or beyond the thresholds established for use of this Certification without written authorization, including incidental impacts. All construction activities, including the design, installation, operation, and maintenance of sediment and erosion control Best Management Practices shall be performed so that no violations of state water quality standards, statutes, or rules occur. Approved plans and specifications for this project are incorporated by reference and are enforceable parts of this permit.

Water Quality Certification No. 3893

2. Standard Erosion and Sediment Control Practices

   Erosion and sediment control practices must be in full compliance with all specifications governing the proper design, installation and operation and maintenance of such Best Management Practices and if applicable, comply with the specific conditions and requirements of the NPDES Construction Stormwater Permit issued to the site:

   a. Design, installation, operation, and maintenance of the sediment and erosion control measures must be such that they equal or exceed the requirements specified in the most recent version of the *North Carolina Sediment and Erosion Control Manual*. The devices shall be maintained on all construction sites, borrow sites, and waste pile (spoil) projects, including contractor-owned or leased borrow pits associated with the project.

   b. For borrow pit sites, the erosion and sediment control measures must be designed, installed, operated, and maintained in accordance with the most recent version of the *North Carolina Surface Mining Manual*.

   c. Reclamation measures and implementation must comply with the reclamation in accordance with the requirements of the Sedimentation Pollution Control Act and the Mining Act of 1971.

   d. Sufficient materials required for stabilization and/or repair of erosion control measures and stormwater routing and treatment shall be on site at all times.

   e. If the project occurs in waters or watersheds classified as Primary Nursery Areas (PNAs), SA, WS-I, WS-II, High Quality (HQW), or Outstanding Resource (ORW) waters, then the sedimentation and erosion control designs must comply with the requirements set forth in 15A NCAC 04B .0124, *Design Standards in Sensitive Watersheds*.

3. No Sediment and Erosion Control Measures in Wetlands or Waters

   Sediment and erosion control measures shall not be placed in wetlands or waters. Exceptions to this condition require application submittal to and written approval by the Division. If placement of sediment and erosion control devices in wetlands and waters is unavoidable, then design and placement of temporary erosion control measures shall not be conducted in a manner that may result in dis-equilibrium of wetlands, stream beds, or banks, adjacent to or upstream and downstream of the above structures. All sediment and erosion control devices shall be removed and the natural grade restored within two (2) months of the date that the Division of Land Resources (DLR) or locally delegated program has released the specific area within the project.

4. Construction Stormwater Permit NCG010000

   An NPDES Construction Stormwater Permit is required for construction projects that disturb one (1) or more acres of land. This Permit allows stormwater to be discharged during land disturbing construction activities as stipulated in the conditions of the permit. If your project is covered by this permit, full compliance with permit conditions including the erosion & sedimentation control plan, inspections and maintenance, self-monitoring, record keeping and reporting requirements is required. A copy of the general permit (NCG010000), inspection log sheets, and other information may be found at http://portal.ncdenr.org/web/wq/ws/su/npdessw#tab-w .

   The North Carolina Department of Transportation (NCDOT) shall be required to be in full compliance with the conditions related to construction activities within the most recent version of their individual NPDES (NCS000250) stormwater permit.

Water Quality Certification No. 3893

5. Construction Moratoriums and Coordination

   If activities must occur during periods of high biological activity (i.e. sea turtle nesting, fish spawning, or bird nesting), then biological monitoring may be required at the request of other state or federal agencies and coordinated with these activities.

   All moratoriums on construction activities established by the NC Wildlife Resources Commission (WRC), US Fish and Wildlife Service (USFWS), NC Division of Marine Fisheries (DMF), or National Marine Fisheries Service (NMFS) to lessen impacts on trout, anadromous fish, larval/post-larval fishes and crustaceans, or other aquatic species of concern shall be implemented. Exceptions to this condition require written approval by the resource agency responsible for the given moratorium.

   Work within the twenty-five (25) designated trout counties or identified state or federal endangered or threatened species habitat shall be coordinated with the appropriate WRC, USFWS, NMFS, and/or DMF personnel.

6. Work in the Dry

   All work in or adjacent to stream waters shall be conducted so that the flowing stream does not come in contact with the disturbed area. Approved best management practices from the most current version of the NC Sediment and Erosion Control Manual, or the NC DOT Construction and Maintenance Activities Manual, such as sandbags, rock berms, cofferdams, and other diversion structures shall be used to minimize excavation in flowing water. Exceptions to this condition require application submittal to and written approval by the Division.

7. Riparian Area Protection (Buffer) Rules

   Activities located in the protected riparian areas (whether jurisdictional wetlands or not), within the Neuse, Tar-Pamlico, or Catawba River Basins or in the Randleman, Jordan, or Goose Creek Watersheds (or any other basin or watershed with buffer rules) shall be limited to "uses" identified within and constructed in accordance with 15A NCAC 02B .0233, .0259, .0243, .0250, .0267 and .0605, and shall be located, designed, constructed, and maintained to have minimal disturbance to protect water quality to the maximum extent practicable through the use of best management practices. All buffer rule requirements, including diffuse flow requirements, must be met.

8. If concrete is used during the construction, then all necessary measures shall be taken to prevent direct contact between uncured or curing concrete and waters of the state. Water that inadvertently contacts uncured concrete shall not be discharged to waters of the state due to the potential for elevated pH and possible aquatic life/ fish kills.

9. Bridge deck drains shall not discharge directly into the stream. Stormwater shall be directed across the bridge and pre-treated through site-appropriate means (grassed swales, pre-formed scour holes, vegetated buffers, etc.) before entering the stream. Please refer to the most current version of *Stormwater Best Management Practices.* Exceptions to this condition require written approval by the Division.

10. Placement of culverts and other structures in Waters and Wetlands

    Culverts required for this project shall be designed and installed in such a manner that the original stream profiles are not altered and allow for aquatic life movement during low flows. Existing stream dimensions (including the cross section dimensions, pattern, and longitudinal profile) must be maintained above and below locations of each culvert.

Water Quality Certification No. 3893

Placement of culverts and other structures in waters and streams must be below the elevation of the streambed by one foot for all culverts with a diameter greater than 48 inches, and 20 percent of the culvert diameter for culverts having a diameter less than or equal to 48 inches, to allow low flow passage of water and aquatic life.

When topographic constraints indicate culvert slopes of greater than 5%, culvert burial is not required, provided that all alternative options for flattening the slope have been investigated and aquatic life movement/ connectivity has been provided when possible (rock ladders, crossvanes, etc). Notification to the Division including supporting documentation to include a location map of the culvert, culvert profile drawings, and slope calculations shall be provided to the Division 60 days prior to the installation of the culvert.

When bedrock is present in culvert locations, culvert burial is not required provided that there is sufficient documentation of the presence of bedrock. Notification to the Division including supporting documentation such as, but not limited to, a location map of the culvert, geotechnical reports, photographs, etc shall be provided to the Division a minimum of 60 days prior to the installation of the culvert. If bedrock is discovered during construction, then the Division shall be notified by phone or email within 24 hours of discovery.

If other site-specific topographic constraints preclude the ability to bury the culverts as described above and/or it can be demonstrated that burying the culvert would result in destabilization of the channel, then exceptions to this condition require application submittal to, and written approval by, the Division of Water Quality, regardless of the total impacts to streams or wetlands from the project.

Installation of culverts in wetlands must ensure continuity of water movement and be designed to adequately accommodate high water or flood conditions. Additionally, when roadways, causeways, or other fill projects are constructed across FEMA-designated floodways or wetlands, openings such as culverts or bridges must be provided to maintain the natural hydrology of the system as well as prevent constriction of the floodway that may result in destabilization of streams or wetlands.

The establishment of native, woody vegetation and other soft stream bank stabilization techniques must be used where practicable instead of riprap or other bank hardening methods.

* 11. Compensatory Mitigation

In accordance with 15A NCAC 02H .0506 (h), compensatory mitigation may be required for losses of equal to or greater than 150 linear feet of streams (intermittent and perennial) and/or equal to or greater than one (1) acre of wetlands. For linear public transportation projects, impacts equal to or exceeding 150 linear feet per stream shall require mitigation.

Buffer mitigation may be required for any project with Buffer Rules in effect at the time of application for activities classified as "Allowable with Mitigation" or "Prohibited" within the Table of Uses.

A determination of buffer, wetland, and stream mitigation requirements shall be made for any General Water Quality Certification for this Nationwide and/or Regional General Permit. Design and monitoring protocols shall follow the US Army Corps of Engineers Wilmington District *Stream Mitigation Guidelines* (April 2003) or its subsequent updates. Compensatory mitigation plans shall be submitted to the Division for written approval as required in those protocols. The mitigation plan must be implemented and/or constructed before any impacts occur on site. Alternatively, the Division will accept payment into an in-lieu fee program or a mitigation bank. In these cases, proof of payment shall be provided to the Division before any impacts occur on site.

Water Quality Certification No. 3893

12. Relocated stream designs should include the same dimensions, patterns, and profiles as the existing channel (or a stable reference reach if the existing channel is unstable), to the maximum extent practical. The new channel should be constructed in the dry and water shall not be turned into the new channel until the banks are stabilized. Vegetation used for bank stabilization shall be limited to native woody species, and should include establishment of a 30-foot wide wooded and an adjacent 20-foot wide vegetated buffer on both sides of the relocated channel to the maximum extent practical. A transitional phase incorporating appropriate erosion control matting materials and seedling establishment is allowable, however matting that incorporates plastic mesh and/or plastic twine shall not be used in wetlands, riparian buffers or floodplains as recommended by the North Carolina Sediment and Erosion Control Manual. Rip-rap, A-Jacks, concrete, gabions or other hard structures may be allowed if it is necessary to maintain the physical integrity of the stream; however, the applicant must provide written justification and any calculations used to determine the extent of rip-rap coverage. Please note that if the stream relocation is conducted as a stream restoration as defined in the US Army Corps of Engineers Wilmington District, April 2003 *Stream Mitigation Guidelines* (or its subsequent updates), the restored length may be used as compensatory mitigation for the impacts resulting from the relocation.

13. All temporary fill and culverts shall be removed and the impacted area returned to natural conditions within 60 days of the determination that the temporary impact is no longer necessary. The impacted areas shall be restored to original grade, including each stream's original cross sectional dimensions, plan form pattern, and longitudinal bed and bed profile, and the various sites shall be stabilized with natural woody vegetation (except for the approved maintenance areas) and restored to prevent erosion.

14. Pipes shall be installed under the road or causeway in all streams to carry at least the 25-year storm event as outlined in the most recent edition of the *North Carolina Sediment and Erosion Control Planning and Design Manual* or the *North Carolina Surface Mining Manual* so as not to restrict stream flow during use of this General Certification.

* 15. If an environmental document is required under the National or State Environmental Policy Act (NEPA or SEPA), then this General Certification is not valid until a Finding of No Significant Impact (FONSI) or Record of Decision (ROD) is issued by the State Clearinghouse.

16. In the twenty (20) coastal counties, the appropriate DWQ Regional Office must be contacted to determine if Coastal Stormwater Regulations will be required.

17. This General Certification does not relieve the applicant of the responsibility to obtain all other required Federal, State, or Local approvals.

18. The applicant/permittee and their authorized agents shall conduct all activities in a manner consistent with State water quality standards (including any requirements resulting from compliance with §303(d) of the Clean Water Act), and any other appropriate requirements of State and Federal Law. If the Division determines that such standards or laws are not being met, including failure to sustain a designated or achieved use, or that State or Federal law is being violated, or that further conditions are necessary to assure compliance, then the Division may reevaluate and modify this General Water Quality Certification.

* 19. When written authorization is required for use of this certification, upon completion of all permitted impacts included within the approval and any subsequent modifications, the applicant shall be required to return the certificate of completion attached to the approval. One copy of the certificate shall be sent to the DWQ Central Office in Raleigh at 1650 Mail Service Center, Raleigh, NC, 27699-1650.

R-52

Water Quality Certification No. 3893

20. Additional site-specific conditions, including monitoring and/or modeling requirements, may be added to the written approval letter for projects proposed under this Water Quality Certification in order to ensure compliance with all applicable water quality and effluent standards.

21. This certification grants permission to the director, an authorized representative of the Director, or DENR staff, upon the presentation of proper credentials, to enter the property during normal business hours.

This General Certification shall expire on the same day as the expiration date of the corresponding Nationwide and/or Regional General Permit. The conditions in effect on the date of issuance of Certification for a specific project shall remain in effect for the life of the project, regardless of the expiration date of this Certification.

Non-compliance with or violation of the conditions herein set forth by a specific project may result in revocation of this General Certification for the project and may also result in criminal and/or civil penalties.

The Director of the North Carolina Division of Water Quality may require submission of a formal application for Individual Certification for any project in this category of activity if it is determined that the project is likely to have a significant adverse effect upon water quality, including state or federally listed endangered or threatened aquatic species, or degrade the waters so that existing uses of the wetland or downstream waters are precluded.

Public hearings may be held for specific applications or group of applications prior to a Certification decision if deemed in the public's best interest by the Director of the North Carolina Division of Water Quality.

Effective date: March 19, 2012

DIVISION OF WATER QUALITY

By

Matt Matson for

Charles Wakild, P.E.

Director

History Note: Water Quality Certification (WQC) Number 3893 issued March 19, 2012 replaces WQC Number 3688 issued November 1, 2007; WQC Number 3634 issued March 19, 2007; WQC Number 3366 issued March 18, 2002; WQC Number 3114 issued February 11, 1997; and WQC Number 2727 issued May 1, 1992. This General Certification is rescinded when the Corps of Engineers reauthorizes any of the corresponding Nationwide and/or Regional General Permits or when deemed appropriate by the Director of the Division of Water Quality.

WETLAND PERMIT IMPACT SUMMARY

			WETLAND IMPACTS					SURFACE WATER IMPACTS				
Site No.	Station (From/To)	Structure Size / Type	Permanent Fill In Wetlands (ac)	Temp. Fill In Wetlands (ac)	Excavation in Wetlands (ac)	Mechanized Clearing in Wetlands (ac)	Hand Clearing in Wetlands (ac)	Permanent SW impacts (ac)	Temp. SW impacts (ac)	Existing Channel Impacts Permanent (ft)	Existing Channel Impacts Temp. (ft)	Natural Stream Design (ft)
1	9045+00 -M2- RT	REALIGNED CHANNEL						<0.01		42		
2	9203+15 -M2- LT	FILL	0.02			0.02						
3	9212+00 -M2- LT	36" PIPE	0.03			0.02						
TOTALS:			0.05			0.04		<0.01		42		

NC DEPARTMENT OF TRANSPORTATION
DIVISION OF RAIL

ROWAN COUNTY
P-5206B

SHEET 3/8/2013

ATN Revised 3/31/05

R-53

0164DEL_P10b2

CONTRACT: TIP PROJECT: P-5206B

STATE OF NORTH CAROLINA
RAIL DIVISIONS

ROWAN COUNTY

STATE	STATE PROJECT REFERENCE NO.	SHEET NO.	TOTAL SHEETS
N.C.	P-5206B	1	

STATE PROJ. NO.	F.A. PROJ. NO.	DESCRIPTION
52000.1.STR05T1B		PE, UTL PE
52000.1.STR06T3		PE, UTL PE
43219.2.STR08P5206		ROW
52000.3.STR02T4D		UTL CONST., CONST.

ENGLISH

LOCATION: CP "REID" (MP 337.1) TO SOUTH OF MT. HOPE CHURCH ROAD (MP 340.9) ON THE NCRR/NS MAINLINE

TYPE OF WORK: GRADING, DRAINAGE, PAVING, AND CURB AND GUTTER

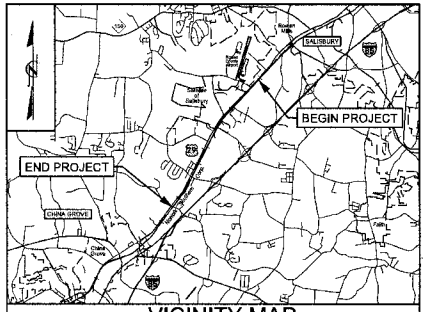

VICINITY MAP

WETLAND AND SURFACE WATER IMPACTS PERMIT

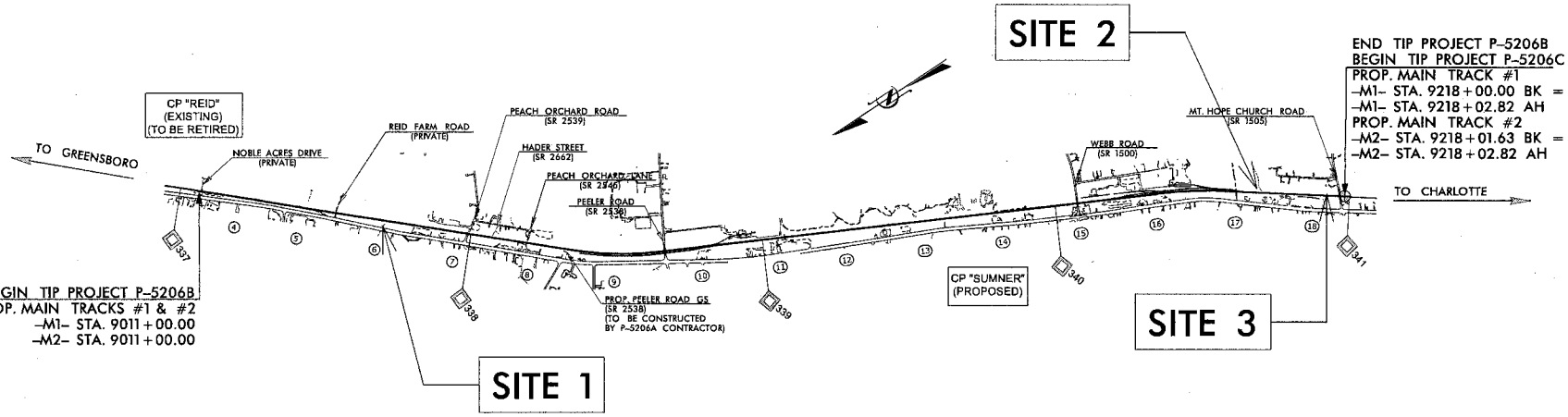

CLEARING ON THIS PROJECT SHALL BE PERFORMED TO THE LIMITS ESTABLISHED IN METHOD III.

THIS PROJECT IS WITHIN THE MUNICIPAL BOUNDARIES OF ROWAN COUNTY.

PRELIMINARY PLANS
DO NOT USE FOR CONSTRUCTION

SUBMITTAL: 90% PLANS
DATE: JANUARY 25, 2012

GRAPHIC SCALES

50 0 50 100
PLANS

50 0 50 100
PROFILE (HORIZONTAL)

10 0 10 20
PROFILE (VERTICAL)

PROJECT LENGTH

LENGTH OF RAIL TIP PROJECT	3.8 MILES
MAIN TRACK	5.2 MILES
OTHER THAN MAIN TRACK	1.1 MILES
LENGTH OF ROADWAY TIP PROJECT	0.2 MILES

Prepared in the Offices of:

STV/Ralph Whitehead Associates, Inc.
1000 West Morehead St., Ste. 250
Charlotte, NC 28208
NC License Number F-0891

SUNGATE DESIGN GROUP, P.A.

2012 STANDARD SPECIFICATIONS

RIGHT OF WAY DATE: SEPTEMBER 2012

LETTING DATE: JULY 2013

DONALD H. ARANT, P.E.
RAIL PROJECT ENGINEER

TONI R. WILSON, E.I.
RAIL DESIGN ENGINEER

MATTHEW B. SIMMONS, P.E.
NCDOT PROJECT MANAGER

JOSH DALTON, P.E.
HYDROLOGY ENGINEER

RICHARD ODYNSKI, P.E.
ROADWAY ENGINEER

NC DEPARTMENT OF TRANSPORTATION
RAIL DIVISION
PLANNING AND DEVELOPMENT

$$$$$$SYSTIME$$$$
$$$$$$$$$$$$$$$$DGN$$$$$$$$$$$$$$$$
$$$$$$$$$$$$$$$$USERNAME$$$$

R-54

0164DEL_P10b2

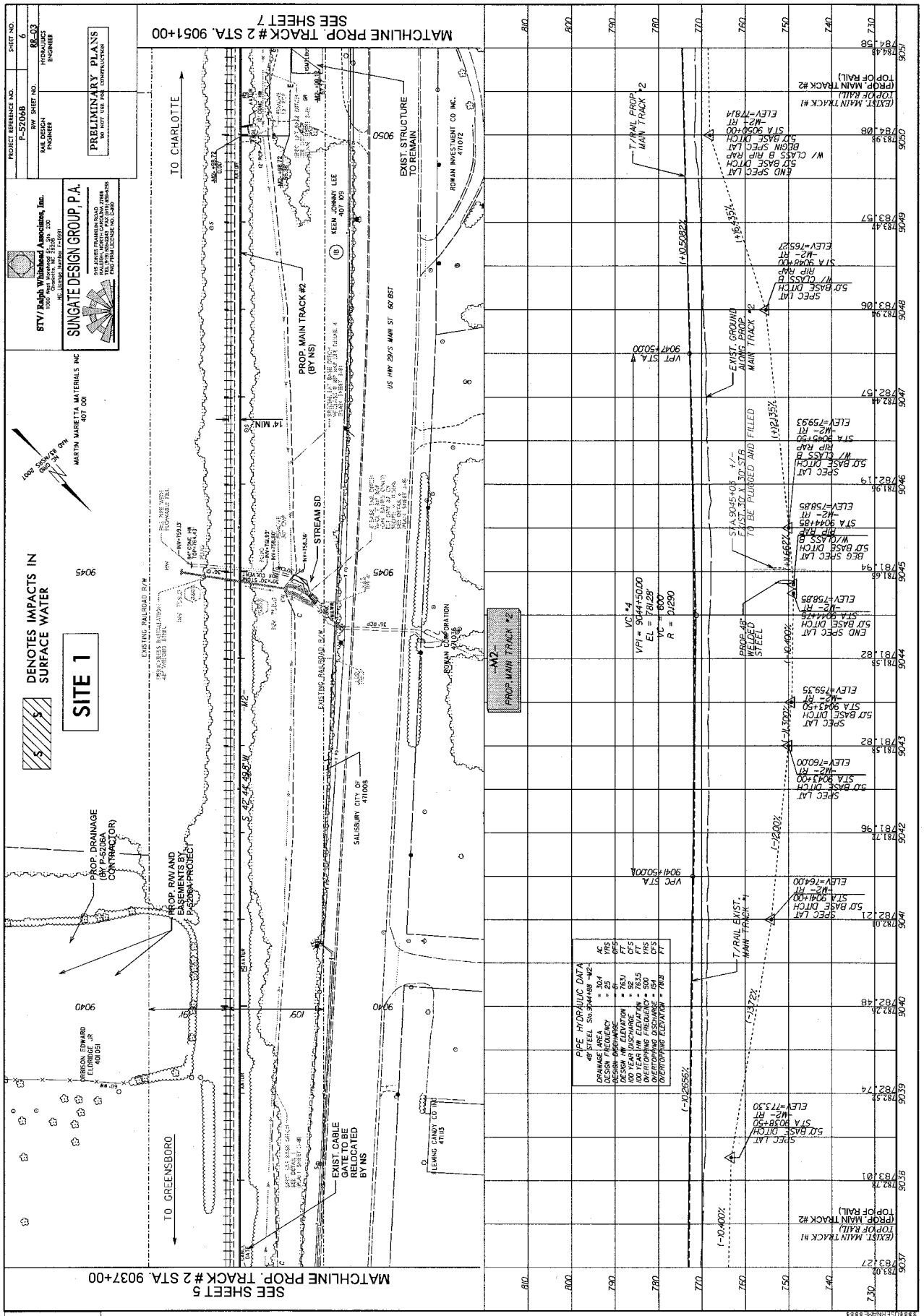
PROJECT REFERENCE NO.
P-5206B
SHEET NO.
6
R/W SHEET NO.
RR-03
RAIL DIVISION ENGINEER
HYDRAULICS ENGINEER
PRELIMINARY PLANS
STV/Ralph Whitehead Associates, Inc.
SUNGATE DESIGN GROUP, P.A.
DENOTES IMPACTS IN SURFACE WATER
SITE 1
TO CHARLOTTE
TO GREENSBORO
MATCHLINE PROP. TRACK # 2 STA. 9051+00
SEE SHEET 7
MATCHLINE PROP. TRACK # 2 STA. 9037+00
SEE SHEET 5
PROP. MAIN TRACK #2 (BY NS)
STREAM SD
EXIST. STRUCTURE TO REMAIN
EXIST. CABLE GATE TO BE RELOCATED BY NS
PROP. DRAINAGE (BY P-5206A CONTRACTOR)
PROP. R/W AND EASEMENTS BY P-5206A PROJECT
MARTIN MARIETTA MATERIALS INC 407 001
KEEN JOHNNY LEE 407 103
ROWAN INVESTMENT CO INC. 471072
ROWAN CORPORATION 471038
SALISBURY CITY OF 471008
FLEMING CANDY CO 471113
ORBISON EDWARD ELDRIDGE JR 401051
US HWY 29/S MAIN ST 60' BST
EXISTING RAILROAD R/W
PROP. MAIN TRACK #2
T/RAIL PROP. MAIN TRACK #2
T/RAIL EXIST. MAIN TRACK #1
EXIST. GROUND ALONG PROP. MAIN TRACK #2
VPI = 9044+50.00
EL = 781.28'
VC = 800'
R = 01290
VC #4
PIPE HYDRAULIC DATA
48" STEEL SKS.9044+68 =42'
DRAINAGE AREA = 1.0 AC
DESIGN FREQUENCY = 25 YRS
DESIGN DISCHARGE = 61 CFS
DESIGN HW ELEVATION = 763.1 FT
100 YEAR DISCHARGE = 92 CFS
100 YEAR HW ELEVATION = 763.5 FT
OVERTOPPING FREQUENCY = 500 YRS
OVERTOPPING DISCHARGE = 154 CFS
OVERTOPPING ELEVATION = 765.8 FT

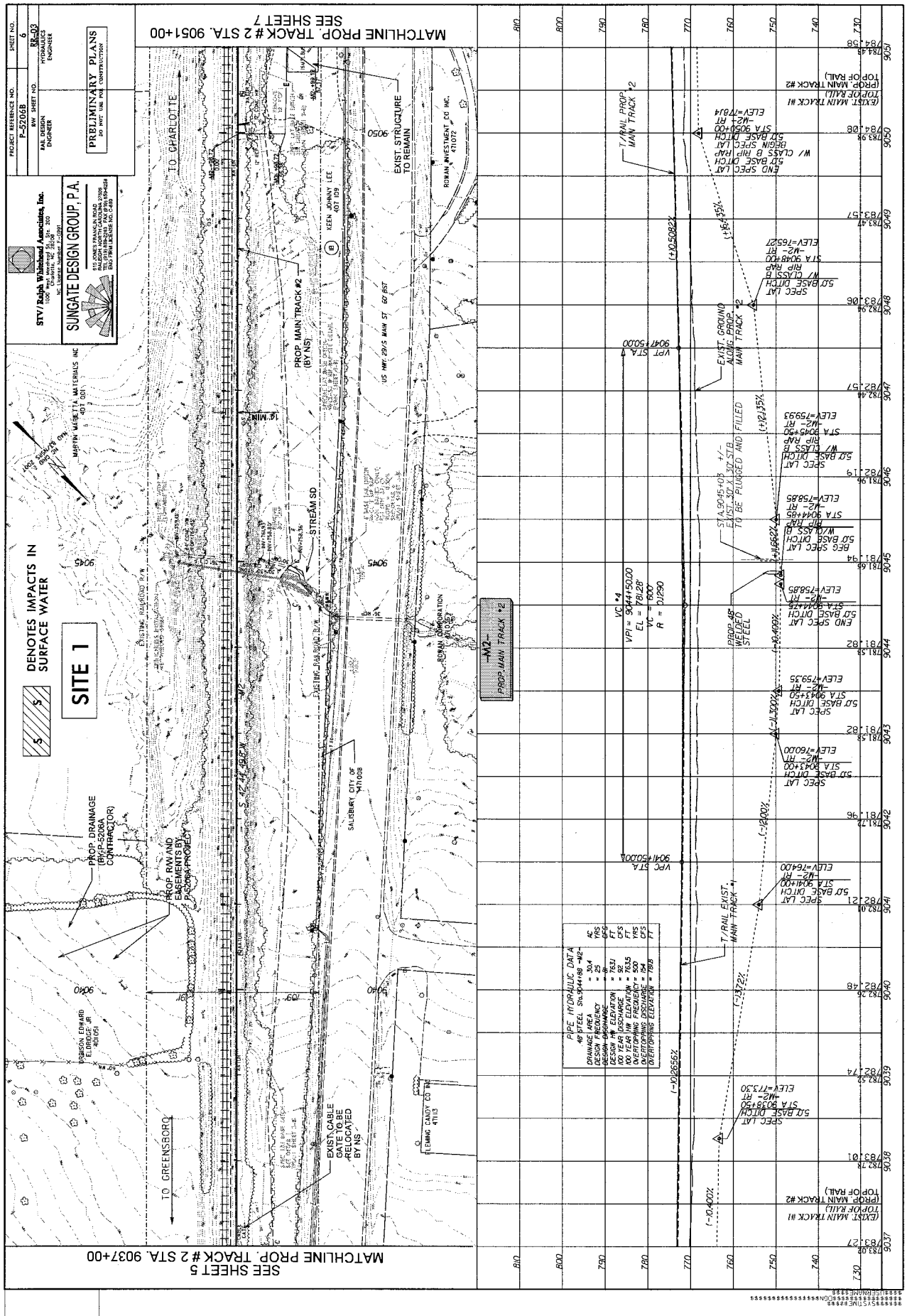
PRELIMINARY PLANS
SUNGATE DESIGN GROUP, P.A.
STV/Ralph Whitehead Associates, Inc.
SITE 1
DENOTES IMPACTS IN SURFACE WATER
MATCHLINE PROP. TRACK # 2 STA. 9051+00
SEE SHEET 7
MATCHLINE PROP. TRACK # 2 STA. 9037+00
SEE SHEET 5
TO CHARLOTTE
TO GREENSBORO
PROP. MAIN TRACK #2 (BY NS)
STREAM SD
EXIST. STRUCTURE TO REMAIN
EXIST. CABLE GATE TO BE RELOCATED BY NS
PROP. DRAINAGE (BY P-5206A CONTRACTOR)
PROP. R/W AND EASEMENTS BY P-5206A PROJECT
SALISBURY CITY OF 417038
KEEN JOHNNY LEE 407 109
ROMAN INVESTMENT CO INC. 471072
FLEMING CANDY CO INC 471113
MARTIN MARIETTA MATERIALS INC 401 001
DIBBSON EDWARD ELDRIDGE JR 400 051
US HWY 29/S MAIN ST 60' BST
PROP. MAIN TRACK #2
PROP. MAIN TRACK #1
T/RAIL PROP. MAIN TRACK #2
T/RAIL EXIST. MAIN TRACK #1
EXIST. GROUND ALONG PROP. MAIN TRACK #2
PIPE HYDRAULIC DATA
VC #4
VPI = 9044+50.00
EL = 781.28'
VC = 600
R = 01290
VPT STA 9041+50.00
VPC STA 9041+50.00A
PROP. 48" WELDED STEEL
STA. 9045+03 +/- EXIST. 30" X 30" STA TO BE PLUGGED AND FILLED
END SPEC LAT 50' BASE DITCH STA 9044+75 -M2- RT ELEV=758.85
BEG SPEC LAT 50' BASE DITCH W/ CLASS B RIP RAP STA 9044+85 -M2- RT ELEV=758.85
SPEC LAT 50' BASE DITCH STA 9045+50 -M2- RT ELEV=759.93
SPEC LAT 50' BASE DITCH STA 9041+50 -M2- RT ELEV=759.35
SPEC LAT 50' BASE DITCH STA 9043+00 -M2- RT ELEV=760.00
SPEC LAT 50' BASE DITCH STA 9041+00 -M2- RT ELEV=764.00
SPEC LAT 50' BASE DITCH STA 9038+50 -M2- RT ELEV=773.30
END SPEC LAT 50' BASE DITCH W/ CLASS B RIP RAP BEGIN SPEC LAT 50' BASE DITCH STA 9050+00 -M2+ RT ELEV=778.14
SPEC LAT 50' BASE DITCH W/ CLASS B RIP RAP STA 9048+00 -M2- RT ELEV=765.27
(EXIST. MAIN TRACK #1 TOP OF RAIL)
(PROP. MAIN TRACK #2 TOP OF RAIL)

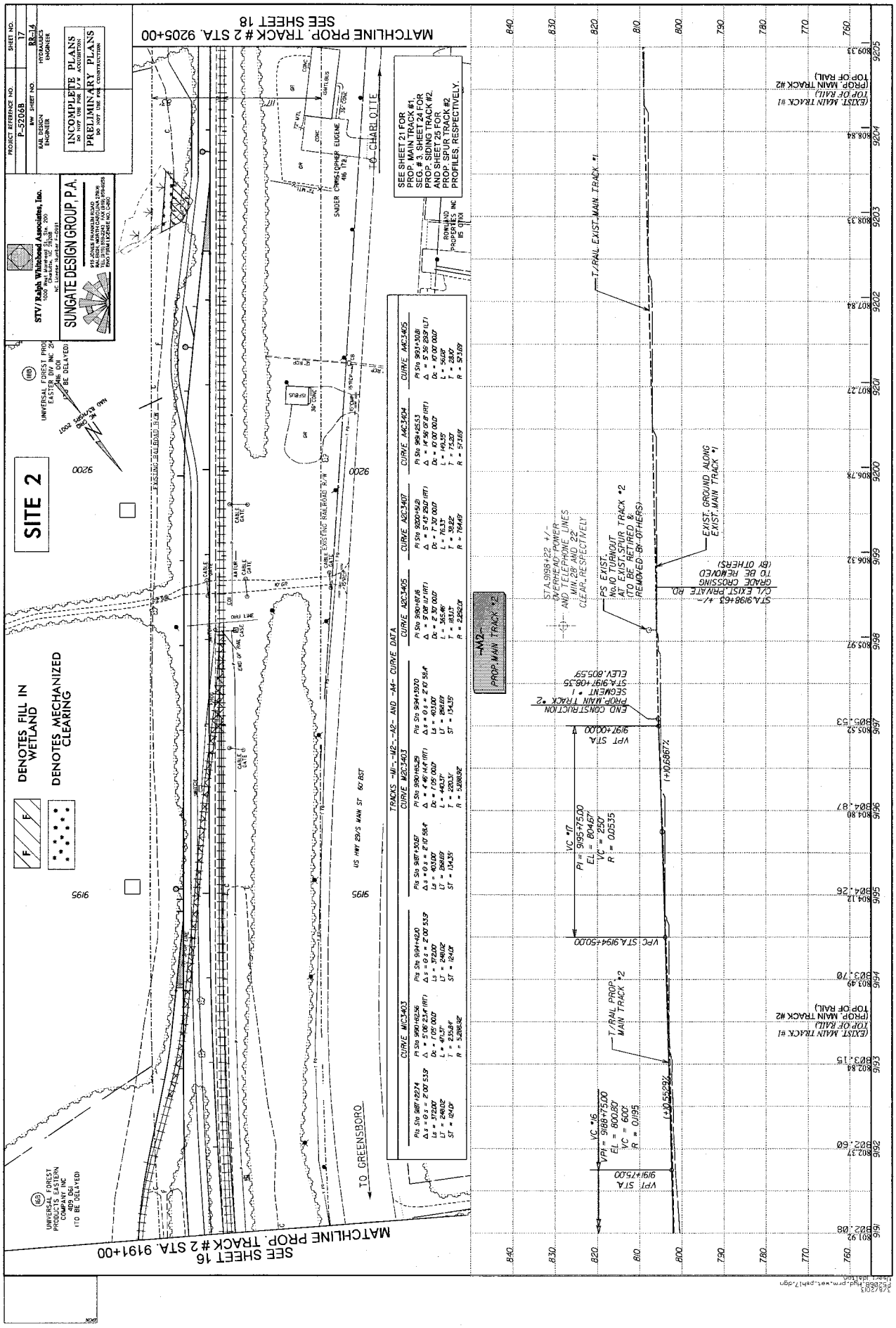
PROJECT REFERENCE NO. P-5706B
SHEET NO. 17
R/W SHEET NO. RR-14
RAIL DESIGN ENGINEER
HYDRAULICS ENGINEER
INCOMPLETE PLANS
DO NOT USE FOR R/W ACQUISITION
PRELIMINARY PLANS
DO NOT USE FOR CONSTRUCTION
STV/Ralph Whitehead Associates, Inc.
SUNGATE DESIGN GROUP, P.A.
SITE 2
DENOTES FILL IN WETLAND
DENOTES MECHANIZED CLEARING
MATCHLINE PROP. TRACK # 2 STA. 9205+00
SEE SHEET 18
MATCHLINE PROP. TRACK # 2 STA. 9191+00
SEE SHEET 16
TO GREENSBORO
TO CHARLOTTE
US HWY 29-S MAIN ST 60' BST
SNIDER CHRISTOPHER EUGENE
ROWLAND PROPERTIES INC.
UNIVERSAL FOREST PRODUCTS EASTERN COMPANY INC
SEE SHEET 21 FOR PROP. MAIN TRACK #1, SEG. # 3, SHEET 24 FOR PROP. SIDING TRACK #2, AND SHEET 23 FOR PROP. STUB TRACK #2 PROFILES, RESPECTIVELY.
TRACKS -M1-,-M2-,-A2- AND -A4- CURVE DATA
CURVE M1C3403
CURVE M2C3403
CURVE A2C3405
CURVE A2C3407
CURVE A4C3404
CURVE A4C3405
PROP. MAIN TRACK #2
T/RAIL PROP. MAIN TRACK #2
T/RAIL EXIST. MAIN TRACK #1
EXIST. GROUND ALONG EXIST. MAIN TRACK #1
VC #16
VPI = 9188+75.00
EL = 800.80'
VC = 600'
R = 0.0195
VPI STA 9191+75.00
VPC STA 9194+50.00
VC #17
PI = 9195+75.00
EL = 804.67'
VC = 250'
R = 0.0535
VPT STA 9197+00.00
END CONSTRUCTION PROP. MAIN TRACK #2 SEGMENT #1 STA. 9197+08.55 ELEV. 805.59'
STA. 9198+22 +/- OVERHEAD POWER LINES AND WIRE PHONE LINES CLEAR. RE SPECTIVELY
PS. EXIST. No. 10 TURNOUT AT EXIST. SPUR TRACK #2 (TO BE RETIRED & REMOVED BY OTHERS)
STA. 9198+63 +/- C/L EXIST. PRIVATE RD. GRADE CROSSING TO BE REMOVED (BY OTHERS)
(EXIST. MAIN TRACK #1 TOP OF RAIL)
(PROP. MAIN TRACK #2 TOP OF RAIL)

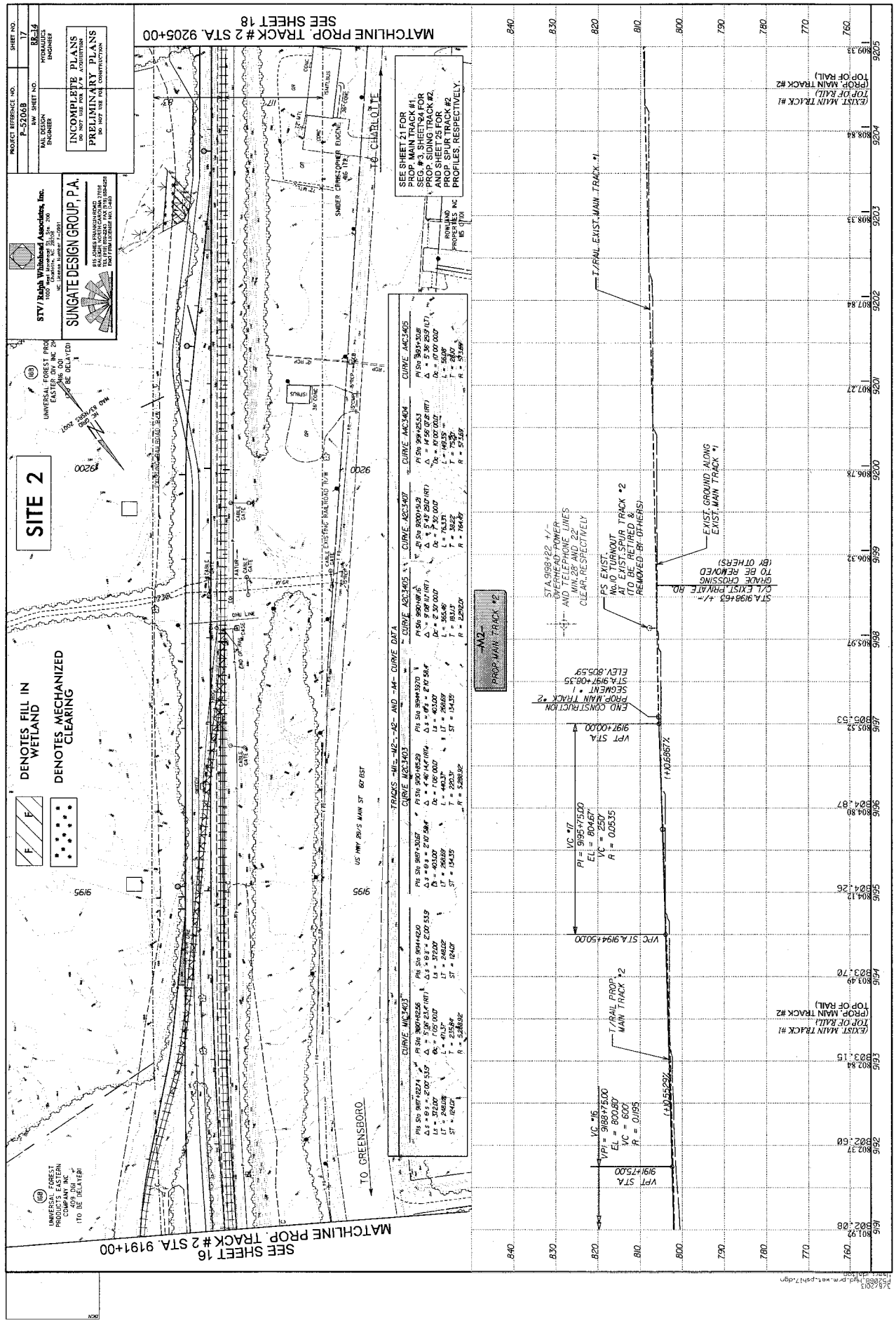
PROJECT REFERENCE NO. P-5206B
SHEET NO. 17
R/W SHEET NO.
RR-14
RAIL DESIGN ENGINEER
HYDRAULICS ENGINEER
INCOMPLETE PLANS
DO NOT USE FOR R/W ACQUISITION
PRELIMINARY PLANS
DO NOT USE FOR CONSTRUCTION
STV/Ralph Whitehead Associates, Inc.
SUNGATE DESIGN GROUP, P.A.
SITE 2
DENOTES FILL IN WETLAND
DENOTES MECHANIZED CLEARING
MATCHLINE PROP. TRACK # 2 STA. 9205+00
SEE SHEET 18
MATCHLINE PROP. TRACK # 2 STA. 9191+00
SEE SHEET 16
TO CHARLOTTE
TO GREENSBORO
SEE SHEET 21 FOR PROP. MAIN TRACK #1 SEG. #3, SHEET 24 FOR PROP. SIDING TRACK #2, AND SHEET 23 FOR PROP. SPUR TRACK #2 PROFILES, RESPECTIVELY.
ROWLAND PROPERTIES INC
UNIVERSAL FOREST PRODUCTS EASTERN COMPANY INC
(TO BE DELAYED)
CURVE N1C-3403
CURVE N2C-3403
CURVE A2C-3405
CURVE A2C-3407
CURVE A4C-3404
CURVE A4C-3405
TRACKS -N1-, -N2-, -A2- AND -A4- CURVE DATA
PROP. MAIN TRACK #2
PROP. MAIN TRACK #1
T/RAIL PROP. MAIN TRACK #2
T/RAIL EXIST. MAIN TRACK #1
EXIST. GROUND ALONG EXIST. MAIN TRACK #1
PS EXIST. NO.10 TURNOUT AT EXIST. SPUR TRACK #2 (TO BE RETIRED & REMOVED BY OTHERS)
STA. 9198+63 +/- C/L EXIST. PRIVATE RD. GRADE CROSSING TO BE REMOVED (BY OTHERS)
STA. 9198+22 +/- SWITCHEAD POWER AND TELEPHONE LINES MIN. 22' ABOVE CLEAR. RESPECTIVELY
END CONSTRUCTION PROP. MAIN TRACK #2 SEGMENT #1 STA. 9197+08.35 ELEV. 805.59'
VPT STA 9197+00.00
VC #17 PI = 9195+75.00 EL = 804.67' VC = 250' R = 0.0535
VPC STA 9194+50.00
VC #16 VPI = 9188+75.00 EL = 800.60' VC = 600' R = 0.195
VPT STA 9191+75.00
(+0.66867%)
(+0.55242%)
EXIST. MAIN TRACK #1 TOP OF RAIL
PROP. MAIN TRACK #2 TOP OF RAIL

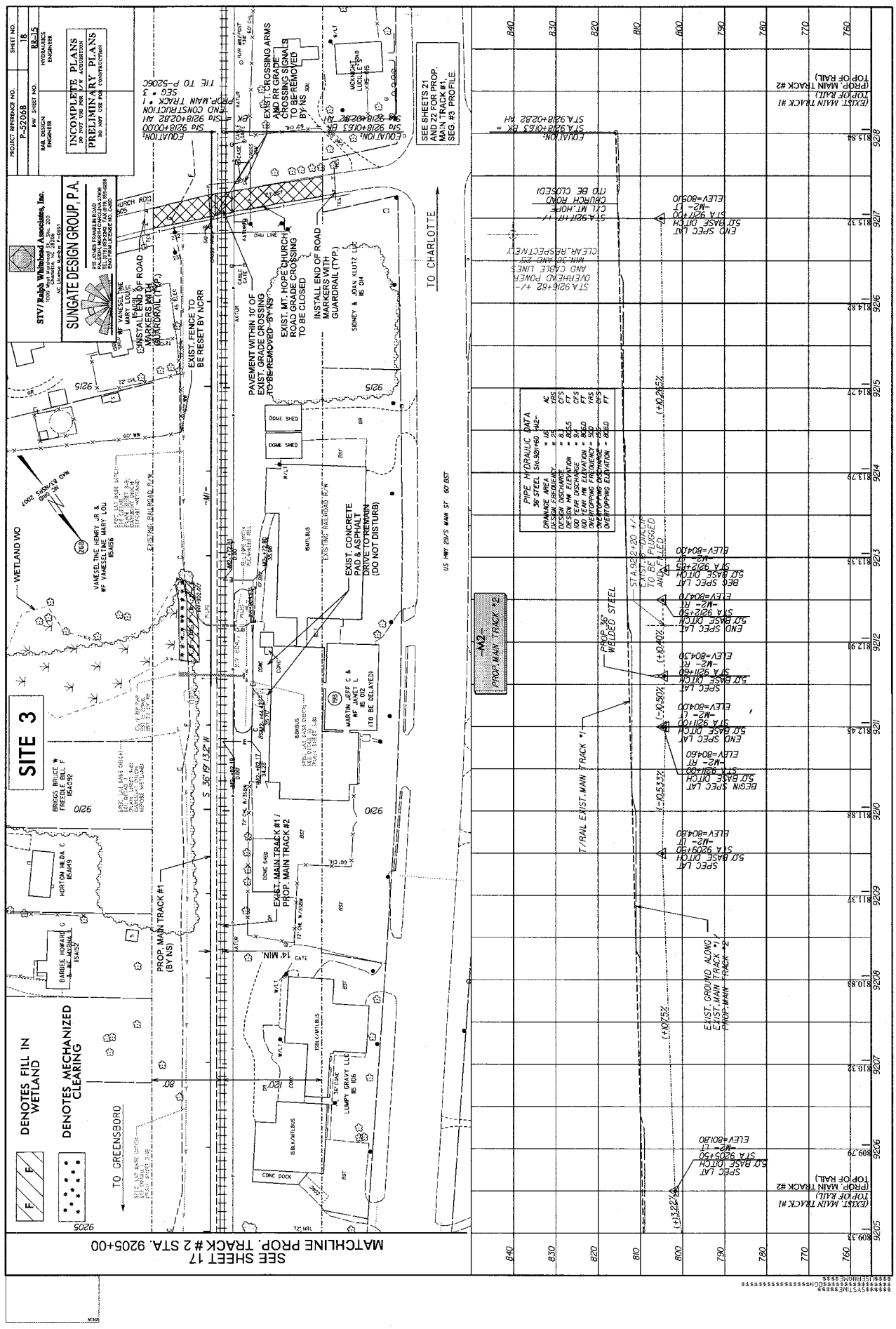
SUNGATE DESIGN GROUP, P.A.
STV/Ralph Whitehead Associates, Inc.
INCOMPLETE PLANS
PRELIMINARY PLANS
SITE 3
DENOTES FILL IN WETLAND
DENOTES MECHANIZED CLEARING
TO GREENSBORO
TO CHARLOTTE
US HWY 29/S MAIN ST 60' BST
PROP. MAIN TRACK #1 (BY NS)
EXIST. MAIN TRACK #1 / PROP. MAIN TRACK #2
EXIST. CONCRETE PAD & ASPHALT DRIVE TO REMAIN (DO NOT DISTURB)
EXIST. FENCE TO BE RESET BY NORR
PAVEMENT WITHIN 10' OF EXIST. GRADE CROSSING TO BE REMOVED BY NS
EXIST. MT. HOPE CHURCH ROAD GRADE CROSSING TO BE CLOSED
INSTALL END OF ROAD MARKERS WITH GUARDRAIL (TYP.)
EXIST. GROUND ALONG EXIST. MAIN TRACK #1 PROP. MAIN TRACK #2
T/RAIL EXIST. MAIN TRACK #1
PROP. MAIN TRACK #2
SEE SHEET 17
MATCHLINE PROP. TRACK # 2 STA. 9205+00

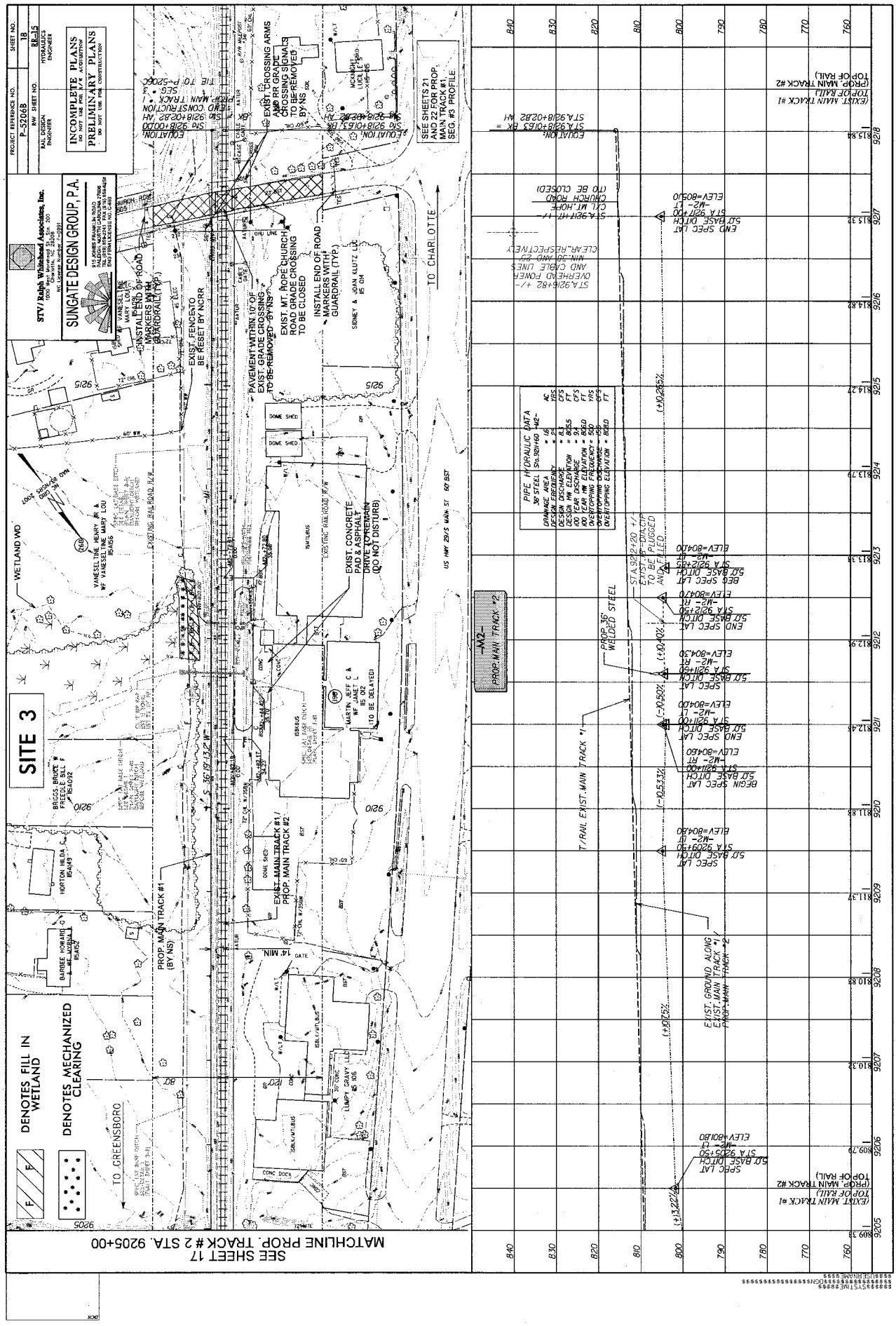
SITE 3
SUNGATE DESIGN GROUP, P.A.
STV / Ralph Whitehead Associates, Inc.
INCOMPLETE PLANS
PRELIMINARY PLANS
DENOTES FILL IN WETLAND
DENOTES MECHANIZED CLEARING
TO GREENSBORO
TO CHARLOTTE
US HWY 29/S MAIN ST
WETLAND WO
EXISTING RAILROAD R/W
EXIST. MAIN TRACK #1 / PROP. MAIN TRACK #2
PROP. MAIN TRACK #1 (BY NS)
EXIST. CONCRETE PAD & ASPHALT DRIVE TO REMAIN (DO NOT DISTURB)
EXIST. MT. HOPE CHURCH ROAD GRADE CROSSING TO BE CLOSED
INSTALL END OF ROAD MARKERS WITH GUARDRAIL (TYP.)
EXIST. FENCE TO BE RESET BY NORR
PAVEMENT WITHIN 10' OF EXIST. GRADE CROSSING TO BE REMOVED BY NS
EXIST. CROSSING ARMS AND RR GRADE CROSSING SIGNALS TO BE REMOVED BY NS
SEE SHEETS 21 AND 22 FOR PROP. MAIN TRACK #1, SEG. #3 PROFILE
SEE SHEET 17
MATCHLINE PROP. TRACK # 2 STA. 9205+00
PROP. MAIN TRACK #2
T/RAIL EXIST. MAIN TRACK #1
PROP. 36" WELDED STEEL
EXIST. GROUND ALONG EXIST. MAIN TRACK #1 / PROP. MAIN TRACK #2
PIPE HYDRAULIC DATA
END SPEC LAT 5' BASE DITCH
BEGIN SPEC LAT 5' BASE DITCH
SPEC LAT 5' BASE DITCH

3/16/2013
P-5206B_Hyd_prm_wat_XPL2.dgn
User: jdalton

10/26/98

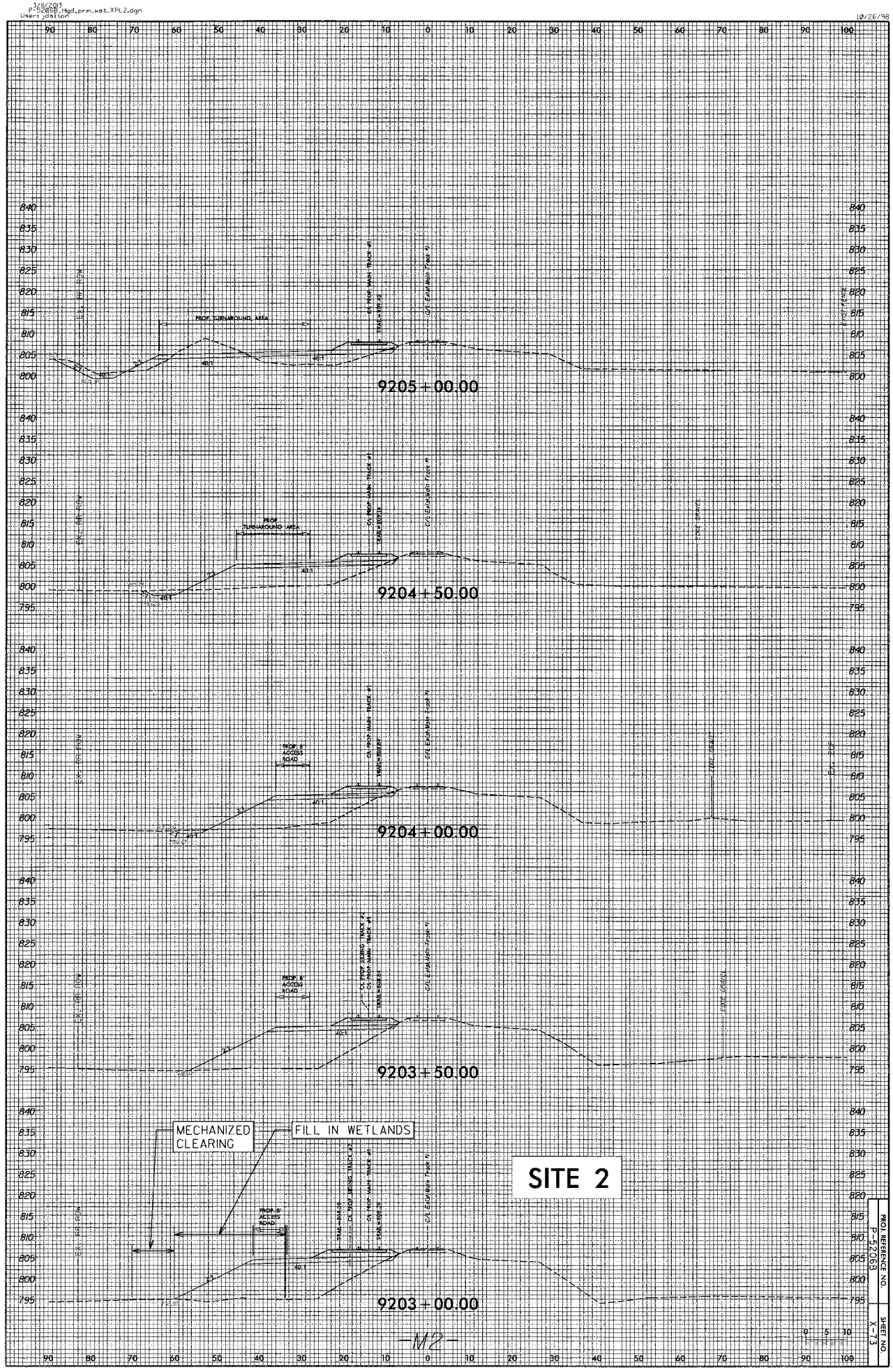

3/8/2013
P-5206B_Hyd_prm_wet_XPL2.dgn
User: jdalton

10/26/98

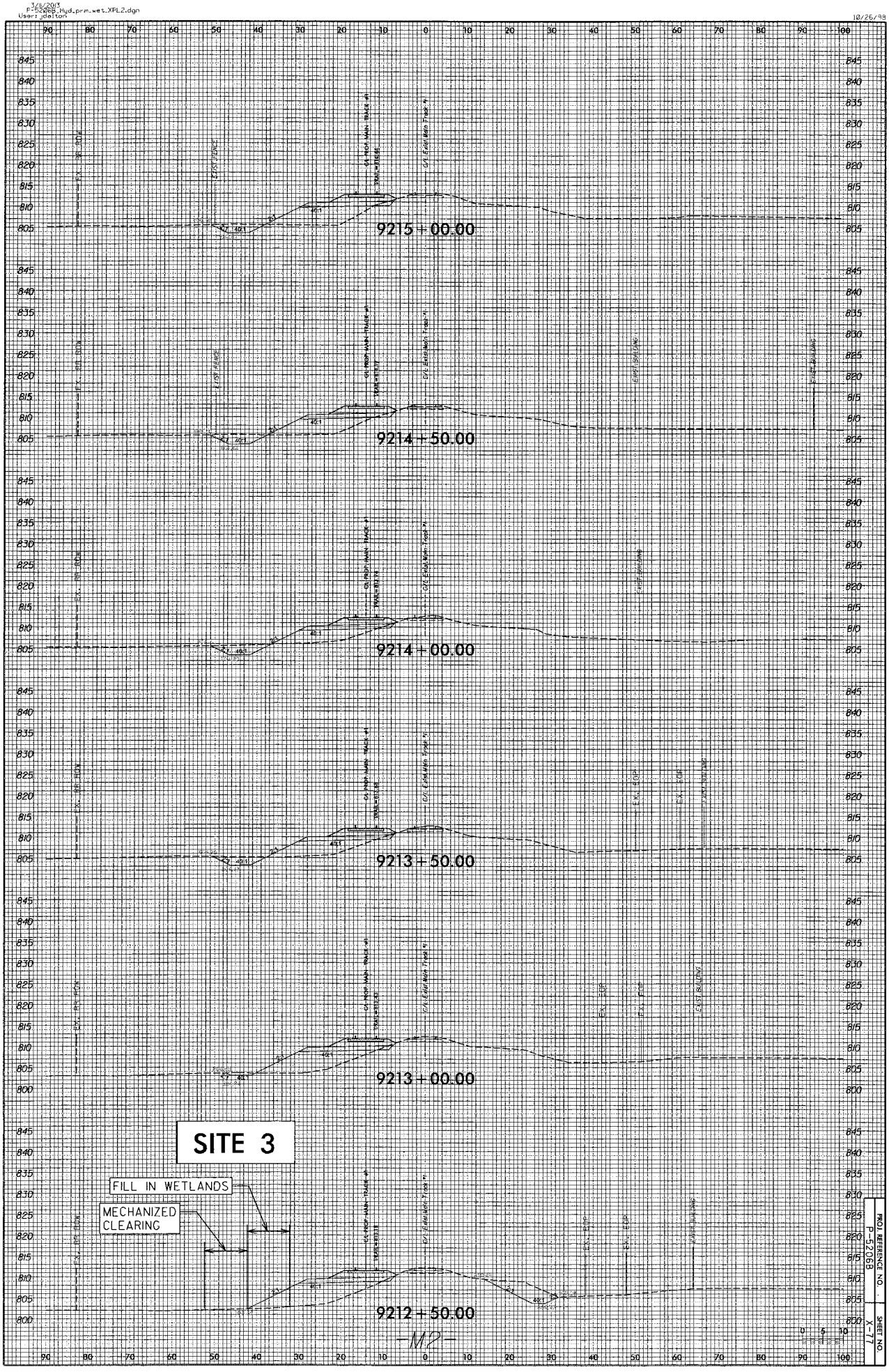

-MP-

WETLAND PERMIT IMPACT SUMMARY

			WETLAND IMPACTS					SURFACE WATER IMPACTS				
Site No.	Station (From/To)	Structure Size / Type	Permanent Fill In Wetlands (ac)	Temp. Fill In Wetlands (ac)	Excavation in Wetlands (ac)	Mechanized Clearing in Wetlands (ac)	Hand Clearing in Wetlands (ac)	Permanent SW impacts (ac)	Temp. SW impacts (ac)	Existing Channel Impacts Permanent (ft)	Existing Channel Impacts Temp. (ft)	Natural Stream Design (ft)
1	9227+58/9228+92 -M2C-	FILL/TAIL DITCH	0.04		<0.01	0.01						
2	9234+30/9235+72 -M2C-	FILL/DITCH	0.02		0.01	0.02						
3	9406+86 /9408+01-M2C-	54" PIPE/DITCH						0.02		228		
TOTALS:			0.06		0.02	0.03		0.02		228		

NC DEPARTMENT OF TRANSPORTATION
DIVISION OF RAIL

ROWAN COUNTY
P-5206C

SHEET 11/20/2012

ATN Revised 3/31/05

R-63

0164DEL_P10b2

TIP PROJECT: P-5206C

CONTRACT:

STATE OF NORTH CAROLINA
NCDOT RAIL DIVISION

ROWAN COUNTY

STATE	STATE PROJECT REFERENCE NO.	SHEET NO.	TOTAL SHEETS
N.C.	P-5206C	1	

STATE PROJ. NO.	F.A. PROJ. NO.	DESCRIPTION
52000.1.STR07T1B		PE
52000.1.STR08T3		R/W & UTIL.

LOCATION: NCRR/NS MAINLINE REID TO NORTH KANNAPOLIS RAILROAD ROADBED (MP 337.0 TO MP 348.3)

TYPE OF WORK: GRADING, DRAINAGE, PAVING, STRUCTURE CURB AND GUTTER, RETAINING WALLS, AND SIGNALS

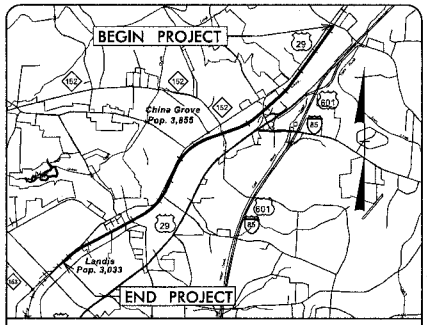

VICINITY MAP

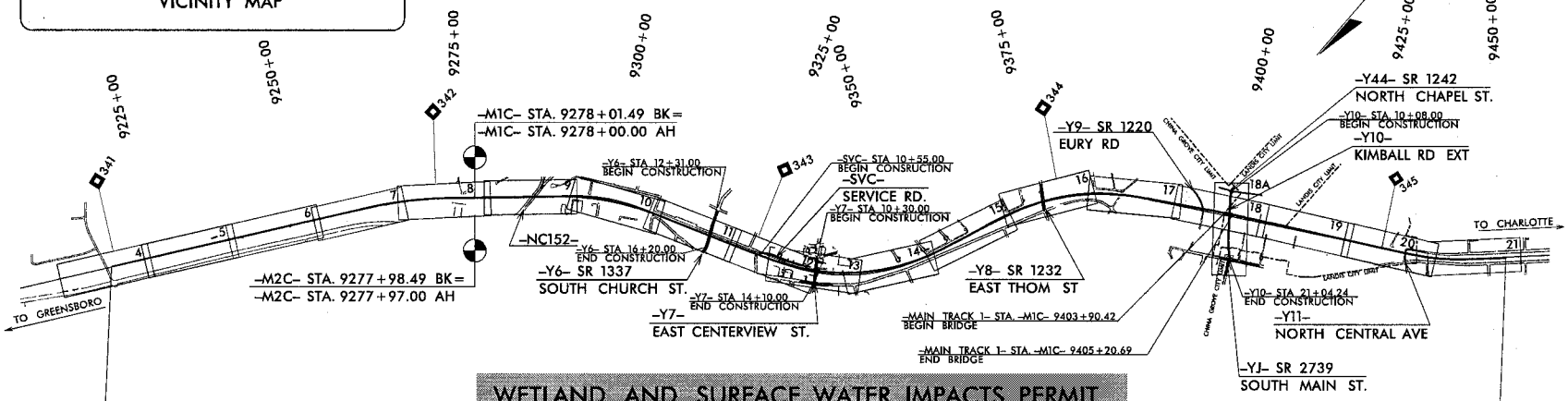

WETLAND AND SURFACE WATER IMPACTS PERMIT

END TIP PROJECT P-5206B
BEGIN TIP PROJECT P-5206C
MAIN TRACK 1 STA. -M1B- 9218+00.00 BK =
STA. -M1C- 9218+02.82 AH
MAIN TRACK 2 STA. -M2B- 9218+01.63 BK =
STA. -M2C- 9218+02.82 AH

END TIP PROJECT P-5206C
BEGIN TIP PROJECT P-5206D
MAIN TRACK 1 STA. -M1C- 9450+00.00 BK =
STA. -M1D- 9450+39.03 AH
MAIN TRACK 2 STA. -M2C- 9449+97.71 BK =
STA. -M2D- 9450+39.03 AH

PRELIMINARY PLANS
DO NOT USE FOR CONSTRUCTION

CLEARING ON THIS PROJECT SHALL BE PERFORMED TO THE LIMITS ESTABLISHED BY METHOD III.

A PORTION OF THIS PROJECT IS WITHIN THE MUNICIPAL BOUNDARIES OF CHINA GROVE AND LANDIS.

SUBMITTAL: RIGHT OF WAY PLANS
DATE: AUGUST 31, 2012

GRAPHIC SCALES
PLANS: 50 25 0 50 100
PROFILE (HORIZONTAL): 50 25 0 50 100
PROFILE (VERTICAL): 10 5 0 10 20

PROJECT LENGTH
LENGTH OF RAIL TIP PROJECT = 4.369 MILES
LENGTH OF STRUCTURE TIP PROJECT = 0.025 MILES

TGS ENGINEERS
Prepared in the Office of:
TGS ENGINEERS
804-C N. LAFAYETTE STREET
SHELBY, NC 28150
PH (704) 476 0003
CORP. LICENSE NO. C-0275

2012 STANDARD SPECIFICATIONS

RIGHT OF WAY DATE: AUGUST 31, 2012
LETTING DATE: JULY 16, 2013

LEONARD FLETCHER, PE, PLS
PROJECT ENGINEER

JIMMY TERRY, PE
PROJECT DESIGN ENGINEER

RAIL ENGINEER
SIGNATURE: P.E.

HYDRAULICS ENGINEER
SIGNATURE: P.E.

NC DEPARTMENT OF TRANSPORTATION
RAIL DIVISION
PLANNING AND DEVELOPMENT

R-64

0164DEL_P10b2

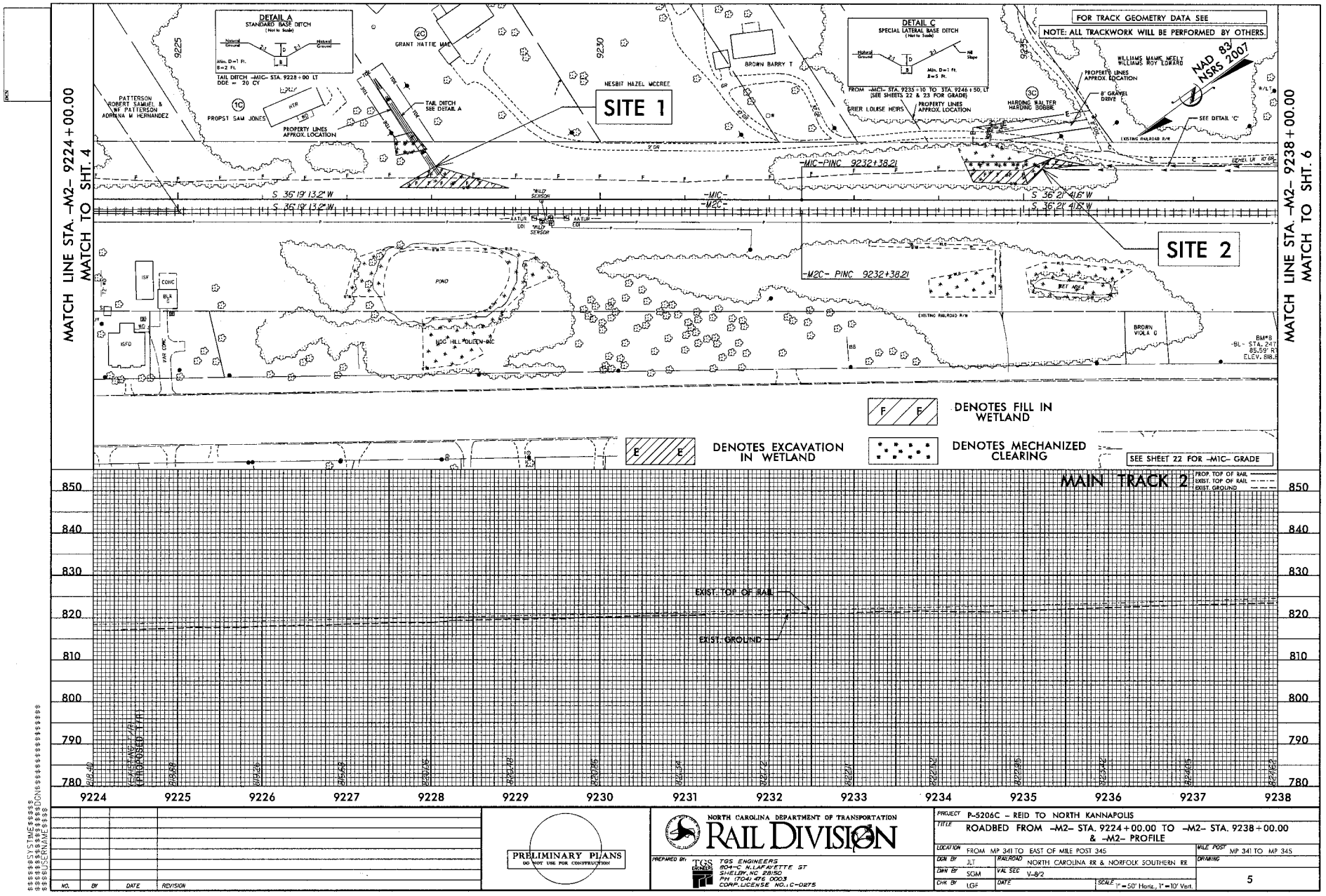

NO.	BY	DATE	REVISION

PRELIMINARY PLANS
DO NOT USE FOR CONSTRUCTION

NORTH CAROLINA DEPARTMENT OF TRANSPORTATION
RAIL DIVISION

PREPARED BY: TGS ENGINEERS
TGS ENGINEERS
904-C N. LAFAYETTE ST
SHELBY, NC 28150
PH (704) 476 0003
CORP. LICENSE NO. C-0275

PROJECT	P-5206C – REID TO NORTH KANNAPOLIS
TITLE	ROADBED FROM -M2- STA. 9224+00.00 TO -M2- STA. 9238+00.00 & -M2- PROFILE
LOCATION	FROM MP 341 TO EAST OF MILE POST 345
MILE POST	MP 341 TO MP 345
DGN BY	JLT
RAILROAD	NORTH CAROLINA RR & NORFOLK SOUTHERN RR
DWN BY	SGM
VAL SEC	V-8/2
DRAWING	5
CHK BY	LGF
DATE	
SCALE	1" = 50' Horiz., 1" = 10' Vert.

R-65

0164DEL_P10b2

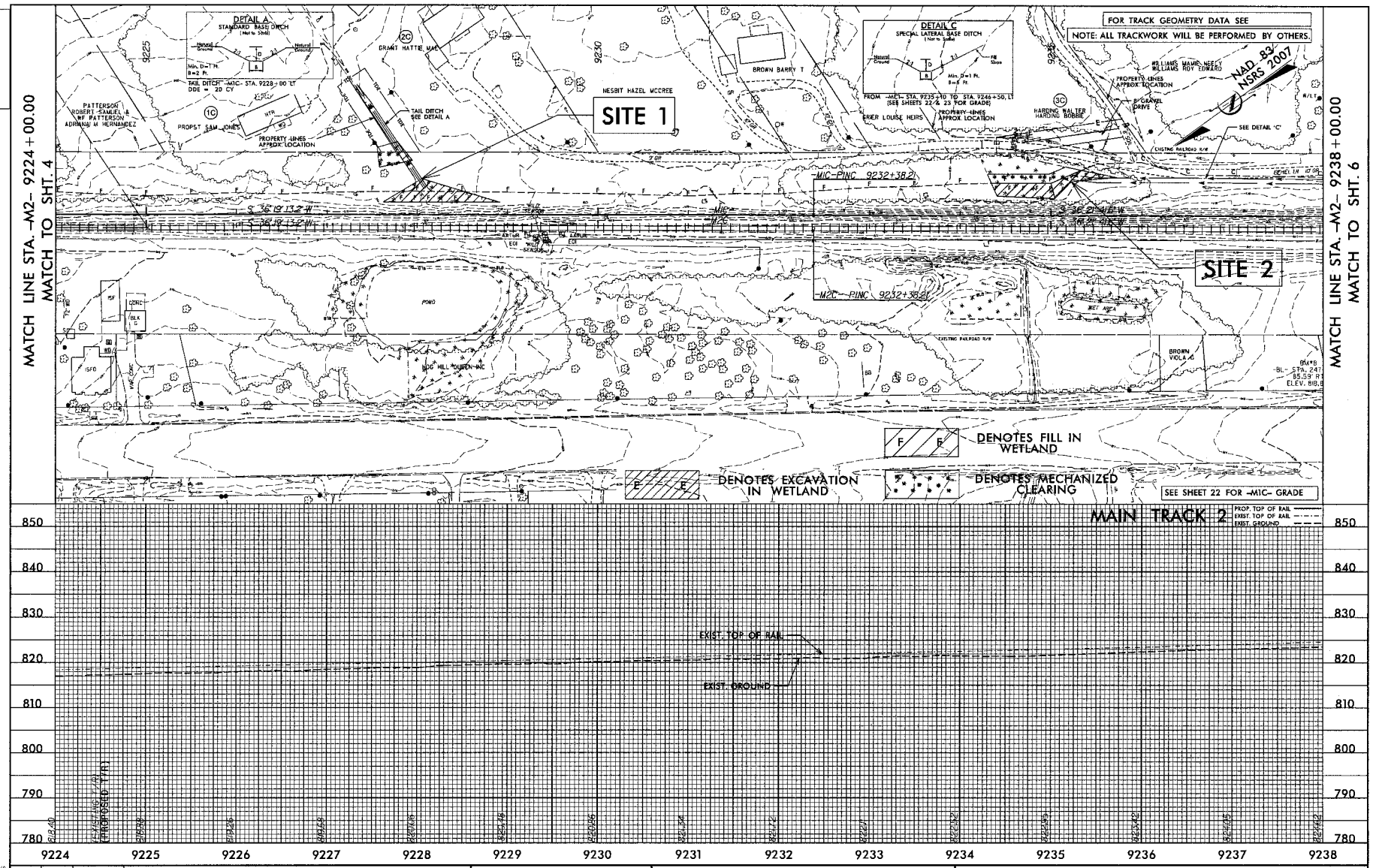

NO.	BY	DATE	REVISION

PRELIMINARY PLANS
DO NOT USE FOR CONSTRUCTION

NORTH CAROLINA DEPARTMENT OF TRANSPORTATION
RAIL DIVISION

PREPARED BY: TGS ENGINEERS
TGS ENGINEERS
804-C N. LAFAYETTE ST
SHELBY, NC 28150
PH (704) 476 0003
CORP. LICENSE NO.: C-0275

PROJECT	P-5206C – REID TO NORTH KANNAPOLIS
TITLE	ROADBED FROM -M2- STA. 9224+00.00 TO -M2- STA. 9238+00.00 & -M2- PROFILE
LOCATION	FROM MP 341 TO EAST OF MILE POST 345
MILE POST	MP 341 TO MP 345
DGN BY	JLT
RAILROAD	NORTH CAROLINA RR & NORFOLK SOUTHERN RR
DWN BY	SGM
VAL SEC	V-8/2
CHK BY	LGF
DATE	
SCALE	1" = 50' Horiz., 1" = 10' Vert.
DRAWING	5

R-66

0164DEL_P10b2

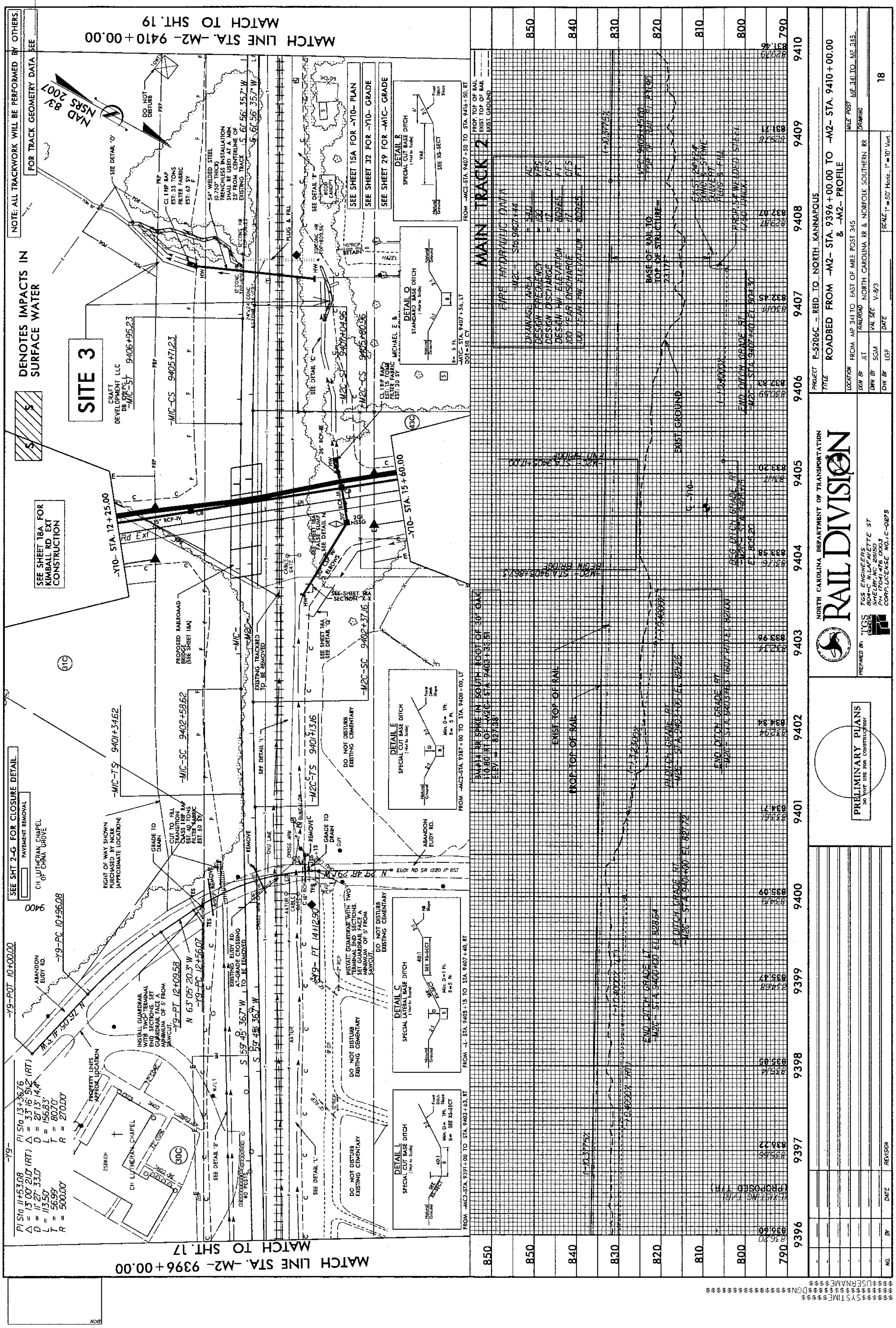

RIGHT OF WAY REVISIONS

DATE: NOVEMBER 19, 2012

NCDOT TO ACQUIRE RIGHT OF WAY ON PARCEL 32C FOR NCRR. NOTES REMOVED AND PERMANENT RAILROAD PROPERTY ADDED.

TDE AT STREAM OUTLET REVISED TO PDE AND REDUCED TO ELIMINATE PDE ON DUKE RIGHT OF WAY PER NCDOT RAIL DIVISION.

TEMPORARY CONSTRUCTION EASEMENT REVISED ON PARCEL 33C DUE TO ADDITION OF PROPOSED BERM DITCH.

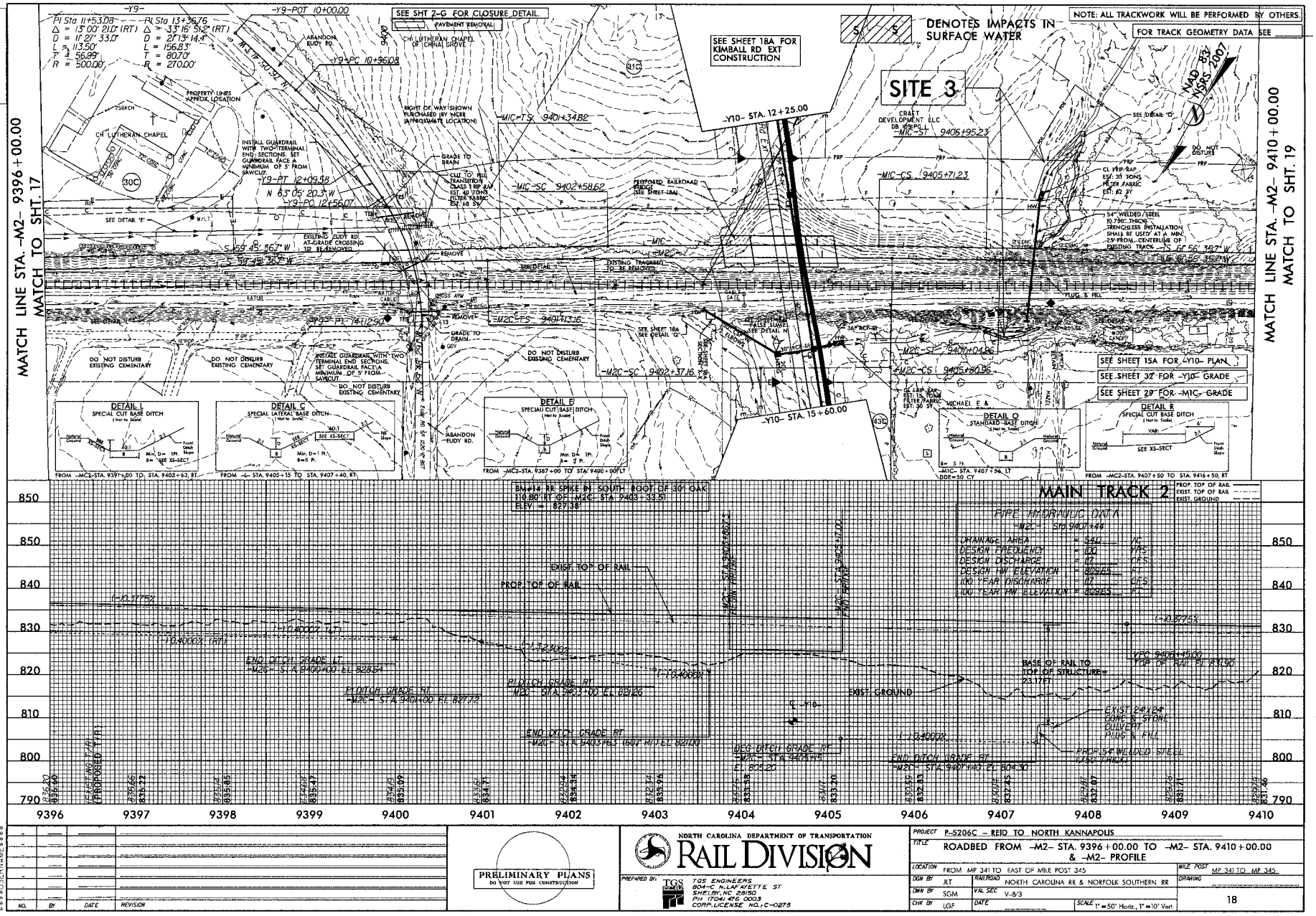

RIGHT OF WAY REVISIONS

DATE: NOVEMBER 19, 2012
NCDOT TO ACQUIRE RIGHT OF WAY ON PARCEL 32C FOR NCRR. NOTES REMOVED AND PERMANENT RAILROAD PROPERTY ADDED.
TDE AT STREAM OUTLET REVISED TO PDE AND REDUCED TO ELIMINATE PDE ON DUKE RIGHT OF WAY PER NCDOT RAIL DIVISION.
TEMPORARY CONSTRUCTION EASEMENT REVISED ON PARCEL 33C DUE TO ADDITION OF PROPOSED BERM DITCH.

NO.	BY	DATE	REVISION

PRELIMINARY PLANS
DO NOT USE FOR CONSTRUCTION

NORTH CAROLINA DEPARTMENT OF TRANSPORTATION
RAIL DIVISION

PREPARED BY: TGS ENGINEERS
804-C N. LAFAYETTE ST
SHELBY, NC 28150
PH: (704) 476 0003
CORP. LICENSE NO. C-0275

PROJECT: P-5206C – REID TO NORTH KANNAPOLIS
TITLE: ROADBED FROM -M2- STA. 9396+00.00 TO -M2- STA. 9410+00.00 & -M2- PROFILE
LOCATION: FROM MP 341 TO EAST OF MILE POST 345
MILE POST: MP 341 TO MP 345
DGN BY: JLT
DWN BY: SGM
CHK BY: LGF
RAILROAD: NORTH CAROLINA RR & NORFOLK SOUTHERN RR
VAL. SEC: V-8/3
DATE:
SCALE: 1" = 50' Horiz., 1" = 10' Vert.
DRAWING: 18

R-68

0164DEL_P10b2

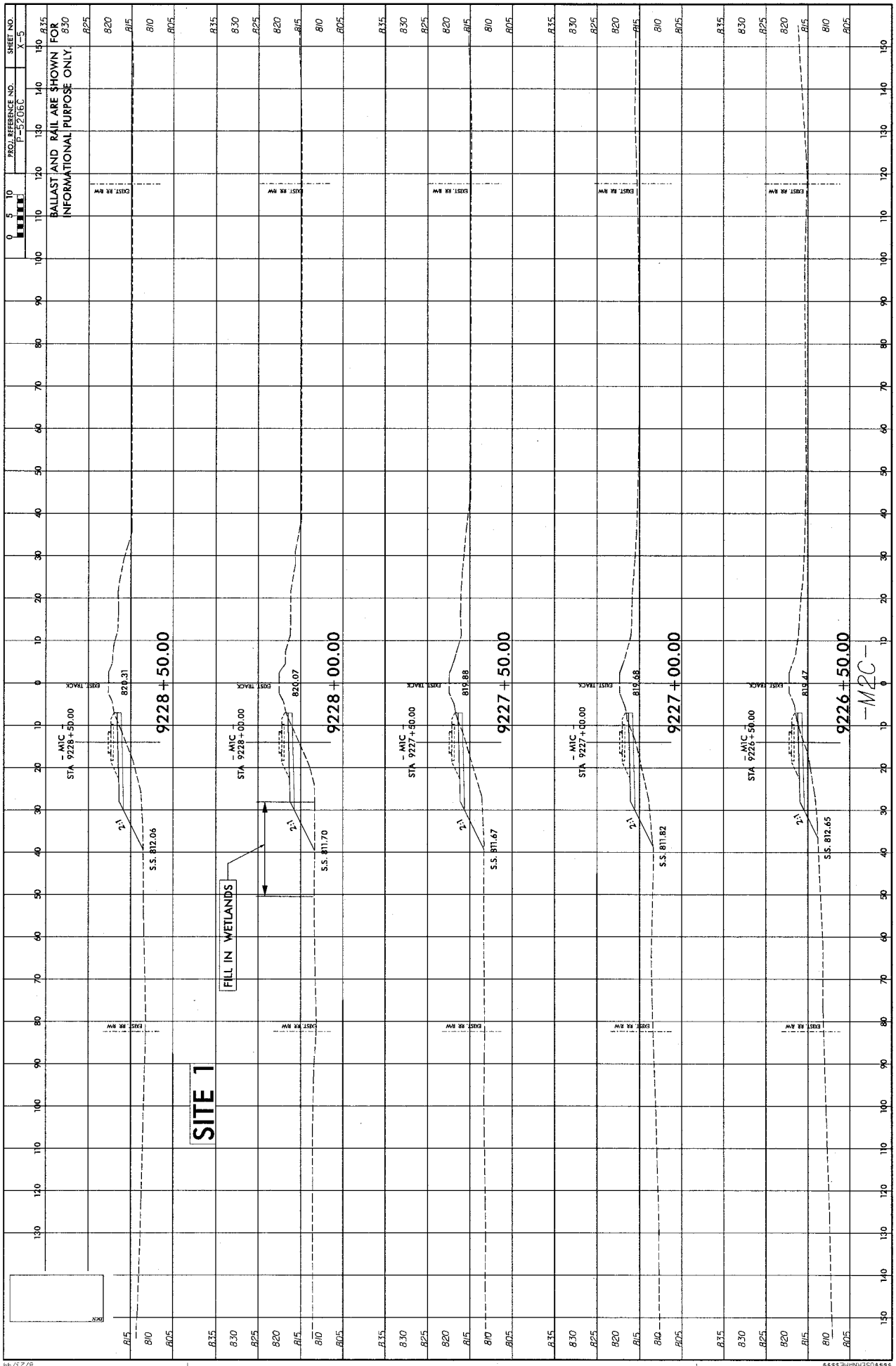
PROJ. REFERENCE NO.
P-5206C
SHEET NO.
X-5
BALLAST AND RAIL ARE SHOWN FOR INFORMATIONAL PURPOSE ONLY.
SITE 1
FILL IN WETLANDS
9228+50.00
9228+00.00
9227+50.00
9227+00.00
9226+50.00
STA 9228+50.00 - M1C
STA 9228+00.00 - M1C
STA 9227+50.00 - M1C
STA 9227+00.00 - M1C
STA 9226+50.00 - M1C
S.S. 812.06
S.S. 811.70
S.S. 811.67
S.S. 811.82
S.S. 812.65
820.31
820.07
819.88
819.68
819.47
EXIST. TRACK
EXIST. RR R/W
2:1
-MRC-

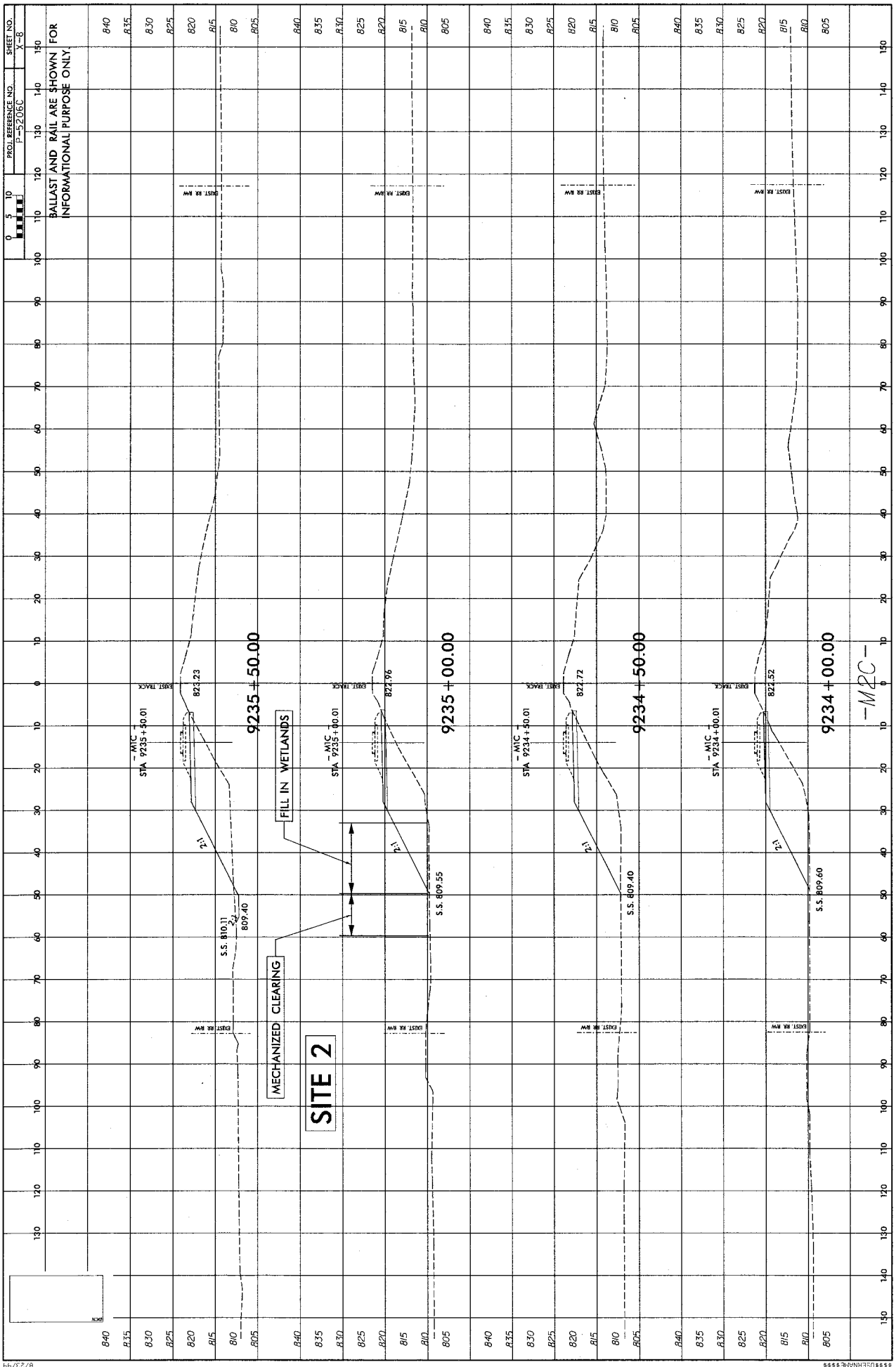
PROJ. REFERENCE NO.
P-5206C
SHEET NO.
X-8
BALLAST AND RAIL ARE SHOWN FOR INFORMATIONAL PURPOSE ONLY.
EAST. RR R/W
EAST. TRACK
M1C
STA 9235+50.01
822.23
9235+50.00
2:1
S.S. 810.11
809.40
FILL IN WETLANDS
MECHANIZED CLEARING
SITE 2
STA 9235+00.01
822.96
9235+00.00
S.S. 809.55
STA 9234+50.01
822.72
9234+50.00
S.S. 809.40
STA 9234+00.01
822.52
9234+00.00
S.S. 809.60
-M2C-

WETLAND PERMIT IMPACT SUMMARY

			WETLAND IMPACTS					SURFACE WATER IMPACTS				
Site No.	Station (From/To)	Structure Size / Type	Permanent Fill In Wetlands (ac)	Temp. Fill In Wetlands (ac)	Excavation in Wetlands (ac)	Mechanized Clearing in Wetlands (ac)	Hand Clearing in Wetlands (ac)	Permanent SW impacts (ac)	Temp. SW impacts (ac)	Existing Channel Impacts Permanent (ft)	Existing Channel Impacts Temp. (ft)	Natural Stream Design (ft)
1	9491+45 -M2D- RT	REALIGNED CHANNEL / FILL						0.02	<0.01	80	14	
2	9508+05 -M2D- RT	REALIGNED CHANNEL / FILL						<0.01	<0.01	55	5	
TOTALS:								0.02	<0.01	135	19	

NC DEPARTMENT OF TRANSPORTATION
RAIL DIVISION

ROWAN COUNTY
P-5206D

SHEET 2/15/2013

ATN Revised 3/31/05

R-71

0164DEL_P10b2

STATE	STATE PROJECT REFERENCE NO.	SHEET NO.	TOTAL SHEETS
N.C.	P-5206D	1	

STATE PROJ. NO.	F.A. PROJ. NO.	DESCRIPTION
52000.1.STR09T1B		P.E.

ENGLISH

STATE OF NORTH CAROLINA
NCDOT RAIL DIVISION

ROWAN COUNTY

LOCATION: *"REID" TO "NORTH KANNAPOLIS" ON THE NCRR/NS MAINLINE*

TYPE OF WORK: *CONSTRUCTION OF SECOND MAIN LINE TRACK AND CURVE AND SAFETY IMPROVEMENTS, DRAINAGE, PAVING, UTILITIES, AND SIGNALS*

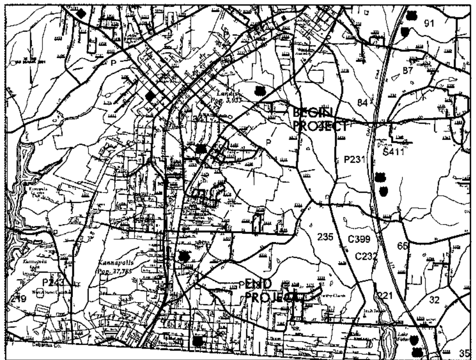

VICINITY MAP

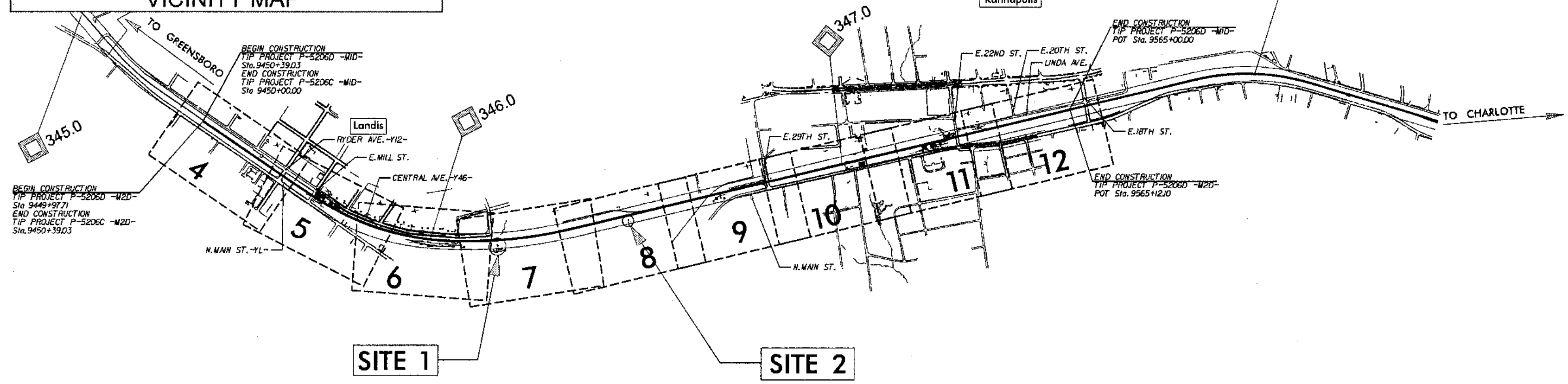

WETLAND AND SURFACE WATER IMPACTS PERMIT

INCOMPLETE PLANS
DO NOT USE FOR R/W ACQUISITION
PRELIMINARY PLANS
DO NOT USE FOR CONSTRUCTION

SUBMITTAL: PLFI
DATE: DECEMBER 11, 2012

THIS PROJECT IS WITHIN THE MUNICIPAL BOUNDARIES OF THE TOWN OF LANDIS AND CITY OF KANNAPOLIS.
CLEARING ON THIS PROJECT SHALL BE PERFORMED TO THE LIMITS ESTABLISHED BY METHOD III.

GRAPHIC SCALES
PLANS: 50 25 0 50 100
PROFILE (HORIZONTAL): 50 25 0 50 100
PROFILE (VERTICAL): 10 5 0 10 20

PROJECT LENGTH	
LENGTH OF RAIL TIP PROJECT	2.93 Miles
MAIN TRACK	2.93 Miles
OTHER THAN MAIN TRACK	0.0 Miles

CDM Smith
Camp Dresser & McKee
421 Fayetteville Street, Suite 1303
Raleigh, NC 27601 | Tel: (919) 755-0583
NC COA No. F-0412

Prepared in the Office of:
SUNGATE DESIGN GROUP, P.A.
915 JONES FRANKLIN ROAD
RALEIGH, NORTH CAROLINA 27606

2012 STANDARD SPECIFICATIONS

RIGHT OF WAY DATE: JULY 2012
LETTING DATE: JULY 2013

TODD H. BUCKNER, PE
PROJECT ENGINEER

TODD H. BUCKNER, PE
PROJECT DESIGN ENGINEER

RAIL ENGINEER
NORTH CAROLINA PROFESSIONAL SEAL 034367 ENGINEER TODD H. BUCKNER
SIGNATURE: P.E.

HYDRAULICS ENGINEER
NORTH CAROLINA PROFESSIONAL SEAL 9334 ENGINEER W. HENRY WELLS JR.
SIGNATURE: P.E.

NC DEPARTMENT OF TRANSPORTATION
RAIL DIVISION
ENGINEERING AND SAFETY BRANCH
CAPITAL YARD
1556 MAIL SERVICE CENTER
RALEIGH, NC 27699-1556

CONTRACT: 52000.1.STR09T1B TIP PROJECT: P-5206D

$$$$$$SYSTIME$$$$$
$$$$$$$$$$$$$$DGN$$$$$$$$$$$$$$$$$$$
$$$$USERNAME$$$$

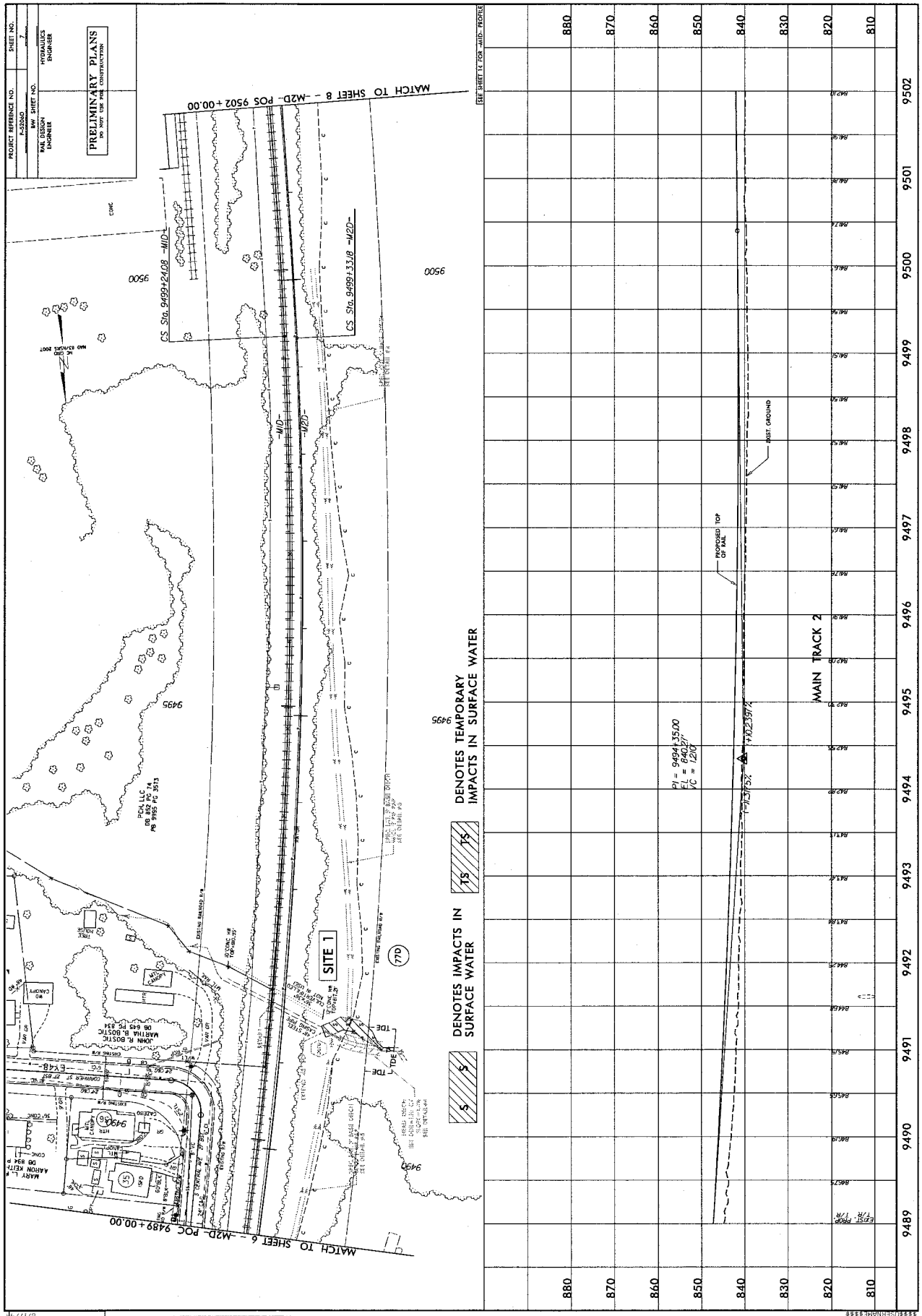
PRELIMINARY PLANS
DO NOT USE FOR CONSTRUCTION
PROJECT REFERENCE NO.
P-5200AD
SHEET NO.
7
RAIL DESIGN ENGINEER
HYDRAULICS ENGINEER
MATCH TO SHEET 8 - -M2D- POS 9502+00.00
MATCH TO SHEET 6 - -M2D- POC 9489+00.00
CS Sta. 9499+24.08 -M1D-
CS Sta. 9499+33.18 -M2D-
SITE 1
DENOTES IMPACTS IN SURFACE WATER
DENOTES TEMPORARY IMPACTS IN SURFACE WATER
MAIN TRACK 2
EXIST. GROUND
PROPOSED TOP OF RAIL
PI = 9494+35.00
EL = 840.27'
VC = 1210'
+1.31% +0.23% 7
SEE SHEET 14 FOR -M1D- PROFILE
9489
9490
9491
9492
9493
9494
9495
9496
9497
9498
9499
9500
9501
9502
880
870
860
850
840
830
820
810

PROJECT REFERENCE NO.
P-5200
SHEET NO.
7
R/W SHEET NO.
RAIL DESIGN ENGINEER
HYDRAULICS ENGINEER
PRELIMINARY PLANS
DO NOT USE FOR CONSTRUCTION
MATCH TO SHEET 8 - -M2D- POS 9502+00.00
MATCH TO SHEET 6 - -M2D- POC 9489+00.00
CS Sta. 9499+24.08 -M1D-
CS Sta. 9499+33.18 -M2D-
SITE 1
DENOTES TEMPORARY IMPACTS IN SURFACE WATER
DENOTES IMPACTS IN SURFACE WATER
SEE SHEET 14 FOR -M1D- PROFILE
PROPOSED TOP OF RAIL
EXIST. GROUND
MAIN TRACK 2
PI = 9494+35.00
EL = 840.27'
VC = 1210'
EXIST PROF F/R

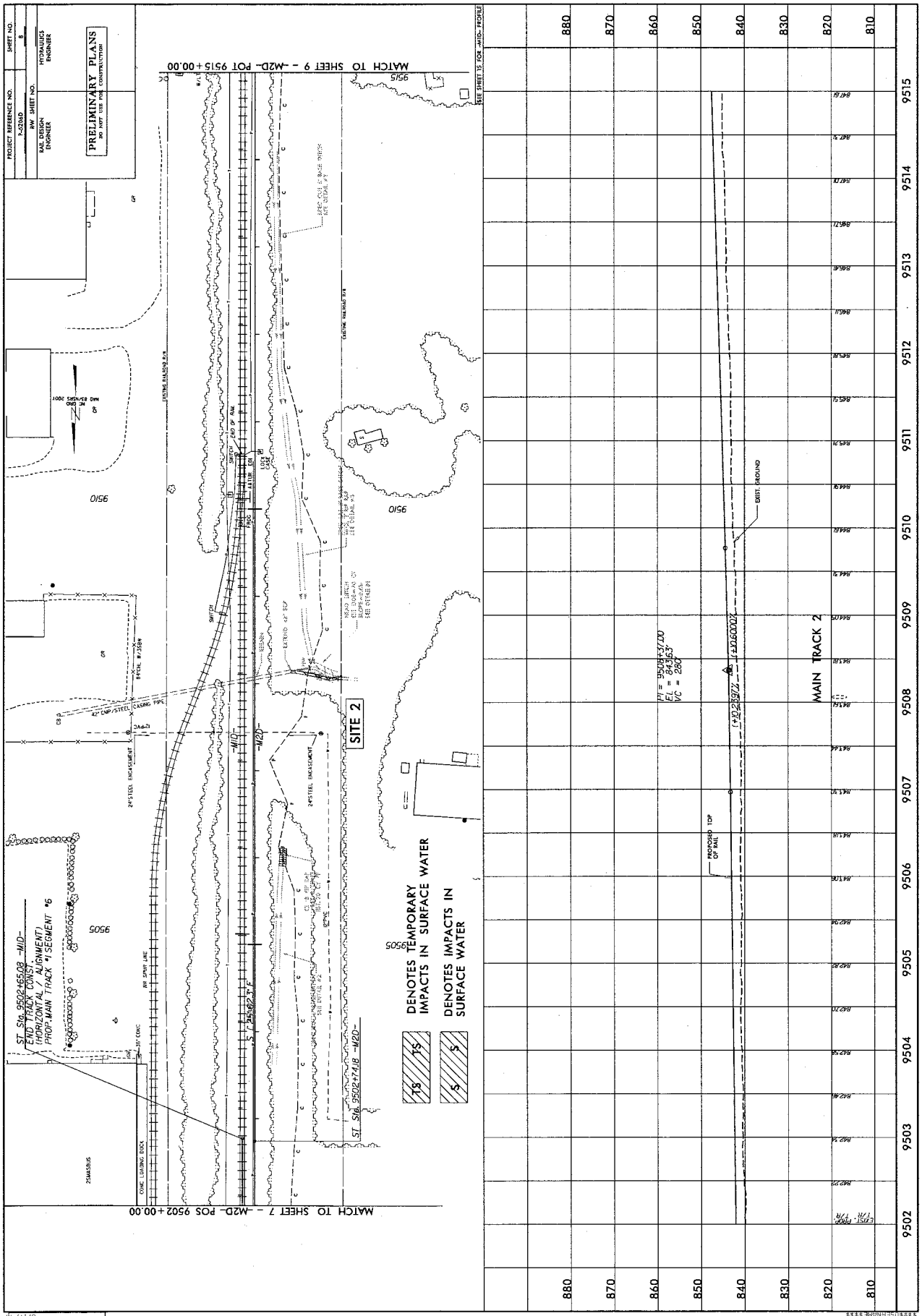
PRELIMINARY PLANS
MATCH TO SHEET 9 - -M2D- POT 9515+00.00
MATCH TO SHEET 7 - -M2D- POS 9502+00.00
SITE 2
DENOTES TEMPORARY IMPACTS IN SURFACE WATER
DENOTES IMPACTS IN SURFACE WATER
MAIN TRACK 2
EXIST. GROUND
PROPOSED TOP OF RAIL
9510
9505
9515
9514
9513
9512
9511
9509
9508
9507
9506
9504
9503
9502

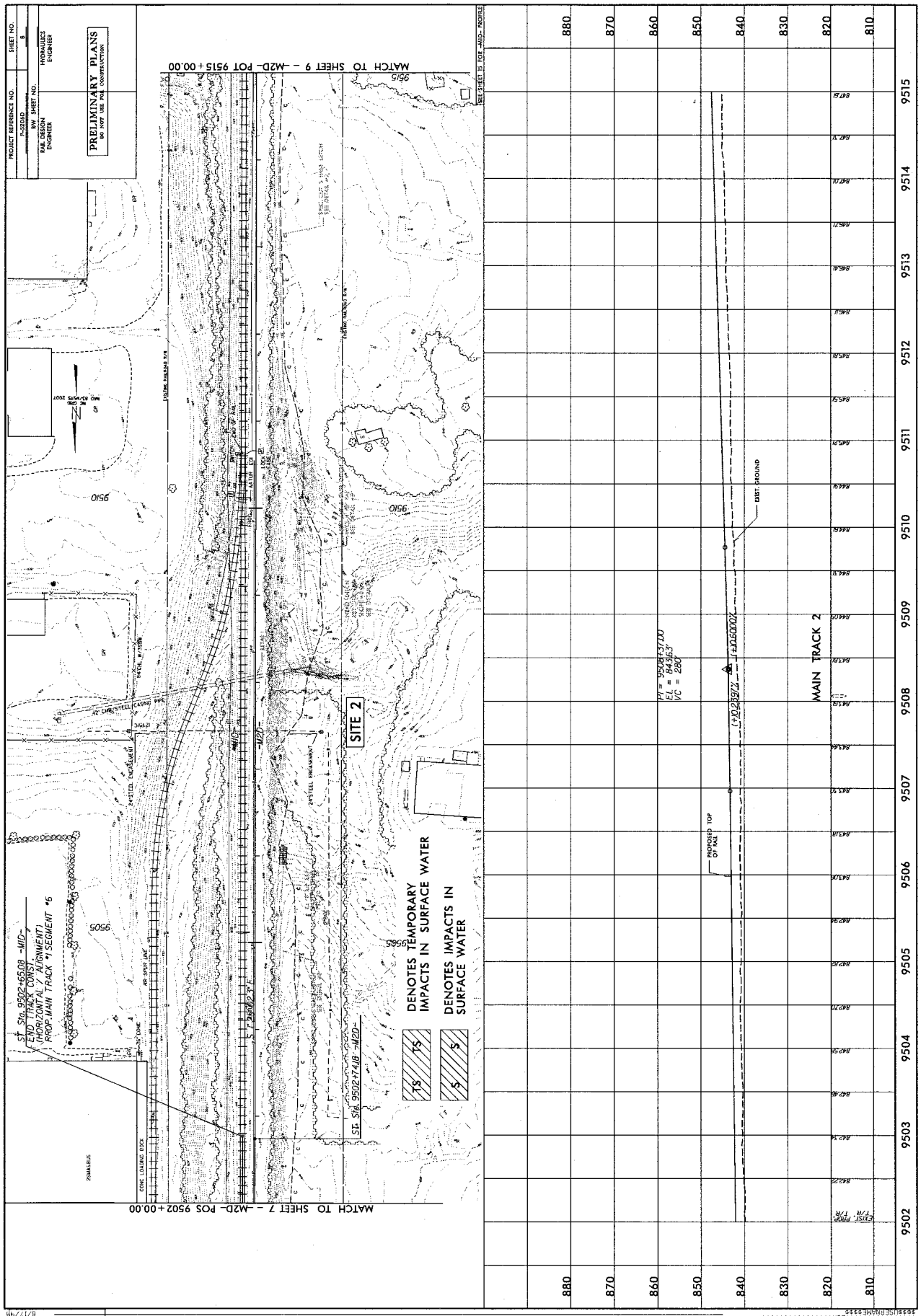
PRELIMINARY PLANS
DO NOT USE FOR CONSTRUCTION
MATCH TO SHEET 9 – MAD– POT 9515+00.00
MATCH TO SHEET 7 – MAD– POS 9502+00.00
SITE 2
DENOTES TEMPORARY IMPACTS IN SURFACE WATER
DENOTES IMPACTS IN SURFACE WATER
MAIN TRACK 2
EXIST. GROUND
PROPOSED TOP OF RAIL
PI = 9508+37.00
EL = 84.363'
VC = 280'
SEE SHEET 15 FOR –MID– PROFILE

STANDARD SPECIAL PROVISION
AVAILABILITY OF FUNDS – TERMINATION OF CONTRACTS

(5-20-08) Z-2

General Statute 143C-6-11. (h) Highway Appropriation is hereby incorporated verbatim in this contract as follows:

(h) Amounts Encumbered. – Transportation project appropriations may be encumbered in the amount of allotments made to the Department of Transportation by the Director for the estimated payments for transportation project contract work to be performed in the appropriation fiscal year. The allotments shall be multiyear allotments and shall be based on estimated revenues and shall be subject to the maximum contract authority contained in *General Statute 143C-6-11(c)*. Payment for transportation project work performed pursuant to contract in any fiscal year other than the current fiscal year is subject to appropriations by the General Assembly. Transportation project contracts shall contain a schedule of estimated completion progress, and any acceleration of this progress shall be subject to the approval of the Department of Transportation provided funds are available. The State reserves the right to terminate or suspend any transportation project contract, and any transportation project contract shall be so terminated or suspended if funds will not be available for payment of the work to be performed during that fiscal year pursuant to the contract. In the event of termination of any contract, the contractor shall be given a written notice of termination at least 60 days before completion of scheduled work for which funds are available. In the event of termination, the contractor shall be paid for the work already performed in accordance with the contract specifications.

Payment will be made on any contract terminated pursuant to the special provision in accordance with Subarticle 108-13(E) of the *2012 Standard Specifications*.

STANDARD SPECIAL PROVISION
NCDOT GENERAL SEED SPECIFICATION FOR SEED QUALITY

(5-17-11) Z-3

Seed shall be sampled and tested by the North Carolina Department of Agriculture and Consumer Services, Seed Testing Laboratory. When said samples are collected, the vendor shall supply an independent laboratory report for each lot to be tested. Results from seed so sampled shall be final. Seed not meeting the specifications shall be rejected by the Department of Transportation and shall not be delivered to North Carolina Department of Transportation warehouses. If seed has been delivered it shall be available for pickup and replacement at the supplier's expense.

Any re-labeling required by the North Carolina Department of Agriculture and Consumer Services, Seed Testing Laboratory, that would cause the label to reflect as otherwise specified herein shall be rejected by the North Carolina Department of Transportation.

Seed shall be free from seeds of the noxious weeds Johnsongrass, Balloonvine, Jimsonweed, Witchweed, Itchgrass, Serrated Tussock, Showy Crotalaria, Smooth Crotalaria, Sicklepod, Sandbur, Wild Onion, and Wild Garlic. Seed shall not be labeled with the above weed species on the seed analysis label. Tolerances as applied by the Association of Official Seed Analysts will NOT be allowed for the above noxious weeds except for Wild Onion and Wild Garlic.

Tolerances established by the Association of Official Seed Analysts will generally be recognized. However, for the purpose of figuring pure live seed, the found pure seed and found germination percentages as reported by the North Carolina Department of Agriculture and Consumer Services, Seed Testing Laboratory will be used. Allowances, as established by the NCDOT, will be recognized for minimum pure live seed as listed on the following pages.

The specifications for restricted noxious weed seed refers to the number per pound as follows:

Restricted Noxious **Weed**	Limitations per Lb. Of Seed	Restricted Noxious **Weed**	Limitations per Lb. of Seed
Blessed Thistle	4 seeds	Cornflower (Ragged Robin)	27 seeds
Cocklebur	4 seeds	Texas Panicum	27 seeds
Spurred Anoda	4 seeds	Bracted Plantain	54 seeds
Velvetleaf	4 seeds	Buckhorn Plantain	54 seeds
Morning-glory	8 seeds	Broadleaf Dock	54 seeds
Corn Cockle	10 seeds	Curly Dock	54 seeds
Wild Radish	12 seeds	Dodder	54 seeds
Purple Nutsedge	27 seeds	Giant Foxtail	54 seeds
Yellow Nutsedge	27 seeds	Horsenettle	54 seeds
Canada Thistle	27 seeds	Quackgrass	54 seeds
Field Bindweed	27 seeds	Wild Mustard	54 seeds
Hedge Bindweed	27 seeds		

Seed of Pensacola Bahiagrass shall not contain more than 7% inert matter, Kentucky Bluegrass, Centipede and Fine or Hard Fescue shall not contain more than 5% inert matter whereas a maximum of 2% inert matter will be allowed on all other kinds of seed. In addition, all seed shall not contain more than 2% other crop seed nor more than 1% total weed seed. The germination rate as tested by the North Carolina Department of Agriculture shall not fall below 70%, which includes both dormant and hard seed. Seed shall be labeled with not more than 7%, 5% or 2% inert matter (according to above specifications), 2% other crop seed and 1% total weed seed.

Exceptions may be made for minimum pure live seed allowances when cases of seed variety shortages are verified. Pure live seed percentages will be applied in a verified shortage situation. Those purchase orders of deficient seed lots will be credited with the percentage that the seed is deficient.

FURTHER SPECIFICATIONS FOR EACH SEED GROUP ARE GIVEN BELOW:

Minimum 85% pure live seed; maximum 1% total weed seed; maximum 2% total other crop seed; maximum 144 restricted noxious weed seed per pound. Seed less than 83% pure live seed will not be approved.

Sericea Lespedeza
Oats (seeds)

Minimum 80% pure live seed; maximum 1% total weed seed; maximum 2% total other crop; maximum 144 restricted noxious weed seed per pound. Seed less than 78% pure live seed will not be approved.

Tall Fescue (all approved varieties)
Kobe Lespedeza
Korean Lespedeza
Weeping Lovegrass
Carpetgrass
Bermudagrass
Browntop Millet
German Millet – Strain R
Clover – Red/White/Crimson

Minimum 78% pure live seed; maximum 1% total weed seed; maximum 2% total other crop seed; maximum 144 restricted noxious weed seed per pound. Seed less than 76% pure live seed will not be approved.

Common or Sweet Sundangrass

Minimum 76% pure live seed; maximum 1% total weed seed; maximum 2% total other crop seed; maximum 144 restricted noxious weed seed per pound. Seed less than 74% pure live seed will not be approved.

Rye (grain; all varieties)
Kentucky Bluegrass (all approved varieties)
Hard Fescue (all approved varieties)
Shrub (bicolor) Lespedeza

Minimum 70% pure live seed; maximum 1% total weed seed; maximum 2% total other crop seed; maximum 144 noxious weed seed per pound. Seed less than 70% pure live seed will not be approved.

Centipedegrass
Crownvetch
Pensacola Bahiagrass
Creeping Red Fescue
Japanese Millet
Reed Canary Grass
Zoysia

Minimum 70% pure live seed; maximum 1% total weed seed; maximum 2% total other crop seed; maximum 5% inert matter; maximum 144 restricted noxious weed seed per pound.

Barnyard Grass
Big Bluestem
Little Bluestem
Bristly Locust
Birdsfoot Trefoil
Indiangrass
Orchardgrass
Switchgrass
Yellow Blossom Sweet Clover

STANDARD SPECIAL PROVISION

ERRATA

(1-17-12) (Rev. 10-15-13) Z-4

Revise the *2012 Standard Specifications* as follows:

Division 2

Page 2-7, line 31, Article 215-2 Construction Methods, replace "Article 107-26" with "Article 107-25".

Page 2-17, Article 226-3, Measurement and Payment, line 2, delete "pipe culverts,".

Page 2-20, Subarticle 230-4(B), Contractor Furnished Sources, change references as follows: Line 1, replace "(4) Buffer Zone" with "(c) Buffer Zone"; **Line 12,** replace "(5) Evaluation for Potential Wetlands and Endangered Species" with "(d) Evaluation for Potential Wetlands and Endangered Species"; and **Line 33,** replace "(6) Approval" with "(4) Approval".

Division 4

Page 4-77, line 27, Subarticle 452-3(C) Concrete Coping, replace "sheet pile" with "reinforcement".

Division 6

Page 6-7, line 31, Article 609-3 Field Verification of Mixture and Job Mix Formula Adjustments, replace "30" with "45".

Page 6-10, line 42, Subarticle 609-6(C)(2), replace "Subarticle 609-6(E)" with "Subarticle 609-6(D)".

Page 6-11, Table 609-1 Control Limits, replace "Max. Spec. Limit" for the Target Source of $P_{0.075}/P_{be}$ Ratio with "1.0".

Page 6-40, Article 650-2 Materials, replace "Subarticle 1012-1(F)" with "Subarticle 1012-1(E)"

Division 8

Page 8-23, line 10, Article 838-2 Materials, replace "Portland Cement Concrete, Class B" with "Portland Cement Concrete, Class A".

Division 10

Page 10-74, Table 1056-1 Geotextile Requirements, replace "50%" for the UV Stability (Retained Strength) of Type 5 geotextiles with "70%".

Division 12

Page 12-7, Table 1205-3, add "FOR THERMOPLASTIC" to the end of the title.

Page 12-8, Subarticle 1205-5(B), line 13, replace "Table 1205-2" with "Table 1205-4".

Page 12-8, Table 1205-4 and 1205-5, replace "THERMOPLASTIC" in the title of these tables with "POLYUREA".

Page 12-9, Subarticle 1205-6(B), line 21, replace "Table 1205-4" with "Table 1205-6".

Page 12-11, Subarticle 1205-8(C), line 25, replace "Table 1205-5" with "Table 1205-7".

Division 15

Page 15-4, Subarticle 1505-3(F) Backfilling, line 26, replace "Subarticle 235-4(C)" with "Subarticle 235-3(C)".

Page 15-6, Subarticle 1510-3(B), after line 21, replace the allowable leakage formula with the following: $\boldsymbol{W = LD\sqrt{P} \div 148,000}$

Page 15-6, Subarticle 1510-3(B), line 32, delete "may be performed concurrently or" and replace with "shall be performed".

Page 15-17, Subarticle 1540-3(E), line 27, delete "Type 1".

Division 17

Page 17-26, line 42, Subarticle 1731-3(D) Termination and Splicing within Interconnect Center, delete this subarticle.

Revise the *2012 Roadway Standard Drawings* as follows:

1633.01 Sheet 1 of 1, English Standard Drawing for Matting Installation, replace "1633.01" with "1631.01".

STANDARD SPECIAL PROVISION

PLANT AND PEST QUARANTINES
(Imported Fire Ant, Gypsy Moth, Witchweed, And Other Noxious Weeds)

(3-18-03) (Rev. 10-15-13) Z-04a

Within Quarantined Area

This project may be within a county regulated for plant and/or pests. If the project or any part of the Contractor's operations is located within a quarantined area, thoroughly clean all equipment prior to moving out of the quarantined area. Comply with federal/state regulations by obtaining a certificate or limited permit for any regulated article moving from the quarantined area.

Originating in a Quarantined County

Obtain a certificate or limited permit issued by the N.C. Department of Agriculture/United States Department of Agriculture. Have the certificate or limited permit accompany the article when it arrives at the project site.

Contact

Contact the N.C. Department of Agriculture/United States Department of Agriculture at 1-800-206-9333, 919-733-6932, or *http://www.ncagr.gov/plantind/* to determine those specific project sites located in the quarantined area or for any regulated article used on this project originating in a quarantined county.

Regulated Articles Include

1. Soil, sand, gravel, compost, peat, humus, muck, and decomposed manure, separately or with other articles. This includes movement of articles listed above that may be associated with cut/waste, ditch pulling, and shoulder cutting.
2. Plants with roots including grass sod.
3. Plant crowns and roots.
4. Bulbs, corms, rhizomes, and tubers of ornamental plants.
5. Hay, straw, fodder, and plant litter of any kind.
6. Clearing and grubbing debris.
7. Used agricultural cultivating and harvesting equipment.
8. Used earth-moving equipment.
9. Any other products, articles, or means of conveyance, of any character, if determined by an inspector to present a hazard of spreading imported fire ant, gypsy moth, witchweed or other noxious weeds.

STANDARD SPECIAL PROVISION

AWARD OF CONTRACT

(6-28-77) Z-6

"The North Carolina Department of Transportation, in accordance with the provisions of *Title VI of the Civil Rights Act of 1964* (78 Stat. 252) and the Regulations of the Department of Transportation (*49 C.F.R., Part 21*), issued pursuant to such act, hereby notifies all bidders that it will affirmatively insure that the contract entered into pursuant to this advertisement will be awarded to the lowest responsible bidder without discrimination on the ground of race, color, or national origin".

STANDARD SPECIAL PROVISION

MINORITY AND FEMALE EMPLOYMENT REQUIREMENTS

Z-7

NOTICE OF REQUIREMENTS FOR AFFIRMATIVE ACTION TO ENSURE EQUAL EMPLOYMENT OPPORTUNITY (*EXECUTIVE NUMBER 11246*)

1. The goals and timetables for minority and female participation, expressed in percentage terms for the Contractor's aggregate workforce in each trade on all construction work in the covered area, see as shown on the attached sheet entitled "Employment Goals for Minority and Female participation".

These goals are applicable to all the Contractor's construction work (whether or not it is Federal or federally assisted) performed in the covered area. If the Contractor performs construction work in a geographical area located outside of the covered area, it shall apply the goals established for such geographical area where the work is actually performed. With regard to this second area, the Contractor also is subject to the goals for both its federally involved and nonfederally involved construction.

The Contractor's compliance with the Executive Order and the regulations in *41 CFR Part 60-4* shall be based on its implementation of the Equal Opportunity Clause, specific affirmative action obligations required by the specifications set forth in *41 CFR 60-4.3(a)*, and its effort to meet the goals. The hours of minority and female employment and training must be substantially uniform throughout the length of the contract, and in each trade and the Contractor shall make a good faith effort to employ minorities and women evenly on each of its projects. The transfer of minority or female employees or trainees from Contractor to Contractor or from project to project or the sole purpose of meeting the Contractor's goals shall be a violation of the contract, the executive Order and the regulations *in 41 CFR Part 60-4*. Compliance with the goals will be measured against the total work hours performed.

2. As used in this Notice and in the contract resulting from this solicitation, the "covered area" is the county or counties shown on the cover sheet of the proposal form and contract.

EMPLOYMENT GOALS FOR MINORITY AND FEMALE PARTICIPATION

Economic Areas

Area 023 29.7%
Bertie County
Camden County
Chowan County
Gates County
Hertford County
Pasquotank County
Perquimans County

Area 024 31.7%
Beaufort County
Carteret County
Craven County
Dare County
Edgecombe County
Green County
Halifax County
Hyde County
Jones County
Lenoir County
Martin County
Nash County
Northampton County
Pamlico County
Pitt County
Tyrrell County
Washington County
Wayne County
Wilson County

Area 025 23.5%
Columbus County
Duplin County
Onslow County
Pender County

Area 026 33.5%
Bladen County
Hoke County
Richmond County
Robeson County
Sampson County
Scotland County

Area 027 24.7%
Chatham County
Franklin County
Granville County
Harnett County
Johnston County
Lee County
Person County
Vance County
Warren County

Area 028 15.5%
Alleghany County
Ashe County
Caswell County
Davie County
Montgomery County
Moore County
Rockingham County
Surry County
Watauga County
Wilkes County

Area 029 15.7%
Alexander County
Anson County
Burke County
Cabarrus County
Caldwell County
Catawba County
Cleveland County
Iredell County
Lincoln County
Polk County
Rowan County
Rutherford County
Stanly County

Area 0480 8.5%
Buncombe County
Madison County

Area 030 6.3%
Avery County
Cherokee County
Clay County
Graham County
Haywood County
Henderson County
Jackson County
McDowell County
Macon County
Mitchell County
Swain County
Transylvania County
Yancey County

SMSA Areas

Area 5720 26.6%
Currituck County

Area 9200 20.7%
Brunswick County
New Hanover County

Area 2560 24.2%
Cumberland County

Area 6640 22.8%
Durham County
Orange County
Wake County

Area 1300 16.2%
Alamance County

Area 3120 16.4%
Davidson County
Forsyth County
Guilford County
Randolph County
Stokes County
Yadkin County

Area 1520 18.3%
Gaston County
Mecklenburg County
Union County

Goals for Female

Participation in Each Trade

(Statewide) 6.9%

STANDARD SPECIAL PROVISION

REQUIRED CONTRACT PROVISIONS FEDERAL - AID CONSTRUCTION CONTRACTS

FHWA - 1273 Electronic Version - May 1, 2012 Z-8

I. General
II. Nondiscrimination
III. Nonsegregated Facilities
IV. Davis-Bacon and Related Act Provisions
V. Contract Work Hours and Safety Standards Act Provisions
VI. Subletting or Assigning the Contract
VII. Safety: Accident Prevention
VIII. False Statements Concerning Highway Projects
IX. Implementation of Clean Air Act and Federal Water Pollution Control Act
X. Compliance with Governmentwide Suspension and Debarment Requirements
XI. Certification Regarding Use of Contract Funds for Lobbying

ATTACHMENTS

A. Employment and Materials Preference for Appalachian Development Highway System or Appalachian Local Access Road Contracts (included in Appalachian contracts only)

I. GENERAL

1. Form FHWA-1273 must be physically incorporated in each construction contract funded under Title 23 (excluding emergency contracts solely intended for debris removal). The contractor (or subcontractor) must insert this form in each subcontract and further require its inclusion in all lower tier subcontracts (excluding purchase orders, rental agreements and other agreements for supplies or services).

   The applicable requirements of Form FHWA-1273 are incorporated by reference for work done under any purchase order, rental agreement or agreement for other services. The prime contractor shall be responsible for compliance by any subcontractor, lower-tier subcontractor or service provider.

   Form FHWA-1273 must be included in all Federal-aid design-build contracts, in all subcontracts and in lower tier subcontracts (excluding subcontracts for design services, purchase orders, rental agreements and other agreements for supplies or services). The design-builder shall be responsible for compliance by any subcontractor, lower-tier subcontractor or service provider.

   Contracting agencies may reference Form FHWA-1273 in bid proposal or request for proposal documents, however, the Form FHWA-1273 must be physically incorporated (not referenced) in all contracts, subcontracts and lower-tier subcontracts (excluding purchase orders, rental agreements and other agreements for supplies or services related to a construction contract).
2. Subject to the applicability criteria noted in the following sections, these contract provisions shall apply to all work performed on the contract by the contractor's own organization and with the assistance of workers under the contractor's immediate superintendence and to all work performed on the contract by piecework, station work, or by subcontract.
3. A breach of any of the stipulations contained in these Required Contract Provisions may be sufficient grounds for withholding of progress payments, withholding of final payment, termination of the contract, suspension / debarment or any other action determined to be appropriate by the contracting agency and FHWA.
4. Selection of Labor: During the performance of this contract, the contractor shall not use convict labor for any purpose within the limits of a construction project on a Federal-aid highway unless it is labor performed by convicts who are on parole, supervised release, or probation. The term Federal-aid highway does not include roadways functionally classified as local roads or rural minor collectors.

II. NONDISCRIMINATION

The provisions of this section related to 23 CFR Part 230 are applicable to all Federal-aid construction contracts and to all related construction subcontracts of $10,000 or more. The provisions of 23 CFR Part 230 are not applicable to material supply, engineering, or architectural service contracts.

In addition, the contractor and all subcontractors must comply with the following policies: Executive Order 11246, 41 CFR 60, 29 CFR 1625-1627, Title 23 USC Section 140, the Rehabilitation Act of 1973, as amended (29 USC 794), Title VI of the Civil Rights Act of 1964, as amended, and related regulations including 49 CFR Parts 21, 26 and 27; and 23 CFR Parts 200, 230, and 633.

The contractor and all subcontractors must comply with: the requirements of the Equal Opportunity Clause in 41 CFR 60-1.4(b) and, for all construction contracts exceeding $10,000, the Standard Federal Equal Employment Opportunity Construction Contract Specifications in 41 CFR 60-4.3.

Note: The U.S. Department of Labor has exclusive authority to determine compliance with Executive Order 11246 and the policies of the Secretary of Labor including 41 CFR 60, and 29 CFR 1625-1627. The contracting agency and the FHWA have the authority and the responsibility to ensure compliance with Title 23 USC Section 140, the Rehabilitation Act of 1973, as amended (29 USC 794), and Title VI of the Civil Rights Act of 1964, as amended, and related regulations including 49 CFR Parts 21, 26 and 27; and 23 CFR Parts 200, 230, and 633.

The following provision is adopted from 23 CFR 230, Appendix A, with appropriate revisions to conform to the U.S. Department of Labor (US DOL) and FHWA requirements.

1. **Equal Employment Opportunity:** Equal employment opportunity (EEO) requirements not to discriminate and to take affirmative action to assure equal opportunity as set forth under laws, executive orders, rules, regulations (28 CFR 35, 29 CFR 1630, 29 CFR 1625-1627, 41 CFR 60 and 49 CFR 27) and orders of the Secretary of Labor as modified by the provisions prescribed herein, and imposed pursuant to 23 U.S.C. 140 shall constitute the EEO and specific affirmative action standards for the contractor's project activities under this contract. The provisions of the Americans with Disabilities Act of 1990 (42 U.S.C. 12101 et seq.) set forth under 28 CFR 35 and 29 CFR 1630 are

incorporated by reference in this contract. In the execution of this contract, the contractor agrees to comply with the following minimum specific requirement activities of EEO:

a. The contractor will work with the contracting agency and the Federal Government to ensure that it has made every good faith effort to provide equal opportunity with respect to all of its terms and conditions of employment and in their review of activities under the contract.
b. The contractor will accept as its operating policy the following statement:
"It is the policy of this Company to assure that applicants are employed, and that employees are treated during employment, without regard to their race, religion, sex, color, national origin, age or disability. Such action shall include: employment, upgrading, demotion, or transfer; recruitment or recruitment advertising; layoff or termination; rates of pay or other forms of compensation; and selection for training, including apprenticeship, pre-apprenticeship, and/or on-the-job training."

2. **EEO Officer:** The contractor will designate and make known to the contracting officers an EEO Officer who will have the responsibility for and must be capable of effectively administering and promoting an active EEO program and who must be assigned adequate authority and responsibility to do so.
3. **Dissemination of Policy:** All members of the contractor's staff who are authorized to hire, supervise, promote, and discharge employees, or who recommend such action, or who are substantially involved in such action, will be made fully cognizant of, and will implement, the contractor's EEO policy and contractual responsibilities to provide EEO in each grade and classification of employment. To ensure that the above agreement will be met, the following actions will be taken as a minimum:
   a. Periodic meetings of supervisory and personnel office employees will be conducted before the start of work and then not less often than once every six months, at which time the contractor's EEO policy and its implementation will be reviewed and explained. The meetings will be conducted by the EEO Officer.
   b. All new supervisory or personnel office employees will be given a thorough indoctrination by the EEO Officer, covering all major aspects of the contractor's EEO obligations within thirty days following their reporting for duty with the contractor.
   c. All personnel who are engaged in direct recruitment for the project will be instructed by the EEO Officer in the contractor's procedures for locating and hiring minorities and women.
   d. Notices and posters setting forth the contractor's EEO policy will be placed in areas readily accessible to employees, applicants for employment and potential employees.
   e. The contractor's EEO policy and the procedures to implement such policy will be brought to the attention of employees by means of meetings, employee handbooks, or other appropriate means.
4. **Recruitment:** When advertising for employees, the contractor will include in all advertisements .for employees the notation: "An Equal Opportunity Employer." All such advertisements will be placed in publications having a large circulation among minorities and women in the area from which the project work force would normally be derived.
   a. The contractor will, unless precluded by a valid bargaining agreement, conduct systematic and direct recruitment through public and private employee referral sources likely to yield qualified minorities and women. To meet this requirement, the contractor will identify sources of potential minority group employees, and establish with such identified sources procedures whereby minority and women applicants may be referred to the contractor for employment consideration.
   b. In the event the contractor has a valid bargaining agreement providing for exclusive hiring hall referrals, the contractor is expected to observe the provisions of that agreement to the extent that the system meets the contractor's compliance with EEO contract provisions. Where implementation of such an agreement has the effect of discriminating against minorities or women, or obligates the contractor to do the same, such implementation violates Federal nondiscrimination provisions.
   c. The contractor will encourage its present employees to refer minorities and women as applicants for employment. Information and procedures with regard to referring such applicants will be discussed with employees.
5. **Personnel Actions:** Wages, working conditions, and employee benefits shall be established and administered, and personnel actions of every type, including hiring, upgrading, promotion, transfer, demotion, layoff, and termination, shall be taken without regard to race, color, religion, sex, national origin, age or disability. The following procedures shall be followed:
   a. The contractor will conduct periodic inspections of project sites to insure that working conditions and employee facilities do not indicate discriminatory treatment of project site personnel.
   b. The contractor will periodically evaluate the spread of wages paid within each classification to determine any evidence of discriminatory wage practices.
   c. The contractor will periodically review selected personnel actions in depth to determine whether there is evidence of discrimination. Where evidence is found, the contractor will promptly take corrective action. If the review indicates that the discrimination may extend beyond the actions reviewed, such corrective action shall include all affected persons.
   d. The contractor will promptly investigate all complaints of alleged discrimination made to the contractor in connection with its obligations under this contract, will attempt to resolve such complaints, and will take appropriate corrective action within a reasonable time. If the investigation indicates that the discrimination may affect persons other than the complainant, such corrective action shall include such other persons. Upon completion of each investigation, the contractor will inform every complainant of all of their avenues of appeal.
6. **Training and Promotion:**
   a. The contractor will assist in locating, qualifying, and increasing the skills of minorities and women who are applicants for employment or current employees. Such efforts should be aimed at developing full journey level status employees in the type of trade or job classification involved.
   b. Consistent with the contractor's work force requirements and as permissible under Federal and State regulations, the contractor shall make full use of training programs, i.e., apprenticeship, and on-the-job training programs for the geographical area of contract performance. In the event a special provision for training is provided under this contract, this subparagraph will be superseded as indicated in the special provision. The contracting agency may reserve training positions for persons who receive welfare assistance in accordance with 23 U.S.C. 140(a).
   c The contractor will advise employees and applicants for employment of available training programs and entrance requirements for each.
   d. The contractor will periodically review the training and promotion potential of employees who are minorities and women and will encourage eligible employees to apply for such training and promotion.

7. **Unions:** If the contractor relies in whole or in part upon unions as a source of employees, the contractor will use good faith efforts to obtain the cooperation of such unions to increase opportunities for minorities and women. Actions by the contractor, either directly or through a contractor's association acting as agent, will include the procedures set forth below:
   a. The contractor will use good faith efforts to develop, in cooperation with the unions, joint training programs aimed toward qualifying more minorities and women for membership in the unions and increasing the skills of minorities and women so that they may qualify for higher paying employment.
   b. The contractor will use good faith efforts to incorporate an EEO clause into each union agreement to the end that such union will be contractually bound to refer applicants without regard to their race, color, religion, sex, national origin, age or disability.
   c. The contractor is to obtain information as to the referral practices and policies of the labor union except that to the extent such information is within the exclusive possession of the labor union and such labor union refuses to furnish such information to the contractor, the contractor shall so certify to the contracting agency and shall set forth what efforts have been made to obtain such information.
   d. In the event the union is unable to provide the contractor with a reasonable flow of referrals within the time limit set forth in the collective bargaining agreement, the contractor will, through independent recruitment efforts, fill the employment vacancies without regard to race, color, religion, sex, national origin, age or disability; making full efforts to obtain qualified and/or qualifiable minorities and women. The failure of a union to provide sufficient referrals (even though it is obligated to provide exclusive referrals under the terms of a collective bargaining agreement) does not relieve the contractor from the requirements of this paragraph. In the event the union referral practice prevents the contractor from meeting the obligations pursuant to Executive Order 11246, as amended, and these special provisions, such contractor shall immediately notify the contracting agency.
8. **Reasonable Accommodation for Applicants / Employees with Disabilities:** The contractor must be familiar with the requirements for and comply with the Americans with Disabilities Act and all rules and regulations established there under. Employers must provide reasonable accommodation in all employment activities unless to do so would cause an undue hardship.
9. **Selection of Subcontractors, Procurement of Materials and Leasing of Equipment:** The contractor shall not discriminate on the grounds of race, color, religion, sex, national origin, age or disability in the selection and retention of subcontractors, including procurement of materials and leases of equipment. The contractor shall take all necessary and reasonable steps to ensure nondiscrimination in the administration of this contract.
   a. The contractor shall notify all potential subcontractors and suppliers and lessors of their EEO obligations under this contract.
   b. The contractor will use good faith efforts to ensure subcontractor compliance with their EEO obligations.
10. **Assurance Required by 49 CFR 26.13(b):**
   a. The requirements of 49 CFR Part 26 and the State DOT's U.S. DOT-approved DBE program are incorporated by reference.
   b. The contractor or subcontractor shall not discriminate on the basis of race, color, national origin, or sex in the performance of this contract. The contractor shall carry out applicable requirements of 49 CFR Part 26 in the award and administration of DOT-assisted contracts. Failure by the contractor to carry out these requirements is a material breach of this contract, which may result in the termination of this contract or such other remedy as the contracting agency deems appropriate.
11. **Records and Reports:** The contractor shall keep such records as necessary to document compliance with the EEO requirements. Such records shall be retained for a period of three years following the date of the final payment to the contractor for all contract work and shall be available at reasonable times and places for inspection by authorized representatives of the contracting agency and the FHWA.
   a. The records kept by the contractor shall document the following:
      (1) The number and work hours of minority and non-minority group members and women employed in each work classification on the project;
      (2) The progress and efforts being made in cooperation with unions, when applicable, to increase employment opportunities for minorities and women; and
      (3) The progress and efforts being made in locating, hiring, training, qualifying, and upgrading minorities and women;
   b. The contractors and subcontractors will submit an annual report to the contracting agency each July for the duration of the project, indicating the number of minority, women, and non-minority group employees currently engaged in each work classification required by the contract work. This information is to be reported on Form FHWA-1391. The staffing data should represent the project work force on board in all or any part of the last payroll period preceding the end of July. If on-the-job training is being required by special provision, the contractor will be required to collect and report training data. The employment data should reflect the work force on board during all or any part of the last payroll period preceding the end of July.

III. NONSEGREGATED FACILITIES

This provision is applicable to all Federal-aid construction contracts and to all related construction subcontracts of $10,000 or more.

The contractor must ensure that facilities provided for employees are provided in such a manner that segregation on the basis of race, color, religion, sex, or national origin cannot result. The contractor may neither require such segregated use by written or oral policies nor tolerate such use by employee custom. The contractor's obligation extends further to ensure that its employees are not assigned to perform their services at any location, under the contractor's control, where the facilities are segregated. The term "facilities" includes waiting rooms, work areas, restaurants and other eating areas, time clocks, restrooms, washrooms, locker rooms, and other storage or dressing areas, parking lots, drinking fountains, recreation or entertainment areas, transportation, and housing provided for employees. The contractor shall provide separate or single-user restrooms and necessary dressing or sleeping areas to assure privacy between sexes.

IV. DAVIS-BACON AND RELATED ACT PROVISIONS

This section is applicable to all Federal-aid construction projects exceeding $2,000 and to all related subcontracts and lower-tier subcontracts (regardless of subcontract size). The requirements apply to all projects located within the right-of-way of a roadway that is functionally classified as Federal-aid highway. This excludes roadways functionally classified as local roads or rural minor collectors, which are exempt. Contracting agencies may elect to apply these requirements to other projects.

The following provisions are from the U.S. Department of Labor regulations in 29 CFR 5.5 "Contract provisions and related matters" with minor revisions to conform to the FHWA-1273 format and FHWA program requirements.

1. **Minimum wages**
   a. All laborers and mechanics employed or working upon the site of the work, will be paid unconditionally and not less often than once a week, and without subsequent deduction or rebate on any account (except such payroll deductions as are permitted by regulations issued by the

Secretary of Labor under the Copeland Act (29 CFR part 3)), the full amount of wages and bona fide fringe benefits (or cash equivalents thereof) due at time of payment computed at rates not less than those contained in the wage determination of the Secretary of Labor which is attached hereto and made a part hereof, regardless of any contractual relationship which may be alleged to exist between the contractor and such laborers and mechanics.

Contributions made or costs reasonably anticipated for bona fide fringe benefits under section 1(b)(2) of the Davis-Bacon Act on behalf of laborers or mechanics are considered wages paid to such laborers or mechanics, subject to the provisions of paragraph 1.d. of this section; also, regular contributions made or costs incurred for more than a weekly period (but not less often than quarterly) under plans, funds, or programs which cover the particular weekly period, are deemed to be constructively made or incurred during such weekly period. Such laborers and mechanics shall be paid the appropriate wage rate and fringe benefits on the wage determination for the classification of work actually performed, without regard to skill, except as provided in 29 CFR 5.5(a)(4). Laborers or mechanics performing work in more than one classification may be compensated at the rate specified for each classification for the time actually worked therein: Provided, That the employer's payroll records accurately set forth the time spent in each classification in which work is performed. The wage determination (including any additional classification and wage rates conformed under paragraph 1.b. of this section) and the Davis-Bacon poster (WH–1321) shall be posted at all times by the contractor and its subcontractors at the site of the work in a prominent and accessible place where it can be easily seen by the workers.

b. (1) The contracting officer shall require that any class of laborers or mechanics, including helpers, which is not listed in the wage determination and which is to be employed under the contract shall be classified in conformance with the wage determination. The contracting officer shall approve an additional classification and wage rate and fringe benefits therefore only when the following criteria have been met:

(i) The work to be performed by the classification requested is not performed by a classification in the wage determination; and

(ii) The classification is utilized in the area by the construction industry; and

(iii) The proposed wage rate, including any bona fide fringe benefits, bears a reasonable relationship to the wage rates contained in the wage determination.

(2) If the contractor and the laborers and mechanics to be employed in the classification (if known), or their representatives, and the contracting officer agree on the classification and wage rate (including the amount designated for fringe benefits where appropriate), a report of the action taken shall be sent by the contracting officer to the Administrator of the Wage and Hour Division, Employment Standards Administration, U.S. Department of Labor, Washington, DC 20210. The Administrator, or an authorized representative, will approve, modify, or disapprove every additional classification action within 30 days of receipt and so advise the contracting officer or will notify the contracting officer within the 30-day period that additional time is necessary.

(3) In the event the contractor, the laborers or mechanics to be employed in the classification or their representatives, and the contracting officer do not agree on the proposed classification and wage rate (including the amount designated for fringe benefits, where appropriate), the contracting officer shall refer the questions, including the views of all interested parties and the recommendation of the contracting officer, to the Wage and Hour Administrator for determination. The Wage and Hour Administrator, or an authorized representative, will issue a determination within 30 days of receipt and so advise the contracting officer or will notify the contracting officer within the 30-day period that additional time is necessary.

(4) The wage rate (including fringe benefits where appropriate) determined pursuant to paragraphs 1.b.(2) or 1.b.(3) of this section, shall be paid to all workers performing work in the classification under this contract from the first day on which work is performed in the classification.

c. Whenever the minimum wage rate prescribed in the contract for a class of laborers or mechanics includes a fringe benefit which is not expressed as an hourly rate, the contractor shall either pay the benefit as stated in the wage determination or shall pay another bona fide fringe benefit or an hourly cash equivalent thereof.

d. If the contractor does not make payments to a trustee or other third person, the contractor may consider as part of the wages of any laborer or mechanic the amount of any costs reasonably anticipated in providing bona fide fringe benefits under a plan or program, Provided, That the Secretary of Labor has found, upon the written request of the contractor, that the applicable standards of the Davis-Bacon Act have been met. The Secretary of Labor may require the contractor to set aside in a separate account assets for the meeting of obligations under the plan or program.

2. **Withholding.** The contracting agency shall upon its own action or upon written request of an authorized representative of the Department of Labor, withhold or cause to be withheld from the contractor under this contract, or any other Federal contract with the same prime contractor, or any other federally-assisted contract subject to Davis-Bacon prevailing wage requirements, which is held by the same prime contractor, so much of the accrued payments or advances as may be considered necessary to pay laborers and mechanics, including apprentices, trainees, and helpers, employed by the contractor or any subcontractor the full amount of wages required by the contract. In the event of failure to pay any laborer or mechanic, including any apprentice, trainee, or helper, employed or working on the site of the work, all or part of the wages required by the contract, the contracting agency may, after written notice to the contractor, take such action as may be necessary to cause the suspension of any further payment, advance, or guarantee of funds until such violations have ceased.

3. **Payrolls and basic records**

a. Payrolls and basic records relating thereto shall be maintained by the contractor during the course of the work and preserved for a period of three years thereafter for all laborers and mechanics working at the site of the work. Such records shall contain the name, address, and social security number of each such worker, his or her correct classification, hourly rates of wages paid (including rates of contributions or costs anticipated for bona fide fringe benefits or cash equivalents thereof of the types described in section 1(b)(2)(B) of the Davis-Bacon Act), daily and weekly number of hours worked, deductions made and actual wages paid. Whenever the Secretary of Labor has found under 29 CFR 5.5(a)(1)(iv) that the wages of any laborer or mechanic include the amount of any costs reasonably anticipated in providing benefits under a plan or program described in section 1(b)(2)(B) of the Davis-Bacon Act, the contractor shall maintain records which show that the commitment to provide such benefits is enforceable, that the plan or program is financially responsible, and that the plan or program has been communicated in writing to the laborers or mechanics affected, and records which show the costs anticipated or the actual cost incurred in providing such benefits. Contractors employing apprentices or trainees under approved programs shall maintain written evidence of the registration of apprenticeship programs and certification of trainee programs, the registration of the apprentices and trainees, and the ratios and wage rates prescribed in the applicable programs.

b. (1) The contractor shall submit weekly for each week in which any contract work is performed a copy of all payrolls to the contracting agency. The payrolls submitted shall set out accurately and completely all of the information required to be maintained under 29 CFR 5.5(a)(3)(i), except that full social security numbers and home addresses shall not be included on weekly transmittals. Instead the

payrolls shall only need to include an individually identifying number for each employee (e.g. , the last four digits of the employee's social security number). The required weekly payroll information may be submitted in any form desired. Optional Form WH–347 is available for this purpose from the Wage and Hour Division Web site at http://www.dol.gov/esa/whd/forms/ wh347instr.htm or its successor site. The prime contractor is responsible for the submission of copies of payrolls by all subcontractors. Contractors and subcontractors shall maintain the full social security number and current address of each covered worker, and shall provide them upon request to the contracting agency for transmission to the State DOT, the FHWA or the Wage and Hour Division of the Department of Labor for purposes of an investigation or audit of compliance with prevailing wage requirements. It is not a violation of this section for a prime contractor to require a subcontractor to provide addresses and social security numbers to the prime contractor for its own records, without weekly submission to the contracting agency.

(2) Each payroll submitted shall be accompanied by a "Statement of Compliance," signed by the contractor or subcontractor or his or her agent who pays or supervises the payment of the persons employed under the contract and shall certify the following:

(i) That the payroll for the payroll period contains the information required to be provided under §5.5 (a)(3)(ii) of Regulations, 29 CFR part 5, the appropriate information is being maintained under §5.5 (a)(3)(i) of Regulations, 29 CFR part 5, and that such information is correct and complete;

(ii) That each laborer or mechanic (including each helper, apprentice, and trainee) employed on the contract during the payroll period has been paid the full weekly wages earned, without rebate, either directly or indirectly, and that no deductions have been made either directly or indirectly from the full wages earned, other than permissible deductions as set forth in Regulations, 29 CFR part 3;

(iii) That each laborer or mechanic has been paid not less than the applicable wage rates and fringe benefits or cash equivalents for the classification of work performed, as specified in the applicable wage determination incorporated into the contract.

(3) The weekly submission of a properly executed certification set forth on the reverse side of Optional Form WH–347 shall satisfy the requirement for submission of the "Statement of Compliance" required by paragraph 3.b.(2) of this section.

(4) The falsification of any of the above certifications may subject the contractor or subcontractor to civil or criminal prosecution under section 1001 of title 18 and section 231 of title 31 of the United States Code.

c. The contractor or subcontractor shall make the records required under paragraph 3.a. of this section available for inspection, copying, or transcription by authorized representatives of the contracting agency, the State DOT, the FHWA, or the Department of Labor, and shall permit such representatives to interview employees during working hours on the job. If the contractor or subcontractor fails to submit the required records or to make them available, the FHWA may, after written notice to the contractor, the contracting agency or the State DOT, take such action as may be necessary to cause the suspension of any further payment, advance, or guarantee of funds. Furthermore, failure to submit the required records upon request or to make such records available may be grounds for debarment action pursuant to 29 CFR 5.12.

4. **Apprentices and trainees**

a. Apprentices (programs of the USDOL). Apprentices will be permitted to work at less than the predetermined rate for the work they performed when they are employed pursuant to and individually registered in a bona fide apprenticeship program registered with the U.S. Department of Labor, Employment and Training Administration, Office of Apprenticeship Training, Employer and Labor Services, or with a State Apprenticeship Agency recognized by the Office, or if a person is employed in his or her first 90 days of probationary employment as an apprentice in such an apprenticeship program, who is not individually registered in the program, but who has been certified by the Office of Apprenticeship Training, Employer and Labor Services or a State Apprenticeship Agency (where appropriate) to be eligible for probationary employment as an apprentice.

The allowable ratio of apprentices to journeymen on the job site in any craft classification shall not be greater than the ratio permitted to the contractor as to the entire work force under the registered program. Any worker listed on a payroll at an apprentice wage rate, who is not registered or otherwise employed as stated above, shall be paid not less than the applicable wage rate on the wage determination for the classification of work actually performed. In addition, any apprentice performing work on the job site in excess of the ratio permitted under the registered program shall be paid not less than the applicable wage rate on the wage determination for the work actually performed. Where a contractor is performing construction on a project in a locality other than that in which its program is registered, the ratios and wage rates (expressed in percentages of the journeyman's hourly rate) specified in the contractor's or subcontractor's registered program shall be observed.

Every apprentice must be paid at not less than the rate specified in the registered program for the apprentice's level of progress, expressed as a percentage of the journeymen hourly rate specified in the applicable wage determination. Apprentices shall be paid fringe benefits in accordance with the provisions of the apprenticeship program. If the apprenticeship program does not specify fringe benefits, apprentices must be paid the full amount of fringe benefits listed on the wage determination for the applicable classification. If the Administrator determines that a different practice prevails for the applicable apprentice classification, fringes shall be paid in accordance with that determination.

In the event the Office of Apprenticeship Training, Employer and Labor Services, or a State Apprenticeship Agency recognized by the Office, withdraws approval of an apprenticeship program, the contractor will no longer be permitted to utilize apprentices at less than the applicable predetermined rate for the work performed until an acceptable program is approved.

b. Trainees (programs of the USDOL). Except as provided in 29 CFR 5.16, trainees will not be permitted to work at less than the predetermined rate for the work performed unless they are employed pursuant to and individually registered in a program which has received prior approval, evidenced by formal certification by the U.S. Department of Labor, Employment and Training Administration.

The ratio of trainees to journeymen on the job site shall not be greater than permitted under the plan approved by the Employment and Training Administration.

Every trainee must be paid at not less than the rate specified in the approved program for the trainee's level of progress, expressed as a percentage of the journeyman hourly rate specified in the applicable wage determination. Trainees shall be paid fringe benefits in accordance with the provisions of the trainee program. If the trainee program does not mention fringe benefits, trainees shall be paid the full amount of fringe benefits listed on the wage determination unless the Administrator of the Wage and Hour Division determines that there is an apprenticeship program associated with the corresponding journeyman wage rate on the wage determination which provides for less than full fringe benefits for apprentices. Any employee listed on the payroll at a trainee rate who is not registered and participating in a training plan approved by the Employment and Training Administration shall be paid not less than the applicable wage rate on the wage determination for the classification of work actually performed. In addition, any trainee performing work on the job site in excess of the ratio permitted under the registered program shall be paid not less than the applicable wage rate on the wage determination for the work actually performed.

In the event the Employment and Training Administration withdraws approval of a training program, the contractor will no longer be permitted to utilize trainees at less than the applicable predetermined rate for the work performed until an acceptable program is approved.

c. Equal employment opportunity. The utilization of apprentices, trainees and journeymen under this part shall be in conformity with the equal employment opportunity requirements of Executive Order 11246, as amended, and 29 CFR part 30.

d. Apprentices and Trainees (programs of the U.S. DOT). Apprentices and trainees working under apprenticeship and skill training programs which have been certified by the Secretary of Transportation as promoting EEO in connection with Federal-aid highway construction programs are not subject to the requirements of paragraph 4 of this Section IV. The straight time hourly wage rates for apprentices and trainees under such programs will be established by the particular programs. The ratio of apprentices and trainees to journeymen shall not be greater than permitted by the terms of the particular program.

5. **Compliance with Copeland Act requirements.** The contractor shall comply with the requirements of 29 CFR part 3, which are incorporated by reference in this contract.
6. **Subcontracts.** The contractor or subcontractor shall insert Form FHWA-1273 in any subcontracts and also require the subcontractors to include Form FHWA-1273 in any lower tier subcontracts. The prime contractor shall be responsible for the compliance by any subcontractor or lower tier subcontractor with all the contract clauses in 29 CFR 5.5.
7. **Contract termination:** debarment. A breach of the contract clauses in 29 CFR 5.5 may be grounds for termination of the contract, and for debarment as a contractor and a subcontractor as provided in 29 CFR 5.12.
8. **Compliance with Davis-Bacon and Related Act requirements.** All rulings and interpretations of the Davis-Bacon and Related Acts contained in 29 CFR parts 1, 3, and 5 are herein incorporated by reference in this contract.
9. **Disputes concerning labor standards.** Disputes arising out of the labor standards provisions of this contract shall not be subject to the general disputes clause of this contract. Such disputes shall be resolved in accordance with the procedures of the Department of Labor set forth in 29 CFR parts 5, 6, and 7. Disputes within the meaning of this clause include disputes between the contractor (or any of its subcontractors) and the contracting agency, the U.S. Department of Labor, or the employees or their representatives.
10. **Certification of eligibility.**
    a. By entering into this contract, the contractor certifies that neither it (nor he or she) nor any person or firm who has an interest in the contractor's firm is a person or firm ineligible to be awarded Government contracts by virtue of section 3(a) of the Davis-Bacon Act or 29 CFR 5.12(a)(1).
    b. No part of this contract shall be subcontracted to any person or firm ineligible for award of a Government contract by virtue of section 3(a) of the Davis-Bacon Act or 29 CFR 5.12(a)(1).
    c. The penalty for making false statements is prescribed in the U.S. Criminal Code, 18 U.S.C. 1001.

V. CONTRACT WORK HOURS AND SAFETY STANDARDS ACT

The following clauses apply to any Federal-aid construction contract in an amount in excess of $100,000 and subject to the overtime provisions of the Contract Work Hours and Safety Standards Act. These clauses shall be inserted in addition to the clauses required by 29 CFR 5.5(a) or 29 CFR 4.6. As used in this paragraph, the terms laborers and mechanics include watchmen and guards.

1. **Overtime requirements.** No contractor or subcontractor contracting for any part of the contract work which may require or involve the employment of laborers or mechanics shall require or permit any such laborer or mechanic in any workweek in which he or she is employed on such work to work in excess of forty hours in such workweek unless such laborer or mechanic receives compensation at a rate not less than one and one-half times the basic rate of pay for all hours worked in excess of forty hours in such workweek.
2. **Violation; liability for unpaid wages; liquidated damages.** In the event of any violation of the clause set forth in paragraph (1.) of this section, the contractor and any subcontractor responsible therefor shall be liable for the unpaid wages. In addition, such contractor and subcontractor shall be liable to the United States (in the case of work done under contract for the District of Columbia or a territory, to such District or to such territory), for liquidated damages. Such liquidated damages shall be computed with respect to each individual laborer or mechanic, including watchmen and guards, employed in violation of the clause set forth in paragraph (1.) of this section, in the sum of $10 for each calendar day on which such individual was required or permitted to work in excess of the standard workweek of forty hours without payment of the overtime wages required by the clause set forth in paragraph (1.) of this section.
3. **Withholding for unpaid wages and liquidated damages.** The FHWA or the contacting agency shall upon its own action or upon written request of an authorized representative of the Department of Labor withhold or cause to be withheld, from any moneys payable on account of work performed by the contractor or subcontractor under any such contract or any other Federal contract with the same prime contractor, or any other federally-assisted contract subject to the Contract Work Hours and Safety Standards Act, which is held by the same prime contractor, such sums as may be determined to be necessary to satisfy any liabilities of such contractor or subcontractor for unpaid wages and liquidated damages as provided in the clause set forth in paragraph (2.) of this section.
4. **Subcontracts.** The contractor or subcontractor shall insert in any subcontracts the clauses set forth in paragraph (1.) through (4.) of this section and also a clause requiring the subcontractors to include these clauses in any lower tier subcontracts. The prime contractor shall be responsible for compliance by any subcontractor or lower tier subcontractor with the clauses set forth in paragraphs (1.) through (4.) of this section.

VI. SUBLETTING OR ASSIGNING THE CONTRACT

This provision is applicable to all Federal-aid construction contracts on the National Highway System.

1. The contractor shall perform with its own organization contract work amounting to not less than 30 percent (or a greater percentage if specified elsewhere in the contract) of the total original contract price, excluding any specialty items designated by the contracting agency. Specialty items may be performed by subcontract and the amount of any such specialty items performed may be deducted from the total original contract price before computing the amount of work required to be performed by the contractor's own organization (23 CFR 635.116).
    a. The term "perform work with its own organization" refers to workers employed or leased by the prime contractor, and equipment owned or rented by the prime contractor, with or without operators. Such term does not include employees or equipment of a subcontractor or lower tier subcontractor, agents of the prime contractor, or any other assignees. The term may include payments for the costs of hiring leased employees

from an employee leasing firm meeting all relevant Federal and State regulatory requirements. Leased employees may only be included in this term if the prime contractor meets all of the following conditions:
(1) the prime contractor maintains control over the supervision of the day-to-day activities of the leased employees;
(2) the prime contractor remains responsible for the quality of the work of the leased employees;
(3) the prime contractor retains all power to accept or exclude individual employees from work on the project; and
(4) the prime contractor remains ultimately responsible for the payment of predetermined minimum wages, the submission of payrolls, statements of compliance and all other Federal regulatory requirements.

b. "Specialty Items" shall be construed to be limited to work that requires highly specialized knowledge, abilities, or equipment not ordinarily available in the type of contracting organizations qualified and expected to bid or propose on the contract as a whole and in general are to be limited to minor components of the overall contract.

2. The contract amount upon which the requirements set forth in paragraph (1) of Section VI is computed includes the cost of material and manufactured products which are to be purchased or produced by the contractor under the contract provisions.
3. The contractor shall furnish (a) a competent superintendent or supervisor who is employed by the firm, has full authority to direct performance of the work in accordance with the contract requirements, and is in charge of all construction operations (regardless of who performs the work) and (b) such other of its own organizational resources (supervision, management, and engineering services) as the contracting officer determines is necessary to assure the performance of the contract.
4. No portion of the contract shall be sublet, assigned or otherwise disposed of except with the written consent of the contracting officer, or authorized representative, and such consent when given shall not be construed to relieve the contractor of any responsibility for the fulfillment of the contract. Written consent will be given only after the contracting agency has assured that each subcontract is evidenced in writing and that it contains all pertinent provisions and requirements of the prime contract.
5. The 30% self-performance requirement of paragraph (1) is not applicable to design-build contracts; however, contracting agencies may establish their own self-performance requirements.

VII. SAFETY: ACCIDENT PREVENTION

This provision is applicable to all Federal-aid construction contracts and to all related subcontracts.

1. In the performance of this contract the contractor shall comply with all applicable Federal, State, and local laws governing safety, health, and sanitation (23 CFR 635). The contractor shall provide all safeguards, safety devices and protective equipment and take any other needed actions as it determines, or as the contracting officer may determine, to be reasonably necessary to protect the life and health of employees on the job and the safety of the public and to protect property in connection with the performance of the work covered by the contract.
2. It is a condition of this contract, and shall be made a condition of each subcontract, which the contractor enters into pursuant to this contract, that the contractor and any subcontractor shall not permit any employee, in performance of the contract, to work in surroundings or under conditions which are unsanitary, hazardous or dangerous to his/her health or safety, as determined under construction safety and health standards (29 CFR 1926) promulgated by the Secretary of Labor, in accordance with Section 107 of the Contract Work Hours and Safety Standards Act (40 U.S.C. 3704).
3. Pursuant to 29 CFR 1926.3, it is a condition of this contract that the Secretary of Labor or authorized representative thereof, shall have right of entry to any site of contract performance to inspect or investigate the matter of compliance with the construction safety and health standards and to carry out the duties of the Secretary under Section 107 of the Contract Work Hours and Safety Standards Act (40 U.S.C.3704).

VIII. FALSE STATEMENTS CONCERNING HIGHWAY PROJECTS

This provision is applicable to all Federal-aid construction contracts and to all related subcontracts.

In order to assure high quality and durable construction in conformity with approved plans and specifications and a high degree of reliability on statements and representations made by engineers, contractors, suppliers, and workers on Federal-aid highway projects, it is essential that all persons concerned with the project perform their functions as carefully, thoroughly, and honestly as possible. Willful falsification, distortion, or misrepresentation with respect to any facts related to the project is a violation of Federal law. To prevent any misunderstanding regarding the seriousness of these and similar acts, Form FHWA-1022 shall be posted on each Federal-aid highway project (23 CFR 635) in one or more places where it is readily available to all persons concerned with the project:

18 U.S.C. 1020 reads as follows:

"Whoever, being an officer, agent, or employee of the United States, or of any State or Territory, or whoever, whether a person, association, firm, or corporation, knowingly makes any false statement, false representation, or false report as to the character, quality, quantity, or cost of the material used or to be used, or the quantity or quality of the work performed or to be performed, or the cost thereof in connection with the submission of plans, maps, specifications, contracts, or costs of construction on any highway or related project submitted for approval to the Secretary of Transportation; or

Whoever knowingly makes any false statement, false representation, false report or false claim with respect to the character, quality, quantity, or cost of any work performed or to be performed, or materials furnished or to be furnished, in connection with the construction of any highway or related project approved by the Secretary of Transportation; or

Whoever knowingly makes any false statement or false representation as to material fact in any statement, certificate, or report submitted pursuant to provisions of the Federal-aid Roads Act approved July 1, 1916, (39 Stat. 355), as amended and supplemented;

Shall be fined under this title or imprisoned not more than 5 years or both."

IX. IMPLEMENTATION OF CLEAN AIR ACT AND FEDERAL WATER POLLUTION CONTROL ACT

This provision is applicable to all Federal-aid construction contracts and to all related subcontracts.

By submission of this bid/proposal or the execution of this contract, or subcontract, as appropriate, the bidder, proposer, Federal-aid construction contractor, or subcontractor, as appropriate, will be deemed to have stipulated as follows:

1. That any person who is or will be utilized in the performance of this contract is not prohibited from receiving an award due to a violation of Section 508 of the Clean Water Act or Section 306 of the Clean Air Act.
2. That the contractor agrees to include or cause to be included the requirements of paragraph (1) of this Section X in every subcontract, and further agrees to take such action as the contracting agency may direct as a means of enforcing such requirements.

X. CERTIFICATION REGARDING DEBARMENT, SUSPENSION, INELIGIBILITY AND VOLUNTARY EXCLUSION

This provision is applicable to all Federal-aid construction contracts, design-build contracts, subcontracts, lower-tier subcontracts, purchase orders, lease agreements, consultant contracts or any other covered transaction requiring FHWA approval or that is estimated to cost $25,000 or more – as defined in 2 CFR Parts 180 and 1200.

1. **Instructions for Certification – First Tier Participants:**
   a. By signing and submitting this proposal, the prospective first tier participant is providing the certification set out below.
   b. The inability of a person to provide the certification set out below will not necessarily result in denial of participation in this covered transaction. The prospective first tier participant shall submit an explanation of why it cannot provide the certification set out below. The certification or explanation will be considered in connection with the department or agency's determination whether to enter into this transaction. However, failure of the prospective first tier participant to furnish a certification or an explanation shall disqualify such a person from participation in this transaction.
   c. The certification in this clause is a material representation of fact upon which reliance was placed when the contracting agency determined to enter into this transaction. If it is later determined that the prospective participant knowingly rendered an erroneous certification, in addition to other remedies available to the Federal Government, the contracting agency may terminate this transaction for cause of default.
   d. The prospective first tier participant shall provide immediate written notice to the contracting agency to whom this proposal is submitted if any time the prospective first tier participant learns that its certification was erroneous when submitted or has become erroneous by reason of changed circumstances.
   e. The terms "covered transaction," "debarred," "suspended," "ineligible," "participant," "person," "principal," and "voluntarily excluded," as used in this clause, are defined in 2 CFR Parts 180 and 1200. "First Tier Covered Transactions" refers to any covered transaction between a grantee or subgrantee of Federal funds and a participant (such as the prime or general contract). "Lower Tier Covered Transactions" refers to any covered transaction under a First Tier Covered Transaction (such as subcontracts). "First Tier Participant" refers to the participant who has entered into a covered transaction with a grantee or subgrantee of Federal funds (such as the prime or general contractor). "Lower Tier Participant" refers any participant who has entered into a covered transaction with a First Tier Participant or other Lower Tier Participants (such as subcontractors and suppliers).
   f. The prospective first tier participant agrees by submitting this proposal that, should the proposed covered transaction be entered into, it shall not knowingly enter into any lower tier covered transaction with a person who is debarred, suspended, declared ineligible, or voluntarily excluded from participation in this covered transaction, unless authorized by the department or agency entering into this transaction.
   g. The prospective first tier participant further agrees by submitting this proposal that it will include the clause titled "Certification Regarding Debarment, Suspension, Ineligibility and Voluntary Exclusion-Lower Tier Covered Transactions," provided by the department or contracting agency, entering into this covered transaction, without modification, in all lower tier covered transactions and in all solicitations for lower tier covered transactions exceeding the $25,000 threshold.
   h. A participant in a covered transaction may rely upon a certification of a prospective participant in a lower tier covered transaction that is not debarred, suspended, ineligible, or voluntarily excluded from the covered transaction, unless it knows that the certification is erroneous. A participant is responsible for ensuring that its principals are not suspended, debarred, or otherwise ineligible to participate in covered transactions. To verify the eligibility of its principals, as well as the eligibility of any lower tier prospective participants, each participant may, but is not required to, check the Excluded Parties List System website (https://www.epls.gov/), which is compiled by the General Services Administration.
   i. Nothing contained in the foregoing shall be construed to require the establishment of a system of records in order to render in good faith the certification required by this clause. The knowledge and information of the prospective participant is not required to exceed that which is normally possessed by a prudent person in the ordinary course of business dealings.
   j. Except for transactions authorized under paragraph (f) of these instructions, if a participant in a covered transaction knowingly enters into a lower tier covered transaction with a person who is suspended, debarred, ineligible, or voluntarily excluded from participation in this transaction, in addition to other remedies available to the Federal Government, the department or agency may terminate this transaction for cause or default.

* * * * *

2. **Certification Regarding Debarment, Suspension, Ineligibility and Voluntary Exclusion – First Tier Participants:**
   a. The prospective first tier participant certifies to the best of its knowledge and belief, that it and its principals:
      (1) Are not presently debarred, suspended, proposed for debarment, declared ineligible, or voluntarily excluded from participating in covered transactions by any Federal department or agency;
      (2) Have not within a three-year period preceding this proposal been convicted of or had a civil judgment rendered against them for commission of fraud or a criminal offense in connection with obtaining, attempting to obtain, or performing a public (Federal, State or local) transaction or contract under a public transaction; violation of Federal or State antitrust statutes or commission of embezzlement, theft, forgery, bribery, falsification or destruction of records, making false statements, or receiving stolen property;
      (3) Are not presently indicted for or otherwise criminally or civilly charged by a governmental entity (Federal, State or local) with commission of any of the offenses enumerated in paragraph (a)(2) of this certification; and
      (4) Have not within a three-year period preceding this application/proposal had one or more public transactions (Federal, State or local) terminated for cause or default.
   b. Where the prospective participant is unable to certify to any of the statements in this certification, such prospective participant shall attach an explanation to this proposal.
2. **Instructions for Certification - Lower Tier Participants:**
   (Applicable to all subcontracts, purchase orders and other lower tier transactions requiring prior FHWA approval or estimated to cost $25,000 or more - 2 CFR Parts 180 and 1200)
   a. By signing and submitting this proposal, the prospective lower tier is providing the certification set out below.
   b. The certification in this clause is a material representation of fact upon which reliance was placed when this transaction was entered into. If it is later determined that the prospective lower tier participant knowingly rendered an erroneous certification, in addition to other remedies available to the Federal Government, the department, or agency with which this transaction originated may pursue available remedies, including suspension and/or debarment.

c. The prospective lower tier participant shall provide immediate written notice to the person to which this proposal is submitted if at any time the prospective lower tier participant learns that its certification was erroneous by reason of changed circumstances.
d. The terms "covered transaction," "debarred," "suspended," "ineligible," "participant," "person," "principal," and "voluntarily excluded," as used in this clause, are defined in 2 CFR Parts 180 and 1200. You may contact the person to which this proposal is submitted for assistance in obtaining a copy of those regulations. "First Tier Covered Transactions" refers to any covered transaction between a grantee or subgrantee of Federal funds and a participant (such as the prime or general contract). "Lower Tier Covered Transactions" refers to any covered transaction under a First Tier Covered Transaction (such as subcontracts). "First Tier Participant" refers to the participant who has entered into a covered transaction with a grantee or subgrantee of Federal funds (such as the prime or general contractor). "Lower Tier Participant" refers any participant who has entered into a covered transaction with a First Tier Participant or other Lower Tier Participants (such as subcontractors and suppliers).
e. The prospective lower tier participant agrees by submitting this proposal that, should the proposed covered transaction be entered into, it shall not knowingly enter into any lower tier covered transaction with a person who is debarred, suspended, declared ineligible, or voluntarily excluded from participation in this covered transaction, unless authorized by the department or agency with which this transaction originated.
f. The prospective lower tier participant further agrees by submitting this proposal that it will include this clause titled "Certification Regarding Debarment, Suspension, Ineligibility and Voluntary Exclusion-Lower Tier Covered Transaction," without modification, in all lower tier covered transactions and in all solicitations for lower tier covered transactions exceeding the $25,000 threshold.
g. A participant in a covered transaction may rely upon a certification of a prospective participant in a lower tier covered transaction that is not debarred, suspended, ineligible, or voluntarily excluded from the covered transaction, unless it knows that the certification is erroneous. A participant is responsible for ensuring that its principals are not suspended, debarred, or otherwise ineligible to participate in covered transactions. To verify the eligibility of its principals, as well as the eligibility of any lower tier prospective participants, each participant may, but is not required to, check the Excluded Parties List System website (https://www.epls.gov/), which is compiled by the General Services Administration.
h. Nothing contained in the foregoing shall be construed to require establishment of a system of records in order to render in good faith the certification required by this clause. The knowledge and information of participant is not required to exceed that which is normally possessed by a prudent person in the ordinary course of business dealings.
i. Except for transactions authorized under paragraph e of these instructions, if a participant in a covered transaction knowingly enters into a lower tier covered transaction with a person who is suspended, debarred, ineligible, or voluntarily excluded from participation in this transaction, in addition to other remedies available to the Federal Government, the department or agency with which this transaction originated may pursue available remedies, including suspension and/or debarment.

* * * * *

Certification Regarding Debarment, Suspension, Ineligibility and Voluntary Exclusion--Lower Tier Participants:

1. The prospective lower tier participant certifies, by submission of this proposal, that neither it nor its principals is presently debarred, suspended, proposed for debarment, declared ineligible, or voluntarily excluded from participating in covered transactions by any Federal department or agency.
2. Where the prospective lower tier participant is unable to certify to any of the statements in this certification, such prospective participant shall attach an explanation to this proposal.

* * * * *

XI. CERTIFICATION REGARDING USE OF CONTRACT FUNDS FOR LOBBYING

This provision is applicable to all Federal-aid construction contracts and to all related subcontracts which exceed $100,000 (49 CFR 20).

1. The prospective participant certifies, by signing and submitting this bid or proposal, to the best of his or her knowledge and belief, that:
   a. No Federal appropriated funds have been paid or will be paid, by or on behalf of the undersigned, to any person for influencing or attempting to influence an officer or employee of any Federal agency, a Member of Congress, an officer or employee of Congress, or an employee of a Member of Congress in connection with the awarding of any Federal contract, the making of any Federal grant, the making of any Federal loan, the entering into of any cooperative agreement, and the extension, continuation, renewal, amendment, or modification of any Federal contract, grant, loan, or cooperative agreement.
   b. If any funds other than Federal appropriated funds have been paid or will be paid to any person for influencing or attempting to influence an officer or employee of any Federal agency, a Member of Congress, an officer or employee of Congress, or an employee of a Member of Congress in connection with this Federal contract, grant, loan, or cooperative agreement, the undersigned shall complete and submit Standard Form-LLL, "Disclosure Form to Report Lobbying," in accordance with its instructions.
2. This certification is a material representation of fact upon which reliance was placed when this transaction was made or entered into. Submission of this certification is a prerequisite for making or entering into this transaction imposed by 31 U.S.C. 1352. Any person who fails to file the required certification shall be subject to a civil penalty of not less than $10,000 and not more than $100,000 for each such failure.
3. The prospective participant also agrees by submitting its bid or proposal that the participant shall require that the language of this certification be included in all lower tier subcontracts, which exceed $100,000 and that all such recipients shall certify and disclose accordingly.

STANDARD SPECIAL PROVISION

ON-THE-JOB TRAINING

(10-16-07) (Rev. 5-21-13) Z-10

Description

The North Carolina Department of Transportation will administer a custom version of the Federal On-the-Job Training (OJT) Program, commonly referred to as the Alternate OJT Program. All contractors (existing and newcomers) will be automatically placed in the Alternate Program. Standard OJT requirements typically associated with individual projects will no longer be applied at the project level. Instead, these requirements will be applicable on an annual basis for each contractor administered by the OJT Program Manager.

On the Job Training shall meet the requirements of 23 CFR 230.107 (b), 23 USC – Section 140, this provision and the On-the-Job Training Program Manual.

The Alternate OJT Program will allow a contractor to train employees on Federal, State and privately funded projects located in North Carolina. However, priority shall be given to training employees on NCDOT Federal-Aid funded projects.

Minorities and Women

Developing, training and upgrading of minorities and women toward journeyman level status is a primary objective of this special training provision. Accordingly, the Contractor shall make every effort to enroll minority and women as trainees to the extent that such persons are available within a reasonable area of recruitment. This training commitment is not intended, and shall not be used, to discriminate against any applicant for training, whether a member of a minority group or not.

Assigning Training Goals

The Department, through the OJT Program Manager, will assign training goals for a calendar year based on the contractors' past three years' activity and the contractors' anticipated upcoming year's activity with the Department. At the beginning of each year, all contractors eligible will be contacted by the Department to determine the number of trainees that will be assigned for the upcoming calendar year. At that time the Contractor shall enter into an agreement with the Department to provide a self-imposed on-the-job training program for the calendar year. This agreement will include a specific number of annual training goals agreed to by both parties. The number of training assignments may range from 1 to 15 per contractor per calendar year. The Contractor shall sign an agreement to fulfill their annual goal for the year. A sample agreement is available at www.ncbowd.com/section/on-the-job-training.

Training Classifications

The Contractor shall provide on-the-job training aimed at developing full journeyman level workers in the construction craft/operator positions. Preference shall be given to providing training in the following skilled work classifications:

Equipment Operators	Office Engineers
Truck Drivers	Estimators
Carpenters	Iron / Reinforcing Steel Workers
Concrete Finishers	Mechanics
Pipe Layers	Welders

The Department has established common training classifications and their respective training requirements that may be used by the contractors. However, the classifications established are not all-inclusive. Where the training is oriented toward construction applications, training will be allowed in lower-level management positions such as office engineers and estimators. Contractors shall submit new classifications for specific job functions that their employees are performing. The Department will review and recommend for acceptance to FHWA the new classifications proposed by contractors, if applicable. New classifications shall meet the following requirements:

Proposed training classifications are reasonable and realistic based on the job skill classification needs, and

The number of training hours specified in the training classification is consistent with common practices and provides enough time for the trainee to obtain journeyman level status.

The Contractor may allow trainees to be trained by a subcontractor provided that the Contractor retains primary responsibility for meeting the training and this provision is made applicable to the subcontract. However, only the Contractor will receive credit towards the annual goal for the trainee.

Where feasible, 25 percent of apprentices or trainees in each occupation shall be in their first year of apprenticeship or training. The number of trainees shall be distributed among the work classifications on the basis of the contractor's needs and the availability of journeymen in the various classifications within a reasonable area of recruitment.

No employee shall be employed as a trainee in any classification in which they have successfully completed a training course leading to journeyman level status or in which they have been employed as a journeyman.

Records and Reports

The Contractor shall maintain enrollment, monthly and completion reports documenting company compliance under these contract documents. These documents and any other information as requested shall be submitted to the OJT Program Manager.

Upon completion and graduation of the program, the Contractor shall provide each trainee with a certification Certificate showing the type and length of training satisfactorily completed.

Trainee Interviews

All trainees enrolled in the program will receive an initial and Trainee/Post graduate interview conducted by the OJT program staff.

Trainee Wages

Contractors shall compensate trainees on a graduating pay scale based upon a percentage of the prevailing minimum journeyman wages (Davis-Bacon Act). Minimum pay shall be as follows:

60 percent	of the journeyman wage for the first half of the training period
75 percent	of the journeyman wage for the third quarter of the training period
90 percent	of the journeyman wage for the last quarter of the training period

In no instance shall a trainee be paid less than the local minimum wage. The Contractor shall adhere to the minimum hourly wage rate that will satisfy both the NC Department of Labor (NCDOL) and the Department.

Achieving or Failing to Meet Training Goals

The Contractor will be credited for each trainee employed by him on the contract work who is currently enrolled or becomes enrolled in an approved program and who receives training for at least 50 percent of the specific program requirement. Trainees will be allowed to be transferred between projects if required by the Contractor's scheduled workload to meet training goals.

If a contractor fails to attain their training assignments for the calendar year, they may be taken off the NCDOT's Bidders List.

Measurement and Payment

No compensation will be made for providing required training in accordance with these contract documents.

STANDARD SPECIAL PROVISION
MINIMUM WAGES
GENERAL DECISION NC130096 01/04/2013 NC96

Z-96

Date: January 4, 2013

General Decision Number: NC130096 01/04/13 NC96

Superseded General Decision Numbers: NC20120096

State: North Carolina

Construction Type: HIGHWAY

COUNTIES:

Bladen	Lee	Robeson
Cleveland	Lenoir	Rowan
Columbus	Lincoln	Sampson
Davidson	Montgomery	Scotland
Duplin	Moore	Stanly
Harnett	Richmond	Wilson
Iredell		

HIGHWAY CONSTRUCTION PROJECTS (excluding tunnels, building structures in rest area projects, railroad construction, bascule, suspension and spandrel arch bridges designed for commercial navigation, bridges involving marine construction, and other major bridges).

Modification Number	Publication Date
0	01/04/2013

SUNC2011-077 09/16/2011

	Rates	Fringes
CARPENTER (Form Work Only)	13.30	
CEMENT MASON/CONCRETE FINISHER	14.18	
INSTALLER (Guardrail) (includes Guiderail/Post Driver Work)	11.76	
IRONWORKER (Reinforcing)	13.90	
LABORER		
Asphalt, Asphalt Distributor, Raker, and Spreader	12.81	
Common or General		
Davidson County	10.64	
Harnett County	10.41	
Iredell County	10.38	
Lenoir County	9.98	
Remaining Counties	10.27	
Richmond County	10.46	
Robeson County	10.07	
Rowan County	10.25	
Stanly County	9.03	
Concrete Saw	11.56	
Landscape	9.90	
Luteman	12.68	
Mason Tender (Cement/Concrete)	10.53	
Pipelayer		
Remaining Counties	11.79	
Stanly County	12.25	
Traffic Control (Flagger)	10.31	
POWER EQUIPMENT OPERATORS		
Backhoe/Excavator/Trackhoe	14.64	
Broom/Sweeper	12.29	
Bulldozer	15.32	
Crane	19.10	
Grader/Blade	19.29	
Loader	13.93	
Mechanic	15.92	
Milling Machine		
Columbus, Davidson, Duplin, Lenoir, Lincoln, Moore, Richmond, and Stanly Counties	14.09	
Remaining Counties	13.80	
Oiler	14.19	
Paver	14.10	
Roller	12.83	
Scraper	12.29	
Screed	14.75	
Tractor	13.92	
TRUCK DRIVER		
Dump Truck		
Davidson County	12.61	
Remaining Counties	11.80	
Lowboy Truck	15.99	
Single Axle Truck	12.07	
Water Truck	13.82	

Welders – Receive rate prescribed for craft performing operation to which welding is incidental.

Unlisted classifications needed for work not included within the scope of the classifications listed may be added after award only as provided in the labor standards contract clauses (29 CFR 5.5(a)(1)(ii)).

The body of each wage determination lists the classification and wage rates that have been found to be prevailing for the cited type(s) of construction in the area covered by the wage determination. The classifications are listed in alphabetical order of "identifiers" that indicate whether the particular rate is union or non-union.

Union Identifiers

An identifier enclosed in dotted lines beginning with characters other than "SU" denotes that the union classification and rate have found to be prevailing for that classification. Example: PLUM0198-005 07/01/2011. The first four letters , PLUM, indicate the international union and the four-digit number, 0198, that follows indicates the local union number or district council number where applicable, i.e., Plumbers Local 0198. The next number, 005 in the example, is an internal number used in processing the wage determination. The date, 07/01/2011, following these characters is the effective date of the most current negotiated rate/collective bargaining agreement which would be July 1, 2011 in the above example.

Union prevailing wage rates will be updated to reflect any changes in the collective bargaining agreements governing the rates.

0000/9999: weighted union wage rates will be published annually each January.

Non-Union Identifiers

Classifications listed under an "SU" identifier were derived from survey data by computing average rates and are not union rates; however, the data used in computing these rates may include both union and non-union data. Example: SULA2004-007 5/13/2010. SU indicates the rates are not union rates, LA indicates the State of Louisiana; 2004 is the year of the survey; and 007 is an internal number used in producing the wage determination. A 1993 or later date, 5/13/2010, indicates the classifications and rates under that identifier were issued as a General Wage Determination on that date.

Survey wage rates will remain in effect and will not change until a new survey is conducted.

WAGE DETERMINATION APPEALS PROCESS

1.) Has there been an initial decision in the matter? This can be:

* an existing published wage determination
* a survey underlying a wage determination
* a Wage and Hour Division letter setting forth a position on a wage determination matter
* a conformance (additional classification and rate) ruling

On survey related matters, initial contact, including requests for summaries of surveys, should be with the Wage and Hour Regional Office for the area in which the survey was conducted because those Regional Offices have responsibility for the Davis-Bacon survey program. If the response from this initial contact is not satisfactory, then the process described in 2.) and 3.) should be followed.

With regard to any other matter not yet ripe for the formal process described here, initial contact should be with the Branch of Construction Wage Determinations. Write to:

Branch of Construction Wage Determinations
Wage and Hour Division
U. S. Department of Labor
200 Constitution Avenue, N.W.
Washington, D.C. 20210

2.) If the answer to the question in 1.) is yes, then an interested party (those affected by the action) can request review and reconsideration from the Wage and Hour Administrator (See 29 CFR Part 1.8 and 29 CFR Part 7). Write to:

Wage and Hour Administrator
U.S. Department of Labor
200 Constitution Avenue, N.W.
Washington, D.C. 20210

The request should be accompanied by a full statement of the interested party's position and by any information (wage payment data, project description, area practice material, etc.) that the requestor considers relevant to the issue.

3.) If the decision of the Administrator is not favorable, an interested party may appeal directly to the Administrative Review Board (formerly the Wage Appeals Board). Write to:

Administrative Review Board
U.S. Department of Labor
200 Constitution Avenue, N.W.
Washington, D.C. 20210

4.) All decisions by the Administrative Review Board are final.

END OF GENERAL DECISION

Line #	Item Number	Sec #	Description	Quantity	Unit Cost	Amount
			ROADWAY ITEMS			
0001	0000100000-N	800	MOBILIZATION	Lump Sum	L.S.	
0002	0000400000-N	801	CONSTRUCTION SURVEYING	Lump Sum	L.S.	
0003	0043000000-N	226	GRADING	Lump Sum	L.S.	
0004	0050000000-E	226	SUPPLEMENTARY CLEARING & GRUBBING	4 ACR		
0005	0057000000-E	226	UNDERCUT EXCAVATION	10,400 CY		
0006	0127000000-N	SP	EMBANKMENT SETTLEMENT GAUGES	27 EA		
0007	0134000000-E	240	DRAINAGE DITCH EXCAVATION	1,530 CY		
0008	0141000000-E	240	BERM DITCH CONSTRUCTION	260 LF		
0009	0195000000-E	265	SELECT GRANULAR MATERIAL	6,200 CY		
0010	0196000000-E	270	GEOTEXTILE FOR SOIL STABILIZATION	7,100 SY		
0011	0199000000-E	SP	TEMPORARY SHORING	3,760 SF		
0012	0255000000-E	SP	GENERIC GRADING ITEM HAULING AND DISPOSAL OF PETROLEUM CONTAMINATED SOIL	100 TON		
0013	0318000000-E	300	FOUNDATION CONDITIONING MATERIAL, MINOR STRUCTURES	837 TON		
0014	0320000000-E	300	FOUNDATION CONDITIONING GEOTEXTILE	1,360 SY		
0015	0335200000-E	305	15" DRAINAGE PIPE	68 LF		
0016	0366000000-E	310	15" RC PIPE CULVERTS, CLASS III	360 LF		
0017	0378000000-E	310	24" RC PIPE CULVERTS, CLASS III	304 LF		
0018	0384000000-E	310	30" RC PIPE CULVERTS, CLASS III	60 LF		

Line #	Item Number	Sec #	Description	Quantity	Unit Cost	Amount
0019	0390000000-E	310	36" RC PIPE CULVERTS, CLASS III	44 LF		
0020	0448200000-E	310	15" RC PIPE CULVERTS, CLASS IV	1,106 LF		
0021	0448300000-E	310	18" RC PIPE CULVERTS, CLASS IV	8 LF		
0022	0448500000-E	310	30" RC PIPE CULVERTS, CLASS IV	684 LF		
0023	0448600000-E	310	36" RC PIPE CULVERTS, CLASS IV	32 LF		
0024	0582000000-E	310	15" CS PIPE CULVERTS, 0.064" THICK	68 LF		
0025	0588000000-E	310	18" CS PIPE CULVERTS, 0.064" THICK	196 LF		
0026	0600000000-E	310	30" CS PIPE CULVERTS, 0.079" THICK	56 LF		
0027	0986000000-E	SP	GENERIC PIPE ITEM 30" BCCM PIPE CULVERT, 0.079" THICK	100 LF		
0028	0986000000-E	SP	GENERIC PIPE ITEM 36" WELDED STEEL PIPE, 0.5" THICK, GRADE B, IN SOIL	251 LF		
0029	0986000000-E	SP	GENERIC PIPE ITEM 36" WELDED STEEL PIPE, 0.5" THICK, GRADE B, NOT IN SOIL	251 LF		
0030	0986000000-E	SP	GENERIC PIPE ITEM 36" WELDED STEEL PIPE, 0.5" THICK, GRADE B, OPEN CUT	290 LF		
0031	0986000000-E	SP	GENERIC PIPE ITEM 42" WELDED STEEL PIPE, 0.625" THICK, GRADE B, IN SOIL	85 LF		
0032	0986000000-E	SP	GENERIC PIPE ITEM 42" WELDED STEEL PIPE, 0.625" THICK, GRADE B, NOT IN SOIL	85 LF		
0033	0986000000-E	SP	GENERIC PIPE ITEM 42" WELDED STEEL PIPE, 0.625" THICK, GRADE B, OPEN CUT	213 LF		

Line #	Item Number	Sec #	Description	Quantity	Unit Cost	Amount
0034	0986000000-E	SP	GENERIC PIPE ITEM 48" WELDED STEEL PIPE, 0.625" THICK, GRADE B, IN SOIL	40 LF		
0035	0986000000-E	SP	GENERIC PIPE ITEM 48" WELDED STEEL PIPE, 0.625" THICK, GRADE B, NOT IN SOIL	40 LF		
0036	0986000000-E	SP	GENERIC PIPE ITEM 48" WELDED STEEL PIPE, 0.625" THICK, GRADE B, OPEN CUT	64 LF		
0037	0986000000-E	SP	GENERIC PIPE ITEM 54" WELDED STEEL PIPE, 0.75" THICK, GRADE B, IN SOIL	25 LF		
0038	0986000000-E	SP	GENERIC PIPE ITEM 54" WELDED STEEL PIPE, 0.75" THICK, GRADE B, NOT IN SOIL	25 LF		
0039	0986000000-E	SP	GENERIC PIPE ITEM 54" WELDED STEEL PIPE, 0.75" THICK, GRADE B, OPEN CUT	90 LF		
0040	0992000000-E	SP	GENERIC PIPE ITEM 30" BCCM PIPE ELBOWS, 0.079" THICK	2 EA		
0041	0995000000-E	340	PIPE REMOVAL	1,625 LF		
0042	0996000000-N	350	PIPE CLEAN-OUT	4 EA		
0043	1077000000-E	SP	#57 STONE	1,060 TON		
0044	1099500000-E	505	SHALLOW UNDERCUT	3,250 CY		
0045	1099700000-E	505	CLASS IV SUBGRADE STABILIZATION	6,850 TON		
0046	1110000000-E	510	STABILIZER AGGREGATE	1,100 TON		
0047	1121000000-E	520	AGGREGATE BASE COURSE	269 TON		
0048	1220000000-E	545	INCIDENTAL STONE BASE	4,460 TON		
0049	1275000000-E	600	PRIME COAT	72 GAL		

Line #	Item Number	Sec #	Description	Quantity	Unit Cost	Amount
0050	1297000000-E	607	MILLING ASPHALT PAVEMENT, **** DEPTH (1-1/2")	3,500 SY		
0051	1330000000-E	607	INCIDENTAL MILLING	13,285 SY		
0052	1489000000-E	610	ASPHALT CONC BASE COURSE, TYPE B25.0B	6,205 TON		
0053	1498000000-E	610	ASPHALT CONC INTERMEDIATE COURSE, TYPE I19.0B	1,640 TON		
0054	1519000000-E	610	ASPHALT CONC SURFACE COURSE, TYPE S9.5B	3,550 TON		
0055	1575000000-E	620	ASPHALT BINDER FOR PLANT MIX	571 TON		
0056	1693000000-E	654	ASPHALT PLANT MIX, PAVEMENT REPAIR	925 TON		
0057	2000000000-N	806	RIGHT OF WAY MARKERS	109 EA		
0058	2022000000-E	815	SUBDRAIN EXCAVATION	403.2 CY		
0059	2033000000-E	815	SUBDRAIN FINE AGGREGATE	302.4 CY		
0060	2044000000-E	815	6" PERFORATED SUBDRAIN PIPE	1,800 LF		
0061	2070000000-N	815	SUBDRAIN PIPE OUTLET	15 EA		
0062	2077000000-E	815	6" OUTLET PIPE	351 LF		
0063	2209000000-E	838	ENDWALLS	117 CY		
0064	2220000000-E	838	REINFORCED ENDWALLS	15 CY		
0065	2275000000-E	SP	FLOWABLE FILL	336 CY		
0066	2286000000-N	840	MASONRY DRAINAGE STRUCTURES	49 EA		
0067	2308000000-E	840	MASONRY DRAINAGE STRUCTURES	11.97 LF		
0068	2354200000-N	840	FRAME WITH GRATE, STD 840.24	1 EA		

Line #	Item Number	Sec #	Description	Quantity	Unit Cost	Amount
0069	2364000000-N	840	FRAME WITH TWO GRATES, STD 840.16	8 EA		
0070	2366000000-N	840	FRAME WITH TWO GRATES, STD 840.24	2 EA		
0071	2374000000-N	840	FRAME WITH GRATE & HOOD, STD 840.03, TYPE ** (E)	9 EA		
0072	2374000000-N	840	FRAME WITH GRATE & HOOD, STD 840.03, TYPE ** (F)	14 EA		
0073	2374000000-N	840	FRAME WITH GRATE & HOOD, STD 840.03, TYPE ** (G)	10 EA		
0074	2396000000-N	840	FRAME WITH COVER, STD 840.54	11 EA		
0075	2451000000-N	852	CONCRETE TRANSITIONAL SECTION FOR DROP INLET	4 EA		
0076	2484000000-E	SP	GENERIC DRAINAGE ITEM SUBSURFACE DRAIN	5,265 LF		
0077	2535000000-E	846	***X **" CONCRETE CURB (8" X 12")	580 LF		
0078	2542000000-E	846	1'-6" CONCRETE CURB & GUTTER	500 LF		
0079	2549000000-E	846	2'-6" CONCRETE CURB & GUTTER	6,495 LF		
0080	2570000000-N	SP	MODIFIED CONCRETE FLUME	2 EA		
0081	2591000000-E	848	4" CONCRETE SIDEWALK	3,275 SY		
0082	2605000000-N	848	CONCRETE CURB RAMP	47 EA		
0083	2612000000-E	848	6" CONCRETE DRIVEWAY	490 SY		
0084	2619000000-E	850	4" CONCRETE PAVED DITCH	10 SY		
0085	2738000000-E	SP	GENERIC PAVING ITEM SPECIAL MONOLITHIC CONCRETE ISLAND	380 SY		

Line #	Item Number	Sec #	Description	Quantity	Unit Cost	Amount
0086	2759000000-N	SP	GENERIC PAVING ITEM CONCRETE FLUME	1 EA		
0087	2759000000-N	SP	GENERIC PAVING ITEM PRECAST CONCRETE PARKING BUMP-ER	24 EA		
0088	2830000000-N	858	ADJUSTMENT OF MANHOLES	12 EA		
0089	2845000000-N	858	ADJUSTMENT OF METER BOXES OR VALVE BOXES	20 EA		
0090	2920000000-N	859	CONVERT EXISTING DROP INLET TO CATCH BASIN	1 EA		
0091	2995000000-N	SP	GENERIC DRAINAGE ITEM CONVERT EXISTING CATCH BASIN TO TRAFFIC BEARING JUNCTION BOX WITH MANHOLE	5 EA		
0092	3030000000-E	862	STEEL BM GUARDRAIL	462.5 LF		
0093	3105000000-N	862	STEEL BM GUARDRAIL TERMINAL SECTIONS	20 EA		
0094	3150000000-N	862	ADDITIONAL GUARDRAIL POSTS	15 EA		
0095	3270000000-N	SP	GUARDRAIL ANCHOR UNITS, TYPE 350	2 EA		
0096	3317000000-N	862	GUARDRAIL ANCHOR UNITS, TYPE B-77	2 EA		
0097	3360000000-E	863	REMOVE EXISTING GUARDRAIL	179 LF		
0098	3536000000-E	866	CHAIN LINK FENCE, 48" FABRIC	312 LF		
0099	3542000000-E	866	METAL LINE POSTS FOR 48" CHAIN LINK FENCE	27 EA		
0100	3548000000-E	866	METAL TERMINAL POSTS FOR 48" CHAIN LINK FENCE	3 EA		
0101	3563000000-E	SP	TEMP **" WOVEN WIRE FENCE, COMPLETE W/POSTS (60")	190 LF		

Line #	Item Number	Sec #	Description	Quantity	Unit Cost	Amount
0102	3578000000-N	SP	GENERIC FENCING ITEM RIGHT OF WAY GATE	7 EA		
0103	3628000000-E	876	RIP RAP, CLASS I	1,530 TON		
0104	3649000000-E	876	RIP RAP, CLASS B	808 TON		
0105	3656000000-E	876	GEOTEXTILE FOR DRAINAGE	9,640 SY		
0106	3832000000-E	SP	RAILROAD TRACK TO BE REMOVED	5,670 TF		
0107	3885000000-E	SP	GENERIC TRACKWORK ITEM SUB-BALLAST	127,390 TON		
0108	4025000000-E	901	CONTRACTOR FURNISHED, TYPE *** SIGN (E)	345 SF		
0109	4025000000-E	901	CONTRACTOR FURNISHED, TYPE *** SIGN (F)	57 SF		
0110	4072000000-E	903	SUPPORTS, 3-LB STEEL U-CHANNEL	755 LF		
0111	4078000000-E	903	SUPPORTS, 2-LB STEEL U-CHANNEL	7 EA		
0112	4096000000-N	904	SIGN ERECTION, TYPE D	12 EA		
0113	4102000000-N	904	SIGN ERECTION, TYPE E	75 EA		
0114	4155000000-N	907	DISPOSAL OF SIGN SYSTEM, U-CHANNEL	35 EA		
0115	4400000000-E	1110	WORK ZONE SIGNS (STATIONARY)	1,952 SF		
0116	4405000000-E	1110	WORK ZONE SIGNS (PORTABLE)	950 SF		
0117	4410000000-E	1110	WORK ZONE SIGNS (BARRICADE MOUNTED)	269 SF		
0118	4415000000-N	1115	FLASHING ARROW BOARD	1 EA		
0119	4420000000-N	1120	PORTABLE CHANGEABLE MESSAGE SIGN	4 EA		

Line #	Item Number	Sec #	Description	Quantity	Unit Cost	Amount
0120	4430000000-N	1130	DRUMS	189 EA		
0121	4435000000-N	1135	CONES	165 EA		
0122	4445000000-E	1145	BARRICADES (TYPE III)	926 LF		
0123	4455000000-N	1150	FLAGGER	135 DAY		
0124	4490000000-E	1170	PORTABLE CONCRETE BARRIER (ANCHORED)	1,640 LF		
0125	4516000000-N	1180	SKINNY DRUM	101 EA		
0126	4520000000-N	1266	TUBULAR MARKERS (FIXED)	152 EA		
0127	4685000000-E	1205	THERMOPLASTIC PAVEMENT MARKING LINES (4", 90 MILS)	5,818 LF		
0128	4686000000-E	1205	THERMOPLASTIC PAVEMENT MARKING LINES (4", 120 MILS)	18,829 LF		
0129	4695000000-E	1205	THERMOPLASTIC PAVEMENT MARKING LINES (8", 90 MILS)	945 LF		
0130	4697000000-E	1205	THERMOPLASTIC PAVEMENT MARKING LINES (8", 120 MILS)	265 LF		
0131	4705000000-E	1205	THERMOPLASTIC PAVEMENT MARKING LINES (16", 120 MILS)	824 LF		
0132	4710000000-E	1205	THERMOPLASTIC PAVEMENT MARKING LINES (24", 120 MILS)	1,095 LF		
0133	4721000000-E	1205	THERMOPLASTIC PAVEMENT MARKING CHARACTER (120 MILS)	10 EA		
0134	4725000000-E	1205	THERMOPLASTIC PAVEMENT MARKING SYMBOL (90 MILS)	54 EA		
0135	4810000000-E	1205	PAINT PAVEMENT MARKING LINES (4")	29,386 LF		
0136	4820000000-E	1205	PAINT PAVEMENT MARKING LINES (8")	378 LF		
0137	4830000000-E	1205	PAINT PAVEMENT MARKING LINES (16")	448 LF		

Line #	Item Number	Sec #	Description	Quantity	Unit Cost	Amount
0138	4835000000-E	1205	PAINT PAVEMENT MARKING LINES (24")	785 LF		
0139	4840000000-N	1205	PAINT PAVEMENT MARKING CHARAC-TER	20 EA		
0140	4845000000-N	1205	PAINT PAVEMENT MARKING SYMBOL	26 EA		
0141	4850000000-E	1205	REMOVAL OF PAVEMENT MARKING LINES (4")	10,422 LF		
0142	4870000000-E	1205	REMOVAL OF PAVEMENT MARKING LINES (24")	24 LF		
0143	4875000000-N	1205	REMOVAL OF PAVEMENT MARKING SYMBOLS & CHARACTERS	4 EA		
0144	4900000000-N	1251	PERMANENT RAISED PAVEMENT MARKERS	401 EA		
0145	5319000000-E	1505	CLASS B CONCRETE FOR ENCASING UTILITY LINES	1.5 CY		
0146	5325600000-E	1510	6" WATER LINE	4,314 LF		
0147	5325800000-E	1510	8" WATER LINE	432 LF		
0148	5326200000-E	1510	12" WATER LINE	742 LF		
0149	5540000000-E	1515	6" VALVE	9 EA		
0150	5558000000-E	1515	12" VALVE	2 EA		
0151	5571400000-E	1515	4" TAPPING VALVE	1 EA		
0152	5571600000-E	1515	6" TAPPING VALVE	4 EA		
0153	5571800000-E	1515	8" TAPPING VALVE	1 EA		
0154	5589200000-E	1515	2" AIR RELEASE VALVE	2 EA		
0155	5606000000-E	1515	2" BLOW OFF	2 EA		
0156	5648000000-N	1515	RELOCATE WATER METER	11 EA		

Line #	Item Number	Sec #	Description	Quantity	Unit Cost	Amount
0157	5649000000-N	1515	RECONNECT WATER METER	24 EA		
0158	5666000000-E	1515	FIRE HYDRANT	1 EA		
0159	5672000000-N	1515	RELOCATE FIRE HYDRANT	10 EA		
0160	5691300000-E	1520	8" SANITARY GRAVITY SEWER	1,188 LF		
0161	5709100000-E	1520	2" FORCE MAIN SEWER	10 LF		
0162	5709300000-E	1520	6" FORCE MAIN SEWER	460 LF		
0163	5709400000-E	1520	8" FORCE MAIN SEWER	195 LF		
0164	5768000000-N	1520	SANITARY SEWER CLEAN-OUT	4 EA		
0165	5775000000-E	1525	4' DIA UTILITY MANHOLE	12 EA		
0166	5781000000-E	1525	UTILITY MANHOLE WALL, 4' DIA	46 LF		
0167	5800000000-E	1530	ABANDON 6" UTILITY PIPE	2,388 LF		
0168	5801000000-E	1530	ABANDON 8" UTILITY PIPE	1,915 LF		
0169	5804000000-E	1530	ABANDON 12" UTILITY PIPE	1,007 LF		
0170	5811000000-E	1530	ABANDON 18" UTILITY PIPE	100 LF		
0171	5815000000-N	1530	REMOVE WATER METER	5 EA		
0172	5815500000-N	1530	REMOVE FIRE HYDRANT	2 EA		
0173	5816000000-N	1530	ABANDON UTILITY MANHOLE	1 EA		
0174	5828000000-N	1530	REMOVE UTILITY MANHOLE	4 EA		
0175	5835700000-E	1540	16" ENCASEMENT PIPE	700 LF		
0176	5835800000-E	1540	18" ENCASEMENT PIPE	535 LF		
0177	5835900000-E	1540	20" ENCASEMENT PIPE	96 LF		

Line #	Item Number	Sec #	Description	Quantity	Unit Cost	Amount
0178	5836000000-E	1540	24" ENCASEMENT PIPE	510 LF		
0179	5871900000-E	1550	TRENCHLESS INSTALLATION OF 16" IN SOIL	351 LF		
0180	5871910000-E	1550	TRENCHLESS INSTALLATION OF 16" NOT IN SOIL	349 LF		
0181	5872000000-E	1550	TRENCHLESS INSTALLATION OF 18" IN SOIL	268 LF		
0182	5872010000-E	1550	TRENCHLESS INSTALLATION OF 18" NOT IN SOIL	267 LF		
0183	5872200000-E	1550	TRENCHLESS INSTALLATION OF 24" IN SOIL	175 LF		
0184	5872210000-E	1550	TRENCHLESS INSTALLATION OF 24" NOT IN SOIL	175 LF		
0185	6000000000-E	1605	TEMPORARY SILT FENCE	66,600 LF		
0186	6006000000-E	1610	STONE FOR EROSION CONTROL, CLASS A	28,000 TON		
0187	6009000000-E	1610	STONE FOR EROSION CONTROL, CLASS B	17,180 TON		
0188	6012000000-E	1610	SEDIMENT CONTROL STONE	7,720 TON		
0189	6015000000-E	1615	TEMPORARY MULCHING	214.5 ACR		
0190	6018000000-E	1620	SEED FOR TEMPORARY SEEDING	5,050 LB		
0191	6021000000-E	1620	FERTILIZER FOR TEMPORARY SEED-ING	22.5 TON		
0192	6024000000-E	1622	TEMPORARY SLOPE DRAINS	3,215 LF		
0193	6029000000-E	SP	SAFETY FENCE	600 LF		
0194	6030000000-E	1630	SILT EXCAVATION	47,800 CY		
0195	6036000000-E	1631	MATTING FOR EROSION CONTROL	255,420 SY		

Line #	Item Number	Sec #	Description	Quantity	Unit Cost	Amount
0196	6037000000-E	SP	COIR FIBER MAT	235 SY		
0197	6038000000-E	SP	PERMANENT SOIL REINFORCEMENT MAT	2,200 SY		
0198	6042000000-E	1632	1/4" HARDWARE CLOTH	4,640 LF		
0199	6070000000-N	1639	SPECIAL STILLING BASINS	24 EA		
0200	6071010000-E	SP	WATTLE	140 LF		
0201	6071012000-E	SP	COIR FIBER WATTLE	9,490 LF		
0202	6071020000-E	SP	POLYACRYLAMIDE (PAM)	8,640 LB		
0203	6071030000-E	1640	COIR FIBER BAFFLE	2,390 LF		
0204	6071050000-E	SP	**" SKIMMER (1-1/2")	15 EA		
0205	6071050000-E	SP	**" SKIMMER (2")	3 EA		
0206	6071050000-E	SP	**" SKIMMER (2-1/2")	1 EA		
0207	6084000000-E	1660	SEEDING & MULCHING	210 ACR		
0208	6087000000-E	1660	MOWING	132 ACR		
0209	6090000000-E	1661	SEED FOR REPAIR SEEDING	2,200 LB		
0210	6093000000-E	1661	FERTILIZER FOR REPAIR SEEDING	6.25 TON		
0211	6096000000-E	1662	SEED FOR SUPPLEMENTAL SEEDING	3,250 LB		
0212	6108000000-E	1665	FERTILIZER TOPDRESSING	96.75 TON		
0213	6114500000-N	1667	SPECIALIZED HAND MOWING	80 MHR		
0214	6117000000-N	SP	RESPONSE FOR EROSION CONTROL	350 EA		

Line #	Item Number	Sec #	Description	Quantity	Unit Cost	Amount
0215	6132000000-N	SP	GENERIC EROSION CONTROL ITEM SUPPLEMENTAL RESPONSE FOR EROSION CONTROL	30 EA		
0216	7060000000-E	1705	SIGNAL CABLE	4,060 LF		
0217	7120000000-E	1705	VEHICLE SIGNAL HEAD (12", 3 SECTION)	38 EA		
0218	7132000000-E	1705	VEHICLE SIGNAL HEAD (12", 4 SECTION)	7 EA		
0219	7144000000-E	1705	VEHICLE SIGNAL HEAD (12", 5 SECTION)	2 EA		
0220	7252000000-E	1710	MESSENGER CABLE (1/4")	80 LF		
0221	7264000000-E	1710	MESSENGER CABLE (3/8")	1,150 LF		
0222	7288000000-E	1715	PAVED TRENCHING (**********) (1, 2")	120 LF		
0223	7300000000-E	1715	UNPAVED TRENCHING (**********) (1, 2")	2,470 LF		
0224	7301000000-E	1715	DIRECTIONAL DRILL (**********) (1, 2")	130 LF		
0225	7301000000-E	1715	DIRECTIONAL DRILL (**********) (2, 2")	310 LF		
0226	7324000000-N	1716	JUNCTION BOX (STANDARD SIZE)	41 EA		
0227	7348000000-N	1716	JUNCTION BOX (OVER-SIZED, HEA-VY DUTY)	8 EA		
0228	7360000000-N	1720	WOOD POLE	10 EA		
0229	7372000000-N	1721	GUY ASSEMBLY	22 EA		
0230	7408000000-E	1722	1" RISER WITH WEATHERHEAD	3 EA		
0231	7420000000-E	1722	2" RISER WITH WEATHERHEAD	15 EA		
0232	7444000000-E	1725	INDUCTIVE LOOP SAWCUT	3,590 LF		

Line #	Item Number	Sec #	Description	Quantity	Unit Cost	Amount
0233	7456000000-E	1726	LEAD-IN CABLE (**********) (14-2)	7,135 LF		
0234	7590000000-N	SP	METAL POLE WITH DUAL MAST ARM	2 EA		
0235	7613000000-N	SP	SOIL TEST	2 EA		
0236	7614100000-E	SP	DRILLED PIER FOUNDATION (14-2)	12 CY		
0237	7631000000-N	SP	MAST ARM WITH METAL POLE DESIGN	2 EA		
0238	7636000000-N	1745	SIGN FOR SIGNALS	16 EA		
0239	7675000000-N	1747	LED BLANKOUT SIGN	5 EA		
0240	7684000000-N	1750	SIGNAL CABINET FOUNDATION	5 EA		
0241	7756000000-N	1751	CONTROLLER WITH CABINET (TYPE 2070L, BASE MOUNTED)	5 EA		
0242	7780000000-N	1751	DETECTOR CARD (TYPE 2070L)	23 EA		
0243	7901000000-N	1753	CABINET BASE EXTENDER	5 EA		
0244	7948000000-N	1757	TRAFFIC SIGNAL REMOVAL	1 EA		
0245	7990000000-E	SP	GENERIC SIGNAL ITEM 2" RIGID METALLIC CONDUIT	175 LF		
0272	0192000000-N	260	PROOF ROLLING	60 HR		
			WALL ITEMS			
0246	8801000000-E	SP	MSE RETAINING WALL NO **** (A)	470 SF		
0247	8839000000-E	SP	GENERIC RETAINING WALL ITEM CONC BARRIER WITH MOMENT SLAB	1,450 LF		

Line #	Item Number	Sec #	Description	Quantity	Unit Cost	Amount
			STRUCTURE ITEMS			
0248	8014000000-N	SP	TEMPORARY RAILROAD SHORING FOR BENT ***, STATION ********** (ABUT 1, 9404+63.64 -M1-)	Lump Sum	L.S.	
0249	8014000000-N	SP	TEMPORARY RAILROAD SHORING FOR BENT ***, STATION ********** (ABUT 2, 9404+63.64 -M1-)	Lump Sum	L.S.	
0250	8014000000-N	SP	TEMPORARY RAILROAD SHORING FOR BENT ***, STATION ********** (PIER 1, 9404+63.64 -M1-)	Lump Sum	L.S.	
0251	8014000000-N	SP	TEMPORARY RAILROAD SHORING FOR BENT ***, STATION ********** (PIER 2, 9404+63.64 -M1-)	Lump Sum	L.S.	
0252	8091000000-N	410	FOUNDATION EXCAVATION FOR BENT ** AT STATION ********** (PIER 1, 9404+23.91 -M1-)	Lump Sum	L.S.	
0253	8091000000-N	410	FOUNDATION EXCAVATION FOR BENT ** AT STATION ********** (PIER 2, 9404+88.19 -M1-)	Lump Sum	L.S.	
0254	8112730000-N	450	PDA TESTING	4 EA		
0255	8147000000-E	420	REINFORCED CONCRETE DECK SLAB	4,656 SF		
0256	8175000000-E	420	CLASS AA CONCRETE (BRIDGE)	398.7 CY		
0257	8217000000-E	425	REINFORCING STEEL (BRIDGE)	64,286 LB		
0258	8238000000-E	425	SPIRAL COLUMN REINFORCING STEEL (BRIDGE)	4,295 LB		
0259	8280000000-E	440	APPROX ..... LBS STRUCTURAL STEEL	369,169 LS		
0260	8294000000-N	442	PAINTING OF STRUCTURAL STEEL	Lump Sum	L.S.	
0261	8364000000-E	450	HP12X53 STEEL PILES	9,060 LF		
0262	8453000000-E	454	METHOD B DAMPPROOFING	422 SY		
0263	8517000000-E	460	1'-**"X *****" CONCRETE PARA-PET (1'-0" X 2'-1")	254.8 LF		

Line #	Item Number	Sec #	Description	Quantity	Unit Cost	Amount
0264	8531000000-E	462	4" SLOPE PROTECTION	355 SY		
0265	8741000000-N	SP	STRUCTURE DRAINAGE SYSTEM AT STA********** (9404+63.64 -M1-)	Lump Sum	L.S.	
0266	8860000000-N	SP	GENERIC STRUCTURE ITEM 4" DIAMETER SIGNAL CONDUIT SYSTEM AT STA 9404+63.64 -M1-	Lump Sum	L.S.	
0267	8860000000-N	SP	GENERIC STRUCTURE ITEM SELF-LUBRICATING EXPANSION BEARING ASSEMBLIES	Lump Sum	L.S.	
0268	8867000000-E	SP	GENERIC STRUCTURE ITEM METAL FENCE & HANDRAIL	327.5 LF		
0269	8893000000-E	SP	GENERIC STRUCTURE ITEM 1" ASPHALT PLANKING PROTECTIVE COURSE FOR DECK	468 SY		
0270	8893000000-E	SP	GENERIC STRUCTURE ITEM MEMBRANE LAYER WATERPROOFING FOR DECK	513 SY		
0271	8893000000-E	SP	GENERIC STRUCTURE ITEM TWO-PART MEMBRANE WATERPROOF-ING SYSTEM	50 SY		

Vendor 1 of 3: BLYTHE DEVELOPMENT CO. (3740)
Call Order 018 (Proposal: C203207)

Bid Information

County: ROWAN
Address: 1415 E. Westinghouse Blvd.
Charlotte , NC , 28273
Signature Check: L.JACK_BLYTHE_3740
Time Bid Received: October 15, 2013 01:56 PM
Amendment Count: 1

Bid Checksum: 0308DC3A
Bid Total: $19,893,955.20
Items Total: $19,893,955.20
Time Total: $0.00

Bidding Errors:
None.

DBE GOAL SET 10.0

DBE GOAL MET 10.0

Vendor 1 of 3: BLYTHE DEVELOPMENT CO. (3740)
Call Order 018 (Proposal: C203207)

Bid Bond Information

Projects:		**Bond Maximum:**	
Counties:		**State of Incorporation:**	
Bond ID:	SNC13113894	**Agency Execution Date:**	10/10/2013 11
Paid by Check:	No	**Surety Name:**	surety2000
Bond Percent:	5%	**Bond Agency Name:**	Liberty Mutual Insurance Company

Vendor 3740's Bid Information for Call 018, Letting L131015, 10/15/13

Blythe Development Co. (3740)
Call Order 018 (Proposal ID C203207)

LIST OF DBE PARTICIPANTS

VENDOR NUMBER	DBE NAME / ADDRESS	WORK CODE TYPE OF WORK	CERT TYPE	AMOUNT	
3765 WB	STAY ALERT SAFETY SERVICES INC POST OFFICE BOX 467 , KERNERSVILLE, NC 27285		Sub	107,902.41	Committed
8233 WB	GROUND EFFECTS, INC P.O. BOX 2440 , MATTHEWS, NC 28106		Sub	53,998.87	Committed
11551WB	CAROLINA GUARDRAIL LLC 920 SAM CT. , COLFAX, NC 27235		Sub	14,974.25	Committed
10129WB	CONCRETE SPECIALTY CONTRACTORS POST OFFICE BOX 2303 , SHELBY, NC 28151		Sub	325,935.77	Committed
3080 WB	CURTIN TRUCKING & DRAINAGE, INC POST OFFICE BOX 38220 , CHARLOTTE, NC 282781003		Sub	46,166.00	Committed
10869MB	SK HAULING LLC 188 DOUBLE SPRING LANE , LEXINGTON, NC 27295		Sub	1,393,789.00	Committed
7138 MB	EXPRESS LOGISTICS SERVICES, INC P.O. BOX 19761 , CHARLOTTE, NC 28219		Sub	68,370.00	Committed
			TOTAL:	$2,011,136.30 10.11%	

Vendor 3740's Bid Information for Call 018, Letting L131015, 10/15/13

Blythe Development Co. (3740)
Call Order 018 (Proposal ID C203207)

Miscelleneous Data Info - Contractor Responses:
==========

NON-COLLUSION AND DEBARMENT CERTIFICATION

Explanation of the prospective bidder that is unable to certify to any of the statements in this certification:

Explanation:
NOT ANSWERED
NOT ANSWERED
NOT ANSWERED
NOT ANSWERED

AWARD LIMITS ON MULTIPLE PROJECTS

By answering YES to this statement, the bidder acknowleges that they are using the award limits on multiple projects. No

It is the desire of the Bidder to be awarded contracts, the value of which will not exceed a total of NOT ANSWERED for those projects indicated herein, for which bids will be opened on (MM/DD/YY)

The Award Limits shall apply to the following projects:

Contract Number	County
NOT ANSWERED	
NOT ANSWERED	

```
      NOT ANSWERED
      NOT ANSWERED
      NOT ANSWERED
      NOT ANSWERED


Bid Bond Data Info - Contractor Responses:
==============================================

                BondID: SNC13113894
Surety Registry Agency: surety2000
             Verified?: Yes
         Surety Agency: Liberty Mutual Insurance Company
   Bond Execution Date: 10/10/2013 11
          Bond Amount:     $994,697.76 (Five Percent of Bid)
```

Contract ID: C203207 Project(s): FRA-FR-HSR-0006-10-
Letting Date: 10-15-13 Call Order: 018
Bidder: 3740 - Blythe Development Co.

Line No.	Item Description	Approx. Quantity and Units	Unit Price Dollars	Cts	Bid Amount Dollars	Ct
Section 0001	ROADWAY ITEMS					
	Alt Group					
0001	0000100000-N MOBILIZATION	LUMP	LUMP		1,000,000.00	
0002	0000400000-N CONSTRUCTION SURVEYING	LUMP	LUMP		142,000.00	
0003	0043000000-N GRADING	LUMP	LUMP		3,175,000.00	
0004	0050000000-E SUPPLEMENTARY CLEARING & GRUB-BING	4.000 ACR	8,310.00000		33,240.00	
0005	0057000000-E UNDERCUT EXCAVATION	10,400.000 CY	9.00000		93,600.00	
0006	0127000000-N EMBANKMENT SETTLEMENT GAUGES	27.000 EA	3,885.00000		104,895.00	
0007	0134000000-E DRAINAGE DITCH EXCAVATION	1,530.000 CY	3.10000		4,743.00	
0008	0141000000-E BERM DITCH CONSTRUCTION	260.000 LF	4.65000		1,209.00	
0009	0195000000-E SELECT GRANULAR MATERIAL	6,200.000 CY	44.00000		272,800.00	
0010	0196000000-E GEOTEXTILE FOR SOIL STABILIZA-TION	7,100.000 SY	1.50000		10,650.00	
0011	0199000000-E TEMPORARY SHORING	3,760.000 SF	38.00000		142,880.00	

Contract ID: C203207 Project(s): FRA-FR-HSR-0006-10-
Letting Date: 10-15-13 Call Order: 018
Bidder: 3740 - Blythe Development Co.

Line No.	Item Description	Approx. Quantity and Units	Unit Price Dollars	Unit Price Cts	Bid Amount Dollars	Bid Amount Ct
0012	0255000000-E GENERIC GRADING ITEM HAULING AND DISPOSAL OF PETROLEUM CONTAMINATED SOIL	100.000 TON	80.00000		8,000.00	
0013	0318000000-E FOUNDATION CONDITIONING MATE- RIAL, MINOR STRUCTURES	837.000 TON	33.00000		27,621.00	
0014	0320000000-E FOUNDATION CONDITIONING GEO-TEXTILE	1,360.000 SY	1.60000		2,176.00	
0015	0335200000-E 15" DRAINAGE PIPE	68.000 LF	32.00000		2,176.00	
0016	0366000000-E 15" RC PIPE CULVERTS, CLASS III	360.000 LF	34.00000		12,240.00	
0017	0378000000-E 24" RC PIPE CULVERTS, CLASS III	304.000 LF	43.00000		13,072.00	
0018	0384000000-E 30" RC PIPE CULVERTS, CLASS III	60.000 LF	60.00000		3,600.00	
0019	0390000000-E 36" RC PIPE CULVERTS, CLASS III	44.000 LF	75.00000		3,300.00	
0020	0448200000-E 15" RC PIPE CULVERTS, CLASS IV	1,106.000 LF	34.00000		37,604.00	
0021	0448300000-E 18" RC PIPE CULVERTS, CLASS IV	8.000 LF	55.00000		440.00	
0022	0448500000-E 30" RC PIPE CULVERTS, CLASS IV	684.000 LF	65.00000		44,460.00	

Contract ID: C203207 Project(s): FRA-FR-HSR-0006-10-
Letting Date: 10-15-13 Call Order: 018
Bidder: 3740 - Blythe Development Co.

Line No.	Item Description	Approx. Quantity and Units	Unit Price Dollars	Unit Price Cts	Bid Amount Dollars	Bid Amount Ct
0023	0448600000-E 36" RC PIPE CULVERTS, CLASS IV	32.000 LF	80.00000		2,560.00	
0024	0582000000-E 15" CS PIPE CULVERTS, 0.064" THICK	68.000 LF	47.00000		3,196.00	
0025	0588000000-E 18" CS PIPE CULVERTS, 0.064" THICK	196.000 LF	50.00000		9,800.00	
0026	0600000000-E 30" CS PIPE CULVERTS, 0.079" THICK	56.000 LF	60.00000		3,360.00	
0027	0986000000-E GENERIC PIPE ITEM 30" BCCM PIPE CULVERT, 0.079" THICK	100.000 LF	108.00000		10,800.00	
0028	0986000000-E GENERIC PIPE ITEM 36" WELDED STEEL PIPE, 0.5" THICK, GRADE B, IN SOIL	251.000 LF	400.00000		100,400.00	
0029	0986000000-E GENERIC PIPE ITEM 36" WELDED STEEL PIPE, 0.5" THICK, GRADE B, NOT IN SOIL	251.000 LF	400.00000		100,400.00	
0030	0986000000-E GENERIC PIPE ITEM 36" WELDED STEEL PIPE, 0.5" THICK, GRADE B, OPEN CUT	290.000 LF	150.00000		43,500.00	
0031	0986000000-E GENERIC PIPE ITEM 42" WELDED STEEL PIPE, 0.625" THICK, GRADE B, IN SOIL	85.000 LF	500.00000		42,500.00	
0032	0986000000-E GENERIC PIPE ITEM 42" WELDED STEEL PIPE, 0.625" THICK, GRADE B, NOT IN SOIL	85.000 LF	500.00000		42,500.00	

Contract ID: C203207 Project(s): FRA-FR-HSR-0006-10-
Letting Date: 10-15-13 Call Order: 018
Bidder: 3740 - Blythe Development Co.

Line No.	Item Description	Approx. Quantity and Units	Unit Price Dollars	Unit Price Cts	Bid Amount Dollars	Bid Amount Ct
0033	0986000000-E GENERIC PIPE ITEM 42" WELDED STEEL PIPE, 0.625" THICK, GRADE B, OPEN CUT	213.000 LF	180.00000		38,340.00	
0034	0986000000-E GENERIC PIPE ITEM 48" WELDED STEEL PIPE, 0.625" THICK, GRADE B, IN SOIL	40.000 LF	600.00000		24,000.00	
0035	0986000000-E GENERIC PIPE ITEM 48" WELDED STEEL PIPE, 0.625" THICK, GRADE B, NOT IN SOIL	40.000 LF	600.00000		24,000.00	
0036	0986000000-E GENERIC PIPE ITEM 48" WELDED STEEL PIPE, 0.625" THICK, GRADE B, OPEN CUT	64.000 LF	220.00000		14,080.00	
0037	0986000000-E GENERIC PIPE ITEM 54" WELDED STEEL PIPE, 0.75" THICK, GRADE B, IN SOIL	25.000 LF	850.00000		21,250.00	
0038	0986000000-E GENERIC PIPE ITEM 54" WELDED STEEL PIPE, 0.75" THICK, GRADE B, NOT IN SOIL	25.000 LF	850.00000		21,250.00	
0039	0986000000-E GENERIC PIPE ITEM 54" WELDED STEEL PIPE, 0.75" THICK, GRADE B, OPEN CUT	90.000 LF	300.00000		27,000.00	
0040	0992000000-E GENERIC PIPE ITEM 30" BCCM PIPE ELBOWS, 0.079" THICK	2.000 EA	1,100.00000		2,200.00	
0041	0995000000-E PIPE REMOVAL	1,625.000 LF	20.00000		32,500.00	
0042	0996000000-N PIPE CLEAN-OUT	4.000 EA	1,235.00000		4,940.00	

Contract ID: C203207 Project(s): FRA-FR-HSR-0006-10-
Letting Date: 10-15-13 Call Order: 018
Bidder: 3740 - Blythe Development Co.

Line No.	Item Description	Approx. Quantity and Units	Unit Price Dollars	Unit Price Cts	Bid Amount Dollars	Bid Amount Ct
0043	1077000000-E #57 STONE	1,060.000 TON	33.00000		34,980.00	
0044	1099500000-E SHALLOW UNDERCUT	3,250.000 CY	3.45000		11,212.50	
0045	1099700000-E CLASS IV SUBGRADE STABILIZA- TION	6,850.000 TON	22.00000		150,700.00	
0046	1110000000-E STABILIZER AGGREGATE	1,100.000 TON	22.00000		24,200.00	
0047	1121000000-E AGGREGATE BASE COURSE	269.000 TON	30.00000		8,070.00	
0048	1220000000-E INCIDENTAL STONE BASE	4,460.000 TON	26.00000		115,960.00	
0049	1275000000-E PRIME COAT	72.000 GAL	5.00000		360.00	
0050	1297000000-E MILLING ASPHALT PAVEMENT, ***"DEPTH (1-1/2")	3,500.000 SY	4.50000		15,750.00	
0051	1330000000-E INCIDENTAL MILLING	13,285.000 SY	6.00000		79,710.00	
0052	1489000000-E ASPHALT CONC BASE COURSE, TYPE B25.0B	6,205.000 TON	60.00000		372,300.00	
0053	1498000000-E ASPHALT CONC INTERMEDIATE COURSE, TYPE I19.0B	1,640.000 TON	75.00000		123,000.00	
0054	1519000000-E ASPHALT CONC SURFACE COURSE, TYPE S9.5B	3,550.000 TON	65.00000		230,750.00	

Contract ID: C203207 Project(s): FRA-FR-HSR-0006-10-
Letting Date: 10-15-13 Call Order: 018
Bidder: 3740 - Blythe Development Co.

Line No.	Item Description	Approx. Quantity and Units	Unit Price Dollars	Unit Price Cts	Bid Amount Dollars	Bid Amount Ct
0055	1575000000-E ASPHALT BINDER FOR PLANT MIX	571.000 TON	625.00000		356,875.00	
0056	1693000000-E ASPHALT PLANT MIX, PAVEMENT REPAIR	925.000 TON	125.00000		115,625.00	
0057	2000000000-N RIGHT OF WAY MARKERS	109.000 EA	170.00000		18,530.00	
0058	2022000000-E SUBDRAIN EXCAVATION	403.200 CY	20.00000		8,064.00	
0059	2033000000-E SUBDRAIN FINE AGGREGATE	302.400 CY	15.00000		4,536.00	
0060	2044000000-E 6" PERFORATED SUBDRAIN PIPE	1,800.000 LF	18.00000		32,400.00	
0061	2070000000-N SUBDRAIN PIPE OUTLET	15.000 EA	300.00000		4,500.00	
0062	2077000000-E 6" OUTLET PIPE	351.000 LF	22.00000		7,722.00	
0063	2209000000-E ENDWALLS	117.000 CY	800.00000		93,600.00	
0064	2220000000-E REINFORCED ENDWALLS	15.000 CY	1,200.00000		18,000.00	
0065	2275000000-E FLOWABLE FILL	336.000 CY	140.00000		47,040.00	
0066	2286000000-N MASONRY DRAINAGE STRUCTURES	49.000 EA	1,100.00000		53,900.00	

Contract ID: C203207 Project(s): FRA-FR-HSR-0006-10-
Letting Date: 10-15-13 Call Order: 018
Bidder: 3740 - Blythe Development Co.

Line No.	Item Description	Approx. Quantity and Units	Unit Price Dollars	Unit Price Cts	Bid Amount Dollars	Bid Amount Ct
0067	2308000000-E MASONRY DRAINAGE STRUCTURES	11.970 LF	200.00000		2,394.00	
0068	2354200000-N FRAME WITH GRATE, STD 840.24	1.000 EA	280.00000		280.00	
0069	2364000000-N FRAME WITH TWO GRATES, STD 840.16	8.000 EA	450.00000		3,600.00	
0070	2366000000-N FRAME WITH TWO GRATES, STD 840.24	2.000 EA	400.00000		800.00	
0071	2374000000-N FRAME WITH GRATE & HOOD, STD 840.03, TYPE ** (E)	9.000 EA	490.00000		4,410.00	
0072	2374000000-N FRAME WITH GRATE & HOOD, STD 840.03, TYPE ** (F)	14.000 EA	515.00000		7,210.00	
0073	2374000000-N FRAME WITH GRATE & HOOD, STD 840.03, TYPE ** (G)	10.000 EA	515.00000		5,150.00	
0074	2396000000-N FRAME WITH COVER, STD 840.54	11.000 EA	345.00000		3,795.00	
0075	2451000000-N CONCRETE TRANSITIONAL SECTION FOR DROP INLET	4.000 EA	555.00000		2,220.00	
0076	2484000000-E GENERIC DRAINAGE ITEM SUBSURFACE DRAIN	5,265.000 LF	20.00000		105,300.00	
0077	2535000000-E **"X **" CONCRETE CURB (8" X 12")	580.000 LF	17.00000		9,860.00	
0078	2542000000-E 1'-6" CONCRETE CURB & GUTTER	500.000 LF	15.00000		7,500.00	

Contract ID: C203207 Project(s): FRA-FR-HSR-0006-10-
Letting Date: 10-15-13 Call Order: 018
Bidder: 3740 - Blythe Development Co.

Line No.	Item Description	Approx. Quantity and Units	Unit Price Dollars	Unit Price Cts	Bid Amount Dollars	Bid Amount Ct
0079	2549000000-E 2'-6" CONCRETE CURB & GUTTER	6,495.000 LF	18.00000		116,910.00	
0080	2570000000-N MODIFIED CONCRETE FLUME	2.000 EA	1,600.00000		3,200.00	
0081	2591000000-E 4" CONCRETE SIDEWALK	3,275.000 SY	32.00000		104,800.00	
0082	2605000000-N CONCRETE CURB RAMP	47.000 EA	1,400.00000		65,800.00	
0083	2612000000-E 6" CONCRETE DRIVEWAY	490.000 SY	42.00000		20,580.00	
0084	2619000000-E 4" CONCRETE PAVED DITCH	10.000 SY	50.00000		500.00	
0085	2738000000-E GENERIC PAVING ITEM SPECIAL MONOLITHIC CONCRETE ISLAND	380.000 SY	53.00000		20,140.00	
0086	2759000000-N GENERIC PAVING ITEM CONCRETE FLUME	1.000 EA	1,800.00000		1,800.00	
0087	2759000000-N GENERIC PAVING ITEM PRECAST CONCRETE PARKING BUMP-ER	24.000 EA	55.00000		1,320.00	
0088	2830000000-N ADJUSTMENT OF MANHOLES	12.000 EA	270.00000		3,240.00	
0089	2845000000-N ADJUSTMENT OF METER BOXES OR VALVE BOXES	20.000 EA	240.00000		4,800.00	

Contract ID: C203207 Project(s): FRA-FR-HSR-0006-10-
Letting Date: 10-15-13 Call Order: 018
Bidder: 3740 - Blythe Development Co.

Line No.	Item Description	Approx. Quantity and Units	Unit Price Dollars	Unit Price Cts	Bid Amount Dollars	Bid Amount Ct
0090	2920000000-N CONVERT EXISTING DROP INLET TOCATCH BASIN	1.000 EA	900.00000		900.00	
0091	2995000000-N GENERIC DRAINAGE ITEM CONVERT EXISTING CATCH BASIN TO TRAFFIC BEARING JUNCTION BOX WITH MANHOLE	5.000 EA	900.00000		4,500.00	
0092	3030000000-E STEEL BM GUARDRAIL	462.500 LF	16.00000		7,400.00	
0093	3105000000-N STEEL BM GUARDRAIL TERMINAL SECTIONS	20.000 EA	55.00000		1,100.00	
0094	3150000000-N ADDITIONAL GUARDRAIL POSTS	15.000 EA	16.00000		240.00	
0095	3270000000-N GUARDRAIL ANCHOR UNITS, TYPE 350	2.000 EA	2,200.00000		4,400.00	
0096	3317000000-N GUARDRAIL ANCHOR UNITS, TYPE B-77	2.000 EA	1,300.00000		2,600.00	
0097	3360000000-E REMOVE EXISTING GUARDRAIL	179.000 LF	2.00000		358.00	
0098	3536000000-E CHAIN LINK FENCE, 48" FABRIC	312.000 LF	10.00000		3,120.00	
0099	3542000000-E METAL LINE POSTS FOR 48" CHAINLINK FENCE	27.000 EA	24.00000		648.00	
0100	3548000000-E METAL TERMINAL POSTS FOR 48" CHAIN LINK FENCE	3.000 EA	72.00000		216.00	

Contract ID: C203207 Project(s): FRA-FR-HSR-0006-10-
Letting Date: 10-15-13 Call Order: 018
Bidder: 3740 - Blythe Development Co.

Line No.	Item Description	Approx. Quantity and Units	Unit Price Dollars	Unit Price Cts	Bid Amount Dollars	Bid Amount Ct
0101	3563000000-E TEMP **" WOVEN WIRE FENCE, COMPLETE W/POSTS (60")	190.000 LF	7.00000		1,330.00	
0102	3578000000-N GENERIC FENCING ITEM RIGHT OF WAY GATE	7.000 EA	665.00000		4,655.00	
0103	3628000000-E RIP RAP, CLASS I	1,530.000 TON	47.00000		71,910.00	
0104	3649000000-E RIP RAP, CLASS B	808.000 TON	45.00000		36,360.00	
0105	3656000000-E GEOTEXTILE FOR DRAINAGE	9,640.000 SY	2.00000		19,280.00	
0106	3832000000-E RAILROAD TRACK TO BE REMOVED	5,670.000 TF	12.00000		68,040.00	
0107	3885000000-E GENERIC TRACKWORK ITEM SUB-BALLAST	127,390.000 TON	25.00000		3,184,750.00	
0108	4025000000-E CONTRACTOR FURNISHED, TYPE ***SIGN (E)	345.000 SF	16.00000		5,520.00	
0109	4025000000-E CONTRACTOR FURNISHED, TYPE ***SIGN (F)	57.000 SF	17.00000		969.00	
0110	4072000000-E SUPPORTS, 3-LB STEEL U-CHANNEL	755.000 LF	5.00000		3,775.00	
0111	4078000000-E SUPPORTS, 2-LB STEEL U-CHANNEL	7.000 EA	42.00000		294.00	
0112	4096000000-N SIGN ERECTION, TYPE D	12.000 EA	83.00000		996.00	

Contract ID: C203207 Project(s): FRA-FR-HSR-0006-10-
Letting Date: 10-15-13 Call Order: 018
Bidder: 3740 - Blythe Development Co.

Line No.	Item Description	Approx. Quantity and Units	Unit Price Dollars	Unit Price Cts	Bid Amount Dollars	Bid Amount Ct
0113	4102000000-N SIGN ERECTION, TYPE E	75.000 EA	50.00000		3,750.00	
0114	4155000000-N DISPOSAL OF SIGN SYSTEM, U- CHANNEL	35.000 EA	2.00000		70.00	
0115	4400000000-E WORK ZONE SIGNS (STATIONARY)	1,952.000 SF	4.00000		7,808.00	
0116	4405000000-E WORK ZONE SIGNS (PORTABLE)	950.000 SF	9.00000		8,550.00	
0117	4410000000-E WORK ZONE SIGNS (BARRICADE MOUNTED)	269.000 SF	5.00000		1,345.00	
0118	4415000000-N FLASHING ARROW BOARD	1.000 EA	2,600.00000		2,600.00	
0119	4420000000-N PORTABLE CHANGEABLE MESSAGE SIGN	4.000 EA	11,000.00000		44,000.00	
0120	4430000000-N DRUMS	189.000 EA	35.00000		6,615.00	
0121	4435000000-N CONES	165.000 EA	18.00000		2,970.00	
0122	4445000000-E BARRICADES (TYPE III)	926.000 LF	20.00000		18,520.00	
0123	4455000000-N FLAGGER	135.000 DAY	160.00000		21,600.00	
0124	4490000000-E PORTABLE CONCRETE BARRIER (ANCHORED)	1,640.000 LF	31.00000		50,840.00	

Line No.	Item Description	Approx. Quantity and Units	Unit Price Dollars	Unit Price Cts	Bid Amount Dollars	Bid Amount Ct
0125	4516000000-N SKINNY DRUM	101.000 EA	31.00000		3,131.00	
0126	4520000000-N TUBULAR MARKERS (FIXED)	152.000 EA	42.00000		6,384.00	
0127	4685000000-E THERMOPLASTIC PAVEMENT MARKINGLINES (4", 90 MILS)	5,818.000 LF	0.70000		4,072.60	
0128	4686000000-E THERMOPLASTIC PAVEMENT MARKING LINES (4", 120 MILS)	18,829.000 LF	0.75000		14,121.75	
0129	4695000000-E THERMOPLASTIC PAVEMENT MARKINGLINES (8", 90 MILS)	945.000 LF	1.60000		1,512.00	
0130	4697000000-E THERMOPLASTIC PAVEMENT MARKINGLINES (8", 120 MILS)	265.000 LF	2.20000		583.00	
0131	4705000000-E THERMOPLASTIC PAVEMENT MARKINGLINES (16", 120 MILS)	824.000 LF	3.30000		2,719.20	
0132	4710000000-E THERMOPLASTIC PAVEMENT MARKINGLINES (24", 120 MILS)	1,095.000 LF	4.70000		5,146.50	
0133	4721000000-E THERMOPLASTIC PAVEMENT MARKINGCHARACTER (120 MILS)	10.000 EA	166.00000		1,660.00	
0134	4725000000-E THERMOPLASTIC PAVEMENT MARKINGSYMBOL (90 MILS)	54.000 EA	99.00000		5,346.00	
0135	4810000000-E PAINT PAVEMENT MARKING LINES (4")	29,386.000 LF	0.20000		5,877.20	

Contract ID: C203207 Project(s): FRA-FR-HSR-0006-10-
Letting Date: 10-15-13 Call Order: 018
Bidder: 3740 - Blythe Development Co.

Line No.	Item Description	Approx. Quantity and Units	Unit Price Dollars	Unit Price Cts	Bid Amount Dollars	Bid Amount Ct
0136	4820000000-E PAINT PAVEMENT MARKING LINES (8")	378.000 LF	0.50000		189.00	
0137	4830000000-E PAINT PAVEMENT MARKING LINES (16")	448.000 LF	1.10000		492.80	
0138	4835000000-E PAINT PAVEMENT MARKING LINES (24")	785.000 LF	2.20000		1,727.00	
0139	4840000000-N PAINT PAVEMENT MARKING CHARAC-TER	20.000 EA	27.00000		540.00	
0140	4845000000-N PAINT PAVEMENT MARKING SYMBOL	26.000 EA	27.00000		702.00	
0141	4850000000-E REMOVAL OF PAVEMENT MARKING LINES (4")	10,422.000 LF	1.00000		10,422.00	
0142	4870000000-E REMOVAL OF PAVEMENT MARKING LINES (24")	24.000 LF	5.50000		132.00	
0143	4875000000-N REMOVAL OF PAVEMENT MARKING SYMBOLS & CHARACTERS	4.000 EA	160.00000		640.00	
0144	4900000000-N PERMANENT RAISED PAVEMENT MARKERS	401.000 EA	4.40000		1,764.40	
0145	5319000000-E CLASS B CONCRETE FOR ENCASING UTILITY LINES	1.500 CY	150.00000		225.00	
0146	5325600000-E 6" WATER LINE	4,314.000 LF	55.00000		237,270.00	
0147	5325800000-E 8" WATER LINE	432.000 LF	70.00000		30,240.00	

Contract ID: C203207 Project(s): FRA-FR-HSR-0006-10-
Letting Date: 10-15-13 Call Order: 018
Bidder: 3740 - Blythe Development Co.

Line No.	Item Description	Approx. Quantity and Units	Unit Price Dollars	Unit Price Cts	Bid Amount Dollars	Bid Amount Ct
0148	5326200000-E 12" WATER LINE	742.000 LF	115.00000		85,330.00	
0149	5540000000-E 6" VALVE	9.000 EA	820.00000		7,380.00	
0150	5558000000-E 12" VALVE	2.000 EA	2,200.00000		4,400.00	
0151	5571400000-E 4" TAPPING VALVE	1.000 EA	2,200.00000		2,200.00	
0152	5571600000-E 6" TAPPING VALVE	4.000 EA	2,500.00000		10,000.00	
0153	5571800000-E 8" TAPPING VALVE	1.000 EA	3,200.00000		3,200.00	
0154	5589200000-E 2" AIR RELEASE VALVE	2.000 EA	2,400.00000		4,800.00	
0155	5606000000-E 2" BLOW OFF	2.000 EA	2,000.00000		4,000.00	
0156	5648000000-N RELOCATE WATER METER	11.000 EA	600.00000		6,600.00	
0157	5649000000-N RECONNECT WATER METER	24.000 EA	800.00000		19,200.00	
0158	5666000000-E FIRE HYDRANT	1.000 EA	3,400.00000		3,400.00	
0159	5672000000-N RELOCATE FIRE HYDRANT	10.000 EA	1,150.00000		11,500.00	

Contract ID: C203207 Project(s): FRA-FR-HSR-0006-10-
Letting Date: 10-15-13 Call Order: 018
Bidder: 3740 - Blythe Development Co.

Line No.	Item Description	Approx. Quantity and Units	Unit Price Dollars	Unit Price Cts	Bid Amount Dollars	Bid Amount Ct
0160	5691300000-E 8" SANITARY GRAVITY SEWER	1,188.000 LF	40.00000		47,520.00	
0161	5709100000-E 2" FORCE MAIN SEWER	10.000 LF	25.00000		250.00	
0162	5709300000-E 6" FORCE MAIN SEWER	460.000 LF	44.00000		20,240.00	
0163	5709400000-E 8" FORCE MAIN SEWER	195.000 LF	54.00000		10,530.00	
0164	5768000000-N SANITARY SEWER CLEAN-OUT	4.000 EA	1,300.00000		5,200.00	
0165	5775000000-E 4' DIA UTILITY MANHOLE	12.000 EA	2,320.00000		27,840.00	
0166	5781000000-E UTILITY MANHOLE WALL, 4' DIA	46.000 LF	150.00000		6,900.00	
0167	5800000000-E ABANDON 6" UTILITY PIPE	2,388.000 LF	4.05000		9,671.40	
0168	5801000000-E ABANDON 8" UTILITY PIPE	1,915.000 LF	5.20000		9,958.00	
0169	5804000000-E ABANDON 12" UTILITY PIPE	1,007.000 LF	8.15000		8,207.05	
0170	5811000000-E ABANDON 18" UTILITY PIPE	100.000 LF	27.00000		2,700.00	
0171	5815000000-N REMOVE WATER METER	5.000 EA	190.00000		950.00	

Contract ID: C203207 Project(s): FRA-FR-HSR-0006-10-
Letting Date: 10-15-13 Call Order: 018
Bidder: 3740 - Blythe Development Co.

Line No.	Item Description	Approx. Quantity and Units	Unit Price Dollars	Unit Price Cts	Bid Amount Dollars	Bid Amount Ct
0172	5815500000-N REMOVE FIRE HYDRANT	2.000 EA	530.00000		1,060.00	
0173	5816000000-N ABANDON UTILITY MANHOLE	1.000 EA	1,500.00000		1,500.00	
0174	5828000000-N REMOVE UTILITY MANHOLE	4.000 EA	1,100.00000		4,400.00	
0175	5835700000-E 16" ENCASEMENT PIPE	700.000 LF	95.00000		66,500.00	
0176	5835800000-E 18" ENCASEMENT PIPE	535.000 LF	95.00000		50,825.00	
0177	5835900000-E 20" ENCASEMENT PIPE	96.000 LF	125.00000		12,000.00	
0178	5836000000-E 24" ENCASEMENT PIPE	510.000 LF	125.00000		63,750.00	
0179	5871900000-E TRENCHLESS INSTALLATION OF 16"IN SOIL	351.000 LF	175.00000		61,425.00	
0180	5871910000-E TRENCHLESS INSTALLATION OF 16"NOT IN SOIL	349.000 LF	425.00000		148,325.00	
0181	5872000000-E TRENCHLESS INSTALLATION OF 18"IN SOIL	268.000 LF	195.00000		52,260.00	
0182	5872010000-E TRENCHLESS INSTALLATION OF 18"NOT IN SOIL	267.000 LF	625.00000		166,875.00	
0183	5872200000-E TRENCHLESS INSTALLATION OF 24"IN SOIL	175.000 LF	195.00000		34,125.00	

Contract ID: C203207 Project(s): FRA-FR-HSR-0006-10-
Letting Date: 10-15-13 Call Order: 018
Bidder: 3740 - Blythe Development Co.

Line No.	Item Description	Approx. Quantity and Units	Unit Price Dollars	Unit Price Cts	Bid Amount Dollars	Bid Amount Ct
0184	5872210000-E TRENCHLESS INSTALLATION OF 24"NOT IN SOIL	175.000 LF	425.00000		74,375.00	
0185	6000000000-E TEMPORARY SILT FENCE	66,600.000 LF	2.00000		133,200.00	
0186	6006000000-E STONE FOR EROSION CONTROL, CLASS A	28,000.000 TON	40.00000		1,120,000.00	
0187	6009000000-E STONE FOR EROSION CONTROL, CLASS B	17,180.000 TON	45.00000		773,100.00	
0188	6012000000-E SEDIMENT CONTROL STONE	7,720.000 TON	33.00000		254,760.00	
0189	6015000000-E TEMPORARY MULCHING	214.500 ACR	525.00000		112,612.50	
0190	6018000000-E SEED FOR TEMPORARY SEEDING	5,050.000 LB	2.75000		13,887.50	
0191	6021000000-E FERTILIZER FOR TEMPORARY SEED-ING	22.500 TON	900.00000		20,250.00	
0192	6024000000-E TEMPORARY SLOPE DRAINS	3,215.000 LF	10.00000		32,150.00	
0193	6029000000-E SAFETY FENCE	600.000 LF	2.00000		1,200.00	
0194	6030000000-E SILT EXCAVATION	47,800.000 CY	2.50000		119,500.00	
0195	6036000000-E MATTING FOR EROSION CONTROL	255,420.000 SY	1.40000		357,588.00	

Contract ID: C203207 Project(s): FRA-FR-HSR-0006-10-
Letting Date: 10-15-13 Call Order: 018
Bidder: 3740 - Blythe Development Co.

Line No.	Item Description	Approx. Quantity and Units	Unit Price Dollars	Unit Price Cts	Bid Amount Dollars	Bid Amount Ct
0196	6037000000-E COIR FIBER MAT	235.000 SY	5.80000		1,363.00	
0197	6038000000-E PERMANENT SOIL REINFORCEMENT MAT	2,200.000 SY	5.80000		12,760.00	
0198	6042000000-E 1/4" HARDWARE CLOTH	4,640.000 LF	2.60000		12,064.00	
0199	6070000000-N SPECIAL STILLING BASINS	24.000 EA	775.00000		18,600.00	
0200	6071010000-E WATTLE	140.000 LF	6.35000		889.00	
0201	6071012000-E COIR FIBER WATTLE	9,490.000 LF	7.35000		69,751.50	
0202	6071020000-E POLYACRYLAMIDE (PAM)	8,640.000 LB	8.70000		75,168.00	
0203	6071030000-E COIR FIBER BAFFLE	2,390.000 LF	5.10000		12,189.00	
0204	6071050000-E **" SKIMMER (1-1/2")	15.000 EA	880.00000		13,200.00	
0205	6071050000-E **" SKIMMER (2")	3.000 EA	1,000.00000		3,000.00	
0206	6071050000-E **" SKIMMER (2-1/2")	1.000 EA	1,000.00000		1,000.00	
0207	6084000000-E SEEDING & MULCHING	210.000 ACR	1,500.00000		315,000.00	

Contract ID: C203207 Project(s): FRA-FR-HSR-0006-10-
Letting Date: 10-15-13 Call Order: 018
Bidder: 3740 - Blythe Development Co.

Line No.	Item Description	Approx. Quantity and Units	Unit Price Dollars	Unit Price Cts	Bid Amount Dollars	Bid Amount Ct
0208	6087000000-E MOWING	132.000 ACR	80.00000		10,560.00	
0209	6090000000-E SEED FOR REPAIR SEEDING	2,200.000 LB	3.70000		8,140.00	
0210	6093000000-E FERTILIZER FOR REPAIR SEEDING	6.250 TON	8.00000		50.00	
0211	6096000000-E SEED FOR SUPPLEMENTAL SEEDING	3,250.000 LB	3.00000		9,750.00	
0212	6108000000-E FERTILIZER TOPDRESSING	96.750 TON	895.00000		86,591.25	
0213	6114500000-N SPECIALIZED HAND MOWING	80.000 MHR	55.00000		4,400.00	
0214	6117000000-N RESPONSE FOR EROSION CONTROL	350.000 EA	116.00000		40,600.00	
0215	6132000000-N GENERIC EROSION CONTROL ITEM SUPPLEMENTAL RESPONSE FOR EROSION CONTROL	30.000 EA	400.00000		12,000.00	
0216	7060000000-E SIGNAL CABLE	4,060.000 LF	2.50000		10,150.00	
0217	7120000000-E VEHICLE SIGNAL HEAD (12", 3 SECTION)	38.000 EA	800.00000		30,400.00	
0218	7132000000-E VEHICLE SIGNAL HEAD (12", 4 SECTION)	7.000 EA	945.00000		6,615.00	

Contract ID: C203207 Project(s): FRA-FR-HSR-0006-10-
Letting Date: 10-15-13 Call Order: 018
Bidder: 3740 - Blythe Development Co.

Line No.	Item Description	Approx. Quantity and Units	Unit Price Dollars	Unit Price Cts	Bid Amount Dollars	Bid Amount Ct
0219	7144000000-E VEHICLE SIGNAL HEAD (12", 5 SECTION)	2.000 EA	1,140.00000		2,280.00	
0220	7252000000-E MESSENGER CABLE (1/4")	80.000 LF	2.80000		224.00	
0221	7264000000-E MESSENGER CABLE (3/8")	1,150.000 LF	3.30000		3,795.00	
0222	7288000000-E PAVED TRENCHING (**********) (1, 2")	120.000 LF	22.00000		2,640.00	
0223	7300000000-E UNPAVED TRENCHING (**********) (1, 2")	2,470.000 LF	5.50000		13,585.00	
0224	7301000000-E DIRECTIONAL DRILL (**********) (1, 2")	130.000 LF	16.60000		2,158.00	
0225	7301000000-E DIRECTIONAL DRILL (**********) (2, 2")	310.000 LF	19.00000		5,890.00	
0226	7324000000-N JUNCTION BOX (STANDARD SIZE)	41.000 EA	270.00000		11,070.00	
0227	7348000000-N JUNCTION BOX (OVER-SIZED, HEA-VY DUTY)	8.000 EA	440.00000		3,520.00	
0228	7360000000-N WOOD POLE	10.000 EA	800.00000		8,000.00	
0229	7372000000-N GUY ASSEMBLY	22.000 EA	380.00000		8,360.00	
0230	7408000000-E 1" RISER WITH WEATHERHEAD	3.000 EA	330.00000		990.00	

Line No.	Item Description	Approx. Quantity and Units	Unit Price Dollars	Unit Price Cts	Bid Amount Dollars	Bid Amount Ct
0231	7420000000-E 2" RISER WITH WEATHERHEAD	15.000 EA	440.00000		6,600.00	
0232	7444000000-E INDUCTIVE LOOP SAWCUT	3,590.000 LF	7.00000		25,130.00	
0233	7456000000-E LEAD-IN CABLE (**********) (14-2)	7,135.000 LF	1.60000		11,416.00	
0234	7590000000-N METAL POLE WITH DUAL MAST ARM	2.000 EA	15,000.00000		30,000.00	
0235	7613000000-N SOIL TEST	2.000 EA	1,000.00000		2,000.00	
0236	7614100000-E DRILLED PIER FOUNDATION (14-2)	12.000 CY	700.00000		8,400.00	
0237	7631000000-N MAST ARM WITH METAL POLE DE- SIGN	2.000 EA	55.00000		110.00	
0238	7636000000-N SIGN FOR SIGNALS	16.000 EA	270.00000		4,320.00	
0239	7675000000-N LED BLANKOUT SIGN	5.000 EA	3,500.00000		17,500.00	
0240	7684000000-N SIGNAL CABINET FOUNDATION	5.000 EA	995.00000		4,975.00	
0241	7756000000-N CONTROLLER WITH CABINET (TYPE 2070L, BASE MOUNTED)	5.000 EA	12,750.00000		63,750.00	
0242	7780000000-N DETECTOR CARD (TYPE 2070L)	23.000 EA	110.00000		2,530.00	

Line No.	Item Description	Approx. Quantity and Units	Unit Price Dollars	Unit Price Cts	Bid Amount Dollars	Bid Amount Ct
0243	7901000000-N CABINET BASE EXTENDER	5.000 EA	380.00000		1,900.00	
0244	7948000000-N TRAFFIC SIGNAL REMOVAL	1.000 EA	1,220.00000		1,220.00	
0245	7990000000-E GENERIC SIGNAL ITEM 2" RIGID METALLIC CONDUIT	175.000 LF	22.00000		3,850.00	
0272	0192000000-N PROOF ROLLING	60.000 HR	126.00000		7,560.00	
	Section 0001 Total				17,050,260.15	

Section 0003 WALL ITEMS

Alt Group

0246	8801000000-E MSE RETAINING WALL NO **** (A)	470.000 SF	258.00000		121,260.00	
0247	8839000000-E GENERIC RETAINING WALL ITEM CONC BARRIER WITH MOMENT SLAB	1,450.000 LF	33.00000		47,850.00	
	Section 0003 Total				169,110.00	

Section 0004 STRUCTURE ITEMS

Alt Group

0248	8014000000-N TEMPORARY RAILROAD SHORING FORBENT ***, STATION ********** (ABUT 1, 9404+63.64 -M1-)	LUMP	LUMP		93,500.00	
0249	8014000000-N TEMPORARY RAILROAD SHORING FORBENT ***, STATION ********** (ABUT 2, 9404+63.64 -M1-)	LUMP	LUMP		93,500.00	

Contract ID: C203207 Project(s): FRA-FR-HSR-0006-10-
Letting Date: 10-15-13 Call Order: 018
Bidder: 3740 - Blythe Development Co.

Line No.	Item Description	Approx. Quantity and Units	Unit Price Dollars	Unit Price Cts	Bid Amount Dollars	Bid Amount Ct
0250	8014000000-N TEMPORARY RAILROAD SHORING FORBENT ***, STATION ********** (PIER 1, 9404+63.64 -M1-)	LUMP	LUMP		165,000.00	
0251	8014000000-N TEMPORARY RAILROAD SHORING FORBENT ***, STATION ********** (PIER 2, 9404+63.64 -M1-)	LUMP	LUMP		165,525.00	
0252	8091000000-N FOUNDATION EXCAVATION FOR BENT** AT STATION ********** (PIER 1, 9404+23.91 -M1-)	LUMP	LUMP		20,750.00	
0253	8091000000-N FOUNDATION EXCAVATION FOR BENT** AT STATION ********** (PIER 2, 9404+88.19 -M1-)	LUMP	LUMP		20,750.00	
0254	8112730000-N PDA TESTING	4.000 EA	3,500.00000		14,000.00	
0255	8147000000-E REINFORCED CONCRETE DECK SLAB	4,656.000 SF	39.00000		181,584.00	
0256	8175000000-E CLASS AA CONCRETE (BRIDGE)	398.700 CY	440.00000		175,428.00	
0257	8217000000-E REINFORCING STEEL (BRIDGE)	64,286.000 LB	0.75000		48,214.50	
0258	8238000000-E SPIRAL COLUMN REINFORCING STEEL (BRIDGE)	4,295.000 LB	1.15000		4,939.25	
0259	8280000000-E APPROX ..... LBS STRUCTURALSTEEL	LUMP	LUMP		710,000.00	
0260	8294000000-N PAINTING OF STRUCTURAL STEEL	LUMP	LUMP		114,000.00	

Line No.	Item Description	Approx. Quantity and Units	Unit Price Dollars	Unit Price Cts	Bid Amount Dollars	Bid Amount Ct
0261	8364000000-E HP12X53 STEEL PILES	9,060.000 LF	43.00000		389,580.00	
0262	8453000000-E METHOD B DAMPPROOFING	422.000 SY	45.00000		18,990.00	
0263	8517000000-E 1'-**"X *****" CONCRETE PARA- PET (1'-0" X 2'-1")	254.800 LF	141.00000		35,926.80	
0264	8531000000-E 4" SLOPE PROTECTION	355.000 SY	75.00000		26,625.00	
0265	8741000000-N STRUCTURE DRAINAGE SYSTEM AT STA********** (9404+63.64 -M1-)	LUMP	LUMP		82,500.00	
0266	8860000000-N GENERIC STRUCTURE ITEM 4" DIAMETER SIGNAL CONDUIT SYSTEM AT STA 9404+63.64 -M1-	LUMP	LUMP		9,500.00	
0267	8860000000-N GENERIC STRUCTURE ITEM SELF-LUBRICATING EXPANSION BEARING ASSEMBLIES	LUMP	LUMP		132,100.00	
0268	8867000000-E GENERIC STRUCTURE ITEM METAL FENCE & HANDRAIL	327.500 LF	365.00000		119,537.50	
0269	8893000000-E GENERIC STRUCTURE ITEM 1" ASPHALT PLANKING PROTECTIVE COURSE FOR DECK	468.000 SY	30.00000		14,040.00	
0270	8893000000-E GENERIC STRUCTURE ITEM MEMBRANE LAYER WATERPROOFING FOR DECK	513.000 SY	65.00000		33,345.00	

Contract ID: C203207 Project(s): FRA-FR-HSR-0006-10-
Letting Date: 10-15-13 Call Order: 018
Bidder: 3740 - Blythe Development Co.

Line No.	Item Description	Approx. Quantity and Units	Unit Price Dollars	Unit Price Cts	Bid Amount Dollars	Bid Amount Ct
0271	8893000000-E GENERIC STRUCTURE ITEM TWO-PART MEMBRANE WATERPROOF- ING SYSTEM	50.000 SY	105.00000		5,250.00	
	Section 0004 Total				2,674,585.05	
	Bid Total				19,893,955.20	

NON-COLLUSION AND DEBARMENT CERTIFICATION

The bidder certifies that neither he, nor any official, agent or employee of the bidder has entered into any agreement, participated in any collusion, or otherwise taken any action which is in restraint of free competitive bidding in connection with this bid, and that the bidder intends to do the work with its own bonafide employees or subcontractors and is not bidding for the benefit of another contractor. In addition, submitting this electronic bid constitutes the bidder's certification of Status under penalty of perjury under the laws of the United States and in accordance with the Debarment Certification on file with the Department.

By submitting this bid, the bidder certifies to the best of his knowledge and belief that he and his principals:

a. Are not presently debarred, suspended, proposed for debarment, declared ineligible, or voluntarily excluded from covered transactions by any Federal department or agency;

b. Have not within a three-year period preceding this proposal been convicted of or had a civil judgment rendered against them for commission of fraud or a criminal offense in connection with obtaining, attempting to obtain, or performing a public (Federal, State or local) transaction or contract under a public transaction; violation of Federal or State antitrust statutes or commission of embezzlement, theft, forgery, bribery, falsification or destruction of records; making false statements; or receiving stolen property;

c. Are not presently indicted for or otherwise criminally or civilly charged by a governmental entity (Federal, State or local) with commission of any of the offenses enumerated in paragraph b. of this certification; and

d. Have not within a three-year period preceding this proposal had one or more public transactions (Federal, State or local) terminated for cause or default.

Where the prospective bidder is unable to certify to any of the statements in this certification, the bidder shall submit an explanation in the blanks provided herein. The explanation will not necessarily result in denial of participation in a contract.

Explanation:
NOT ANSWERED
NOT ANSWERED
NOT ANSWERED
NOT ANSWERED

If the prequalified bidder's status changes, he shall immediately submit a new fully executed non-collusion affidavit and debarment certification with an explanation of the change to the Contract Office prior to submitting the bid.

Failure to furnish a certification or an explanation will be grounds for rejection of a bid

AWARD LIMITS ON MULTIPLE PROJECTS

By answering YES to this statement, the bidder acknowleges that they are using the award limits on multiple projects. No

A bidder who desires to bid on more than one project on which bids are to be opened on the same date, and who also desires to avoid receiving an award of more projects than he is equipped to handle, may bid on any number of projects but may limit the total amount of work awarded to him on selected projects by completing the AWARD LIMITS ON MULTIPLE PROJECTS.

The Award Limits on Multiple Projects must be filled in on each project bid for which the Bidder desires protection.

It is the desire of the Bidder to be awarded contracts, the value of which

will not exceed a total of NOT ANSWERED for those

projects indicated herein, for which bids will be opened on (MM/DD/YY)

The Award Limits shall apply to the following projects:

Contract Number	County
NOT ANSWERED	
NOT ANSWERED	
NOT ANSWERED	
NOT ANSWERED	
NOT ANSWERED	
NOT ANSWERED	

It is agreed that if I am (we are) the low Bidder(s) on indicated projects, the total value of which is more than the above stipulated award limits, the Board of Transportation will award me (us) projects from among those indicated that have a total value not to exceed the award limit and will result in the lowest total bids to the Department of Transportation.

PROPOSAL: C203207
LETTING: L131015 CALL: 018
VENDOR: 3740 Blythe Development Co.

LINE NO.	ITEM NO.	ITEM DESC.	UNIT TYPE	SUBCONTRACTOR QUANTITY	SUBCONTRACTOR UNIT PRICE	EXTENDED AMOUNT
DBE SUBCONTRACTOR: 3765 STAY ALERT SAFETY SERVICES INC						
Will Use Quote: Yes						
0108	4025000000-E	CONTR FURN,	SF	345.000	14.95000	5157.75
0109	4025000000-E	CONTR FURN,	SF	57.000	15.95000	909.15
0110	4072000000-E	SUPPORT, 3-L	LF	755.000	4.99000	3767.45
0111	4078000000-E	SUPPORT, 2-L	EA	7.000	38.00000	266.00
0112	4096000000-N	SIGN ERECTIO	EA	12.000	75.00000	900.00
0113	4102000000-N	SIGN ERECTIO	EA	75.000	45.00000	3375.00
0114	4155000000-N	DISPOSE SIGN	EA	35.000	2.00000	70.00
0115	4400000000-E	WORK ZONE SI	SF	1952.000	3.99000	7788.48
0116	4405000000-E	WORK ZONE SI	SF	950.000	8.85000	8407.50
0117	4410000000-E	WORK ZONE SI	SF	269.000	4.55000	1223.95
0118	4415000000-N	FLASHING ARR	EA	1.000	2350.00000	2350.00
0119	4420000000-N	PORTABLE CHA	EA	4.000	9850.00000	39400.00
0120	4430000000-N	DRUMS	EA	189.000	32.00000	6048.00
0121	4435000000-N	CONES	EA	165.000	15.85000	2615.25
0122	4445000000-E	BARRICADES (	LF	926.000	18.38000	17019.88
0125	4516000000-N	SKINNY DRUM	EA	101.000	28.00000	2828.00
0126	4520000000-N	TUBULAR MARK	EA	152.000	38.00000	5776.00

	DBE COMMITMENT TOTAL FOR SUBCONTRACTOR:					107,902.41 Committed
	DBE COMMITMENT TOTAL FOR VENDOR (SubContractor)					107,902
DBE SUBCONTRACTOR: 8233 GROUND EFFECTS, INC						
Will Use Quote: Yes						
0127	4685000000-E	THERMO PVT M	LF	5818.000	0.65000	3781.70
0128	4686000000-E	THERMO PVT M	LF	18829.000	0.68000	12803.72
0129	4695000000-E	THERMO PVT M	LF	945.000	1.50000	1417.50
0130	4697000000-E	THERMO PVT M	LF	265.000	2.00000	530.00
0131	4705000000-E	THERMO LINES	LF	824.000	3.00000	2472.00
0132	4710000000-E	24"WIDE THER	LF	1095.000	4.25000	4653.75
0133	4721000000-E	THERMO PVT M	EA	10.000	150.00000	1500.00
0134	4725000000-E	THERMO PVT S	EA	54.000	90.00000	4860.00
0135	4810000000-E	PAINT PVMT M	LF	29386.000	0.20000	5877.20
0136	4820000000-E	PAINT PVMT M	LF	378.000	0.50000	189.00
0137	4830000000-E	PAINT PVT MK	LF	448.000	1.00000	448.00
0138	4835000000-E	PAINT PVT MK	LF	785.000	2.00000	1570.00
0139	4840000000-N	PAINT PVT MK	EA	20.000	25.00000	500.00
0140	4845000000-N	PAINT PVT MK	EA	26.000	25.00000	650.00
0141	4850000000-E	LINE REMOVAL	LF	10422.000	1.00000	10422.00
0142	4870000000-E	LINE REMOVAL	LF	24.000	5.00000	120.00
0143	4875000000-N	REMOVAL OF S	EA	4.000	150.00000	600.00
0144	4900000000-N	PERM RAISED	EA	401.000	4.00000	1604.00

LINE NO.	ITEM NO.	ITEM DESC.	UNIT TYPE	SUBCONTRACTOR QUANTITY	SUBCONTRACTOR UNIT PRICE	EXTENDED AMOUNT
						53,998.87 Committed
	DBE COMMITMENT TOTAL FOR SUBCONTRACTOR:					
	DBE COMMITMENT TOTAL FOR VENDOR (SubContractor)					53,998.

DBE SUBCONTRACTOR: 11551 CAROLINA GUARDRAIL LLC
Will Use Quote: Yes

0092	3030000000-E	STL BM GUARD	LF	462.500	15.00000	6937.50
0093	3105000000-N	SBGR TERM SE	EA	20.000	50.00000	1000.00
0094	3150000000-N	ADDIT GUARDR	EA	15.000	15.25000	228.75
0095	3270000000-N	GR ANCHOR TY	EA	2.000	1975.00000	3950.00
0096	3317000000-N	GR ANCHOR TY	EA	2.000	1250.00000	2500.00
0097	3360000000-E	REMOVE EXIST	LF	179.000	2.00000	358.00
						14,974.25 Committed
	DBE COMMITMENT TOTAL FOR SUBCONTRACTOR:					
	DBE COMMITMENT TOTAL FOR VENDOR (SubContractor)					14,974.

DBE SUBCONTRACTOR: 10129 CONCRETE SPECIALTY CONTRACTORS INC.
Will Use Quote: Yes

0077	2535000000-E	**"X**" CONC	LF	580.000	14.84000	8607.20
0078	2542000000-E	1'-6" CONC C	LF	500.000	14.09000	7045.00
0079	2549000000-E	2'-6" CONC C	LF	6495.000	16.99000	110350.05
0080	2570000000-N	MODIFIED CON	EA	2.000	1510.41000	3020.82
0081	2591000000-E	4" CONCRETE	SY	3275.000	29.45000	96448.75
0082	2605000000-N	CONCRETE CUR	EA	47.000	1302.75000	61229.25
0083	2612000000-E	6" CONCRETE	SY	490.000	38.17000	18703.30
0084	2619000000-E	4" CONCRETE	SY	10.000	45.14000	451.40
0085	2738000000-E	GENERIC PAVI	SY	380.000	48.50000	18430.00
0086	2759000000-N	GENERIC PAVI	EA	1.000	1650.00000	1650.00
						325,935.77 Committed
	DBE COMMITMENT TOTAL FOR SUBCONTRACTOR:					
	DBE COMMITMENT TOTAL FOR VENDOR (SubContractor)					325,935

DBE SUBCONTRACTOR: 3080 CURTIN TRUCKING & DRAINAGE, INC.
Will Use Quote: Yes

0124	4490000000-E	PORT CONC BA	LF	1640.000	28.15000	46166.00
						46,166.00 Committed
	DBE COMMITMENT TOTAL FOR SUBCONTRACTOR:					
	DBE COMMITMENT TOTAL FOR VENDOR (SubContractor)					46,166.

DBE SUBCONTRACTOR: 10869 SK HAULING LLC
Will Use Quote: Yes

0003	0043000000-N	GRADING	LS	1.000	500000.00000	500000.00
0009	0195000000-E	SELECT GRANU	CY	6200.000	8.80000	54560.00
0045	1099700000-E	CLASS IV SUB	TON	6850.000	4.40000	30140.00
0107	3885000000-E	GENERIC TRAC	TON	127390.000	4.40000	560516.00
0186	6006000000-E	EROS CONTRL	TON	28000.000	4.75000	133000.00
0187	6009000000-E	EROS CONTRL	TON	17180.000	4.75000	81605.00

LINE NO.	ITEM NO.	ITEM DESC.	UNIT TYPE	SUBCONTRACTOR QUANTITY	SUBCONTRACTOR UNIT PRICE	EXTENDED AMOUNT
0188	6012000000-E	SEDIMENT CON	TON	7720.000	4.40000	33968.00

DBE COMMITMENT TOTAL FOR SUBCONTRACTOR: 1,393,789.00 Committed
DBE COMMITMENT TOTAL FOR VENDOR (SubContractor) 1,393,7

DBE SUBCONTRACTOR: 7138 EXPRESS LOGISTICS SERVICES, INC.
Will Use Quote: Yes

0052	1489000000-E	ASP CONC BAS	TON	6205.000	6.00000	37230.00
0053	1498000000-E	ASP CONC INT	TON	1640.000	6.00000	9840.00
0054	1519000000-E	ASP CONC SUR	TON	3550.000	6.00000	21300.00

DBE COMMITMENT TOTAL FOR SUBCONTRACTOR: 68,370.00 Committed
DBE COMMITMENT TOTAL FOR VENDOR (SubContractor) 68,370.

TOTAL DBE COMMITMENT FOR VENDOR: Entered: 10.11% or 2011136.30
Required: 10.00% or 1989395.52
<GOAL MET>

Contract Item Sheets For C203207

Line #	ItemNumber	Sec #	Description	Quantity Unit	Unit Bid Price	Amount Bid
			ROADWAY ITEMS			
0001	0000100000-N	800	MOBILIZATION	Lump Sum LS	1,000,000.00	1,000,000.00
0002	0000400000-N	801	CONSTRUCTION SURVEYING	Lump Sum LS	142,000.00	142,000.00
0003	0043000000-N	226	GRADING	Lump Sum LS	3,175,000.00	3,175,000.00
0004	0050000000-E	226	SUPPLEMENTARY CLEARING & GRUB-BING	4 ACR	8,310.00	33,240.00
0005	0057000000-E	226	UNDERCUT EXCAVATION	10,400 CY	9.00	93,600.00
0006	0127000000-N	SP	EMBANKMENT SETTLEMENT GAUGES	27 EA	3,885.00	104,895.00
0007	0134000000-E	240	DRAINAGE DITCH EXCAVATION	1,530 CY	3.10	4,743.00
0008	0141000000-E	240	BERM DITCH CONSTRUCTION	260 LF	4.65	1,209.00
0009	0195000000-E	265	SELECT GRANULAR MATERIAL	6,200 CY	44.00	272,800.00
0010	0196000000-E	270	GEOTEXTILE FOR SOIL STABILIZA-TION	7,100 SY	1.50	10,650.00
0011	0199000000-E	SP	TEMPORARY SHORING	3,760 SF	38.00	142,880.00
0012	0255000000-E	SP	GENERIC GRADING ITEM HAULING AND DISPOSAL OF PETROLEUM CONTAMINATED SOIL	100 TON	80.00	8,000.00
0013	0318000000-E	300	FOUNDATION CONDITIONING MATE-RIAL, MINOR STRUCTURES	837 TON	33.00	27,621.00
0014	0320000000-E	300	FOUNDATION CONDITIONING GEO-TEXTILE	1,360 SY	1.60	2,176.00
0015	0335200000-E	305	15" DRAINAGE PIPE	68 LF	32.00	2,176.00
0016	0366000000-E	310	15" RC PIPE CULVERTS, CLASS III	360 LF	34.00	12,240.00
0017	0378000000-E	310	24" RC PIPE CULVERTS, CLASS III	304 LF	43.00	13,072.00
0018	0384000000-E	310	30" RC PIPE CULVERTS, CLASS III	60 LF	60.00	3,600.00

Contract Item Sheets For C203207

Line #	ItemNumber	Sec #	Description	Quantity Unit	Unit Bid Price	Amount Bid
0019	0390000000-E	310	36" RC PIPE CULVERTS, CLASS III	44 LF	75.00	3,300.00
0020	0448200000-E	310	15" RC PIPE CULVERTS, CLASS IV	1,106 LF	34.00	37,604.00
0021	0448300000-E	310	18" RC PIPE CULVERTS, CLASS IV	8 LF	55.00	440.00
0022	0448500000-E	310	30" RC PIPE CULVERTS, CLASS IV	684 LF	65.00	44,460.00
0023	0448600000-E	310	36" RC PIPE CULVERTS, CLASS IV	32 LF	80.00	2,560.00
0024	0582000000-E	310	15" CS PIPE CULVERTS, 0.064" THICK	68 LF	47.00	3,196.00
0025	0588000000-E	310	18" CS PIPE CULVERTS, 0.064" THICK	196 LF	50.00	9,800.00
0026	0600000000-E	310	30" CS PIPE CULVERTS, 0.079" THICK	56 LF	60.00	3,360.00
0027	0986000000-E	SP	GENERIC PIPE ITEM 30" BCCM PIPE CULVERT, 0.079" THICK	100 LF	108.00	10,800.00
0028	0986000000-E	SP	GENERIC PIPE ITEM 36" WELDED STEEL PIPE, 0.5" THICK, GRADE B, IN SOIL	251 LF	400.00	100,400.00
0029	0986000000-E	SP	GENERIC PIPE ITEM 36" WELDED STEEL PIPE, 0.5" THICK, GRADE B, NOT IN SOIL	251 LF	400.00	100,400.00
0030	0986000000-E	SP	GENERIC PIPE ITEM 36" WELDED STEEL PIPE, 0.5" THICK, GRADE B, OPEN CUT	290 LF	150.00	43,500.00
0031	0986000000-E	SP	GENERIC PIPE ITEM 42" WELDED STEEL PIPE, 0.625" THICK, GRADE B, IN SOIL	85 LF	500.00	42,500.00
0032	0986000000-E	SP	GENERIC PIPE ITEM 42" WELDED STEEL PIPE, 0.625" THICK, GRADE B, NOT IN SOIL	85 LF	500.00	42,500.00
0033	0986000000-E	SP	GENERIC PIPE ITEM 42" WELDED STEEL PIPE, 0.625" THICK, GRADE B, OPEN CUT	213 LF	180.00	38,340.00
0034	0986000000-E	SP	GENERIC PIPE ITEM 48" WELDED STEEL PIPE, 0.625" THICK, GRADE B, IN SOIL	40 LF	600.00	24,000.00

Contract Item Sheets For C203207

Line #	ItemNumber	Sec #	Description	Quantity Unit	Unit Bid Price	Amount Bid
0035	0986000000-E	SP	GENERIC PIPE ITEM 48" WELDED STEEL PIPE, 0.625" THICK, GRADE B, NOT IN SOIL	40 LF	600.00	24,000.00
0036	0986000000-E	SP	GENERIC PIPE ITEM 48" WELDED STEEL PIPE, 0.625" THICK, GRADE B, OPEN CUT	64 LF	220.00	14,080.00
0037	0986000000-E	SP	GENERIC PIPE ITEM 54" WELDED STEEL PIPE, 0.75" THICK, GRADE B, IN SOIL	25 LF	850.00	21,250.00
0038	0986000000-E	SP	GENERIC PIPE ITEM 54" WELDED STEEL PIPE, 0.75" THICK, GRADE B, NOT IN SOIL	25 LF	850.00	21,250.00
0039	0986000000-E	SP	GENERIC PIPE ITEM 54" WELDED STEEL PIPE, 0.75" THICK, GRADE B, OPEN CUT	90 LF	300.00	27,000.00
0040	0992000000-E	SP	GENERIC PIPE ITEM 30" BCCM PIPE ELBOWS, 0.079" THICK	2 EA	1,100.00	2,200.00
0041	0995000000-E	340	PIPE REMOVAL	1,625 LF	20.00	32,500.00
0042	0996000000-N	350	PIPE CLEAN-OUT	4 EA	1,235.00	4,940.00
0043	1077000000-E	SP	#57 STONE	1,060 TON	33.00	34,980.00
0044	1099500000-E	505	SHALLOW UNDERCUT	3,250 CY	3.45	11,212.50
0045	1099700000-E	505	CLASS IV SUBGRADE STABILIZA-TION	6,850 TON	22.00	150,700.00
0046	1110000000-E	510	STABILIZER AGGREGATE	1,100 TON	22.00	24,200.00
0047	1121000000-E	520	AGGREGATE BASE COURSE	269 TON	30.00	8,070.00
0048	1220000000-E	545	INCIDENTAL STONE BASE	4,460 TON	26.00	115,960.00
0049	1275000000-E	600	PRIME COAT	72 GAL	5.00	360.00
0050	1297000000-E	607	MILLING ASPHALT PAVEMENT, ***" DEPTH (1-1/2")	3,500 SY	4.50	15,750.00
0051	1330000000-E	607	INCIDENTAL MILLING	13,285 SY	6.00	79,710.00

Contract Item Sheets For C203207

Line #	ItemNumber	Sec #	Description	Quantity Unit	Unit Bid Price	Amount Bid
0052	1489000000-E	610	ASPHALT CONC BASE COURSE, TYPE B25.0B	6,205 TON	60.00	372,300.00
0053	1498000000-E	610	ASPHALT CONC INTERMEDIATE COURSE, TYPE I19.0B	1,640 TON	75.00	123,000.00
0054	1519000000-E	610	ASPHALT CONC SURFACE COURSE, TYPE S9.5B	3,550 TON	65.00	230,750.00
0055	1575000000-E	620	ASPHALT BINDER FOR PLANT MIX	571 TON	625.00	356,875.00
0056	1693000000-E	654	ASPHALT PLANT MIX, PAVEMENT REPAIR	925 TON	125.00	115,625.00
0057	2000000000-N	806	RIGHT OF WAY MARKERS	109 EA	170.00	18,530.00
0058	2022000000-E	815	SUBDRAIN EXCAVATION	403.2 CY	20.00	8,064.00
0059	2033000000-E	815	SUBDRAIN FINE AGGREGATE	302.4 CY	15.00	4,536.00
0060	2044000000-E	815	6" PERFORATED SUBDRAIN PIPE	1,800 LF	18.00	32,400.00
0061	2070000000-N	815	SUBDRAIN PIPE OUTLET	15 EA	300.00	4,500.00
0062	2077000000-E	815	6" OUTLET PIPE	351 LF	22.00	7,722.00
0063	2209000000-E	838	ENDWALLS	117 CY	800.00	93,600.00
0064	2220000000-E	838	REINFORCED ENDWALLS	15 CY	1,200.00	18,000.00
0065	2275000000-E	SP	FLOWABLE FILL	336 CY	140.00	47,040.00
0066	2286000000-N	840	MASONRY DRAINAGE STRUCTURES	49 EA	1,100.00	53,900.00
0067	2308000000-E	840	MASONRY DRAINAGE STRUCTURES	11.97 LF	200.00	2,394.00
0068	2354200000-N	840	FRAME WITH GRATE, STD 840.24	1 EA	280.00	280.00
0069	2364000000-N	840	FRAME WITH TWO GRATES, STD 840.16	8 EA	450.00	3,600.00
0070	2366000000-N	840	FRAME WITH TWO GRATES, STD 840.24	2 EA	400.00	800.00

Contract Item Sheets For C203207

Line #	ItemNumber	Sec #	Description	Quantity Unit	Unit Bid Price	Amount Bid
0071	2374000000-N	840	FRAME WITH GRATE & HOOD, STD 840.03, TYPE ** (E)	9 EA	490.00	4,410.00
0072	2374000000-N	840	FRAME WITH GRATE & HOOD, STD 840.03, TYPE ** (F)	14 EA	515.00	7,210.00
0073	2374000000-N	840	FRAME WITH GRATE & HOOD, STD 840.03, TYPE ** (G)	10 EA	515.00	5,150.00
0074	2396000000-N	840	FRAME WITH COVER, STD 840.54	11 EA	345.00	3,795.00
0075	2451000000-N	852	CONCRETE TRANSITIONAL SECTION FOR DROP INLET	4 EA	555.00	2,220.00
0076	2484000000-E	SP	GENERIC DRAINAGE ITEM SUBSURFACE DRAIN	5,265 LF	20.00	105,300.00
0077	2535000000-E	846	**"X **" CONCRETE CURB (8" X 12")	580 LF	17.00	9,860.00
0078	2542000000-E	846	1'-6" CONCRETE CURB & GUTTER	500 LF	15.00	7,500.00
0079	2549000000-E	846	2'-6" CONCRETE CURB & GUTTER	6,495 LF	18.00	116,910.00
0080	2570000000-N	SP	MODIFIED CONCRETE FLUME	2 EA	1,600.00	3,200.00
0081	2591000000-E	848	4" CONCRETE SIDEWALK	3,275 SY	32.00	104,800.00
0082	2605000000-N	848	CONCRETE CURB RAMP	47 EA	1,400.00	65,800.00
0083	2612000000-E	848	6" CONCRETE DRIVEWAY	490 SY	42.00	20,580.00
0084	2619000000-E	850	4" CONCRETE PAVED DITCH	10 SY	50.00	500.00
0085	2738000000-E	SP	GENERIC PAVING ITEM SPECIAL MONOLITHIC CONCRETE ISLAND	380 SY	53.00	20,140.00
0086	2759000000-N	SP	GENERIC PAVING ITEM CONCRETE FLUME	1 EA	1,800.00	1,800.00
0087	2759000000-N	SP	GENERIC PAVING ITEM PRECAST CONCRETE PARKING BUMP-ER	24 EA	55.00	1,320.00

Contract Item Sheets For C203207

Line #	ItemNumber	Sec #	Description	Quantity Unit	Unit Bid Price	Amount Bid
0088	2830000000-N	858	ADJUSTMENT OF MANHOLES	12 EA	270.00	3,240.00
0089	2845000000-N	858	ADJUSTMENT OF METER BOXES OR VALVE BOXES	20 EA	240.00	4,800.00
0090	2920000000-N	859	CONVERT EXISTING DROP INLET TO CATCH BASIN	1 EA	900.00	900.00
0091	2995000000-N	SP	GENERIC DRAINAGE ITEM CONVERT EXISTING CATCH BASIN TO TRAFFIC BEARING JUNCTION BOX WITH MANHOLE	5 EA	900.00	4,500.00
0092	3030000000-E	862	STEEL BM GUARDRAIL	462.5 LF	16.00	7,400.00
0093	3105000000-N	862	STEEL BM GUARDRAIL TERMINAL SECTIONS	20 EA	55.00	1,100.00
0094	3150000000-N	862	ADDITIONAL GUARDRAIL POSTS	15 EA	16.00	240.00
0095	3270000000-N	SP	GUARDRAIL ANCHOR UNITS, TYPE 350	2 EA	2,200.00	4,400.00
0096	3317000000-N	862	GUARDRAIL ANCHOR UNITS, TYPE B-77	2 EA	1,300.00	2,600.00
0097	3360000000-E	863	REMOVE EXISTING GUARDRAIL	179 LF	2.00	358.00
0098	3536000000-E	866	CHAIN LINK FENCE, 48" FABRIC	312 LF	10.00	3,120.00
0099	3542000000-E	866	METAL LINE POSTS FOR 48" CHAIN LINK FENCE	27 EA	24.00	648.00
0100	3548000000-E	866	METAL TERMINAL POSTS FOR 48" CHAIN LINK FENCE	3 EA	72.00	216.00
0101	3563000000-E	SP	TEMP **" WOVEN WIRE FENCE, COMPLETE W/POSTS (60")	190 LF	7.00	1,330.00
0102	3578000000-N	SP	GENERIC FENCING ITEM RIGHT OF WAY GATE	7 EA	665.00	4,655.00
0103	3628000000-E	876	RIP RAP, CLASS I	1,530 TON	47.00	71,910.00
0104	3649000000-E	876	RIP RAP, CLASS B	808 TON	45.00	36,360.00

Contract Item Sheets For C203207

Line #	ItemNumber	Sec #	Description	Quantity Unit	Unit Bid Price	Amount Bid
0105	3656000000-E	876	GEOTEXTILE FOR DRAINAGE	9,640 SY	2.00	19,280.00
0106	3832000000-E	SP	RAILROAD TRACK TO BE REMOVED	5,670 TF	12.00	68,040.00
0107	3885000000-E	SP	GENERIC TRACKWORK ITEM SUB-BALLAST	127,390 TON	25.00	3,184,750.00
0108	4025000000-E	901	CONTRACTOR FURNISHED, TYPE *** SIGN (E)	345 SF	16.00	5,520.00
0109	4025000000-E	901	CONTRACTOR FURNISHED, TYPE *** SIGN (F)	57 SF	17.00	969.00
0110	4072000000-E	903	SUPPORTS, 3-LB STEEL U-CHANNEL	755 LF	5.00	3,775.00
0111	4078000000-E	903	SUPPORTS, 2-LB STEEL U-CHANNEL	7 EA	42.00	294.00
0112	4096000000-N	904	SIGN ERECTION, TYPE D	12 EA	83.00	996.00
0113	4102000000-N	904	SIGN ERECTION, TYPE E	75 EA	50.00	3,750.00
0114	4155000000-N	907	DISPOSAL OF SIGN SYSTEM, U-CHANNEL	35 EA	2.00	70.00
0115	4400000000-E	1110	WORK ZONE SIGNS (STATIONARY)	1,952 SF	4.00	7,808.00
0116	4405000000-E	1110	WORK ZONE SIGNS (PORTABLE)	950 SF	9.00	8,550.00
0117	4410000000-E	1110	WORK ZONE SIGNS (BARRICADE MOUNTED)	269 SF	5.00	1,345.00
0118	4415000000-N	1115	FLASHING ARROW BOARD	1 EA	2,600.00	2,600.00
0119	4420000000-N	1120	PORTABLE CHANGEABLE MESSAGE SIGN	4 EA	11,000.00	44,000.00
0120	4430000000-N	1130	DRUMS	189 EA	35.00	6,615.00
0121	4435000000-N	1135	CONES	165 EA	18.00	2,970.00
0122	4445000000-E	1145	BARRICADES (TYPE III)	926 LF	20.00	18,520.00
0123	4455000000-N	1150	FLAGGER	135 DAY	160.00	21,600.00

Contract Item Sheets For C203207

Line #	ItemNumber	Sec #	Description	Quantity Unit	Unit Bid Price	Amount Bid
0124	4490000000-E	1170	PORTABLE CONCRETE BARRIER (ANCHORED)	1,640 LF	31.00	50,840.00
0125	4516000000-N	1180	SKINNY DRUM	101 EA	31.00	3,131.00
0126	4520000000-N	1266	TUBULAR MARKERS (FIXED)	152 EA	42.00	6,384.00
0127	4685000000-E	1205	THERMOPLASTIC PAVEMENT MARKING LINES (4", 90 MILS)	5,818 LF	0.70	4,072.60
0128	4686000000-E	1205	THERMOPLASTIC PAVEMENT MARKING LINES (4", 120 MILS)	18,829 LF	0.75	14,121.75
0129	4695000000-E	1205	THERMOPLASTIC PAVEMENT MARKING LINES (8", 90 MILS)	945 LF	1.60	1,512.00
0130	4697000000-E	1205	THERMOPLASTIC PAVEMENT MARKING LINES (8", 120 MILS)	265 LF	2.20	583.00
0131	4705000000-E	1205	THERMOPLASTIC PAVEMENT MARKING LINES (16", 120 MILS)	824 LF	3.30	2,719.20
0132	4710000000-E	1205	THERMOPLASTIC PAVEMENT MARKING LINES (24", 120 MILS)	1,095 LF	4.70	5,146.50
0133	4721000000-E	1205	THERMOPLASTIC PAVEMENT MARKING CHARACTER (120 MILS)	10 EA	166.00	1,660.00
0134	4725000000-E	1205	THERMOPLASTIC PAVEMENT MARKING SYMBOL (90 MILS)	54 EA	99.00	5,346.00
0135	4810000000-E	1205	PAINT PAVEMENT MARKING LINES (4")	29,386 LF	0.20	5,877.20
0136	4820000000-E	1205	PAINT PAVEMENT MARKING LINES (8")	378 LF	0.50	189.00
0137	4830000000-E	1205	PAINT PAVEMENT MARKING LINES (16")	448 LF	1.10	492.80
0138	4835000000-E	1205	PAINT PAVEMENT MARKING LINES (24")	785 LF	2.20	1,727.00
0139	4840000000-N	1205	PAINT PAVEMENT MARKING CHARAC-TER	20 EA	27.00	540.00
0140	4845000000-N	1205	PAINT PAVEMENT MARKING SYMBOL	26 EA	27.00	702.00

Contract Item Sheets For C203207

Line #	ItemNumber	Sec #	Description	Quantity Unit	Unit Bid Price	Amount Bid
0141	4850000000-E	1205	REMOVAL OF PAVEMENT MARKING LINES (4")	10,422 LF	1.00	10,422.00
0142	4870000000-E	1205	REMOVAL OF PAVEMENT MARKING LINES (24")	24 LF	5.50	132.00
0143	4875000000-N	1205	REMOVAL OF PAVEMENT MARKING SYMBOLS & CHARACTERS	4 EA	160.00	640.00
0144	4900000000-N	1251	PERMANENT RAISED PAVEMENT MARKERS	401 EA	4.40	1,764.40
0145	5319000000-E	1505	CLASS B CONCRETE FOR ENCASING UTILITY LINES	1.5 CY	150.00	225.00
0146	5325600000-E	1510	6" WATER LINE	4,314 LF	55.00	237,270.00
0147	5325800000-E	1510	8" WATER LINE	432 LF	70.00	30,240.00
0148	5326200000-E	1510	12" WATER LINE	742 LF	115.00	85,330.00
0149	5540000000-E	1515	6" VALVE	9 EA	820.00	7,380.00
0150	5558000000-E	1515	12" VALVE	2 EA	2,200.00	4,400.00
0151	5571400000-E	1515	4" TAPPING VALVE	1 EA	2,200.00	2,200.00
0152	5571600000-E	1515	6" TAPPING VALVE	4 EA	2,500.00	10,000.00
0153	5571800000-E	1515	8" TAPPING VALVE	1 EA	3,200.00	3,200.00
0154	5589200000-E	1515	2" AIR RELEASE VALVE	2 EA	2,400.00	4,800.00
0155	5606000000-E	1515	2" BLOW OFF	2 EA	2,000.00	4,000.00
0156	5648000000-N	1515	RELOCATE WATER METER	11 EA	600.00	6,600.00
0157	5649000000-N	1515	RECONNECT WATER METER	24 EA	800.00	19,200.00
0158	5666000000-E	1515	FIRE HYDRANT	1 EA	3,400.00	3,400.00
0159	5672000000-N	1515	RELOCATE FIRE HYDRANT	10 EA	1,150.00	11,500.00
0160	5691300000-E	1520	8" SANITARY GRAVITY SEWER	1,188 LF	40.00	47,520.00

Contract Item Sheets For C203207

Line #	ItemNumber	Sec #	Description	Quantity Unit	Unit Bid Price	Amount Bid
0161	5709100000-E	1520	2" FORCE MAIN SEWER	10 LF	25.00	250.00
0162	5709300000-E	1520	6" FORCE MAIN SEWER	460 LF	44.00	20,240.00
0163	5709400000-E	1520	8" FORCE MAIN SEWER	195 LF	54.00	10,530.00
0164	5768000000-N	1520	SANITARY SEWER CLEAN-OUT	4 EA	1,300.00	5,200.00
0165	5775000000-E	1525	4' DIA UTILITY MANHOLE	12 EA	2,320.00	27,840.00
0166	5781000000-E	1525	UTILITY MANHOLE WALL, 4' DIA	46 LF	150.00	6,900.00
0167	5800000000-E	1530	ABANDON 6" UTILITY PIPE	2,388 LF	4.05	9,671.40
0168	5801000000-E	1530	ABANDON 8" UTILITY PIPE	1,915 LF	5.20	9,958.00
0169	5804000000-E	1530	ABANDON 12" UTILITY PIPE	1,007 LF	8.15	8,207.05
0170	5811000000-E	1530	ABANDON 18" UTILITY PIPE	100 LF	27.00	2,700.00
0171	5815000000-N	1530	REMOVE WATER METER	5 EA	190.00	950.00
0172	5815500000-N	1530	REMOVE FIRE HYDRANT	2 EA	530.00	1,060.00
0173	5816000000-N	1530	ABANDON UTILITY MANHOLE	1 EA	1,500.00	1,500.00
0174	5828000000-N	1530	REMOVE UTILITY MANHOLE	4 EA	1,100.00	4,400.00
0175	5835700000-E	1540	16" ENCASEMENT PIPE	700 LF	95.00	66,500.00
0176	5835800000-E	1540	18" ENCASEMENT PIPE	535 LF	95.00	50,825.00
0177	5835900000-E	1540	20" ENCASEMENT PIPE	96 LF	125.00	12,000.00
0178	5836000000-E	1540	24" ENCASEMENT PIPE	510 LF	125.00	63,750.00
0179	5871900000-E	1550	TRENCHLESS INSTALLATION OF 16" IN SOIL	351 LF	175.00	61,425.00
0180	5871910000-E	1550	TRENCHLESS INSTALLATION OF 16" NOT IN SOIL	349 LF	425.00	148,325.00

Contract Item Sheets For C203207

Line #	ItemNumber	Sec #	Description	Quantity Unit	Unit Bid Price	Amount Bid
0181	5872000000-E	1550	TRENCHLESS INSTALLATION OF 18" IN SOIL	268 LF	195.00	52,260.00
0182	5872010000-E	1550	TRENCHLESS INSTALLATION OF 18" NOT IN SOIL	267 LF	625.00	166,875.00
0183	5872200000-E	1550	TRENCHLESS INSTALLATION OF 24" IN SOIL	175 LF	195.00	34,125.00
0184	5872210000-E	1550	TRENCHLESS INSTALLATION OF 24" NOT IN SOIL	175 LF	425.00	74,375.00
0185	6000000000-E	1605	TEMPORARY SILT FENCE	66,600 LF	2.00	133,200.00
0186	6006000000-E	1610	STONE FOR EROSION CONTROL, CLASS A	28,000 TON	40.00	1,120,000.00
0187	6009000000-E	1610	STONE FOR EROSION CONTROL, CLASS B	17,180 TON	45.00	773,100.00
0188	6012000000-E	1610	SEDIMENT CONTROL STONE	7,720 TON	33.00	254,760.00
0189	6015000000-E	1615	TEMPORARY MULCHING	214.5 ACR	525.00	112,612.50
0190	6018000000-E	1620	SEED FOR TEMPORARY SEEDING	5,050 LB	2.75	13,887.50
0191	6021000000-E	1620	FERTILIZER FOR TEMPORARY SEED-ING	22.5 TON	900.00	20,250.00
0192	6024000000-E	1622	TEMPORARY SLOPE DRAINS	3,215 LF	10.00	32,150.00
0193	6029000000-E	SP	SAFETY FENCE	600 LF	2.00	1,200.00
0194	6030000000-E	1630	SILT EXCAVATION	47,800 CY	2.50	119,500.00
0195	6036000000-E	1631	MATTING FOR EROSION CONTROL	255,420 SY	1.40	357,588.00
0196	6037000000-E	SP	COIR FIBER MAT	235 SY	5.80	1,363.00
0197	6038000000-E	SP	PERMANENT SOIL REINFORCEMENT MAT	2,200 SY	5.80	12,760.00
0198	6042000000-E	1632	1/4" HARDWARE CLOTH	4,640 LF	2.60	12,064.00
0199	6070000000-N	1639	SPECIAL STILLING BASINS	24 EA	775.00	18,600.00

Contract Item Sheets For C203207

Line #	ItemNumber	Sec #	Description	Quantity Unit	Unit Bid Price	Amount Bid
0200	6071010000-E	SP	WATTLE	140 LF	6.35	889.00
0201	6071012000-E	SP	COIR FIBER WATTLE	9,490 LF	7.35	69,751.50
0202	6071020000-E	SP	POLYACRYLAMIDE (PAM)	8,640 LB	8.70	75,168.00
0203	6071030000-E	1640	COIR FIBER BAFFLE	2,390 LF	5.10	12,189.00
0204	6071050000-E	SP	**" SKIMMER (1-1/2")	15 EA	880.00	13,200.00
0205	6071050000-E	SP	**" SKIMMER (2")	3 EA	1,000.00	3,000.00
0206	6071050000-E	SP	**" SKIMMER (2-1/2")	1 EA	1,000.00	1,000.00
0207	6084000000-E	1660	SEEDING & MULCHING	210 ACR	1,500.00	315,000.00
0208	6087000000-E	1660	MOWING	132 ACR	80.00	10,560.00
0209	6090000000-E	1661	SEED FOR REPAIR SEEDING	2,200 LB	3.70	8,140.00
0210	6093000000-E	1661	FERTILIZER FOR REPAIR SEEDING	6.25 TON	8.00	50.00
0211	6096000000-E	1662	SEED FOR SUPPLEMENTAL SEEDING	3,250 LB	3.00	9,750.00
0212	6108000000-E	1665	FERTILIZER TOPDRESSING	96.75 TON	895.00	86,591.25
0213	6114500000-N	1667	SPECIALIZED HAND MOWING	80 MHR	55.00	4,400.00
0214	6117000000-N	SP	RESPONSE FOR EROSION CONTROL	350 EA	116.00	40,600.00
0215	6132000000-N	SP	GENERIC EROSION CONTROL ITEM SUPPLEMENTAL RESPONSE FOR EROSION CONTROL	30 EA	400.00	12,000.00
0216	7060000000-E	1705	SIGNAL CABLE	4,060 LF	2.50	10,150.00
0217	7120000000-E	1705	VEHICLE SIGNAL HEAD (12", 3 SECTION)	38 EA	800.00	30,400.00
0218	7132000000-E	1705	VEHICLE SIGNAL HEAD (12", 4 SECTION)	7 EA	945.00	6,615.00

Contract Item Sheets For C203207

Line #	ItemNumber	Sec #	Description	Quantity Unit	Unit Bid Price	Amount Bid
0219	7144000000-E	1705	VEHICLE SIGNAL HEAD (12", 5 SECTION)	2 EA	1,140.00	2,280.00
0220	7252000000-E	1710	MESSENGER CABLE (1/4")	80 LF	2.80	224.00
0221	7264000000-E	1710	MESSENGER CABLE (3/8")	1,150 LF	3.30	3,795.00
0222	7288000000-E	1715	PAVED TRENCHING (**********) (1, 2")	120 LF	22.00	2,640.00
0223	7300000000-E	1715	UNPAVED TRENCHING (**********) (1, 2")	2,470 LF	5.50	13,585.00
0224	7301000000-E	1715	DIRECTIONAL DRILL (**********) (1, 2")	130 LF	16.60	2,158.00
0225	7301000000-E	1715	DIRECTIONAL DRILL (**********) (2, 2")	310 LF	19.00	5,890.00
0226	7324000000-N	1716	JUNCTION BOX (STANDARD SIZE)	41 EA	270.00	11,070.00
0227	7348000000-N	1716	JUNCTION BOX (OVER-SIZED, HEAVY DUTY)	8 EA	440.00	3,520.00
0228	7360000000-N	1720	WOOD POLE	10 EA	800.00	8,000.00
0229	7372000000-N	1721	GUY ASSEMBLY	22 EA	380.00	8,360.00
0230	7408000000-E	1722	1" RISER WITH WEATHERHEAD	3 EA	330.00	990.00
0231	7420000000-E	1722	2" RISER WITH WEATHERHEAD	15 EA	440.00	6,600.00
0232	7444000000-E	1725	INDUCTIVE LOOP SAWCUT	3,590 LF	7.00	25,130.00
0233	7456000000-E	1726	LEAD-IN CABLE (**********) (14-2)	7,135 LF	1.60	11,416.00
0234	7590000000-N	SP	METAL POLE WITH DUAL MAST ARM	2 EA	15,000.00	30,000.00
0235	7613000000-N	SP	SOIL TEST	2 EA	1,000.00	2,000.00
0236	7614100000-E	SP	DRILLED PIER FOUNDATION (14-2)	12 CY	700.00	8,400.00
0237	7631000000-N	SP	MAST ARM WITH METAL POLE DESIGN	2 EA	55.00	110.00

Contract Item Sheets For C203207

Line #	ItemNumber	Sec #	Description	Quantity Unit	Unit Bid Price	Amount Bid
0238	7636000000-N	1745	SIGN FOR SIGNALS	16 EA	270.00	4,320.00
0239	7675000000-N	1747	LED BLANKOUT SIGN	5 EA	3,500.00	17,500.00
0240	7684000000-N	1750	SIGNAL CABINET FOUNDATION	5 EA	995.00	4,975.00
0241	7756000000-N	1751	CONTROLLER WITH CABINET (TYPE 2070L, BASE MOUNTED)	5 EA	12,750.00	63,750.00
0242	7780000000-N	1751	DETECTOR CARD (TYPE 2070L)	23 EA	110.00	2,530.00
0243	7901000000-N	1753	CABINET BASE EXTENDER	5 EA	380.00	1,900.00
0244	7948000000-N	1757	TRAFFIC SIGNAL REMOVAL	1 EA	1,220.00	1,220.00
0245	7990000000-E	SP	GENERIC SIGNAL ITEM 2" RIGID METALLIC CONDUIT	175 LF	22.00	3,850.00
0272	0192000000-N	260	PROOF ROLLING	60 HR	126.00	7,560.00

Contract Item Sheets For C203207

Line #	ItemNumber	Sec #	Description	Quantity Unit	Unit Bid Price	Amount Bid
0246	8801000000-E	SP	MSE RETAINING WALL NO **** (A)	470 SF	258.00	121,260.00
0247	8839000000-E	SP	GENERIC RETAINING WALL ITEM CONC BARRIER WITH MOMENT SLAB	1,450 LF	33.00	47,850.00

Contract Item Sheets For C203207

Line #	ItemNumber	Sec #	Description	Quantity Unit	Unit Bid Price	Amount Bid
0248	8014000000-N	SP	TEMPORARY RAILROAD SHORING FOR BENT ***, STATION ********** (ABUT 1, 9404+63.64 -M1-)	Lump Sum LS	93,500.00	93,500.00
0249	8014000000-N	SP	TEMPORARY RAILROAD SHORING FOR BENT ***, STATION ********** (ABUT 2, 9404+63.64 -M1-)	Lump Sum LS	93,500.00	93,500.00
0250	8014000000-N	SP	TEMPORARY RAILROAD SHORING FOR BENT ***, STATION ********** (PIER 1, 9404+63.64 -M1-)	Lump Sum LS	165,000.00	165,000.00
0251	8014000000-N	SP	TEMPORARY RAILROAD SHORING FOR BENT ***, STATION ********** (PIER 2, 9404+63.64 -M1-)	Lump Sum LS	165,525.00	165,525.00
0252	8091000000-N	410	FOUNDATION EXCAVATION FOR BENT ** AT STATION ********** (PIER 1, 9404+23.91 -M1-)	Lump Sum LS	20,750.00	20,750.00
0253	8091000000-N	410	FOUNDATION EXCAVATION FOR BENT ** AT STATION ********** (PIER 2, 9404+88.19 -M1-)	Lump Sum LS	20,750.00	20,750.00
0254	8112730000-N	450	PDA TESTING	4 EA	3,500.00	14,000.00
0255	8147000000-E	420	REINFORCED CONCRETE DECK SLAB	4,656 SF	39.00	181,584.00
0256	8175000000-E	420	CLASS AA CONCRETE (BRIDGE)	398.7 CY	440.00	175,428.00
0257	8217000000-E	425	REINFORCING STEEL (BRIDGE)	64,286 LB	0.75	48,214.50
0258	8238000000-E	425	SPIRAL COLUMN REINFORCING STEEL (BRIDGE)	4,295 LB	1.15	4,939.25
0259	8280000000-E	440	APPROX ..... LBS STRUCTURAL STEEL	369,169 LS	710,000.00	710,000.00
0260	8294000000-N	442	PAINTING OF STRUCTURAL STEEL	Lump Sum LS	114,000.00	114,000.00
0261	8364000000-E	450	HP12X53 STEEL PILES	9,060 LF	43.00	389,580.00
0262	8453000000-E	454	METHOD B DAMPPROOFING	422 SY	45.00	18,990.00
0263	8517000000-E	460	1'-***"X *****" CONCRETE PARA-PET (1'-0" X 2'-1")	254.8 LF	141.00	35,926.80
0264	8531000000-E	462	4" SLOPE PROTECTION	355 SY	75.00	26,625.00

Contract Item Sheets For C203207

Line #	ItemNumber	Sec #	Description	Quantity Unit	Unit Bid Price	Amount Bid
0265	8741000000-N	SP	STRUCTURE DRAINAGE SYSTEM AT STA********** (9404+63.64 -M1-)	Lump Sum LS	82,500.00	82,500.00
0266	8860000000-N	SP	GENERIC STRUCTURE ITEM 4" DIAMETER SIGNAL CONDUIT SYSTEM AT STA 9404+63.64 -M1-	Lump Sum LS	9,500.00	9,500.00
0267	8860000000-N	SP	GENERIC STRUCTURE ITEM SELF-LUBRICATING EXPANSION BEARING ASSEMBLIES	Lump Sum LS	132,100.00	132,100.00
0268	8867000000-E	SP	GENERIC STRUCTURE ITEM METAL FENCE & HANDRAIL	327.5 LF	365.00	119,537.50
0269	8893000000-E	SP	GENERIC STRUCTURE ITEM 1" ASPHALT PLANKING PROTECTIVE COURSE FOR DECK	468 SY	30.00	14,040.00
0270	8893000000-E	SP	GENERIC STRUCTURE ITEM MEMBRANE LAYER WATERPROOFING FOR DECK	513 SY	65.00	33,345.00
0271	8893000000-E	SP	GENERIC STRUCTURE ITEM TWO-PART MEMBRANE WATERPROOF-ING SYSTEM	50 SY	105.00	5,250.00

TOTAL AMOUNT OF BID FOR ENTIRE PROJECT **$19,893,955.20**

Contract No. C203207

County Rowan

Rev. 5-19-11

EXECUTION OF CONTRACT
NON-COLLUSION AFFIDAVIT, DEBARMENT CERTIFICATION AND GIFT BAN CERTIFICATION

CORPORATION

The Contractor being duly sworn, solemnly swears (or affirms) that neither he, nor any official, agent or employee has entered into any agreement, participated in any collusion, or otherwise taken any action which is in restraint of free competitive bidding in connection with this Contract, that the Contractor has not been convicted of violating *N.C.G.S. § 133-24* within the last three years, and that the Contractor intends to do the work with its own bonafide employees or subcontractors and did not bid for the benefit of another contractor.

By submitting this Execution of Contract, Non-Collusion Affidavit and Debarment Certification, the Contractor is certifying his status under penalty of perjury under the laws of the United States in accordance with the Debarment Certification attached, provided that the Debarment Certification also includes any required statements concerning exceptions that are applicable.

N.C.G.S. § 133-32 and Executive Order 24 prohibit the offer to, or acceptance by, any State Employee of any gift from anyone with a contract with the State, or from any person seeking to do business with the State. By execution of any response in this procurement, you attest, for your entire organization and its employees or agents, that you are not aware that any such gift has been offered, accepted, or promised by any employees of your organization.

SIGNATURE OF CONTRACTOR

Blythe Development Company

Full name of Corporation

1415 E. Westinghouse Blvd., Charlotte, NC 28273

Address as Prequalified

Attest _____ ~~Secretary~~/Assistant Secretary
Select appropriate title

By _____ President/~~Vice President/Assistant Vice President~~
Select appropriate title

Luther J. Blythe Jr.

Print or type Signer's name

L. Jack Blythe

Print or type Signer's name

CORPORATE SEAL

AFFIDAVIT MUST BE NOTARIZED

Subscribed and sworn to before me this the

31 day of October 2013

Megan Barrett

Signature of Notary Public

of Mecklenburg County

State of NC

My Commission Expires: 2.4.2018

NOTARY SEAL

MEGAN BARRETT
NOTARY PUBLIC
MECKLENBURG COUNTY, NC

Contract No. C203207
County Rowan

Rev. 5-19-11

DEBARMENT CERTIFICATION

Conditions for certification:

1. The prequalified bidder shall provide immediate written notice to the Department if at any time the bidder learns that his certification was erroneous when he submitted his debarment certification or explanation filed with the Department, or has become erroneous because of changed circumstances.

2. The terms *covered transaction, debarred, suspended, ineligible, lower tier covered transaction, participant, person, primary covered transaction, principal, proposal,* and *voluntarily excluded,* as used in this provision, have the meanings set out in the Definitions and Coverage sections of the rules implementing Executive Order 12549. A copy of the Federal Rules requiring this certification and detailing the definitions and coverages may be obtained from the Contract Officer of the Department.

3. The prequalified bidder agrees by submitting this form, that he will not knowingly enter into any lower tier covered transaction with a person who is debarred, suspended, declared ineligible, or voluntarily excluded from participation in NCDOT contracts, unless authorized by the Department.

4. For Federal Aid projects, the prequalified bidder further agrees that by submitting this form he will include the Federal-Aid Provision titled *Required Contract Provisions Federal-Aid Construction Contract (Form FHWA PR* 1273) provided by the Department, without subsequent modification, in all lower tier covered transactions.

5. The prequalified bidder may rely upon a certification of a participant in a lower tier covered transaction that he is not debarred, suspended, ineligible, or voluntarily excluded from the covered transaction, unless he knows that the certification is erroneous. The bidder may decide the method and frequency by which he will determine the eligibility of his subcontractors.

6. Nothing contained in the foregoing shall be construed to require establishment of a system of records in order to render in good faith the certification required by this provision. The knowledge and information of a participant is not required to exceed that which is normally possessed by a prudent person in the ordinary course of business dealings.

7. Except as authorized in paragraph 6 herein, the Department may terminate any contract if the bidder knowingly enters into a lower tier covered transaction with a person who is suspended, debarred, ineligible, or voluntarily excluded from participation in this transaction, in addition to other remedies available by the Federal Government.

Contract No. C203207

County Rowan

Rev. 5-19-11

DEBARMENT CERTIFICATION

The prequalified bidder certifies to the best of his knowledge and belief, that he and his principals:

a. Are not presently debarred, suspended, proposed for debarment, declared ineligible, or voluntarily excluded from covered transactions by any Federal department or agency;

b. Have not within a three-year period preceding this proposal been convicted of or had a civil judgment rendered against them for commission of fraud or a criminal offense in connection with obtaining, attempting to obtain, or performing a public (Federal, State or local) transaction or contract under a public transaction; violation of Federal or State antitrust statutes or commission of embezzlement, theft, forgery, bribery, falsification or destruction of records; making false statements; or receiving stolen property;

c. Are not presently indicted for or otherwise criminally or civilly charged by a governmental entity (Federal, State or local) with commission of any of the offenses enumerated in paragraph b. of this certification; and

d. Have not within a three-year period preceding this proposal had one or more public transactions (Federal, State or local) terminated for cause or default.

e. Will submit a revised Debarment Certification immediately if his status changes and will show in his bid proposal an explanation for the change in status.

If the prequalified bidder cannot certify that he is not debarred, he shall provide an explanation with this submittal. An explanation will not necessarily result in denial of participation in a contract.

Failure to submit a non-collusion affidavit and debarment certification will result in the prequalified bidder's bid being considered non-responsive.

☐ Check here if an explanation is attached to this certification.

1-17-12
Z-140

Contract No. **C203207**

County (ies): **Rowan**

ACCEPTED BY THE
DEPARTMENT OF TRANSPORTATION

Contract Officer

11/8/13
Date

Execution of Contract and Bonds
Approved as to Form:

Thomas H Moore
Asst Attorney General

Signature Sheet (Bid - Acceptance by Department)

Bond No. 018030826

Contract No. C203207
County Rowan

Rev 5-17-11

CONTRACT PAYMENT BOND

Date of Payment Bond Execution	October 31, 2013
Name of Principal Contractor	Blythe Development Company
Name of Surety:	Liberty Mutual Insurance Company
Name of Contracting Body:	**North Carolina Department of Transportation**
	Raleigh, North Carolina
Amount of Bond:	($19,893,955.20) Nineteen Million Eight Hundred Ninety Three Thousand Nine Hundred Fifty Five Dollars and 20/100
Contract ID No.:	C203207
County Name:	Rowan

KNOW ALL MEN BY THESE PRESENTS, That we, the PRINCIPAL CONTRACTOR (hereafter, PRINCIPAL) and SURETY above named, are held and firmly bound unto the above named Contracting Body, hereinafter called the Contracting Body, in the penal sum of the amount stated above for the payment of which sum well and truly to be made, we bind ourselves, our heirs, executors, administrators, and successors, jointly and severally, firmly by these presents.

THE CONDITION OF THIS OBLIGATION IS SUCH, that whereas the principal entered into a certain contract with the Contracting Body, numbered as shown above and hereto attached:

NOW THEREFORE, if the principal shall promptly make payment to all persons supplying labor and material in the prosecution of the work provided for in said contract, and any and all duly authorized modifications of said contract that may hereafter be made, notice of which modifications to the surety being hereby waived, then this obligation to be void; otherwise to remain in full force and virtue.

IN WITNESS WHEREOF, the above-bound parties have executed this instrument under their several seals on the date indicated above, the name and corporate seal of each corporate party being hereto affixed and these presents duly signed by its undersigned representative, pursuant to authority of its governing body.

Contract No. C203207

County Rowan

Rev 5-17-11

CONTRACT PAYMENT BOND

Affix Seal of Surety Company

Liberty Mutual Insurance Company
Print or type Surety Company Name

By G. Timothy Wilkerson
Print, stamp or type name of Attorney-in-Fact

LIBERTY MUTUAL INSURANCE COMPANY INCORPORATED 1912 MASSACHUSETTS

Signature of Attorney-in-Fact

Signature of Witness

Angela D. Ramsey
Print or type Signer's name

6100 Fairview Road

Charlotte, NC 28210
Address of Attorney-in-Fact

Contract No. C203207

County Rowan

Rev 5-17-11

CONTRACT PAYMENT BOND

CORPORATION

SIGNATURE OF CONTRACTOR (Principal)

Blythe Development Company

Full name of Corporation

1415 East Westinghouse Boulevard, Charlotte, NC 28273

Address as prequalified

By _____

Signature of President, ~~Vice President, Assistant Vice President~~

Select appropriate title

L. J. BLYTHE

Print or type Signer's name

Affix Corporate Seal

Attest _____

Signature of Secretary, ~~Assistant Secretary~~

Select appropriate title

F. W. BLYTHE

Print or type Signer's name

This Power of Attorney limits the acts of those named herein, and they have no authority to bind the Company except in the manner and to the extent herein stated. Not valid for mortgage, note, loan, letter of credit, bank deposit, currency rate, interest rate or residual value guarantees. To confirm the validity of this Power of Attorney call 610-832-8240 between 9:00 am and 4:30 pm EST on any business day.

American Fire and Casualty Company
The Ohio Casualty Insurance Company
Liberty Mutual Insurance Company
West American Insurance Company

POWER OF ATTORNEY

KNOWN ALL PERSONS BY THESE PRESENTS: That American Fire & Casualty Company and The Ohio Casualty Insurance Company are corporations duly organized under the laws of the State of New Hampshire, that Liberty Mutual Insurance Company is a corporation duly organized under the laws of the State of Massachusetts, and West American Insurance Company is a corporation duly organized under the laws of the State of Indiana (herein collectively called the "Companies"), pursuant to and by authority herein set forth, does hereby name, constitute and appoint, G. Timothy Wilkerson of the city of Charlotte, state of NC its true and lawful attorney-in-fact, with full power and authority hereby conferred to sign, execute and acknowledge the following surety bond:

Principal Name: Blythe Development Company

Obligee Name: North Carolina Department of Transportation

Surety Bond Number: 018030826 **Bond Amount:** See Bond Form

IN WITNESS WHEREOF, this Power of Attorney has been subscribed by an authorized officer or official of the Companies and the corporate seals of the Companies have been affixed thereto this 1st day of December, 2012.

American Fire and Casualty Company
The Ohio Casualty Insurance Company
Liberty Mutual Insurance Company
West American Insurance Company

By: _____
Gregory W. Davenport, Assistant Secretary

STATE OF WASHINGTON ss
COUNTY OF KING

On this 1st day of December, 2012, before me personally appeared Gregory W. Davenport, who acknowledged himself to be the Assistant Secretary of American Fire and Casualty Company, Liberty Mutual Insurance Company, The Ohio Casualty Company, and West American Insurance Company, and that he, as such, being authorized so to do, execute the foregoing instrument for the purposes therein contained by signing on behalf of the corporations by himself as a duly authorized officer.

IN WITNESS WHEREOF, I have hereunto subscribed my name and affixed my notarial seal at Seattle, Washington, on the day and year first above written.

By: _____
KD Riley, Notary Public, Notary Public

This Power of Attorney is made and executed pursuant to and by authority of the following By-laws and Authorizations of American Fire and Casualty Company, The Ohio Casualty Insurance Company, Liberty Mutual Insurance Company, and West American Insurance Company which resolutions are now in full force and effect reading as follows:

ARTICLE IV – OFFICERS – Section 12. Power of Attorney. Any officer or other official of the Corporation authorized for that purpose in writing by the Chairman or the President, and subject to such limitation as the Chairman or the President may prescribe, shall appoint such attorneys-in-fact, as may be necessary to act in behalf of the Corporation to make, execute, seal, acknowledge and deliver as surety any and all undertakings, bonds, recognizances and other surety obligations. Such attorneys-in-fact, subject to the limitations set forth in their respective powers of attorney, shall have full power to bind the Corporation by their signature and execution of any such instruments and to attach thereto the seal of the Corporation. When so executed, such instruments shall be as binding as if signed by the President and attested to by the Secretary. Any power or authority granted to any representative or attorney-in-fact under the provisions of this article may be revoked at any time by the Board, the Chairman, the President or by the officer or officers granting such power or authority.

ARTICLE XIII – Execution of Contracts – SECTION 5. Surety Bonds and Undertakings. Any officer of the Company authorized for that purpose in writing by the chairman or the president, and subject to such limitations as the chairman or the president may prescribe, shall appoint such attorneys-in-fact, as may be necessary to act in behalf of the Company to make, execute, seal, acknowledge and deliver as surety any and all undertakings, bonds, recognizances and other surety obligations. Such attorneys-in-fact subject to the limitations set forth in their respective powers of attorney, shall have full power to bind the Company by their signature and execution of any such instruments and to attach thereto the seal of the Company. When so executed such instruments shall be as binding as if signed by the president and attested by the secretary.

Certificate of Designation – The President of the Company, acting pursuant to the Bylaws of the Company, authorizes Gregory W. Davenport, Assistant Secretary to appoint such attorneys-in-fact as may be necessary to act on behalf of the Company to make, execute, seal, acknowledge and deliver as surety any and all undertakings, bonds, recognizances and other surety obligations.

Authorization – By unanimous consent of the Company's Board of Directors, the Company consents that facsimile or mechanically reproduced signature of any assistant secretary of the Company, wherever appearing upon a certified copy of any power of attorney issued by the Company in connection with surety bonds, shall be valid and binding upon the Company with the same force and effect as though manually affixed.

I, David M. Carey, the undersigned, Assistant Secretary, of American Fire and Casualty Company, The Ohio Casualty Insurance Company, Liberty Mutual Insurance Company, and West American Insurance Company do hereby certify that the original power of attorney of which the foregoing is a full, true and correct copy of the Power of Attorney executed by said Companies, is in full force and effect and has not been revoked.

IN TESTIMONY WHEREOF, I have hereunto set my hand and affixed the seals of said Companies this 31st day of October, 2013.

By: _____

Bond No. 018030826

Contract No. C203207

County Rowan

Rev 5-17-11

CONTRACT PERFORMANCE BOND

Date of Performance Bond Execution: October 31, 2013

Name of Principal Contractor: Blythe Development Company

Name of Surety: Liberty Mutual Insurance Company

Name of Contracting Body: **North Carolina Department of Transportation**

Raleigh, North Carolina

Amount of Bond: ($19,893,955.20) Nineteen Million Eight Hundred Ninety Three Thousand Nine Hundred Fifty Five Dollars and 20/100

Contract ID No.: C203207

County Name: Rowan

KNOW ALL MEN BY THESE PRESENTS, That we, the PRINCIPAL CONTRACTOR (hereafter, PRINCIPAL) and SURETY above named, are held and firmly bound unto the above named Contracting Body, hereinafter called the Contracting Body, in the penal sum of the amount stated above for the payment of which sum well and truly to be made, we bind ourselves, our heirs, executors, administrators, and successors, jointly and severally, firmly by these presents.

THE CONDITION OF THIS OBLIGATION IS SUCH, that whereas the principal entered into a certain contract with the Contracting Body, numbered as shown above and hereto attached:

NOW THEREFORE, if the principal shall well and truly perform and fulfill all the undertakings, covenants, terms, conditions, and agreements of said contract during the original term of said contract and any extensions thereof that may be granted by the Contracting Body, with or without notice to the Surety, and during the life of any guaranty required under the contract, and shall also well and truly perform and fulfill all the undertakings, covenants, terms, conditions, and agreements of any and all duly authorized modifications of said contract that may hereafter be made, notice of which modifications to the surety being hereby waived, then this obligation to be void; otherwise to remain in full force and virtue.

IN WITNESS WHEREOF, the above-bound parties have executed this instrument under their several seals on the date indicated above, the name and corporate seal of each corporate party being hereto affixed and these presents duly signed by its undersigned representative, pursuant to authority of its governing body.

Contract No. C203207
County Rowan

Rev 5-17-11

CONTRACT PERFORMANCE BOND

Affix Seal of Surety Company

Liberty Mutual Insurance Company
Print or type Surety Company Name

By G. Timothy Wilkerson
Print, stamp or type name of Attorney-in-Fact

LIBERTY MUTUAL INSURANCE COMPANY INCORPORATED 1912 MASSACHUSETTS

Signature of Attorney-in-Fact

Signature of Witness

Angela D. Ramsey
Print or type Signer's name

6100 Fairview Road
Charlotte, NC 28210
Address of Attorney-in-Fact

Contract No. C203207
County Rowan

Rev 5-17-11

CONTRACT PERFORMANCE BOND

CORPORATION

SIGNATURE OF CONTRACTOR (Principal)

Blythe Development Company
Full name of Corporation

1415 East Westinghouse Boulevard, Charlotte, NC 28273
Address as prequalified

By _____
Signature of President, ~~Vice President, Assistant Vice President~~
Select appropriate title

L. J. BLYTHE
Print or type Signer's name

Affix Corporate Seal

Attest _____
Signature of Secretary, ~~Assistant Secretary~~
Select appropriate title

F. W. BLYTHE
Print or type Signer's name

This Power of Attorney limits the acts of those named herein, and they have no authority to bind the Company except in the manner and to the extent herein stated. Not valid for mortgage, note, loan, letter of credit, bank deposit, currency rate, interest rate or residual value guarantees. To confirm the validity of this Power of Attorney call 610-832-8240 between 9:00 am and 4:30 pm EST on any business day.

American Fire and Casualty Company
The Ohio Casualty Insurance Company
Liberty Mutual Insurance Company
West American Insurance Company

POWER OF ATTORNEY

KNOWN ALL PERSONS BY THESE PRESENTS: That American Fire & Casualty Company and The Ohio Casualty Insurance Company are corporations duly organized under the laws of the State of New Hampshire, that Liberty Mutual Insurance Company is a corporation duly organized under the laws of the State of Massachusetts, and West American Insurance Company is a corporation duly organized under the laws of the State of Indiana (herein collectively called the "Companies"), pursuant to and by authority herein set forth, does hereby name, constitute and appoint, G. Timothy Wilkerson of the city of Charlotte, state of NC its true and lawful attorney-in-fact, with full power and authority hereby conferred to sign, execute and acknowledge the following surety bond:

Principal Name: Blythe Development Company

Obligee Name: North Carolina Department of Transportation

Surety Bond Number: 018030826 **Bond Amount:** See Bond Form

IN WITNESS WHEREOF, this Power of Attorney has been subscribed by an authorized officer or official of the Companies and the corporate seals of the Companies have been affixed thereto this 1st day of December, 2012.

American Fire and Casualty Company
The Ohio Casualty Insurance Company
Liberty Mutual Insurance Company
West American Insurance Company

By: _____
Gregory W. Davenport, Assistant Secretary

STATE OF WASHINGTON ss
COUNTY OF KING

On this 1st day of December, 2012, before me personally appeared Gregory W. Davenport, who acknowledged himself to be the Assistant Secretary of American Fire and Casualty Company, Liberty Mutual Insurance Company, The Ohio Casualty Company, and West American Insurance Company, and that he, as such, being authorized so to do, execute the foregoing instrument for the purposes therein contained by signing on behalf of the corporations by himself as a duly authorized officer.

IN WITNESS WHEREOF, I have hereunto subscribed my name and affixed my notarial seal at Seattle, Washington, on the day and year first above written.

By: KD Riley
KD Riley, Notary Public, Notary Public

This Power of Attorney is made and executed pursuant to and by authority of the following By-laws and Authorizations of American Fire and Casualty Company, The Ohio Casualty Insurance Company, Liberty Mutual Insurance Company, and West American Insurance Company which resolutions are now in full force and effect reading as follows:

ARTICLE IV – OFFICERS – Section 12. Power of Attorney. Any officer or other official of the Corporation authorized for that purpose in writing by the Chairman or the President, and subject to such limitation as the Chairman or the President may prescribe, shall appoint such attorneys-in-fact, as may be necessary to act in behalf of the Corporation to make, execute, seal, acknowledge and deliver as surety any and all undertakings, bonds, recognizances and other surety obligations. Such attorneys-in-fact, subject to the limitations set forth in their respective powers of attorney, shall have full power to bind the Corporation by their signature and execution of any such instruments and to attach thereto the seal of the Corporation. When so executed, such instruments shall be as binding as if signed by the President and attested to by the Secretary. Any power or authority granted to any representative or attorney-in-fact under the provisions of this article may be revoked at any time by the Board, the Chairman, the President or by the officer or officers granting such power or authority.

ARTICLE XIII – Execution of Contracts – SECTION 5. Surety Bonds and Undertakings. Any officer of the Company authorized for that purpose in writing by the chairman or the president, and subject to such limitations as the chairman or the president may prescribe, shall appoint such attorneys-in-fact, as may be necessary to act in behalf of the Company to make, execute, seal, acknowledge and deliver as surety any and all undertakings, bonds, recognizances and other surety obligations. Such attorneys-in-fact subject to the limitations set forth in their respective powers of attorney, shall have full power to bind the Company by their signature and execution of any such instruments and to attach thereto the seal of the Company. When so executed such instruments shall be as binding as if signed by the president and attested by the secretary.

Certificate of Designation – The President of the Company, acting pursuant to the Bylaws of the Company, authorizes Gregory W. Davenport, Assistant Secretary to appoint such attorneys-in-fact as may be necessary to act on behalf of the Company to make, execute, seal, acknowledge and deliver as surety any and all undertakings, bonds, recognizances and other surety obligations.

Authorization – By unanimous consent of the Company's Board of Directors, the Company consents that facsimile or mechanically reproduced signature of any assistant secretary of the Company, wherever appearing upon a certified copy of any power of attorney issued by the Company in connection with surety bonds, shall be valid and binding upon the Company with the same force and effect as though manually affixed.

I, David M. Carey, the undersigned, Assistant Secretary, of American Fire and Casualty Company, The Ohio Casualty Insurance Company, Liberty Mutual Insurance Company, and West American Insurance Company do hereby certify that the original power of attorney of which the foregoing is a full, true and correct copy of the Power of Attorney executed by said Companies, is in full force and effect and has not been revoked.

IN TESTIMONY WHEREOF, I have hereunto set my hand and affixed the seals of said Companies this 31st day of October, 2013.

By: _____