STATE OF NORTH CAROLINA
DEPARTMENT OF TRANSPORTATION
RALEIGH, N.C.

C203253

CONTRACT AND
CONTRACT BONDS

FOR CONTRACT NO. C203253

WBS 51023.3.F1 CMS-0914(34)

T.I.P NO. C-5553

COUNTY OF ROWAN
THIS IS THE SIGNAL CONTRACT
ROUTE NUMBER LENGTH 0.000 MILES
LOCATION SALISBURY.

CONTRACTOR TRAFFIC CONTROL DEVICES, INC.
ADDRESS P.O. BOX 150418
ALTAMONTE SPRINGS,, FL 327150418

BIDS OPENED OCTOBER 15, 2013
CONTRACT EXECUTION NOV 18 2013

STATE OF NORTH CAROLINA
DEPARTMENT OF TRANSPORTATION
RALEIGH, N.C.

PROPOSAL

DATE AND TIME OF BID OPENING: **OCTOBER 15, 2013 AT 2:00 PM**

CONTRACT ID C203253
WBS 51023.3.1

FEDERAL-AID NO. CMS-0914(34)
COUNTY ROWAN
T.I.P. NO. C-5553
MILES 0.000
ROUTE NO.
LOCATION SALISBURY.

TYPE OF WORK COMPUTERIZED SIGNAL SYSTEM.

NOTICE:

ALL BIDDERS SHALL COMPLY WITH ALL APPLICABLE LAWS REGULATING THE PRACTICE OF GENERAL CONTRACTING AS CONTAINED IN CHAPTER 87 OF THE GENERAL STATUTES OF NORTH CAROLINA WHICH REQUIRES THE BIDDER TO BE LICENSED BY THE N.C. LICENSING BOARD FOR CONTRACTORS WHEN BIDDING ON ANY NON-FEDERAL AID PROJECT WHERE THE BID IS $30,000 OR MORE, EXCEPT FOR CERTAIN SPECIALTY WORK AS DETERMINED BY THE LICENSING BOARD. BIDDERS SHALL ALSO COMPLY WITH ALL OTHER APPLICABLE LAWS REGULATING THE PRACTICES OF ELECTRICAL, PLUMBING, HEATING AND AIR CONDITIONING AND REFRIGERATION CONTRACTING AS CONTAINED IN CHAPTER 87 OF THE GENERAL STATUTES OF NORTH CAROLINA. NOT WITHSTANDING THESE LIMITATIONS ON BIDDING, THE BIDDER WHO IS AWARDED ANY PROJECT SHALL COMPLY WITH CHAPTER 87 OF THE GENERAL STATUTES OF NORTH CAROLINA FOR LICENSING REQUIREMENTS WITHIN 60 CALENDAR DAYS OF BID OPENING, REGARDLESS OF FUNDING SOURCES.

BIDS WILL BE RECEIVED AS SHOWN BELOW:

THIS IS A SIGNAL PROPOSAL

5% BID BOND OR BID DEPOSIT REQUIRED

_____

PROPOSAL FOR THE CONSTRUCTION OF

CONTRACT No. C203253 IN ROWAN COUNTY, NORTH CAROLINA

Date_____ 20_____

DEPARTMENT OF TRANSPORTATION,

RALEIGH, NORTH CAROLINA

The Bidder has carefully examined the location of the proposed work to be known as Contract No. **C203253**; has carefully examined the plans and specifications, which are acknowledged to be part of the proposal, the special provisions, the proposal, the form of contract, and the forms of contract payment bond and contract performance bond; and thoroughly understands the stipulations, requirements and provisions. The undersigned bidder agrees to bound upon his execution of the bid and subsequent award to him by the Board of Transportation in accordance with this proposal to provide the necessary contract payment bond and contract performance bond within fourteen days after the written notice of award is received by him. The undersigned Bidder further agrees to provide all necessary machinery, tools, labor, and other means of construction; and to do all the work and to furnish all materials, except as otherwise noted, necessary to perform and complete the said contract in accordance with the *2012 Standard Specifications for Roads and Structures* by the dates(s) specified in the Project Special Provisions and in accordance with the requirements of the Engineer, and at the unit or lump sum prices, as the case may be, for the various items given on the sheets contained herein.

The Bidder shall provide and furnish all the materials, machinery, implements, appliances and tools, and perform the work and required labor to construct and complete State Highway Contract No. **C203253** in **Rowan County**, for the unit or lump sum prices, as the case may be, bid by the Bidder in his bid and according to the proposal, plans, and specifications prepared by said Department, which proposal, plans, and specifications show the details covering this project, and hereby become a part of this contract.

The published volume entitled *North Carolina Department of Transportation, Raleigh, Standard Specifications for Roads and Structures, January 2012* with all amendments and supplements thereto, is by reference incorporated into and made a part of this contract; that, except as herein modified, all the construction and work included in this contract is to be done in accordance with the specifications contained in said volume, and amendments and supplements thereto, under the direction of the Engineer.

If the proposal is accepted and the award is made, the contract is valid only when signed either by the Contract Officer or such other person as may be designated by the Secretary to sign for the Department of Transportation. The conditions and provisions herein cannot be changed except over the signature of the said Contract Officer.

The quantities shown in the itemized proposal for the project are considered to be approximate only and are given as the basis for comparison of bids. The Department of Transportation may increase or decrease the quantity of any item or portion of the work as may be deemed necessary or expedient.

An increase or decrease in the quantity of an item will not be regarded as sufficient ground for an increase or decrease in the unit prices, nor in the time allowed for the completion of the work, except as provided for the contract.

Accompanying this bid is a bid bond secured by a corporate surety, or certified check payable to the order of the Department of Transportation, for five percent of the total bid price, which deposit is to be forfeited as liquidated damages in case this bid is accepted and the Bidder shall fail to provide the required payment and performance bonds with the Department of Transportation, under the condition of this proposal, within 14 calendar days after the written notice of award is received by him, as provided in the *Standard Specifications*; otherwise said deposit will be returned to the Bidder.

NORTH CAROLINA PROFESSIONAL SEAL 21076 ENGINEER RANDY A. GARRIS

9/3/13

State Contract Officer

TABLE OF CONTENTS

COVER SHEET
PROPOSAL SHEET

PROJECT SPECIAL PROVISIONS

CONTRACT TIME AND LIQUIDATED DAMAGES: 1
INTERMEDIATE CONTRACT TIME NUMBER 1 AND LIQUIDATED DAMAGES: 1
INTERMEDIATE CONTRACT TIME NUMBER 2 AND LIQUIDATED DAMAGES: 2
INTERMEDIATE CONTRACT TIME NUMBER 3 AND LIQUIDATED DAMAGES: 3
MAJOR CONTRACT ITEMS: 4
NO SPECIALTY ITEMS: 4
SCHEDULE OF ESTIMATED COMPLETION PROGRESS: 4
DISADVANTAGED BUSINESS ENTERPRISE: 4
CERTIFICATION FOR FEDERAL-AID CONTRACTS: 17
CONTRACTOR'S LICENSE REQUIREMENTS: 17
U.S. DEPARTMENT OF TRANSPORTATION HOTLINE: 18
SUBSURFACE INFORMATION: 18
LOCATING EXISTING UNDERGROUND UTILITIES: 18
RESOURCE CONSERVATION: 18
DOMESTIC STEEL: 19
GIFTS FROM VENDORS AND CONTRACTORS: 19
EMPLOYMENT: 19
STATE HIGHWAY ADMINISTRATOR TITLE CHANGE: 20
ROADWAY 21
TRAFFIC CONTROL 27
SIGNALS AND INTELLIGENT TRANSPORTATION SYSTEMS 28

STANDARD SPECIAL PROVISIONS

AVAILABILITY OF FUNDS – TERMINATION OF CONTRACTS 1
ERRATA 2
PLANT AND PEST QUARANTINES 4
AWARD OF CONTRACT 5
MINORITY AND FEMALE EMPLOYMENT REQUIREMENTS 6
REQUIRED CONTRACT PROVISIONS FEDERAL - AID CONSTRUCTION CONTRACTS 9
ON-THE-JOB TRAINING 18
MINIMUM WAGES 21

PROPOSAL ITEM SHEET AND SIGNATURE SHEET

ITEM SHEET(S) (TAN SHEETS)
SIGNATURE SHEET (BID ACCEPTANCE BY DEPARTMENT)

PROJECT SPECIAL PROVISIONS

GENERAL

CONTRACT TIME AND LIQUIDATED DAMAGES:

(7-1-95) (Rev. 12-18-07) 108 SP1 G10 B

The date of availability for this contract is **November 25, 2013**

The completion date for this contract is **April 1, 2015**

The liquidated damages for this contract are **One Thousand Dollars ($1,000.00)** per calendar day.

INTERMEDIATE CONTRACT TIME NUMBER 1 AND LIQUIDATED DAMAGES:

(2-20-07 (5-29-13) 108 SP1 G14 A

The Contractor shall complete the required work of installing, maintaining, and removing the traffic control devices for lane closures and restoring traffic to the existing traffic pattern. The Contractor shall not close or narrow a lane of traffic on **US 52, US 29/US 70/ NC 150, US 601** during the following time restrictions:

DAY AND TIME RESTRICTIONS

Monday through Friday from 6:00 AM to 8:00 PM,
Saturday from 8:00 AM to 8:00 PM,
Sunday from 10:00 AM to 8:00 PM

In addition, the Contractor shall not close or narrow a lane of traffic on **US 52, US 29/US 70/ NC 150, US 601**, detain and/or alter the traffic flow on or during holidays, holiday weekends, special events, or any other time when traffic is unusually heavy, including the following schedules:

HOLIDAY AND HOLIDAY WEEKEND LANE CLOSURE RESTRICTIONS

1. For **unexpected occurrence** that creates unusually high traffic volumes, as directed by the Engineer.

2. For **New Year's Day**, between the hours of **6:00 AM** December 31st and **8:00 PM** January 2nd. If New Year's Day is on a Friday, Saturday, Sunday or Monday, then until **8:00 PM** the following Tuesday.

3. For **Easter**, between the hours of **6:00 AM** Thursday and **8:00 PM** Monday.

4. For **Memorial Day**, between the hours of **6:00 AM** Friday and **8:00 PM** Tuesday.

5. For **Independence Day**, between the hours of **6:00 AM** the day before Independence Day and **8:00 PM** the day after Independence Day.

   If **Independence Day** is on a Friday, Saturday, Sunday or Monday, then between the hours of **6:00 AM** the Thursday before Independence Day and **8:00 PM** the Tuesday after Independence Day.

6. For **Labor Day**, between the hours of **6:00 AM** Friday and **8:00 PM** Tuesday.

7. For **Thanksgiving Day**, between the hours of **6:00 AM** Tuesday and **8:00 PM** Monday.

8. For **Christmas**, between the hours of **6:00 AM** the Friday before the week of Christmas Day and **8:00 PM** the following Tuesday after the week of Christmas Day.

9. For **any special event**, occurring between 3 hours before the start of a special event and **3** hours after the end of **a special event, as directed by the Engineer**.

Holidays and holiday weekends shall include New Year's, Easter, Memorial Day, Independence Day, Labor Day, Thanksgiving, and Christmas. The Contractor shall schedule his work so that lane closures will not be required during these periods, unless otherwise directed by the Engineer.

The time of availability for this intermediate contract work shall be the time the Contractor begins to install all traffic control devices for lane closures according to the time restrictions listed herein.

The completion time for this intermediate contract work shall be the time the Contractor is required to complete the removal of all traffic control devices for lane closures according to the time restrictions stated above and place traffic in the existing traffic pattern.

The liquidated damages are **One Thousand Dollars ($ 1,000.00)** per hour.

INTERMEDIATE CONTRACT TIME NUMBER 2 AND LIQUIDATED DAMAGES:
(2-20-07) (5-29-13) 108 SP1 G14 A

The Contractor shall complete the required work of installing, maintaining, and removing the traffic control devices for lane closures and restoring traffic to the existing traffic pattern. The Contractor shall not close or narrow a lane of traffic on **any road other than US 52, US 29/US 70/ NC 150, US 601** during the following time restrictions:

DAY AND TIME RESTRICTIONS

Monday through Friday
from 6:00 AM to 8:00 PM

In addition, the Contractor shall not close or narrow a lane of traffic on **any road other than US 52, US 29/US 70/ NC 150, US 601**, detain and/or alter the traffic flow on or during holidays, holiday weekends, special events, or any other time when traffic is unusually heavy, including the following schedules:

HOLIDAY AND HOLIDAY WEEKEND LANE CLOSURE RESTRICTIONS

1. For **unexpected occurrence** that creates unusually high traffic volumes, as directed by the Engineer.

2. For **New Year's Day**, between the hours of **6:00 AM** December 31st and **8:00 PM** January 2nd. If New Year's Day is on a Friday, Saturday, Sunday or Monday, then until **8:00 PM** the following Tuesday.

3. For **Easter**, between the hours of **6:00 AM** Thursday and **8:00 PM** Monday.

4. For **Memorial Day**, between the hours of **6:00 AM** Friday and **8:00 PM** Tuesday.

5. For **Independence Day**, between the hours of **6:00 AM** the day before Independence Day and **8:00 PM** the day after Independence Day.

   If **Independence Day** is on a Friday, Saturday, Sunday or Monday, then between the hours of **6:00 AM** the Thursday before Independence Day and **8:00 PM** the Tuesday after Independence Day.

6. For **Labor Day**, between the hours of **6:00 AM** Friday and **8:00 PM** Tuesday.

7. For **Thanksgiving Day**, between the hours of **6:00 AM** Tuesday and **8:00 PM** Monday.

8. For **Christmas**, between the hours of **6:00 AM** the Friday before the week of Christmas Day and **8:00 PM** the following Tuesday after the week of Christmas Day.

9. For **any special event**, occurring between 3 hours before the start of a special event and **3** hours after the end of **a special event, as directed by the Engineer**.

Holidays and holiday weekends shall include New Year's, Easter, Memorial Day, Independence Day, Labor Day, Thanksgiving, and Christmas. The Contractor shall schedule his work so that lane closures will not be required during these periods, unless otherwise directed by the Engineer.

The time of availability for this intermediate contract work shall be the time the Contractor begins to install all traffic control devices for lane closures according to the time restrictions listed herein.

The completion time for this intermediate contract work shall be the time the Contractor is required to complete the removal of all traffic control devices for lane closures according to the time restrictions stated above and place traffic in the existing traffic pattern.

The liquidated damages are **Five Hundred Dollars ($ 500.00)** per hour.

INTERMEDIATE CONTRACT TIME NUMBER 3 AND LIQUIDATED DAMAGES:

The Contractor shall complete the required work of installing, maintaining and removing the traffic control devices for road closures and restoring traffic to the existing traffic pattern. The Contractor shall not close **any road** during the following time restrictions:

DAY AND TIME RESTRICTIONS

Monday through Sunday
from 6:00 AM to 12:00 AM (midnight)

The maximum allowable time for **installation of cables across any road** is **20** minutes. The Contractor shall reopen the travel lanes to traffic until any resulting traffic queue is depleted.

The time of availability for this intermediate contract time will be the time the Contractor begins to install traffic control devices required for the road closures according to the time restrictions stated herein.

The completion time for this intermediate contract time will be the time the Contractor is required to complete the removal of traffic control devices required for the road closures according to the time restrictions stated herein and restore traffic to the existing traffic pattern.

The liquidated damages are **Five Hundred Dollars ($ 500.00)** per **20** minute time period.

MAJOR CONTRACT ITEMS:
(2-19-02) 104 SP1 G28

The following listed items are the major contract items for this contract (see Article 104-5 of the *2012 Standard Specifications*):

Line #	Description
51	Controller with Cabinet and Aux File (2070L, 332 Base Mounted)

NO SPECIALTY ITEMS:
(7-1-95) 108-6 SP1 G34

None of the items included in this contract will be specialty items (see Article 108-6 of the *2012 Standard Specifications*).

SCHEDULE OF ESTIMATED COMPLETION PROGRESS:
(7-15-08) (Rev. 5-21-13) 108-2 SP1 G58

The Contractor's attention is directed to the Standard Special Provision entitled *Availability of Funds Termination of Contracts* included elsewhere in this proposal. The Department of Transportation's schedule of estimated completion progress for this project as required by that Standard Special Provision is as follows:

Fiscal Year		Progress (% of Dollar Value)
2014	(7/01/13 - 6/30/14)	58 % of Total Amount Bid
2015	(7/01/14 - 6/30/15)	42 % of Total Amount Bid

The Contractor shall also furnish his own progress schedule in accordance with Article 108-2 of the *2012 Standard Specifications*. Any acceleration of the progress as shown by the Contractor's progress schedule over the progress as shown above shall be subject to the approval of the Engineer.

DISADVANTAGED BUSINESS ENTERPRISE:
(10-16-07)(Rev. 5-21-13) 102-15(J) SP1 G61

Description

The purpose of this Special Provision is to carry out the U.S. Department of Transportation's policy of ensuring nondiscrimination in the award and administration of contracts financed in whole or in part with Federal funds. This provision is guided by 49 CFR Part 26.

Definitions

Additional DBE Subcontractors - Any DBE submitted at the time of bid that will not be used to meet the DBE goal. No submittal of a Letter of Intent is required.

Committed DBE Subcontractor - Any DBE submitted at the time of bid that is being used to meet the DBE goal by submission of a Letter of Intent. Or any DBE used as a replacement for a previously committed DBE firm.

Contract Goal Requirement - The approved DBE participation at time of award, but not greater than the advertised contract goal.

DBE Goal - A portion of the total contract, expressed as a percentage, that is to be performed by committed DBE subcontractor(s).

Disadvantaged Business Enterprise (DBE) - A firm certified as a Disadvantaged Business Enterprise through the North Carolina Unified Certification Program.

Goal Confirmation Letter - Written documentation from the Department to the bidder confirming the Contractor's approved, committed DBE participation along with a listing of the committed DBE firms.

Manufacturer - A firm that operates or maintains a factory or establishment that produces on the premises, the materials or supplies obtained by the Contractor.

Regular Dealer - A firm that owns, operates, or maintains a store, warehouse, or other establishment in which the materials or supplies required for the performance of the contract are bought, kept in stock, and regularly sold to the public in the usual course of business. A regular dealer engages in, as its principal business and in its own name, the purchase and sale or lease of the products in question. A regular dealer in such bulk items as steel, cement, gravel, stone, and petroleum products need not keep such products in stock, if it owns and operates distribution equipment for the products. Brokers and packagers are not regarded as manufacturers or regular dealers within the meaning of this section.

North Carolina Unified Certification Program (NCUCP) - A program that provides comprehensive services and information to applicants for DBE certification, such that an applicant is required to apply only once for a DBE certification that will be honored by all recipients of USDOT funds in the state and not limited to the Department of Transportation only. The Certification Program is in accordance with 49 CFR Part 26.

United States Department of Transportation (USDOT) - Federal agency responsible for issuing regulations (49 CFR Part 26) and official guidance for the DBE program.

Forms and Websites Referenced in this Provision

DBE Payment Tracking System - On-line system in which the Contractor enters the payments made to DBE subcontractors who have performed work on the project. https://apps.dot.state.nc.us/Vendor/PaymentTracking/

DBE-IS *Subcontractor Payment Information* - Form for reporting the payments made to all DBE firms working on the project. This form is for paper bid projects only. http://www.ncdot.org/doh/forms/files/DBE-IS.xls

RF-1 *DBE Replacement Request Form* - Form for replacing a committed DBE. http://connect.ncdot.gov/projects/construction/Construction%20Forms/DBE%20MBE%20WBE%20Replacement%20Request%20Form.pdf

SAF *Subcontract Approval Form* - Form required for approval to sublet the contract. http://connect.ncdot.gov/projects/construction/Construction%20Forms/Subcontract%20Approval%20Form%20Rev.%202012.zip

JC-1 *Joint Check Notification Form* - Form and procedures for joint check notification. The form acts as a written joint check agreement among the parties providing full and prompt disclosure of the expected use of joint checks. http://connect.ncdot.gov/projects/construction/Construction%20Forms/Joint%20Check%20Notification%20Form.pdf

Letter of Intent - Form signed by the Contractor and the DBE subcontractor, manufacturer or regular dealer that affirms that a portion of said contract is going to be performed by the signed DBE for the amount listed at the time of bid. http://connect.ncdot.gov/letting/LetCentral/Letter%20of%20Intent%20to%20Perform%20as%20a%20Subcontractor.pdf

Listing of DBE Subcontractors Form - Form for entering DBE subcontractors on a project that will meet this DBE goal. This form is for paper bids only. http://connect.ncdot.gov/municipalities/Bid%20Proposals%20for%20LGA%20Content/08%20DBE%20Subcontractors%20(Federal).doc

Subcontractor Quote Comparison Sheet - Spreadsheet for showing all subcontractor quotes in the work areas where DBEs quoted on the project. This sheet is submitted with good faith effort packages. http://connect.ncdot.gov/business/SmallBusiness/Documents/DBE%20Subcontractor%20Quote%20Comparison%20Example.xls

DBE Goal

The following DBE goal for participation by Disadvantaged Business Enterprises is established for this contract:

Disadvantaged Business Enterprises **3.0** %

(A) *If the DBE goal is more than zero*, the Contractor shall exercise all necessary and reasonable steps to ensure that DBEs participate in at least the percent of the contract as set forth above as the DBE goal.

(B) *If the DBE goal is zero*, the Contractor shall make an effort to recruit and use DBEs during the performance of the contract. Any DBE participation obtained shall be reported to the Department.

Directory of Transportation Firms (Directory)

Real-time information is available about firms doing business with the Department and firms that are certified through NCUCP in the Directory of Transportation Firms. Only firms identified in the Directory as DBE certified shall be used to meet the DBE goal. The Directory can be found at the following link. https://partner.ncdot.gov/VendorDirectory/default.html

The listing of an individual firm in the directory shall not be construed as an endorsement of the firm's capability to perform certain work.

Listing of DBE Subcontractors

At the time of bid, bidders shall submit all DBE participation that they anticipate to use during the life of the contract. Only those identified to meet the DBE goal will be considered committed, even though the listing shall include both committed DBE subcontractors and additional DBE subcontractors. Additional DBE subcontractor participation submitted at the time of bid will be used toward the Department's overall race-neutral goal. Only those firms with current DBE certification at the time of bid opening will be acceptable for listing in the bidder's submittal of DBE participation. The Contractor shall indicate the following required information:

(A) Electronic Bids

Bidders shall submit a listing of DBE participation in the appropriate section of Expedite, the bidding software of Bid Express®.

(1) Submit the names and addresses of DBE firms identified to participate in the contract. If the bidder uses the updated listing of DBE firms shown in Expedite, the bidder may use the dropdown menu to access the name and address of the DBE firm.

(2) Submit the contract line numbers of work to be performed by each DBE firm. When no figures or firms are entered, the bidder will be considered to have no DBE participation.

(3) The bidder shall be responsible for ensuring that the DBE is certified at the time of bid by checking the Directory of Transportation Firms. If the firm is not certified at the time of the bid-letting, that DBE's participation will not count towards achieving the DBE goal.

(B) Paper Bids

Blank forms will not be deemed to represent zero participation. Bids submitted that do not have DBE participation indicated on the appropriate form will not be read publicly during the opening of bids. The Department will not consider these bids for award and the proposal will be rejected.

(1) *If the DBE goal is more than zero,*

(a) Bidders, at the time the bid proposal is submitted, shall submit a listing of DBE participation, including the names and addresses on *Listing of*

DBE Subcontractors contained elsewhere in the contract documents in order for the bid to be considered responsive. Bidders shall indicate the total dollar value of the DBE participation for the contract.

(b) If bidders have no DBE participation, they shall indicate this on the *Listing of DBE Subcontractors* by entering the word "None" or the number "0." This form shall be completed in its entirety.

(c) The bidder shall be responsible for ensuring that the DBE is certified at the time of bid by checking the Directory of Transportation Firms. If the firm is not certified at the time of the bid-letting, that DBE's participation will not count towards achieving the DBE goal.

(2) *If the DBE goal is zero,* bidders, at the time the bid proposal is submitted, shall enter the word "None"; or the number "0"; or if there is participation, add the value on the *Listing of DBE Subcontractors* contained elsewhere in the contract documents.

DBE Prime Contractor

When a certified DBE firm bids on a contract that contains a DBE goal, the DBE firm is responsible for meeting the goal or making good faith efforts to meet the goal, just like any other bidder. In most cases, a DBE bidder on a contract will meet the DBE goal by virtue of the work it performs on the contract with its own forces. However, all the work that is performed by the DBE bidder and any other DBE subcontractors will count toward the DBE goal. The DBE bidder shall list itself along with any DBE subcontractors, if any, in order to receive credit toward the DBE goal.

For example, if the DBE goal is 45% and the DBE bidder will only perform 40% of the contract work, the prime will list itself at 40%, and the additional 5% shall be obtained through additional DBE participation with DBE subcontractors or documented through a good faith effort.

DBE prime contractors shall also follow Sections A and B listed under *Listing of DBE Subcontractor* just as a non-DBE bidder would.

Written Documentation – Letter of Intent

The bidder shall submit written documentation for each DBE that will be used to meet the DBE goal of the contract, indicating the bidder's commitment to use the DBE in the contract. This documentation shall be submitted on the Department's form titled *Letter of Intent.*

The documentation shall be received in the office of the State Contractor Utilization Engineer or at DBE@ncdot.gov no later than 12:00 noon of the sixth calendar day following opening of bids, unless the sixth day falls on an official state holiday. In that situation, it is due in the office of the State Contractor Utilization Engineer no later than 12:00 noon on the next official state business day.

If the bidder fails to submit the Letter of Intent from each committed DBE to be used toward the DBE goal, or if the form is incomplete (i.e. both signatures are not present), the DBE participation will not count toward meeting the DBE goal. If the lack of this participation drops the commitment below the DBE goal, the Contractor shall submit evidence of good faith

efforts, completed in its entirety, to the State Contractor Utilization Engineer or DBE@ncdot.gov no later than 12:00 noon on the eighth calendar day following opening of bids, unless the eighth day falls on an official state holiday. In that situation, it is due in the office of the State Contractor Utilization Engineer no later than 12:00 noon on the next official state business day.

Submission of Good Faith Effort

If the bidder fails to meet or exceed the DBE goal, the apparent lowest responsive bidder shall submit to the Department documentation of adequate good faith efforts made to reach the DBE goal.

A hard copy and an electronic copy of this information shall be received in the office of the State Contractor Utilization Engineer or at DBE@ncdot.gov no later than 12:00 noon of the sixth calendar day following opening of bids unless the sixth day falls on an official state holiday. In that situation, it is due in the office of the State Contractor Utilization Engineer the next official state business day. If the contractor cannot send the information electronically, then one complete set and 9 copies of this information shall be received under the same time constraints above.

Note: Where the information submitted includes repetitious solicitation letters, it will be acceptable to submit a representative letter along with a distribution list of the firms that were solicited. Documentation of DBE quotations shall be a part of the good faith effort submittal. This documentation may include written subcontractor quotations, telephone log notations of verbal quotations, or other types of quotation documentation.

Consideration of Good Faith Effort for Projects with DBE Goals More Than Zero

Adequate good faith efforts mean that the bidder took all necessary and reasonable steps to achieve the goal which, by their scope, intensity, and appropriateness, could reasonably be expected to obtain sufficient DBE participation. Adequate good faith efforts also mean that the bidder actively and aggressively sought DBE participation. Mere *pro forma* efforts are not considered good faith efforts.

The Department will consider the quality, quantity, and intensity of the different kinds of efforts a bidder has made. Listed below are examples of the types of actions a bidder will take in making a good faith effort to meet the goal and are not intended to be exclusive or exhaustive, nor is it intended to be a mandatory checklist.

(A) Soliciting through all reasonable and available means (e.g. attendance at pre-bid meetings, advertising, written notices, use of verifiable electronic means through the use of the NCDOT Directory of Transportation Firms) the interest of all certified DBEs who have the capability to perform the work of the contract. The bidder must solicit this interest within at least 10 days prior to bid opening to allow the DBEs to respond to the solicitation. Solicitation shall provide the opportunity to DBEs within the Division and surrounding Divisions where the project is located. The bidder must determine with certainty if the DBEs are interested by taking appropriate steps to follow up initial solicitations.

(B) Selecting portions of the work to be performed by DBEs in order to increase the likelihood that the DBE goals will be achieved.

(1) Where appropriate, break out contract work items into economically feasible units to facilitate DBE participation, even when the prime contractor might otherwise prefer to perform these work items with its own forces.

(2) Negotiate with subcontractors to assume part of the responsibility to meet the contract DBE goal when the work to be sublet includes potential for DBE participation (2nd and 3rd tier subcontractors).

(C) Providing interested DBEs with adequate information about the plans, specifications, and requirements of the contract in a timely manner to assist them in responding to a solicitation.

(D) (1) Negotiating in good faith with interested DBEs. It is the bidder's responsibility to make a portion of the work available to DBE subcontractors and suppliers and to select those portions of the work or material needs consistent with the available DBE subcontractors and suppliers, so as to facilitate DBE participation. Evidence of such negotiation includes the names, addresses, and telephone numbers of DBEs that were considered; a description of the information provided regarding the plans and specifications for the work selected for subcontracting; and evidence as to why additional agreements could not be reached for DBEs to perform the work.

(2) A bidder using good business judgment would consider a number of factors in negotiating with subcontractors, including DBE subcontractors, and would take a firm's price and capabilities as well as contract goals into consideration. However, the fact that there may be some additional costs involved in finding and using DBEs is not in itself sufficient reason for a bidder's failure to meet the contract DBE goal, as long as such costs are reasonable. Also, the ability or desire of a prime contractor to perform the work of a contract with its own organization does not relieve the bidder of the responsibility to make good faith efforts. Bidding contractors are not, however, required to accept higher quotes from DBEs if the price difference is excessive or unreasonable.

(E) Not rejecting DBEs as being unqualified without sound reasons based on a thorough investigation of their capabilities. The bidder's standing within its industry, membership in specific groups, organizations, or associates and political or social affiliations (for example, union vs. non-union employee status) are not legitimate causes for the rejection or non-solicitation of bids in the bidder's efforts to meet the project goal.

(F) Making efforts to assist interested DBEs in obtaining bonding, lines of credit, or insurance as required by the recipient or bidder.

(G) Making efforts to assist interested DBEs in obtaining necessary equipment, supplies, materials, or related assistance or services.

(H) Effectively using the services of available minority/women community organizations; minority/women contractors' groups; Federal, State, and local minority/women business assistance offices; and other organizations as allowed on a case-by-case basis to provide assistance in the recruitment and placement of DBEs. Contact within 7 days from the bid opening the Business Development Manager in the Business Opportunity and Work Force Development Unit to give notification of the bidder's inability to get DBE quotes.

(I) Any other evidence that the bidder submits which shows that the bidder has made reasonable good faith efforts to meet the DBE goal.

In addition, the Department may take into account the following:

(1) Whether the bidder's documentation reflects a clear and realistic plan for achieving the DBE goal.

(2) The bidders' past performance in meeting the DBE goals.

(3) The performance of other bidders in meeting the DBE goal. For example, when the apparent successful bidder fails to meet the DBE goal, but others meet it, you may reasonably raise the question of whether, with additional reasonable efforts the apparent successful bidder could have met the goal. If the apparent successful bidder fails to meet the DBE goal, but meets or exceeds the average DBE participation obtained by other bidders, the Department may view this, in conjunction with other factors, as evidence of the apparent successful bidder having made a good faith effort.

If the Department does not award the contract to the apparent lowest responsive bidder, the Department reserves the right to award the contract to the next lowest responsive bidder that can satisfy to the Department that the DBE goal can be met or that an adequate good faith effort has been made to meet the DBE goal.

Non-Good Faith Appeal

The State Contractor Utilization Engineer will notify the contractor verbally and in writing of non-good faith. A contractor may appeal a determination of non-good faith made by the Goal Compliance Committee. If a contractor wishes to appeal the determination made by the Committee, they shall provide written notification to the State Contractual Services Engineer or at DBE@ncdot.gov. The appeal shall be made within 2 business days of notification of the determination of non-good faith.

Counting DBE Participation Toward Meeting DBE Goal

(A) Participation

The total dollar value of the participation by a committed DBE will be counted toward the contract goal requirement. The total dollar value of participation by a committed DBE will be based upon the value of work actually performed by the DBE and the actual payments to DBE firms by the Contractor.

(B) Joint Checks

Prior notification of joint check use shall be required when counting DBE participation for services or purchases that involves the use of a joint check. Notification shall be through submission of Form JC-1 *(Joint Check Notification Form)* and the use of joint checks shall be in accordance with the Department's Joint Check Procedures.

(C) Subcontracts (Non-Trucking)

A DBE may enter into subcontracts. Work that a DBE subcontracts to another DBE firm may be counted toward the contract goal requirement. Work that a DBE subcontracts to a non-DBE firm does not count toward the contract goal requirement. If a DBE contractor or subcontractor subcontracts a significantly greater portion of the work of the contract than would be expected on the basis of standard industry practices, it shall be presumed that the DBE is not performing a commercially useful function. The DBE may present evidence to rebut this presumption to the Department. The Department's decision on the rebuttal of this presumption is subject to review by the Federal Highway Administration but is not administratively appealable to USDOT.

(D) Joint Venture

When a DBE performs as a participant in a joint venture, the Contractor may count toward its contract goal requirement a portion of the total value of participation with the DBE in the joint venture, that portion of the total dollar value being a distinct clearly defined portion of work that the DBE performs with its forces.

(E) Suppliers

A contractor may count toward its DBE requirement 60 percent of its expenditures for materials and supplies required to complete the contract and obtained from a DBE regular dealer and 100 percent of such expenditures from a DBE manufacturer.

(F) Manufacturers and Regular Dealers

A contractor may count toward its DBE requirement the following expenditures to DBE firms that are not manufacturers or regular dealers:

(1) The fees or commissions charged by a DBE firm for providing a *bona fide* service, such as professional, technical, consultant, or managerial services, or for providing bonds or insurance specifically required for the performance of a DOT-assisted contract, provided the fees or commissions are determined to be reasonable and not excessive as compared with fees and commissions customarily allowed for similar services.

(2) With respect to materials or supplies purchased from a DBE, which is neither a manufacturer nor a regular dealer, count the entire amount of fees or commissions charged for assistance in the procurement of the materials and supplies, or fees or transportation charges for the delivery of materials or supplies required on a job site (but not the cost of the materials and supplies themselves),

provided the fees are determined to be reasonable and not excessive as compared with fees customarily allowed for similar services.

Commercially Useful Function

(A) DBE Utilization

The Contractor may count toward its contract goal requirement only expenditures to DBEs that perform a commercially useful function in the work of a contract. A DBE performs a commercially useful function when it is responsible for execution of the work of the contract and is carrying out its responsibilities by actually performing, managing, and supervising the work involved. To perform a commercially useful function, the DBE shall also be responsible with respect to materials and supplies used on the contract, for negotiating price, determining quality and quantity, ordering the material and installing (where applicable) and paying for the material itself. To determine whether a DBE is performing a commercially useful function, the Department will evaluate the amount of work subcontracted, industry practices, whether the amount the firm is to be paid under the contract is commensurate with the work it is actually performing and the DBE credit claimed for its performance of the work, and any other relevant factors.

(B) DBE Utilization in Trucking

The following factors will be used to determine if a DBE trucking firm is performing a commercially useful function:

(1) The DBE shall be responsible for the management and supervision of the entire trucking operation for which it is responsible on a particular contract, and there shall not be a contrived arrangement for the purpose of meeting DBE goals.

(2) The DBE shall itself own and operate at least one fully licensed, insured, and operational truck used on the contract.

(3) The DBE receives credit for the total value of the transportation services it provides on the contract using trucks it owns, insures, and operates using drivers it employs.

(4) The DBE may subcontract the work to another DBE firm, including an owner-operator who is certified as a DBE. The DBE who subcontracts work to another DBE receives credit for the total value of the transportation services the subcontracted DBE provides on the contract.

(5) The DBE may also subcontract the work to a non-DBE firm, including from an owner-operator. The DBE who subcontracts the work to a non-DBE is entitled to credit for the total value of transportation services provided by the non-DBE subcontractor not to exceed the value of transportation services provided by DBE-owned trucks on the contract. Additional participation by non-DBE subcontractors receives credit only for the fee or commission it receives as a result of the subcontract arrangement. The value of services performed under

subcontract agreements between the DBE and the Contractor will not count towards the DBE contract requirement.

(6) A DBE may lease truck(s) from an established equipment leasing business open to the general public. The lease must indicate that the DBE has exclusive use of and control over the truck. This requirement does not preclude the leased truck from working for others during the term of the lease with the consent of the DBE, so long as the lease gives the DBE absolute priority for use of the leased truck. This type of lease may count toward the DBE's credit as long as the driver is under the DBE's payroll.

(7) Subcontracted/leased trucks shall display clearly on the dashboard the name of the DBE that they are subcontracted/leased to and their own company name if it is not identified on the truck itself. Magnetic door signs are not permitted.

DBE Replacement

When a Contractor has relied on a commitment to a DBE firm (or an approved substitute DBE firm) to meet all or part of a contract goal requirement, the contractor shall not terminate the DBE for convenience. This includes, but is not limited to, instances in which the Contractor seeks to perform the work of the terminated subcontractor with another DBE subcontractor, a non-DBE subcontractor, or with the Contractor's own forces or those of an affiliate. A DBE may only be terminated after receiving the Engineer's written approval based upon a finding of good cause for the termination.

All requests for replacement of a committed DBE firm shall be submitted to the Engineer for approval on Form RF-1 *(DBE Replacement Request).* If the Contractor fails to follow this procedure, the Contractor may be disqualified from further bidding for a period of up to 6 months.

The Contractor shall comply with the following for replacement of a committed DBE:

(A) Performance Related Replacement

When a committed DBE is terminated for good cause as stated above, an additional DBE that was submitted at the time of bid may be used to fulfill the DBE commitment. A good faith effort will only be required for removing a committed DBE if there were no additional DBEs submitted at the time of bid to cover the same amount of work as the DBE that was terminated.

If a replacement DBE is not found that can perform at least the same amount of work as the terminated DBE, the Contractor shall submit a good faith effort documenting the steps taken. Such documentation shall include, but not be limited to, the following:

(1) Copies of written notification to DBEs that their interest is solicited in contracting the work defaulted by the previous DBE or in subcontracting other items of work in the contract.

(2) Efforts to negotiate with DBEs for specific subbids including, at a minimum:

(a) The names, addresses, and telephone numbers of DBEs who were contacted.

(b) A description of the information provided to DBEs regarding the plans and specifications for portions of the work to be performed.

(3) A list of reasons why DBE quotes were not accepted.

(4) Efforts made to assist the DBEs contacted, if needed, in obtaining bonding or insurance required by the Contractor.

(B) Decertification Replacement

(1) When a committed DBE is decertified by the Department after the SAF (*Subcontract Approval Form*) has been received by the Department, the Department will not require the Contractor to solicit replacement DBE participation equal to the remaining work to be performed by the decertified firm. The participation equal to the remaining work performed by the decertified firm will count toward the contract goal requirement.

(2) When a committed DBE is decertified prior to the Department receiving the SAF (*Subcontract Approval Form*) for the named DBE firm, the Contractor shall take all necessary and reasonable steps to replace the DBE subcontractor with another DBE subcontractor to perform at least the same amount of work to meet the DBE goal requirement. If a DBE firm is not found to do the same amount of work, a good faith effort must be submitted to NCDOT (see A herein for required documentation).

Changes in the Work

When the Engineer makes changes that result in the reduction or elimination of work to be performed by a committed DBE, the Contractor will not be required to seek additional participation. When the Engineer makes changes that result in additional work to be performed by a DBE based upon the Contractor's commitment, the DBE shall participate in additional work to the same extent as the DBE participated in the original contract work.

When the Engineer makes changes that result in extra work, which has more than a minimal impact on the contract amount, the Contractor shall seek additional participation by DBEs unless otherwise approved by the Engineer.

When the Engineer makes changes that result in an alteration of plans or details of construction, and a portion or all of the work had been expected to be performed by a committed DBE, the Contractor shall seek participation by DBEs unless otherwise approved by the Engineer.

When the Contractor requests changes in the work that result in the reduction or elimination of work that the Contractor committed to be performed by a DBE, the Contractor shall seek additional participation by DBEs equal to the reduced DBE participation caused by the changes.

Reports and Documentation

A SAF (*Subcontract Approval Form*) shall be submitted for all work which is to be performed by a DBE subcontractor. The Department reserves the right to require copies of actual subcontract agreements involving DBE subcontractors.

When using transportation services to meet the contract commitment, the Contractor shall submit a proposed trucking plan in addition to the SAF. The plan shall be submitted prior to beginning construction on the project. The plan shall include the names of all trucking firms proposed for use, their certification type(s), the number of trucks owned by the firm, as well as the individual truck identification numbers, and the line item(s) being performed.

Within 30 calendar days of entering into an agreement with a DBE for materials, supplies or services, not otherwise documented by the SAF as specified above, the Contractor shall furnish the Engineer a copy of the agreement. The documentation shall also indicate the percentage (60% or 100%) of expenditures claimed for DBE credit.

Reporting Disadvantaged Business Enterprise Participation

The Contractor shall provide the Engineer with an accounting of payments made to all DBE firms, including material suppliers and contractors at all levels (prime, subcontractor, or second tier subcontractor). This accounting shall be furnished to the Engineer for any given month by the end of the following month. Failure to submit this information accordingly may result in the following action:

(A) Withholding of money due in the next partial pay estimate; or

(B) Removal of an approved contractor from the prequalified bidders' list or the removal of other entities from the approved subcontractors list.

While each contractor (prime, subcontractor, 2nd tier subcontractor) is responsible for accurate accounting of payments to DBEs, it shall be the prime contractor's responsibility to report all monthly and final payment information in the correct reporting manner.

Failure on the part of the Contractor to submit the required information in the time frame specified may result in the disqualification of that contractor and any affiliate companies from further bidding until the required information is submitted.

Failure on the part of any subcontractor to submit the required information in the time frame specified may result in the disqualification of that contractor and any affiliate companies from being approved for work on future DOT projects until the required information is submitted.

Contractors reporting transportation services provided by non-DBE lessees shall evaluate the value of services provided during the month of the reporting period only.

At any time, the Engineer can request written verification of subcontractor payments.

(A) Electronic Bids Reporting

The Contractor shall report the accounting of payments through the Department's DBE Payment Tracking System.

(B) Paper Bids Reporting

The Contractor shall report the accounting of payments on the Department's DBE-IS *(Subcontractor Payment Information)* with each invoice. Invoices will not be processed for payment until the DBE-IS is received.

Failure to Meet Contract Requirements

Failure to meet contract requirements in accordance with Subarticle 102-15(J) of the *2012 Standard Specifications* may be cause to disqualify the Contractor.

CERTIFICATION FOR FEDERAL-AID CONTRACTS:

(3-21-90) SP1 G85

The prospective participant certifies, by signing and submitting this bid or proposal, to the best of his or her knowledge and belief, that:

(A) No Federal appropriated funds have been paid or will be paid, by or on behalf of the undersigned, to any person for influencing or attempting to influence an officer or employee of any Federal agency, a Member of Congress, an officer or employee of Congress, or an employee of a Member of Congress in connection with the awarding of any Federal contract, the making of any Federal grant, the making of any Federal loan, the entering into of any cooperative agreement, and the extension, continuation, renewal, amendment, or modification of any Federal contract, grant, loan, or cooperative agreement.

(B) If any funds other than Federal appropriated funds have been paid or will be paid to any person for influencing or attempting to influence an officer or employee of any Federal agency, a Member of Congress, an officer or employee of Congress, or an employee of a Member of Congress in connection with this Federal contract, grant, loan, or cooperative agreement, the undersigned shall complete and submit Standard Form-LLL, *Disclosure Form to Report Lobbying*, in accordance with its instructions.

This certification is a material representation of fact upon which reliance was placed when this transaction was made or entered into. Submission of this certification is a prerequisite for making or entering into this transaction imposed by *Section 1352, Title 31, U.S. Code.* Any person who fails to file the required certification shall be subject to a civil penalty of not less than $10,000 and not more than $100,000 for each such failure.

The prospective participant also agrees by submitting his or her bid or proposal that he or she shall require that the language of this certification be included in all lower tier subcontracts, which exceed $100,000 and that all such subrecipients shall certify and disclose accordingly.

CONTRACTOR'S LICENSE REQUIREMENTS:

(7-1-95) 102-14 SP1 G88

If the successful bidder does not hold the proper license to perform any plumbing, heating, air conditioning, or electrical work in this contract, he will be required to sublet such work to a contractor properly licensed in accordance with *Article 2 of Chapter 87 of the General Statutes* (licensing of heating, plumbing, and air conditioning contractors) and *Article 4 of Chapter 87* of the *General Statutes* (licensing of electrical contractors).

U.S. DEPARTMENT OF TRANSPORTATION HOTLINE:
(11-22-94) 108-5 SP1 G100

To report bid rigging activities call: **1-800-424-9071**

The U.S. Department of Transportation (DOT) operates the above toll-free hotline Monday through Friday, 8:00 a.m. to 5:00 p.m. eastern time. Anyone with knowledge of possible bid rigging, bidder collusion, or other fraudulent activities should use the hotline to report such activities.

The hotline is part of the DOT's continuing effort to identify and investigate highway construction contract fraud and abuse is operated under the direction of the DOT Inspector General. All information will be treated confidentially and caller anonymity will be respected.

SUBSURFACE INFORMATION:
(7-1-95) 450 SP1 G112 A

There is **no** subsurface information available on this project. The Contractor shall make his own investigation of subsurface conditions.

LOCATING EXISTING UNDERGROUND UTILITIES:
(3-20-12) 105 SP1 G115

Revise the *2012 Standard Specifications* as follows:

Page 1-43, Article 105-8, line 28, after the first sentence, add the following:

Identify excavation locations by means of pre-marking with white paint, flags, or stakes or provide a specific written description of the location in the locate request.

RESOURCE CONSERVATION:
(5-21-13) 104-13 SP1 G118

In accordance with North Carolina Executive Order 156, NCGS 130A-309.14(2), and NCGS 136-28.8, it is the policy of the Department to aid in the reduction of materials that become a part of our solid waste stream, to divert materials from landfills, and to find ways to recycle and reuse materials for the benefit of the Citizens of North Carolina.

Initiate, develop and use products and construction methods that incorporate the use of recycled or solid waste products in accordance with Article 104-13 of the *2012 Standard Specifications*. Report the quantities of reused or recycled materials either incorporated in the project or diverted from landfills on the Project Construction Reuse and Recycling Reporting Form.

A location-based tool for finding local recycling facilities and the Project Construction Reuse and Recycling Reporting Form are available at:

http://connect.ncdot.gov/resources/Environmental/Pages/North-Carolina-Recycling-Locations.aspx

DOMESTIC STEEL:
(4-16-13) 106 SP1 G120

Revise the *2012 Standard Specifications* as follows:

Page 1-49, Subarticle 106-1(B) Domestic Steel, lines 2-7, replace the first paragraph with the following:

All steel and iron products that are permanently incorporated into this project shall be produced in the United States except minimal amounts of foreign steel and iron products may be used provided the combined material cost of the items involved does not exceed 0.1% of the total amount bid for the entire project or $2,500, whichever is greater. If invoices showing the cost of the material are not provided, the amount of the bid item involving the foreign material will be used for calculations. This minimal amount of foreign produced steel and iron products permitted for use is not applicable to high strength fasteners. Domestically produced high strength fasteners are required.

GIFTS FROM VENDORS AND CONTRACTORS:
(12-15-09) 107-1 SP1 G152

By Executive Order 24, issued by Governor Perdue, and *N.C.G.S.§ 133-32,* it is unlawful for any vendor or contractor (i.e. architect, bidder, contractor, construction manager, design professional, engineer, landlord, offeror, seller, subcontractor, supplier, or vendor), to make gifts or to give favors to any State employee of the Governor's Cabinet Agencies (i.e. Administration, Commerce, Correction, Crime Control and Public Safety, Cultural Resources, Environment and Natural Resources, Health and Human Services, Juvenile Justice and Delinquency Prevention, Revenue, Transportation, and the Office of the Governor). This prohibition covers those vendors and contractors who:

(A) Have a contract with a governmental agency; or
(B) Have performed under such a contract within the past year; or
(C) Anticipate bidding on such a contract in the future.

For additional information regarding the specific requirements and exemptions, vendors and contractors are encouraged to review Executive Order 24 and *N.C.G.S. § 133-32.*

Executive Order 24 also encouraged and invited other State Agencies to implement the requirements and prohibitions of the Executive Order to their agencies. Vendors and contractors should contact other State Agencies to determine if those agencies have adopted Executive Order 24.

EMPLOYMENT:
(11-15-11) (Rev. 1-17-12) 108, 102 SP1 G184

Revise the *2012 Standard Specifications* as follows:

Page 1-20, Subarticle 102-15(O), delete and replace with the following:

(O) Failure to restrict a former Department employee as prohibited by Article 108-5.

Page 1-65, Article 108-5 Character of Workmen, Methods, and Equipment, line 32, delete all of line 32, the first sentence of the second paragraph and the first word of the second sentence of the second paragraph.

STATE HIGHWAY ADMINISTRATOR TITLE CHANGE:
(9-18-12) SP1 G185

Revise the *2012 Standard Specifications* as follows:

Replace all references to "State Highway Administrator" with "Chief Engineer".

PROJECT SPECIAL PROVISIONS

ROADWAY

MATERIALS:
(2-21-12) (Rev. 10-15-13) 1000, 1005, 1050, 1074, 1078, 1080, 1081, 1084, 1087, 1092 SP10 R01

Revise the *2012 Standard Specifications* as follows:

Page 10-1, Article 1000-1, DESCRIPTION, line 14, add the following:

Use materials which do not produce a mottled appearance through rusting or other staining of the finished concrete surface.

Page 10-5, Table 1000-1, REQUIREMENTS FOR CONCRETE, replace with the following:

TABLE 1000-1
REQUIREMENTS FOR CONCRETE

Class of Concrete	Min. Comp. Strength at 28 days	Maximum Water-Cement Ratio				Consistency Max. Slump		Cement Content			
		Air-Entrained Concrete		Non Air-Entrained Concrete		Vibrated	Non-Vibrated	Vibrated		Non- Vibrated	
		Rounded Aggregate	Angular Aggre-gate	Rounded Aggregate	Angular Aggre-gate			Min.	Max.	Min.	Max.
Units	*psi*					*inch*	*inch*	*lb/cy*	*lb/cy*	*lb/cy*	*lb/cy*
AA	4,500	0.381	0.426	-	-	3.5	-	639	715	-	-
AA Slip Form	4,500	0.381	0.426	-	-	1.5	-	639	715	-	-
Drilled Pier	4,500	-	-	0.450	0.450	-	5-7 dry 7-9 wet	-	-	640	800
A	3,000	0.488	0.532	0.550	0.594	3.5	4	564	-	602	-
B	2,500	0.488	0.567	0.559	0.630	2.5	4	508	-	545	-
B Slip Formed	2,500	0.488	0.567	-	-	1.5	-	508	-	-	-
Sand Light-weight	4,500	-	0.420	-	-	4	-	715	-	-	-
Latex Modified	3,000 7 day	0.400	0.400	-	-	6	-	658	-	-	-
Flowable Fill excavatable	150 max. at 56 days	as needed	as needed	as needed	as needed	-	Flow-able	-	-	40	100
Flowable Fill non-excavatable	125	as needed	as needed	as needed	as needed	-	Flow-able	-	-	100	as needed
Pavement	4,500 design, field 650 flexural, design only	0.559	0.559	-	-	1.5 slip form 3.0 hand place	-	526	-	-	-
Precast	See Table 1077-1	as needed	as needed	-	-	6	as needed	as needed	as needed	as needed	as needed
Prestress	per contract	See Table 1078-1	See Table 1078-1	-	-	8	-	564	as needed	-	-

Page 10-65, Article 1050-1, GENERAL, line 41, replace the first sentence with:

All fencing material and accessories shall meet Section 106.

Page 10-23, Table 1005-1, AGGREGATE GRADATION-COARSE AGGREGATE, replace with the following:

TABLE 1005-1
AGGREGATE GRADATION - COARSE AGGREGATE

Std. Size #	2"	1 1/2"	1"	3/4"	1/2"	3/8"	#4	#8	#10	#16	#40	#200	Remarks
	Percentage of Total by Weight Passing												
4	100	90-100	20-55	0-15	-	0-5	-	-	-	-	-	A	Asphalt Plant Mix
467M	100	95-100	-	35-70	-	0-30	0-5	-	-	-	-	A	Asphalt Plant Mix
5	-	100	90-100	20-55	0-10	0-5	-	-	-	-	-	A	AST, Sediment Control Stone
57	-	100	95-100	-	25-60	-	0-10	0-5	-	-	-	A	AST, Str. Concrete, Shoulder Drain, Sediment Control Stone
57M	-	100	95-100	-	25-45	-	0-10	0-5	-	-	-	A	AST, Concrete Pavement
6M	-	-	100	90-100	20-55	0-20	0-8	-	-	-	-	A	AST
67	-	-	100	90-100	-	20-55	0-10	0-5	-	-	-	A	AST, Str. Concrete, Asphalt Plant Mix
78M	-	-	-	100	98-100	75-100	20-45	0-15	-	-	-	A	Asphalt Plant Mix, AST, Str. Conc, Weep Hole Drains
14M	-	-	-	-	-	100	35-70	5-20	-	0-8	-	A	Asphalt Plant Mix, AST, Weep Hole Drains, Str. Concrete
9	-	-	-	-	-	100	85-100	10-40	-	0-10	-	A	AST
ABC	-	100	75-97	-	55-80	-	35-55	-	25-45	-	14-30	4-12[B]	Aggregate Base Course, Aggregate Stabilization
ABC (M)	-	100	75-100	-	45-79	-	20-40	-	0-25	-	-	0-12[B]	Maintenance Stabilization
Light-weight[C]	-	-	-	-	100	80-100	5-40	0-20	-	0-10	-	0-2.5	AST

A. See Subarticle 1005-4(A).
B. See Subarticle 1005-4(B).
C. For Lightweight Aggregate used in Structural Concrete, see Subarticle 1014-2(E)(6).

Page 10-115, Subarticle 1074-7(B), Gray Iron Castings, lines 10-11, replace with the first two sentences with the following:

Supply gray iron castings meeting all facets of AASHTO M 306 excluding proof load. Proof load testing will only be required for new casting designs during the design process, and conformance to M306 loading (40,000 lbs.) will be required only when noted on the design documents.

Page 10-126, Table 1078-1, REQUIREMENTS FOR CONCRETE, replace with the following:

TABLE 1078-1 REQUIREMENTS FOR CONCRETE		
Property	**28 Day Design Compressive Strength 6,000 psi or less**	**28 Day Design Compressive Strength greater than 6,000 psi**
Maximum Water/Cementitious Material Ratio	0.45	0.40
Maximum Slump without HRWR	3.5"	3.5"
Maximum Slump with HRWR	8"	8"
Air Content (upon discharge into forms)	5 + 2%	5 + 2%

Page 10-151, Article 1080-4 Inspection and Sampling, lines 18-22, replace (B), (C) and (D) with the following:

(B) At least 3 panels prepared as specified in 5.5.10 of AASHTO M 300, Bullet Hole Immersion Test.

(C) At least 3 panels of 4"x6"x1/4" for the Elcometer Adhesion Pull Off Test, ASTM D4541.

(D) A certified test report from an approved independent testing laboratory for the Salt Fog Resistance Test, Cyclic Weathering Resistance Test, and Bullet Hole Immersion Test as specified in AASHTO M 300.

(E) A certified test report from an approved independent testing laboratory that the product has been tested for slip coefficient and meets AASHTO M253, Class B.

Page 10-162, Subarticle 1081-1(A) Classifications, lines 4-7, delete the second and third sentences of the description for Type 3A.

Page 10-162, Subarticle 1081-1(B) Requirements, lines 26-30, replace the second paragraph with the following:

For epoxy resin systems used for embedding dowel bars, threaded rods, rebar, anchor bolts and other fixtures in hardened concrete, the manufacturer shall submit test results showing that the bonding system will obtain 125% of the specified required yield strength of the fixture. Furnish certification that, for the particular bolt grade, diameter and embedment depth required, the anchor system will not fail by adhesive failure and that there is no movement of the anchor bolt.

For certification and anchorage, use 3,000 psi as the minimum Portland cement concrete compressive strength used in this test. Use adhesives that meet Section 1081.

List the properties of the adhesive on the container and include density, minimum and maximum temperature application, setting time, shelf life, pot life, shear strength and compressive strength.

Page 10-169, Subarticle 1081-3(G) Anchor Bolt Adhesives, delete this subarticle.

Page 10-173, Article 1084-2 STEEL SHEET PILES, lines 37-38, replace first paragraph with the following:

Steel sheet piles detailed for permanent applications shall be hot rolled and meet ASTM A572 or ASTM A690 unless otherwise required by the plans. Steel sheet piles shall be coated as required by the plans. Galvanized sheet piles shall be coated in accordance with Section 1076. Metallized sheet piles shall be metallized in accordance to the Project Special Provision "Thermal Sprayed Coatings (Metallization)" with an 8 mil, 99.9% aluminum alloy coating and a 0.5 mil seal coating. Any portion of the metallized sheet piling encased in concrete shall receive a barrier coat. The barrier coat shall be an approved waterborne coating with a low-viscosity which readily absorbs into the pores of the aluminum thermal sprayed coating. The waterborne coating shall be applied at a spreading rate that results in a theoretical 1.5 mil dry film thickness. The manufacturer shall issue a letter of certification that the resin chemistry of the waterborne coating is compatible with the 99.9% aluminum thermal sprayed alloy and suitable for tidal water applications.

Page 10-179, Subarticle 1087-4(A) Composition, lines 39-41, replace the third paragraph with the following:

All intermixed and drop-on glass beads shall not contain more than 75 ppm arsenic or 200 ppm lead.

Page 10-180, Subarticle 1087-4(B) Physical Characteristics, line 8, replace the second paragraph with the following:

All intermixed and drop-on glass beads shall comply with NCGS § 136-30.2 and 23 USC § 109(r).

Page 10-181, Subarticle 1087-7(A) Intermixed and Drop-on Glass Beads, line 24, add the following after the first paragraph:

Use X-ray Fluorescence for the normal sampling procedure for intermixed and drop-on beads, without crushing, to check for any levels of arsenic and lead. If any arsenic or lead is detected, the sample shall be crushed and repeat the test using X-ray Fluorescence. If the X-ray Fluorescence test shows more than a LOD of 5 ppm, test the beads using United States Environmental Protection Agency Method 6010B, 6010C or 3052 for no more than 75 ppm arsenic or 200 ppm lead.

Page 10-204, Subarticle 1092-2(A) Performance and Test Requirements, replace **Table 1092-3 Minimum Coefficient of Retroreflection for NC Grade A** with the following:

TABLE 1092-3 MINIMUM COEFFICIENT OF RETROREFLECTION FOR NC GRADE A (Candelas Per Lux Per Square Meter)								
Observation Angle, degrees	**Entrance Angle, degrees**	**White**	**Yellow**	**Green**	**Red**	**Blue**	**Fluorescent Yellow Green**	**Fluorescent Yellow**
0.2	-4.0	525	395	52	95	30	420	315
0.2	30.0	215	162	22	43	10	170	130
0.5	-4.0	310	230	31	56	18	245	185
0.5	30.0	135	100	14	27	6	110	81
1.0	-4.0	**120**	60	8	16	3.6	64	48
1.0	30.0	45	34	4.5	9	2	36	27

TRUCK MOUNTED CHANGEABLE MESSAGE SIGNS:

(8-21-12) 1101.02 SP11 R10

Revise the *2012 Roadway Standard Drawings* as follows:

Drawing No. 1101.02, Sheet 12, TEMPORARY LANE CLOSURES, replace General Note #11 with the following:

11- TRUCK MOUNTED CHANGEABLE MESSAGE SIGNS (TMCMS) USED ON SHADOW VEHICLES FOR "IN LANE" ACTIVITIES SHALL BE A MINIMUM OF 43" X 73". THE DISPLAY PANEL SHALL HAVE FULL MATRIX CAPABILITY WITH THE CAPABILITY TO PROVIDE 2 MESSAGE LINES WITH 7 CHARACTERS PER LINE WITH A MINIMUM CHARACTER HEIGHT OF 18". FOR ADDITIONAL MESSAGING, CONTACT THE WORK ZONE TRAFFIC CONTROL SECTION.

12- TMCMS USED FOR ADVANCED WARNING ON VEHICLES LOCATED ON THE SHOULDER MAY BE SMALLER THAN 43" X 73". THE DISPLAY PANEL SHALL HAVE THE CAPABILITY TO PROVIDE 2 MESSAGE LINES WITH 7 CHARACTERS PER LINE WITH A MINIMUM CHARACTER HEIGHT OF 18". FOR ADDITIONAL MESSAGING, CONTACT THE WORK ZONE TRAFFIC CONTROL SECTION.

Drawing No. 1101.02, Sheet 13, TEMPORARY LANE CLOSURES, replace General Note #12 with the following:

12- TRUCK MOUNTED CHANGEABLE MESSAGE SIGNS (TMCMS) USED ON SHADOW VEHICLES FOR "IN LANE" ACTIVITIES SHALL BE A MINIMUM OF 43" X 73". THE DISPLAY PANEL SHALL HAVE FULL MATRIX CAPABILITY WITH THE CAPABILITY TO PROVIDE 2 MESSAGE LINES WITH 7 CHARACTERS PER LINE WITH A MINIMUM CHARACTER HEIGHT OF 18". FOR ADDITIONAL MESSAGING, CONTACT THE WORK ZONE TRAFFIC CONTROL SECTION.

13- TMCMS USED FOR ADVANCED WARNING ON VEHICLES LOCATED ON THE SHOULDER MAY BE SMALLER THAN 43" X 73". THE DISPLAY PANEL SHALL HAVE THE CAPABILITY TO PROVIDE 2 MESSAGE LINES WITH 7 CHARACTERS PER LINE WITH A MINIMUM CHARACTER HEIGHT OF 18". FOR ADDITIONAL MESSAGING, CONTACT THE WORK ZONE TRAFFIC CONTROL SECTION.

TIP #: C-5553
Date: 05-29-2013

Rowan County

Law Enforcement:
(05/14/2013)

Description

Furnish Law Enforcement Officers and marked Law Enforcement vehicles to control traffic in lane closures and direct traffic through intersections in accordance with the contract.

Construction Methods

Use uniformed Law Enforcement Officers and marked Law Enforcement vehicles equipped with blue lights mounted on top of the vehicle, and Law Enforcement vehicle emblems to direct or control traffic as required by the plans or by the Engineer.

Measurement and Payment

Law Enforcement will be measured and paid for in the actual number of hours that each Law Enforcement Officer is provided during the life of the project as approved by the Engineer. There will be no direct payment for marked Law Enforcement vehicles as they are considered incidental to the pay item.

Payment will be made under:

Pay Item	**Pay Unit**
Law Enforcement	Hour

NORTH CAROLINA PROFESSIONAL SEAL 35496 ENGINEER BENJAMIN PAUL SCHOENBAUER

Ben Schoenbauer
July 29, 2013

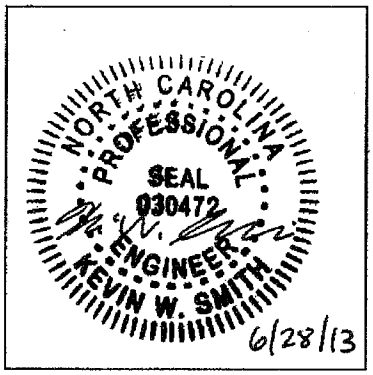

FINAL
Project Special Provisions
(Version 12.1)
Signals and Intelligent Transportation Systems

Prepared By: KWS
28-Jun-13

Contents

1. GENERAL REQUIREMENTS **9**
1.1. DESCRIPTION 9
A. General *9*
B. Standard Specifications *9*
1.2. MATERIAL 10
A. Qualified Products *10*
B. Submittal Requirements *10*
C. Observation Period *11*
D. Warranties *11*
E. Firmware Licensing and Upgrades *11*
F. Plan of Record Documentation *12*
G. Wire and Cable *12*
H. Electrical Service *12*
I. Painting *13*
J. Performance of Warranty Repair and Maintenance *13*
1.3. CONSTRUCTION METHODS 13
A. General *13*
B. Regulations and Codes *14*
C. Utility Services *14*
D. Maintenance and Repair of Material *14*
E. Inspections *15*
F. Removal of Existing Equipment and Material *15*
G. Railroad Preemption *15*
H. Vehicle Preemption Systems *16*
I. Timing of Signals *16*
J. Wire and Cable *16*
K. Electrical Service and Grounding *16*
L. Electrical Bonding *18*
M. Traffic Signal Activation *18*
N. Contractor's Office *18*
O. Requirements for Historic Areas *18*
P. Related Projects *19*
Q. Sequence of Construction *20*
R. Training *20*
1.4. MEASUREMENT AND PAYMENT 20

2. MOBILIZATION **21**
2.1. DESCRIPTION 21
2.2. MEASUREMENT AND PAYMENT 21

3. SIGNAL HEADS **22**

3.1. DESCRIPTION 22
3.2. MATERIAL 22
A. General *22*
B. Vehicle Signal Heads *23*
C. Pedestrian Signal Heads *25*
D. Signal Cable *27*
3.3. CONSTRUCTION METHODS 27
A. General *27*
B. Vehicle Signal Heads *28*
C. Pedestrian Signal Heads *29*
3.4. MEASUREMENT AND PAYMENT 29

4. UNDERGROUND CABLE INSTALLATION 31
4.1. DESCRIPTION 31
4.2. MATERIAL 31
A. General *31*
B. Conduit *31*
C. Duct And Conduit Sealer *34*
4.3. CONSTRUCTION METHODS 34
A. General *34*
B. Trenching *35*
C. Directional Drilling *36*
4.4. MEASUREMENT AND PAYMENT 38

5. JUNCTION BOXES 39
5.1. DESCRIPTION 39
5.2. MATERIAL 39
A. General *39*
B. Polymer Concrete (PC) Junction Boxes *39*
C. Standard Size Junction Boxes *39*
D. Oversized Junction Boxes *39*
5.3. CONSTRUCTION METHODS 39
5.4. MEASUREMENT AND PAYMENT 40

6. WOOD POLES 42
6.1. DESCRIPTION 42
6.2. MATERIAL 42
A. General *42*
B. Treated Timber and Lumber *42*
C. Preservative Treatment *42*
D. Wire and Cable *43*
E. Grounding Electrodes *43*
6.3. CONSTRUCTION METHODS 43
6.4. MEASUREMENT AND PAYMENT 44

7. RISER ASSEMBLIES 45
7.1. DESCRIPTION 45
7.2. MATERIAL 45
A. General *45*
B. Rigid Metallic Conduit *45*
C. Riser Sealing Devices *45*
D. Pole Line Hardware *45*
E. Wire and Cable *46*
F. Grounding Electrodes *46*
7.3. CONSTRUCTION METHODS 47
7.4. MEASUREMENT AND PAYMENT 48

8. ELECTRICAL SERVICE 49

8.1. DESCRIPTION 49
8.2. MATERIAL 49
A. Electrical Service *49*
B. Grounding Electrodes *49*
8.3. CONSTRUCTION METHODS 50
A. Utility Services *50*
B. New Electrical Service *50*
C. Modify Existing Electrical Service *50*
D. Grounding of Electrical Services *50*
8.4. MEASUREMENT AND PAYMENT 51

9. ELECTRICAL SERVICE AND CABINET FOUNDATIONS FOR DOWNTOWN TRAFFIC SIGNALS ..52
9.1. DESCRIPTION 52
9.2. INTEGRATED BASE ADAPTER 52
A. Description *52*
B. Materials *53*
C. Construction Methods *53*
9.3. ELECTRICAL SERVICE 53
A. Description *53*
B. Materials *53*
C. Construction Methods *54*
9.4. OVERVIEW OF WORK BY LOCATION 55
9.5. MEASUREMENT AND PAYMENT 58

10. TERMINAL SPLICE BOX 59
10.1. DESCRIPTION 59
10.2. MATERIAL 59
10.3. CONSTRUCTION METHODS 59
10.4. MEASUREMENT AND PAYMENT 60

11. LEAD-IN CABLE 61
11.1. DESCRIPTION 61
11.2. MATERIAL 61
11.3. CONSTRUCTION METHODS 61
11.4. MEASUREMENT AND PAYMENT 61

12. ETHERNET CABLE 62
12.1. DESCRIPTION 62
12.2. MATERIAL 62
12.3. CONSTRUCTION METHODS 63
A. General *63*
B. Underground Installation *63*
12.4. MEASUREMENT AND PAYMENT 63

13. FIBER-OPTIC CABLE 64
13.1. DESCRIPTION 64
13.2. MATERIAL 64
A. General *64*
B. SMFO Communications Cable *64*
C. Drop Cable *65*
D. Communications Cable Identification Markers *65*
E. Fiber-Optic Cable Storage Guides *66*
F. Pole Line Hardware *66*
13.3. CONSTRUCTION METHODS 67
A. General *67*
B. Aerial Installation *68*
C. Underground Installation *68*
D. Installation of Drop Cable Assembly *68*

13.4. MEASUREMENT AND PAYMENT 69

14. FIBER-OPTIC SPLICE CENTERS 70
14.1. DESCRIPTION 70
14.2. MATERIAL 70
A. General 70
B. Interconnect Center 70
C. Splice Enclosure 70
14.3. CONSTRUCTION METHODS 71
A. General 71
B. Workmanship 71
C. Termination and Splicing within Interconnect Center 72
D. Termination and Splicing within Splice Enclosure 72
E. Modify Interconnect Center and Splice Enclosure 73
F. Testing 73
14.4. MEASUREMENT AND PAYMENT 73

15. DELINEATOR MARKERS 75
15.1. DESCRIPTION 75
15.2. MATERIAL 75
A. General 75
B. Delineator Markers 75
15.3. CONSTRUCTION METHODS 75
15.4. MEASUREMENT AND PAYMENT 76

16. LOCAL AREA NETWORK 77
16.1. DESCRIPTION 77
16.2. MATERIAL 77
A. General 77
B. Network Performance Management Software 77
C. Field Ethernet Switch 78
D. Core Ethernet Switch 80
E. Network Ethernet Switch 83
F. VPN Firewall 83
G. Cable 84
16.3. CONSTRUCTION METHODS 84
A. General 84
B. Requirements Definition Document 84
C. LAN Integration 85
D. Field Ethernet Switches 85
E. Core Ethernet Switch 86
F. Network Ethernet Switch 86
G. VPN Firewall 86
16.4. MEASUREMENT AND PAYMENT 86

17. SPREAD SPECTRUM WIRELESS ETHERNET RADIO 88
17.1. DESCRIPTION 88
17.2. MATERIAL 88
A. General 88
B. 900 MHz Wireless Radio 88
C. Software 90
D. Directional Antenna (Yagi) 90
E. Omnidirectional Antenna 92
F. Antenna Mounting Hardware Kit 92
G. Coaxial Cable 93
H. Standard N-Type Male Connector 93
I. Coaxial Cable Shield Grounding and Weatherproofing Kits 94

J. Lightning Arrestor *94*
K. Coaxial cable – Power Divider (Splitter) *95*
L. Disconnect Switch *95*
M. Warning Signs and Decal *96*
17.3. CONSTRUCTION METHODS 96
A. General *96*
B. Disconnect Switch *96*
C. Warning Signs and Decals *97*
17.4. MEASUREMENT AND PAYMENT 97

18. SIGNS INSTALLED FOR SIGNALS 98
18.1. DESCRIPTION 98
18.2. MATERIAL 98
A. General *98*
B. Signs and Hardware *98*
C. Retroreflective Sheeting *99*
D. CERTIFICATION *102*
18.3. CONSTRUCTION METHODS 102
18.4. MEASUREMENT AND PAYMENT 103

19. SIGNAL CABINET FOUNDATIONS 104
19.1. DESCRIPTION 104
19.2. MATERIAL 104
A. General *104*
B. Signal Cabinet Foundations *104*
19.3. CONSTRUCTION METHODS 104
19.4. MEASUREMENT AND PAYMENT 105

20. MODIFY CABINET FOUNDATIONS 107
20.1. DESCRIPTION 107
20.2. MATERIAL 107
20.3. CONSTRUCTION METHODS 107
A. Install Conduit Entrance into Existing Foundation *107*
B. Modify Foundation *107*
20.4. MEASUREMENT AND PAYMENT 108

21. CONTROLLERS WITH CABINETS 109
21.1. DESCRIPTION 109
21.2. MATERIAL 109
A. General *109*
B. Type 2070L Controllers *109*
C. General Cabinets *109*
D. Type 170E Cabinets *110*
E. Type 170 Detector Sensor Units *128*
21.3. CONSTRUCTION METHODS 128
A. General *128*
B. System Interconnection *129*
C. Workshop *129*
21.4. MEASUREMENT AND PAYMENT 130

22. CABINET BASE ADAPTER/EXTENDER 131
22.1. DESCRIPTION 131
22.2. MATERIAL 131
22.3. CONSTRUCTION METHODS 131
22.4. MEASUREMENT AND PAYMENT 131

23. CCTV FIELD EQUIPMENT 133
23.1. DESCRIPTION 133

23.2. MATERIAL 133
A. General *133*
B. Digital Camera *133*
C. CCTV Test Panel *136*
D. CCTV Composite Cable *137*
E. CCTV Camera Attachment to Pole *137*
F. Surge Suppression *137*
G. Pole Mounted CCTV Cabinet *137*
23.3. CONSTRUCTION METHODS 137
A. General *137*
B. Electrical and Mechanical Requirements *138*
C. Pole Mounted CCTV Equipment Cabinet *138*
23.4. MEASUREMENT AND PAYMENT 138

24. SYSTEM SOFTWARE 139
24.1. DESCRIPTION 139
24.2. MATERIAL 139
A. General *139*
B. Distributed Processing Signal System Software *141*
C. CCTV System Software *156*
D. System Support Software *159*
24.3. CONSTRUCTION METHODS 160
A. General *160*
B. Distributed Processing Signal System Software *161*
C. Local Controller Software *161*
D. CCTV System Software *162*
E. System Support Software *162*
24.4. DOCUMENTATION 162
24.5. MEASUREMENT AND PAYMENT 163

25. COMPUTER HARDWARE 165
25.1. DESCRIPTION 165
25.2. MATERIAL 165
A. General *165*
B. Surge Suppression Strips *165*
C. Applications Servers *165*
D. Keyboard Video Mouse Switch *168*
E. Computer Workstations *168*
F. Notebook Computers *169*
G. Printer *170*
H. Equipment Rack Cabinet *171*
25.3. CONSTRUCTION METHODS 171
A. General *171*
B. Surge Suppression Strips *172*
C. Applications Servers *172*
D. Keyboard Video Mouse Switch *172*
E. Computer Workstations *173*
F. Notebook Computers *173*
G. Printer *173*
H. Equipment Rack Cabinet *173*
I. Computer Hardware Integration *173*
25.4. MEASUREMENT AND PAYMENT 174

26. CENTRAL VIDEO SYSTEM 175
26.1. DESCRIPTION 175
26.2. MATERIAL 175
A. General *175*

B. CCTV Control Panel *175*
C. Video Monitor Processor Unit *176*
D. LCD Video Monitors *176*
26.3. CONSTRUCTION METHODS 178
A. General *178*
B. Video Display *178*
C. CCTV Control Panel *178*
D. Video Monitor Processor Unit *178*
E. LCD Video Monitor *178*
26.4. MEASUREMENT AND PAYMENT 178

27. SYSTEM SUPPORT EQUIPMENT 180
27.1. DESCRIPTION 180
A. General *180*
B. Signal System Support Equipment *180*
C. Communication System Support Equipment *180*
D. CCTV System Support Equipment *181*
27.2. MATERIAL 181
A. General: *181*
B. Signal System Support Equipment *181*
C. CCTV System Support Equipment *185*
27.3. MEASUREMENT AND PAYMENT 186

28. TESTING AND ACCEPTANCE 189
28.1. DESCRIPTION 189
28.2. INTERSECTION OPERATIONAL TESTS 189
28.3. SYSTEM OPERATIONAL TEST 189
28.4. OBSERVATION PERIOD 190
28.5. FINAL ACCEPTANCE 191
28.6. MEASUREMENT AND PAYMENT 191

29. TRAINING 192
29.1. DESCRIPTION 192
29.2. MATERIAL 192
A. General *192*
B. Subject Areas *192*
C. Required Content and Format *193*
29.3. MEASUREMENT AND PAYMENT 198

30. TEMPORARY TRAFFIC CONTROL 199
30.1. DESCRIPTION 199
30.2. GENERAL REQUIREMENTS 199
A. Maintenance of Traffic *199*
B. Temporary Lane Closures *199*
C. Traffic Stoppage *200*
D. Traffic Control Supervision *200*
E. Vehicular Access *200*
F. Pedestrian Access *200*
G. Alternate to Transportation Management Plan *201*
H. Temporary Traffic Control Plan Not Fully Covered in the Contract *201*
30.3. MATERIALS 201
A. Work Zone Traffic Control Devices *201*
B. Work Zone Signs *201*
C. Flashing Arrow Boards *202*
D. Portable Changeable Message Signs *202*
E. Drums *202*
F. Cones *202*

G. Barricades *202*
H. Flaggers *203*
I. Truck Mounted Attenuators *203*
J. Skinny Drums *203*
30.4. CONSTRUCTION METHODS 203
A. Work Zone Traffic Control Devices *203*
B. Work Zone Signs *203*
C. Flashing Arrow Boards *204*
D. Portable Changeable Message Signs *204*
E. Drums *205*
F. Cones *205*
G. Barricades *205*
H. Flaggers *206*
I. Truck Mounted Attenuator *206*
J. Skinny Drums *206*
K. Law Enforcement *207*
L. Pedestrian Safety *207*
30.5. MAINTENANCE AND INSPECTION 207
A. Work Zone Traffic Control Devices *207*
30.6. FAILURE TO MAINTAIN TRAFFIC CONTROL 208
30.7. MEASUREMENT AND PAYMENT 208

1. GENERAL REQUIREMENTS

1.1. DESCRIPTION

A. General

Furnish, install, and fully integrate new and existing traffic signal controllers and cabinets, existing fiber optic communications cable, new wireless radio communications links, new closed-circuit television camera units and control cabinets, new central hardware and software, and new traffic operations center to form a complete and operational central distributed processing traffic signal system for the City of Salisbury in North Carolina.

Furnish, install, and fully integrate new 2070L traffic signal controllers and new model 332 and 336 style cabinets to replace existing controllers and cabinets at locations shown in the Plans. Fully integrate existing 2070L traffic signal controllers with signal system.

Fully integrate existing fiber optic communications cable for traffic signal system as shown on the Plans by preserving the existing communications architecture and topology. Integrate signal controllers with existing fiber optic communications network. Where shown in the plans, integrate signal controllers using new wireless radio communications.

Furnish and install new closed-circuit television (CCTV) camera assemblies at locations shown in the Plans. Fully integrate camera assemblies with the fiber optic communications network.

Complete and fully integrate a new traffic operations center (TOC) to be housed at the City Administration Building located at 132 North Main Street in Salisbury as shown in the Plans. Install and integrate all central servers and network equipment with the existing termination of all fiber optic communications cables at the City Customer Service Center located at 1415 South Martin Luther King, Jr. Boulevard in Salisbury as shown in the Plans.

Complete and fully integrate a remote client version of the traffic signal system central software at the NCDOT Division 9 Traffic Operations Office located at 375 Silas Creek Parkway in Winston-Salem using a standard internet connection.

Complete and fully integrate video sharing functionality between the City and the NCDOT Triad Regional Transportation Management Center (TRTMC) located at 201 South Chimney Rock Road in Greensboro. Integrate with new internet connection and fully comply with the existing regional video sharing architecture.

Contact Engineer prior to entering any building. Coordinate and obtain approval from Engineer regarding allowable working time in buildings.

B. Standard Specifications

Conform to these Project Special Provisions, the Plans, and the NCDOT 2012 Standard Specifications for Roads and Structures (also referred to as the "Standard Specifications"). Also conform to the regulations and codes described in Section 1700 of the Standard Specifications.

In the event of a conflict between these Project Special Provisions and the Standard Specifications, these Project Special Provisions shall govern.

1.2. MATERIAL

A. Qualified Products

Furnish new equipment, materials, and hardware unless otherwise required. Inscribe manufacturer's name, model number, serial number and any additional information needed for proper identification on each piece of equipment housed in a case or housing.

ITS and Signals Qualified Products List (QPL) is available on the Department's website.

https://connect.ncdot.gov/resources/safety/Pages/ITS-and-Signals-Qualified-Products.aspx

Certain signal and communications equipment, material and hardware shall be pre-approved on the QPL by the date of installation. Equipment, material and hardware not pre-approved when required will not be allowed for use on the project. Consult the QPL web site to obtain pre-approval procedures.

B. Submittal Requirements

Furnish a Type 3 material certification in accordance with Article 106-3 of the Standard Specifications. When requested by the Department, provide additional certifications from independent testing laboratories and sufficient data to verify item meets applicable Specifications. Ensure additional certification states the testing laboratory is independent of the material manufacturer and neither the laboratory nor the manufacturer has a vested interest in the other.

Identify all proprietary parts in Contractor-furnished material. The Department reserves the right to reject material that uses proprietary components not commercially available through electronic supply houses.

For Contractor-furnished material listed on the QPL, furnish submittals in the format defined by the QPL.

For Contractor-furnished material not on the QPL, furnish 3 copies of the equipment list including 3 copies of catalog cuts. Identify proposed material on catalog cuts by a reproducible means (highlighter pen does not transfer to copies). Ensure material lists contain material description, brand name, manufacturer's address and telephone number, stock number, size, identifying trademark or symbol and other appropriate ratings.

Allow forty (40) calendar days for Department's review of each submittal.

Do not fabricate or order material until receipt of the Engineer's approval.

Submittal data for the items in each of the following groups shall be submitted as an integrated unit:

Group A – Signal Equipment,

Group B – Central System and Local Controller Software,

Group C – Cabinet and Controller Equipment (including cabinet prototypes),

Group D – Fiber Optic Cable and Splicing Equipment,

Group E –LAN Equipment,

Group F – Computer Hardware,

Group G –CCTV Camera Assemblies,

Group H – Central Video System (hardware and software), and

Group I – System Support Equipment and Test Equipment.

C. Observation Period

Prior to final acceptance, all Contractor-furnished equipment and software shall successfully complete a 60-day Observation Period.

The 60-day Observation Period is considered to be part of the work included in the total contract time and must be completed prior to final acceptance of the project.

Final acceptance will occur following the successful completion of the 60-day Observation Period and after all documentation requirements have been fully satisfied.

Refer to Section 28 "Testing and Acceptance" of these Project Special Provisions for additional requirements.

D. Warranties

Unless otherwise required herein, provide manufacturer's warranties on Contractor furnished equipment for material and workmanship that are customarily issued by the equipment manufacturer and that are at least 1 year in length from successful completion of the 60-day observation period. Include unconditional coverage for all parts and labor necessary or incidental to repair of defective equipment or workmanship and malfunctions that arise during warranty period.

Ensure all contractor-furnished equipment, including pieces and components of equipment, hardware, firmware, software, middleware, internal components and subroutines, which perform any date or time data recognition function, calculation or sequencing will support a four digit year format for at least 50 years.

Upon successful completion of the 60-day observation period, transfer manufacturer's warranties with proper validation by the manufacturer to the Department or its designated maintaining agency.

E. Firmware Licensing and Upgrades

Provide the Department and City of Salisbury with a license to duplicate all programmable devices in equipment for maintenance and software upgrades. Provide binary or hexadecimal format files for each device that may be programmed by the Department and City of Salisbury. Ensure files are provided on PC compatible compact discs or other approved media.

Ensure firmware performance upgrades that occur during the contract period are available to the Department and City of Salisbury at no additional cost.

Make firmware upgrades that are developed to correct operating characteristics available to the Department and City of Salisbury at no additional cost until the warranty period expires.

F. Plan of Record Documentation

Before final acceptance, furnish plan of record documentation of all fieldwork. Plan of record documentation will be subject to approval before final acceptance. Store documentation in a manila envelope placed in a weatherproof holder mounted within each cabinet or housing for easy access.

Except for standard bound manuals, bind all 8 1/2" x 11" documentation, including 11" x 17" drawings folded to 8 1/2" x 11", in logical groupings in either 3-ring or plastic slide-ring loose-leaf binders. Permanently label each grouping of documentation.

Provide manual, electrical schematic diagram, and cabinet wiring diagram for each control equipment cabinet and piece of equipment in cabinet. Place manuals and prints in weatherproof holder. For wiring diagrams and electrical schematic diagrams not bound into printed manuals, provide copies at least 22" x 34". Provide one electronic copy (on CD or DVD) of each manual provided. Installation, Operations, and Training Manuals for all Contractor-provided software shall also be provided in both hard copy and electronic formats.

Provide Operator's Manuals containing detailed operating instructions for each different type or model of equipment. Ensure manuals contain instructions for possible modification to equipment.

Provide maintenance procedures manuals containing detailed preventive and corrective maintenance procedures for each different type or model of equipment.

Provide detailed wiring diagrams that include interconnection of equipment with pin-out configurations, pin functions, and cable part numbers. Provide 2 copies of system connection diagrams showing system interconnection cables and associated terminations.

G. Wire and Cable

Furnish wire and cable on reels. When requested by the Department, furnish samples of wire and cable to the Department at no additional cost.

H. Electrical Service

Furnish external electrical service disconnects with single pole 50 A inverse time circuit breaker with at least 10,000 RMS symmetrical amperes short circuit current rating in a lockable NEMA 3R enclosure. Ensure service disconnects are listed as meeting UL Standard UL-489 and marked as being suitable for use as service equipment. Fabricate enclosure from galvanized steel and electrostatically apply dry powder paint finish, light gray in color, to yield a minimum thickness of 2.4 mils. Provide ground bus and neutral bus with at least 4 terminals with minimum wire capacity range of number 14 through number 4.

Furnish NEMA Type 3R meter base rated 100 A minimum that meets the requirements of the local utility. Provide meter base with ampere rating of meter sockets based on sockets being wired with insulated wire rated at least 167°F.

Furnish 4 terminal, 600 volt, single phase, 3 wire meter base with the following:

1) Line, Load and Neutral Terminals accept #8 to 2/0 AWG Copper/Aluminum wire,
2) Ringed or Ringless Type, with or without bypass,
3) Made of galvanized steel,

4) Listed as meeting UL Standard UL-414, and

5) Overhead or underground service entrance as specified.

Ensure meter bases have electrostatically applied dry powder paint finish, light gray in color, with minimum thickness of 2.4 mils.

Furnish 1" watertight hub for threaded rigid conduit with meter base.

If meter base and electrical service disconnect are supplied in the same enclosure, ensure assembly is marked as being suitable for use as service equipment. Ensure combination meter and disconnect mounted in a pedestal for underground service is listed as meeting UL Standard 231. Otherwise, ensure combination meter and disconnect is listed as meeting UL Standard 67.

I. Painting

Where painting of signal equipment cabinets, signal heads, signal poles, and pedestals is required, apply paint at the factory. No field painting will be allowed except when paint has been scratched or marred. In such cases, apply 2 field coats of the same color and grade enamel as the original paint to the scratched or marred portions.

J. Performance of Warranty Repair and Maintenance

Provide authorization to the City of Salisbury to perform all warranty repairs after project acceptance. The decision to perform warranty work at a City facility by City technicians or to have warranty work performed by the vendor shall be at the discretion of the City of Salisbury. Provide any training required by the manufacturer to authorize the City of Salisbury to perform warranty work and ensure manufacturer will furnish parts to the City of Salisbury for all warranty repairs at no cost to the City. In addition, ensure the manufacturer agrees to provide prompt technical support to the City of Salisbury technicians for a period of one year after the end of the warranty period at no cost to the City. Defective parts replaced under warranty by the City of Salisbury will be returned to the vendor at the vendor's request. Provide schematics, part lists, and other documentation to perform bench repair to the City of Salisbury within 2 weeks upon request. The City agrees not to divulge any proprietary information in the schematics, part lists and other documentation upon request from the vendor. After project acceptance and at the request of the City, manufacturer shall perform warranty repairs to equipment which fails during the warranty period at no cost to the City including freight costs to ship repaired equipment back to the City of Salisbury. Ensure all equipment is repaired and returned to the City of Salisbury within 21 calendar days of receipt by the manufacturer.

1.3. CONSTRUCTION METHODS

A. General

Before beginning signal work, verify all existing signal equipment is in satisfactory working order. Report all defective signal equipment to the Engineer so as not to be held responsible for defects.

Locate existing conduit, cable runs, inductive detection loops, lead-in cable, junction boxes and detection equipment before installing or using equipment that can damage or interfere with such facilities. The locations of existing inductive detection loops shown are approximate.

Locate all underground utilities before beginning drilling, digging or trenching operations.

Ensure that an IMSA certified, or equivalent, Level II traffic qualified signal technician is standing by to provide supervision and emergency maintenance services whenever work is being performed on traffic signal controller cabinets and traffic signal controller cabinet foundations. Stand by status is defined as being able to arrive, fully equipped, at the work site within 30 minutes ready to provide services.

Immediately cease work and notify the Engineer and affected owners if damage to existing utilities, cables or equipment occurs. Make all required repairs and replacements.

B. Regulations and Codes

Comply with NCGS § 87, Article 4, Electrical Contractors. Comply with all regulations and codes imposed by the owner of affected utility poles.

Notify the Engineer, local traffic enforcement agency, local utility company and affected railroad companies 7 business days before operational shutdowns to coordinate connection or disconnection to an existing utility or system.

Install standoffs, meter bases and service disconnects as required by the NESC, NEC, local utility companies and local ordinances.

C. Utility Services

Coordinate all work to ensure electrical power of proper voltage, phase, frequency and ampacity is available to complete the work. Use electrical services cables with THWN insulation.

When electrical, telephone and telecommunication service is not furnished by the Department or City and is required, contact the utility company and make application to ensure all work can be completed. Obtain authorization for service in the Department's name and make application for service in the Department's name along with the associated NCDOT Asset Inventory Number shown in the contract. Notify the Engineer immediately if this number is not shown in the contract.

The Department and City of Salisbury will be responsible for direct payment of monthly utility company usage charges. The Contractor will be responsible for all expenses associated with utility installation costs, hookups, etc.

D. Maintenance and Repair of Material

Furnish the Engineer with the name, office telephone number, cellular (mobile) telephone number and pager number of the supervisory employee who will be responsible for maintenance and repair of equipment during all hours.

Maintain and repair all signal and communications related equipment within the project construction limits until completion of the observation period and receipt of written notification of final acceptance of the project.

For all failures, malfunctions or damages to equipment, begin necessary repairs within 4 hours of notification. Complete repairs within 8 hours of notification. Comply with Section 150 of the Standard Specifications for maintenance of traffic flow. The inability to contact the supervisory employee or prearranged alternate will not extend repair time requirements.

Remove and replace all signal and communications related equipment that fails. The Department will furnish the Contractor replacement equipment for Department-furnished equipment that fails.

Except for damages and malfunctions caused by the Contractor's work activities, the Contractor will not be held responsible for pre-existing conditions reported to the Engineer before starting traffic signal work at the specific intersection. The Contractor will assume responsibility for all maintenance and emergency services necessary once traffic signal work has begun at the specific intersection and for all damages and malfunctions caused either directly or indirectly by the Contractor's work activities.

Perform maintenance (testing) on all Traffic Signal Conflict Monitors every 12 months for the life of the project beginning with the initial test and every 12 months thereafter. Provide the initial test date via the manufacturer's certification or via testing prior to installation of the conflict monitor at an intersection. Use the ATSI Incorporated Model PCMT-2600 Conflict Monitor Tester or an Engineer approved equivalent. Ensure that the Conflict Monitor Tester is maintained and calibrated per the manufacturer's recommendation. Provide to the Engineer a copy of the manufacturer's certification that the Conflict Monitor Tester is in proper working order before testing the Traffic Signal Conflict Monitors. Perform the test on the Traffic Signal Conflict Monitors per the manufacturer's recommendation. For each Traffic Signal Conflict Monitor tested, provide 2 dated copies of the test results: one copy for the Engineer and one copy for the traffic signal cabinet.

In the event the Contractor fails to perform in accordance with the Plans and Project Special Provisions within the time frame specified, the Department and City of Salisbury reserves the right to perform maintenance and emergency service necessary to ensure continuous traffic signal operation. Further, all expenses incurred by the Department and City of Salisbury in implementing this option will be deducted from payment due the Contractor, plus $2,500 liquidated damage per occasion, per day, or any portion thereof, until corrected.

E. Inspections

The Department and City of Salisbury may access the Contractor's equipment to perform railroad, signal and preventative maintenance inspections or conflict monitor certification as necessary. The Contractor shall be present for these inspections.

F. Removal of Existing Equipment and Material

Remove all Department-owned signals and communications related equipment and material that will not be used. Assume ownership of removed poles, messenger cable, interconnect cable, communications cable and supporting hardware. Return all other equipment and material between 8:00 a.m. and 12:00 p.m., Monday through Thursday, to the Division 9 Traffic Services Office located at 350 Craft Drive in Winston-Salem.

Remove all City of Salisbury owned signals and communications related equipment and material that will not be used. Assume ownership of removed poles, messenger cable, interconnect cable, communications cable and supporting hardware. Return all other equipment and material between 8:00 a.m. and 12:00 p.m., Monday through Thursday, to the City Customer Service Center located at 1415 South Martin Luther King, Jr. Boulevard in Salisbury.

G. Railroad Preemption

Where railroad preemption is required, coordinate all work with the railroad company. Do not place signals into operation until signal equipment has been interconnected with required railroad-highway crossing devices and railroad preemption is working properly. Ensure preemption sequences begin immediately after activation of train detection.

Contact and coordinate with the railroad company to schedule interconnection of the signal to the railroad controller cabinet. Install lead-in cable from the signal controller cabinet to a railroad company furnished and installed lockable junction box. Interconnection will be made by the railroad company.

Provide fail-safe operation such that removal of voltage from the railroad side of the isolation relay will initiate the railroad preemption sequence.

H. Vehicle Preemption Systems

Where required, implement and install vehicle preemption systems. Coordinate vehicle preemption work with the proper operating authority. Contact the proper operating authority and schedule installation of preemption equipment.

Where required, preserve the existing emergency vehicle preemption systems functionality during signal cabinet change-outs or other cabinet modifications by reusing and/or providing all necessary equipment and hardware. This work shall be considered incidental to the installation of new signal cabinets.

I. Timing of Signals

Implement timing values for signal controllers. Extract all parameters necessary to implement coordinated signal operations from the existing controllers. Make any modifications to the cycle, split, and offset information extracted from the existing controllers that are necessary to implement the timing plans into the new 2070 controllers and system database. The Engineer may, at his/her option, observe the loading of the timing plans.

Reinstall all existing time-based coordination. As directed, make modifications to existing coordination to account for changes in signal phasing.

The Department and City of Salisbury reserves the right to make or have the Contractor make, field timing changes necessary for pattern optimization and to eliminate identifiable, potential hazards to the motoring public. The Engineer will notify the Contractor of timing changes made.

J. Wire and Cable

For installation in a conduit system, lubricate cable and wires before installing in conduit. Use lubricant that will not physically or chemically harm cable jacket, wire insulation or conduit.

Terminate all electrical wire and cable at recessed-screw or barrier type terminal blocks. Unless specifically allowed, connect no more than 2 conductors to the same terminal screw.

Splice electrical wire and cable in junction boxes or condulets. Maintain color coding of wires throughout each splice.

Protect ends of wire and cable from water and moisture.

K. Electrical Service and Grounding

Where electrical services do not include an external electrical service disconnect, modify service to include electrical service disconnect and a new grounding electrode system.

Provide a grounding electrode system at all new electrical services. In addition to NEC requirements, test grounding electrode resistance for a maximum of 20 ohms. Furnish and install additional ground rods to grounding electrode system as necessary to meet test requirements.

Modify existing electrical services, as necessary, to meet the grounding requirements of the NEC, these Project Special Provisions, the Standard Specifications and the project Plans. Remove any ground rods in the cabinet foundation and install a new grounding electrode system. Cut off abandoned ground rods in the cabinet foundation flush with the foundation surface. Where a grounding electrode system is connected to the electrical service in accordance with the NEC, test grounding electrode resistance for a maximum of 20 ohms. Grounding electrode resistance test shall be verified or witnessed by the Engineer or the Engineer's designated representative. Furnish and install additional ground rods to grounding electrode system as necessary to meet the Project Special Provisions and Standard Specifications and test requirements.

Follow test equipment's procedures for measuring grounding electrode resistance. When using clamp-type ground resistance meters, readings of less than one ohm typically indicate a ground loop. Rework bonding and grounding circuits as necessary to remove ground loop circuits and retest. If a ground loop cannot be identified and removed to allow the proper use of a clamp-type ground resistance meter, use the three-point test method.

Submit a completed Inductive Loop & Grounding Test Form available on the Department's website.

https://connect.ncdot.gov/resources/safety/Pages/ITS-and-Signals.aspx

Provide a length of marker tape 6" to 12" below finished grade directly over grounding electrodes and conductors.

Provide real world coordinates for all ground rods installed or used under this project. Provide the coordinates in feet units using the North Carolina State Plane coordinate system (1983 North American Datum also known as NAD '83). Furnish coordinates that do not deviate more than 1.7 ft in the horizontal plane and 3.3 ft in the vertical plane. Global positioning system (GPS) equipment able to obtain the coordinate data within these tolerances may be used. Submit cut sheets on the GPS unit proposed to collect the data for approval by the Engineer.

Provide both a digital copy and hard copy of all information regarding the location in the Microsoft® spreadsheet provided by the Department, shown by example in the figure below.

NCDOT Inv #	Name	Location	Latitude	Longitude	Manufacturer	Model #
05-0134	Equipment Cabinet	US 70 at Raynor Rd./ Auburn-Knightdale	-78.5500	35.6873	McCain	Type-332
05-0134	Junction Box # 1 (Phase 2 Side)	US 70 at Raynor Rd./ Auburn-Knightdale	-78.5516	35.6879	Quazite	PG1118BA12(Box) PG118HA00(Cover)
05-0134	Junction Box # 2 (Phase 2 Side)	US 70 at Raynor Rd./ Auburn-Knightdale	-78.5506	35.6876	Quazite	PG1118BA12(Box) PG118HA00(Cover)
05-0134	Junction Box # 3 (Near Cabinet)	US 70 at Raynor Rd./ Auburn-Knightdale	-78.5501	35.6873	Quazite	PG1118BA12(Box) PG118HA00(Cover)
05-0134	Junction Box # 4 (Phase 6 Side)	US 70 at Raynor Rd./ Auburn-Knightdale	-78.5486	35.6873	Quazite	PG1118BA12(Box) PG118HA00(Cover)
05-0134	Junction Box # 5 (Phase 6 Side)	US 70 at Raynor Rd./ Auburn-Knightdale	-78.5493	35.6876	Quazite	PG1118BA12(Box) PG118HA00(Cover)
05-0134	Junction Box # 6 (Phase 4 Side)	US 70 at Raynor Rd./ Auburn-Knightdale	-78.5503	35.6879	Quazite	PG1118BA12(Box) PG118HA00(Cover)

Submit coordinate information in a spreadsheet provided by the Department and in accordance with this article.

L. Electrical Bonding

Using an approved termination means, connect a #14 AWG minimum, 19-strand copper conductor (Type THWN) with green insulation to serve as an equipment grounding conductor to metal poles, vehicular and pedestrian signal pedestals and other metallic components. Use messenger cables on wood poles and metal strain poles to provide effective ground fault current path to cabinet ground.

M. Traffic Signal Activation

Do not place signal in steady (stop-and-go) mode until inspected and authorized by the Engineer.

N. Contractor's Office

Throughout the project until final acceptance, the Contractor shall maintain full-time staffed office with storage and testing facilities within the Salisbury City Limits.

O. Requirements for Historic Areas

As shown in the Plans, some work will be conducted within areas determined to contain properties with documented historic significance. If it is necessary to deviate from the Plans in these areas, alert the Engineer to contact Project Development And Environmental Analysis Branch-Historic Architecture Group of the North Carolina Department of Transportation for an effects determination before proceeding.

Avoid damaging or removing sidewalks and curbs within designated historic districts whenever possible. Do not damage, disturb, or remove any existing granite curbs. Where granite curbs conflict with the installation of underground conduit and cable, bore (drill) conduit underneath granite curb. Do not bore through granite curbs. Replace any granite curb damaged due to construction of this project at no cost to the Department.

Where removal and replacement of concrete sidewalk and concrete curb is unavoidable, replace them with concrete materials that match the finish, appearance, and color of the adjacent existing sidewalk as close as technically feasible as determined by the Engineer. Finishes may include, but are not limited to, water-washed, broom, and trowel. The dimensions and the profile (i.e. shape) of the new curbing shall match that of the adjacent existing curbing.

Where removal and replacement of sidewalk constructed of materials other than concrete is unavoidable, replace the sidewalk with in-kind materials that match the finish, appearance, and color of the adjacent existing sidewalk as close as technically feasible as determined by the Engineer. If the sidewalk is constructed of materials such as brick, stone, or pavers, carefully remove and subsequently reinstall the bricks, stones, or pavers using methods approved by the Engineer. Take photographs and make sketches to record the pattern of the existing materials prior to removal. Replace any bricks, stones, or pavers damages due to construction on this project with approved in-kind, matching materials.

Repair and replacement of existing sidewalk will be measured and paid for in accordance with Section 19 "Signal Cabinet Foundations" of these Project Special Provisions.

Complete all repairs with in-kind materials to all sidewalks removed for construction and reopen the repaired and restored sidewalk to pedestrian traffic within five consecutive calendar days following initial removal. If the Contractor fails to repair and reopen a sidewalk in accordance with these Project Special provisions within the time frame specified, the Department reserves the right to make the necessary repairs, and all expenses incurred by the Department in making the repairs and restoring the sidewalk will be deducted from payment due the Contractor, plus $500 liquidated damage per occasion, per day, or any portion thereof, until corrected.

Do not trim, remove, or damage tree limbs within historic districts. Hand-lashing of aerial cables to messenger cable may be required in some areas due to overhanging and protruding tree limbs along the cable route.

P. Related Projects

The current Klumac Road Project (NCDOT TIP # U-3459) is realigning Klumac Road from Martin Luther King Jr. Avenue to Main Street, removing existing traffic signals, and installing new traffic signals. Contractor should not begin any work within this project area until U-3459 is completed. Coordinate with the Engineer on how to proceed if U-3459 has not been completed and construction in these areas is on the critical path of the project schedule.

The City has general maintenance backlog work for public safety that will need to be continued throughout the duration of this project. Coordinate with Engineer for actions to be taken if any City maintenance construction prohibits the availability of the traffic signal for construction.

Q. Sequence of Construction

Construction shall have minimal disruption to the existing signal operations. After taking down an existing communication channel, the contractor must complete all construction for traffic signals in that channel in a time period no greater than one day per traffic signal in that channel. Establish time-based coordination within the limits of the prior closed loop system and maintain controller clocks.

As new intersections are installed but are not under monitoring and supervision of the new central system, maintain existing signal coordination and common controller clock time. All clocks that are updated shall be updated from a single clock source. Review each intersection that has been installed but is not online on a weekly basis in the form of a field visit and review the controller clock for drift against the common time source. Reset clock to common time source if it has drifted. Record time and date of each visit, activity performed, and person performing visit. Maintain of clock maintenance activity in a single document and furnish to the Engineer for review upon request. Failure to visit each intersection that is not online to check and update clocks will result in a liquidated damage of $1,500 per visit not performed.

All work at the TOC shall commence following the completion of all intersection and communications work. Contact Engineer prior to entering the Customer Service Center or City Administration buildings. Coordinate and obtain approval from Engineer regarding allowable working time in buildings.

R. Training

Conduct one of the Signal Controller and Cabinet Assembly training sessions prior to the installation of any new controllers and cabinets on the project.

1.4. MEASUREMENT AND PAYMENT

There will be no direct payment for work covered in this section. Payment at the contract unit prices for the various items in the contract will be full compensation for all work covered by this section.

Repair, removal and replacement of damaged or unacceptable equipment or work under this section will be at no additional cost to the Department. The Department will deduct the cost of Department-owned equipment damaged by the Contractor from money due to the Contractor.

If the Department or City of Salisbury performs maintenance and emergency service necessary to ensure continuous traffic signal operation, all expenses incurred by the Department or City in implementing this option will be deducted from payment due the Contractor, plus $2,500 liquidated damage per occasion, per day or any portion thereof, until corrected.

2. MOBILIZATION

2.1. DESCRIPTION

This work consists of preparatory work and operations to mobilize personnel, materials and equipment to the project site.

2.2. MEASUREMENT AND PAYMENT

Mobilization will be paid as contract lump sum price.

Partial payments for Mobilization will be made with the first and second partial pay estimates paid on the contract and will be made at the rate of 50% lump sum price on each of these partial pay estimates, provided the amount bid for Mobilization does not exceed 5% of the total amount bid for the contract. Where the amount bid for Mobilization exceeds 5% of the total amount bid for the contract, 2.5% of the total amount bid will be paid on each of the first 2 partial pay estimates. That portion exceeding 5% will be paid on the last partial pay estimate.

As an exception to the above, where the work covered by the contract is limited exclusively to the resurfacing of an existing pavement, payment of the entire lump sum price for *Mobilization* will be made with the first partial pay estimate paid on the contract, provided the amount bid does not exceed 5% of the total amount bid for the contract. Where the amount bid for *Mobilization* exceeds 5% of the total amount bid for the contract, 5% of the total amount bid will be paid on the first partial pay estimate. That portion exceeding 5% will be paid on the last partial pay estimate.

Such price and payment includes, but is not limited to, the movement of personnel, equipment, supplies and incidentals to the project site, for the establishment of offices, buildings and other facilities necessary for work on the project; the removal and disbandment of those personnel, equipment, supplies, incidentals or other facilities that were established for the prosecution of work on the project; and for all other work and operations that shall be performed for costs incurred before beginning work on the various items on the project site.

Payment will be made under:

Mobilization.....Lump Sum

3. SIGNAL HEADS

3.1. DESCRIPTION

Furnish and install vehicle and pedestrian LED signal heads, visors, interconnecting brackets, wire entrance fittings, mounting assemblies, signal cable, lashing wire, pedestrian pushbuttons (and associated lead-in cable), pedestrian signal signs, grounding systems and all necessary hardware.

3.2. MATERIAL

A. General

Furnish material, equipment and hardware under this section that is pre-approved on the ITS and Signals QPL.

Fabricate vehicle signal head housings and end caps from die-cast aluminum. Fabricate 12-inch and 16-inch pedestrian signal head housings and end caps from die-cast aluminum. Fabricate 9-inch pedestrian signal head housings, end caps, and visors from virgin polycarbonate material. Provide visor mounting screws, door latches, and hinge pins fabricated from stainless steel. Provide interior screws, fasteners, and metal parts fabricated from stainless steel or corrosion resistant material.

Fabricate tunnel and traditional visors from sheet aluminum.

Paint all surfaces inside and outside of signal housings and doors. Paint outside surfaces of tunnel and traditional visors, messenger cable mounting assemblies, pole and pedestal mounting assemblies, and pedestrian pushbutton housings. Have electrostatically-applied, fused-polyester paint in highway yellow (Federal Standard 595C, Color Chip Number 13538), or unless otherwise shown in the Plans paint in dark green (Federal Standard 595B, Color Chip Number 14036), a minimum of 2.5 to 3.5 mils thick. Do not apply paint to the latching hardware or rigid vehicle signal head mounting brackets for mast-arm attachments.

Have the interior surfaces of tunnel and traditional visors painted an alkyd urea black synthetic baking enamel with a minimum gloss reflectance and meeting the requirements of MIL-E-10169, "Enamel Heat Resisting, Instrument Black."

For pole mounting, provide side of pole mounting assemblies with framework and all other hardware necessary to make complete, watertight connections of the signal heads to the poles and pedestals. Fabricate the mounting assemblies and frames from aluminum with all necessary hardware, screws, washers, etc. to be stainless steel. Provide mounting fittings that match the positive locking device on the signal head with the serrations integrally cast into the brackets. Provide upper and lower pole plates that have a 1 ¼-inch vertical conduit entrance hubs with the hubs capped on the lower plate and 1 ½-inch horizontal hubs. Ensure that the assemblies provide rigid attachments to poles and pedestals so as to allow no twisting or swaying of the signal heads. Ensure that all raceways are free of sharp edges and protrusions, and can accommodate a minimum of ten Number 14 AWG conductors.

For pedestal mounting, provide a post-top slipfitter mounting assembly that matches the positive locking device on the signal head with serrations integrally cast into the slipfitter. Provide stainless steel hardware, screws, washers, etc. Provide a minimum of six 3/8 X 3/4-inch long square head bolts for attachment to pedestal. Provide a center post for multi-way slipfitters.

For light emitting diode (LED) traffic signal modules, provide the following requirements for inclusion on the Department's Qualified Products List for traffic signal equipment.

1. Sample submittal,
2. Third-party independent laboratory testing results for each submitted module with evidence of testing and conformance with all of the Design Qualification Testing specified in section 6.4 of each of the following Institute of Transportation Engineers (ITE) specifications:
   - Vehicle Traffic Control Signal Heads – Light Emitting Diode (LED) Circular Signal Supplement
   - Vehicle Traffic Control Signal Heads – Light Emitting Diode (LED) Vehicle Arrow Traffic Signal Supplement
   - Pedestrian Traffic Control Signal Indications –Light Emitting Diode (LED) Signal Modules.

   (Note: The Department currently recognizes two approved independent testing laboratories. They are Intertek ETL Semko and Light Metrics, Incorporated with Garwood Laboratories. Independent laboratory tests from other laboratories may be considered as part of the QPL submittal at the discretion of the Department,
3. Evidence of conformance with the requirements of these specifications,
4. A manufacturer's warranty statement in accordance with the required warranty, and
5. Submittal of manufacturer's design and production documentation for the model, including but not limited to, electrical schematics, electronic component values, proprietary part numbers, bill of materials, and production electrical and photometric test parameters.
6. Evidence of approval of the product to bear the Intertek ETL Verified product label for LED traffic signal modules.

In addition to meeting the performance requirements for the minimum period of 60 months, provide a written warranty against defects in materials and workmanship for the modules for a period of 60 months after installation of the modules. During the warranty period, the manufacturer must provide new replacement modules within 45 days of receipt of modules that have failed at no cost to the State. Repaired or refurbished modules may not be used to fulfill the manufacturer's warranty obligations. Provide manufacturer's warranty documentation to the Department during evaluation of product for inclusion on Qualified Products List (QPL).

B. Vehicle Signal Heads

Comply with the ITE standard "Vehicle Traffic Control Signal Heads". Provide housings with provisions for attaching backplates.

Provide visors that are 8 inches in length for 8-inch vehicle signal head sections. Provide visors that are 10 inches in length for 12-inch vehicle signal heads.

Provide a termination block with one empty terminal for field wiring for each indication plus one empty terminal for the neutral conductor. Have all signal sections wired to the termination block. Provide barriers between the terminals that have terminal screws with a minimum Number 8 thread size and that will accommodate and secure spade lugs sized for a Number 10 terminal screw.

Mount termination blocks in the yellow signal head sections on all in-line vehicle signal heads. Mount the termination block in the red section on five-section vehicle signal heads.

Furnish vehicle signal head interconnecting brackets. Provide one-piece aluminum brackets less than 4.5 inches in height and with no threaded pipe connections. Provide hand holes on the bottom of the brackets to aid in installing wires to the signal heads. Lower brackets that carry no wires and are used only for connecting the bottom signal sections together may be flat in construction.

For messenger cable mounting, provide messenger cable hangers, wire outlet bodies, balance adjusters, bottom caps, wire entrance fitting brackets, and all other hardware necessary to make

complete, watertight connections of the vehicle signal heads to the messenger cable. Fabricate mounting assemblies from malleable iron or steel and provide serrated rings made of aluminum. Provide messenger cable hangers and balance adjusters that are galvanized before being painted. Fabricate balance adjuster eyebolt and eyebolt nut from stainless steel or galvanized malleable iron. Provide messenger cable hangers with U-bolt clamps. Fabricate washers, screws, bolts, clevis pins, cotter pins, nuts, and U-bolt clamps from stainless steel.

For mast-arm mounting, provide rigid vehicle signal head mounting brackets and all other hardware necessary to make complete, watertight connections of the vehicle signal heads to the mast arms and to provide a means for vertically adjusting the vehicle signal heads to proper alignment. Fabricate the mounting assemblies from aluminum, and provide serrated rings made of aluminum. Provide stainless steel cable attachment assemblies to secure the brackets to the mast arms. Ensure all fastening hardware and fasteners are fabricated from stainless steel.

Provide LED vehicular traffic signal modules (hereafter referred to as modules) that consist of an assembly that uses LEDs as the light source in lieu of an incandescent lamp for use in traffic signal sections. Use LEDs that are aluminum indium gallium phosphorus (AlInGaP) technology for red and yellow indications and indium gallium nitride (InGaN) for green indications. Install the ultra bright type LEDs that are rated for 100,000 hours of continuous operation from -40°F to +165°F. Design modules to have a minimum useful life of 60 months and to meet all parameters of this specification during this period of useful life.

For the modules, provide spade terminals crimped to the lead wires and sized for a #10 screw connection to the existing terminal block in a standard signal head. Do not provide other types of crimped terminals with a spade adapter.

Ensure the power supply is integral to the module assembly. On the back of the module, permanently mark the date of manufacture (month & year) or some other method of identifying date of manufacture.

Tint the red, yellow and green lenses to correspond with the wavelength (chromaticity) of the LED. Transparent tinting films are unacceptable. Provide a lens that is integral to the unit with a smooth outer surface.

1. LED Circular Signal Modules

Provide modules in the following configurations: 12-inch circular sections, and 8-inch circular sections. All makes and models of LED modules purchased for use on the State Highway System shall appear on the current NCDOT Traffic Signal Qualified Products List (QPL).

Provide the manufacturer's model number and the product number (assigned by the Department) for each module that appears on the 2012 or most recent Qualified Products List. In addition, provide manufacturer's certification in accordance with Article 106-3 of the Standard Specifications, that each module meets or exceeds the ITE "Vehicle Traffic Control Signal Heads – Light Emitting Diode (LED) Circular Signal Supplement" dated June 27, 2005 (hereafter referred to as VTCSH Circular Supplement) and other requirements stated in this specification.

Provide modules that meet the following requirements when tested under the procedures outlined in the VTCSH Circular Supplement:

Module Type	Max. Wattage at 165° F	Nominal Wattage at 77° F
12-inch red circular	17	11
8-inch red circular	13	8
12-inch green circular	15	15
8-inch green circular	12	12

For yellow circular signal modules, provide modules tested under the procedures outlined in the VTCSH Circular Supplement to insure power required at 77° F is 22 Watts or less for the 12-inch circular module and 13 Watts or less for the 8-inch circular module.

Note: Use a wattmeter having an accuracy of ±1% to measure the nominal wattage and maximum wattage of a circular traffic signal module. Power may also be derived from voltage, current and power factor measurements.

2. LED Arrow Signal Modules

Provide 12-inch omnidirectional arrow signal modules. All makes and models of LED modules purchased for use on the State Highway System shall appear on the current NCDOT Traffic Signal Qualified Products List (QPL).

Provide the manufacturer's model number and the product number (assigned by the Department) for each module that appears on the 2012 or most recent Qualified Products List. In addition, provide manufacturer's certification in accordance with Article 106-3 of the Standard Specifications, that each module meets or exceeds the requirements for 12-inch omnidirectional modules specified in the ITE "Vehicle Traffic Control Signal Heads – Light Emitting Diode (LED) Vehicle Arrow Traffic Signal Supplement" dated July 1, 2007 (hereafter referred to as VTCSH Arrow Supplement) and other requirements stated in this specification.

Provide modules that meet the following requirements when tested under the procedures outlined in the VTCSH Arrow Supplement:

Module Type	Max. Wattage at 165° F	Nominal Wattage at 77° F
12-inch red arrow	12	9
12-inch green arrow	11	11

For yellow arrow signal modules, provide modules tested under the procedures outlined in the VTCSH Arrow Supplement to insure power required at 77° F is 12 Watts or less.

Note: Use a wattmeter having an accuracy of ±1% to measure the nominal wattage and maximum wattage of an arrow traffic signal module. Power may also be derived from voltage, current and power factor measurements.

C. Pedestrian Signal Heads

Provide pedestrian signal heads with international symbols that meet the MUTCD. Do not provide letter indications.

Comply with the ITE standard for "Pedestrian Traffic Control Signal Indications" and the following sections of the ITE standard for "Vehicle Traffic Control Signal Heads" in effect on the date of advertisement:

- Section 3.00 - "Physical and Mechanical Requirements"
- Section 4.01 - "Housing, Door, and Visor: General"
- Section 4.04 - "Housing, Door, and Visor: Materials and Fabrication"

- Section 7.00 - "Exterior Finish"

Provide a double-row termination block with three empty terminals and number 10 screws for field wiring. Provide barriers between the terminals that accommodate a spade lug sized for number 10 terminal screws. Mount the termination block in the hand section. Wire all signal sections to the terminal block.

Where required by the plans, provide 16-inch pedestrian signal heads with traditional three-sided, rectangular visors, 6 inches long. Where required by the plans, provide 12-inch pedestrian signal heads with traditional three-sided, rectangular visors, 8 inches long.

Provide 2-inch diameter pedestrian push-buttons with weather-tight housings fabricated from die-cast aluminum and threading in compliance with the NEC for rigid metal conduit. Provide a weep hole in the housing bottom and ensure that the unit is vandal resistant.

Provide push-button housings that are suitable for mounting on flat or curved surfaces and that will accept 1/2-inch conduit installed in the top. Provide units that have a heavy duty push-button assembly with a sturdy, momentary, normally-open switch. Have contacts that are electrically insulated from the housing and push-button. Ensure that the push-buttons are rated for a minimum of 5 mA at 24 volts DC and 250 mA at 12 volts AC.

Provide standard R10-3 signs with mounting hardware that comply with the MUTCD in effect on the date of advertisement. Provide R10-3E signs for countdown pedestrian heads and R10-3B for non-countdown pedestrian heads.

Design the LED pedestrian traffic signal modules (hereafter referred to as modules) for installation into standard pedestrian traffic signal sections that do not contain the incandescent signal section reflector, lens, eggcrate visor, gasket, or socket. Provide modules that consist of an assembly that uses LEDs as the light source in lieu of an incandescent lamp. Use LEDs that are of the latest aluminum indium gallium phosphorus (AlInGaP) technology for the Portland Orange hand and countdown displays. Use LEDs that are of the latest indium gallium nitride (InGaN) technology for the Lunar White walking man displays. Install the ultra-bright type LEDs that are rated for 100,000 hours of continuous operation from -40°F to +165°F. Design modules to have a minimum useful life of 60 months and to meet all parameters of this specification during this period of useful life.

Design all modules to operate using a standard 3 - wire field installation. Provide spade terminals crimped to the lead wires and sized for a #10 screw connection to the existing terminal block in a standard pedestrian signal housing. Do not provide other types of crimped terminals with a spade adapter.

Ensure the power supply is integral to the module assembly. On the back of the module, permanently mark the date of manufacture (month & year) or some other method of identifying date of manufacture.

Provide modules in the following configuration: 16-inch displays which have the solid hand/walking man overlay on the left and the countdown on the right, and 12-inch displays which have the solid hand/walking man module as an overlay. All makes and models of LED modules purchased for use on the State Highway System shall appear on the current NCDOT Traffic Signal Qualified Products List (QPL).

Provide the manufacturer's model number and the product number (assigned by the Department) for each module that appears on the 2012 or most recent Qualified Products List. In addition, provide manufacturer's certification in accordance with Article 106-3 of the Standard Specifications, that each module meets or exceeds the ITE "Pedestrian Traffic Control Signal Indicators - Light Emitting

Diode (LED) Signal Modules" dated August 04, 2010 (hereafter referred to as PTCSI Pedestrian Standard) and other requirements stated in this specification.

Provide modules that meet the following requirements when tested under the procedures outlined in the PTCSI Pedestrian Standard:

Module Type	Max. Wattage at 165° F	Nominal Wattage at 77° F
Hand Indication	16	13
Walking Man Indication	12	9
Countdown Indication	16	13

Note: Use a wattmeter having an accuracy of ±1% to measure the nominal wattage and maximum wattage of a circular traffic signal module. Power may also be derived from voltage, current and power factor measurements.

Provide module lens that is hard coated or otherwise made to comply with the material exposure and weathering effects requirements of the Society of Automotive Engineers (SAE) J576. Ensure all exposed components of the module are suitable for prolonged exposure to the environment, without appreciable degradation that would interfere with function or appearance.

Ensure the countdown display continuously monitors the traffic controller to automatically learn the pedestrian phase time and update for subsequent changes to the pedestrian phase time.

Ensure the countdown display begins normal operation upon the completion of the preemption sequence and no more than one pedestrian clearance cycle.

D. Signal Cable

Furnish 16-4 and 16-7 signal cable that complies with IMSA specification 20-1 except provide the following conductor insulation colors:

- For 16-4 cable: white, yellow, red, and green
- For 16-7 cable: white, yellow, red, green, yellow with black stripe tracer, red with black stripe tracer, and green with black stripe tracer. Apply continuous stripe tracer on conductor insulation with a longitudinal or spiral pattern.

Provide a ripcord to allow the cable jacket to be opened without using a cutter. IMSA specification 19-1 will not be acceptable. Provide a cable jacket labeled with the IMSA specification number and provide conductors constructed of stranded copper.

3.3. CONSTRUCTION METHODS

A. General

Bag new pedestrian and vehicle signal heads with burlap bags or bags made of non-ripping material specifically designed for covering signal heads until signal heads are placed in operation. Do not use trash bags of any type.

When new signal heads are placed into operation, immediately bag and remove signals heads that are not to be reused.

Adjust each signal head vertically and horizontally so that light output will be of maximum effectiveness for traffic and pedestrians. Do not tilt signal heads forward.

Reposition signal heads as required for various construction phases.

B. Vehicle Signal Heads

Install vehicle signal heads such that the top of the signal housing located over any portion of a highway that can be used by motor vehicles is no more than 25.6 ft above the pavement.

Install vehicle signal heads such that the maximum mounting height to the top of the signal housing is as shown in the figure below if the location is between 40 ft and 53 ft from the stop line.

Maximum Mounting Height of Signal Heads

Located Between 40 Feet and 53 Feet from Stop Line

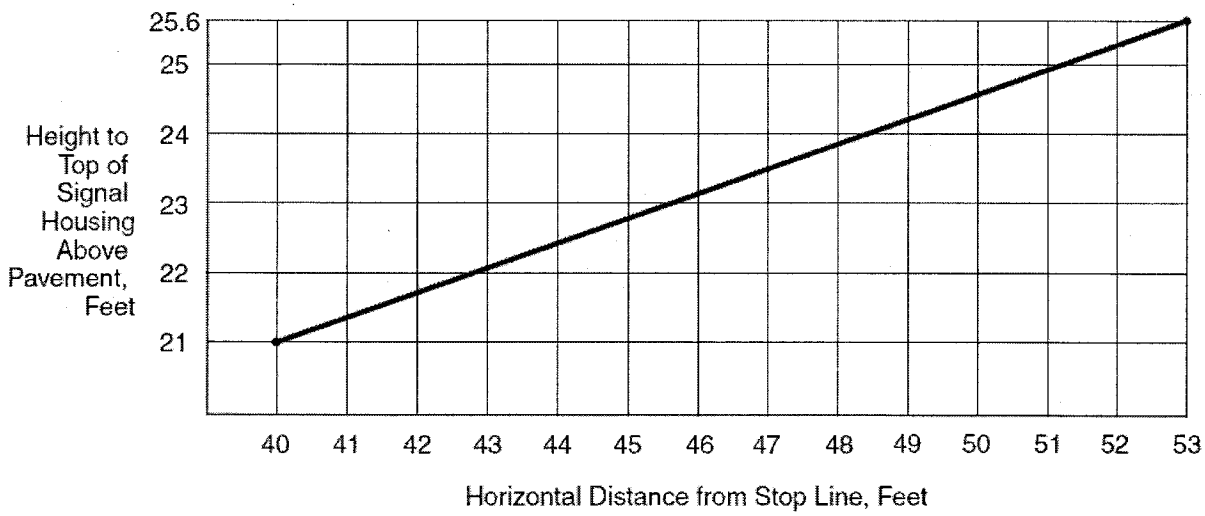

Install vehicle signal heads such that the bottom of the signal housing and any related attachments to the signal head located over any portion of a highway that can be used by motor vehicles is at least 16.5 ft above the pavement directly below the signal head.

1) Install vehicle signal heads such that the bottom of the signal housing (including brackets) of a signal head that is vertically arranged and not located over a roadway is as follows:

   a) A minimum of 8 ft and a maximum of 19 ft above the sidewalk or, if there is no sidewalk, above the pavement grade at the center of the roadway.

   b) A minimum of 8 ft and a maximum of 19 ft above the median island grade of a center median island if located on the near side of the intersection.

2) Install vehicle signal heads such that the bottom of the signal housing (including brackets) of a signal head that is horizontally arranged and not located over a roadway is as follows:

   a) A minimum of 8 ft and a maximum of 22 ft above the sidewalk or, if there is no sidewalk, above the pavement grade at the center of the roadway.

   b) A minimum of 8 ft and a maximum of 22 ft above the median island grade of a center median island if located on the near side of the intersection.

Where vehicle signal heads are installed on messenger cable, install mounting hardware consisting of messenger cable hanger, balance adjuster, bottom cap, wire entrance fitting bracket and insulating bushings.

Where vehicle signal heads are installed on mast arms, install mounting hardware consisting of rigid vehicle signal head mounting brackets.

Install signal cable in continuous lengths between signal controller cabinets and signal heads. Route signal cable to minimize the length of cable installed and the number of cables and conductors in each run. Pull 36" of additional signal cable into controller cabinets.

Wrap signal cable to messenger cable with at least 4 turns of wrapping tape spaced at intervals less than 15" or lash signal cable to messenger cable with one 360° spiral of lashing wire per 12".

Make electrical connections inside each signal head, signal controller cabinet and termination compartment in metal poles. Do not splice cable at any other point between signal heads and controller cabinet.

Coil sufficient signal cable beside each vehicle signal head to accommodate head shifts during various construction phases. For final signal head locations, coil 36"on each side of signal head if signal cable comes from both directions. If signal cable terminates at the signal head, coil 36"of signal cable on the same side as the cable run.

C. Pedestrian Signal Heads

Install signs with mounting hardware immediately above pedestrian pushbuttons.

Mount the pushbutton or accessible pedestrian signal (APS) at a minimum height of 3.5 ft but no higher than 4.0 ft above the adjacent pedestrian travelway.

Connect each pushbutton with a separate run of lead-in cable between the pushbutton and the termination panel in the controller cabinet. Bond pushbutton housing and all metal components to cabinet ground using lead-in cable ground.

Mount pedestrian signal heads so the bottom of the signal housing, including brackets, is not less than 7 ft or more than 10 ft above sidewalk level. Position and adjust the heads to provide maximum visibility at the beginning of the controlled crosswalk. Ensure pedestrian signal heads and vehicular signal heads mounted on the same support are physically separated from each other.

3.4. MEASUREMENT AND PAYMENT

Vehicle Signal Head (____) and *Pedestrian Signal Head (____)* will be measured and paid as the actual number of signal heads of each type of material (aluminum or polycarbonate), size and number of sections furnished, installed and accepted.

Signal Cable will be measured and paid as actual linear feet of signal cable furnished, installed and accepted. Measurement will be point to point with no allowance for sag. Twenty-five feet will be allowed for vertical segments up or down poles.

No measurement will be made of visors, wire entrance fittings, interconnecting brackets, mounting assemblies, pedestrian pushbuttons, pedestrian signal signs and signal head shifts as these are incidental to furnishing and installing signal heads. No measurement will be made for drip loops, coiled sections or lashing wire as these are incidental to furnishing and installing signal cable.

Payment will be made under:

Vehicle Signal Head (12", 3 Section) .....Each

Vehicle Signal Head (12", 4 Section) .....Each

Vehicle Signal Head (12", 5 Section) .....Each

Pedestrian Signal Head (16", 1 Section with Countdown) .....Each

Pedestrian Signal Head (16", 1 Section with Countdown, Dark Green Finish) .....Each

Signal Cable .....Linear Foot

4. UNDERGROUND CABLE INSTALLATION

4.1. DESCRIPTION

Furnish and install conduit for underground cable installation with tracer wire, miscellaneous fittings, all necessary hardware, marker tape, backfill, graded stone, paving materials and seeding and mulching.

4.2. MATERIAL

A. General

Furnish material, equipment and hardware under this section that is pre-approved on the ITS and Signals QPL.

Comply with Sections 545-2 and 545-3 (Graded Stone) and 1018-2 (Backfill) of the Standard Specifications.

B. Conduit

1. Conduit Bodies, Boxes and Fittings

Use conduit bodies, boxes, and fittings that meet UL Standard 514A or 514B for electrical and communications installations.

2. Rigid Metallic Conduit

Provide rigid hot dipped galvanized steel conduit that meets UL Standard 6 with rigid full weight sherardized or galvanized threaded fittings.

3. Solid Wall HDPE Conduit

Use HDPE conduit that conforms to UL Standard 651B. Provide conduit meeting the table below with minimum wall thickness ratios corresponding to EPEC-40 (Schedule 40), EPEC-80 (Schedule 80) or EPEC-B (SDR 13.5) as listed in UL Standard 651B, Table 5.1, 5.2 and 5.3.

Conduit Trade Size	Furnish
1"	EPEC-40
1 1/4"	EPEC-40
1 1/2"	EPEC-B (SDR 13.5)
2"	EPEC-B (SDR 13.5)
2 1/2"	EPEC-B (SDR 13.5)
3"	EPEC-B (SDR 13.5)
4"	EPEC-B (SDR 13.5)
5"	EPEC-80
6"	EPEC-80

Ensure the PE resin compounds used in manufacturing the conduit meet or exceed the cell classification PE 334420C (black with 2% minimum carbon black) or PE 334420E (colored conduit with UV inhibitors) in ASTM D3350 and the table below.

Property	Requirement	Test Method
Density	0.940 - 0.947g/cm3	ASTM D1505 ASTM D792 ASTM D4883
Melt Index (condition 190/2.16 is acceptable)	< 0.4 grams/10 minutes	ASTM D1238
Flexural Modulus	80,000 psi, min.	ASTM D790
Tensile Strength	Tensile Strength 3,000 psi, min.	ASTM D638
Elongation	Elongation 400%, min.	ASTM D638
Slow Crack Growth Resistance	An ESCR as per condition B, 10% IGEPAL requirement of F50>24 hrs is allowable	ASTM D1693
Hydrostatic Design Basis	"0" for Non-Pressure Rated Pipe	ASTM D2837
UV Resistance (Outdoor Conduit Only)	Stabilize with at least 2% by weight carbon black or colored with UV Inhibitor	ASTM D4218

Furnish conduits in the colors for the applications shown in the table below. For conduits manufactured with stripes, ensure the stripes are uniformly located around the conduit with 120 degrees of separation. Do not use "Solid Yellow" or "Black with Yellow Stripes" conduit.

Conduit Contents	Preferred Solid Color	Alternate
Signal Cable	Black	None
Loop Lead-in Cable	White	Black with White Stripes
Communication Cable (Copper, Fiber Optic, Coaxial)	Orange	Black with Orange Stripes
Electrical Power Cable	Red	Black with Red Stripes

Ensure the HDPE conduit is resistant to benzene, calcium chloride, ethyl alcohol, fuel oil, gasoline, lubricating oil, potassium chloride, sodium chloride, sodium nitrate and transformer oil and is protected against degradation due to oxidation and general corrosion.

Furnish factory lubricated, low friction, conduit with a coefficient of friction of 0.10 or less in accordance with Telcordia GR-356.

Ensure the supplied conduit is identified and certified as meeting, UL Standard 651B. Ensure the conduit is marked at least with the following information on 10 ft or less intervals:

1) Material: HDPE
2) Trade Size: i.e., 2"
3) Conduit Type: SDR 13.5 or EPEC-B
4) Manufacturer's name or trademark
5) Manufacturer's identity code to identify manufacturing date, facility, etc.
6) UL symbol or UL listing number

Furnish coilable conduit that is supplied on reels in continuous lengths for transportation and storage outside. Ensure that the process of installing the coilable conduit on the reel does not alter the properties or performance of the conduit for its intended purpose.

4. Conduit Plugs, Pull Line and Tracer Wire

Furnish conduit plugs that provide a watertight barrier when installed in conduit. Furnish conduit plugs sized in accordance with conduit. Ensure conduit plug provides a means to secure a pull line to the end of the plug. Provide removable and re-usable conduit plugs. Conduit plugs are not required to be listed electrical devices.

For all spare conduits, furnish 3/4", pre-lubricated, woven polyester tape, pull line with minimum rated tensile strength of 2,500 lb. Pull lines are not required to be listed electrical devices.

Provide green insulated number 14 AWG, THWN, stranded copper wire to serve as tracer wire.

C. Duct And Conduit Sealer

Use duct and conduit sealer or mastic which is a putty-like compound and:

A. Is permanently non-hardening, non-oxidizing, and non-corrosive to metals, rubber, plastic, lacquer and paints;

B. Is readily workable for thumbing into openings and forming into seals around wires inside conduits and openings around conduits;

C. Has a service temperature range of minus 30°F to 200°F;

D. Is clean, non-poisonous and non-injurious to human skin;

E. Seals against water, dust and air and shall adhere to wood, glass, plastics, metal, rubber and painted surfaces; and

F. Is non-conductive

4.3. CONSTRUCTION METHODS

A. General

Ensure conduit is free of moisture and debris before pulling cables.

Following installation of conduit where cable is not immediately installed or conduit is for future use (spare), seal the ends of the conduit with a conduit plug. Secure a pull line to the conduit plug in such a manner that it will not interfere with installation of the conduit plug and provides a watertight seal.

Extend ends of conduit 2" to 4" above concrete surfaces and 4" above crushed stone bases. For metallic conduit, install metallic bushings and bond conduits.

1. Conduit

Conduit Entering Junction Boxes

Terminate conduits installed for communications cables (fiber optics, twisted pair, ethernet and coaxial) in oversized junction boxes. Do not install other conduits in the oversized junction box unless otherwise specified.

Terminate conduits installed for signal wiring, including lead-in cable, in standard size junction boxes unless otherwise specified.

For all conduits entering junction boxes, seal spare conduits with approved conduit plugs. Seal conduits containing fiber-optic communications cable, signal cable and lead-in cable with duct and conduit sealer.

Conduit Entering Cabinet Foundations

For all conduits entering the cabinet through the cabinet foundation, seal spare conduits with approved conduit plugs. Seal conduits containing fiber-optic communications cable, signal cable and lead-in cable with duct and conduit sealer.

2. Tracer Wire

Install tracer wire in all conduits containing fiber-optic cable. Pull tracer wire simultaneously in a continuous length with the fiber-optic cable. Where multiple pulls of fiber-optic cable are required and conduit is placed in the same trench, only one tracer wire is required. Where multiple pulls of fiber-optic cable are required and conduits may separate into individual trenches, install a tracer wire in each conduit run. Provide waterproof butt splices where tracer wire is spliced. Splicing will be allowed only in cabinets and junction boxes. Label all tracer wires entering the equipment cabinet.

3. Plan of Record Drawings

Upon completion of the conduit system for communications, furnish the Engineer with a plan of record drawing detailing the locations of the conduit system.

B. Trenching

In certain cases the Contractor may use an alternate material and method of installation between trenching and plowing based on existing field conduits and preferences. Obtain approval before proceeding.

1. General

Install HDPE or rigid metallic conduit for all underground runs. Install rigid metallic conduit for all underground runs located inside railroad right-of-way. Clean existing underground conduit to be incorporated into a new system. Bond all metallic conduit.

If more than one conduit is required between the same points, install conduit in one common trench. Install non-detectable marker tape.

Install longitudinal runs of conduit a minimum of one foot from back of curb or 6 ft from edge of pavement in the absence of curb. If ditches are present, install conduit a minimum of 4 ft from the bottom of the ditch line.

Maintain a minimum trench depth of 30" (or 12" in areas blocked by rock or impenetrable obstructions) below finished grade or 6" below roadway subbase, whichever is deeper. Upon completion, restore surface to like-original condition within 7 calendar days of occurrence of damage. Remove all rock and debris from backfill material. Remove excess material from site and compact area according to Article 300-7 of the Standard Specifications. Backfill with excavated material and compact to 95% of original density.

Backfill trench at locations along the trench path where non-movable objects, such as rocks and boulders, cannot be avoided. The purpose of the backfill is to provide a gradual change in elevation of the trench, so that excessive bending and stress will not be transferred to conduits once underground conduit system is installed.

After installation of conduits and upon completion of tamping and backfilling, perform a mandrel test on each conduit to ensure no conduit has been damaged. Furnish a non-metallic mandrel having a diameter of approximately 50% of the inside diameter of the conduit in which it is to be pulled through. If damage has occurred, replace the entire length of conduit. Ensure pull line is re-installed.

2. Unpaved Trenching

Install conduit in all unpaved areas for all cable including permanent traffic signal installations.

Rake smooth the top 1 1/2" and seed with same type of grass as surrounding area. Finish unpaved areas flush with surrounding natural ground.

3. Paved Trenching

On concrete surfaces, replace the entire joint of concrete unless otherwise specified. On all other surfaces, neatly cut and replace the width of trench with like material.

Finish paved areas with materials matching damaged areas. For conduit installed under roadways, cut neatly and replace the width of paved area damaged by trenching. For conduit installed under sidewalks and walkways, remove entire section of slab from joint to joint and replace. Place graded stone material to temporarily maintain traffic where repairs cannot be performed immediately. Comply with Article 545-4 of the Standard Specifications.

C. Directional Drilling

1. Pre-Approvals and Minimum Depth Requirements

Obtain approval before beginning drilling operations.

At all points where HDPE conduit will traverse under roadways, driveways, sidewalks or Controlled Access Areas including entrance/exit ramps, maintain a minimum depth of 4 ft or 8 times the back reamer's diameter, whichever is deeper. For an installation that runs parallel to a controlled access area or entrance/exit ramps maintain a minimum depth of 30" below finished grade. Maintain a minimum clearance of 30" below finished grade when crossing ditch lines. For the following structures, the minimum clearance requirements are:

Man-made Structure	Minimum Clearance Requirement
Bridge Foundation	5 ft horizontal and 4 ft vertical (clearances greater than minimum horizontal should continue to use the 4V:5H ratio, i.e., 10 ft horizontal should be no deeper than 8 ft)
Drainage Pipes 60" or Less	1 ft above or below [while maintaining a minimum depth of 30" below grade]
Drainage Pipes Greater than 60"	1 ft above or 4 ft below [while maintaining a minimum depth of 30" below grade]
Box Culverts	1 ft above or 4 ft below [while maintaining a minimum depth of 30" below grade]
Slope Protection	2 ft below
Slope Protection Foundation Footing	5 ft below

Guarantee the drill rig operator and digital walkover locating system operator are factory-trained to operate the make and model of equipment provided and have at least one year experience

operating the make and model of drill rig. Submit documentation of the operators' training and experience for review at least 2 weeks before start of directional drilling operations.

Provide a means of collecting and containing drilling fluid/slurry that returns to the surface such as a slurry pit. Provide measures to prevent drilling fluids from entering drainage ditches and storm sewer systems. Prevent drilling fluid/slurry from accumulating on or flowing onto pedestrian walkways, driveways and streets. Immediately remove all drilling fluids/slurry that are accidentally spilled.

2. Directional Drill Operations

Provide grounding for the drill rig in accordance with the manufacturer's recommendations.

Place excavated material near the top of the working pit and dispose of properly. Backfill pits and trenches to facilitate drilling operations immediately after drilling is completed.

Use drill head suitable for type of material being drilled and sized no more than 2" larger than the outer diameter of the conduit. Direct drill to obtain proper depth and desired destination. Pressure grout with an approved bentonite/polymer slurry mixture to fill all voids. Do not jet alone or wet bore with water.

During drilling operation, locate drill head every 10 ft along drill path and before traversing underground utilities or structures. Use digital walkover locating system to track drill head during directional drilling operation. Ensure locating system is capable of determining pitch, roll, heading, depth and horizontal position of the drill head at any point.

Once drill head has reached final location, remove head and install back reamer of appropriate size (no more than 2" larger than outer diameter of conduits) to simultaneously facilitate back reaming of drill hole and installation of conduit. Back reamer is sized larger than actual conduits to ensure conduits are not adversely subjected to deviations caused by the original drill operation and are as straight as practical in their final position.

The intent of these Specifications is to limit the diameter of the actual drill shaft/hole so that it is no more than 2" larger than the conduit outer diameter. The 2" larger diameter may be accomplished during the original bore or during the back reaming/conduit installation process.

Once installation of conduit has started, continue installation without interruption so as to prevent conduit from becoming firmly set. Apply bentonite/polymer slurry mixture during conduit installation.

Upon completion of conduit installation, perform a mandrel test on conduit system to ensure conduit has not been damaged. Furnish non-metallic mandrel with a diameter of approximately 50% of the inside diameter of the conduit in which it is to be pulled through. If damage has occurred, replace the entire length of conduit and ensure that pull line is re-installed.

3. Drilling Fluids

Use lubrication for subsequent removal of material and immediate installation of the conduit. The use of water and other fluids in connection with directional drilling operations will be permitted only to the extent necessary to lubricate cuttings. Do not jet alone or wet bore with water. Use drilling fluid/slurry consisting of at least 10% high-grade bentonite/polymer slurry to consolidate excavated material and seal drill hole walls.

Transport waste drilling fluid/slurry from site and dispose of in a method that complies with Federal, State and local laws and regulations.

4. Conduit Splicing

With prior approval, install a junction box at locations where splicing or coupling of conduit is necessary. Otherwise, splicing or joining of HDPE conduit is prohibited.

4.4. MEASUREMENT AND PAYMENT

Tracer Wire will be measured along the horizontal linear feet of tracer wire furnished, installed and accepted. Measurement will be along the approximate centerline of the conduit system. Payment will be made in linear feet. No payment will be made for excess tracer wire in junction boxes and/or cabinets.

Unpaved Trenching (qty)(size) & (qty)(size) will be measured horizontal linear feet of trenching for underground conduit installation of each type furnished, installed and accepted. Measurement will be along the approximate centerline of the conduit system. Payment will be in linear feet.

Directional Drill (qty)(size) & (qty)(size) will be measured horizontal linear feet of directional drill for underground conduit installation furnished, installed and accepted. Measurement will be along the approximate centerline of the conduit system. Payment will be in linear feet.

No measurement will be made of vertical segments, non-metallic conduit, metallic conduit, conduit sealing material, backfill, graded stone, paving materials, miscellaneous fittings, non-detectable marker tape, pull lines and seeding and mulching as these will be incidental to conduit installation.

Payment will be made under:

Tracer Wire .....Linear Foot

Unpaved Trenching (2, 2") .....Linear Foot

Directional Drill (2, 2") .....Linear Foot

5. JUNCTION BOXES

5.1. DESCRIPTION

Furnish and install junction boxes (pull boxes) with covers, graded stone, grounding systems and all necessary hardware.

5.2. MATERIAL

A. General

Comply with Section 545 (Graded Stone) of the Standard Specifications.

Furnish material, equipment and hardware under this section that is pre-approved on the ITS and Signals QPL.

B. Polymer Concrete (PC) Junction Boxes

Provide polymer concrete (PC) boxes which are stackable, have bolted covers and have open bottoms. Ensure vertical extensions of 6" to 12" are available from the junction box manufacturer.

Use polymer concrete material made of an aggregate consisting of sand and gravel bound together with a polymer and reinforced with glass strands to fabricate box and cover components which are exposed to sunlight. Other thermosetting glass-reinforced materials may be used for components which are not normally exposed to sunlight.

Provide certification that the polymer concrete boxes and covers meet Tier 15 requirements of ANSI/SCTE 77. Provide certification that testing methods are compliant with ANSI/SCTE 77.

Provide the required logo on the cover. Provide at least 2 size 3/8" diameter hex head stainless steel cover bolts to match inserts in the box. Provide pull slot(s) with stainless steel pin(s). Polymer concrete junction boxes are not required to be listed electrical devices.

C. Standard Size Junction Boxes

Provide standard size junction boxes and covers with minimum inside dimensions of 16"(l) x 10"(w) x 10"(d).

D. Oversized Junction Boxes

Provide oversized junction boxes and covers with minimum inside dimensions of 30"(l) x 15"(w) x 24"(d).

5.3. CONSTRUCTION METHODS

Install standard size junction boxes as shown in the plans and where underground splicing of electrical cables is necessary. Install standard size junction boxes within 3 ft of pole or pole foundation where transitioning from below ground to a riser assembly. Install standard size junction boxes within 5 ft of each end of each lateral run of conduit for electrical cables. When lateral runs for electrical cables are greater than 150 ft, install additional junction boxes to ensure distances between junction boxes does not exceed 150 ft.

Install oversized junction boxes for fiber-optic cables at locations shown in the plans.

Provide real world coordinates for all junction boxes and equipment cabinets installed or used under this project. Provide the coordinates in feet units using the North Carolina State Plane coordinate system (1983 North American Datum also known as NAD '83). Furnish coordinates that do not deviate more than 1.7 ft in the horizontal plane and 3.3 ft in the vertical plane. Global positioning system (GPS) equipment able to obtain the coordinate data within these tolerances may be used. Submit cut sheets on the GPS unit proposed to collect the data for approval by the Engineer.

Provide both a digital copy and hard copy of all information regarding the location (including, but not limited to, manufacturer, model number, and NCDOT inventory number) in the Microsoft® spreadsheet provided by the Department, shown by example in the figure below.

NCDOT Inv #	Name	Location	Latitude	Longitude	Manufacturer	Model #
05-0134	Equipment Cabinet	US 70 at Raynor Rd./ Auburn-Knightdale	-78.5500	35.6873	McCain	Type-332
05-0134	Junction Box # 1 (Phase 2 Side)	US 70 at Raynor Rd./ Auburn-Knightdale	-78.5516	35.6879	Quazite	PG1118BA12(Box) PG118HA00(Cover)
05-0134	Junction Box # 2 (Phase 2 Side)	US 70 at Raynor Rd./ Auburn-Knightdale	-78.5506	35.6876	Quazite	PG1118BA12(Box) PG118HA00(Cover)
05-0134	Junction Box # 3 (Near Cabinet)	US 70 at Raynor Rd./ Auburn-Knightdale	-78.5501	35.6873	Quazite	PG1118BA12(Box) PG118HA00(Cover)
05-0134	Junction Box # 4 (Phase 6 Side)	US 70 at Raynor Rd./ Auburn-Knightdale	-78.5486	35.6873	Quazite	PG1118BA12(Box) PG118HA00(Cover)
05-0134	Junction Box # 5 (Phase 6 Side)	US 70 at Raynor Rd./ Auburn-Knightdale	-78.5493	35.6876	Quazite	PG1118BA12(Box) PG118HA00(Cover)
05-0134	Junction Box # 6 (Phase 4 Side)	US 70 at Raynor Rd./ Auburn-Knightdale	-78.5503	35.6879	Quazite	PG1118BA12(Box) PG118HA00(Cover)

Submit coordinate information in a spreadsheet provided by the Department and in accordance with this article.

5.4. MEASUREMENT AND PAYMENT

Junction Box (____) will be measured and paid in actual number of junction boxes of each size and type furnished, installed and accepted.

No measurement will be made of covers, graded stone and grounding systems as these will be incidental to furnishing and installing junction boxes.

Payment will be made under:

Junction Box (Standard Size) .....Each

Junction Box (Oversized) .....Each

6. WOOD POLES

6.1. DESCRIPTION

Furnish and install poles, grounding systems and all necessary hardware.

6.2. MATERIAL

A. General

Furnish material, equipment and hardware under this section that is pre-approved on the ITS and Signals QPL for wood poles available on the Department's website.

Use Southern Pine timber and lumber graded in accordance with the current grading rules of the Southern Pine Inspection Bureau unless otherwise specified or approved by the Engineer. Use stress rated grades equal to or higher than the grades specified. For temporary crossings, the use of stress rated lumber having stress ratings below those specified may be used if approved by the Engineer.

Have all timber and lumber, including any preservative treatment, inspected and/or tested at no cost to the Department by an approved commercial inspection company before it is delivered to the project. Provide industry standard commercial inspection reports for each shipment of untreated timber or lumber before its use on the project. Provide industry standard commercial inspection reports and treatment test reports for each shipment of treated timber or lumber before its use on the project. Perform all timber and lumber treatment inspections in accordance with Standard M2 (Part A) of the AWPA Specifications. In addition, brand, hammer mark, ink stamp or tag each piece of timber or lumber with the approved commercial inspection company's unique mark to indicate it has been inspected.

B. Treated Timber and Lumber

Grade marked lumber will not be required. Brand or ink stamp each piece of treated lumber in accordance with the AWPA Standard M6.

Timber for poles shall meet ANSI O5.1 except the timber shall be treated Southern Pine or treated Douglas Fir. Use Class 3 poles unless otherwise specified in the contract.

C. Preservative Treatment

Give all timber and lumber required to be treated a preservative treatment in accordance with AWPA Standards. The required retention of chromated copper arsenate is specified on the oxide basis. Preservative retention will be determined by the assay method.

After treatment, handle the timber and lumber carefully with rope slings, without sudden dropping, breaking of the fibers, bruising or penetrating the surface with tools or hooks.

Treated timber and lumber will not be accepted for use unless it has been inspected and found satisfactory, both before and after treatment, and shall be delivered to the project site in a condition acceptable to the Engineer.

Use treating plants that have laboratory facilities at the plant site for use of the inspector in accordance with AWPA Standard T1.

Use timber preservatives conforming to AWPA Standard T1.

Treat poles in accordance with AWPA Standard U1, except require retention of preservative as below.

Give all poles a preservative treatment of either pentachlorophenol, or chromated copper arsenate. The same type of preservative shall be used throughout the entire length of the project.

Minimum retention for poles treated with pentachlorophenol will be 0.45 lb by assay of dry chemical per cubic foot of wood. Minimum retention for poles treated with chromated copper arsenate will be 0.6 lb by assay of dry chemical per cubic foot of wood.

D. Wire and Cable

Use only stranded copper conductors, unless otherwise shown in the contract or Standard Specifications. Provide wire and cable with identification labels or tags on either the wire or cable itself or on the coil, reel or smallest container in which the product is packaged when delivered to the project. Show the manufacturer's name, gauge, UL symbol and type of wire or cable on the identification label or tag. When requested by the Department, furnish samples of wire and cable to the Department at no additional cost.

Use wire and cable of the type and size shown in the contract meeting the following applicable UL standards: 44, 83, 493, 719, 854, 1063 and 1581.

Where required by the plans, use soft or annealed solid bare copper wire conforming to ASTM B3.

E. Grounding Electrodes

Provide grounding electrodes of the following types as indicated in the specifications and plans.

1. Ground Rods

Provide 5/8" diameter, 10 ft long, copper-clad steel ground rods with 10 mil thick copper cladding.

2. Sectional Ground Rods

Provide sectional ground rods comprised of 5/8" diameter, 10 ft long, steel ground rods with 10 mil thick copper cladding, welded together in a butt configuration with an exothermic weld. As an alternative, provide UL listed bronze couplers designed to connect 5/8" diameter copper-clad steel rods. Do not use threaded ground rods or threaded couplers. Provide minimum lengths required by plans.

6.3. CONSTRUCTION METHODS

Mark final pole locations and receive approval before installing poles. Unless otherwise specified, locate poles a minimum of 6 ft behind face of curb or 10 ft from edge of travelway. Ensure poles are of sufficient length (minimum 50 feet) to permit a new CCTV camera to be mounted 35 feet above the ground and to permit any associated wires and cables to maintain the minimum required clearances above the roadway, obstructions, and affected railroad tracks.

Drill or auger a hole for placement of pole and to allow for compacting. Set pole at manufacturer's recommended depth, but at a minimum depth of 5 ft. Ensure the pole is within 2 degrees of vertical when fully loaded.

Backfill hole with pole installed and tamp backfill in 6 inch lifts with a mechanical tamp until compacted density is at least 95% of original density.

On new Department-owned poles, install a grounding system consisting of #6 AWG solid bare copper wire that is exothermically welded to a single ground rod installed at base of pole or to the electrical service grounding electrode system located within 10 ft of the pole. Install ground wire so as to minimize damage from vandalism and environmental exposures. Install ground wire up pole to a point adjacent to the uppermost span. Use hot-dipped galvanized wire staples to secure ground wire to pole.

6.4. MEASUREMENT AND PAYMENT

CCTV Wood Pole (___) will be measured and paid as the actual number of wood poles furnished, installed and accepted.

No measurement will be made for installing grounding systems as these will be incidental to furnishing and installing wood poles.

Payment will be made under:

CCTV Wood Pole (50') ..... Each

7. RISER ASSEMBLIES

7.1. DESCRIPTION

Furnish and install riser assemblies with clamp-on, aluminum weatherheads or heat shrink tubing, galvanized pole attachment fittings and all necessary hardware.

7.2. MATERIAL

A. General

Furnish material, equipment and hardware under this section that is pre-approved on the ITS and Signals QPL.

B. Rigid Metallic Conduit

Provide rigid hot dipped galvanized steel conduit that meets UL Standard 6 with rigid full weight sherardized or galvanized threaded fittings.

C. Riser Sealing Devices

Furnish appropriately sized clamp-on aluminum weatherheads for electrical control and power cables.

Furnish heat shrink tubing for the installation of fiber-optic or coaxial cable in a new riser. Ensure the heat shrink tubing is made of modified polyolefin and includes a hot-melt adhesive. Provide tubing that has a length of at least 5" before heating. Ensure the heat shrink tubing will provide a watertight fit around individual cables and outer wall of the riser after heat is applied in accordance with the manufacturer's instructions.

Furnish heat shrink tubing retrofit kits for the installation of fiber optic cable or coaxial cables to an existing riser with existing cables. Ensure the heat shrink material is made of modified polyolefin and is supplied in a flat sheet design. Ensure the kit contains an apparatus to secure both ends of the flat sheet together to form a tube shaped cylinder. Ensure the securing apparatus is flexible to the point that it will allow the heat shrink material to conform to the shape and dimensions of the riser and cables once heat is applied and will not separate during the heating process. Provide heat shrink tubing retrofit kits with a hot-melt adhesive. Provide the flat sheet heat shrink material that has a minimum length of 5" prior to heating. Ensure the heat shrink tubing retrofit kit provides a watertight fit around individual cables and outer wall of the riser after heat is applied in accordance with the manufacturer's instructions.

D. Pole Line Hardware

Provide universal grade strandvises used for extra high strength steel messenger cable.

Provide other pole line hardware constructed of hot-dipped galvanized steel conforming to ASTM A153.

Provide machine bolts, eyebolts and thimble eye bolts with minimum tensile strength of 12,400 lb. Provide hot-dipped galvanized nuts, 3" x 3" curved square washers and thimbleyelets.

Provide suspension clamp fabricated from hot-dipped galvanized steel with minimum length of 5 3/4". Ensure clamp has a groove rated for the messenger cable size it is intended to secure. Provide J-hook fabricated from 3/8" thick hot-dipped galvanized steel flat or oval stock with sufficient hook

radius to cradle 11/16" diameter cable. Provide two 1/2" diameter hot-dipped galvanized bolts and nuts to tighten the clamp around the messenger cable. Provide one 5/8" diameter hot-dipped galvanized bolt of sufficient length to attach J-hook and clamp to the wood pole with a 3" x 3" curved square washer and double nuts.

Provide 3-bolt clamp fabricated from hot-dipped galvanized steel with minimum length of 5 3/4". Ensure clamp has 2 parallel grooves rated for the messenger cable size it is intended to secure. Provide three 5/8" diameter hot-dipped galvanized bolts and nuts to tighten the clamp around the messenger cable.

Provide parallel groove clamp consisting of high strength, high conductivity non-copper bearing aluminum alloy clamp halves with interlocking fingers to prevent mismatch. Ensure clamp halves have molded grooves to secure #8-1/0 AWG stranded copper wires. Provide clamps with grooves prefilled with antioxidant joint compound. Provide 3/8" hex head, square shank, galvanized steel bolt with galvanized steel lock washer and nut.

Provide 1/2" and 3/4" wide, .030" thick Type 316 stainless steel straps with Type 316 stainless steel buckles.

Provide either 0.05" x 0.30" aluminum wrapping tape or 0.06" diameter Type 316 stainless steel lashing wire for lashing cables to messenger cable. Ensure aluminum wrapping tape is 1350 alloy, O-temper, with 12,800 psi tensile strength. Use 0.045" diameter Type 316 stainless steel lashing wire to lash fiber-optic communications cable to messenger cable.

Provide hot-dipped galvanized steel clamp with groove sized for 1/4" to 3/8" messenger cable for securing lashing wire(s) to messenger cables at ends of each spiraled run. Ensure clamp hardware is hot-dipped galvanized steel.

E. Wire and Cable

Use only stranded copper conductors, unless otherwise shown in the contract or Standard Specifications. Provide wire and cable with identification labels or tags on either the wire or cable itself or on the coil, reel or smallest container in which the product is packaged when delivered to the project. Show the manufacturer's name, gauge, UL symbol and type of wire or cable on the identification label or tag. When requested by the Department, furnish samples of wire and cable to the Department at no additional cost.

Use wire and cable of the type and size shown in the contract meeting the following applicable UL standards: 44, 83, 493, 719, 854, 1063 and 1581.

Where required by the plans, use soft or annealed solid bare copper wire conforming to ASTM B3.

F. Grounding Electrodes

Provide grounding electrodes of the following types as indicated in the specifications and plans.

1. Ground Rods

Provide 5/8" diameter, 10 ft long, copper-clad steel ground rods with 10 mil thick copper cladding.

2. Sectional Ground Rods

Provide sectional ground rods comprised of 5/8" diameter, 10 ft long, steel ground rods with 10 mil thick copper cladding, welded together in a butt configuration with an exothermic weld. As an alternative, provide UL listed bronze couplers designed to connect 5/8" diameter copper-clad steel rods. Do not use threaded ground rods or threaded couplers. Provide minimum lengths required by plans.

7.3. CONSTRUCTION METHODS

Install risers with required weatherheads or heat shrink tubing on poles using pole attachment fittings. Maintain a 10" minimum and 18" maximum offset from signal messenger to the top of riser for all risers. On utility-owned poles, maintain a 40" offset from electrical utility's power conductors to top of riser and riser attachment fittings.

Use approved heat shrink tubing retrofit kits when installing new fiber-optic or coaxial cable into exiting risers that contain existing fiber-optic or coaxial cables.

Install heat shrink tubing retrofit kits in existing risers as specified.

Use separate 1/2" riser with weatherhead for pedestrian pushbutton.

Use separate 1" riser with weatherhead for electrical service.

Use separate 2" riser with weatherhead for signal cables (bundled). Use separate 2" riser with weatherhead for the combination of all lead-in and twisted-pair communications cable. Install condulet on all risers for lead-in cable.

Install condulets on risers for lead-in cable, railroad preempt interconnection cables and signal pedestals.

Use separate 2" riser with heat shrink tubing for fiber-optic communications cables and coaxial cable. Install risers with heat shrink tubing so that cable can be installed without violating its minimum bending radius. Install cable so it does not share a riser with any other cable.

Install heat shrink tubing in accordance with manufacturer's recommendations. Provide tubing a minimum of 5" in length with a minimum of 2.5" extended over cables and 2.5" extended over risers after heat has been applied. Use nylon filler rods with UV protection or equivalent and sealing spacer clips to separate cables where multiple cables enter a riser. Ensure sealing spacer clips have a heat activated sealing compound with the sealing compound fully encapsulating the space between cables. Ensure heat shrink tubing provides a watertight fit around individual cables and outer walls of risers. Do not use cut sections of cable or any other devices instead of filler rods. Use aluminum tape around cables to prevent damage from sealing chemicals. Use a heat source that will provide even heat distribution around tubing. Ensure no damage occurs to any cables.

Bond new risers, a minimum of 10 ft above grade, to the pole ground using a #6 AWG minimum solid bare copper wire and an approved pipe clamp, a split bolt connector or parallel groove clamp. On pole mounted cabinets where the riser are connected to the cabinet, bond risers in the cabinet using ground bushings with a #6 AWG minimum solid bare copper wire to the cabinet ground bus.

If a pole ground exists on the joint use pole, bond new riser to existing pole ground using #6 AWG minimum solid bare copper wire terminated with split bolt connectors or parallel groove clamp.

If existing poles do not have a grounding system, install new grounding system that complies with Article 1720-3 of the Standard Specifications for bonding messenger cable.

Transition from rigid galvanized steel risers to underground PVC conduits using an approved rigid galvanized steel sweeping elbow with PVC female adaptor.

7.4. MEASUREMENT AND PAYMENT

__" Riser with ____ will be measured and paid as the actual number of risers of each type and size furnished, installed and accepted. No measurement will be made of weatherheads, heat shrink tubing or pole attachment fittings as these will be incidental to furnishing and installing risers.

Heat Shrink Tubing Retrofit Kit will be measured and paid as the actual number of heat shrink tubing retrofit kits furnished, installed and accepted.

Payment will be made under:

2" Riser with Weatherhead .....Each

Heat Shrink Tubing Retrofit Kit .....Each

8. ELECTRICAL SERVICE

8.1. DESCRIPTION

Install new electrical service and modify existing electrical service where required by the Plans.

Coordinate all work involving electrical service with the appropriate electrical utility company. Ascertain the practicality of installing new electrical service at locations shown in the Plans before performing any work.

8.2. MATERIAL

A. Electrical Service

Furnish external electrical service disconnects with single pole 50 A inverse time circuit breaker with at least 10,000 RMS symmetrical amperes short circuit current rating in a lockable NEMA 3R enclosure. Ensure service disconnects are listed as meeting UL Standard UL-489 and marked as being suitable for use as service equipment. Fabricate enclosure from galvanized steel and electrostatically apply dry powder paint finish, light gray in color, to yield a minimum thickness of 2.4 mils. Provide ground bus and neutral bus with at least 4 terminals with minimum wire capacity range of number 14 through number 4.

Furnish NEMA Type 3R meter base rated 100 A minimum that meets the requirements of the local utility. Provide meter base with ampere rating of meter sockets based on sockets being wired with insulated wire rated at least 167°F.

Furnish 4 terminal, 600 volt, single phase, 3 wire meter base with the following:

(1) Line, Load and Neutral Terminals accept #8 to 2/0 AWG Copper/Aluminum wire,

(2) Ringed or Ringless Type, with or without bypass,

(3) Made of galvanized steel,

(4) Listed as meeting UL Standard UL-414, and

(5) Overhead or underground service entrance as specified.

Ensure meter bases have electrostatically applied dry powder paint finish, light gray in color, with minimum thickness of 2.4 mils.

Furnish 1" watertight hub for threaded rigid conduit with meter base.

If meter base and electrical service disconnect are supplied in the same enclosure, ensure assembly is marked as being suitable for use as service equipment. Ensure combination meter and disconnect mounted in a pedestal for underground service is listed as meeting UL Standard 231. Otherwise, ensure combination meter and disconnect is listed as meeting UL Standard 67.

B. Grounding Electrodes

Provide grounding electrodes of the following types as indicated in the specifications and plans.

1. Ground Rods

Provide 5/8" diameter, 10 ft long, copper-clad steel ground rods with 10 mil thick copper cladding.

2. Sectional Ground Rods

Provide sectional ground rods comprised of 5/8" diameter, 10 ft long, steel ground rods with 10 mil thick copper cladding, welded together in a butt configuration with an exothermic weld. As an alternative, provide UL listed bronze couplers designed to connect 5/8" diameter copper-clad steel rods. Do not use threaded ground rods or threaded couplers. Provide minimum lengths required by plans.

8.3. CONSTRUCTION METHODS

A. Utility Services

Coordinate all work to ensure electrical power of proper voltage, phase, frequency and ampacity is available to complete the work. Use electrical services cables with THWN insulation.

When electrical, telephone and telecommunication service is not furnished by the Department and is required, contact the utility company and make application to ensure all work can be completed. Obtain authorization for service in the Department's name and make application for service in the Department's name along with the associated NCDOT Asset Inventory Number shown in the contract. Notify the Engineer immediately if this number is not shown in the contract.

The Department will be responsible for direct payment of monthly utility company usage charges. The Contractor will be responsible for all expenses associated with utility installation costs, hookups, etc.

B. New Electrical Service

At new CCTV locations shown in the Plans, install new electrical service. After installation of the meter base, the utility company will transfer the existing meter or install a new meter if required and make any necessary connections to the power lines.

C. Modify Existing Electrical Service

At traffic signal locations shown in the Plans, modify the existing electrical service to include an external electrical service disconnect. Install a new grounding system if the existing system does not meet the grounding requirements in the Standard Specifications.

D. Grounding of Electrical Services

In addition to NEC requirements, test grounding electrode resistance for a maximum of 20 ohms. Furnish and install additional ground rods to grounding electrode system as necessary to meet test requirements.

Modify existing electrical services, as necessary, to meet the grounding requirements of the NEC, these Project Special Provisions, the Standard Specifications and the project Plans. Remove any ground rods in the cabinet foundation and install a new grounding electrode system. Cut off abandoned ground rods in the cabinet foundation flush with the foundation surface. Where a grounding electrode system is connected to the electrical service in accordance with the NEC, test grounding electrode resistance for a maximum of 20 ohms. Grounding electrode resistance test shall be verified or witnessed by the Engineer or the Engineer's designated representative. Furnish and install additional ground rods to grounding electrode system as necessary to meet the Project Special Provisions and Standard Specifications and test requirements.

Follow test equipment's procedures for measuring grounding electrode resistance. When using clamp-type ground resistance meters, readings of less than one ohm typically indicate a ground loop.

Rework bonding and grounding circuits as necessary to remove ground loop circuits and retest. If a ground loop cannot be identified and removed to allow the proper use of a clamp-type ground resistance meter, use the three-point test method.

Submit a completed Inductive Loop & Grounding Test Form available on the Department's website.

https://connect.ncdot.gov/resources/safety/Pages/ITS-and-Signals.aspx

Provide a length of marker tape 6" to 12" below finished grade directly over grounding electrodes and conductors.

8.4. MEASUREMENT AND PAYMENT

New Electrical Service will be measured and paid as the actual number of services furnished, installed, and accepted.

No measurement will be made of riser assemblies, meter bases, service disconnects, underground and exposed conduit runs to the cabinet, acquisition of service fees, electrical service conductors, ground wire and any remaining hardware and conduit to connect the electrical service to the cabinet as these are incidental to furnishing and installing new electrical service.

Modify Existing Electrical Service will be measures and paid as the actual number of existing services modified and accepted.

5/8" x 10' Grounding Electrode (ground rod) will be measured and paid as the actual number of 5/8" copper clad steel ground rods furnished, installed, and accepted as part of grounding systems for new and modified electrical services and equipment cabinet change-outs. No separate payment will be made for #4 AWG solid bare copper grounding conductors or exothermic welding kits as they will be considered incidental to furnishing and installing the ground rod. No measurement and payment for grounding electrodes furnished and installed for purposes other than electrical service grounding systems.

No measurement will be made of riser assemblies, underground and exposed conduit runs to the cabinet, electrical service conductors, ground wire and any remaining hardware and conduit to modify the electrical service to the cabinet as these are incidental to modifying existing electrical service. No separate measurement or payment will be made for extending or replacing electrical service or signal cable and conduits.

Payment will be made under:

New Electrical Service.....Each
Modify Existing Electrical Service.....Each
5/8" x 10' Grounding Electrode.....Each

9. ELECTRICAL SERVICE AND CABINET FOUNDATIONS FOR DOWNTOWN TRAFFIC SIGNALS

9.1 DESCRIPTION

Install new electrical service equipment, electrical service conduit, integrated base adapters and other items as shown in the Plans for traffic signal cabinets located in downtown Salisbury. Provide traffic control for extended periods of time while the traffic signal electrical service and foundation are being modified.

NORTH CAROLINA PROFESSIONAL SEAL 023919 ENGINEER GREGORY A. FULLER
6-24-13

Comply with the National Electrical Code (NEC), the National Electrical Safety Code (NESC), the NCDOT 2012 Standard Specifications, the Project Special Provisions and all local ordinances.

Provide _5_ day's notification to the City of Salisbury, Salisbury Police Department and Engineer as to when the traffic signal is to be turned off.

Prepared by:
N.C. Department of Transportation
Intelligent Transportation Systems Section
750 N. Greenfield Parkway
Garner, NC 27529

Do not replace more than one downtown cabinet and foundation at a time. Complete all work at each location and have power restored to the traffic signal before beginning work at any other downtown location.

Modify existing foundations in accordance with the Plans and Project Special Provisions. At locations where sidewalk, decorative brick pavers, surface treatments or landscaping treatments are removed or damaged as part of the cabinet foundation installation, replace and restore to pre-construction condition using same material. Contractor shall take a digital photograph of each location to document pre-construction conditions. Avoid damaging existing conduit, conductors and fiber optic cable.

9.2 INTEGRATED BASE ADAPTER

(A) Description

Install base adapter with integrated electrical service meter and disconnect at the following locations in downtown Salisbury.

09-0214	Innes @ Church	09-0224	Main @ Council
09-0220	Main @ Horah	09-0225	Main @ Liberty
09-0221	Main @ Bank	09-0226	Main @ Kerr
09-0222	Main @ Fisher	09-0231	Innes @ Lee
09-0223	Main @ Innes	09-0236	Innes @ Depot

The adapter and electrical service equipment shall be a single, integrated piece with separation between the electrical service equipment and traffic signal cabinet.

(B) Materials

Fabricate integrated base adapters from the same materials and with the same finish as cabinet housing. Fabricate base adapter and extender in the same manner as controller cabinets, meeting all applicable specifications as defined in the city of Los Angeles' Specification No. 54-053-08, *Traffic Signal Cabinet Assembly Specification* (dated July 2008). Provide integrated base adapters with **a maximum height of 12 inches**. Provide meter column sized to house at a minimum one (1) 1.25 inch Liquidtight Flexible Nonmetallic Conduit with connectors and one (1) 1 inch Liquidtight Flexible Nonmetallic Conduit with connectors.

(C) Construction Methods

Ensure that a new Model 332 base mounted cabinet will mount directly to the integrated base adapter. Install conduits, feeder conductors and service conductors as shown on the plans. Ensure that cabinet doors open fully.

Use permanent, flexible waterproof sealing material to:

- Seal between cabinet base and integrated base adapter,
- Seal space between integrated base adapter and foundation or sidewalk.

9.3 ELECTRICAL SERVICE

(A) Description

Install new electrical service where required by the plans. Coordinate all work involving electrical service with Duke Energy and the City of Salisbury.

(B) Materials

Material, equipment and hardware furnished under this section must be pre-approved on the Department's QPL by the date of equipment installation.

Provide, reuse, revise and/or upgrade all materials necessary to form a complete electrical service assembly as shown in the plans. Furnish new external electrical service disconnects, meter bases, feeder conductors, electrical service conductors and conduits between the disconnects and the controller cabinets as required.

Furnish external electrical service disconnects with one single-pole 50 ampere circuit breaker with a minimum of 10,000 RMS symmetrical amperes short circuit current rating in a lockable NEMA 3R enclosure. Ensure service disconnects are listed as meeting UL Standard UL-489 and marked as being suitable for use as service equipment. Fabricate enclosure from galvanized steel and electrostatically apply dry powder paint finish, light gray in color, to yield a minimum thickness of 2.4 mils. Provide ground bus and neutral bus with a minimum of four (4) terminals with minimum wire capacity range of # 14 through # 4.

Furnish NEMA Type 3R meter base rated 100 ampere (minimum) that meets the requirements of the local utility. Provide meter base with socket's ampere rating based on sockets being wired with minimum of 167 degrees F insulated wire. Furnish 4 terminal, 600 volt, single phase, 3 wire meter base that complies with the following:

- Line, Load, and Neutral Terminals accept #8 to 2/0 AWG Copper/Aluminum wire
- With or without horn bypass

- Made of galvanized steel
- Listed as meeting UL Standard UL-414
- Overhead or underground service entrance as specified

Ensure meter bases have electrostatically applied dry powder paint finish, light gray in color, with minimum thickness of 2.4 mils.

If meter base and electrical service disconnect are supplied in the same enclosure (i.e., combination panel), ensure assembly is marked as being suitable for use as service equipment. Ensure combination panel mounted in a pedestal for underground service is listed as meeting UL Standard UL-231. Otherwise, ensure combination panel is listed as meeting UL Standard UL-67.

Provide a new grounding system at each traffic signal cabinet. In addition to NEC requirements, test grounding electrode resistance for a maximum of 20 ohms. Follow test equipment's procedures for measuring grounding electrode resistance. Furnish and install additional ground rods to grounding electrode system as necessary to meet test requirements. Submit a completed Inductive Detection Loop & Grounding Test Results form. The form is located on the Department's website at:

http://www.ncdot.gov/doh/preconstruct/traffic/ITSS/ws/signal_data.xls

Provide a length of marker tape 6 to 12 inches below finished grade directly over grounding electrodes and conductors.

(C) Construction Methods

Coordinate with Duke Energy and the City of Salisbury for service disconnection and re-connection to limit the time the traffic signal will be out of service.

Furnish and install new external service disconnect (breaker box). Route the electrical service conductors through the meter base and service disconnect to the controller cabinet to form a complete electrical service assembly as shown in the plans.

Provide Engineer with a copy of all permits and final inspections if required.

Comply with Section 825 of the 2012 Standard Specifications for Roads and Structures regarding Incidental Concrete Construction.

Replacement sidewalk, where required to restore locations to pre-construction condition, shall be replaced in **whole panels** and shall meet the requirements of Section 848 of the Standard Specifications.

Replacement brick pavers, where required to restore locations to pre-construction condition, shall be of the same color and materials of the damaged or modified items.

Replacement of other special pavement treatments or landscaping, where required to restore locations to preconstruction condition, shall be the same materials of the damaged or modified items.

9.4 OVERVIEW OF WORK BY LOCATION

Listed is a summary of the work to be completed at each location. Other items and material may be needed. Signal plans and cable routing plans may call for additional work and material. **Whenever sidewalk is to be removed, "Option 2" shall be used as the preferred method of grounding.**

09-0214 Innes @ Church
09-0236 Innes @ Depot
09-0220 Main @ Horah
09-0222 Main @ Fisher *(Existing sidewalk used for foundation)*
09-0226 Main @ Kerr
09-0225 Main @ Liberty

- Remove existing cabinet leaving all conduits in place.
- Protect existing conduits and conductors.
- Cut existing ground rod(s) and anchors flush to existing foundation surface.
- Provide entrance for a new grounding electrode conductor to ground the electrical service.
    - Option 1 for grounding:
      Install a new insulated (green) #4 AWG stranded copper Type THWN grounding electrode conductor into the existing fiber optic cable conduit to nearest junction box containing fiber optic cable located outside the cabinet foundation. Protect the existing fiber optic from damage. Install new ground rods in junction box (use sectional ground rods) and exothermically weld grounding electrode conductor to ground rod(s). Shield, guard and protect the existing fiber optic cable from the welding process.
    - Option 2 for grounding:
      Core drill the existing foundation for a new 1 inch conduit to extend outside the cabinet foundation. Install new ground rods (sectional ground rods may be used) and exothermically weld grounding electrode conductor to ground rod(s) using a #4 AWG solid bare copper wire. Ground the electrical service as shown in the plans. Where sidewalk, decorative brick pavers, or surface treatments or landscaping treatments are removed or damaged as part of the cabinet grounding or conduit installation, replace and restore the area to pre-construction condition using same material.
- Install new 332 base mounted cabinet with integrated base adapter over existing conduits and conductors.
- Insert existing service conductors into a new 3/4 inch Liquidtight Flexible Nonmetallic Conduit (LFNC). Slide new 3/4 inch LFNC into the existing conduit a minimum of 12 inches. Run new 3/4 inch LFNC up into meter column. Secure new 3/4 inch LFNC to meter/disconnect column, base adapter and cabinet. Install connectors and bushings as required. If required, splice and extend existing service conductors. Use pre-insulated irreversible compression connectors, appropriately sized to splice or extend existing service conductors. Where required, the LFNC will need to be up-sized accordingly.
- Install 1 inch LFNC from new disconnect through the meter/disconnect column to the cabinet. Secure 1 inch LFNC to meter/disconnect column, base adapter and cabinet.

Install two (2) #8 AWG stranded copper Type THWN feeder conductors and one (1) #6 AWG stranded copper Type THWN grounding conductor into the 1 inch LFNC. Identify the grounded conductor in accordance with NEC. Install connectors and bushings as required.

- Ensure all conduits are bonded and seal all conduits in cabinet using moldable duct seal.

Whenever sidewalk is to be removed, "Option 2" shall be used as the preferred method of grounding.

09-0231 Innes @ Lee
09-0223 Main @ Innes

- Remove existing cabinet leaving all conduits in place.
- Protect existing conduits and conductors.
- Cut existing ground rod(s) and anchors flush to existing foundation surface.
- Provide entrance for a new grounding electrode conductor to ground the electrical service.
    - Option 1 for grounding:
      Install a new insulated (green) #4 AWG stranded copper Type THWN grounding electrode conductor into the existing fiber optic cable conduit to nearest junction box containing fiber optic cable located outside the cabinet foundation. Protect the existing fiber optic from damage. Install new ground rods in junction box (use sectional ground rods) and exothermically weld grounding electrode conductor to ground rod(s). Shield, guard and protect the existing fiber optic cable from the welding process.
    - Option 2 for grounding:
      Core drill the existing foundation for a new 1 inch conduit to extend outside the cabinet foundation. Install new ground rods (sectional ground rods may be used) and exothermically weld grounding electrode conductor to ground rod(s) using a #4 AWG solid bare copper wire. Ground the electrical service as shown in the plans. Where sidewalk, decorative brick pavers, or surface treatments or landscaping treatments are removed or damaged as part of the cabinet grounding or conduit installation, replace and restore the area to pre-construction condition using same material.
- Install new 1 inch rigid galvanized steel conduit for Pedestrian head(s) on steel pole adjacent to cabinet. Core drill the existing foundation for a new 1 inch conduit to extend outside the cabinet foundation to steel pole. Install new rigid galvanized steel conduit on the outside of steel pole to within 2 -3 feet of the Pedestrian head(s). Bend and place conduit to fit neatly against steel pole. Band conduit to pole. Use 1 inch Liquidtight Flexible Nonmetallic Conduit from new conduit to bottom of the Pedestrian bracket. <u>Do not band, drill or attach to base of steel pole. Install new conduit so as not to block access to hand hole(s).</u> Remove existing Pedestrian wire, conduit, conduit bodies (i.e., LB's) nipples and connectors from steel pole. Ensure the existing conduit is removed below grade. Where sidewalk, decorative brick pavers, or surface treatments or landscaping treatments are removed or damaged as part of the cabinet grounding or conduit installation, replace and restore the area to pre-construction condition using same material.

- Install new 332 base mounted cabinet with integrated base adapter over existing conduits and conductors.
- Insert existing service conductors into a new 3/4 inch Liquidtight Flexible Nonmetallic Conduit (LFNC). Slide new 3/4 inch LFNC into the existing conduit a minimum of 12 inches. Run new 3/4 inch LFNC up into meter column. Secure new 3/4 inch LFNC to meter/disconnect column, base adapter and cabinet. Install connectors and bushings as required. If required, splice and extend service conductors. Use pre-insulated irreversible compression connectors, appropriately sized to splice or extend existing service conductors. Where required, the LFNC will need to be up-sized accordingly.
- Install 1 inch LFNC from new disconnect through the meter/disconnect column to the cabinet. Secure 1 inch LFNC to meter/disconnect column, base adapter and cabinet. Install two (2) #8 AWG stranded copper Type THWN feeder conductors and one (1) #6 AWG stranded copper Type THWN grounding conductor into the 1 inch LFNC. Identify the grounded conductor in accordance with NEC. Install connectors and bushings as required.
- Ensure all conduits are bonded and seal all conduits in cabinet using moldable duct seal.

Whenever sidewalk is to be removed, "Option 2" shall be used as the preferred method of grounding.

09-0221 Main @ Bank
09-0224 Main@ Council

- Remove existing cabinet leaving all conduits in place.
- Protect existing conduits and conductors.
- Cut existing ground rod(s) and anchors flush to existing foundation surface.
- Provide entrance for a new grounding electrode conductor to ground the electrical service.
    - Option 1 for grounding:
      Install a new insulated (green) #4 AWG stranded copper Type THWN grounding electrode conductor into the existing fiber optic cable conduit to nearest junction box containing fiber optic cable located outside the cabinet foundation. Protect the existing fiber optic from damage. Install new ground rods in junction box (use sectional ground rods) and exothermically weld grounding electrode conductor to ground rod(s). Shield, guard and protect the existing fiber optic cable from the welding process.
    - Option 2 for grounding:
      Core drill the existing foundation for a new 1 inch conduit to extend outside the cabinet foundation. Install new ground rods (sectional ground rods may be used) and exothermically weld grounding electrode conductor to ground rod(s) using a #4 AWG solid bare copper wire. Ground the electrical service as shown in the plans. Where sidewalk, decorative brick pavers, or surface treatments or landscaping treatments are removed or damaged as part of the cabinet grounding or conduit installation, replace and restore the area to pre-construction condition using same material.
- Install new 1 inch rigid galvanized steel conduit for Pedestrian head(s) located on the Pedestrian steel pole adjacent to cabinet. Core drill the existing foundation for a new 1

inch rigid galvanized steel conduit to extend outside the cabinet foundation to the Pedestrian steel pole. Remove existing sidewalk from cabinet base to Pedestrian steel pole. Install new conduit on the outside of Pedestrian steel pole to within 2 -3 feet of the Pedestrian head(s). Bend and place conduit to fit neatly against the Pedestrian steel pole. Band conduit to pole. Use 1 inch Liquidtight Flexible Nonmetallic Conduit from new conduit to bottom of the Pedestrian bracket. Remove existing Pedestrian wire, conduit, conduit bodies (i.e., LB's) nipples and connectors from the base of the traffic signal steel pole. Where sidewalk, decorative brick pavers, or surface treatments or landscaping treatments are removed or damaged as part of the cabinet grounding or conduit installation, replace and restore the area to pre-construction condition using same material.

- Install new 332 base mounted cabinet with integrated base adapter over existing conduits and conductors.
- Insert existing service conductors into a new 3/4 inch Liquidtight Flexible Nonmetallic Conduit (LFNC). Slide new 3/4 inch LFNC into the existing conduit a minimum of 12 inches. Run new 3/4 inch LFNC up into meter column. Secure new 3/4 inch LFNC to meter/disconnect column, base adapter and cabinet. Install connectors and bushings as required. If required, splice and extend service conductors. Use pre-insulated irreversible compression connectors, appropriately sized to splice or extend existing service conductors. Where required, the LFNC will need to be up-sized accordingly.
- Install 1 inch LFNC from new disconnect through the meter/disconnect column to the cabinet. Secure 1 inch LFNC to meter/disconnect column, base adapter and cabinet. Install two (2) #8 AWG stranded copper Type THWN feeder conductors and one (1) #6 AWG stranded copper Type THWN grounding conductor into the 1 inch LFNC. Identify the grounded conductor in accordance with NEC. Install connectors and bushings as required.
- Ensure all conduits are bonded and seal all conduits in cabinet using moldable duct seal.

9.5 MEASUREMENT AND PAYMENT

Electrical service and cabinet foundation for downtown traffic signal will be measured and paid for as the actual number of electrical services and cabinet foundations with associated integrated base adapters for downtown signals furnished, installed and accepted. No separate measurement or payment will be made for integrated base adapters, conduits, conduit extensions, foundations, removal and disposal of existing foundation, electrical service meters, disconnects, and associated wiring, service conductors, splicing and extending service conductors, feeder conductors, grounding, grounding electrodes, ground wire, connectors, rewiring of Pedestrian signals, acquisition of service fees or permits and any remaining hardware or fittings as this will be considered incidental to the Electrical Service and Cabinet Foundation for Downtown Traffic Signal. Concrete for sidewalk replacement and brick pavers shall be paid for elsewhere in the Project Special Provisions.

Payment will be made under:

Electrical Service and Cabinet Foundation for Downtown Traffic Signal	Each

10. TERMINAL SPLICE BOX

10.1. DESCRIPTION

Furnish, install, and integrate new terminal splice boxes at locations where existing pole-mounted signal cabinets are replaced with new base-mounted signal cabinets in the same quadrant as shown in the Plans. Provide materials and perform work to splice and extend signal conductors and loop lead-in cables where present.

10.2. MATERIAL

Furnish terminal splice box that is fabricated of steel or aluminum and satisfies the requirements of environmentally sealed NEMA Type 4X enclosures. Furnish terminal splice boxes with a minimum size of 12 inches wide by 20 inches high by 8 inches deep with a hinged cover which shall open to the side. Each terminal splice box shall have a terminal block having at least twenty (20) terminals with each terminal having two (2) terminal screws. The terminal screws shall be nickel-plated brass screws and have a minimum outside diameter of 4.3 mm. A removable sorting bar shall be provided between the screws of each terminal. The terminal block shall be of electrical grade thermoplastic or thermosetting plastic and shall have the terminals recessed between molded barriers. The terminal block shall be mounted on the back wall of the terminal splice box in such a manner that no mounting screws, nuts, etc. protrude through the box. The terminal block shall be centered on the back wall in line with the long dimension of the box. Install additional terminal blocks as necessary.

The terminal splice box shall have the following holes in the bottom. The box shall be furnished with weatherproof caps for all holes

- One (1) hole suitable for a 2 inch conduit, at the rear and centered.
- Two (2) holes which will accommodate 2 inch rigid metal conduits, one on either side of the hole described above. Each of these holes shall be provided with suitable cable entrance fittings which will both clamp the entering cables in place and protect their insulation from damage. These holes and their fittings shall be located so that the conduit hole between them can be fitted with a conduit hub without difficulty.

Furnish binder type terminal strips. Separate binder strips shall be furnished for signal wiring and loop lead-in.

10.3. CONSTRUCTION METHODS

Furnish terminal splice box with brackets suitable for attaching the box to wood poles banded attachments and screws and other attachment hardware as approved by the Engineer. The brackets shall facilitate a firm attachment to the pole. The design of the brackets shall be such that the conduit hubs and cable fittings shall not make mounting of the box difficult. At locations where the terminal splice box is to be attached externally to a metal strain pole, use banding method approved by the Engineer.

Bond terminal splice box to equipment ground in cabinet using a 14 AWG stranded THHN. Do not put loop grounds and other grounds with neutral conductors.

Additional signal conductors and loop lead-in cable shall be of the same size and type of the existing wires and cables. Provide permanent labels prior to construction on all incoming and outgoing conductors using a naming convention such as Phase One Green, Phase Two Yellow, Loops 2A, etc.

10.4. MEASUREMENT AND PAYMENT

Terminal Splice Box will be measured and paid as the actual number of terminal splice boxes furnished, installed, and accepted.

No measurement will be made of riser assemblies, underground and pole conduit, additional signal conductors, and loop lead-in, as the splicing of all existing signal conductor and loop lead-ins in the splice box, extending them through new risers and conduits, and connecting them to the new controller cabinet shall be incidental to furnishing and installing terminal splice boxes.

Drop Cable and Splice Enclosures required for extending existing fiber optic communications cable to the new controller cabinet will be measured and paid under the appropriate sections of these Project Special Provisions.

Payment will be made under:

Terminal Splice Box .....Each

11. LEAD -IN CABLE

11.1. DESCRIPTION

Furnish and install lead-in cable with all necessary hardware to be used in conjunction with, but not limited to, inductive detection loops, pedestrian pushbutton assemblies, APS assemblies or railroad circuitry.

11.2. MATERIAL

Furnish material, equipment and hardware under this section that is pre-approved on the ITS and Signals QPL.

Furnish lead-in cable with 2 conductors of number 14 AWG fabricated from stranded tinned copper that complies with IMSA Specification 50-2 except as follows:

(A) Ensure conductor is twisted with a maximum lay of 2.0" resulting in at least 6 turns per foot.

(B) Provide a ripcord to allow cable jacket to be opened without using a cutter.

Provide length markings in a contrasting color showing sequential feet and within 1% of actual cable length. Ensure character height of the markings is approximately 0.10".

11.3. CONSTRUCTION METHODS

For underground runs, install lead-in cable in 2" non-metallic conduit. For aerial installation, wrap lead-in cable to messenger cable with at least 4 turns of wrapping tape spaced at intervals less than 15" or lash lead-in cable to messenger cable with one 360° spiral of lashing wire per 12".

Where railroad preemption is required, install lead in cable from signal controller cabinet to railroad company furnished and installed lockable junction box.

Splicing of lead-in cable will be allowed only for runs in excess of 750 ft. Splice lead-in cable in junction boxes or condulets on poles.

Test each complete loop system from the controller cabinet by using a megger to verify that impedance from the loop system to the ground is at least 50 megaohms. After successful completion of megger test, test loop system resistance using an electronic ohmmeter to verify loop system resistance is less than 0.00885 ohms per foot.

11.4. MEASUREMENT AND PAYMENT

Lead-in Cable (____) will be measured and paid as the actual linear feet of lead-in cable furnished, installed and accepted. Measurement will be made by calculating the difference in length markings located on outer jacket from start of run to end of run for each run. Terminate all cables before determining length of cable run.

If markings are not visible, measurement will be point to point with no allowance for sag. Twenty-five feet will be allowed for vertical segments up or down poles.

Payment will be made under:

Lead-In Cable (14-2).....Linear Foot

12. ETHERNET CABLE

12.1. DESCRIPTION

Furnish and install Ethernet cable to serve as interconnect between Ethernet switches and/or field devices routed in underground conduit.

12.2. MATERIAL

Furnish CAT5E Ethernet cable that is suitable for outdoor installation and meets or exceeds the following standards:

- 4-pair shielded twisted pair cable
- 24AWG (minimum) solid bare copper conductor
- Meets or exceeds CAT5E specifications
- High-density polyethylene insulation, PVC jacket
- Compliant with EIA/TIA standards
- UL/CSA listed
- UV Stabilized PE Jacket
- Gel Filled
- Meets TIA/EIA 568B.2 Networking Standard
- Supports 10/100/1000/10,000Mbps
- Mean Power Sum for Equal Level Fare End Crosstalk (ELFEXT): 45dB/kft (minimum) at 772kHz
- Worst Pair Power Sum for ELFEXT: 40dB/kft (minimum) at 772kHz
- Mean Power Sum for Near-end Crosstalk (NEXT): 42dB/kft (minimum) at 772 kHz
- Operating Temperature: Rated from -10 to +60 Celsius
- Average mutual capacitance: 90nf/mile (maximum)

Have the manufacturer factory test the Ethernet cable on reels for each pair's mutual capacitance, crosstalk loss, insulation resistance, and conductor resistance. Furnish the Engineer with a certified report for each reel showing compliance with these Project Special Provisions, the factory test results, and the manufactured date of the cable. The contractor shall not use Ethernet cable manufactured more than one year before the date of installation.

Cables where both ends will terminate in an RJ-45 connector, both ends should be installed with punchdown female jacks at both ends of the factory-manufactured cable, to be connected at both ends with short 3-6' patch cables.

Cable length with end patch connectors shall not exceed 295 feet.

12.3. CONSTRUCTION METHODS

A. General

Install Ethernet cable on new or existing messenger cable and in conduits at locations shown in the Plans. Allow a minimum of 10 feet (3 meters) of cable slack.

Ethernet cables shall not be spliced.

All cables shall be labeled with water proof, smear resistant labels that denote the equipment cabinets or housing they are run from and the device and identifier for that device they are connected to (e.g. CCTV Cabinet 31; CODEC at CCTV Cabinet 31).

B. Underground Installation

Install underground Ethernet cable in conduit described in these Special Provisions and as shown in the Plans.

The contractor shall not exceed 80 percent of the manufacturer's maximum pulling tension when installing underground Ethernet cable. Use a clutch device (dynamometer) so as not to exceed the allowable pulling tension if the cable is pulled by mechanical means. Do not use a motorized vehicle to generate cable-pulling forces.

Keep tension on the cable reel and the pulling line at the start of each pull. Do not release the tension in the cable if the pulling operation is halted. Restart the pulling operation by gradually increasing the tension until the cable is in motion.

12.4. MEASUREMENT AND PAYMENT

Ethernet Cable will be measured and paid as linear feet of outdoor rated Ethernet cable furnished, installed, and accepted. Sag and vertical segments will not be paid for as these distances are considered incidental to the installation of the cable.

Ethernet cabling installed within equipment cabinets, within rooms, and within buildings are incidental and will not be paid for under this item.

No measurement will be made for terminating and testing of the cable, connectors, cable identification markers, and grounding, as these will be considered incidental to the installation of the Ethernet cable.

Payment will be made under:

Ethernet Cable.....Linear Feet

13. F IBER-OPTIC CABLE

13.1. DESCRIPTION

Furnish and install single mode fiber-optic (SMFO) communications cable and drop cable assemblies, fiber-optic cable storage racks (snow shoes), communications cable identification markers, lashing wire and all necessary hardware.

13.2. MATERIAL

A. General

Furnish material, equipment and hardware under this section that is pre-approved on the ITS and Signals QPL.

B. SMFO Communications Cable

Furnish single mode fiber-optic cable manufactured into a loose buffer tube design, installed around a central strength member where the cable complies with RUS CFR 1755.900 and ICEA 640 requirements. Ensure the Manufacture is ISO 9001 and TL9000 registered and that the manufacturer's cable is RUS listed. The operating temperature range of the cable shall be -40°F to +158°F.

Furnish individual fibers manufactured from silica and dopant materials with each fiber having a color coated finish that is compatible with local injection detection (LID) devices. Distinguish each fiber from others by color coding that meets EIA/TIA-598. Furnish single mode fiber that does not exceed attenuation ratings of 0.25 dB/km at 1550 nm and 0.35 dB/km at 1310 nm and complies with ITU G.652D and IEC 60793-2-50 Type B.1.3 industry standards for low water peak, single mode fiber. Provide fibers that are useable and with a surface, sufficiently free of imperfections and inclusions to meet optical, mechanical and environmental requirements.

Ensure the core central strength member is a dielectric glass reinforced rod and that the completed cable assembly has a maximum pulling rating of 600 lbf during installation (short term) and 180 lbf long term installed.

Construct buffer tubes (nominal size of 2.5 mm) manufactured from a polypropylene copolymer material to provide good kink resistance and allows the buffer tube to maintain flexibility in cold temperature over the expected lifetime of the cable. Ensure that buffers tubes contain no more than 12 fibers per buffer tube unless specified otherwise, and that all buffer tubes are filled with a water blocking gel or water swellable material. Construct the cable such that the buffer tubes are stranded around the central strength member in a reverse oscillating arrangement to allow for mid-span entry. Distinguish each buffer tube from others by color coding that meets EIA/TIA-598. Use filler tubes to maintain a circular cross-section of the cable. Ensure the filler tubes are the same nominal size as the buffer tubes of 2.5 mm. Apply binders (water swellable yarn, kevlar, etc.) with sufficient tension to secure buffer tubes and filler tubes to the central member without crushing the buffer tubes. Ensure that binding material is non-hygroscopic, non-wicking and dielectric with low shrinkage. Ensure the binders are of a high tensile strength that is helically stranded evenly around cable core.

Ensure the cable core is protected from the ingress of moisture by a water swellable material or that is filled with a water blocking compound that is non-conductive. Ensure the water swellable material (when activated) or the water blocking compound is free from dirt and foreign matter and is

removable with conventional nontoxic solvents. Furnish at least one ripcord to aid in the process of removing the outer jacket. Furnish the outer jacket constructed of a medium-density polyethylene material to provide reduced friction and enhanced durability. Ensure the polyethylene material contains carbon black to provide UV protection and does not promote the growth of fungus. Ensure the cable jacket is free of slits, holes or blisters and the nominal outer jacket thickness is > 0.050".

Ensure the completed cable assembly contains identification markings printed along the outside cover of the jacket every 2 ft. Ensure the character height of the markings is approximately 0.10". Provide length markings in sequential feet and within 1% of actual cable length.

Mark each cable with the following:

1) Sequential length marks in feet as specified
2) The name of the manufacturer
3) "OPTICAL CABLE"
4) Month/year of manufacture
5) Number(s) of and type(s) of fibers
6) Cable ID Number for product traceability

C. Drop Cable

Furnish drop cable meeting the material requirements listed above for SMFO communications cable with the exceptions herein to provide communications links between splice enclosures and through interconnect centers. Furnish drop cable containing at least 6 individual fibers.

Furnish drop cable that complies with RUS-CFR 1755.900 and is RUS listed. Ensure each drop cables has the same operating characteristics as the SMFO cable it is to be coupled with.

On one end of cable furnish six ST-PC connectors for termination on connector panel in equipment cabinet. Provide either factory assembled drop cables with ST-PC connectors or field installed connectors. No connectors are required for drop cables running from one splice enclosure directly to another splice enclosure.

Ensure attenuation of drop cable at 1310 nm does not exceed 0.4 dB/km and the attenuation at 1550 nm does not exceed 0.3 dB/km. Ensure attenuation loss for complete drop cable assembly does not exceed a mean value of 1.5 dB.

D. Communications Cable Identification Markers

Furnish yellow communications cable identification markers that are resistant to fading when exposed to UV sources and changes in weather. Use markers designed to coil around fiber-optic cable that do not slide or move along the surface of the cable once installed. Ensure exposure to UV light and weather does not affect the markers natural coiling effect or deteriorate performance. Provide communications cable wraps that permit writing with an indelible marking pen and contain the following text in black:

WARNING
CITY OF SALISBURY FIBER OPTIC CABLE
CONTACT TELEPHONE NUMBER:
(704) 638-5269
WARNING
FIBER OPTIC CABLE

Overall Marker Dimensions: 7"(l) x 4"(w)

Lettering Height: 3/8"for WARNING, 1/4" for all other lettering

Submit a sample of proposed communications cable identification markers to the Engineer for approval before installation.

E. Fiber-Optic Cable Storage Guides

Furnish fiber-optic storage guides (snowshoes) that are non-conductive and resistant to fading when exposed to UV sources and changes in weather. Ensure snowshoes have a captive design such that fiber-optic cable will be supported when installed in the rack and the minimum bending radius will not be violated. Provide stainless steel attachment hardware for securing snowshoes to messenger cable and black UV resistant tie-wraps for securing fiber-optic cable to snowshoe. Ensure snowshoes are stackable so multiple cable configurations are possible.

F. Pole Line Hardware

Provide universal grade strandvises used for extra high strength steel messenger cable.

Provide other pole line hardware constructed of hot-dipped galvanized steel conforming to ASTM A153.

Provide machine bolts, eyebolts and thimble eye bolts with minimum tensile strength of 12,400 lb. Provide hot-dipped galvanized nuts, 3" x 3" curved square washers and thimbleyelets.

Provide suspension clamp fabricated from hot-dipped galvanized steel with minimum length of 5 3/4". Ensure clamp has a groove rated for the messenger cable size it is intended to secure. Provide J-hook fabricated from 3/8" thick hot-dipped galvanized steel flat or oval stock with sufficient hook radius to cradle 11/16" diameter cable. Provide two 1/2" diameter hot-dipped galvanized bolts and nuts to tighten the clamp around the messenger cable. Provide one 5/8" diameter hot-dipped galvanized bolt of sufficient length to attach J-hook and clamp to the wood pole with a 3" x 3" curved square washer and double nuts.

Provide 3-bolt clamp fabricated from hot-dipped galvanized steel with minimum length of 5 3/4". Ensure clamp has 2 parallel grooves rated for the messenger cable size it is intended to secure. Provide three 5/8" diameter hot-dipped galvanized bolts and nuts to tighten the clamp around the messenger cable.

Provide parallel groove clamp consisting of high strength, high conductivity non-copper bearing aluminum alloy clamp halves with interlocking fingers to prevent mismatch. Ensure clamp halves have molded grooves to secure #8-1/0 AWG stranded copper wires. Provide clamps with grooves prefilled with antioxidant joint compound. Provide 3/8" hex head, square shank, galvanized steel bolt with galvanized steel lock washer and nut.

Provide 1/2" and 3/4" wide, .030" thick Type 316 stainless steel straps with Type 316 stainless steel buckles.

Provide either 0.05" x 0.30" aluminum wrapping tape or 0.06" diameter Type 316 stainless steel lashing wire for lashing cables to messenger cable. Ensure aluminum wrapping tape is 1350 alloy, O-temper, with 12,800 psi tensile strength. Use 0.045" diameter Type 316 stainless steel lashing wire to lash fiber-optic communications cable to messenger cable.

Provide hot-dipped galvanized steel clamp with groove sized for 1/4" to 3/8" messenger cable for securing lashing wire(s) to messenger cables at ends of each spiraled run. Ensure clamp hardware is hot-dipped galvanized steel.

13.3. CONSTRUCTION METHODS

A. General

Provide cable manufacturer's attenuation and Optical Time Domain Reflectometer (OTDR) testing data for each reel of cable upon request.

Install SMFO communications cable, snow shoes, communications cable identification markers, lashing wire and all necessary hardware.

Comply with manufacturer's recommendations. Install communications cable on signal poles, utility poles, messenger cable and in conduits as required to bring the fiber-optic cable into and, if necessary, out of each splice enclosure.

Take all precautions necessary to ensure cable is not damaged during storage, handling and installation. Do not violate minimum bending radius of 20 times the radius of cable diameter or manufacturer's recommendation, whichever is greater. Do not step on cable nor run over cable with vehicles or equipment. Do not pull cable over or around obstructions or along the ground.

Determine lengths of cable necessary to reach from termination-point to termination point. Install cable in continuous lengths between approved splicing facilities. Additionally, provide a sufficient amount of slack cable to allow for an additional 20 ft of cable to be present after removal of outer sheath for termination. Measure slack cable by extending cable straight out of cabinet door.

Keep cable ends sealed at all times during installation to effectively prevent the ingress of moisture. Use approved heat shrink cable end cap. Do not use tape to seal cable ends.

Before installing cable, provide 3 copies of cable manufacturer's recommended and maximum pulling tension. Do not exceed manufacturer's recommended pulling tension. Use pulling grips containing a rotating swivel. Coil cable in a figure-8 configuration whenever cable is unreeled for subsequent pulling.

Install fiber-optic cable in separate 2" risers with heat shrink tubing or conduits. Do not share risers or conduits containing fiber-optic cable with other type cable.

B. Aerial Installation

Double lash fiber-optic cable to messenger cable with one 360° spiral per foot.

Use pole attachment hardware and roller guides with safety clips to install aerial run cable.

Maintain tension during the pulling process for aerial run cable by using an approved mechanical clutch (dynamometer) device. Do not allow cable to contact the ground or other obstructions between poles during installation. Do not use a motorized vehicle to generate cable pulling forces.

Use a cable suspension clamp when attaching cable tangent to a pole. Select and place cable blocks and corner blocks so as not to exceed the cable's minimum bending radius. Do not pull cable across J-hooks.

Store 100 ft of each fiber-optic cable on all cable runs that are continuous without splices where specified. Obtain approval for spare cable storage locations. Store spare fiber optic cable on fiber-optic cable storage racks (snow shoes). Locate spare cable storage in the middle of spans between termination points. Do not store spare fiber-optic cable over the roadway or driveways.

Install one communications cable identification marker within 36" of pole attachment points and at locations where more than one cable originates or terminates.

C. Underground Installation

Install fiber-optic cable underground in conduit using cable pulling lubricants recommended by the fiber-optic cable manufacturer.

Obtain approval of cable pulling lubricant and method of pulling before installing underground fiber-optic cable.

Use a dynamometer (clutch device) so as not to exceed maximum allowable pulling tension if cable is pulled by mechanical means. Do not use a motorized vehicle to generate cable pulling forces.

Keep tension on cable reel and pulling line at start of each pull. Do not release tension if pulling operation is halted. Restart pulling operation by gradually increasing tension until cable is in motion.

For pulling cable through manholes, junction boxes and vaults, feed cable by manually rotating the reel. Do not pull cable through intermediate junction boxes, handholds or openings in conduit unless otherwise approved.

Install communications cable identification markers on each communications cable entering a junction box.

D. Installation of Drop Cable Assembly

Determine length of drop cable needed, including slack, to reach from termination point to termination point.

At aerial splice enclosures, store 100 ft of slack cable on cable storage racks. At below ground splice enclosures, coil 100 ft of slack cable in manhole or junction box where enclosure is located.

At equipment cabinet end of drop cable assembly, terminate all fibers with ST-PC connectors to the connector panel. Label all connectors, pigtails and the connector panel. At the aerial splice enclosure location, cap off all unused fibers and label to correspond with the connector panel.

13.4. MEASUREMENT AND PAYMENT

Drop Cable will be measured and paid as linear feet of fiber-optic drop cable assemblies furnished, installed and accepted. Sag and vertical segments will not be paid as these distances are incidental to the installation of drop cable assemblies.

No measurement will be made for terminating, splicing and testing fiber-optic cable, communications cable identification markers or fiber-optic cable storage racks, as these will be incidental to the installation of fiber-optic cable.

Payment will be made under:

Drop Cable .....Linear Foot

14. F IBER-OPTIC SPLICE CENTERS

14.1. DESCRIPTION

Furnish and install fiber-optic interconnect centers, fiber-optic splice enclosures and all necessary hardware.

Modify existing fiber optic interconnect centers and/or splice enclosures as shown in the plans. Refer to manufacturer's recommendations for opening, modifying and re-sealing the existing fiber optic interconnect center and/or fiber optic splice enclosures.

14.2. MATERIAL

A. General

Furnish material, equipment and hardware under this section that is pre-approved on the ITS and Signals QPL.

B. Interconnect Center

Furnish compact, modular interconnect centers designed to mount inside equipment cabinets. Design and size interconnect centers to accommodate all fibers entering cabinets. For locations where a single drop cable or two 12-fiber cables enter and terminate inside a cabinet, furnish standard-size interconnect centers with 12-position modules. For locations where more than two 12-fiber cables enter and terminate inside a cabinet, furnish over-sized interconnect centers with sufficient number of modules.

Provide splice trays that hold, protect, and organize optical fibers, and secure fibers inside splice tray. Design and size splice trays to be dielectric, to accommodate all fibers entering splice tray, and to provide sufficient space to prevent microbending of optical fibers. Provide connector panels with ST-type connectors.

Furnish SMFO pigtails with each interconnect center. Provide pigtails containing connector panels that are no more than 6 ft in length with a factory assembled PC-ST connector on one end. Ensure SMFO pigtails meet the operating characteristics of the SMFO cable with which it is to be coupled.

As needed to integrate equipment, furnish SMFO jumpers with factory assembled PC-ST connectors on each end and SMFO hybrid jumpers with a factory assembled ST connector on one end and a factory assembled LC connector on the other. Ensure SMFO jumpers are at least 3 feet in length and meet the operating characteristics of the SMFO cable with which it is to be coupled.

C. Splice Enclosure

Furnish splice enclosures that are re-enterable using a mechanical dome-to-base seal with a flash test valve, and are impervious to the entry of foreign material (water, dust, etc.). Ensure enclosures are manufactured so as to be suitable for aerial, pedestal, buried, junction box and manhole installation.

Provide enclosures with at least one over-sized oval port that will accept 2 cables and with at least 4 round ports (for single cables) that will accommodate all cables entering enclosure. Provide heat shrink cable shields with enclosure to ensure weather tight seal where each cable enters enclosure.

Within enclosures, provide enough hinged mountable splice trays to store the number of splices required, plus the capacity to house six additional splices. Provide a fiber containment basket for storage of loose buffer tubes expressed through the enclosure. Ensure enclosures allow sufficient space to prevent microbending of buffer tubes when coiled.

Provide splice trays that hold, protect, and organize optical fibers, and secure fibers inside splice tray. Provide splice trays that are dielectric.

14.3. CONSTRUCTION METHODS

A. General

Include on the cover of each slice tray in a legible format the following information:

1) Splice location reference number or identification information (i.e. 06-1011 tray 1 of 3, 06-1011 tray 2 of 3, etc.)
2) Date the splice was made
3) Company name of individual performing the splicing
4) Name of individual performing the splicing

B. Workmanship

Upon cutting the cable and removing the outer jacketing material down to the individual buffer tubes, secure the central strength member to the enclosure so that no tensile force is applied to the fibers. Secure the individual buffer tubes to the splice trays by a method recommended by the manufacturer. Determine the length of each buffer tube needed to ensure the buffer tube can be looped a minimum of two times around the inside the splice tray. Upon determining the length of buffer tube needed remove the buffer tube to expose the individual fibers for fusion splicing. Adjust individual fiber lengths as necessary to ensure that once the fusion splicing process is completed that the finished splices will align with the "splice block organizer" supplied within the splice tray. Ensure the slice block organizer has individual fusion splice space holders for each fiber splice.

While prepping the individual fibers for splicing install the heat shrink protecting tube over the fiber and then perform the splicing operations, following the manufacturer's instructions. Verify the newly formed splice does not exceed 0.05 dB of attenuation. If the attenuation is more than 0.05 dB then remake the splice until it meets the 0.05 dB or less requirement. Finish the splicing operation by sliding the heat shrink tube over the splice and applying heat to activate the heat shrink tubing. Secure the finished splice in the splice block organizer. Ensure each splice is properly secured in a space holder in the splice block organizer. Multiple splices secured to the same space holder are unacceptable.

Ensure all buffer tubes are contained within splice trays so no bare fibers are outside tray and do not damage the fiber or violate the minimum bending radius of the fiber.

Prior to installing the cover over the splice tray and placing it in its final resting location, take a MANDATORY digital photograph of the splice tray that shows the final workmanship. Ensure the photograph shows the "Workmanship Identification Information" as well as the workmanship associated with installing and terminating the fiber. Include digital copies of each photograph on a compact disk as part of the OTDR Test Results submittal.

C. Termination and Splicing within Interconnect Center

At locations shown in the Plans, replace the existing fiber optic interconnect center with a new interconnect center when replacing the signal cabinet and controller. The Contractor shall perform all work such that the existing fiber optic cable can be reused and the existing splicing configuration is maintained following completion of the cabinet replacement. Prior to removing the existing fiber optic interconnect center, the Contractor shall identify and record the exact splicing of the interconnect center (i.e. Cable 1/Blue-Blue splice to Cable 3/Blue-Blue) and the exact communications topology (i.e. Cable 2/Blue-Blue terminate and jumper to Transceiver Transmit 1 Port).

After installing the new fiber optic interconnect center, the Contractor shall perform all splicing and terminating as recorded for the existing interconnect center. Jumper the terminations to the new field Ethernet switch in the signal cabinet to maintain the existing communications topology (i.e. Cable 2/Blue-Blue terminate and jumper to Switch Transmit 1 Port). At locations of existing and new CCTV camera installations, some existing interconnect centers may call for a modification of the existing splicing architecture. For these locations, a splice detail showing the final configuration is included in the Plans.

Install interconnect centers with connector panels, splice trays, storage for slack cable or fibers, mounting and strain relief hardware and all necessary hardware.

Terminate and splice all fibers including unused fibers.

Label all fiber-optic connectors, whether on jumpers, connector panels or other equipment, to prevent improper connection. Obtain approval of fiber-optic connector labeling method.

For all fibers designated for termination to connector panel within interconnect center, fusion splice fibers to pigtails.

For all cut fibers designated to pass through interconnect center, fusion splice fibers.

For all buffer tubes designated to pass through interconnect center, neatly coil excess tubing inside interconnect center.

D. Termination and Splicing within Splice Enclosure

Install splice enclosures with splice trays, basket containment assemblies, racking for slack cable or fibers, mounting and strain relief hardware, and all other necessary hardware.

Fusion splice all fibers including fibers designated to be coupled with fibers from a drop cable assembly and cut fibers designated to pass through splice enclosure.

For all buffer tubes designated to pass through splice enclosure, neatly coil excess tubing inside basket provided with enclosure.

Label all fiber-optic splices. Obtain approval of fiber-optic connector labeling method.

Install heat shrink cable shields using methods recommended by the manufacturer of the enclosure. Perform a pressurization flash test on enclosure in accordance with manufacturer's recommended procedures at the conclusion of splicing procedure and before final placement of enclosure.

For aerial installations, secure enclosures to messenger cable using manufacturer supplied hardware. Secure SMFO cable and drop cable assemblies to snowshoes.

Install enclosures with enough slack cable to allow enclosure to be lowered to ground level and extended into a splicing vehicle.

For underground, manhole, and junction box facility installations, place the enclosure along with required spare cables in the facility in a neat and workmanship like manner.

E. Modify Interconnect Center and Splice Enclosure

Modify existing fiber optic interconnect centers and/or splice enclosures as shown in the plans. Install additional patch panels, splice trays and pigtails where necessary and fusion splice fiber connections and perform OTDR testing as required by the plans. Install new fiber optic jumpers and make connections to equipment and/or patch panels as necessary.

F. Testing

Provide written notification a minimum of 10 days before beginning OTDR tests.

After splicing is completed, perform bi-directional OTDR tests on each fiber, including unused fibers. Install a 1,000-ft pre-tested launch cable between the OTDR and fiber optic cable to be tested and a 1,000-ft pre-tested destination cable on the end of the fiber optic cable to be tested. Ensure each launch cable has been tested and is compatible with the fiber being installed. Provide Engineer with test results of the launch cable before use. Re-test or replace launch cable at Engineer's request.

Ensure fusion splice losses do not exceed 0.05 dB and connectors have a loss of 0.5 dB or less. If any fiber exceeds maximum allowable attenuation or if fiber properties of the cable have been impaired, take appropriate actions up to and including replacement of the fiber cable.

Clearly label each OTDR trace identifying a starting and ending point for all fibers being tested. Record the attenuation level of each fiber and clearly indicate OTDR trace results in report format. Furnish 2 hard copies of each of the OTDR trace results and electronic copies of all trace results along with digital photographs showing workmanship for each splice on a compact disk. Furnish the manufacturer's make, model number and software version of the OTDR used for testing.

Furnish to the Engineer 2 copies of the software needed to view the OTDR traces electronically.

14.4. MEASUREMENT AND PAYMENT

Interconnect Center (___) will be measured and paid as the actual number of fiber-optic interconnect centers of each type furnished, installed and accepted.

Splice Enclosure will be measured and paid as the actual number of fiber-optic splice enclosures furnished, installed and accepted. No measurement will be made between aerial, underground, manhole or junction box installation of the fiber-optic splice enclosure.

Modifying Existing Splice Enclosure or Interconnect Center will be measured and paid as the actual number of fiber-optic splice enclosures modified and accepted. No measurement will be made between aerial, underground, manhole or junction box installation of the fiber-optic splice enclosure.

No measurement will be made of splice trays, pigtails, jumpers, connector panels, testing and any corrective actions, repairs and replacements needed for exceeding maximum allowable

attenuation or other defects, as these will be incidental to furnishing and installing fiber-optic interconnect centers and splice enclosures and modifying splice enclosures.

Payment will be made under:

Interconnect Center (Standard) ..... Each

Interconnect Center (Oversized) ..... Each

Splice Enclosure ..... Each

Modifying Existing Splice Enclosure or Interconnect Center ..... Each

15. DELINEATOR MARKERS

15.1. DESCRIPTION

Furnish and install delineator markers with all necessary hardware.

15.2. MATERIAL

A. General

Furnish material, equipment and hardware under this section that is pre-approved on the ITS and Signals QPL.

B. Delineator Markers

Furnish tubular delineator markers, approximately 6 ft long, and constructed of Type III HDPE material. Provide delineator assemblies that are ultraviolet stabilized to help prevent components from color fading, warping, absorbing water, and deterioration with prolonged exposure to the elements. Provide delineators designed to self-erect after being knocked down or pushed over. Provide orange delineator posts.

Provide text, including contact number, hot stamped in black on a yellow reflective background material that will not fade or deteriorate over time. Provide delineator markers with nominal message height of 15" that contain the text in in the figure below visible from all directions approaching the assembly.

WARNING	FIBER	OPTIC	CABLES
BEFORE EXCAVATING OR IN AN EMERGENCY CALL (704) 638-5269			
CITY OF SALISBURY TRAFFIC OPERATIONS			

15.3. CONSTRUCTION METHODS

Submit sample of proposed delineator markers for approval before installation.

Install delineator markers using a method that firmly and securely anchors delineator marker in the ground to prohibit twisting and easy removal.

15.4. MEASUREMENT AND PAYMENT

Delineator Marker will be measured and paid as the actual number delineator markers furnished, installed and accepted.

Payment will be made under:

Delineator Marker .....Each

16. LOCAL AREA NETWORK

16.1. DESCRIPTION

Furnish, install, configure, and test a 10/100/1000 Fast Ethernet local area network (LAN). Furnish LAN that interconnects field devices including signal controllers and CCTV cameras with central hardware including computer workstations, server computers, and CCTV central equipment. Furnish LAN connections as shown on the block diagram.

Integrate the LAN with a City-provided static IP internet connection at the Customer Service Center to allow remote access to the signal system for authorized users from outside the LAN. Furnish, install, and integrate a virtual private network (VPN) firewall between the core Ethernet switch and the Internet connection.

16.2. MATERIAL

A. General

Furnish equipment for the LAN that complies with IEEE standard 802. Furnish Ethernet Switches of all types that are fully compatible and interoperable with the network monitoring software and network hardware operating system software.

Furnish Ethernet Switches of all types that comply with the following electrical safety requirements: UL60950 or CSA C22.2 No. 60950 (safety requirements for IT equipment) and FCC Part15 Class A for EMI emissions.

For installations routing cables inside buildings, utilize existing cable raceways, electrical boxes, and metallic conduit where feasible. Where called for in the Plans, install new thin-walled EMT conduit that complies with the NEC and EIA/TIA Standard 569 and commercial building standards for telecommunications pathways.

B. Network Performance Management Software

Furnish network performance management and remote monitoring (RMON) software. Furnish the license(s) and additional copies of the software to allow it to be installed on all workstations (up to 10) designated by the Engineer.

Furnish software capable of monitoring all nodes and utilized ports on the enterprise. Furnish software capable of 50% expansion in the number of nodes and ports managed over the number of nodes and ports present and utilized at the final acceptance of the project as documented in the RDD.

The software shall use a GUI to configure, manage, and monitor the local network. At a minimum, the software shall provide the following functions and features:

- SNMP based
- Full management of network firewall
- Support SSH
- Utilize a GUI Web/browser style interface

- Provide a schematic display of the entire network enterprise that may be drilled down to the port level or panned out to the System level
- Provide Inventory tracking
- Provide bandwidth monitoring
- Provide SMTP support
- Provide auto alerting
- Monitor QOS
- Support management VOIP
- Support NETFLOW
- Support Wireless network management
- Receive SYSlog messages
- Generate usage/error reports
- Be capable of "pushing" upgrades to network gear via TFTP
- Detect switch failures
- Detect router failures
- Detect cable failures
- Provide network performance information
- Support the monitoring of cabinet and equipment temperature alarms via use of SNMP traps.
- Provide switch configuration backup capabilities via TFTP
- Provide configuration change tracking capabilities

C. Field Ethernet Switch

Furnish Field Ethernet switches fabricated for use in field equipment cabinets that are ruggedized to meet or exceed NEMA TS-2 requirements for temperature, shock, humidity, and vibration.

Furnish Field Ethernet Switches that are DIN rail mounted and come equipped with hardware to permit mounting in an EIA 19" equipment rack.

Furnish Field Ethernet Switches that weigh no more than 15 lbs. and are no more than 250 cubic inches in volume.

Furnish Field Ethernet Switches with the following minimum characteristics and features:

- Minimum of six (6) 10BASE-T/100BASE-TX ports:

- Minimum of two (2) 1000 BaseX Optical uplink ports that utilize small form-factor pluggable (SFP) connectors.
- Furnish SFP modules rated to service the Field Ethernet to Field Ethernet optical uplinks and Field Ethernet to Core Ethernet rated for optical attenuation required to service the link. Use SFP modules that are LX and are matched and compatible with the SFP module it is mated with. Furnish attenuators if required to service link without saturation receiving optics.
- Furnish SFP modules rated for use with the existing optical cable integrated under this project.
- Furnish SFP modules with LC connectors.
- SFP modules shall be considered incidental to the field Ethernet switch.
- Management console port

Furnish Field Ethernet switches with the following features:

- 10/100BaseTX ports:
  - RJ45 connectors
  - Cable type: Category 5e, unshielded twisted pair
  - Segment Length: 100m
  - Auto-negotiation support (10/100Mbps)
  - Auto MDIX crossover capability
  - Full Duplex operation (IEEE 802.3x)
  - TVS (transient voltage suppression) between Line +/-, Line +/ground, and Line - ground to protect the circuitry

Furnish Field Ethernet switches with the following networking requirements:

- The switch shall support automatic address learning of up to 8192 MAC addresses.
- The switch shall support the following advanced layer 2 functions:
  - IEEE 802.1Q VLAN, with support for up to 4096 VLANs
  - IEEE 802.1p priority queuing
  - IEEE 802.1w rapid spanning tree
  - IEEE 802.1s multiple spanning tree
  - IEEE802.1AD link aggregation
  - IEEE 802.3x flow control

- IGMPv2 with 256 IGMP groups
- Port Rate Limiting
- Configuration via test file which can be modified through standard text editor
- Forwarding/filtering rate shall be 14,880 packets per second (PPS) for 10Mps,148,800 for 100Mps, 1,488,000 for 1000Mps
- DHCP Option 82

Furnish Field Ethernet switches with the following network management functionality requirements:

- SNMPv2, SNMPv3
- RMON
- GVRP
- Port Mirroring
- 802.1x port security
- Radius Server
- TACACS+ Server
- SSL – Secure Socket Layer
- SSH – Secure Shell
- TFTP
- Network Time Protocol (NTP)
- Simple Network Time Protocol (SNTP)
- Management via web or Telnet

D. Core Ethernet Switch

Furnish Core Ethernet Switch with the following minimum characteristics and features:

- L3 core modular, high-availability, switch equipped with redundant fans, power supplies, and support for redundant supervisor/route processor engines, or approved equivalent functionality.
- A minimum of four (4) slots for switch/routing processor modules, but at least one spare slot shall remain after configuring required ports/interfaces herein.
- The following minimum connectors:
  - Minimum of thirty six (36) 1000BASE-LX SFP-based ports: LC fiber connectors (single-mode) as needed to meet distance requirements at Core Switch and to be

compatible with matched Field Switches to support the distances shown in the Plans for switches connected to the Core switches. Attenuators will be furnished if required to service link without saturating receiving optics.

  - Fiber jumper cables with appropriate connectors to connect with switch and adjacent drop cable connectors and/or other switches.
  - Ethernet management port: RJ-45 connectors
  - Management console port: RJ-45-to-DB9 cable for PC connections
  - Minimum of sixteen (16) 10/100/1000 Base-TX copper RJ-45 connectors

- Dynamic Host Configuration Protocol (DHCP)
- Automatic QoS (AutoQoS)
- Autonegotiation on all ports for auto selection of speed and duplexing modes.
- Link Aggregation Control Protocol (LACP)
- Automatic media-dependent interface crossover (MDIX)
- Switching Capacity per line card 300 Gbps
- 256 MB DRAM or greater
- 128 MB FLASH or greater
- 1000 VLANs
- 4000 VLAN IDs
- 1000 Switched Virtual Interfaces (SVIs)
- 9216 Byte Jumbo Frames or greater
- 100 Mpps Forwarding Rate or greater
- Support 1000 IGMP groups and multicast routes
- Support automatic address learning of up to 12,000 MAC addresses
- Security:
  - DHCP Snooping
  - Dynamic ARP Inspection (DAI)
  - Secure Shell (SSH) Protocol, EAP, and Simple Network Management Protocol Version 3 (SNMPv3), Network Time Protocol Version 3 (NTPv3)
  - Port Mirroring
  - TACACS+ and RADIUS authentication

- MAC Address Notification
- Port Security
- Bridge protocol data unit (BPDU) protection and filtering
- Root Guard
- IGMP snooping
- Dynamic VLAN assignment

- Standards: Supply a L3 Ethernet switch that meets or exceeds the following standards:
  - IEEE 802.1s Multiple Spanning Tree Protocol (64 regions)
  - IEEE 802.1w Rapid Reconfiguration Spanning Tree Protocol
  - IEEE 802.1x
  - IEEE 802.3ad
  - IEEE 802.3af
  - IEEE 802.3x full duplex on 10BASE-T, 100BASE-TX, and 1000BASE-T ports
  - IEEE 802.1D Spanning Tree Protocol
  - IEEE 802.1p CoS Prioritization
  - IEEE 802.1Q VLAN
  - IEEE 802.3 10BASE-T specification
  - IEEE 802.3u 100BASE-TX specification
  - IEEE 802.3ab 1000BASE-T specification
  - IEEE 802.3z 1000BASE-X specification
  - An IP gateway redundancy protocol such as virtual router redundancy protocol (VRRP – RFC 2338), hot-standby router protocol (HSRP - proprietary) or gateway load balancing protocol (GLBP - proprietary), or an approved equal will be used to provide a redundant IP gateway in the event of a primary gateway failure.
  - OSPFv2 and v3: RFC 2328 for IPv4 and RFC 5340 for IPv6

- The following Indications:
  - Per-port status LEDs: link integrity, disabled, activity, speed, and full-duplex indications
  - System-status LEDs: system, power supplies, fans, and bandwidth utilization indications

- Environmental Requirements:
  - Operating temperature: 0°C to 40°C minimum range
  - Relative humidity operating: 5 to 90% (non-condensing)
- Mean Time Between Failures of greater than 80,000 hours
- Power Supply
  - Rated to handle input power of 115 VAC/60Hz (± 10%), unless otherwise approved by the Engineer
  - Hot-swappable redundant modules
- Physical Requirements
  - EIA standard rack mounting in an IT equipment cabinet
  - No larger than 10 RU
- Safety Requirements
  - FCC Part 15 Class A for EMI emissions

E. Network Ethernet Switch

Furnish Network Ethernet Switch that is identical to the Field Ethernet Switches provided under this project and meets all of the requirements, features, and configurations for Field Ethernet Switches as detailed in these Project Special Provisions.

F. VPN Firewall

Furnish network firewall and virtual private network (VPN) server integrated in a single unit. Unit shall be in a rack mountable chassis with a maximum height of 1 RU. Furnish unit with the following minimum features:

- Integrated bandwidth management functionality
- Integrated intrusion detection functionality
- Four (4) Fast Ethernet (10/100 Mbps) ports
- One (1) serial com port
- Up to 60 Mbps of firewall throughput
- 3 Mbps of Triple Data Encryption Standard (3DES) VPN throughput
- 4.5 Mbps of Advanced Encryption Standard-128 (AES) VPN throughput
- Diagnostic LEDs on front of unit showing states for power, status, and LAN at a minimum

Provide user license to allow at least 12 concurrent remote users to access the signal system LAN.

G. Cable

Furnish coaxial, Category 6 network cable, RS-232, monitor cabling, and all other cabling in the lengths required to interconnect devices as called for in the plans, specifications, and manufacturers requirements. Furnish quality and grade of cable capable of being operable at up to twice the distance installed on this project. Furnish cabling meeting all manufacturers' requirements and all applicable standards for performance and safety.

16.3. CONSTRUCTION METHODS

A. General

Contact Engineer prior to entering any building. Coordinate and obtain approval from Engineer regarding allowable working time in buildings.

Whenever possible, use existing cable raceways, ducts, raised floors, and drop ceilings to route cables.

Label all fiber-optic connectors, whether on jumpers, connector panels, or other equipment, to prevent improper connection. Obtain approval of the fiber-optic connector labeling method.

B. Requirements Definition Document

Prior to commencing work, the Contractor shall develop a Requirements Definition Document (RDD) that will form the basis for the overall network architecture and design.

- Complete description of the proposed implementation of the access, distribution and core layers for the network as described in the Plans and these Project Special Provisions
- Development of an IP Design Scheme with ranges assigned to each node to be integrated by the Contractor (address ranges, geographic distribution, standards for addresses within each cabinet)
- Proposed IP subnet definition and addressing including any and all masks
- Proposed IP multicast configuration including multicast routing (i.e., PIM sparse or dense) and Rendezvous Point (RP) designation as necessary
- Proposed recommendations for failover and redundancy including network device power, supervisor cards, and network ports
- Proposed configuration and guidelines for L3 routing (OSPF, VRRP, EIGRP, RIP, etc.);
- Proposed configuration and guidelines for Virtual LAN assignments including management VLANs, device VLANs and routing VLANs; and
- Proposed configuration and guidelines for L2 broadcast storm prevention, loop prevention and fault tolerance mechanisms. (Spanning Tree diagram with designated, blocking and forwarding ports indicated. Root bridge and backup root bridge must also be specified.) Incorporation of Multiple Spanning Tree Protocol.

- Proposed configuration and guidelines to mitigate common security threats such as denial of service, man in the middle, MAC/IP spoofing and brute force dictionary attacks.
- Proposed configuration and guidelines for 802.1p Class of Service (COS) queue assignments
- Proposed configuration and guidelines for specific port assignments on each of the L2 and L3 devices

The RDD shall be prepared and signed by a qualified networking professional (minimum CCNA or a manufacturer-approved equivalent based on the approved hardware vendor) and will be approved by the Engineer. The Qualified network professional will be present during the installation and testing of the local area network as well as during system testing.

C. LAN Integration

Fully integrate field, core, and network switches to form a complete local area network for communications between the TOC, fiber termination point, and each field device.

Fully integrate switches and firewall with computer and central system hardware to form a complete local area network that allows users from the TOC as shown on the block diagram in the Plans to access applications on application servers. Fully integrate network to allow the notebook computer users to be able to connect to the network via the LAN port on the notebook computer using a network cable.

Fully integrate LAN equipment to provide virus protection, user authentication, and security functions to prevent unauthorized users and data from entering the signal system LAN.

All cables for each piece of hardware installed shall be clearly labeled, using a label convention approved by the Engineer. All cabling shall be manufacturer assembled and without any adapters, unless otherwise approved by the Engineer.

D. Field Ethernet Switches

Prior to installation of any field Ethernet switches, the Engineer shall approve the Contractor's desired mounting method and mounting location of the switch in the signal cabinet or CCTV cabinet. Should the Contractor need to modify the approved mounting method and location at a cabinet, notify the Engineer prior to installation for approval of the alternate mounting method or location.

Install and integrate all field Ethernet switches at field locations as depicted in the diagrams and tables and called for in these Project Special Provisions. Integrate with signal controller and CCTV camera hardware and existing fiber optic communications.

Furnish SMFO jumpers that are a minimum of 3 feet in length with the appropriate type of factory assembled connectors on each end. Ensure that SMFO jumpers meet the operating characteristics of the SMFO cable with which it is to be coupled.

Provide inline surge protection for all Ethernet connections in field cabinets.

E. Core Ethernet Switch

Install a core Ethernet switch in the Customer Service Center. Integrate the core Ethernet switch with the existing fiber optic cable terminations, using new jumper cables to maintain the existing communications architecture and topology. Route cables in existing overhead raceways.

Fully integrate with network Ethernet switch at the TOC using existing fiber optic communications as directed by the Engineer. Fully configure switch with performance monitoring software and operating system software/firmware.

Configure and test all Ethernet equipment prior to installation.

F. Network Ethernet Switch

Install the network Ethernet switch in the TOC and integrate with all application servers and the core Ethernet switch. Fully configure switch with performance monitoring software and operating system software/firmware. Wall-mount the network Ethernet switch near the existing fiber optic patch panel according to manufacturer's recommendation. Furnish SMFO jumpers with the appropriate type of factory assembled connectors on each end. Ensure that SMFO jumpers meet the operating characteristics of the SMFO cable with which it is to be coupled.

Configure and test all Ethernet equipment prior to installation.

G. VPN Firewall

Install one (1) VPN firewall switch at the Customer Service Center. Integrate with the core Ethernet switch to allow only authorized remote users to access the signal system LAN. Install VPN software as required on all notebook computers provided under this project.

Integrate the City of Salisbury provided static-IP Internet connection at the Customer Service Center to serve as the gateway from the Internet for remote users that is physically separate from the gateway to the Internet for the City-maintained wide area network.

16.4. MEASUREMENT AND PAYMENT

(____) Ethernet Switch will be measured and paid as the actual number furnished, installed, integrated, and accepted. All SFP modules, optics, cabling, attenuators, configuration, and testing or other labor or materials required to install and integrate the Ethernet Switch will be considered incidental and not be paid for separately.

VPN Firewall will be measured and paid as the actual number furnished, installed, integrated, and accepted.

LAN Integration will be measured and paid as a lump sum. LAN integration includes configuration and integration of all LAN hardware, firmware, software, and VPN firewall to complete the LAN architecture, and submittal of the RDD. All cabling, hardware, patch panels, accessories, labor, and materials required to make the unit function as part of this project shall be considered incidental and not paid for separately. Furnishing, installing, and configuring the LAN Network Performance Management and Remote Monitoring Software shall be included as part of the LAN integration and not paid for separately. Partial payments for this item will be made on the following schedule: 20% upon completion and acceptance of the RDD; 20% upon installation, integration and acceptance of LAN equipment, 20% upon installation, integration and acceptance of LAN equipment at Routing Switch locations, 20% upon deployment and acceptance of the Network

Performance Management and Monitoring Software, and 20% upon installation, integration and acceptance of the entire project furnishing of and acceptance of network as-built documentation.

No separate payment will be made for cable routing within building as this will be considered incidental to equipment installation and integration.

Payment will be made under:

Field Ethernet Switch.....Each
Core Ethernet Switch.....Each
Network Ethernet Switch.....Each
VPN Firewall.....Each
LAN Integration.....Lump Sum

17. S PREAD SPECTRUM WIRELESS ETHERNET RADIO

17.1. DESCRIPTION

Furnish and install a spread spectrum wireless Ethernet radio system with all necessary hardware and signage in accordance with the plans and specifications to provide a data link between field devices (i.e. traffic signal controllers, dynamic message signs, etc.).

17.2. MATERIAL

A. General

Furnish a spread spectrum wireless Ethernet radio system with all necessary hardware and signage in accordance with the plans and specifications to provide a data link between field devices (i.e. Traffic Signal Controllers, Dynamic Message Signs, etc.). Provide a radio system with a bi-directional, full duplex communications channel between 2 "line-of sight" antennas using license free, spread spectrum technology operating in the 902 - 928 MHz frequency band.

Furnish material conforming to the National Electrical Code (NEC), the National Electrical Safety Code (NESC), Underwriter's Laboratories (UL) or a third-party listing agency accredited by the North Carolina Department of Insurance, and all local safety codes in effect on the date of advertisement. Comply with all regulations and codes imposed by the owner of affected utility poles.

B. 900 MHz Wireless Radio

Furnish license free 902 - 928 MHz Ethernet radio modem with antennas, coaxial cable and mounting hardware, and configuration software. Design Ethernet radio modem to work in "point-to-point", "point-to-multipoint", "multipoint-to-point" and "multipoint-to-multipoint" configurations. Ensure the spread spectrum wireless Ethernet radio meets the following minimum requirements:

1) License free (ISM) Spread Spectrum radio band (902 - 928 MHz)
2) Frequency Hopping Technology (Direct Sequence Spread Spectrum Technology is not acceptable)
3) Bi-Directional, Full Duplex
4) Provide at least 3 Programmable Radio Frequency (RF) output levels ranging from 1mW up to 1 Watt.
5) Provide user-selectable radio frequency channels (Min. 50) and hopping patterns (Min. 50) that will allow the user to adjust operating characteristics to avoid interference within the intended 902 - 928 MHz frequency range.
6) RS-232 interface capable of operating from 1200 bps to 115.2 Kbps, with 8 or 9 bit
7) DB9-F connector for RS-232 port
8) 10/100BaseTX Ethernet interface
9) RJ45 connector for Ethernet port
10) Maximum of 8 mSec. end-to-end latency

11) 16 bit Cyclic Redundancy Check (CRC) error checking with auto re-transmit

12) Built-in store-and-forward (single radio repeater, back-to-back radio set-ups are not allowed to accomplish this function)

13) 32 Bit encryption

14) Receiver Sensitivity of -108dBm @ 10-6 BER

15) Antenna port: Threaded Connector (Nickel and/or Silver Plated Brass)

16) Front panel LED indicators (at a minimum):

    a. Power

    b. Transmit Data

    c. Receive Data

    d. LAN connectivity and activity

    e. Data Port Indicators consisting of at least 3 LED's grouped together representing a Low, Medium or High Signal Strength with regards to the communications link with another targeted radio. Software running on a laptop is not acceptable in meeting this requirement for front panel LED Data Port Indicators.

17) Operating temperature of -40 to +165°F at 0 to 95% Humidity

18) Power supply requirements:

    a. Wall Adapter:

        i. Input Voltage (120 VAC UL/CSA) wall cube plug-in module

        ii. Output Voltage (6VDC to 24VDC)

    b. Typical current draw of no greater than 400 mA when powered with 12 VDC input and transmitting one watt of RF output power

    c. Radio Sleep mode with a maximum current draw of □1□A

19) Shelf mounted design

Furnish a Radio Frequency Signal Jumper constructed of an RG-58 Coaxial Cable. On one end of the cable supply a RF Threaded Connector that is compatible with the radio supplied and on the other end supply a Standard N-Type Male Connector to mate with the lightning arrestor. Provide the jumper in 6 ft lengths. Ensure that the cable is assembled by a manufacturing facility. Contractor and/or Vendor assembled cables are not acceptable.

At remote locations (i.e. not on the fiber optic network), furnish a coaxial Category 5e network cable to be installed between the radio modem and the traffic signal controller Ethernet interface. Ensure cable is at least 6 ft long. Ensure that the cable is assembled by a manufacturing facility. Contractor and/or Vendor assembled cables are not acceptable.

At receiving locations (i.e. on the fiber optic network), furnish a coaxial Category 5e network cable to be installed between the radio modem and the field Ethernet switch. Ensure cable is at least 6 ft long. Ensure that the cable is assembled by a manufacturing facility. Contractor and/or Vendor assembled cables are not acceptable.

Ensure that installing the wireless radio system with a fully functional field device (i.e. controller) does not require any field device modifications with regards to hardware or software.

C. Software

Furnish units with a Windows-based software program that uses a GUI (Graphical User Interface) to provide "remote programming, radio configuration, remote maintenance, diagnostics and spectrum analyzer" features. Ensure the software will operate on all past and current Microsoft® Windows operating platforms: Windows 98®, Windows 2000®, Windows NT®, Windows XP®, Windows Vista® or Windows® 7. Provide configuration software that can be upgraded in the future at no additional charge.

Ensure the radio modem is configurable from a single location (i.e. master radio location) via supplied software (no extra cost). Furnish software supplied with drivers to allow easy set-up with all industry standard traffic signal controllers, including 2070 controllers containing custom software written specifically for the North Carolina Department of Transportation. Ensure the supplied software contains pre-written drivers for industry standard radar packages and Dynamic Message Sign controllers.

D. Directional Antenna (Yagi)

Furnish a directional antenna of welded construction that allows for vertical and horizontal polarization. Furnish an 8.5 dBd Gain or 13 dBd Gain antenna that comply with the table below.

Property	Requirement
Frequency Range	896 - 940 MHz
Nominal Gain	8.5 dBd
Front to Back Ratio	18 dB
Horizontal Beamwidth (at half power points)	65 degree
Vertical Beamwidth (at half power points)	55 degree
Power Rating, UHF Frequency	200 Watts
Lightning Protection	DC Ground
Termination	Coaxial pigtail with a Standard N-Type Female Connector
Impedance	50 ohms

Property	Requirement
Length	24"
Rated Wind Velocity	125 mph
Rated Wind Velocity (with 0.5" radial ice)	100 mph
Projected Wind Surface Area (flat plane equivalent)	0.26 sf
Number of Elements	6

Property	Requirement
Frequency Range	902 - 928 MHz
Nominal Gain	13 dBd
Front to Back Ratio	20 dB
Horizontal Beamwidth (at half power points)	40 degree
Vertical Beamwidth (at half power points)	35 degree
Power Rating, UHF Frequency	200 Watts
Lightning Protection	DC Ground
Termination	Coaxial pigtail with a Standard N-Type Female Connector
Impedance	50 ohms
Length	53"
Rated Wind Velocity	125 mph
Rated Wind Velocity (with 0.5" radial ice)	100 mph
Projected Wind Surface Area (flat plane equivalent)	0.46 sf
Number of Elements	13

Furnish mounting hardware with the antenna that will secure the antenna to a mounting pipe that has a 1.1/2" Nominal Pipe Size (approximately 2" OD pipe diameter), as recommended by the manufacturer of the antenna and as approved by the Engineer.

E. Omnidirectional Antenna

Furnish an omnidirectional antenna of a solid, single piece construction in accordance with the table below.

Property	Requirement
Frequency Range	902 - 928 MHz
Nominal Gain	Typical gains of 3 or 6 dBd (dependent upon gain needed for application)
Termination	Standard N-Type Female Connector
Impedance	50 ohms
VSWR	1.5:1
Vertical Beam Width	33 degrees (3dBd Gain), 17 degrees (6dBd Gain)
Lightning Protection	DC Ground
Power Rating, UHF Frequency	100 Watts
Length	25" (3dBd Gain), 65" (6dBd Gain)
Rated Wind Velocity	125 mph

Furnish mounting hardware with the antenna that will secure the antenna to a mounting pipe that has a 1.5" Nominal Pipe Size (approximately 2" OD pipe diameter), as recommended by the manufacturer of the antenna and as approved by the Engineer.

F. Antenna Mounting Hardware Kit

Furnish an antenna mounting kit to support the antenna when attached to a metal pole, mast arm or wood pole.

Ensure the Antenna Mounting Hardware Kit includes at least one 96" galvanized steel cable with a stainless steel bolt, nut and lock washer assembly on each end. Ensure the pole base plate accepts a 1 1/2" NPT aluminum pipe, and provides a surface that is at least 6 3/4" long x 4 1/4" to provide contact with the pole. Ensure the pole base plate is designed to allow both ends of the 96" galvanized cables to be secured and tightened to the base plate. Provide a 90 degree elbow with internal threads on both ends to accommodate 1 1/2" NPT aluminum pipes. Provide a 1 1/2" x 18" long aluminum pipe threaded on both ends and a 1 1/2" x 24" aluminum pipe threaded on one end with an end cap.

G. Coaxial Cable

Furnish 400 Series coaxial cable to provide a link between the antenna and the lightning arrestor that meets the following minimum specifications:

Property	Requirement
Attenuation (dB/100 ft) @ 900 MHz	3.9 dB
Power Rating @ 900 Mhz	0.58 kW
Center Conductor	0.108" diameter Copper Clad Aluminum
Dielectric: Cellular PE	0.285" diameter
Shield	Aluminum Tape - 0.291" diameter Tinned Copper Braid - 0.320" diameter
Jacket	Black UV protected polyethylene
Bend Radius	1" with less than 1 ohm impedance change at bend
Impedance	50 ohms
Capacitance	23.9 pF/ft

H. Standard N-Type Male Connector

Furnish Standard N-Type Male Connector(s) of proper sizing to mate with the 400 series coaxial cable and use a crimping method to secure the connector to the coaxial cable. Furnish a connector that meets the following minimum specifications:

1) Center Contact: Gold Plated Beryllium Copper (spring loaded, non-solder)
2) Outer Contact: Silver Plated Brass
3) Body: Silver Plated Brass
4) Crimp Sleeve: Silver Plated Copper
5) Dielectric: Teflon PTFE
6) Water Proofing Sleeve: Adhesive Lined Polyolefin – Heat Shrink
7) Attachment Size: Crimp Size 0.429" (minimum) hex
8) Electrical Properties:
    a. Impedance: 50 ohms

b. Working Voltage: 1000 Vrms (max)

c. Insertion loss: 0.1 x GHz 15 F

d. VSWR: 1.25:1 (max) up to 3GHz

I. Coaxial Cable Shield Grounding and Weatherproofing Kits

1) Furnish a Coaxial Cable Shield Grounding Kit containing components that will adequately bond and ground the cable shield to the pole ground. Ensure the grounding kit complies with MIL-STD-188-124A for coaxial cable and protects the cable from lightning currents of at least 200kA. Ensure each kit is supplied, as a minimum, with the following:

   a. Preformed Strap: 24 Gauge copper strap that is at least 1 5/8" long and is sized to mate with the 400 series coaxial cable

   b. Tensioning Hardware: Copper nuts and lock washers

   c. Grounding Lead Cable: #6 AWG, stranded, insulated copper wire

2) Furnish a Weatherproofing Kit containing components that will protect the coaxial cable shield grounding system against the ingress of moisture and prevent vibrations from loosening the connections. Ensure the weatherproofing kit is supplied, as a minimum, with the following:

   a. Butyl Mastic Tape: 3 3/4" wide by 24" long (approximately)

   b. Electrical Tape: 2" wide by 20" long (approximately)

J. Lightning Arrestor

Furnish a lightning arrestor installed in line between each antenna and its designated radio modem inside the equipment cabinet in accordance with the table below. Furnish lightning arrestor with multistrike capability, low strike throughput energy, flange mount and bulkhead mount options and a standard N-Type female connector on both the surge-side and protected-side connectors.

Property	Requirement
Filter Type	DC Block (non gas tube design)
Surge	20kA, 800MHz to 2.0GHz ≤ 1.1 : 1 VSWR 18kA, 800MHz to 2.3GHz ≤ 1.1 : 1 VSWR 18 kA, 700MHz to 2.7GHz ≤ 1.2 : 1 VSWR
Insertion Loss	≤0.1 dB over frequency range
Max Power	500 W @ 920MHz (750 W at 122° F)
RF Power	300 Watts
Let Through Voltage	≤± 3 Volts for 3kA @ 8/20 μs Waveform

Property	Requirement
Throughput Energy	≤0.5 μJ for 3kA @ 8/20 μs Waveform
Temperature	-40 to 185° F Storage/Operating
Vibration	1G at 5 Hz up to 100Hz
Unit Impedance	50 Ohm
VSWR	1.1:1
Frequency Range	800 MHz to 2200 MHz

K. Coaxial cable – Power Divider (Splitter)

Furnish a coaxial cable power divider for repeater radio sites in accordance with the table below. Ensure the power divider accommodates a single primary input RF source and divides/splits the signal (power) equally between 2 output ports.

Property	Requirement
Power Division	2 - Way
Frequency	900 - 1100 MHz
Insertion Loss	0.22 dB
Impedance	50 Ohm
VSWR ref. to 50 Ohm (max)	1.3:1
Max. Input Power	500 Watts
Connectors	Standard N-Type Female
Dimension	2.5"W x 5"L
Weight	1.5 lb (approximately)

L. Disconnect Switch

Furnish a double pole, single throw snap switch in a weatherproof outlet box with cover, suitable for use in wet locations. Ensure outlet box and cover supports a lockout tag device. Ensure outlet box includes one 1/2" diameter hole in back of box. Furnish mounting hardware, sealing gaskets and lockout tag.

M. Warning Signs and Decal

Furnish "RF Warning Sign" and "Decal" at locations called for in the plans. Furnish mounting hardware to secure the sign to either metal or wood poles.

17.3. CONSTRUCTION METHODS

A. General

Perform a radio path Site Survey test before installing any equipment. Ensure the test evaluates the signal strength (dBm), fade margin (dB), signal-to-noise ratio, data integrity (poll test) and a complete frequency spectrum scan. Ensure the radio path site survey test is performed using the supplied brand of radio equipment to be deployed. During the initial radio path signal strength test it may be determined that a repeater station may be necessary to complete the intended link. Provide the test results to the Engineer for review and approval. Submit copies of the test results and colored copies of the frequency spectrum scan along with an electronic copy of this information. The Engineer will approve final locations of antennas and any necessary repeater stations. Install a coaxial cable, power divider, antenna splitter cable and additional antenna at locations where it is determined that a dual antenna configuration is necessary to accommodate communications in multiple directions.

Install the antenna in such a manner that avoids conflicts with other utilities (separation distances in accordance with the guidelines of the NESC) and as specified in the antenna manufacturer's recommendations. Secure the antenna mounting hardware to the pole and route the coaxial cable such that no strain is placed on the N-Type male coaxial connectors. On wood pole installations, bond the antenna mounting hardware to the pole ground using #6 AWG bare copper wire using split bolt or compression type fitting.

Install the coaxial cable shield grounding system by carefully removing the outer jacket of the coaxial cable without damaging the cable shield. Install the shield grounding system following the cable manufacturer's recommendations. Install and weatherproof the connection using the appropriate weatherproofing materials and following the manufacturer's recommendations. On wood poles, secure the #6 AWG grounding lead cable to the pole ground using split bolt or compression type fitting or a method approved by the Engineer. On metal poles, secure the #6 AWG grounding lead cable to the pole using a method approved by the Engineer.

Do not exceed the one inch bend radius of the coaxial cable as it traverses from the cabinet to the antenna assembly. Connect the lightning arrestor to the coaxial cable in the equipment cabinet. Properly ground and secure the arrestor in the cabinet. Permanently label all cables entering the cabinet. Ensure the power supply for the radio system is not connected to the GFCI receptacle circuit located in the cabinet. Place a copy of all manufacturer equipment specifications and instruction and maintenance manuals in the equipment cabinet.

At remote locations (i.e. not on the fiber optic network), integrate the radio system with the traffic signal controller. At receiving locations (i.e. on the fiber optic network), integrate the radio system with the fiber-optic field Ethernet switch.

B. Disconnect Switch

At all locations, where the antenna is mounted on a joint use pole, install a double pole, snap switch to remove power from the spread spectrum radio system. Do not mount weatherproof box on the traffic signal cabinet door. Drill a hole in the side of the traffic signal cabinet. Mount the outlet

box over the hole using a half inch chase nipple and bushings. Ensure sealing gaskets are in place and no water can enter the cabinet. Securely mount the weatherproof outlet box with additional mounting screws. Bond the outlet box to the equipment ground bus. See plans for approximate mounting height. Run the power supply cord of the spread spectrum radio unit into the outlet box and connect to switch. Securely attach power supply cord to equipment rack. Install disconnect switch with lockout tag cover. If the antenna is mounted on a joint use pole, the "disconnect switch" is required.

Do not install power supply for the radio in a GFCI protected outlet.

C. Warning Signs and Decals

At all locations, where the antenna is mounted on a joint use pole, secure a warning sign to pole. Mount warning sign(s) at locations called for in the plans. Ensure there are no conflicts between the warning sign and surrounding utilities. Mount warning sign to be easily viewed. Do not mount warning sign under pole grounds or conduit. If the antenna is mounted on a joint use pole, the RF warning sign is required.

Clean and remove any dirt or oil on traffic cabinet before placing decal. Place decal adjacent to the disconnect switch located on the outside of traffic cabinet. If the antenna is mounted on a joint use pole, the decal is required.

17.4. MEASUREMENT AND PAYMENT

900MHz Ethernet Radio will be measured and paid as the actual number of 900 MHz Ethernet radios furnished, installed and accepted. This item includes the appropriate sized antenna(s), radio, power supplies, disconnect/snap switch, signs, decals, data interface cable/serial cable, coaxial cable, lightning arrestor, radio frequency signal jumper, coaxial cable power divider (splitter), coaxial cable connectors, coaxial cable shield grounding system with weatherproofing, labeling and any integration between the radio system and a fiber optic network if necessary, installation materials and configuration software necessary to complete this work, including the radio path Site Survey test and warranties.

Payment will be made under:

900 MHz Ethernet Radio .....Each

18. S IGNS INSTALLED FOR SIGNALS

18.1. DESCRIPTION

Furnish and install signs for signals with cable hangers, rigid sign mounting brackets, U-channel posts and all necessary hardware.

18.2. MATERIAL

A. General

Use Grade C retroreflective sheeting, except for black sheeting. Use non-reflective for black sheeting.

Conform to the message layout, size and color as required in the MUTCD.

For messenger cable mounting, furnish either messenger cable hangers with free-swinging, 360° adjustable sign brackets or 3-bolt clamps as directed. Furnish aluminum, galvanized steel or stainless steel sign supporting hardware.

For ground mounting, furnish steel, 3 lb, U-channel posts with hardware for ground mounting. Comply with Section 903 of the Standard Specifications.

For mast-arm mounting, furnish rigid aluminum, galvanized steel or stainless steel sign mounting brackets.

B. Signs and Hardware

Fabricate signs from aluminum alloy sheets. Use supporting frames and accessories made of aluminum. Use galvanized steel backing plates and mounting bolts. Use materials that conform to the tables below.

Filler metal shall conform to Section 10(3) of the *Standard Specifications for Structural Supports for Highway Signs, Luminaires and Traffic Signals*.

Aluminum sign studs, welded to the sign panels in accordance with Article 901-3 of the Standard Specifications, shall be capable of withstanding a direct pull-out load of 400 lb. Furnish a Type 3 material certification in accordance with Article 106-3 of the Standard Specifications demonstrating conformance to this requirement. The Materials and Tests Unit will take samples of the studs and make random field tests of the welded studs to verify the statement of certification. Failure of more than 10% of the studs tested on any one sign will be sufficient evidence for rejection of stud welding on the entire sign. When tested in tension, the studs shall not fail in the weld area, but fail in the threaded portion of the stud.

Drill bolt holes and slots to finished size or they may be punched to finished size, provided the diameter of the punched holes is at least twice the thickness of the metal being punched. Flame cutting of bolt holes and slots will not be permitted. No galvanizing of any steel part will be allowed until all welding, cutting, milling, punching, and drilling of the part has been completed.

ALUMINUM SIGN MATERIALS		
Aluminum Materials	**Alloy Specification**	**Test Method**
Extruded Bars	6061-T6	ASTM B221
Sheets and Plates	6061-T6,5052-H38 or 3004-H38	ASTM B209
Structural Shapes	6061-T6	ASTM B308
Standard Weight Pipe	6061-T6	ASTM B241
Castings	356-T7	ASTM B26
Bolts	6061-T6, 2024-T4*	ASTM B211
Nuts (1/4" Tap and under)	2024-T4*, 6061-T6 or 6262-T9	ASTM B211
Nuts (5/16" Tap and over)	2024-T4*, 6061-T6 or 6262-T9	ASTM B211
Nuts (3/8" Self-locking)	2017-T4, 6061-T6	ASTM B211
Washers (std. flat) Alclad	2024-T4* or 6061-T6	ASTM B209
Washers (std. lock)	7075-T6	ASTM B211
Welded Studs (1/4")	5356-H12 or 5356-H32	ASTM B211

*The alloy shall have anodic coating of 0.0002" minimum thickness with dichromate or boiling water seal

STEEL SIGN MATERIALS		
Galvanized Steel Materials	**Test Method for Base Metal**	**Test Method for Galvanizing**
Structural Shapes and Plates	ASTM A36	ASTM A123
Standard Weight Black Pipe	ASTM A53	ASTM A123
Bolts and Nuts	ASTM A307	ASTM F2329
Washers (std. flat and lock)	ASTM A307	ASTM F2329
High Strength Bolts, Nuts and Washers	ASTM A325	ASTM B695 Class 55

C. Retroreflective Sheeting

Reflectorize all signs. Use colors and sheeting grades of the sign backgrounds and messages as shown in the contract. After preparation of the sign panels, in accordance with Subarticle 901-3(D)

of the Standard Specifications, apply retroreflective sheeting as required herein. The retroreflective sheeting shall consist of white or colored sheeting having a smooth outer surface and the property of a retroreflector over its entire surface.

Retroreflective sheeting shall meet ASTM D4956 and are listed on the NCDOT Approved Products List.

The reflective material specified herein is intended for use on surfaces of various traffic control devices, including drums, barricades, traffic cones and highway signs, to assure their adequate visibility at all times upon exposure to a light source when totally dry or wet. Provide reflectorization that produces a wide-angle retroreflectivity, enhancing nighttime visibility. This retroreflective sheeting shall consist of encapsulated, enclosed lens or prismatic with a transparent plastic having a smooth, flat outer surface. Provide material that is flexible, of good appearance, free from ragged edges, cracks and extraneous materials, and exhibits good quality workmanship.

1. Performance and Test Requirements

MINIMUM COEFFICIENT OF RETROREFLECTION FOR NC GRADE A (Candelas Per Lux Per Square Meter)								
Observation Angle, degrees	**Entrance Angle, degrees**	**White**	**Yellow**	**Green**	**Red**	**Blue**	**Fluorescent Yellow Green**	**Fluorescent Yellow**
0.2	-4.0	525	395	52	95	30	420	315
0.2	30.0	215	162	22	43	10	170	130
0.5	-4.0	310	230	31	56	18	245	185
0.5	30.0	135	100	14	27	6	110	81
1.0	-4.0	80	60	8	16	3.6	64	48
1.0	30.0	45	34	4.5	9	2	36	27

MINIMUM COEFFICIENT OF RETROREFLECTION FOR NC GRADE B (Candelas Per Lux Per Square Meter)									
Observation Angle, degrees	**Entrance Angle, degrees**	**White**	**Yellow**	**Green**	**Red**	**Blue**	**Fluorescent Yellow Green**	**Fluorescent Yellow**	**Fluorescent Orange**
0.2	-4.0	380	285	38	76	17	300	230	115
0.2	30.0	215	162	22	43	10	170	130	65
0.5	-4.0	240	180	24	48	11	190	145	60
0.5	30.0	135	100	14	27	6	110	81	30
1.0	-4.0	80	60	8	16	3.6	64	48	7.5
1.0	30.0	45	34	4.5	9	2	36	27	5.6

MINIMUM COEFFICIENT OF RETROREFLECTION FOR NC GRADE C (Candelas Per Lux Per Square Meter)							
Observation Angle, degrees	**Entrance Angle, degrees**	**White**	**Yellow**	**Green**	**Red**	**Blue**	**Brown**
0.2	-4.0	250	170	45	45	20	12
0.2	30.0	150	100	25	25	11	8.5
0.5	-4.0	95	62	15	15	7.5	5
0.5	30.0	65	45	10	10	5	3.5

For areas printed with transparent colors, the coefficient of retroreflection shall not be less than 70% of the values for the corresponding color.

(1) Adhesive

Meet ASTM D4956.

(2) Field Performance

The fabricating agency will date all signs (month, year) at the completion of fabrication. That date constitutes the start of the field performance obligation period.

2. Manufacturer's Warranty and Obligations

(1) Warranty

The sheeting manufacturer warrants to the Department that all materials furnished under this Specification will be new, of good components and workmanship and agrees to the following conditions.

Retroreflective sheeting processed and applied to sign blank materials in accordance with the manufacturer's manuals shall be warranted by the manufacturer to perform effectively as stated in this section. The manufacturer's manuals shall contain a complete descriptive explanation of all the requirements necessary of the sign fabricator.

(2) Obligation Grades A, B and C

(a) Years 1 through 7 (Years 1 Through 2 for Fluorescent Orange)

Cover the cost of restoring the sign face in its field location to its original effectiveness at no cost to the Department for materials, labor and equipment. In addition to the reflective requirements for Grade B fluorescent orange, the sheeting shall at least maintain a total Luminance Factor (Y) of 25 (ASTM D4956) and a Fluorescence Luminance Factor (YF) of 13% (ASTM E2301) for 3 years. Maintain at least 80% of fluorescent orange sheeting reflectivity for years 1 and 2.

(b) Years 8 through 10 (Year 3 for Fluorescent Orange)

Replace the sheeting required to restore the sign face to its original effectiveness. Maintain 50% of fluorescent orange sheeting reflectivity for year 3.

(c) Years 11 through 12

Replace 50% of the sheeting required to restore the sign face to its original effectiveness.

D. CERTIFICATION

Provide a Type 6 material certification in accordance with Article 106-3 of the Standard Specifications for all retroreflective sheeting used in the manufacture of signs certifying that the sheeting meets Section 1092 of the Standard Specifications.

18.3. CONSTRUCTION METHODS

Install signs with applicable mounting hardware. Comply with sign offsets and mounting heights as shown in the MUTCD and the Roadway Standard Drawings No. 904.50.

For messenger cable mounting, install signs 6" minimum from signal heads.

For ground mounting, comply with Article 903-3 of the Standard Specifications.

For mast arm mounting, install attachment brackets to allow adjustment so signs:

(A) Are aimed in required direction,

(B) Are plumb as viewed from respective approaches,

(C) May be tilted forward or backward as required, and

(D) May be raised or lowered on mast arm throughout full length of sign.

18.4. MEASUREMENT AND PAYMENT

Sign for Signals will be measured and paid as the actual number of signs for signals, regardless of mounting method, furnished, installed and accepted.

Payment will be made under:

Sign for Signals.....Each

19. S IGNAL CABINET FOUNDATIONS

19.1. DESCRIPTION

Furnish and install signal cabinet foundations and all necessary hardware.

Furnish either poured concrete foundations or preformed cabinet pad foundations and all necessary hardware. Obtain approval of foundation type.

19.2. MATERIAL

A. General

Comply with Article 1000-4 (Portland Cement Concrete) of the Standard Specifications.

Furnish preformed cabinet pad foundation material, equipment and hardware under this section that is pre-approved on the ITS and Signals QPL.

B. Signal Cabinet Foundations

Provide foundations with a minimum pad area that extends 24" from front and back of cabinet and 3" from sides of cabinet.

Furnish cabinet foundations with chamfered top edges. Provide minimum Class B concrete.

Provide preformed cabinet pad foundations with 7"(l) x 18"(w) minimum opening for the entrance of conduits. For precast signal cabinet foundations, include steel reinforcement to ensure structural integrity during shipment and placing of item. Include four 3/4" coil thread inserts for lifting. Comply with Article 1077-16 of the Standard Specifications.

19.3. CONSTRUCTION METHODS

Comply with Section 825 of the Standard Specifications.

When using poured concrete foundations, use procedures, equipment and hardware as follows:

A. Locate new cabinets so as not to obstruct sight distance of vehicles turning on red.

B. Obtain approval for final cabinet foundation locations before pouring concrete base.

C. Do not install foundations over uncompacted fill or muck.

D. Hand tamp soil before placing concrete and ensure ground is level.

E. Maintain 12" minimum from service pole to closest point on foundation unless otherwise approved.

F. Use a minimum of four 1/2" diameter expanding type anchor bolts to secure cabinet to foundation.

G. Install minimum 4" above and 4" below finished grade.

H. Locate external stubbed out conduit at cabinet foundation so conduit is in middle of cabinet. Provide service conduit as the rightmost conduit coming into cabinet. Provide 2 spare conduits stubbed out; one pointed toward service pole and the other toward

direction of lead in cable. Inscribe identification arrow in foundation indicating direction of spare conduits.

I. Give cabinet foundation a broom finish.

J. Seal space between cabinet base and foundation with permanent, flexible, waterproof sealing material.

If using a preformed cabinet pad, follow applicable procedures in Subarticles 1750-3(A) through 1750-3(J) of the Standard Specifications.

Restore the disturbed ground surrounding the new cabinet foundation to its original, preconstruction condition as determined and approved by the Engineer.

For paved areas, replace removed or damages pavement with in-kind materials, matching the elevation, color, texture, finish, and general appearance of the surrounding pavement. Refer to Section 1 of these Project Special Provisions for additional requirements concerning sidewalks and curbs in historic districts. Replace concrete sidewalk in whole slabs from joint to joint and comply with Section 848 of the Standard Specifications. Replace sidewalk pavers using pavers of the same color, texture, shape, dimensions, and materials as the damaged or modified items. Place graded stone material to temporarily maintain pedestrian traffic where repairs cannot be performed immediately. Comply with Article 545-4 of the Standard Specifications.

For unpaved areas, backfill excavations with removed material, tamp the backfilled material, and rake smooth the top 1 ½ inches. Finish unpaved areas flush with surrounding natural ground and to match the original contour of the ground. Seed with the same type of grass as surrounding area and mulch the newly seeded area. If unpaved area was not grassed, replace the original ground cover in-kind as directed by the Engineer.

Complete repairs to and restoration of all ground (paved and unpaved) disturbed for construction within five consecutive calendar days following initials removal. If the Contractor fails to repair and restore the ground in accordance with these Project Special provisions within the time frame specified, the Department reserves the right to make the necessary repairs, and all expenses incurred by the Department in making the repairs and restoring the ground will be deducted from payment due the Contractor, plus $500 liquidated damage per occasion, per day, or any portion thereof, until corrected.

19.4. MEASUREMENT AND PAYMENT

Signal Cabinet Foundation will be measured and paid as the actual number furnished, installed and accepted.

4" Concrete Sidewalk will be measured and paid as the actual square yards of concrete furnished, installed, and accepted.

Brick Pavers will be measured and paid as the actual square footage of pavers furnished, installed, and accepted.

No measurement or payment will be made for restoration of the surrounding unpaved ground surfaces in accordance with these Project Special Provisions as such work will be considered incidental to furnishing and installing signal cabinet foundations.

No measurement or payment will be made for furnishing and installing and subsequently removing graded stone material for temporary maintenance of pedestrian traffic where a portion of an existing sidewalk has been removed as such work will be considered incidental to furnishing and installing signal cabinet foundations.

Payment will be made under:

Signal Cabinet Foundation ..... Each

4" Concrete Sidewalk ..... Square Yard

Brick Pavers ..... Square Foot

20. M ODIFY CABINET FOUNDATIONS

20.1. DESCRIPTION

Where approved by the Engineer, install conduit entrances into existing foundations in accordance with the plans and specifications. Modify existing foundations in accordance with the plans and specifications.

20.2. MATERIAL

Comply with Section 18 (Signal Cabinet Foundations) of these Project Special Provisions.

20.3. CONSTRUCTION METHODS

A. Install Conduit Entrance into Existing Foundation

Install Conduit Entrances into existing cabinet foundations by core drilling foundations to install additional conduit.

Maintain a minimum of 3" of cover between new conduit and edge of foundation. Maintain minimum clearances of 1" from the flange of the base adapter and 2" from existing conduits. Avoid damaging existing conduit, conductors and anchor bolts. Repair all such damages. Where approved by the Engineer, the foundation may be chipped instead of drilled for conduit entrance. When possible, maintain traffic signal operations while drilling is performed.

Bond new metallic conduit to the equipment ground bus.

After installation of conduit, place grout to seal around conduit and return the foundation to normal appearance.

B. Modify Foundation

Enlarge existing cabinet foundations to accommodate the new cabinet and/or to provide a maintenance technician pad.

Excavate the ground around the existing foundation to a depth sufficient to expose a minimum of 4" of the foundation below existing grade.

Rough the sides of the existing foundation from the top to a point 4" below grade by means of a chisel or other method approved by the Engineer.

Wash the sides of the foundation with water pressurized at 50 psi and thoroughly dry with compressed air.

Drill holes approximately 12"deep on 12"centers into the existing foundation. Install #4 dowels and epoxy into place. Provide dowels of the lengths in the table below.

Foundation Extension	Length of Dowel
> 16"	24"
> 6" and < 16"	17"
= 6"	14"

Use concrete to install the maintenance technician pad.

Form the sides of the modified foundation to a minimum depth of 4" below grade.

Position forms so that all existing exposed foundation surfaces at or above grade level will be matched.

Apply a coating of approved epoxy bonding agent to all exposed roughened concrete surfaces as recommended by the manufacturer.

Enlarge the foundation to the distance specified for new cabinet foundations. Provide a one inch chamfer on all new outside edges.

Maintenance technician pads should be added to the foundation to provide a minimum work area of 24" [length] x 30" [width] from both the front and rear doors of the cabinet.

20.4. MEASUREMENT AND PAYMENT

Conduit Entrance into Existing Foundation will be measured and paid as the actual number of conduit entrances drilled into existing cabinet foundations furnished, installed and accepted.

Modify Foundation for Controller Cabinet will be measured and paid as the actual number of existing cabinet foundations modified and accepted.

Payment will be made under:

Conduit Entrance into Existing Foundation .....Each

Modify Foundation for Controller Cabinet .....Each

21. CONTROLLERS WIT H CABINETS

21.1. DESCRIPTION

Furnish and install controllers with cabinets and all necessary hardware. Furnish all pole or foundation mounting hardware, detector sensor cards, external electrical service disconnects, one Corbin Number 2 cabinet key, one police panel key, conflict monitors or malfunction management units, surge protection, grounding systems, AC/DC isolator cards and all necessary hardware.

The Contractor shall develop cabinet prototypes for each configuration of controller and equipment cabinet to show how all hardware (controller, detectors, field Ethernet switches, etc.) and associated cabling called for in these Project Special Provisions will be installed and configured in the field. The cabinet prototypes shall be approved by the Engineer prior to the installation of the cabinet.

Hold three identical controller training sessions for maintenance personnel. Each of the identical training sessions shall consist of five (5) consecutive days, beginning on a Monday. Conduct one of these training sessions prior to the installation of any new controllers and cabinets on the Project.

Provide real-world coordinates for all installed or reused controller cabinets.

21.2. MATERIAL

A. General

Furnish material, equipment and hardware under this section that is pre-approved on the ITS and Signals QPL.

B. Type 2070L Controllers

Conform to CALTRANS *Transportation Electrical Equipment Specifications* (TEES) (dated August 16, 2002, plus Errata 1 dated October 27, 2003 and Errata 2 dated June 08, 2004) except as required herein.

Furnish Model 2070L controllers. Ensure that removal of the CPU module from the controller will place the intersection into flash.

The Department will provide software at the beginning of the burning-in period. Contractor shall give 5 working days notice before needing software. Program software provided by the Department.

Provide model 2070L controllers with the latest version of OS9 operating software and device drivers, composed of the unit chassis and at a minimum the following modules and assemblies:

- MODEL 2070 1B, CPU Module, Single Board
- MODEL 2070-2A, Field I/O Module (FI/O)
- MODEL 2070-3B, Front Panel Module (FP), Display B (8x40)
- MODEL 2070-4A, Power Supply Module, 10 AMP
- MODEL 2070-7A, Async Serial Com Module (9-pin RS-232)

C. General Cabinets

Provide a moisture resistant coating on all circuit boards.

Provide one 20 mm diameter radial lead UL-recognized metal oxide varistor (MOV) between each load switch field terminal and equipment ground. Electrical performance is outlined below.

PROPERTIES OF MOV SURGE PROTECTOR	
Maximum Continuous Applied Voltage at 185° F	150 VAC (RMS) 200 VDC
Maximum Peak 8x20μs Current at 185° F	6500 A
Maximum Energy Rating at 185° F	80 J
Voltage Range 1 mA DC Test at 77° F	212-268 V
Max. Clamping Voltage 8x20μs, 100A at 77° F	395 V
Typical Capacitance (1 MHz) at 77° F	1600 pF

Provide a power line surge protector that is a two-stage device that will allow connection of the radio frequency interference filter between the stages of the device. Ensure that a maximum continuous current is at least 10A at 120V. Ensure that the device can withstand a minimum of 20 peak surge current occurrences at 20,000A for an 8x20 microsecond waveform. Provide a maximum clamp voltage of 395V at 20,000A with a nominal series inductance of 200μh. Ensure that the voltage does not exceed 395V. Provide devices that comply with the following:

Frequency (Hz)	Minimum Insertion Loss (dB)
60	0
10,000	30
50,000	55
100,000	50
500,000	50
2,000,000	60
5,000,000	40
10,000,000	20
20,000,000	25

D. Type 170E Cabinets

1. Type 170 E Cabinets General:

Conform to the city of Los Angeles' Specification No. 54-053-08, *Traffic Signal Cabinet Assembly Specification* (dated July 2008), except as required herein.

Furnish model 336S pole mounted cabinets configured for 8 vehicle phases, 4 pedestrian phases, and 6 overlaps. When overlaps are required, provide auxiliary output files for the overlaps. Do not reassign load switches to accommodate overlaps unless shown on electrical details. Provide 336S pole mounted cabinets that are 46" high with 40" high internal rack assemblies.

Furnish model 332 base mounted cabinets configured for 8 vehicle phases, 4 pedestrian phases, and 6 overlaps. When overlaps are required, provide auxiliary output files for the overlaps. Do not reassign load switches to accommodate overlaps unless shown on electrical details.

Provide model 200 load switches, model 222 loop detector sensors, model 252 AC isolators, and model 242 DC isolators according to the electrical details. As a minimum, provide one (1) model 2018 conflict monitor, one (1) model 206L power supply unit, two (2) model 204 flashers, one (1) DC isolator (located in slot I14), and four (4) model 430 flash transfer relays (provide seven (7) model 430 flash transfer relays if auxiliary output file is installed) with each cabinet.

2. Type 170 E Cabinet Electrical Requirements:

Provide a cabinet assembly designed to ensure that upon leaving any cabinet switch or conflict monitor initiated flashing operation, the controller starts up in the programmed start up phases and start up interval.

Furnish two sets of non-fading cabinet wiring diagrams and schematics in a paper envelope or container and placed in the cabinet drawer.

All AC+ power is subject to radio frequency signal suppression.

Provide surge suppression in the cabinet for each type of cabinet device. Provide surge protection for the full capacity of the cabinet input file. Provide surge suppression devices that operate properly over a temperature range of -40° F to +185° F. Ensure the surge suppression devices provide both common and differential modes of protection.

Provide a pluggable power line surge protector that is installed on the back of the PDA (power distribution assembly) chassis to filter and absorb power line noise and switching transients. Ensure the device incorporates LEDs for failure indication and provides a dry relay contact closure for the purpose of remote sensing. Ensure the device meets the following specifications:

Peak Surge Current (Single pulse, 8x20µs).....20,000A
Occurrences (8x20µs waveform).....10 minimum @ 20,000A
Maximum Clamp Voltage.....395VAC
Operating Current.....15 amps
Response Time.....< 5 nanoseconds

Provide a loop surge suppressor for each set of loop terminals in the cabinet. Ensure the device meets the following specifications:

Peak Surge Current (6 times, 8x20µs)
(Differential Mode).....400A
(Common Mode).....1,000A
Occurrences (8x20µs waveform).....500 min @ 200A
Maximum Clamp Voltage
(Differential Mode @400A).....35V
(Common Mode @1,000A).....35V
Response Time.....< 5 nanoseconds
Maximum Capacitance.....35 pF

Provide a data communications surge suppressor for each communications line entering or leaving the cabinet. Ensure the device meets the following specifications:

Peak Surge Current (Single pulse, 8x20µs).....10,000A
Occurrences (8x20µs waveform).....100 min @ 2,000A
Maximum Clamp Voltage.....Rated for equipment protected

Response Time.....< 1 nanosecond
Maximum Capacitance.....1,500 pF
Maximum Series Resistance.....15Ω

Provide a DC signal surge suppressor for each DC input channel in the cabinet. Ensure the device meets the following specifications:

Peak Surge Current (Single pulse, 8x20µs).....10,000A
Occurrences (8x20µs waveform).....100 @ 2,000A
Maximum Clamp Voltage.....30V
Response Time.....< 1 nanosecond

Provide a 120 VAC signal surge suppressor for each AC+ interconnect signal input. Ensure the device meets the following specifications:

Peak Surge Current (Single pulse, 8x20µs).....20,000A
Maximum Clamp Voltage.....350VAC
Response Time.....< 200 nanoseconds
Discharge Voltage.....<200 Volts @ 1,000A
Insulation Resistance.....≥100 MΩ

Provide conductors for surge protection wiring that are of sufficient size (ampacity) to withstand maximum overcurrents which could occur before protective device thresholds are attained and current flow is interrupted.

If additional surge protected power outlets are needed to accommodate fiber transceivers, modems, etc., install a UL listed, industrial, heavy-duty type power outlet strip with a minimum rating of 15 A / 125 VAC, 60 Hz. Provide a strip that has a minimum of 3 grounded outlets. Ensure the power outlet strip plugs into one of the controller unit receptacles located on the rear of the PDA. Ensure power outlet strip is mounted securely; provide strain relief if necessary.

Provide a door switch in the front and a door switch in the rear of the cabinet that will provide the controller unit with a Door Ajar alarm when either the front or the rear door is open. Ensure the door switches apply DC ground to the Input File when either the front door or the rear door is open.

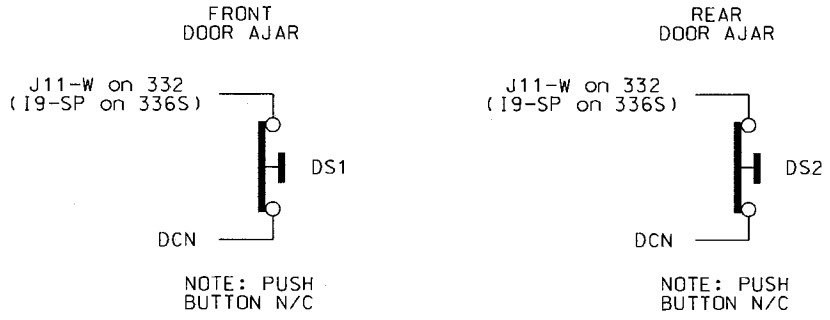

Furnish a fluorescent fixture in the rear across the top of the cabinet and another fluorescent fixture in the front across the top of the cabinet at a minimum. Ensure that the fixtures provide sufficient light to illuminate all terminals, labels, switches, and devices in the cabinet. Conveniently locate the fixtures so as not to interfere with a technician's ability to perform work on any devices or terminals in the cabinet. Provide a protective diffuser to cover exposed bulbs. Install 16 watt T-4 lamps in the fluorescent fixtures. Provide a door switch to provide power to each fixture when the respective door is open. Wire the fluorescent fixtures to the 15 amp ECB (equipment circuit breaker).

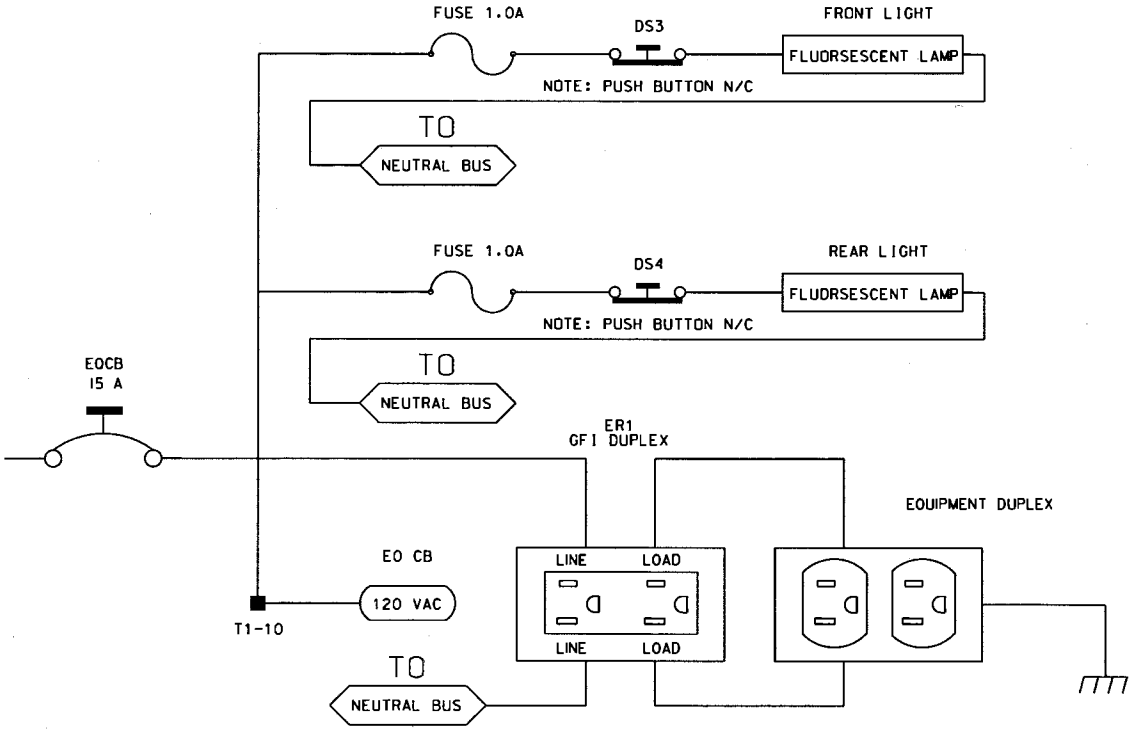

Furnish a police panel with a police panel door. For model 336S cabinets, mount the police panel on the rear door. Ensure that the police panel door permits access to the police panel when the main door is closed. Ensure that no rainwater can enter the cabinet even with the police panel door open. Provide a police panel door hinged on the right side as viewed from the front. Provide a police panel door lock that is keyed to a standard police/fire call box key. In addition to the requirements of LA Specification No. 54-053-08, provide the police panel with a toggle switch connected to switch the intersection operation between normal stop-and-go operation (AUTO) and manual operation (MANUAL). Ensure that manual control can be implemented using inputs and software such that the controller provides full programmed clearance times for the yellow clearance and red clearance for each phase while under manual control.

Provide a 1/4-inch locking phone jack in the police panel for a hand control to manually control the intersection. Provide sufficient room in the police panel for storage of a hand control and cord.

Ensure the 336S cabinet Input File is wired as follows:

336S Cabinet Port-Bit/C-1 Pin Assignment														
Slot #	1	2	3	4	5	6	7	8	9	10	11	12	13	14
C-1 (Spares)	59	60	61	62	63	64	65	66	75	76	77	78	79	80
Port C-1	3-2 56	1-1 39	3-4 58	1-3 41	3-1 55	1-2 40	3-3 57	1-4 42	2-5 51	5-5 71	5-6 72	5-1 67	5-2 68	6-7 81
Port C-1	2-1 47	1-5 43	2-3 49	1-7 45	2-2 48	1-6 44	2-4 50	1-8 46	2-6 52	5-7 73	5-8 74	5-3 69	5-4 70	6-8 82

For model 332 base mounted cabinets, ensure terminals J14-E and J14-K are wired together on the rear of the Input File. Connect TB9-12 (J14 Common) on the Input Panel to T1-2 (AC-) on the rear of the PDA.

Provide detector test switches mounted at the top of the cabinet rack or other convenient location which may be used to place a call on each of eight phases based on the chart below. Provide three positions for each switch: On (place call), Off (normal detector operation), and Momentary On (place momentary call and return to normal detector operation after switch is released). Ensure that the switches are located such that the technician can read the controller display and observe the intersection.

Connect detector test switches for cabinets as follows:

336S Cabinet		332 Cabinet	
Detector Call Switches	**Terminals**	**Detector Call Switches**	**Terminals**
Phase 1	I1-F	Phase 1	I1-W
Phase 2	I2-F	Phase 2	I4-W
Phase 3	I3-F	Phase 3	I5-W
Phase 4	I4-F	Phase 4	I8-W
Phase 5	I5-F	Phase 5	J1-W
Phase 6	I6-F	Phase 6	J4-W
Phase 7	I7-F	Phase 7	J5-W
Phase 8	I8-F	Phase 8	J8-W

Provide the PCB 28/56 connector for the conflict monitor unit (CMU) with 28 independent contacts per side, dual-sided with 0.156 inch contact centers. Provide the PCB 28/56 connector contacts with solder eyelet terminations. Ensure all connections to the PCB 28/56 connector are soldered to the solder eyelet terminations.

Ensure that all cabinets have the CMU connector wired according to the 332 cabinet connector pin assignments (include all wires for auxiliary output file connection). Wire pins 13, 16, R, and U of the CMU connector to a separate 4 pin plug, P1, as shown below. Provide a second plug, P2, which will mate with P1 and is wired to the auxiliary output file as shown below. Provide an additional plug, P3, which will mate with P1 and is wired to the pedestrian yellow circuits as shown below. When no auxiliary output file is installed in the cabinet, provide wires for the green and yellow inputs for channels 11, 12, 17, and 18, the red inputs for channels 17 and 18, and the wires for the P2 plug. Terminate the two-foot wires with ring type lugs, insulated, and bundled for optional use.

	P1		P2		P3	
PIN	FUNCTION	CONN TO	FUNCTION	CONN TO	FUNCTION	CONN TO
1	CH-9G	CMU-13	OLA-GRN	A123	2P-YEL	114
2	CH-9Y	CMU-16	OLA-YEL	A122	4P-YEL	105
3	CH-10G	CMU-R	OLB-GRN	A126	6P-YEL	120
4	CH-10Y	CMU-U	OLB-YEL	A125	8P-YEL	111

Connect the P20 terminal assembly (red monitor board) to a connector installed on the front of the type 2018 enhanced conflict monitor through a 3-1/2 foot 20-wire ribbon cable. Ensure that the ribbon cable connector and the connector on the conflict monitor are keyed to ensure proper connection. Ensure that removal of the P20 ribbon cable will cause the conflict monitor to recognize a latching fault condition and place the cabinet into flashing operation.

Wire the P20 connector to the traffic signal red displays to provide inputs to the conflict monitor as shown below. Ensure the pedestrian Don't Walk circuits are wired to channels 13 through 16 of the P20 connector. When no auxiliary output file is installed in the cabinet, provide wires for channels 9 through 12 reds. Terminate the two-foot wires with ring type lugs, insulated, and bundled for optional use.

Pin #	Function	Pin #	Function
1	Channel 15 Red	11	Channel 9 Red
2	Channel 16 Red	12	Channel 8 Red
3	Channel 14 Red	13	Channel 7 Red
4	GND	14	Channel 6 Red
5	Channel 13 Red	15	Channel 5 Red
6	Special Function 2	16	Channel 4 Red
7	Channel 12 Red	17	Channel 3 Red
8	Special Function 1	18	Channel 2 Red
9	Channel 10 Red	19	Channel 1 Red
10	Channel 11 Red	20	Red Enable

Ensure the controller unit outputs to the auxiliary output file are pre-wired to the C5 connector. When no auxiliary output file is installed in the cabinet, connect the C5 connector to a storage socket located on the Input Panel or on the rear of the PDA.

In addition to the requirements of LA Specification No. 54-053-08, ensure relay K1 on the Power Distribution Assembly (PDA) is a four pole relay and K2 on the PDA is a two pole relay.

Provide a two pole, ganged circuit breaker for the flash bus circuit. Ensure the flash bus circuit breaker is an inverse time circuit breaker rated for 10 amps at 120 VAC with a minimum of 10,000 RMS symmetrical amperes short circuit current rating. Do not provide the auxiliary switch feature on the flash bus circuit breaker. Ensure the ganged flash bus circuit breaker is certified by the circuit breaker manufacturer to provide gang tripping operation.

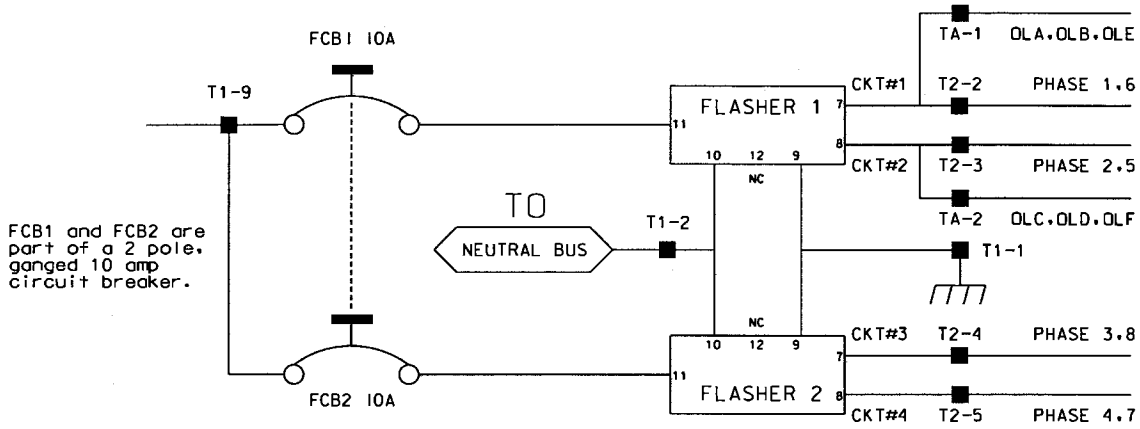

Ensure auxiliary output files are wired as follows:

AUXILIARY OUTPUT FILE TERMINAL BLOCK TA ASSIGNMENTS	
POSITION	**FUNCTION**
1	Flasher Unit #1, Circuit 1/FTR1 (OLA, OLB)/FTR3 (OLE)
2	Flasher Unit #1, Circuit 2/FTR2 (OLC, OLD)/FTR3 (OLF)
3	Flash Transfer Relay Coils
4	AC -
5	Power Circuit 5
6	Power Circuit 5
7	Equipment Ground Bus
8	NC

Provide four spare load resistors mounted in each cabinet. Ensure each load resistor is rated as shown in the table below. Wire one side of each load resistor to AC-. Connect the other side of each resistor to a separate terminal on a four (4) position terminal block. Mount the load resistors and terminal block either inside the back of Output File No. 1 or on the upper area of the Service Panel.

ACCEPTABLE LOAD RESISTOR VALUES	
VALUE (ohms)	**WATTAGE**
1.5K – 1.9 K	25W (min)
2.0K – 3.0K	10W (min)

Provide Model 200 load switches, Model 204 flashers, Model 242 DC isolators, Model 252 AC isolators, and Model 206L power supply units that conform to CALTRANS' "*Transportation Electrical Equipment Specifications*" dated March 12, 2009 with Erratum 1.

3. Type 170 E Cabinet Physical Requirements:

Do not mold, cast, or scribe the name "City of Los Angeles" on the outside of the cabinet door as specified in LA Specification No. 54-053-08. Do not provide a Communications Terminal Panel as specified in LA Specification No. 54-053-08. Do not provide terminal block TBB on the Service

Panel. Do not provide Cabinet Verification Test Program software or associated test jigs as specified in LA Specification No. 54-053-08.

Furnish unpainted, natural, aluminum cabinet shells, except at locations listed below and in the Plans where a painted finish is required.

- 09-0212 Innes Street Jackson Street
- 09-0214 Innes Street Church Street
- 09-0220 Main Street Horah Street
- 09-0221 Main Street Bank Street
- 09-0222 Main Street Fisher Street
- 09-0223 Main Street Innes Street
- 09-0224 Main Street Council Street
- 09-0225 Main Street Liberty Street
- 09-0226 Main Street Kerr Street
- 09-0227 Main Street Henderson Street
- 09-0228 Main Street Eleventh Street
- 09-0231 Innes Street Lee Street
- 09-0236 Innes Street Depot Street
- 09-0246 Fulton Street Monroe Street
- 09-0276 Ellis Street Monroe Street
- CITY-04 Ellis Street Horah Street
- CITY-05 Fulton Street Horah Street
- CITY-06 Church Street Horah Street

Painted finishes shall be applied at the factory and shall conform to the following specifications:

- Any required base adapter, integrated base adapter, or extender shall have a shop painted finish coat.
- All steel components (including nuts, bolts, screws, etc.) shall have a shop painted finish coat.
- The color shall be green #14036 as shown on Federal Standards Color Chart 595-B and as approved by the Engineer.
- The finish coating shall be an electrostatically applied, heat curable, thermosetting powdered coating. The material to be painted shall be pre-treated and the coating shall be cured according to manufacturers' recommendations.

Ensure that all non-aluminum hardware on the cabinet is stainless steel or a Department approved non-corrosive alternate.

Ensure the lifting eyes, gasket channels, police panel, and all supports welded to the enclosure and doors are fabricated from 0.125 inch minimum thickness aluminum sheet and meet the same standards as the cabinet and doors.

Provide front and rear doors with latching handles that allow padlocking in the closed position. Furnish 0.75 inch minimum diameter stainless steel handles with a minimum 0.5 inch shank. Place

the padlocking attachment at 4.0 inches from the handle shank center to clear the lock and key. Provide an additional 4.0 inches minimum gripping length.

Provide Corbin #2 locks on the front and rear doors. Provide one (1) Corbin #2 and one (1) police master key with each cabinet. Ensure main door locks allow removal of keys in the locked position only.

Provide a surge protection panel with 16 loop surge protection devices and designed to allow sufficient free space for wire connection/disconnection and surge protection device replacement. For model 332 cabinets, provide an additional 20 loop surge protection devices. Provide an additional two AC+ interconnect surge devices to protect one slot and eight DC surge protection devices to protect four slots. Provide no protection devices on slot I14.

For pole mounted cabinets, mount surge protection devices for the AC+ interconnect inputs, inductive loop detector inputs, and low voltage DC inputs on a swing down panel assembly fabricated from sturdy aluminum. Attach the swing down panel to the bottom rear cabinet rack assembly using thumb screws. Ensure the swing down panel allows for easy removal of the input file without removing the surge protection panel assembly or its parts. Have the surge protection devices mounted horizontally on the panel and soldered to the feed through terminals of four 14 position terminal blocks with #8 screws mounted on the other side. Ensure the top row of terminals is connected to the upper slots and the bottom row of terminals is connected to the bottom slots. Provide a 15 position copper equipment ground bus attached to the field terminal side (outside) of the swing down panel for termination of loop lead-in shield grounds. Ensure that a Number 4 AWG green wire connects the surge protection panel assembly ground bus to the main cabinet equipment ground.

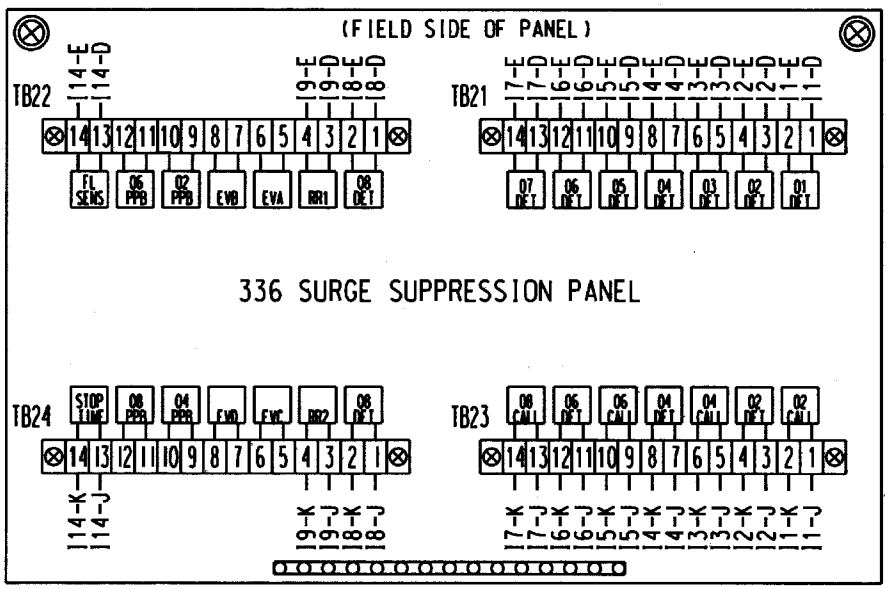

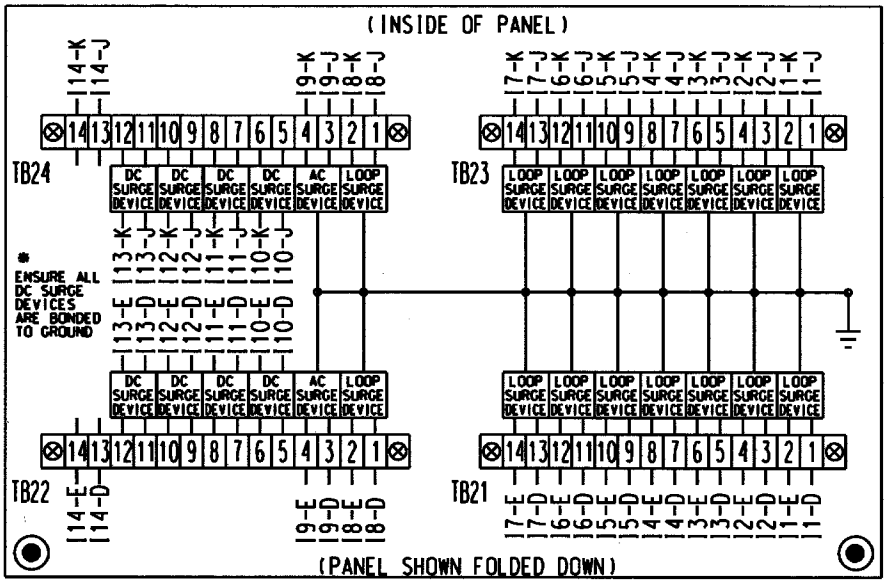

For base mounted cabinets, mount surge protection panels on the left side of the cabinet as viewed from the rear. Attach each panel to the cabinet rack assembly using bolts and make it easily removable. Mount the surge protection devices in vertical rows on each panel and connect the devices to one side of 12 position, double row terminal blocks with #8 screws. For each surge protection panel, terminate all grounds from the surge protection devices on a copper equipment ground bus attached to the surge protection panel. Wire the terminals to the rear of a standard input file using spade lugs for input file protection.

Provide permanent labels that indicate the slot and the pins connected to each terminal that may be viewed from the rear cabinet door. Label and orient terminals so that each pair of inputs is next to each other. Indicate on the labeling the input file (I or J), the slot number (1-14) and the terminal pins of the input slots (either D & E for upper or J & K for lower).

Provide a minimum 14 x 16 inch pull out, hinged top shelf located immediately below controller mounting section of the cabinet. Ensure the shelf is designed to fully expose the table surface outside the controller at a height approximately even with the bottom of the controller. Ensure the shelf has a storage bin interior which is a minimum of 1 inch deep and approximately the same dimensions as the shelf. Provide an access to the storage area by lifting the hinged top of the shelf. Fabricate the shelf and slide from aluminum or stainless steel and ensure the assembly can support the 2070L controller plus 15 pounds of additional weight. Ensure shelf has a locking mechanism to secure it in the fully extended position and does not inhibit the removal of the 2070L controller or removal of cards inside the controller when fully extended. Provide a locking mechanism that is easily released when the shelf is to be returned to its non-use position directly under the controller.

4. Model 2018 Enhanced Conflict Monitor:

Furnish Model 2018 Enhanced Conflict Monitors that provide monitoring of 18 channels. Ensure each channel consists of a green, yellow, and red field signal input. Ensure that the conflict monitor meets or exceeds CALTRANS' Transportation Electrical Equipment Specifications dated March 12, 2009 with Erratum 1 (hereafter referred to as CALTRANS' 2009 TEES) for a model 210 monitor unit and other requirements stated in this specification.

Ensure the conflict monitor is provided with an 18 channel conflict programming card. Pin EE and Pin T of the conflict programming card shall be connected together. Pin 16 of the conflict programming card shall be floating. Ensure that the absence of the conflict programming card will cause the conflict monitor to trigger (enter into fault mode), and remain in the triggered state until the programming card is properly inserted and the conflict monitor is reset.

Provide a conflict monitor that incorporates LED indicators into the front panel to dynamically display the status of the monitor under normal conditions and to provide a comprehensive review of field inputs with monitor status under fault conditions. Ensure that the monitor indicates the channels that were active during a conflict condition and the channels that experienced a failure for all other per channel fault conditions detected. Ensure that these indications and the status of each channel are retained until the Conflict Monitor is reset. Furnish LED indicators for the following:

- AC Power (Green LED indicator)
- VDC Failed (Red LED indicator)
- WDT Error (Red LED indicator)
- Conflict (Red LED indicator)
- Red Fail (Red LED indicator)
- Dual Indication (Red LED indicator)
- Yellow/Clearance Failure (Red LED indicator)
- PCA/PC Ajar (Red LED indicator)
- Monitor Fail/Diagnostic Failure (Red LED indicator)
- 54 Channel Status Indicators (1 Red, 1 Yellow, and 1 Green LED indicator for each of the 18 channels)

Provide a switch to set the Red Fail fault timing. Ensure that when the switch is in the ON position the Red Fail fault timing value is set to 1350 +/- 150ms (2018 mode). Ensure that when the switch is in the OFF position the Red Fail fault timing value is set to 850 +/- 150ms (210 mode).

Provide a switch to set the Watchdog fault timing. Ensure that when the switch is in the ON position the Watchdog fault timing value is set to 1.0 +/- 0.1s (2018 mode). Ensure that when the switch is in the OFF position the Watchdog fault timing value is set to 1.5 +/- 0.1s (210 mode).

Provide a jumper or switch to set the AC line brown-out levels. Ensure that when the jumper is present or the switch is in the ON position the AC line dropout voltage threshold is 98 +/- 2 Vrms, the AC line restore voltage threshold is 103 +/- 2 Vrms, and the AC line brown-out timing value is set to 400 +/- 50ms (2018 mode). Ensure that when the jumper is not present or the switch is in the OFF position the AC line dropout voltage threshold is 92 +/- 2 Vrms, the AC line restore voltage threshold is 98 +/- 2 Vrms, and the AC line brown-out timing value is set to 80 +/- 17ms (210 mode).

Provide a jumper or switch that will enable and disable the Watchdog Latch function. Ensure that when the jumper is not present or the switch is in the OFF position the Watchdog Latch function is disabled. In this mode of operation, a Watchdog fault will be reset following a power loss, brownout, or power interruption. Ensure that when the jumper is present or the switch is in the ON position the Watchdog Latch function is enabled. In this mode of operation, a Watchdog fault will be retained until a Reset command is issued.

Provide a jumper that will reverse the active polarity for pin #EE (output relay common). Ensure that when the jumper is not present pin #EE (output relay common) will be considered 'Active' at a voltage greater than 70 Vrms and 'Not Active' at a voltage less than 50 Vrms (Caltrans mode). Ensure that when the jumper is present pin #EE (output relay common) will be considered 'Active' at a voltage less than 50 Vrms and 'Not Active' at a voltage greater than 70 Vrms (Failsafe mode).

In addition to the connectors required by CALTRANS' 2009 TEES, provide the conflict monitor with a red interface connector mounted on the front of the monitor. Ensure the connector is a 20 pin, right angle, male connector with latching clip locks and polarizing keys. Ensure the right angle solder tails are designed for a 0.062" thick printed circuit board. Keying of the connector shall be between pins 3 and 5, and between 17 and 19. Ensure the connector has two rows of pins with the odd numbered pins on one row and the even pins on the other row. Ensure the connector pin row spacing is 0.10" and pitch is 0.10". Ensure the mating length of the connector pins is 0.24". Ensure the pins are finished with gold plating 30μ" thick.

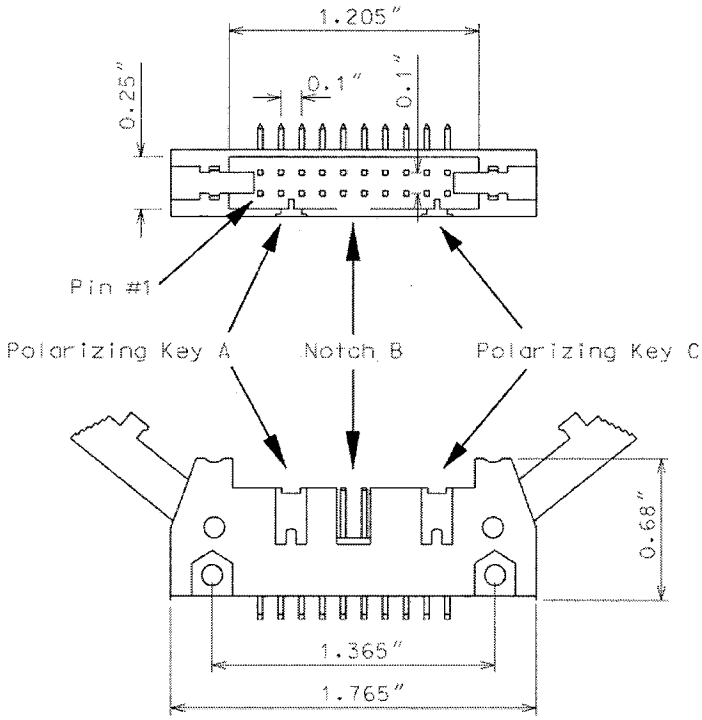

Ensure the red interface connector pins on the monitor have the following functions:

Pin #	Function	Pin #	Function
1	Channel 15 Red	2	Channel 16 Red
3	Channel 14 Red	4	Chassis Ground
5	Channel 13 Red	6	Special Function 2
7	Channel 12 Red	8	Special Function 1
9	Channel 10 Red	10	Channel 11 Red
11	Channel 9 Red	12	Channel 8 Red
13	Channel 7 Red	14	Channel 6 Red
15	Channel 5 Red	16	Channel 4 Red
17	Channel 3 Red	18	Channel 2 Red
19	Channel 1 Red	20	Red Enable

Ensure that the removal of the P-20 red interface ribbon cable will cause the monitor to recognize a latching fault condition and place the cabinet into flashing operation.

Provide Special Function 1 and Special Function 2 inputs to the unit which shall disable only Red Fail Monitoring when either input is sensed active. A Special Function input shall be sensed active when the input voltage exceeds 70 Vrms with a minimum duration of 550 ms. A Special Function input shall be sensed not active when the input voltage is less than 50 Vrms or the duration is less than 250 ms. A Special Function input is undefined by these specifications and may or may not be sensed active when the input voltage is between 50 Vrms and 70 Vrms or the duration is between 250 ms and 550 ms.

Ensure the conflict monitor recognizes field signal inputs for each channel that meet the following requirements:

- consider a Red input greater than 70 Vrms and with a duration of at least 500 ms as an "on" condition;
- consider a Red input less than 50 Vrms or with a duration of less than 200 ms as an "off" condition (no valid signal);
- consider a Red input between 50 Vrms and 70 Vrms or with a duration between 200 ms and 500 ms to be undefined by these specifications;
- consider a Green or Yellow input greater than 25 Vrms and with a duration of at least 500 ms as an "on" condition;
- consider a Green or Yellow input less than 15 Vrms or with a duration of less than 200 ms as an "off" condition; and
- consider a Green or Yellow input between 15 Vrms and 25 Vrms or with a duration between 200 ms and 500 ms to be undefined by these specifications.

Provide a conflict monitor that recognizes the faults specified by CALTRANS' 2009 TEES and the following additional faults. Ensure the conflict monitor will trigger upon detection of a fault and will remain in the triggered (in fault mode) state until the unit is reset at the front panel or through the external remote reset input for the following failures:

1. **Red Monitoring or Absence of Any Indication (Red Failure):** A condition in which no "on" voltage signal is detected on any of the green, yellow, or red inputs to a given monitor channel. If a signal is not detected on at least one input (R, Y, or G) of a conflict monitor channel for a period greater than 1000 ms when used with a 170 controller and 1500 ms when used with a 2070L controller, ensure monitor will trigger and put the intersection into flash. If the absence of any indication condition lasts less that 750 ms when used with a 170 controller and 1200 ms when used with a 2070L controller, ensure conflict monitor will not trigger. Red fail monitoring shall be enabled on a per channel basis by the use of switches located on the conflict monitor. Have red monitoring occur when all of the following input conditions are in effect:

   a) Red Enable input to monitor is active (Red Enable voltages are "on" at greater than 70 Vrms, off at less than 50 Vrms, undefined between 50 and 70 Vrms), and

   b) Neither Special Function 1 nor Special Function 2 inputs are active.

   c) Pin #EE (output relay common) is not active

2. **Short/Missing Yellow Indication Fault (Clearance Error):** Yellow indication following a green is missing or shorter than 2.7 seconds (with ± 0.1-second accuracy). If a channel fails to detect an "on" signal at the Yellow input for a minimum of 2.7 seconds (± 0.1 second) following the detection of an "on" signal at a Green input for that channel, ensure that the monitor triggers and generates a clearance/short yellow error fault indication. Short/missing yellow (clearance) monitoring shall be enabled on a per channel basis by the use of switches located on the conflict monitor. This fault shall not occur when the channel is programmed for Yellow Inhibit, when the Red Enable signal is inactive or pin #EE (output relay common) is active.

3. **Dual Indications on the Same Channel:** In this condition, more than one indication (R,Y,G) is detected as "on" at the same time on the same channel. If dual indications are detected for a period greater than 500 ms, ensure that the conflict monitor triggers and displays the proper failure indication (Dual Ind fault). If this condition is detected for less

than 200 ms, ensure that the monitor does not trigger. G-Y-R dual indication monitoring shall be enabled on a per channel basis by the use of switches located on the conflict monitor. G-Y dual indication monitoring shall be enabled for all channels by use of a switch located on the conflict monitor. This fault shall not occur when the Red Enable signal is inactive or pin #EE (output relay common) is active.

4. **Configuration Settings Change:** The configuration settings are comprised of (as a minimum) the permissive diode matrix, dual indication switches, yellow disable jumpers, any option switches, any option jumpers, and the Watchdog Enable switch. Ensure the conflict monitor compares the current configuration settings with the previous stored configuration settings on power-up, on reset, and periodically during operation. If any of the configuration settings are changed, ensure that the conflict monitor triggers and causes the program card indicator to flash. Ensure that configuration change faults are only reset by depressing and holding the front panel reset button for a minimum of three seconds. Ensure the external remote reset input does not reset configuration change faults.

Ensure the conflict monitor will trigger and the AC Power indicator will flash at a rate of 2 Hz ± 20% with a 50% duty cycle when the AC Line voltage falls below the "drop-out" level. Ensure the conflict monitor will resume normal operation when the AC Line voltage returns above the "restore" level. Ensure the AC Power indicator will remain illuminated when the AC voltage returns above the "restore" level. Should an AC Line power interruption occur while the monitor is in the fault mode, then upon restoration of AC Line power, the monitor will remain in the fault mode and the correct fault and channel indicators will be displayed.

Provide a flash interval of at least 6 seconds and at most 10 seconds in duration following a power-up, an AC Line interruption, or a brownout restore. Ensure the conflict monitor will suspend all fault monitoring functions, close the Output relay contacts, and flash the AC indicator at a rate of 4 Hz ± 20% with a 50% duty cycle during this interval. Ensure the termination of the flash interval after at least 6 seconds if the Watchdog input has made 5 transitions between the True and False state and the AC Line voltage is greater than the "restore" level. If the watchdog input has not made 5 transitions between the True and False state within 10 ± 0.5 seconds, the monitor shall enter a WDT error fault condition.

Ensure the conflict monitor will monitor an intersection with a minimum of four approaches using the four-section Flashing Yellow Arrow (FYA) vehicle traffic signal as outlined by the NCHRP 3-54 research project for protected-permissive left turn signal displays. Ensure the conflict monitor will operate in the FYA mode and FYAc (Compact) mode as specified below to monitor each channel for the following fault conditions: Conflict, Red Fail, Dual Indication, and Clearance. Provide a switch to select between the FYA mode and FYAc mode. Provide a switch to select each FYA phase movement for monitoring.

FYA mode

FYA Signal Head	Phase 1	Phase 3	Phase 5	Phase 7
Red Arrow	Channel 9 Red	Channel 10 Red	Channel 11 Red	Channel 12 Red
Yellow Arrow	Channel 9 Yellow	Channel 10 Yellow	Channel 11 Yellow	Channel 12 Yellow
Flashing Yellow Arrow	Channel 9 Green	Channel 10 Green	Channel 11 Green	Channel 12 Green
Green Arrow	Channel 1 Green	Channel 3 Green	Channel 5 Green	Channel 7 Green

FYAc mode

FYA Signal Head	Phase 1	Phase 3	Phase 5	Phase 7
Red Arrow	Channel 1 Red	Channel 3 Red	Channel 5 Red	Channel 7 Red
Yellow Arrow	Channel 1 Yellow	Channel 3 Yellow	Channel 5 Yellow	Channel 7 Yellow
Flashing Yellow Arrow	Channel 1 Green	Channel 3 Green	Channel 5 Green	Channel 7 Green
Green Arrow	Channel 9 Green	Channel 9 Yellow	Channel 10 Green	Channel 10 Yellow

Ensure that the conflict monitor will log at least nine of the most recent events detected by the monitor in non-volatile EEPROM memory (or equivalent). For each event, record at a minimum the time, date, type of event, status of each field signal indication with RMS voltage, and specific channels involved with the event. Ensure the conflict monitor will log the following events: monitor reset, configuration, previous fault, and AC line. Furnish the signal sequence log that shows all channel states (Greens, Yellows, and Reds) and the Red Enable State for a minimum of 2 seconds prior to the current fault trigger point. Ensure the display resolution of the inputs for the signal sequence log is not greater than 50 ms.

Provide a RS-232C/D compliant port (DB-9 female connector) on the front panel of the conflict monitor in order to provide communications from the conflict monitor to the 170/2070L controller or to a Contractor-furnished laptop computer. Electrically isolate the port interface electronics from all monitor electronics, excluding Chassis Ground. Ensure that the controller can receive all event log information through a controller Asynchronous Communications Interface Adapter (Type 170E) or Async Serial Comm Module (2070L). Provide a Windows based graphic user interface software to communicate directly through the same monitor RS-232C/D compliant port to retrieve and view all event log information to a Contractor-furnished laptop computer. The RS-232C/D compliant port on the monitor shall allow the monitor to function as a DCE device with pin connections as follows:

Conflict Monitor RS-232C/D (DB-9 Female) Pinout		
Pin Number	**Function**	**I/O**
1	DCD	O
2	TX Data	O
3	RX Data	I
4	DTR	I
5	Ground	-
6	DSR	O
7	CTS	I
8	RTS	O
9	NC	-

MONITOR BOARD EDGE CONNECTOR

Pin #	Function (Back Side)	Pin #	Function (Component Side)
1	Channel 2 Green	A	Channel 2 Yellow
2	Channel 13 Green	B	Channel 6 Green
3	Channel 6 Yellow	C	Channel 15 Green
4	Channel 4 Green	D	Channel 4 Yellow
5	Channel 14 Green	E	Channel 8 Green
6	Channel 8 Yellow	F	Channel 16 Green
7	Channel 5 Green	H	Channel 5 Yellow
8	Channel 13 Yellow	J	Channel 1 Green
9	Channel 1 Yellow	K	Channel 15 Yellow
10	Channel 7 Green	L	Channel 7 Yellow
11	Channel 14 Yellow	M	Channel 3 Green
12	Channel 3 Yellow	N	Channel 16 Yellow
13	Channel 9 Green	P	Channel 17 Yellow
14	Channel 17 Green	R	Channel 10 Green
15	Channel 11 Yellow	S	Channel 11 Green
16	Channel 9 Yellow	T	Channel 18 Yellow
17	Channel 18 Green	U	Channel 10 Yellow
--		--	
18	Channel 12 Yellow	V	Channel 12 Green
19	Channel 17 Red	W	Channel 18 Red
20	Chassis Ground	X	Not Assigned
21	AC-	Y	DC Common
22	Watchdog Timer	Z	External Test Reset
23	+24VDC	AA	+24VDC
24	Tied to Pin 25	BB	Stop Time (Output)
25	Tied to Pin 24	CC	Not Assigned
26	Not Assigned	DD	Not Assigned
27	Relay Output, Side #3, N.O.	EE	Relay Output,Side #2,Common
28	Relay Output, Side #1, N.C.	FF	AC+

-- Slotted for keying between Pins 17/U and 18/V

CONFLICT PROGRAM CARD PIN ASSIGNMENTS

Pin #	Function (Back Side)	Pin #	Function (Component Side)
1	Channel 2 Green	A	Channel 1 Green
2	Channel 3 Green	B	Channel 2 Green
3	Channel 4 Green	C	Channel 3 Green
4	Channel 5 Green	D	Channel 4 Green
5	Channel 6 Green	E	Channel 5 Green
6	Channel 7 Green	F	Channel 6 Green
7	Channel 8 Green	H	Channel 7 Green
8	Channel 9 Green	J	Channel 8 Green
9	Channel 10 Green	K	Channel 9 Green
10	Channel 11 Green	L	Channel 10 Green
11	Channel 12 Green	M	Channel 11 Green
12	Channel 13 Green	N	Channel 12 Green
13	Channel 14 Green	P	Channel 13 Green
14	Channel 15 Green	R	Channel 14 Green
15	Channel 16 Green	S	Channel 15 Green
16	N/C	T	PC AJAR
17	Channel 1 Yellow	U	Channel 9 Yellow
18	Channel 2 Yellow	V	Channel 10 Yellow
19	Channel 3 Yellow	W	Channel 11 Yellow
20	Channel 4 Yellow	X	Channel 12 Yellow
21	Channel 5 Yellow	Y	Channel 13 Yellow
22	Channel 6 Yellow	Z	Channel 14 Yellow
23	Channel 7 Yellow	AA	Channel 15 Yellow
24	Channel 8 Yellow	BB	Channel 16 Yellow
--		--	
25	Channel 17 Green	CC	Channel 17 Yellow
26	Channel 18 Green	DD	Channel 18 Yellow
27	Channel 16 Green	EE	PC AJAR (Program Card)
28	Yellow Inhibit Common	FF	Channel 17 Green

-- Slotted for keying between Pins 24/BB and 25/CC

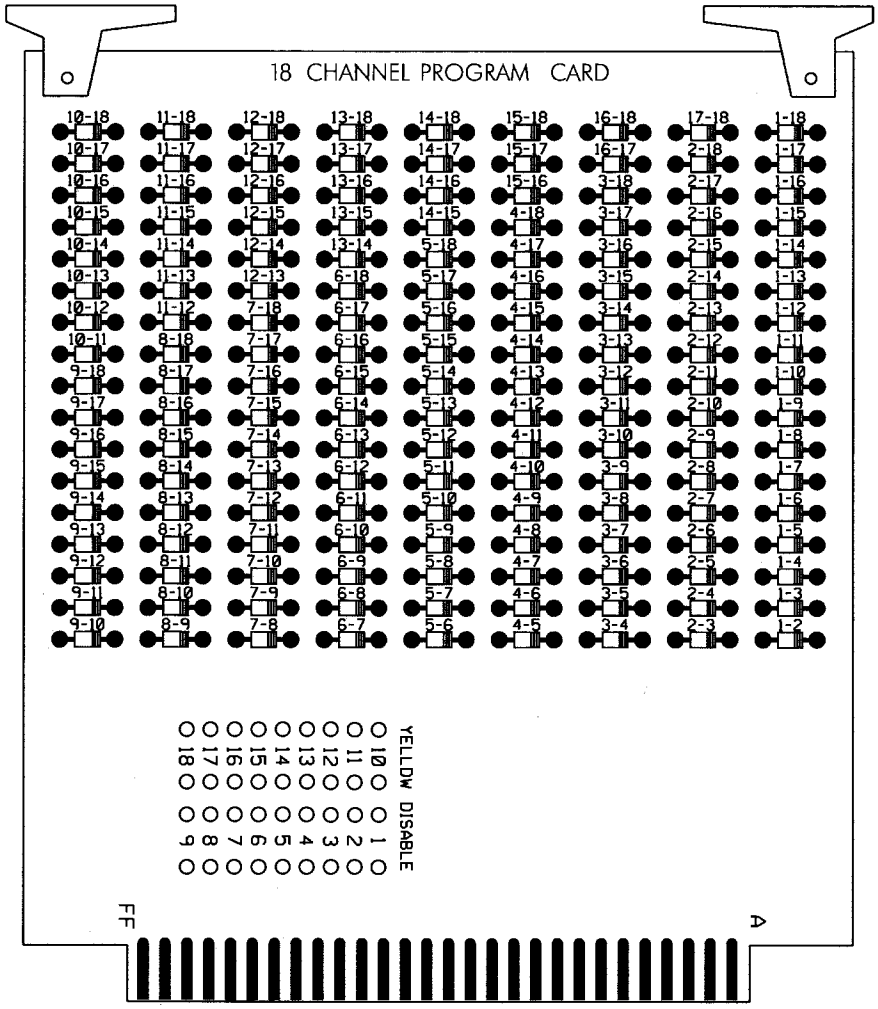

E. Type 170 Detector Sensor Units

Furnish detector sensor units that comply with Chapter 5 Section 1, "General Requirements," and Chapter 5 Section 2, "Model 222 & 224 Loop Detector Sensor Unit Requirements," of the CALTRANS "Transportation Electrical Equipment Specifications" dated March 12, 2009 with Erratum 1.

21.3. CONSTRUCTION METHODS

A. General

Remove existing controllers and cabinets where required. Remove maintenance diary from cabinet and place in new cabinet or deliver to the Engineer. Take existing equipment out of service only at the time directed.

Locate new cabinets so as not to obstruct sight distance of vehicles turning on red.

Install controllers, cabinets, detector sensor units and hardware that provide required phasing, color sequence, flash sequence, interconnection, railroad clearance and preemption and emergency vehicle clearance and preemption.

Stencil signal inventory number on cabinet side facing roadway. Use 3" black characters.

Provide external electrical service disconnect at all new and existing cabinet locations unless otherwise specified.

Do not program controller for late night flashing operation at railroad preemption installations. For all other installations, do not program controller for late night flashing operation unless otherwise directed. Ensure all signal heads for same approach flash concurrently during flashing operation.

Provide serial number and cabinet model number for each new controller and controller cabinet installed.

Install pole mounted cabinets so height to cabinet middle is 4 ft.

At locations shown in the Plans, reconfigure the typical controller cabinet layout such that the signal controller is installed at a lower height directly above the output files.

Activate controllers with proposed phasing and timing.

B. System Interconnection

When interconnection of signals is required (via fiber optics, twisted pair, ethernet, wireless, etc.), install communications interface equipment and hardware for signals. Demonstrate proper operation of interconnection using manual commands and upload/download capability to each local controller from the central server at the TOC after interconnection is complete.

Program telemetry command sequences and enable devices necessary for testing of communication between local controllers and central server at the TOC.

C. Workshop

Provide enclosed workshop to set up and test new controllers and cabinets before installation. Locate workshop within the City of Salibsury. Ensure workshop provides protection from weather and sufficient space to house 2 test observers, all necessary test equipment and material, controllers and cabinets.

Configure and test each controller and cabinet to match the proposed signal design. Ensure all equipment furnished and installed or modified by the Contractor at each location operates in full compliance with the plans and project special provisions. Test each controller and cabinet for proper color sequence, flashing operation, phase timings, preemption, coordination and conflict monitor programming or malfunction management unit programming. Ensure that simultaneous conflicting phase outputs will cause the cabinet to revert to flashing operation. For intersections with any type of preemption, submit a completed Preemption Test Procedure Checklist. The checklist is located on the Department's website.

Test the cabinet and controller for eight hours minimum. Following this test and before installation, the Engineer will inspect the equipment in operation. The Engineer may require other tests to ensure proper operation. These tests shall be at no additional cost to the Department.

21.4. MEASUREMENT AND PAYMENT

Controller with Cabinet (____) will be measured and paid as the actual number of each type of controllers with cabinets furnished, installed and accepted.

Controller with Cabinet and Aux File (___) will be measured and paid as the actual number of each type of controllers with cabinets that have an auxiliary output files, furnished, installed and accepted.

Controller with Reconfigured Cabinet (___) will be measured and paid as the actual number of each type of controllers with cabinets that have a reconfigured layout that lowers the controller height, furnished, installed and accepted.

Detector Card (____) will be measured and paid as the actual number furnished, installed and accepted.

No measurement will be made of conflict monitors, malfunction management units, grounding systems, and workshop as these will be incidental to furnishing and installing controllers with cabinets.

Payment will be made under:

Controller with Cabinet (2070L, 332 Base Mounted) ..... Each
Controller with Cabinet (2070L, 332 Base Mounted, Painted Finish) ..... Each
Controller with Cabinet and Aux File (2070L, 332 Base Mounted) ..... Each
Controller with Cabinet and Aux File (2070L, 332 Base Mounted, Painted Finish) ..... Each
Controller with Reconfigured Cabinet (2070L, 332 Base Mounted) ..... Each
Detector Card (2070L) ..... Each

22. CAB INET BASE ADAPTER/EXTENDER

22.1. DESCRIPTION

Furnish and install cabinet base adapters and extenders with all necessary hardware for Type 170 cabinets.

22.2. MATERIAL

Furnish material, equipment and hardware under this section that is pre-approved on the ITS and Signals QPL.

Fabricate base adapters and extenders from the same materials and with the same finish as cabinet housing. Fabricate base adapter and extender in the same manner as controller cabinets, meeting all applicable specifications called for in Section 6.7 of CALTRANS TEES. Provide base adapters and extenders a height of at least 12".

Furnish base adapters, integrated base adapters, and extenders with a painted finish at locations shown in the Plans. Painted finishes shall be applied at the factory and shall conform to the following specifications:

- All steel components (including nuts, bolts, screws, etc.) shall have a shop painted finish coat.
- The color shall be green #14036 as shown on Federal Standards Color Chart 595-B and as approved by the Engineer.
- The finish coating shall be an electrostatically applied, heat curable, thermosetting powdered coating. The material to be painted shall be pre-treated and the coating shall be cured according to manufacturers' recommendations.

22.3. CONSTRUCTION METHODS

Install cabinet base adapter at locations requiring new Model 332A cabinet on existing/modified foundation.

Install cabinet base extender at locations requiring new Model 332A cabinet on new foundation or existing Model 332A cabinet that does not have cabinet base extender.

Where Model 336 cabinet is used as base mount cabinet, install adapter or extender, as required.

Use permanent, flexible waterproof sealing material to:

A. Seal between cabinet base and cabinet base adapter/extender,

B. Seal 2-piece cabinet base adapter/extender seams, and

C. Seal space between cabinet base adapter/extender and foundation.

22.4. MEASUREMENT AND PAYMENT

Cabinet Base Adapter (___) will be measured and paid as the actual number of each type furnished, installed and accepted.

Cabinet Base Extender (___) will be measured and paid as the actual number of each type furnished, installed and accepted.

Pay Item Pay Unit

Cabinet Base Adapter .....Each
Cabinet Base Adapter (Painted Finish).....Each
Cabinet Base Extender .....Each
Cabinet Base Extender (Painted Finish) .....Each

23. CCT V FIELD EQUIPMENT

23.1. DESCRIPTION

Furnish and install new CCTV cameras, camera control equipment, and pole mounted cabinets at locations shown in the Plans.

Remove existing City-maintained CCTV cameras at locations shown in the Plans. Remove the existing camera, pole attachment hardware, cabling, control and communications equipment, and cabinet. Reuse existing wood pole, risers, fiber optic communications cable, and electrical service when installing new CCTV camera assembly and cabinet at these locations.

23.2. MATERIAL

A. General

Furnish and install, at the locations shown on the Plans, new CCTV camera assemblies. CCTV camera assembly includes camera, lens, housing, pan and tilt unit, pole mounting adapter, camera controller receiver/driver, and camera cabling.

B. Digital Camera

Furnish new digital pan-tilt-zoom day/night color cameras. The cameras shall meet the following minimum requirements:

1. Mechanical Specifications

Sensor:

- 1.2MPixel, or better, progressive scan digital imaging sensor camera
- Sensor Resolution: 1280 x 960
- Effective resolution of 1280 x 720p
- Optical Zoom 18x
- Lens: 4.7mm to 84.6mm, minimum
- Sensor size 1/3"
- Electronic-Shutter: dip-switch selectable electronic shutter with speed range from 1/30 of a second (off) to 1/10,000 of a second
- Overexposure protection: The camera shall have built-in circuitry or a protection device to prevent any damage to the camera when pointed at strong light sources, including the sun
- Ability to see in low light conditions
- Scene Illumination Sensitivity at 50 IRE:
    - 1.8 Lux (0.18 fc) @ 1/30 shutter, or better (color mode)
    - 0.02 Lux (0.002 fc) @ 1/4 shutter, or better (mono mode)

- Aspect Ratios Supported: 4:3 and 16:9
- Wide dynamic range (WDR) operation with manual override option
- White Balance (Auto/Manual)
- Electronic image stabilization
- Automatic focus: Automatic with manual override
- Iris control (Auto/Manual)
- Day/Night IR cut filter

Operations/Environment:

- high-speed positioner-style camera
- • Tilt Range: -90 to +0 degrees
- 360° continuous horizontal rotation
- Auto-flip at bottom of tilt travel
- # of Sector/Privacy Zones: 8 minimum
- Positioning to 0.2° accuracy
- Preset Pan speed: 180 deg/sec minimum
- Preset Tilt speed: 160 deg/sec minimum
- Manual Pan speed: 0.1 to 80 deg/sec
- Manual Tilt speed: 0.1 to 40 deg/sec
- Video Tours: 8 minimum
- Presets: 64 minimum
- Built-in Title Generation (Camera ID, and Preset Titles, at a minimum)

Each CCTV assembly shall accept status information from pan/tilt/zoom equipment for preset positioning of those components. The CCTV assembly shall accept "goto" preset commands from the test panel and central software, decode the command data, perform error checking, and drive the pan/tilt and zoom lens to the correct preset position. The preset commands will consist of unique values for the desired pan, tilt, zoom, and focus positions.

2. Electrical Specifications

The CCTV camera system shall operate using a nominal input voltage at the cabinet of 120 volts alternating current (VAC). Ground loop isolators shall be provided and installed for each CCTV. The camera power supply will operate with an input voltage of 115 VAC or less, unless otherwise approved by the Department. Power consumption shall not exceed 125 watts.

3. Environmental Specifications

Camera housing shall be a weather-tight enclosure carrying a NEMA 4X/IP-67 rating, or better.

All external connectors and cable through-holes shall have weather-tight fittings compatible with the size and type of cable/connectors used. Visible or exposed wires protruding outside of the housing enclosure are not permissible.

The CCTV camera shall perform all required functions during and after being subjected to an ambient operating temperature range of -30° to 165° F, as defined in the environmental requirements section of the NEMA TS 2 standard. Humidity rating shall be 5% to 95%, non-condensing. Documentation shall be provided to the Department verifying that the CCTV camera manufacturer certifies that the device has successfully completed environmental testing as defined in the environmental requirements section of the NEMA TS 2 standard. A heater/blower shall be used to maintain internal temperatures within the manufacturer required operating temperatures for their equipment.

The housing shall protect the camera and other internal components from rain, dust, corrosive elements, and typical conditions found at a roadside environment. The contractor shall verify and provide the department with documentation that the CCTV camera, mounting hardware, and any other camera-related material that is exposed to the environment are designed for 90 mph winds, with a 30% gust factor, in accordance with the 1994 AASHTO Standard Specifications.

4. Physical Specifications

The camera housing and associated equipment shall be an outdoor rated PTZ camera assembly. The camera housing shall be equipped with a sunshield to reduce the solar heating of the camera and glare. The total weight of CCTV cameras (including the housing, sunshield, and all internal components) shall be less than 18.0 pounds. The outer body of the camera housing shall be distortion free clear plastic over the lens area. The outer body of the camera housing shall be white in color for the remainder of the housing.

The contractor shall furnish each camera assembly with electrical cables used for video feed, camera control including PTZ, communications signaling, and power supply. CCTV composite cables shall be connectorized at the camera end and unconnectorized in the cabinet. The Contractor will be responsible for terminating the unconnectorized end to the TVSS. The contractor shall provide a full length of cable from the CCTV camera to the cabinet with an additional 10 feet of slack in the cabinet and with sufficient length for lowering device connectivity and splicing where applicable. The Contractor is responsible for determining the appropriate cable lengths required for each site.

Spliced cable, shield or conductor used for video, control, communications signaling, or power supply is not allowed. All conductors shall be identified by color and number. The contractor shall identify the conductor function in the documentation included in the camera assembly documentation. For the connectorized end, the contractor shall include a connector that is intended for use with the provided CCTV camera.

The cable furnished for power, signaling, control, and video must be compatible with these installation materials.

5. Communication Standards

The CCTV camera shall support the appropriate NTCIP 1205 communication protocol (version 1.08 or higher), ONVIF, or approved equal (at the sole discretion of the Engineer) to provide for full functionality/compatibility with the TOC's video software.

6. Networking Standards

- Network Connection: 10/100 Mbps auto-negotiate
- Frame Rate: (30, 15, 7, 4, 2, 1fps min.)
- Data Rate: scalable from 64k to 5Mbps per stream
- Built-in Web Server
- Unicast & multicast support
- Two simultaneous video streams (Dual H.264 and MJPEG):
    - Video 1: H.264 (Main Profile, at minimum)
    - Video 2: H.264 or MJPEG
- Multiple camera protocol support compatible with VDOT's central system software
- Supported Protocols: DNS, IGMPv2, NTP, RTSP, RTP, TCP, UDP, DHCP, HTTP, IPv4

The video camera shall allow for the simultaneous encoding and transmission of the two digital video streams - one in H.264 format (high-resolution) and one in H.264 or MJPEG format (low-resolution). High resolution streams shall allow video bit rates from 1 to 5 Mbps and the low resolution stream shall allow video bit rates from 64 kbps to 2 Mbps. The Contractor shall initially configure these formats for 2.5 Mbps and 384kbps, respectively.

The Contractor shall initially use UDP/IP for video transport and TCP/IP for camera control transport unless otherwise approved by the Department.

The camera shall support resolutions of 720p, CIF (352 (H) x 240 (V)), and D1 (720 (H) x 480 (V)) at a minimum.

The 10/100BaseTX port shall support half-duplex or full-duplex and provide auto negotiation, and shall be initially configured for full-duplex.

The camera unit shall be remotely manageable using standard network applications via web browser interface administration. Telnet or SNMP monitors shall also be provided.

C. CCTV Test Panel

Equip each CCTV equipment cabinet with CCTV unit test panel that allows for a test monitor or notebook computer to be plugged into the panel and video from the CCTV unit to be viewed. All CCTV control functionality available in the unit may be performed in the same fashion as if the user were located at the CCTV video head end in the TOC.

D. CCTV Composite Cable

The Contractor shall furnish and install all cables and connectors necessary for connecting the Camera to the Field Ethernet Switch in the cabinet. The Contractor shall install lead-in power and communication conductors between the CCTV and the cabinet.

Furnish cable for connection to CCTV unit that contains CCTV Ethernet and power lead-in conductor wires in a single cable jacket that is rated for outdoor use. Furnish cable that is rated to meet outdoor temperature, water blocking, ultraviolet and insulation characteristics. Furnish a shielded CAT6 twisted pair cable that prevents cross-talk and RFI/EFI between conductors. Furnish cable that uses standard connections on both ends that are compatible with the equipment to which it will be connected. Furnish power connections of the conductor size that operate with voltage drop and signal loss characteristics required for the equipment being connected.

E. CCTV Camera Attachment to Pole

At locations shown in the Plans where new CCTV cameras are to be installed on new or existing wood poles, furnish an attachment assembly for the CCTV camera unit. Use stainless steel banding approved by the Engineer. Submit shop drawings for review and approval by the Engineer prior to installation.

Furnish CCTV attachments that allow for the removal and replacement of the CCTV enclosure as well as providing a weatherproof, weather tight, seal that does not allow moisture to enter the enclosure.

Furnish a CCTV Camera Attachment Assembly that is able to withstand wind loading at the maximum wind speed and gust factor and can support a minimum camera unit dead load of 45 pounds. Base the design on the correct wind speed in accordance with the latest edition of *AASHTO Standard Specifications for Structural Supports for Highway Signs, Luminaries and Traffic Signals.*

F. Surge Suppression

Protect all equipment at the top of the pole grounded metal oxide varistors connecting each power conductor to ground.

Protect coaxial cable from each camera by a surge protector at each end of the cable.

G. Pole Mounted CCTV Cabinet

Furnish pole mounted 336S stretch cabinet as initially described in Section 21 of these Project Special Provisions. Furnish and install only those accessories related to PDA and grounding system. Do not furnish any other cabinet accessories listed in Section 21.

23.3. CONSTRUCTION METHODS

A. General

Mount CCTV camera units at a height of 35 feet above ground level at the pole.

Mount the CCTV camera units such that a minimum 5 feet of clearance is maintained between the camera and the top of the pole.

Mount CCTV cameras on the side of poles nearest intended field of view. Avoid occluding the view with the pole.

B. Electrical and Mechanical Requirements

Ground all equipment as called for in the Standard Specifications, these Special Provisions, and the Plans.

Install surge protectors on all ungrounded conductors entering the CCTV enclosure. House the protectors in a small, ventilated weatherproof cabinet attached near the CCTV attachment point in a manner approved by the Engineer.

C. Pole Mounted CCTV Equipment Cabinet

For each pole-mounted CCTV equipment cabinet installation, use stainless steel banding or other method approved by the Engineer to fasten cabinet to pole. Install pole-mounted CCTV equipment cabinets so that the height to the middle of the enclosure is 4 feet from ground level. No risers shall enter the top or sides of the equipment cabinet.

Install all conduits, condulets, and attachments to equipment cabinets in a manner that preserves the minimum bending radius of cables and creates water proof connections and seals.

23.4. MEASUREMENT AND PAYMENT

Digital CCTV Camera Assembly will be measured and paid for as the actual number of assemblies furnished, installed, integrated, and accepted.

The assembly includes the CCTV Camera unit, housing, pan and tilt unit, controller/receiver unit, CCTV Test Panel, and all associated cabling, configuration, integration and labor to furnish and install the assembly. Wood poles for mounting of CCTV assemblies shall be paid for separately. No separate measurement will be made for cabling, connectors, CCTV camera attachment assemblies, condulets, grounding equipment, CCTV camera enclosures, surge protectors, or any other equipment or labor required to install the CCTV assembly. All work to mount assembly on pole shall be incidental.

Pole Mounted CCTV Equipment Cabinet will be measured and paid as the actual number of CCTV equipment cabinets furnished, installed and accepted.

No payment will be made for cabling, connectors, cabinet attachment assemblies, riser assemblies, condulets, grounding equipment, surge protectors, or any other equipment or labor required to install the field equipment cabinet and integrate the cabinets with the CCTV equipment.

Payment will be made under:

Digital CCTV Camera Assembly .....Each
Pole Mounted CCTV Equipment Cabinet .....Each

24. SYSTEM SOFTWARE

24.1. DESCRIPTION

Furnish and install traffic control system software for the following applications

- Distributed Processing System Software
- CCTV Control Software
- System Support Software

Install the following software as furnished by the Engineer.

- Local Controller Software (latest IP version of NCDOT's state-licensed OASIS software package). The Engineer will furnish the latest version of the software at the time of burn-in. Request the software from the Engineer a minimum of five business days prior to burn-in.

The Contractor shall be responsible for the development of and integration of all system graphics (and associated system devices) described in the following specifications.

24.2. MATERIAL

A. General

The overall architecture of the system shall be a client server design based on hybrid centralized/distributed intersection control concepts.

Processing shall be distributed and the communications protocol of the state-licensed local controller software shall be used for all intersection controller interfaces. Client workstations shall access networked file servers that perform traffic management, system communications, database management, and system graphics.

The system shall be implemented using standard, commercially available computer hardware required in Section 25 of these Project Special Provisions. Windowing graphical user interfaces (GUI) using object-oriented design and geographically coded database components shall be an integral part of the system design. These elements shall form the basis of all user interactions with the system.

The software shall be portable, as a minimum, across multiple PC hardware platforms and shall be designed to integrate with off-the-shelf PC software. For example, the system shall provide the ability to exchange files with common Geographic Information Systems (GIS), databases, and common office productivity software products.

All software and firmware furnished under this project (both for individual field equipment locations and for central software) that maintain internal clocks and utilize those clocks for display of time, reporting of time back to system users, reporting of time on reports and event logs, and/or use of internal time clock to coordinate actions and activities with other software or devices shall be able to adjust to leap-year and current day light savings time dates automatically without user intervention or adjustment.

1. Local Area Network Requirements

A 10/100/1000 Base-T Ethernet, local area network (LAN) shall support the distributed client/server architecture. The requirements for the LAN are in Section 16 of these Project Special Provisions.

The software shall allow for a minimum of sixteen (16) simultaneous users (including remote users) of the traffic signal system applications software. No degradation in system performance shall occur when sixteen operators use the system simultaneously. Each user, subject to his or her security level, shall have full access for system control, database entry/examination, malfunction diagnosis, system operation evaluation and measures of effectiveness analysis. Access by any particular user to any particular command shall be allowed or disallowed based upon that user's assigned security level.

2. Software License

Provide a perpetual, irrevocable software license to the Department and the City of Salisbury that gives them the right to copy and use the distributed processing software furnished with this project at any facility within the signal system limits.

Furnish software modifications necessary for system operation as per this Project Special Provision to the agency at no additional cost during the warranty period.

Furnish software that may be used at TOC, or at any other offices in the State of North Carolina that the City and State, or their authorized agent, may establish for the purpose of traffic signal monitoring and control of the Salisbury Signal System.

For any software functionality that is specifically developed for this project, the software developer shall provide hardcopy and digital copies of the un-compiled source code of the software. This source code must be fully documented and commented, so that an experienced programmer/developer (3 plus years) in the language(s) that the software is written may interpret, modify, and debug the code. The required software compilers shall be specifically and clearly identified and include the operator system platform, the version number, release number and date, and brand.

For copyrighted commercial off-the-shelf (COTS) software, a copy of the source code (both hardcopy and un-compiled digital commented as described in the preceding paragraph) shall be held in an escrow account by an independent agent agreed to prior to final acceptance of the system by the Department. The version of the source code in the escrow account shall be updated as modifications, fixes, enhancements, and improvements are made to the software and implemented on the software products used by the Department. In the event the provider of COTS software product(s) defaults, discontinues support of the software product(s) furnished under this project, goes out of business, or otherwise is unavailable to support the software product(s), the software source code contained in the escrow account shall immediately become the property of the Department.

Provide any third party software licenses to the Department and the City of Salisbury for software that may be used. Example: report-configuring, diagnostic, or monitoring software.

3. Operating System

The operating system for all software provided under this project shall be the latest revision available as recommended by the supplier of the system software.

The network operating system (NOS) shall be compatible with the traffic signal system software.

The NOS and software operating system shall be compatible and work seamlessly with the traffic signal system software and all other software (video, , productivity, LAN, etc.).

B. Distributed Processing Signal System Software

1. General

The signal system software shall not be a prototype or software custom-developed for this project. The software shall have been successfully integrated, tested, and accepted in at least two cities of comparable size (a minimum of 100 intersections). This deployment shall be with 2070 controllers utilizing the local controller software to be deployed under this project.

The system software shall communicate directly with the local intersection 2070 controllers installed under this project. The use of remote communication units (RCUs) is not permitted. The signal system software shall interface with the latest IP version of NCDOT's state-licensed local controller software package. The system shall use a client-server design based on hybrid centralized/distributed intersection control.

The system shall be designed to operate 24 hours per day, unattended, with operator attention required only periodically. Operator intervention requirements shall be limited to defining system components, modifying system timing, responding to alarms or malfunction indicators, diagnosing component failures, and manually "fine-tuning" new timing plans.

The software shall provide central monitoring of up to 1000 intelligent controllers. The system design shall accommodate future expansion. The addition of new intersections and detectors, in the field, shall not require additional software or central hardware and shall require only modification of the control database. The software design shall facilitate the easy, future incorporation of additional control strategy, software logic, and additional system features.

All changes to the system, including adding new controllers, configuring communications, modifying maps and intersection displays, etc., shall be performed through the system graphical user interface or by updating files in the system software folders. The use of initialization files and external editors shall not be required.

A laptop utility program shall provide on-street accessibility to off-line controllers.

2. Start-Up and Shut-Down

The traffic control system shall provide for the initial start-up of the system by initializing all operational and failure arrays within the software. The initialization routines shall be used not only at the true initial start-up of the system, but whenever it is desired to reinitialize the system without prior status information.

The traffic control system shall accommodate a planned shutdown of the monitoring functions of the traffic control software.

3. Power Failure

Interface system software with the uninterruptible power supply. Upon detection of a loss of power, the system software shall notify the operator.

The traffic control program may suddenly stop execution for various hardware or software reasons. In such event, alarms shall alert the operator as to the problem and circuitry shall ensure against the transmission of erroneous data by the field communications subsystem.

In the event that the operator determines that the operation of the system is improper, he/she shall be able to immediately force all system intersections to an off-line, or a time-based coordination timing plan stored in the local controller (depending on the local day plan) from any system workstation.

4. Backup Intersection Operation

The system shall provide for backup intersection operation in case of failure of the distributed system file server, communications server, or the communication system. This backup shall be accomplished by means of time-based coordination (TBC) provided by the local controller software.

When operating by centrally controlled scheduled events, the local controllers shall automatically implement local TBC, according to the day plan programmed into the controller whenever communication to central is absent.

When operating by centrally controlled manual commands, the local controllers shall continue to run according to those commands regardless of the state of communications.

5. Clock Updates

Upon login, each workstation clock shall be automatically updated by the Microsoft Windows operating system to the current time of the distributed system server clock.

6. Remote Access

The system shall allow full access to the system for a multiple user by means of Ethernet access through a secured firewall, using means approved by the department. The remote user shall be allowed to perform any functions and available to any other user with the same level of security regardless to where the user is physically located.

7. Paging

The system shall be capable of automatically sending alphanumeric messages (SMS – text messaging) to cellular telephones and email addresses upon detecting problems with the system or from any device. Malfunctions notifications shall also appear as a pop-up alarm, or similar notification approved by the department, on each workstation logged into the system. An audible alert shall be associated with a pop-up alarm, and configurable by the user.

The visual pop-ups and audible alerts shall be configurable to stay up for a specified time period or to stay up indefinitely until closed by the user. Malfunction notifications shall consist of at least three (3), user configurable, priority levels, to include low priority, medium priority and high priority alerts. Acknowledgements of incoming malfunction alarms shall be required for all medium and high priority on-screen notifications. Low priority alarm notifications shall not require acknowledgements.

Malfunction alerts shall be sent via text (SMS) or email notifications and shall be configurable by TOD/DOW, allowing recipients to be selected based upon severity or priority of event and to issue text/email messages sent to multiple devices or addresses.

Notifications shall allow a confirmation to assure that the malfunction has been acknowledged. If no acknowledgement is received upon expiration of a user programmable time-out period, subsequent notifications shall be configurable to be sent to alternate devices.

The system shall log all malfunction notifications, retries, and acknowledgements with time and date stamps. The first acknowledgement shall be recorded; all others shall be ignored.

8. Field Communications

Within the Salisbury computerized signal system, traffic signal controllers will be integrated with field Ethernet switches that are arranged in a multi-drop communications channels capable of supporting a minimum twenty (20) traffic signal controllers on a dedicated communications channel. Each controller is connected to the system via a pair of optical fibers and field Ethernet switch. A channel consists of two fibers: one transmitting and the other receiving.

Each channel with its boundaries and the controllers and ITS devices contained within it are depicted on the cable schematic diagram shown in the Plans.

9. Database Preparation

Complete all data entry necessary to implement the operation of the system software.

The Engineer will furnish intersection timing information and coordination parameters (cycle, split, offset). Any custom intersection displays will also be provided by the Department or City. Otherwise, default intersection timing data and standard intersection maps will be utilized when configuring intersections onto the system. Program all system detectors shown in the plans. Coordinate with the City to provide setup, naming/labeling, logging and any features required for the operation of all system detectors.

TOD/DOW/DOY plans, alarms and other information for the operation of the signal system shall be entered by the contractor.

10. System Function Monitoring

Verification of on-street system operation shall be incorporated in the new signal system. Operation of all controller equipment shall be monitored, with current displays and malfunctions reported in near real-time. Continuous, polled communication shall occur from the local controller to the communication server.

11. Database Backup and Restoration

The system shall a simple means of copying the database files from the hard disk to a removable storage device. All files required to restore the system to operation without the need to manually re-enter data shall be included on removable storage device.

Files containing records of logged events and detector data shall be saved on hard disk. The system shall enable an operator to copy all logged events, within a user-specified date range, to the removable storage device. The system shall enable an operator to copy all selected detector data to the removable storage device.

The software shall provide simple, straightforward means for restoring system operation from the backup database files.

12. Graphical User Interface

An object-oriented, graphical user interface (GUI) shall be provided to control and access all systems displays, reports, and dialogue boxes. The GUI shall provide access to all signal system monitoring and control options from a single screen.

Graphical icons shall be used on the displays to represent system devices. The icons shall provide easy access to traffic control data (signal timing, geometric, etc.), real-time data (intersection, link status, etc.), the database, and graphical image files.

The GUI shall include an intersection/link base map with windowed table reports and management input windows. The GUI shall provide interactive mechanisms to assist in creating, editing, and modifying editable dynamic graphic screens that are linked to system dynamic elements. As a result, all operator actions shall be immediately visible as a change in the system graphic.

The workspace session window shall display a toolbar near one of the window borders. The toolbar shall contain buttons and other controls specific for actions relating to a selected window. Actions supported by and pertaining to an active window shall be invoked through the toolbar, action bars, menu selection, popup menu or controls internal to the window itself.

Menu and dialogue box options that are not appropriate in a particular context or not available to a given user shall be "grayed-out" and unavailable for selection.

Traffic engineering terminology shall be used throughout the programming displays. Display organization and data entry approach shall allow system operators to operate the distributed signal system software without using reference cards or manuals.

The user interface shall include an object library that contains dynamic icon objects for system control and monitoring devices. The basic system shall include, at a minimum, objects for traffic signals).

The library shall also include an interactive editor for placing these objects within dynamic graphic screens.

The system shall allow the user to link dynamic graphics objects directly to system database elements without low level code programming, use of initialization files, or program recompilation. The library shall also include dynamic objects allowing the user to define directional roadway links using a simple vector drawing facility. Proper representation of directional status attributes shall be available at all zoomed levels, on the system map.

All information shall be shown simultaneously and continuously displayed until canceled by the operator. Displays shall not affect system operation. All displays shall have a maximum refresh rate of one second.

System Graphics

These dynamic condition maps shall provide a simple mechanism for system navigation, presentation of status, and selections within the user interface.

Backgrounds for the system-wide graphic shall be capable of containing commercial vector images of geographically accurate maps or scanned images. These images shall be compatible with

common GIS software packages. These images shall be used as the display layers of real-time graphics displays.

Backgrounds for the control section and intersection displays shall be .bmp or .jpg formats. Resolution or file size shall not be limited.

Zooming, scrolling and automatic control layers of graphic presentations shall be included with the system.

All graphics for system maps, control section maps, and intersection displays shall be submitted to the Engineer for approval before being integrated with the software.

System Map

The GIS-based system-wide map or approved equivalent shall provide a dynamic display of the entire surveillance area and any layers the agency requires, including but not limited to interstate highways, major arterial roads, railroads, jurisdiction boundaries, and bodies of water. It shall be possible to "zoom in" and "drill down" to any specific area of the map using the pointing device to select one corner of an area to view, and then select the opposite corner of the area to view. (Zoom out capability shall also be provided). The window containing the system-wide map shall be capable of being dynamically sized by a workstation user.

It shall be possible to display intersection icons in different formats, using the menu bar. The system map shall provide a dynamic display of the signal system signalized intersections in the following two modes:

- Intersection phasing
- Intersection plan

The graphic shall also dynamically display the status of the controllers (e.g., coordination, emergency vehicle preemption, railroad preemption, transition, free operation, flashing, failure, intersection phase status). Intersection status and roadway links shall change color dynamically based on user definable color selection.

Intersection phase status (green, yellow and red) shall be displayed in real-time on the intersection phasing icon. The intersection control status shall be displayed as the background color on the intersection plan icon. Intersection plan information shall be displayed as a number on the intersection plan icon.

Link status shall be shown as different (user defined) colors for differing traffic flow conditions.

The system display shall be capable of being dynamically sized by a workstation user. Resizing the window shall not reduce the amount of data displayed on a workstation monitor and the same aspect ratio shall be monitored as before the resizing.

Control Section Map

Create default subsection maps/zones or areas to provide a display. The default displays will be called Control section maps, and shall provide a more detailed display of selected zones or areas of the system. A Control section shall be able to be called from the system map display via a double

mouse click or from a drop down menu. A minimum of fifteen (15) control section displays shall be capable of being simultaneously displayed while the system map is open and the maximum number intersection display windows are open. The control section map interface shall be an integrated portion of the distributed processing system software and shall not be a stand-alone package.

The control section map shall provide a dynamic display of the signal system, including landmarks, streets, signalized intersections, interstate highways (if applicable), railroads (if applicable), system detectors, system detector actuation. Labels for these items shall also be displayed. All labeling shall be approved by the Engineer. The graphic shall also dynamically display the status of the controllers in the sub-area (e.g., coordination, emergency vehicle preemption, railroad preemption transition, free operation, flashing, failed, intersection phase status). Volume and occupancy levels shall be displayed as color bars on the map. Intersection phase status (green, yellow, and red) shall be displayed in real-time using arrow icons. Link status shall be shown as green for free flow or near free flow conditions. Yellow shall be shown for moderate congestion or transition conditions. Red shall be shown for congested conditions, and flashing red shall be used to indicate severe congestion or major delays. The control section display shall be capable of being dynamically sized by a workstation user. Resizing the window shall not reduce the amount of data displayed on a workstation monitor, and the same aspect ratio shall be monitored as before the resizing. The control section map graphic shall include a user-definable control section map title. North shall either be at the top or right side of the monitor when displaying a control sub-area. Vertical and horizontal scroll bars may be provided if the size of the sub-area is such that it cannot be displayed on a monitor at a scale (as determined by the Engineer) that is adequate for viewing by the operator. The City will provide to the Contractor the final control sections boundaries for each control section display to be developed by the Contractor. There will be a maximum of 30 Control Section Map displays. Submit a sample of a Control Section display or map for review by the Engineer.

Intersection Display

The Contractor shall be responsible for the development of and integration of all system graphics (and associated system devices) described in the following specifications.

The intersection graphic shall display both static and dynamic information. The static information shall include the intersection name, geometrics of the intersection (including a graphic display of the number of lanes and their associated use), adjacent land use, the location of the controller, and a layout of the intersection with the intersections signal locations and number of heads. The dynamic information to be displayed shall include:

- All vehicle signal indications for each active phase, and up to sixteen (16) overlaps with red, yellow, and green indicators
- All pedestrian signal indications, for up to sixteen (16) active phases. WALK, flashing DONT WALK, and steady DONT WALK shall be shown
- Vehicle and pedestrian detector actuations for each active phase
- Cycle timer (central and local clocks)
- Timing plan in effect (with cycle length and offset)

Operational status of the intersection shall include the following, but not be limited to:

- Timing in effect (in coordination, TOD, TR, etc.)
- Status mode (transition, free operation, flash, pre-emption (railroad or emergency vehicle)
- Control mode (manual control, local control, failed, etc.)

The intersection display shall accommodate all phasing of the state-licensed local controller software.

The intersection display shall be capable of being dynamically sized by a workstation user. Resizing the window shall not reduce the amount of data displayed on a workstation monitor.

13. Intersection Monitoring

The status of each controller shall be monitored and any detected error condition shall be logged. Error conditions shall be stored in a form that specifies the type, date, and time of the error. Error processing shall be performed during both coordinated and free operations.

The software shall monitor for the following conditions:

Communications Status

The system software shall report the present status of the communication system at the controller. Changes in status of the communication system shall be recorded in the system log.

Communication Error

If communication between the communications server and local intersection is lost for a number of consecutive seconds, a failure shall be identified and an error message shall be logged and the intersection shall be dropped from system monitoring. Upon identification of a communications error, the software shall continuously attempt to re-establish communications to the intersection and regain monitoring of the intersection.

Flash Conditions

The system shall have the following flash mode capabilities:

- **Central Flash**: Individual intersections and control sections shall be capable of being placed on flash by operator command or schedule entry.
- **Cabinet Flash**: Cabinet flash mode shall be indicated when a controller enters flash via manual selection at the cabinet.
- **Conflict Flash**: Conflict flash shall result from a tripped conflict monitor at the local intersection. Conflict flash shall be logged as a failure by the software system.

The type of flash mode (central, cabinet, or conflict), the intersection name, date and time shall be logged for each entry or exit from flash.

Local Preemption

The system shall monitor and recognize the occurrence of preemption at each local intersection. Accordingly, a preempted intersection shall not be erroneously diagnosed as having experienced a coordination failure. System log messages shall be recorded to note the beginning and ending times of local preemption and the type of preemption (e.g. emergency vehicle, railroad, etc.).

Implemented Local Manual Control

Local manual control shall be initiated and controlled by hardware at the intersection. The software shall identity any intersection that is in local manual control by means of a status message. Accordingly, an intersection being operated under manual control shall not be erroneously diagnosed as having experienced a coordination failure. When the local manual control status has been removed, the local software shall initiate the transition back to normal operation and the system log messages shall be recorded at the start and end of local manual control condition.

Local and System Detectors

The system shall allow users to set up and gather detector data from local and system detectors for Traffic Responsive Operation or other analytical purposes.

The software shall be able to recognize and report failed detectors (e.g. constant call, no calls, etc.). A detector shall be automatically suspended from use if it is failed. Parameters for determining under counting, over counting, maximum presence shall be adjustable by the user. Detectors classified as marginal shall remain in use, but shall be identified. A change in classification to either failed or marginal and the reason for the change shall be reported to the operator and automatically entered in the system log. A reclassification to acceptable shall also be logged. System detector activity reported from any local controller type shall be monitor for under counting, over counting, and maximum presence.

Regardless of the classification status of any detector, detector status reporting shall continue unless inhibited by an operator command. A detector that has been suspended from use due to a failure shall remain suspended until its operation has been reclassified as either acceptable or marginal, or until the operator enters a command that releases it from suspension.

Detector data smoothing shall be provided to prevent short-term fluctuations from incorrectly influencing traffic-responsive control algorithms. The system software shall automatically use historical data for the traffic-responsive control algorithms when detectors have been classified as failed.

Timing Plans

An intersection timing plan shall be defined as a unique combination of cycle length, split and offset at an intersection. The software shall monitor a minimum of sixty-four (64) timing plans for controllers. In addition, the software shall enable selection of both flashing and free operation of any intersection.

Cycle lengths, offsets, and splits shall be reported in one-second increments, or as a percentage of the cycle length if selected by the user.

Whenever a new timing plan is implemented, each controller shall achieve the new offset by implementing a transition with respect to the new cycle clock reference. For each intersection on the system, the software shall recognize and display a message that local transition is in effect.

Phase Movements

The system shall monitor each independent movement of up to sixteen (16) phases, for the quad-ring controller. This monitoring shall include force off points, and permissive periods for each phase.

Clock Updates

Following each update of the clock on the communications server, the system shall update the clocks in each local controller and the distributed system server.

The system shall be able to receive clock updates from an external time synchronization source. Clock updates shall be demonstrated and approved by the Engineer. The system shall broadcast, unicast, or use a combination of both to send time updates to controllers on a user-configurable schedule. The user shall be able to configure how often the broadcast is performed, the hour at which the broadcast begins, the number of times the broadcast is repeated, and the time period between repeated broadcasts.

The system shall provide a means of monitoring the time drift of clocks on controllers, provided the controller supports this functionality.

For each controller that supports this functionality, the system shall allow checking controller clock times on a user-specified interval.

The system shall display the time the controller's clock was last checked and the difference between that controller clock and the system time reference.

The system shall also provide the ability to automatically synchronize a controller's clock if the time drift exceeds a user-specified threshold.

The system shall provide a means to synchronize controller clocks with the system time reference upon user command.

This functionality shall be provided in addition to the scheduled time broadcasts previously specified.

14. Intersection Control

The software shall allow any user to control and implement changes to any intersection controller via the GUI, either through scheduled events, manually controlled events, or time-of-day plans programmed in the local controller. All parameters and events that can be programmed from the controller front panel shall be available at central for remote implementation. Any aspect of the controller timing shall be assessable from central, and shall allow editing of all timings. Full upload and download of timings to controllers shall also be allowed.

Central Scheduler

It shall not be necessary to use a special function to implement any of the local controller's basic functions. These functions shall be inherited from the timing plans associated with each type of controller.

The system shall include a centrally based event scheduler that issues scheduled commands to controllers. The set of schedulable events shall include:

- Coordination Plans
- Software Flash
- Free Operation
- Local TOD
- Traffic Responsive Operation
- Special Functions (supported by local controller type)

The event scheduler shall support the following features:

- **Day Plans**: The scheduler shall support scheduling of up to 100 unique day plans. Each day plan shall support up to 100 individually schedulable events. The individual events shall be implemented for a specific controller or a control section. The time resolution of each event shall be one minute.
- **Week Plans**: The scheduler shall support up to 52 week plans. Each week plan shall support individual day plan selection for each day of the week.
- **Annual Calendar**: An annual calendar shall support both week plan and individual day plan selection. The calendar shall automatically roll permanently scheduled events from one year to the next.
- **Individual Event Scheduler**: The scheduler shall support up to 500 Individual events to be scheduled at a higher priority than the Calendar events.
- **Manual Command/Temporary Event Scheduler**: The scheduler shall support implementation of temporary events. These events shall be programmed to begin immediately or within a scheduled timeframe. These events shall be automatically deleted from the system upon completion.

Time-of-Day Operating Mode

The Time-of-Day/Day-of-Week/Day-of-Year (TOD/DOW/DOY) mode of operation shall allow the advance scheduling of the signal plan and timing plan to be implemented in each section. TOD/DOW/DOY scheduling shall be performed based on the schedule data stored locally at the controller and updated by upload/download operations.

Coordination Plan and Scheduler Resolution

Events in the scheduler (both turn-on and turn-off) shall be adjustable in minimum increments of one minute.

Section (Zone) Control

The software shall achieve coordinated operation across the boundaries of all control sections operating on the same cycle length or on multiples of the same cycle length by ensuring that all such control sections are synchronized to a common reference.

Timing plan selection shall not be limited to entire sections. Timing plans, at the discretion of the system operator, shall be implemented for a single intersection, section of intersections, or system-wide. The timing plan shall be selectable by the operator (Manual mode), by a time clock scheduler (Time-of-Day/Day-of-Week mode), or by the local controller itself.

Traffic-Responsive Operation

In traffic-responsive operation (TRO), the system software implement a V+kO, threshold matching algorithm, and shall select the timing plan based upon system detector information and coordination threshold parameters that have been defined by the user.

The system database shall identify the system detectors that are assigned to each control section for traffic-responsive operation. System detectors may be assigned to more than one control section.

In traffic-responsive operation, the software shall use weighted volume and occupancy from the active system detectors. When the system is running TRO, it shall monitor the control section for failed detectors. Upon detection of failed detectors, TRO will continue to function until the percentage of failed detectors exceeds an operator-specified threshold. The section shall then automatically switch to the TOD/DOW/DOY timing plan. This plan shall remain in effect until the percentage of failed detectors is below a different operator specified threshold. At this time traffic-responsive operation shall automatically resume.

Minimum plan execution time and threshold hysteresis shall be established by the operator to prevent excessive switching between timing plans. The minimum time between timing plan changes for any given section shall be measured in one-minute increments; this value shall be separately defined for each section.

The user shall have the ability to run Traffic Responsive as a background process wherein a Traffic Responsive plan is selected, but not implemented. This shall allow the user to verify Traffic Responsive operation in an off-line mode.

15. Database Management

The system shall be built around a multi-user commercial off-the-shelf (COTS) database software product. The database shall be used to store, retrieve, and maintain system data and parameter files and shall be available for common computer hardware platforms.

The software shall provide user-friendly database facilities that allow changes to be put into effect while the system remains fully operational. The system shall provide the following database management features.

The database management software shall allow programming of the intersection controller databases. Each intersection controller shall have separate database programming pages. These pages shall contain all the programming options unique to each intersection.

All programming entries shall primarily consist of numerical values, "Yes" or "No" entries, and bit data. During configuration data entry, the new data shall overwrite the old data. If the data is in error, changes shall not be permitted and the user shall be alerted by either an error message on the display or a warning tone.

All data items entered from any workstation shall be tested for data type (numeric or text) and allowed range. All string data items shall be tested to ensure that they do not exceed the allowed length. The program shall not terminate because any data item is incorrectly entered. When errors or potential errors are detected, the program shall either display a specific diagnostic message on the screen or shall give an audible alarm and shall place the cursor in the proper field. In any case, the system shall allow the operator to re-enter the item. Prior to or simultaneously with reentry, the diagnostic message, if any, shall be erased.

Whenever a logical grouping of data (such as a full screen or the complete database file) has been entered or edited satisfactorily, that data shall be written to the proper record. This may take place upon return to the main menu or, alternatively, it may take place as the entry or editing of each distinct file is ended.

The screen organization and data entry/edit method shall enable the operator to use all functions without the need to use reference manuals or cards. The software shall minimize the use of mnemonics to interface with the user on the screen, in printed reports, and in the system's documentation or worksheets. Only mnemonics consisting of Engineer approved traffic engineering abbreviations and other straightforward abbreviations shall be acceptable.

All field descriptions and inputs shall be simple and all text shall be in simple English and common traffic engineering terminology. It shall not be necessary to perform any decoding to read the information. All necessary field descriptions shall be specifically and discretely provided on the same display screen as they are needed.

Copy Facility

It shall be possible to copy an entire controller database (except for intersection name and identification number) from one controller database to another controller database.

It shall be possible to copy from within the database software all logical segments of the controller database to other like segments of the same controller database using menu commands (IE Timing Table page 1 →Timing Table page 2).

It shall be possible to copy from within the database software all logical segments of the controller database to other like segments of another controller database using menu commands (IE Timing Table page 1 [intersection 100] → Timing Table page 2 [intersection 101]).

It shall be possible to copy from one cell within a database table to another like cell in the same table (IE min green phase 1 to min green phase 2).

Upload/Download of Database

Any workstation shall provide for uploading (copying) the database, and logical segments thereof, from any local controller. The software shall similarly provide for downloading (copying) the database, and logical segments thereof, to a 2070 controller from any workstation.

Uploading a controller database from the field to central (or downloading from central to the field) from one type of controller to another type shall not be permitted.

The upload/download feature shall use block transfer techniques with a cyclic redundancy check (CRC) to ensure data integrity. Non-verified data shall cause termination of the upload or download operation, with no transfer of the corrupted block occurring. A status message shall be displayed when improper termination of the upload or download operation occurs.

Database Comparison

Following an upload, the system shall allow the operator to compare the database of any intersection controller to the database stored for that intersection on the file server. This comparison shall identify any differences between the uploaded and stored file data. The system operator shall be able to correct, use, or substitute data values and proceed with further comparison.

16. Reports

The system shall generate a number of pre-configured reports. The database software shall permit the operator to retrieve data and produce pre-configured reports. System report information shall be able to be exported to a XML file with report data, CSV (comma delimited), PDF file, TIFF file or a DOC file. All reports should show asset ID number, Main Street, Cross Street, asset type and prevalent information to the asset.

The formats of all reports shall be submitted to the Engineer for approval.

The list of pre-configured reports shall include, but not be limited to, the following:

- System Errors/Alerts
- Communications Status Online/Offline
- System and Local Detector VOS Data
- Device Communications Configuration
- Device Configuration
- Events Log
- Control Section/Links Data
- Scheduler
- Signal Changes
- Signal Detector Events
- Split Monitor

- System Activity
- System Events
- Time Drift
- Upload and Compare
- User Login
- Detector VOS
- Daily
- Hourly
- Multi-date / Hourly
- Multi-date / Daily

Use of 3rd party software for the development of custom reports shall be provided by the contractor. The software shall interface with the signal system software and its data base to allow the user to create custom reports. The user shall be able to define the format of those reports. The system shall also provide a means by which user-specific reports can be created and added to the Reports menu item without the requirement of additional software or custom development work by the software provider.

Training shall be provided on the editing, creation, exporting and general use of pre-configured and custom reports.

17. Security

In addition to the network security features provided by the Operating System, the software shall provide customizable levels of access security. Each user must enter a login name a password before gaining access to the software.

The system shall accept any number of users to be configured onto the database. The system shall have 3 default levels of security, as follows:

- Admin User
- Read Write
- Read Only

The top level (Admin User) shall provide for total access (i.e. permit the operator to view and change all information in the system). Only users with this authorization shall be permitted to view or change access security codes, add new users and delete existing users.

A bottom level (Read Only) shall permit viewing of all information (except access security codes) yet not permit the operator to make any changes to the database.

The system shall also provide the ability to customize each user's privileges with respect to system functionality. Specific privileges shall be configurable for each user, with respect to each of the following System Permissions:

- User Setup (Admin User Only)
- Asset Group
- Location
- System Preferences
- Archive Logs
- Export Logs
- Restore Logs
- Purge Logs

Specific privileges shall be configurable for each user, with respect to each of the following Traffic Permissions:

- Communications Server Setup
- Detectors
- Sections
- ICM Port Configuration
- Scheduler
- Traffic Responsive
- Time Space Diagram
- AEM
- W4 Special Functions
- Traffic Preferences

Specific privileges shall be configurable for each user, with respect to each of the following Alarm Assignments:

- Central Communications Failure
- Field Communications Failure
- Technician Flash
- Monitor / Conflict Flash

- Controller Error
- Stop Time
- Detector Failure
- Police Switch
- Door Open
- Local Clock Failure
- Special Function 1
- Special Function 2
- Special Function 3
- Special Function 4

Each user shall have separate privileges to each asset group (a group of intersections defined within the system, which may cross jurisdictional boundaries, allowing multiple agencies to use a single system). Specific privileges shall be configurable for each user, with respect to each of the following Asset Group functions:

- Properties
- Delete
- Graphics Editor
- Timing Tables
- Upload
- Download
- Manual Commands
- Real Time Clock

18. Help

The signal system software shall have comprehensive, online help screens. The help screens shall be context sensitive, providing information specific to the highlighted fields or windows displayed.

C. CCTV System Software

The Contractor shall load CCTV system software on the digital video server for a user to distribute video streams among different monitor outputs and control the PTZ operations of the CCTV cameras in the field. The system software shall provide for the management of IP based video networks and be fully compatible with the digital video system provided under this project. The system software shall support TCP/IP and SNMP. The system software will have the capability

to access and control (pan/tilt/zoom) the video images. The system software will have access to the video network and have the ability to select CCTV images to be brought to any operator workstation running the CCTV software client as well as be directed to the display wall monitor or overhead projector. The system software will have full control over the selection of video inputs and outputs through the use of a single Graphical User Interface (GUI). Table-based and map-based video selection shall be provided by the GUI.

This CCTV system software will have the following basic functions:

- Provide standard windows based user interfaces and will run on the servers and workstations being provided under this project.
- The software will operate in Client/Server architecture and communicate with the video management server via IP.
- Utilize GUI for the purpose of directing CCTV and/or RGBHV images to display wall monitors seamlessly via a simple mouse click.
- Utilize GUI for Pan/Tilt/Zoom (PTZ) of video system CCTV cameras.
- Provide menu tree structure for selection of devices and provide simple-to-use Telnet hook commands for incorporation into map based GUI.
- Provide the capability to receive, view, and distribute analog NTSC video, standard formatted digital video (MPEG- 4) or digital RGBHV video images simultaneously in one application utilizing the same GUI window.
- Allow the user to select any video signal and view it on any computer desktop with the software client and tied to the LAN with a connection containing a suitable bandwidth.
- The software shall allow the computer Operator to view the selected video image in a separate window on the computer desktop.
- The software shall launch a window for the viewing of video images on the computer desktop.
- Images selected will automatically switch views within the viewing window once a connection to the video source has been made.
- The software shall support the creation of CCTV tours. A minimum of 25 tours shall be supported with each tour consisting of a minimum of 20 individual steps and/or commands. These shall include individual CCTV assignment of specific devices, movement to preset position and zooming of individual CCTV to preset position.

The client software interface will allow the Operator to execute the following commands:

- Select CCTV cameras from the video network to be displayed on the Operator's computer desktop.
- Command and control of CCTV cameras such as pan, tilt and zoom (PTZ), iris controls and presets where available.

- Store and recall CCTV camera presets, where available.
- Select video images (either VGA, RGBHV or NTSC) brought to the Operator's computer to be redirected for display on the LCD monitor or video projector.
- Setup Quad displays for viewing of four (4) individual video signals to be displayed in one full screen view.
- Allow the selection of video feeds for viewing through the use of a programmable menu tree structure.
- Contain a map based GUI for the selection of video signals. The GUI shall provide a graphic of the overall project area with icons representing camera locations. This graphic shall be identical to the map used for the signal system software. Selecting an icon will provide the user with camera control, unless the camera is in use by another user. If the selected camera is in use by another user, a message identifying the current user shall be displayed.
- The software shall allow each client interface with the ability to simultaneously connect to and control up to four (4) separate video sessions in one Client GUI.

The client and server software, as an integrated system, shall have the intelligence necessary to handle the contention mentioned above and it shall have a facility for the display of which video streams are linked to which network devices. This may be a tabular text or graphic representation and will also be a function of the administrative software.

- The system will direct selected video images to appear in a window, one image at a time, on the Operator's computer desktop and will allow the Operator to redirect the images to selectable endpoints such as the monitors or projector.
- Through the use of the client software, the Operator will have the ability to view live, streaming MPEG-4 video on the Operator's workstation and shall have the capability to distribute selected video streams to the dedicated video processor units for viewing on the monitors or projector.
- The network server and administration software must have the capability to fully manage and distribute the MPEG-4 multicast streams within the video network.
- The video control software must allow for grouping of video network resources to specific video network users or devices.
- The video control software shall have an unlimited amount of user priority levels available, enabling the allocation of specific video resources to be available to specific users.
    - The priority level scheme shall allow for a user with a higher priority level to automatically take control of video resources when logging into the video control software.
    - The priority level scheme shall allow for the provisioning of a single user login with unlimited access to all video resources.

- Priority level settings will be assigned to each user of the video control software.
- Upon login to the video network via username and password, the system will automatically recognize the user and allocate the available video resources allowed of that user's priority level setting.

- The video management server shall have a command pathway to the CCTV cameras and shall have serial (RS-232/422/485) connectivity to the CCTV camera through the data channel provided in the encoders.
- The video management server shall use a Lightweight Directory Access Protocol (LDAP) database for storage of all system devices and users.
- The video management server shall communicate with the Operator's workstation and the dedicated video processor units via Internet Protocol (IP).
- The video management server shall be fully manageable remotely via IP using the administrative software. The administrative software shall allow the Operator to have the capability to execute the following commands both locally and remotely:
  - Connect and disconnect calls between devices
  - Configure user profiles
  - Configuration of the video network and video network devices
  - Manage system security
- The furnished software shall be capable of managing a minimum of 50 unique digital video input streams, and 50 output devices, and 5 controller access points.

The CCTV system software shall provide integration with NCDOT's regional video sharing and distribution system that is maintained at the TRTMC facility. Allow for:

- Users on the City of Salisbury video system to view and control CCTV units that terminate at the TRTMC through a standard internet connection between the LANs at the two centers.
- Users on the NCDOT regional video system at the TRTMC shall be able to access and control CCTV units that terminate at the City of Salisbury TOC through a standard internet connection between the LANs at the two centers. This shall be accomplished through modification of the existing Protronix Video Pro Enterprise (VPE) software to permit the control of City of Salisbury CCTV units via the VPE GUI and the transmission of CCTV video over the center to center internet connection.

D. System Support Software

1. Signal Timing Software

Furnish traffic signal timing optimization and simulation software of the latest version that is compatible with the computer operating system provided on the computer workstations furnished under this project.

Furnish time-space diagram generation software of the latest version that is compatible with the computer operating system provided on the computer workstations furnished under this project.

Furnish two (2) handheld GPS Receivers with Cigarette Lighter Adapters for each receiver. The GPS receivers shall be fully compatible with the signal timing software provided and shall be considered necessary accessories and incidental to furnishing the time-space diagram generation software.

Include a complete user's manual and original installation disks or CD-ROMs for each software package. Provide full technical and maintenance support for all software.

2. Productivity Software

Furnish a network version of the latest release of office productivity suite, including software packages for spreadsheets, databases, documents, and presentations. A license shall be provided for each workstation and notebook furnished with the project. Furnish and install a copy of the latest release of the productivity software on each workstation and notebook computer furnished.

3. Utility Software

Furnish utility software for uploading and downloading timing plans locally at the signal cabinet. Furnish software that is compatible with local controller software and signal system central software. Furnish software with printing functionality.

24.3. CONSTRUCTION METHODS

A. General

Install and fully integrate distributed processing signal system software on Distributed Processing Signal System server called for in Section 25 of these Project Special Provisions. Install and fully integrate distributed processing signal system software on each workstation and notebook computer in the Salisbury signal system.

Install and fully integrate distributed processing signal system software on Distributed Processing Signal System Communications server called for in Section 25 of these Project Special Provisions as required.

Install and fully integrate CCTV central software on CCTV server called for in Section 25 of these Project Special Provisions as required.

Install all software furnished for the system in accordance with the procedures recommended by the software supplier.

Install a copy of the distributed processing traffic signal system software and all communications software necessary to achieve remote operations on the notebook computers.

Register all software products furnished with this project with the software supplier. The City of Salisbury and the NCDOT shall be identified as the registered owner of all software.

1. Operating System

Install and integrate the operating system and all necessary utilities.

B. Distributed Processing Signal System Software

Install and integrate the distributed processing traffic control applications software and all other software with the communications system and local controllers to provide a traffic signal system that provides the functionality required by these Project Special Provisions. A server based installation program shall be provided for installing the software on the file server. Provide a separate installation program for installing the client software on workstations. Install and fully integrate client software on all workstations and notebook computers provided under this project. Install client software on a Department-furnished workstation at the NCDOT Division 9 Traffic Operations Office as directed by the Engineer and fully integrate with the Department-furnished internet connection to communicate with the City signal system LAN.

Load all parameters necessary to implement coordinated signal operations. The Engineer will furnish the timing parameters in standard traffic engineering format (cycle, split, and offset) prior to the initiation of the 60-day observation period. Make any modifications to the cycle, split, and offset information furnished by the Engineer that are necessary to implement the timing plans into the system database. The test period may not begin until the timing parameters have been loaded. The Engineer may, at his/her option, observe the loading of the timing plans.

As directed by the Engineer, make modifications to the coordinated signal timing parameters (cycle, split and offset) prior to system acceptance to improve system coordination and efficiency. The Engineer will furnish the parameters to be modified by the Contractor. Make these modifications at no additional cost. No timing plan changes will be required after the successful completion of the system operational test (as approved by the Engineer).

Prepare comprehensive, detailed graphic displays for the system display, for all control section displays, and for all intersection displays. Contractor shall install all displays and fully integrate with system software. **Submit all graphics to the Engineer for approval prior to the System Operational Test and prior to integration in the software.**

Program all existing system detectors being reused in the signal system software. Install all associated graphics related to system detectors. Integrate system detector locations (based on the actual installation in the field) on all associated system graphics.

Submit specific landmarks and features to be displayed in the section and intersection displays to the Engineer for approval. Develop each screen upon approval of the areas to be displayed by each screen and make revisions as required from review.

Provide training to City and Department personnel relative to the creation and editing of the sub-area and intersection displays as required in these Project Special Provisions.

C. Local Controller Software

Install NCDOT-furnished local controller software on all new controllers. Use the latest version available at the time of installation as directed by the Engineer. Request local controller software from Engineer a minimum of one (1) week prior to use of software during burn-in period.

At locations where 2070L controllers are existing, and will not be replaced under this project, upgrade the local controller software to the current version of the NCDOT-approved software being installed in new controllers under this project. All controllers in the final Signal System shall have identical local software.

D. CCTV System Software

Install and integrate the CCTV system software with the field hardware. Install server version of the CCTV system software onto CCTV server. Install CCTV client software onto workstations and notebook computers at the TOC. Install CCTV client software onto all video monitor processor units provided under this project. Fully integrate all new CCTV cameras that are shown in the Plans.

Integrate the CCTV system with the City-provided standard internet connection to establish a connection with the regional video sharing system at the TRTMC. Perform all required configuration of the software, firewall, user privileges, and internet connection to establish the connection.

E. System Support Software

Install the signal timing software, productivity software, and utility software on all workstations and notebook computers provided with the project.

24.4. DOCUMENTATION

Provide and submit to the Engineer for written approval, full and complete documentation for all of the Distributed Signal System Software that has been furnished and installed as part of this project.

New flow charts and descriptive graphics shall be prepared and furnished as necessary, indicating connection to and relationship to existing program modification, additions and changes to the base software and their programs or routines.

Prepare and supply complete and fully debugged listings of all source coding provided with and used in the development of this system. Three (3) copies of the source code shall be provided on CD-ROM.

Supply three (3) copies of the distributed processing traffic signal system software documentation to the Engineer forty days (40) before the initial applications software test. From the date of computer delivery until acceptance of the project, update the Engineer's software documentation within two (2) weeks of performing any software changes. If the software documentation does not reflect the current software operation, the Engineer may stop all work on the project until the software documentation is updated. Maintain one (1) debugged and current backup version of the software on disk on-site at all times, once the computer has been delivered. Failure to maintain this documentation shall be grounds for the Engineer to halt the project until it is provided.

Supply four (4) additional current traffic control applications software documentation manuals, four (4) copies of distributed signal system software on CD-ROM, and two (2) copies of program listings to the Engineer prior to acceptance of the project. Also demonstrate to the Engineer that the backup version of the program on disk is debugged and current. Provide this backup version to the Engineer after acceptance of the project.

These manuals shall consist of two (2) volumes:

- Procedures for equipment setup, program loading, operating procedures, operational options, program monitoring, recovery procedures, and error message definition and corrections.

- Procedures for preparing, updating, and troubleshooting the database and pattern histories.

The operation of the TOC LAN, file servers, microcomputer workstation, and notebook computers shall be described in detail with respect to display of program information and parameters, changing of input parameters, and operation of special keys and other equipment.

Sample output formats shall be provided. They shall be reproductions of laser printer, plotter, and workstation display outputs. The computer information required to provide such a display shall be illustrated with the appropriate output format.

A complete list of error messages associated with the software operation shall be provided for both the system operation and the database and pattern history. Each error message that could appear during system operation shall be defined as to the actual meaning, cause, and corrective action to be taken. This information shall be in addition to the basic troubleshooting and malfunction information that shall be provided.

This System User's Manual shall be continually updated on a monthly basis to reflect the current applications software. Failure to perform this task shall allow the Engineer to halt work on the project until this task is corrected and demonstrated to the satisfaction of the Engineer.

Submit to the Engineer five (5) final copies of the System User's Manuals immediately prior to the acceptance of the project. These manuals shall be updated to reflect the current system operation and the Engineer's comments. The Engineer shall approve in writing these manuals before final acceptance of the project.

24.5. MEASUREMENT AND PAYMENT

Signal System Software will be paid at the contract lump sum price. This shall include the furnishing, installation, testing, and all materials, 3rd party software for reporting, equipment, labor, tools, storage, shipping, and incidentals necessary to install the software, complete system integration, and provide a complete operating system. Partial payment for this item will be made as follows: 50% of the lump sum price upon delivery and installation of the software and 50% of the lump sum price upon successful completion of the Observation Period. No payment will be made for providing software license and source code as required in these Project Special Provisions.

CCTV System Software will be paid at the contract lump sum price. This shall include the furnishing, installation, testing, and all materials, 3rd party software for reporting, equipment, labor, tools, storage, shipping, and incidentals necessary to install the software, complete system integration, and provide a complete operating system. Partial payment for this item will be made as follows: 50% of the lump sum price upon delivery and installation of the software and 50% of the lump sum price upon successful completion of the Observation Period. No payment will be made for providing software license and source code as required in these Project Special Provisions.

System Support Software will be paid at the contract lump sum price. This shall include the furnishing, installation, and all materials, equipment, labor, tools, storage, shipping, and incidentals necessary to install and configure the software and provide a complete operating system. Payment for this item will be made as follows: 100% of the lump sum price upon delivery, installation and testing of the software into the appropriate hardware. GPS receivers will not be paid for separately

but will be considered incidental. No payment will be made for providing software license and source code as required in these Project Special Provisions.

All other software and hardware otherwise required to accomplish the functionality required by the Project Special Provisions will not be paid for separately but will be considered incidental. No payment will be made for providing software license and source code as required in these Project Special Provisions.

No measurement will be made for the installation of the NCDOT-provided local controller software on existing signals that will not be replaced under this project, as this will be considered incidental to the Signal System Software and required to have a fully functioning system.

Testing will not be paid for separately but will be considered incidental to equipment installation.

Payment will be made under:

Signal System Software ..... Lump Sum
CCTV System Software ..... Lump Sum
System Support Software ..... Lump Sum

25. COMPUTER HARDWARE

25.1. DESCRIPTION

Furnish and install server computers, workstation computers, and notebook computers at the TOC and Customer Service Center with all software and hardware to provide fully operational computing platforms and systems to accomplish the operational requirements of the computerized signal system.

Install and integrate all computer hardware as shown in the Block Diagram contained in the Plans.

25.2. MATERIAL

A. General

Furnish hardware that operates at 115 VAC ± 10 percent at 60 Hz. Furnish hardware that operates in a +40 to +122 degree Fahrenheit environment at 20 to 80 percent relative humidity.

All workstations, laptop computers, and servers shall be from the same manufacturer. All servers provided shall meet the requirements of the Signal System Server unless otherwise defined. Servers and workstations that use proprietary power supplies will not be accepted.

For installations routing cables inside buildings, utilize existing cable raceways, electrical boxes, and metallic conduit where feasible.

B. Surge Suppression Strips

All computer hardware and peripherals not connected to an Uninterruptible Power Supply (UPS) shall be connected to a surge suppression power strip. Provide surge suppression power strips equipped with an on-off switch, an indicator lamp, isolating filter banks, and a minimum of six (6) 120 VAC, 60 Hz outlets. At a minimum, the filter banks shall attenuate high frequency noise

C. Applications Servers

Furnish all software licenses, diskettes, compact discs, manuals, and documentation for all software installed on computers furnished under this project.

1. Distributed Processing Signal System Server

Furnish Distributed Processing Signal System server (herein referred to as the "Signal System Server") to host the signal system central software on a client/server environment over the Salisbury Signal System LAN.

Features

The Signal System Server shall feature a modular, upgradeable architecture with Intel Xeon Quad Core or greater processors. Furnish server with a minimum of two processors. The server shall have the following minimum features:

- A minimum clock running speed of 2.33 GHz (both processors)
- 400 MHz front end bus.

- 512KB of integrated L2 ECC cache.
- 4 Gig of error checking and correcting (ECC) RAM.
- 4 PCI expansion slots.
- 24X speed CD ROM drive.
- Hard disk drive storage capacity to accommodate all LAN software, office productivity software, Distributed System software and databases, ten days of traffic monitoring data at the ultimate Distributed System size of 512 intersections and 500 system detectors, and 36GB of unused capacity (minimum of three 300GB drives).
- A redundant array of inexpensive disks (RAID) with the chassis, hardware, and interfaces necessary to implement Level 5 RAID storage over three disks.
- The ability to "hot-swap" any single hard disk drive unit without interruption of the server or the LAN.
- RAID storage capacity expandable to 2 TB.
- Ultra-wide SCSI controllers, with a minimum of 160 Mb/s per channel of data through put as needed to accommodate the RAID disk drive units.
- Ultra-narrow SCSI controllers as needed to accommodate SCSI peripheral devices.
- Two (2) 1000 Base-T network interface cards
- A minimum of two (2) Universal Serial Bus (USB) ports (2.0).
- A minimum of one (1) RS-232 serial port, or provided adaptor that replicates an RS-232 serial connection using one of the other data ports.
- Rack mountable in standard EIA 19" equipment rack

Operating System

The operating system for the Signal System Server shall be Microsoft Windows Server 2008. The release used shall be the latest revision available as recommended by the supplier of the system software.

Additional Software

The Signal System Server shall be furnished with all necessary software required to operate the signal system properly, which includes Microsoft® SQL Server 2008 or other version compatible with the signal system software and approved by the Engineer, and all applicable licenses.

2. Distributed Processing Signal System Communications Server

Furnish a Distributed Processing Signal System Communications Server (herein referred to as the "Communications Server"). Furnish Communications Server that meets the requirements of the Signal System Server and is equipped with all hardware and software required for the Distributed

System Software to meet all of the data communications requirements discussed in Section 24 of these Project Special Provisions, including once-per-second polling of all traffic signal controllers.

3. CCTV Video Server

Furnish a CCTV Video Server (herein referred to as the "Video Server"). Furnish Video Server that meets the requirements of the Signal System Server and is equipped with all hardware and software required for the CCTV System Software to meet all of the requirements discussed in Section 24 of these Project Special Provisions, including processing video from and control of CCTV cameras in the field.

4. Remote Access Server

Furnish Remote Access Server to host remote access software and allow up to eight simultaneous users to access all services on the LAN via Ethernet connection. Furnish minimum six client licenses of remote access software compatible with notebook computers to be installed under this project.

Features

Furnish Remote Access Server with same features as the Signal System Server.

Furnish remote access server with remote access software with the following features:

- Support of up to 8 simultaneous users initially with expansion capability of up to 12 simultaneous users
- Provision of each user with a Windows desktop with access to all applications and services on the TOC LAN at their remote location. When logged into remote access server, upon providing username and password, remote user shall be provided with a Windows desktop on their remote computer.
- Client software that is fully functional on all versions of MS Windows (version Windows XP and later)
- Allows remote user to access all drives on servers on the LAN and transfer files between their remote station and server on the LAN through windows file access methods such as Windows Explorer
- Supports remote user automatic reconnection if communication connection is lost
- Supports use of client remote access configuration by means of standard windows, menu driven interface.
- Shall support all services available over the LAN (including printers and servers)
- Shall require no more than 64 Mb of RAM to support each user
- Provide security and user authentication features and functionality
- Utilize Windows Remote Desktop functionality or approved equal.

Furnish server with all required operating system and third party support software to fully operate remote access server.

5. Backup Storage Server

Furnish Backup Storage server to provide backup and restore functionality of the hard-drive(s) in the Signal System Server.

Features

Furnish Backup Storage Server that has the same features as the Signal System Server as well as those that follow:

- RAID 5 hard drive configuration
- All drives are hot-swappable

D. Keyboard Video Mouse Switch

Furnish Keyboard-Video-Mouse (KVM) switch that allows a single keyboard, mouse, and RGB monitor to access and switch between multiple application servers in the rack cabinet. Furnish KVM switch unit that has the following features:

- Rack mountable with a maximum height of 1.75 inches
- Control of a minimum of 8 servers using a single unit
- Multiple switching methods including front panel, keyboard, or on-screen display
- Compatible with servers furnished under this project
- Includes keyboard, monitor, and pointing device

Furnish all necessary cabling to integrate KVM switch.

E. Computer Workstations

Each microcomputer workstation shall be upgradeable and shall meet the following minimum requirements:

- Dual (2) flat screen monitors and required video cables. Minimum monitor size shall be 20" , 18.5" viewable with a 1,600 × 1,200 resolution
- Dual processors with minimum clock running speed of 3.4 GHz for primary processor, minimum clock running speed of 2 GHz for secondary processor
- A minimum of 4GB of RAM shall be provided, expandable to 8GB of RAM
- A minimum dual SVGA video card with advanced graphics processor (AGP) and 3-D graphics with at least 768MB of video memory, a 64-bit graphics chip, upgradeable to 1.5 GB of video memory, with display resolutions up to 1920 × 1200, support for up to 16.7 million colors, and support for dual monitors
- A 100/1000 Base-T network interface card (NIC)

- 300-watt power supply
- Mini-Tower chassis
- Dual, Quad Core Intel Xeon processor, or approved equivalent
- 250 GB hard drive
- 48X/32X speed CD-RW/DVD drive
- Microsoft 2-button/scroll mouse
- Full function, 104 keyboard with separate numeric and cursor control keys
- Speakers
- A minimum of four (4) universal serial bus (USB) ports
- Six (6) expansion slots, with a minimum of:
    - One (1) AGP slot
    - Five (5) PCI slots
- Stand-alone UPS unit, with a minimum
    - Surge protection and filtering
    - Battery capable of providing 6 minutes of backup time at full load
    - Three (3) NEMA 5-15R output connections (with battery backup)
    - Three (3) NEMA 5-15R output connections (with surge protection)

The operating system for the signal system workstation(s) shall be Microsoft Windows 7. The release used shall be the latest revision available as recommended by the supplier of the system software. Install antivirus software.

The operating system shall provide for true multi-tasking and graphical user interface. It shall be possible for workstation users to run Windows-based programs in one or more windows while the traffic signal system applications software continues in full operation.

F. Notebook Computers

Provide notebook computers with Windows 7 operating system with the following minimum features:

- Processor clock speed 2.8 GHz,
- 4 GB of RAM expandable to 8 GB of RAM,
- 15 inch TFT display,
- 250 GB hard disk,

- one internal 24X CD-RW/DVD-ROM drive,
- one parallel port,
- one RS-232 serial port, or provided adaptor that replicates an RS-232 serial connection using one of the other data ports
- two USB ports
- AC adapter/charger, and a car cigarette lighter adapter cable,
- fully charged battery capable of a minimum of 2 hours of continuous operation,
- one spare battery,
- sound card with built in speakers,
- full function keyboard,
- pointing device that is integral to the case (clip on devices will not be acceptable),
- one cable 10 feet long for connection to a controller port,
- one cable 10 feet long for connection to network port on the workstation computer,
- video capture card capable of digitizing and displaying full motion composite (NTSC/PAL) video in real time, or external device capable of digitizing.
- full screen source editing features,
- one on board modem that provides 56,600 bps for data and 14,400 bps for fax with RJ11 connector,
- 100/1000 Base TX (100 Mbps/1 Gbps Ethernet) with RJ-45 connector on board,
- IEEE 802.11g wireless network adapter card
- USB to Serial cable adapter
- Antivirus software
- Compatible docking station
- cushioned, soft-side carrying case.

G. Printer

Furnish color laser printers with the following features:

- Utilizes the PCL 6 printer language featuring commands for fully integrated HP-GL/2 vector graphics and advanced imagery/special effects printing with a minimum of 80 internal, scalable fonts.
- Utilizes the latest version of Windows print typefaces.

- Provides a minimum of 16 MB of RAM.
- Provides modular input/output (I/O) and Ethernet 10/100/1000 Base-T network communications protocols.
- Comes equipped with an Ethernet 10/100/1000 Base-T network interface card and an RS-232 serial (9-pin) interface, bi-directional IEEE 1284 ECP-compliant parallel interface, one (1) USB port, and one (1) open EIO expansion slot.
- Prints a minimum 40 pages per minute (ppm) for both color and black and white prints.
- Provides 1,100 sheet capacity and 3 input trays supporting 8.5 x 11 inch, 8.5 x 14 inch, and 11 x 17 inch media.
- Prints a print resolution of a minimum 1200 x 600 DPI.

H. Equipment Rack Cabinet

Furnish equipment rack cabinets with railings and sockets for mounting of EIA 19" mountable equipment. Furnish units with removable and adjustable shelves and pull out drawers capable of holding 1.5 times the heaviest component required to be placed on shelf or drawer (when fully extended). Furnish racks with cable management and raceways to facilitate neat and orderly organization of all cables routed to equipment on the rack. Furnish rack cabinets with accessories to ensure cables are not kinked or pinched and that all minimum bend radii of cables are preserved. Furnish units that are painted black and made of quality, non-corrosive materials and non-peeling paint.

Furnish equipment rack cabinets that are Tripp Lite Model SR42UBDP, or approved equivalent, for compatibility with existing equipment rack cabinets in the Customer Service Center.

25.3. CONSTRUCTION METHODS

A. General

Furnish and install the central hardware required to support the software functions called for in Section 24 of these Project Special Provisions.

Furnish and install the hardware in the TOC and Customer Service Center as shown in the block diagram in the Plans.

Whenever possible, use existing cable raceways, ducts, raised floors, and drop ceilings to route cables. Within the Customer Service Center, route cables between rack cabinets and test cabinets using the existing overhead raceway. Within the TOC, route cables in the existing ceiling molding raceway and install new wall-mounted raceways as shown in the Plans. New wall-mounted raceways shall be of a similar material, size, and color as the existing wall-mounted raceways in the facility. Integrate with existing ceiling molding raceway using as small a break in molding as possible.

All computer hardware called for in this section shall be installed within sixty (60) days of date of purchase. Provide receipt with purchase date to Engineer during hardware installation. Any hardware older than sixty (60) days may be installed at the sole discretion of the Engineer.

All cables for each piece of hardware installed shall be clearly labeled, using a label convention approved by the Engineer. All cabling shall be manufacturer assembled and without any adapters, unless otherwise approved by the Engineer.

B. Surge Suppression Strips

Furnish and install surge suppression power strips for all computer hardware and peripherals, video subsystem, local area network, and central communications equipment not connected to a UPS.

C. Applications Servers

1. Distributed Processing Signal Server

Install distributed processing signal system server into new equipment rack cabinet in the Customer Service Center as shown in the Plans. Integrate with core Ethernet switch, KVM switch, and rack cabinet power source. Integrate with signal system communications server using direct serial, parallel, USB, or network connection. Fully configure server to operate distributed system processing software. Integrate with backup storage server to support scheduled and on-demand backup of data.

2. Signal System Communications Server

Install signal system communications server into new equipment rack in the Customer Service Center as shown in the Plans. Integrate with core Ethernet switch, KVM switch, and rack cabinet power source. Fully configure server and ports to facilitate signal system communications.

3. CCTV Video Server

Install video server into new equipment rack in the Customer Service Center as shown in the Plans. Integrate with core Ethernet switch, KVM switch, and rack cabinet power source.

4. Remote Access Server

Install remote access server into new equipment rack in the Customer Service Center as shown in the Plans. Integrate with core Ethernet switch, KVM switch, and rack cabinet power source.

Install and configure software with usernames, passwords, and Remote Access Windows desktop that allows client user gaining access to the LAN via the server, has complete access to all software applications on the LAN, available to a local user. Configure new notebook computers for remote access. Install all third party software and drivers required to create fully functional remote access server. Install all client software on new notebook computers required for operation of all software services available on the LAN.

5. Backup Storage Server

Install backup storage server into new equipment rack in the Customer Service Center as shown in the Plans. Integrate with core Ethernet switch, KVM switch, and rack cabinet power source.

Integrate with distributed processing signal server to support scheduled and on-demand backup of data.

D. Keyboard Video Mouse Switch

Install KVM switch into equipment rack cabinet at the Customer Service Center. Integrate with all application servers and rack cabinet drawer monitor, keyboard, and mouse.

E. Computer Workstations

Install one (1) computer workstation at the TOC as shown in the Plans. Integrate with network Ethernet switch. Fully configure microcomputer workstation with all client software to operate all signal system subsystems including distributed processing signal system and CCTV subsystem.

Configure Windows Remote Desktop on the workstation so that a user can remotely connect to each application server on the LAN and be presented with the same graphical user interface as if they were locally connected to the server.

F. Notebook Computers

Furnish three (3) notebook microcomputers. Deliver notebooks to the Customer Service Center prior to the start of the scheduled training. Fully configure notebook computers with all client software to operate all signal system and subsystems, including distributed processing signal system and CCTV subsystem. Configure notebook computers with client version of local intersection software to enable direct connection of notebook computer to the local distributed processing intersections for upload, download, monitoring, and manipulation of local intersection controller databases. Fully configure notebook computers such that when plugged into a network outlet on the Salisbury Signal System LAN, the user is able to login to the system as though he/she were logging in from any other workstation on the LAN.

Configure Windows Remote Desktop on the notebook computer so that a user can remotely connect to each application server on the LAN and be presented with the same graphical user interface as if they were locally connected to the server.

G. Printer

Furnish one (1) printer in the TOC. Integrate with the network Ethernet switch. Configure the new workstation and notebook computers to connect to the new printer over the LAN.

H. Equipment Rack Cabinet

Install rack cabinets at locations shown on the plans and as approved by the Engineer. Install one (1) rack cabinet in the Customer Service Center. Install full rack cabinets such that access to both the front and back of cabinet is available. Route cabling in cabinets using raceways.

I. Computer Hardware Integration

Fully integrate computer hardware equipment to form complete and operational systems as called for in these Project Special Provisions and shown on the block diagram in the plans. Install and configure all central computer hardware at the TOC and Customer Service Center to accomplish the functionality called for in these Project Special Provisions and hardware functionality required to support the computer software to be installed on to the computing hardware called for under this project. Integrate with LAN equipment and field equipment.

Prior to installing and configuring the computer hardware at each facility, develop a computer hardware architecture and system design document that shows the entire layout of the computer hardware systems and their interconnection. The function, description, and model number of each computer hardware component will be shown in the document. The report will describe the network topology in text and using graphics.

25.4. MEASUREMENT AND PAYMENT

(____) Server will be measured and paid as the actual number furnished, installed, integrated, and accepted.

KVM Switch will be measured and paid as the actual number furnished, installed, integrated, and accepted.

Computer Workstation will be measured and paid as the actual number furnished, installed, integrated, and accepted.

Notebook Computer will be measured and paid as the actual number furnished, installed, integrated, and accepted.

Printer will be measured and paid as the actual number furnished, installed, integrated, and accepted.

Equipment Rack Cabinet will be measured and paid as the actual number furnished, installed, integrated, and accepted.

Computer Hardware Integration will be measured and paid as a lump sum price. This item shall include the installation, testing, and all materials, equipment, labor, tools, storage, shipping, and incidentals necessary to install and make fully operational the computer hardware equipment at the TOC.

All cabling, labeling, sockets, outlets, conduit, cable routing, or other accessories required to configure, integrate, and interconnect computer equipment shall be considered incidental and shall not be paid for separately. This shall include provision of the surge suppression power strips.

Payment will be made under:

Distributed Processing Signal System Server ..... Each
Signal System Communications Server ..... Each
CCTV Video Server ..... Each
Remote Access Server ..... Each
Backup Storage Server ..... Each
KVM Switch ..... Each
Computer Workstation ..... Each
Notebook Computer ..... Each
Printer ..... Each
Equipment Rack Cabinet ..... Each
Computer Hardware Integration ..... Lump Sum

26. CENTRAL VIDEO SYSTEM

26.1. DESCRIPTION

Provide the central video hardware and software at the TOC necessary to control and monitor the closed circuit television (CCTV) cameras installed at locations shown in the Plans. The central video equipment shall include (but not be limited to) video monitors, camera control panels, and video monitor processors.

Provide remote monitoring of Salisbury CCTV cameras over a standard internet connection for remote users of the system.

26.2. MATERIAL

A. General

All central video equipment shall operate at 115 VAC (+/- 10 percent) at 60 Hz (+/- 10 percent). The equipment shall operate in a +32 to +120 degree F environment at 20 to 80 percent relative humidity.

For installations routing cables inside buildings, utilize existing cable raceways, electrical boxes, and metallic conduit where feasible. Where called for in the Plans, install new thin-walled EMT conduit that complies with the NEC and EIA/TIA Standard 569 and commercial building standards for telecommunications pathways.

B. CCTV Control Panel

Control consoles, with an integrated joystick device, shall be furnished and installed in the TOC. The console shall enable an operator to control, on a one-camera-at-a-time basis, using a joystick device, any connected remote camera's pan, tilt, zoom, and iris functions. Control of any connector camera's pan, tilt, zoom, and iris functions shall also be available through the system software. Pan, tilt, zoom, and iris functions shall be facilitated through the use of presets in the CCTV software.

Furnish desktop camera control panel with the new workstation in the TOC with the following operating elections:

- 10-digit keypad for video switching (camera and monitors) with a 3-digit LCD display
- Operating mode
- Pan/tilt position control using a joystick
- Focus: near/far
- Zoom: in/out
- Iris: open/close
- Auto iris override
- Preset selection (allow user to select up to ten different presets stored in the camera receiver driver)

The control panel shall interface to a serial communications board furnished and installed in the workstation.

C. Video Monitor Processor Unit

Furnish video monitor processor units that shall be servers capable of software decoding MPEG 4 digital video to a single video output for display on the LCD monitors. Furnish server with the following minimum specifications:

- Intel Quad Core (or greater) processor with a minimum speed of 3.0 GHz
- 1 GB of RAM, expandable to 32 GB
- DirectX 9 video card with display resolutions up to 1600 x 1200, compatible with the LCD monitors furnished under this project
- Capable of software decoding up four (4) H.264 digital video input streams at 25 frames per second, D1 resolution
- Minimum hard drive storage of 72 GB
- Operating system of Microsoft Windows Server 2008, and compatible with operating system of the video server installed under this project
- 10/100/1000 MB network interface card
- Minimum 2 PCI expansion slots
- Minimum 2 Universal Serial Bus ports
- Minimum 1 EIA 232/EIA 422 serial port
- Minimum 4 video output cards with DVI or HDMI outputs
- Rack mountable with a maximum height of 2 RU

D. LCD Video Monitors

Furnish new 36" LCD video monitors. The video monitors will be used in a 24/7/365 environment at the TOC.

LCD Video Monitor shall be UL listed, FCC Part 15 compliant, and shall meet FCC Class A or Class B device requirements, and Bellcore GR-1089-CORE electromagnetic compatibility requirements. Equipment shall meet the following specifications, standards, and subparts as applicable.

All video monitor equipment shall have any safety handling related instructions plainly marked on its case.

All switches, indicators, and connectors shall be clearly and permanently marked as to identity and function. Printed circuit boards shall have permanent markings, including a part number and functional name. Each removable module shall, as a minimum, include a permanently attached (e.g., stamped, etched, etc.) part number. Each removable module shall also include a permanently

attached serial number. All component identifications shall correctly correspond to schematics, parts lists, and written narratives included in operation/maintenance manuals.

Display monitors shall provide the following features and functions at a minimum:

- 1280 x 768 native pixel resolution
- 16.7 million displayable colors
- Brightness of at least 450 candela per square meter
- Contrast ratio of 600:1 or better
- 15:9 aspect ratio
- One BNC or RCA connector for NTSC composite color video input
- One digital RGB DVI or HDMI input
- One S-video input
- One Analog RGB computer UXGA video input
- RS-232 DB-9 interface control port
- Audio L/R stereo inputs and outputs
- Infrared remote control
- Switching between video inputs via remote control, on the monitor panel, or via serial port
- Horizontal and Vertical viewing angles of at least 160 degrees
- Swing-out articulating arm wall-mounting brackets

Each LCD video display monitor shall have a nominal operating temperature range of 5°C to +40°C and 20 to 80 percent relative humidity, non-condensing.

Each video display monitor shall weigh no more than 100 pounds without attachments/brackets and no more than 150 pounds with mounting brackets and tilting hardware.

Each LCD video display panel shall operate from 115 V +/- 10%, 60 Hz +/- 5% VAC input power. Power consumption shall be no more than 550W per display panel. Each video display panel shall be supplied with all the necessary hardware needed for mounting to wall or video wall units as directed by the engineer.

Furnish wall-mounting brackets (and all applicable hardware) for each LCD monitor that allow for the unit to be tilted. Ensure the wall-mounting bracket complies with the recommendations of the monitor's manufacturer and can be attached to the TOC wall as shown in the Plans.

26.3. CONSTRUCTION METHODS

A. General

Install and test all central video equipment in accordance with the manufacturer's recommendations. Furnish and integrate any manufacturer software not explicitly stated in these Project Special Provisions, but required for any central video equipment to provide full the stated functionality. Provide a copy of any installed manufacturer software to the Department.

Whenever possible, use existing cable raceways, ducts, raised floors, and drop ceilings to route cables. Within the TOC, route cables in the existing ceiling molding raceway and install new wall-mounted raceways as shown in the Plans. New wall-mounted raceways shall be of a similar material, size, and color as the existing wall-mounted raceways in the facility. Integrate with existing ceiling molding raceway using as small a break in molding as possible.

All cables for each piece of hardware installed shall be clearly labeled, using a label convention approved by the Engineer. All cabling shall be manufacturer assembled and without any adapters, unless otherwise approved by the Engineer.

B. Video Display

Install four (4) LCD monitors at the TOC. As shown in the Plans, mount each LCD monitor on the TOC wall. Mount the monitor and screen according to manufacture recommendations and as approved by the Engineer. Mount monitors in a manner that permits full access to all knobs, buttons, and dials on front and sides of monitor units. Allow a minimum of 36" between the bottom of the large screen and the floor and a minimum of 12" between the top of the large screen and the ceiling. Furnish cable raceways or wire molds of the same material, size, and color as the existing raceways for the discrete placement of cabling.

Prior to installation of the video displays, develop shop drawings and submit to Engineer for approval prior to commencement of installation of the units.

C. CCTV Control Panel

Furnish, install, and fully integrate CCTV control panels at the TOC workstation provided under this project. Furnish any additional hardware (serial boards, cables, etc.) necessary to connect the control panel to the workstation.

D. Video Monitor Processor Unit

Install one (1) video monitor processor unit at the TOC. Fully integrate with network Ethernet switch using Ethernet cabling and with video monitors using DVI or HDMI cabling.

E. LCD Video Monitor

Install four (4) LCD video monitors on the wall in the TOC as shown in the Plans. Insure that monitor is installed securely and in a fashion that allows for their removal for maintenance and access to monitor display controls. Connect, configure, and fully integrate each monitor with a video monitor processor unit. This includes installation of cabling and connection of monitors to power source.

26.4. MEASUREMENT AND PAYMENT

CCTV Control Panel will be measured and paid as the actual number furnished, installed, integrated, and accepted.

Video Monitor Processor Unit will be measured and paid as the actual number furnished, installed, integrated, and accepted.

LCD Video Monitor will be measured and paid as the actual number furnished, installed, integrated, and accepted.

No direct measurement will be made for surge suppression strips. These will be considered incidental to the devices attached to them.

No direct measurement will be made for conduit and cabling used to interconnect devices within buildings including coaxial cabling, network cabling, serial cabling, and power cabling. These items will be considered incidental to the devices they are connected.

Configuration and integration of central video components will be considered incidental and shall not be measured separately.

Payment will be made under:

CCTV Control Panel.....Each
Video Monitor Processor Unit.....Each
LCD Video Monitor.....Each

27. S YSTEM SUPPORT EQUIPMENT

27.1. DESCRIPTION

A. General

Furnish signal system support equipment with all necessary hardware in accordance with the plans and specifications.

B. Signal System Support Equipment

Furnish new, unused signal system support equipment to the Engineer in the quantities shown below:

- Three (3) 2070L signal controllers as installed and accepted under this project
- One (1) pole-mounted 336 cabinets as installed and accepted under this project
- Two (2) base-mounted 332 cabinets as installed and accepted under this project
- Three (3) DC isolators as installed and accepted under this project
- Three (3) AC isolators as installed and accepted under this project
- Six (6) detector cards as installed and accepted under this project
- Three (3) conflict monitors as installed and accepted under this project
- One (1) controller tester as specified below
- One (1) signal monitor tester as specified below
- Three (3) model 200 load switches as installed and accepted under this project
- Ten (10) surge protectors as installed and accepted under this project
- Two (2) flasher modules as installed and accepted under this project
- Four (4) flash transfer relays as installed and accepted under this project
- One (1) test cabinet and controller as specified below

C. Communication System Support Equipment

Furnish new, unused communication system support equipment to the Engineer in the quantities shown below:

- Five (5) fiber optic interconnect centers as installed and accepted under this project
- Eight (8) mechanical ST-type splice connectors as installed and accepted under this project
- Eight (8) factory connectorized (ST-type) jumpers of three foot length as installed and accepted under this project

- Eight (8) factory connectorized hybrid (ST-LC) jumpers of three foot length as installed and accepted under this project
- Eight (8) factory connectorized (ST-type) pigtails of ten foot length as installed and accepted under this project
- Ten (10) fiber optic field Ethernet switches as installed and accepted under this project

D. CCTV System Support Equipment

Furnish new, unused CCTV system support equipment to the Engineer in the quantities shown below.

- One (1) CCTV assembly as installed and accepted under this project
- One (1) CCTV Test Monitor as specified below
- One (1) CCTV Test Cabinet as specified below

27.2. MATERIAL

A. General:

Furnish equipment with test probes/leads, batteries (for battery-operated units), line cords (for AC-operated units), and carrying cases. Provide operating instructions and maintenance manuals with each item.

Before starting any system testing or training, furnish all communications system support equipment.

B. Signal System Support Equipment

1. Controller Tester

General Features

Provide bench type aluminum housing. Input panel and output panel shall be mounted at an angle to provide ease of viewing. Ensure that the tester incorporates handle(s) and a place to the store the C1 and C11 harness' for ease in transport. Suit case style housing is not acceptable.

Provide tester with a power switch and pilot lamp.

Provide terminations for each C1S and C11S connector pin, in the tester, so each function will be available for troubleshooting and/or testing.

Provide an internal DC power supply to operate output LED indicators, so that no power is drawn from the controller under test.

Provide means for testing controller AC power interruption, adjustable from .1 seconds to 2.5 seconds (minimum). Ensure power receptacle for controller is fuse protected.

Provide the following test points for external measurement:

- Neutral – Connected to power line neutral.
- Logic Ground – Connected to controller logic ground.

- Power Interrupt – Connected to the power interrupt circuit (12 VDC circuit).

Ensure test points are five-way binding post type.

Provide neatly screened labeling for all inputs and outputs. Stickers, overlays or "taped-on" labels are not acceptable. Ensure labeling corresponds to the local controller software being provided by NCDOT.

Provide rubber "feet" to minimize slippage on bench top.

Output Display

Provide a LED for each controller output. Ensure that each of the 8 vehicle phases, pedestrian phase, and four overlap LED indicators are of appropriate color, and are identified with the appropriate C1 pin number.

Provide LEDs that are the bright, wide angle viewing type. Ensure the color of the LED can be distinguished without power applied to the output display (diffused type).

Provide a display that is phase oriented with LEDs arranged in vertical rows. Phase function shall be indicated (1, 2, 3, etc.). Each overlap shall be indicated (A, B, C, D). Other C1 outputs should be placed in an area separate from the intersection display and overlap display. C11 outputs shall be in an area separate from all other outputs.

Ensure each LED output indicator is identified with the appropriate C1 pin number. Ensure that the functions of the outputs are labeled per the local controller software being provided by NCDOT (found in the chart below). No other vendor specific functionality shall be present on the display panel:

C1 Connector	Controller Function
35	2PY
36	6PY
37	4PY
38	8PY
83	-
84	-
91	-
93	-
100	-
101	FLASH
102	DETECTOR RESET
103	WATCHDOG

Input Panel

Provide "on-off-momentary" toggle action switches for all inputs. Ensure switches lock into position when the user pushes the switch "up", and is momentary when the user pushes the switch "down".

Ensure each switch is labeled as per the functions of the local controller software being provided by NCDOT. Ensure the switch is also identified with the appropriate C1 pin number. No other vendor specific functionality shall be present on the input panel. The defaults for inputs are listed in the chart below.

C1 Connector	Controller Function
56	Det. 1 / Ø1
39	Det. 2 / Ø2
58	Det. 3 / Ø3
41	Det. 4 / Ø4
55	Det. 5 / Ø5
40	Det. 6 / Ø6
57	Det. 7 / Ø7
42	Det. 8 / Ø8
60	Det. 11 / Ø1
43	Det. 12 / Ø2
62	Det. 13 / Ø3
45	Det. 14 / Ø4
59	Det. 15 / Ø5
44	Det. 16 / Ø6
61	Det. 17 / Ø7
46	Det. 18 / Ø8
63	Det. 32 / Ø2
65	Det. 34 / Ø4
64	Det. 36 / Ø6
66	Det. 38 / Ø8
76	Det. 42 / Ø2
78	Det. 44 / Ø4
77	Det. 46 / Ø6
79	Det. 48 / Ø8

C1 Connector	Controller Function
47	Det. 22 / ∅2
49	Det. 24 / ∅4
48	Det. 26 / ∅6
50	Det. 28 / ∅8
67	2 Ped
69	4 Ped
68	6 Ped
70	8 Ped
51	Preempt 1
54	-
75	-
81	Flash Sense
71	Preempt 3
72	Preempt 4
52	Preempt 2
53	Manual Control Enable
82	Stop Time
80	Advance
73	Preempt 5
74	Preempt 6

2. Signal Monitor Tester with Notebook Computer

Furnish a stand-alone portable signal monitor test unit with notebook computer intended for use on work-bench. The Tester shall use/control a notebook computer of equal requirements to other notebook computers furnished under this project. The Tester shall test Signal Monitor displays, timing and voltage functions, and input/output combinations of either true or false conflicts. Any software provided with the tester shall be modular, menu driven, and offer a "help" screen. A video "setup/usage" training tape shall be provided with each unit. All input/outputs shall be in plain English. It shall be possible to generate a hardcopy printout, or to store the results to a disk file. A "No Faults Detected" indication shall be displayed as appropriate.

3. Test Cabinet/Controller

Furnish and install a test cabinet/controller at the Customer Service Center. The test cabinet shall include a 2070L controller in a Type 332 cabinet. The test cabinet shall include a full complement of detector amplifiers, switch packs, a signal monitor, and one fiber optic field Ethernet

switch. The test cabinet shall also contain two (2) AC Isolators and two (2) DC Isolators. The test cabinet and panel shall be fully labeled.

Construction

The test cabinet shall have a heavy-duty aluminum dolly base with heavy duty casters. The base shall accommodate a fully equipped base-mounted 332 cabinet/controller. A pole or pedestal shall be attached to the base to support a display panel, which shall be located beside the cabinet convenient for use by maintenance personnel. The panel shall have all indicators and switches on the front, and shall have a suitable aluminum enclosure. The panel shall be fully labeled.

Indicators

The panel shall contain indicators to display the outputs of all the cabinet's traffic signal load switches. Red, yellow, and green indicators shall be used to display the outputs of the traffic signal load switches. In addition, indicators shall be provided for four (4) pedestrian displays and four (4) special functions. The indicators shall use incandescent bulbs or LED's that are user replaceable.

Controls

The panel shall be equipped with controls which are connected to simulate all of the inputs, for test purposes, to the controller which are not already accommodated by switches in the controller cabinet.

Harnesses

The panel shall be connected to the controller cabinet by means of harnesses. The harnesses shall be concealed in the pedestal or pipe supporting the panel and shall enter the cabinet from the bottom.

Connection to System

The test cabinet/controller will be connected to the system on dedicated communication channels. Furnish and install a jumper cable of sufficient length. This jumper cable shall be used to connect the test cabinet's fiber optic Ethernet switch to the communication system.

C. CCTV System Support Equipment

1. CCTV Test Monitor

Furnish portable color CCTV test monitor to allow for the field testing of CCTV assembly installations in the field and in the shop.

Furnish one (1) portable color monitor meeting the following specifications:

- Display: 4" Liquid Crystal Display, active matrix
- Input Signal: 2 NTSC inputs
- Color: Full Color or Black and White
- Picture Elements: 480 (H) x 234 (V)

- Dot Pitch: 0.171 (W) x 0.264 (H)
- Back Light: Built In
- Controls: Color, brightness, on/off, tint, red & blue drive
- Supply voltage: 12 VDC, 500 mA
- Connectors: Switchable video – BNC; Power – DC jack
- Operating Temperature: 32 degrees F to 104 degrees F
- Dimensions (maximum): 5.5 inches (W) x 3.6 inches (H) x 1.8 inches (D)o
- Weight (maximum): 1 lbs.

Include 12 feet of power and video cables with the monitor and case. Furnish monitor with all equipment necessary to operate from 120 VAC power source.

2. CCTV Test Cabinet

Furnish and install a CCTV test cabinet at the Customer Service Center. The test cabinet shall be identical to those provided in the field at CCTV locations under this project. The test cabinet and panel shall be fully labeled.

Construction

The CCTV test cabinet shall have a heavy-duty aluminum dolly base with heavy duty casters. The base shall accommodate a fully equipped base-mounted 336 cabinet.

Connection to System

The CCTV test cabinet will be connected to the system on dedicated communication channels. Furnish and install a jumper cable of sufficient length. This jumper cable shall be used to connect the test cabinet's fiber optic Ethernet switch to the communication system.

27.3. MEASUREMENT AND PAYMENT

Furnish 2070L Controller will be measured and paid as the actual number furnished and accepted.

Furnish Pole Mount 336 Cabinet will be measured and paid as the actual number furnished and accepted.

Furnish Base Mount 332 Cabinet will be measured and paid as the actual number furnished and accepted.

Furnish DC Isolator Card will be measured and paid as the actual number furnished and accepted.

Furnish AC Isolator Card will be measured and paid as the actual number furnished and accepted.

Furnish Detector Card will be measured and paid as the actual number furnished and accepted.

Furnish Conflict Monitor will be measured and paid as the actual number furnished and accepted.

Furnish Controller Tester will be measured and paid as the actual number furnished and accepted.

Furnish Signal Monitor Tester will be measured and paid as the actual number furnished and accepted. Notebook computer shall be considered incidental to the signal monitor tester and will not be paid for separately.

Furnish Load Switch will be measured and paid as the actual number furnished and accepted.

Furnish Surge Protector will be measured and paid as the actual number furnished and accepted.

Furnish Flasher Module will be measured and paid as the actual number furnished and accepted.

Furnish Flash Transfer Relay will be measured and paid as the actual number furnished and accepted.

Furnish Test Cabinet/Controller will be measured and paid as the actual number furnished and accepted.

Furnish Fiber Optic Interconnect Center will be measured and paid as the actual number furnished and accepted.

Furnish ST Splice Connector will be measured and paid as the actual number furnished and accepted.

Furnish ST Jumpers will be measured and paid as the actual number furnished and accepted.

Furnish ST-LC Hybrid Jumpers will be measured and paid as the actual number furnished and accepted.

Furnish ST Pigtails will be measured and paid as the actual number furnished and accepted.

Furnish Field Ethernet Switch will be measured and paid as the actual number furnished and accepted.

Furnish CCTV Assembly will be measured and paid as the actual number furnished and accepted.

Furnish CCTV Test Monitor will be measured and paid as the actual number furnished and accepted.

Furnish CCTV Test Cabinet will be measured and paid as the actual number furnished and accepted.

Payment will be made under:

Furnish 2070L Controller .....Each
Furnish Pole Mount 336 Cabinet .....Each
Furnish Base Mount 332 Cabinet .....Each
Furnish DC Isolator Card .....Each
Furnish AC Isolator Card .....Each
Furnish Detector Card .....Each

Furnish Conflict Monitor ..... Each
Furnish Controller Tester ..... Each
Furnish Signal Monitor Tester ..... Each
Furnish Load Switch ..... Each
Furnish Surge Protector ..... Each
Furnish Flasher Module ..... Each
Furnish Flash Transfer Relay ..... Each
Furnish Test Cabinet/Controller ..... Each
Furnish Fiber Optic Interconnect Center ..... Each
Furnish ST Splice Connector ..... Each
Furnish ST Jumpers ..... Each
Furnish ST-LC Hybrid Jumpers ..... Each
Furnish ST Pigtails ..... Each
Furnish Field Ethernet Switch ..... Each
Furnish CCTV Assembly ..... Each
Furnish CCTV Test Monitor ..... Each
Furnish CCTV Test Cabinet ..... Each

28. TES TING AND ACCEPTANCE

28.1. DESCRIPTION

Test all equipment, cable and software furnished and installed under this Contract according to the Standard Specifications. Conduct this testing in the presence of the Engineer. The Department reserves the right to perform any inspections deemed necessary to assure that the equipment conforms to the requirements specified herein.

28.2. INTERSECTION OPERATIONAL TESTS

The Department will conduct complete intersection inspections and operational tests for each project intersection. These inspections and tests will determine whether all the field equipment at each location is installed and permanently labeled properly, and that all functions are in conformance with the Contract Documents. The intersection operational tests will be a non-central controlled functional test of the local controller, including the time-base coordination, emergency vehicle preemption and railroad preemption functions, system detectors, and the full operation of the intersection. All work at the intersection except fiber optic cable installation and termination must be completed for the operational test. This work includes the installation of risers, conduit, junction boxes, conduit entrance into the existing foundation, fiber optic interconnect center, and fiber optic field Ethernet switch.

28.3. SYSTEM OPERATIONAL TEST

All equipment and software provided in this project shall be fully installed and operational prior to the start of the system operational test. These test procedures shall demonstrate that all equipment is fully integrated and operational, and is properly controlling the system.

Testing of the software and hardware at the TOC, remote video operation facilities, and other necessary locations shall include demonstrating proper operation based on these project special provisions. These tests shall also demonstrate the proper function of the CCTV surveillance system, including camera selection, pan/tilt/zoom functions, and remote monitoring of video images. These tests shall also demonstrate the proper operation of the new intersections on the graphics display system, the full functionality of the installed operator workstation, and demonstrating proper reception of video signals on the monitor and control panels.

Submit a system acceptance test procedure to the Engineer for review and approval before any tests are to be conducted.

Submit a System Operational test plan a minimum of sixty (60) days prior to the scheduled start of the test. The test plan will be reviewed by the Engineer, and either approve it or indicate changes that are required for approval. The Contractor shall then submit the revised test plan. This process shall be repeated until the Engineer is able to approve the test plan.

Provide an operational test matrix at least four weeks prior to the scheduled beginning of the system operational test. The test matrix shall include columns for a description of the test, a summary of the test procedures, a column with sufficient space for comments and a status (pass/fail) column.

Repair or replace any component or software module that fails the System Operational Test. Retest repaired or replaced component(s) or software module.

The testing shall include, but not be limited to, the following:

- Demonstration of all key functions of the distributed processing signal system software, including but not limited to:
  - Uploading and downloading of controller data
  - Remote access and paging
  - All monitoring functions
  - Detector logging
  - Signal monitor logging and uploading
  - Traffic responsive operations
  - Event scheduler
  - Security functions
  - Graphic displays
  - Reports
- Power failure recovery, auto re-boot, and start-up of the distributed processing signal system software
- Database access, modification, storage, and retrieval
- Database backup and restoration from archived backup
- Remote access to the signal system software and CCTV software from the notebook computers and remote video operation facilities
- Local Area Network operations
- Demonstrate that all features of the CCTV central software operates as called for with all field equipment

28.4. OBSERVATION PERIOD

A 60-day observation period shall begin upon the successful completion of the tests described in this Section of the Project Special Provisions as well as the correction of all known deficiencies, including minor construction items and punch-list items developed by the Engineer. During the observation period, the City shall observe equipment and software operations to determine that all components of the signal system operate properly and function according to the requirements of the Plans and these Project Special Provisions over an extended length of time.

During the observation period, respond to failures of the Contractor's equipment within two (2) hours and make repairs within eight (8) hours. For items that pose a traffic safety hazard (such as a controller failure), make repairs within four (4) hours. If any failures affect major system components (as defined below) for more than forty-eight (48) hours, the Department shall suspend the observation period beginning when the failure occurred. Resume the observation period after

successful repair or replacement of equipment or software. Failures that necessitate a redesign of any component or failures in any of the major system components exceeding a total of three (3) instances of like nature in any thirty (30) day period shall terminate the observation period. Once the redesigned component has been installed and/or the failures corrected, the observation period shall be restarted from zero with the approval of the Engineer.

The major system components are:

- Local controllers and cabinets
- Fiber Optic Communication Network, including field Ethernet switches
- System hardware and software
- CCTV System
- Local Area Network

A successful 60-day observation period shall consist of continuous operation with no more than a total of five (5) calendar days on non-operation due to mechanical, electrical, or other malfunctions.

The observation period shall be completed by the project completion date and prior to final acceptance of the project. The observation period shall not begin until all testing has been successfully completed and shall not begin without the approval of the Engineer.

28.5. FINAL ACCEPTANCE

Final system acceptance is defined as the time when all work and materials described in the Plans and these Project Special Provisions have been furnished and completely installed by the Contractor; all parts of the work have been approved and accepted by the Engineer; and successful completion of the 60-day observation period.

The project will be ready for final acceptance upon the satisfactory completion of all tests detailed in this Section of the Project Special provisions; the rectification of all punch-list discrepancies; the submittal of all project documentation; and the completion of all required training.

28.6. MEASUREMENT AND PAYMENT

Testing will not be measured for separate payment. Include the cost of all required testing in the unit bid price for other items furnished on this project.

29. TRA ININGG

29.1. DESCRIPTION

Provide training for the installation, operation and maintenance of the computerized traffic system.

29.2. MATERIAL

A. General

Provide training to properly install, operate, maintain, diagnose and repair each piece of equipment and the software associated with the system. Provide approved manufacturer's representatives or other qualified personnel to conduct training courses. Provide training for a total of fifteen City and Department personnel.

1. Submittal Requirements

Prior to commencement of the training course, submit the following to the Engineer for review and approval:

- Detailed course curricula
- Draft training manuals, and course handouts
- Resumes of all instructors

The Engineer may request modification to the submitted material

For all training programs, a staff of engineers, technicians, and maintenance personnel familiar with traffic signal systems will be the training participants. A "day" of training shall consist of training conducted between the hours of 8:30am and 4:30 pm. For each session, provide all training materials (manuals, notebooks, hand-outs, etc.) as specified in the Documentation Section of these Project Special Provisions.

Qualified instructors shall present all training courses, lectures, and demonstrations in person. The Engineer shall approve all instructors.

Unless otherwise specified, accommodate a minimum of fifteen (15) persons at each session. Limit all hands-on computer exercises to two participants per computer. Furnish additional networked computers (equivalent to those furnished with the project) as necessary to maintain that ratio of two participants per computer.

Conduct all training courses at a location provided by the Contractor within the City of Salisbury and at a time mutually agreed upon, but not later than the start of system acceptance testing. Provide training material, manuals, and other handouts to serve not only as subject guidance, but also as quick reference for use by the students. Deliver course material in reproducible form immediately following the course.

B. Subject Areas

Provide the training sessions at the required durations as listed in the Table below. A more detailed description of the required content of each training session is provided in the following

sections. As part of the Project Implementation Schedule, propose the time of occurrence of each such training schedule.

Subject	Minimum Duration
System Overview	1 Day
Traffic Control Center Computer Hardware – Session 1	1 Day
Traffic Control Center Computer Hardware – Session 2	1 Day
Traffic Control Applications Software – Session 1	1 Day
Traffic Control Applications Software – Session 2	2 Days
Traffic Control Applications Software – Session 3	3 Days
Traffic Control Applications Software – Session 4	1 Day
Traffic Control Applications Software – Session 5	2 Days
Signal Controller and Cabinet Assemblies (for Signal Timing Personnel and Maintenance Personnel)	3 Occurrences at 5 Days Each
Communications Hardware – Session 1	1 Day
Communications Hardware – Session 2	1 Day
Central Communications, LAN Equipment, and Software	3 Days
CCTV Central and Field Equipment – Session 1	2 Days
CCTV Central and Field Equipment – Session 2	1 Day

C. Required Content and Format

1. Traffic Control System Overview

This training session shall consist of a lecture and discussion on the overall. The purpose of the session is to provide an overview of the traffic control system. This training session shall have a minimum duration of one (1) day.

2. Traffic Control Center Computer Hardware

The training session shall consist of classroom training and workshops regarding the operation of each of the traffic control system hardware elements and the operator interface. Conduct training by experienced vendor personnel.

The first session shall involve the operation and maintenance procedures for each element of the traffic control system hardware. As part of this session, stress the precautions that must be observed when operating the equipment. As a minimum, cover the following subjects in this segment of the training session:

- Overview of equipment functions and interactions.
- Computer system operation; restart, cold start.
- Functional operation of the servers, Ethernet Control Center LAN and backup system (including maintenance, proper replacement, etc.)
- Traffic Control Center and Customer Service Center workstation and printer operation, maintenance, proper replacement, etc.
- Central communication operation.
- Troubleshooting and problem identification of equipment.

At a minimum, the second session shall consist of the following:

- Operating system, including network operating system
- Operating system commands, including loading and executing programs, and archiving data to the backup system
- Detection of abnormal conditions within the operating system and hardware
- File management and disk organization
- Techniques for creating and editing files, including those used for the traffic control system databases

Each of these two training sessions shall have a minimum duration of one (1) day (lectures and/or workshops).

3. Traffic Control Applications Software

These sessions of training for NCDOT and City staff shall include the basic theory and functional application and operation of the traffic control software supplied by the Contractor, including the interface between the application program and the microcomputer operating system. This training system shall include but not be limited to:

The first session shall cover the fundamentals of the traffic control software supplied by the Contractor. This shall include, but not be limited to:

- Time-of-day operation and event scheduling
- Traffic responsive pattern selection algorithms

The first session of this training course shall consist primarily of lectures and shall have a minimum duration of one (1) day.

The second session shall include, but not be limited to:

- Reporting capabilities
- Interactive database manipulation

- Theory and application of traffic responsive operation
- Special function features

The second session shall include a mixture of lectures and workshops and shall have a minimum of duration of two (2) days.

The third session shall consist of an overview of the two previous sessions. The training shall emphasize operation of the system including recommended procedures. Allow sufficient time to answer NCDOT and City questions. This session shall consist of a mixture of lectures and "hands-on" workshops and shall have a minimum duration of three (3) days. Course material shall include the software documentation and the system user's manuals.

The fourth session shall cover the development and modification of screens used in the graphics display of the traffic control applications software. This fourth session shall include lecture and classroom exercises and shall have a minimum of duration of one (1) day. Course material shall include the software documentation and the system user's manuals.

The fifth session shall cover the creation, placement and operation of the dynamic portions of the graphics display of the traffic control applications software. Upon completion of this session the NCDOT and City personnel shall be able to prepare dynamically functioning graphics for the traffic control applications software. This fifth session shall include lecture and classroom exercises and shall have a minimum of duration of two (2) days. Course material shall include the software documentation and the system user's manuals.

Maintain the order of these sessions as described above. The length of the sessions may vary with the mutual consent of the City, NCDOT, and the Contractor.

4. Signal Controller and Cabinet Assemblies

Hold three identical controller training sessions for maintenance personnel. Each of the identical training sessions shall consist of five (5) consecutive days, beginning on a Monday. Conduct one of these training sessions prior to the installation of any new controllers and cabinets on the project.

Training for controllers and cabinets shall be integrated into a single session with training exercises for cabinets and training exercises for controllers running concurrently. Instructors from the controller vendor and instructors from the cabinet vendor shall be in attendance during all days of the session.

Controller-specific instruction during the session shall be taught by experienced vendor personnel who thoroughly understand both the traffic engineering aspects of signal timing and the entry of timing into the controller and internal TBC's. Cabinet-specific instruction during the session shall be taught by a field service specialist(s) employed by the manufacturer.

These three sessions include training for NCDOT and City traffic engineering, signal timing, and maintenance personnel on controller and internal TBC operation and cabinet assemblies.

The signal controller and cabinet assemblies session shall include, but not be limited to, the following.

- Formal classroom presentation of the functional operation of the signal cabinet, including a discussion on each individual component of the cabinet that details it function, installation techniques, and normal operation
- Formal classroom presentation of the functional operation of the 2070L controller.
- Formal classroom presentation of proper cabinet wiring procedures
- Hands-on workshop on installation of electrical components and surge protection for cabinets.
- Formal classroom presentation and hands-on workshop on operation of signal monitor tester
- Hands-on workshop on timing data entry for 2070L controller.
    - All local intersection timing parameters
    - All coordination timing parameters
    - All parameters and threshold levels associated with traffic responsive operation
- Formal classroom presentation and hands-on workshop on operation of local controller utility software
- Formal classroom presentation and hands-on workshop on operation of controller tester
- Hands-on workshop of proper installation, programming, and troubleshooting of conflict monitors
- Hands-on workshop of proper installation, programming, and troubleshooting of detector cards and lead-in cable
- Hands-on workshop wherein maintenance personnel will troubleshoot simulated controller and cabinet assembly faults to the component level

The signal controller and cabinet assemblies session shall have the following daily agenda topics:

- Day 1 – Signal cabinets
- Day 2 – Signal cabinets (continued)
- Day 3 – Signal controller software and hardware
- Day 4 – Signal controller software and hardware (continued)
- Day 5 Morning – Signal controller software and hardware (continued)
- Day 5 Afternoon – Conflict monitors

5. Communications Hardware

The training session shall consist of classroom training and workshops regarding the operation of each of the communications system hardware elements and the technician interface. Conduct training by experienced vendor personnel.

The first session shall involve the operation and maintenance procedures for the fiber optic Ethernet switches (field and central models). At a minimum, cover the following subjects in this segment of the training session:

- Overview of equipment functions and interactions.
- Initialization startup and restarting of hardware.
- Setup and configuration of hardware.
- Functional operation of the fiber optic Ethernet switches (including maintenance, proper replacement, etc.)
- Programming required functionality of Ethernet switches
- Troubleshooting and problem identification of equipment.

The second session shall involve the operation and maintenance procedures for the wireless radio systems. At a minimum, the second session shall consist of the following:

- Overview of equipment functions and interactions.
- Overview of setup and operation of any associated software.
- Initialization startup and restarting of hardware.
- Functional operation of the wireless radio systems (including maintenance of fiber optic Ethernet switches and antennas, integration with signal controller and cabinet, etc.)
- Troubleshooting and problem identification of wireless radio equipment.

Each of these two training sessions shall have a minimum duration of one (1) day (lectures and/or workshops).

6. Central Communications, LAN Equipment, and Software

Provide a training session, conducted by experienced vendor personnel and consisting of both operation and maintenance training of the Central Communication and LAN Equipment for the signal system. As a minimum, this session shall include the following subjects:

- Present system topology
- Operational theory of IP/Ethernet communications
- Initial setup and configuration of core Ethernet switch
- Initital setup and configuration of network and field Ethernet switches

- Operational procedures for network monitoring software
- Operational procedures for Ethernet switches
- Operational procedures for remote user operation
- Procedures for adding future devices to the network
- Troubleshooting procedures

Provide a workshop session to reinforce the lectures and demonstrate troubleshooting and problem identification of equipment to the component level as well as validation of communications.

This lecture/workshop training session shall have a minimum duration of three (3) days.

7. CCTV Central and Field Equipment

Provide two sessions for the CCTV central and field equipment training.

The first session shall address the maintenance of the CCTV equipment including CCTV camera, equipment cabinet, and controller. The training shall address the preventative maintenance and troubleshooting procedures for all the field and central equipment.

This session shall consist of a mixture of lecture and hands-on workshops and shall have a minimum duration of two (2) days.

The second session shall address the operational theory and procedures of the CCTV system. This training shall be oriented towards users of the system. The training shall address the use of, but not limited to, the following devices:

- Video Server
- Camera control software
- Camera control panel
- LCD monitors and video projector (including video monitor processor units)

Include "hands-on" training workshop with a minimum duration of one (1) day as part of this session. The CCTV training sessions shall be presented by field service specialist(s) employed by the suppliers of the CCTV system components.

29.3. MEASUREMENT AND PAYMENT

Training will be paid for at the contract lump sum price.

Payment will be made under:

Training.....Lump Sum

30. TEMPORARY TRAFFIC CONTROL

30.1. DESCRIPTION

Furnish, install, maintain, relocate, and remove temporary traffic control devices in accordance with these Project Special Provisions, the Transportation Management Plan, the MUTCD, and Roadway Standard Drawings to maintain and control vehicular and pedestrian traffic in a safe and efficient manner during signal system construction. All temporary traffic control devices furnished by the Contractor shall remain the property of the Contractor, unless otherwise specified in the contract.

30.2. GENERAL REQUIREMENTS

A. Maintenance of Traffic

The Contractor will be required to maintain traffic, both vehicular and pedestrian, within the limits of the project, including roadways that cross or intersect the project, unless otherwise provided for in the contract or approved by the Engineer. The Contractor shall conduct his work in a safe manner that will create a minimum amount of inconvenience to traffic, both vehicular and pedestrian.

Maintain vehicular and pedestrian traffic through work zones in accordance with these Project Special Provisions, the MUTCD, and Roadway Standard Drawings, 23 CFR 630 Subparts J and K and the Transportation Management Plan (TMP).

Mark all hazards with signs, barricades, drums or other warning devices until the hazard is eliminated.

B. Temporary Lane Closures

1. General

Operate all equipment and personnel within the designated work area during lane closures. Do not impede or stop traffic for the purpose of performing construction related work on the traffic side of the lane closure, except when called for in the Transportation Management Plan.

Install lane closures with the traffic flow, beginning with devices on the upstream side of traffic. Remove lane closures against the traffic flow, beginning with devices on the downstream side of traffic.

Vehicles used to install or remove lane closures shall have flashing or rotating beacons.

2. Intersections

When construction proceeds through an intersection, provide flagger(s) and all other necessary Traffic Control as required by the Plans to direct the traffic through the intersection. When an intersection is signalized, have authorized personnel place the signal in flash mode prior to beginning work in the intersection.

When it is necessary to close a lane of traffic for construction on the departure (downstream) side of an intersection, implement the lane closure on the approach (upstream) side of the intersection. Close the appropriate lane of dual turn lanes that would otherwise turn into the lane that is closed on the departure side of the intersection.

C. Traffic Stoppage

Limit the stoppage of traffic to times specified in the Plans. Provide enough time between consecutive stoppages to allow the traffic queue to dissipate.

D. Traffic Control Supervision

Provide the service of at least one qualified work zone supervisor. The work zone supervisor shall have the overall responsibility for the proper implementation of the traffic management plans and ensure all employees working inside the NCDOT and City rights-of-way have received the proper training appropriate to the job decisions each individual is required to make.

The work zone supervisor is not required to be on site at all times but shall be available to address concerns of the Engineer. The name and contract information of the work zone supervisor shall be provided to the Engineer prior to or at the preconstruction conference.

Qualification of work zone supervisors shall be done by an NCDOT approved training agency or other approved training provider. For a complete listing of these, see the Work Zone Traffic Control's webpage: http://www.ncdot.gov/doh/preconstruct/wztc/

Coordinate with and cooperate with traffic control supervisors of adjacent or overlapping construction projects to insure safe and adequate traffic control is maintained throughout the projects at all times including periods of construction inactivity in accordance with Article 105-7 of the Standard Specifications.

E. Vehicular Access

Maintain continuous and safe vehicular access, including but not limited to, all residences, businesses, schools, police and fire stations, hydrants, other emergency services, hospitals and mailboxes. Conduct operations in such a manner as to limit the inconvenience to property owners.

F. Pedestrian Access

Maintain continuous and safe pedestrian access, including but not limited to, all residences, businesses, schools and mailboxes. Conduct operations in such a manner as to limit the inconvenience to pedestrians. Pay special attention to pedestrian areas used by visually-impaired pedestrians. Coordinate with local Orientation and Mobility Specialists to make appropriate provisions for visually impaired pedestrians when construction activities will disrupt pedestrian paths that they normally use.

Protect open excavations within or adjacent to areas subject to pedestrian traffic from pedestrian intrusion by surrounding the excavation/hazard with orange plastic mesh construction fencing (also referred to as safety fence, tree protection barricade, warning fence, etc.) or other method approved by the Engineer. Do not use tape, flagging, rope or plastic chain strung between barricades, cones or stakes.

Determine the extent of pedestrian needs through engineering judgment or by the traffic control supervisor responsible for the work zone. Inspect the work zone regularly so effective pedestrian traffic is maintained. When pedestrian movement through or around a work site is necessary, provide a separate usable footpath. If the previous pedestrian facility was accessible to pedestrians with disabilities, provide a footpath during temporary traffic control that is accessible. Do not have any abrupt changes in grade or terrain that could cause a tripping hazard or could be a barrier to

wheelchair use. Provide barriers and channelizing devices that are detectable to pedestrians who have visual disabilities. Provide temporary pedestrian facilities that are made of concrete, asphalt or other suitable material as approved by the Engineer at all locations where the existing sidewalks have been removed for construction operations.

Do not sever or move pedestrian facilities for non-construction activities such as parking for vehicles and equipment. Separate pedestrian movements from both work site activity and vehicular traffic.

G. Alternate to Transportation Management Plan

If desired, submit an alternate TMP a minimum of 30 calendar days in advance of the anticipated implementation to allow for adequate review time. Do not implement alternate plans for traffic control until approved in writing and properly sealed. No adjustment in compensation or extension of the completion date(s) will be allowed due to the review time of the alternate. If an alternate TMP is implemented, the Contractor shall be responsible for any unanticipated changes to subsequent Steps.

H. Temporary Traffic Control Plan Not Fully Covered in the Contract

When the Transportation Management Plan does not cover a particular work function, notify the Engineer to allow for the development or modification of a sealed set of the Transportation Management Plans.

30.3. MATERIALS

A. Work Zone Traffic Control Devices

Refer to Division 10 of the Standard Specifications.

Use temporary traffic control devices that comply with 23 CFR 630 Subpart K. Provide a Type 7 material certifications in accordance with Article 106-3 of the Standard Specifications at least 72 hours before use for all used temporary traffic control devices.

Provide temporary traffic control devices that are listed on the NCDOT Approved Product List.

B. Work Zone Signs

Refer to Division 10 of the Standard Specifications:

Item	Section
Barricade Mounted Signs	1089-3
Work Zone Signs	1089-1
Work Zone Sign Supports	1089-2

Portable work zone signs shall be roll up or approved composite substrates. Use portable work zone signs only with portable work zone sign stands specifically designed for one another.

Provide portable work zone sign stands, portable signs and sheeting that meet NCHRP 350 for Category II traffic control devices and are listed on the NCDOT Approved Products List.

Provide portable work zone signs and stands that are crash tested together as a system by the manufacturer. Poor performance of portable work zone signs or portable work zone sign stands at

any site, whether or not related to a specific contract, will be grounds for non-acceptance of a product on any project under contract.

C. Flashing Arrow Boards

Refer to Division 10 of the Standard Specifications:

Item	Section
Flashing Arrow Boards	1089-6

Use arrow boards that are on the NCDOT Approved Product List.

Poor performance of arrow boards at any site, whether or not related to a specific contract, will be grounds for non-acceptance of a product on any project under contract.

D. Portable Changeable Message Signs

Refer to Division 10 of the Standard Specifications:

Item	Section
Portable Changeable Message Signs	1089-7

Use portable changeable message signs that are on the NCDOT Approved Products List.

Poor performance of portable changeable message signs at any site, whether or not related to a specific contract, will be grounds for non-acceptance of a product on any project under contract.

E. Drums

Refer to Division 10 of the Standard Specifications:

Item	Section
Drums	1089-5

Provide drums that are on the NCDOT Approved Products List.

F. Cones

Refer to Division 10 of the Standard Specifications:

Item	Section
Cones	1089-5

Provide cones that are on the NCDOT Approved Products List.

G. Barricades

Refer to Division 10 of the Standard Specifications:

Item	Section
Barricades	1089-3

Provide barricades that meet NCHRP 350 for Category II traffic control devices and are on the NCDOT Approved Products List.

H. Flaggers

Refer to Division 10 of the Standard Specifications:

Item	Section
Flaggers	1089-10

I. Truck Mounted Attenuators

Refer to Division 10 of the Standard Specifications:

Item	Section
Truck Mounted Impact Attenuators	1089-9

Use TMAs that meet NCHRP 350 Test Level II or III for work zone traffic control devices and are on the NCDOT Approved Products List.

Historical performance of the TMA will help determine the future use of the material by the Department, even if the TMA has been approved. Poor performance of TMA at any site, whether or not related to a specific contract, will be grounds for non-acceptance of a product on any project under contract.

J. Skinny Drums

Refer to Division 10 of the Standard Specifications:

Item	Section
Skinny Drums	1089-5

Provide skinny drums that are on the NCDOT Approved Products List.

30.4. CONSTRUCTION METHODS

A. Work Zone Traffic Control Devices

Ensure all traffic control devices inspected and approved before using them on the project. Install temporary traffic control devices before construction operations begin and during the proper phase of construction. Maintain and relocate temporary traffic control devices during the time they are in use. Keep these devices in place as long as they are needed and immediately remove thereafter. When operations are performed in stages, install only those devices that apply to the present conditions.

B. Work Zone Signs

1. Work Zone Signs (Barricade Mounted)

Mount approved composite or roll-up signs to barricade rails so that the signs do not cover more than 50% of the top two rails or 33% of the total area of the three rails. Mount signs at least 1 foot from the ground to the bottom of the sign.

2. Work Zone Signs (Portable)

Install the portable work zone sign and sign stand to stand plumb within 10° left and right, within 20° front and back and be capable of standing erect in windy conditions.

Install roll-up or approved composite signs at least 1 foot from the bottom of the sign to the edge of pavement elevation on two-lane two-way roadways and at least 5 feet from the bottom of the sign to the edge of pavement elevation on multi-lane roadways.

Clean the sign face prior to use.

When not in use for periods longer than 30 minutes, lay the portable work zone sign flat on the ground and collapse the sign stand and lay it flat on the ground.

C. Flashing Arrow Boards

Use arrow boards that have the capability to display mode selections.

Do not use straight-line caution or chevron displays.

Mount flashing arrow boards on trucks, trailers, or other mobile units.

Expedite repairs due to failure, malfunction or damage to an arrow board. Furnish another arrow board approved by the Engineer during the repair time. Repair or replace arrow boards immediately; otherwise, suspend all construction activities requiring the use of the sign until the sign is restored to operation.

Perform all maintenance operations recommended by the manufacturer of the sign.

D. Portable Changeable Message Signs

Mount all portable changeable message signs on a trailer or truck so as to support the message board in a level position and in accordance with the Plans. Align and sight the portable changeable message sign to provide optimal driver visibility. Messages on a portable changeable message sign shall consist of no more than 2 phases, and a phase shall consist of no more than 3 lines of text. Each phase shall be capable of being understood by itself, regardless of the order in which it is read. Messages shall be centered and uppercase within each line of the legend. If more than one portable changeable message sign is simultaneously legible to road users, then only one of the signs shall display a sequential message at any given time. As guidance, the display time for each phase shall be at least 2 seconds, and the sum of the display times for both of the phases shall be no more than 8 seconds. Sign operator will adjust the display rate so the 2 phase message can be understood by the motorist approaching the sign at the posted speed limit. Relocate the units for the various stages of construction as shown in the Plans or as needed to adequately inform the motorists.

Provide an experienced operator for the portable changeable message sign during periods of operation to ensure that the messages displayed on the sign panel are in accordance with the Plans and in accordance with message content guidelines. Ensure that the message sign is illuminated properly to meet the existing light conditions, and that all adjustments for operation of the sign are made as needed to properly guide motorists.

Expedite repairs due to failure, malfunction, or damage to a portable changeable message sign. Furnish another portable changeable message during the repair time. Repair and/or replace portable

changeable message sign immediately; otherwise, suspend all construction activities requiring the use of the sign until the sign is restored to operation.

Perform all maintenance operations recommended by the manufacturer of the sign. Include the periodic cleaning of the sign face and associated solar panels in maintenance operations.

E. Drums

Use the same type of reflective sheeting on all drums installed at any one time during the life of the project. Spacing of these devices is equal in feet to the speed limit in the taper and twice the speed limit in the tangent sections

Use a ballasting method in accordance with the manufacturer's specification. When using tire ballasting method, use approved manufacturer's tires and place the tires flush with the ground.

Immediately replace any drum, ballast or reflective sheeting that are torn, crushed, discolored or otherwise damaged.

F. Cones

Use reflective adhesive sheeting on all cones used between dusk and dawn. Use the same type of reflective sheeting on all cone collars installed at any one time during the life of the project. Do not use cones in the upstream taper of lane or shoulder closures for multilane roadways and use for no longer than 3 consecutive days.

Use ballasting methods in accordance with manufacturer's specification. Cones may be used on all facilities for daytime and nighttime work with speed limits at or below 55 mph. If used at night, the cones shall have adhesive reflective sheeting and shall meet the height requirements in the Roadway Standard Drawings.

Cones may be used instead of drums, where allowed in the TMP plans or by the Engineer, on facilities with speed limits above 55 mph, if both the work is performed during daylight conditions and the devices are removed after each work period. Drums shall be used in the tapers.

The maximum spacing for cones on multi-lane roadways is equal in feet to the posted speed limit.

Immediately replace any cone that is torn, crushed, discolored or otherwise damaged.

G. Barricades

At the end of the workday, properly close the road where construction equipment accesses a road closure through Type III barricades.

Use sandbags or other approved ballasting methods to prevent overturning of barricades by the wind. If needed, place sandbags or other acceptable ballasting on the feet of the frame. Do not ballast barricades with objects such as rocks or chunks of concrete.

Do not anchor barricades to any pavement surfaces unless such anchoring method has passed the crash test requirement of NCHRP 350 for work zone category II devices.

Point the striped diagonals on the barricade rails in the direction of traffic flow.

H. Flaggers

Provide the service of properly equipped and qualified flaggers (see Roadway Standard Drawings No. 1150.01) at locations and times for such period as necessary for the control and protection of vehicular and pedestrian traffic. Anyone who controls traffic is required to be qualified. Qualification consists of each flagger receiving proper training in the set-up and techniques of safely and competently performing a flagging operation. Qualification of flaggers is to be done by an NCDOT approved training agency or other approved training provider. For a complete listing of these, see the Work Zone Traffic Control's webpage.

Prior to beginning work on the project, a Qualification Statement that all flaggers used on the project have been properly trained through an NCDOT approved training resource shall be provided to the Engineer.

Use flagging methods that comply with the guidelines in the MUTCD.

I. Truck Mounted Attenuator

Before use, furnish the Engineer detailed brochures, specifications, and other manufacturer's data that completely describes the performance criteria, installation, and instructions for the TMA.

Use only TMAs that meet the crash test requirements of Standard Specifications Article 1089-9(A).

Do not park TMAs against rigid objects (i.e. bridge piers or portable concrete barrier) except as a temporary safety measure and in no case for longer than 72 hours. Install the TMA on a truck that is fully operational, in good running order, and in accordance with the manufacturer's specifications.

Use the appropriate lighting and delineation on the truck and TMAs as shown in the contract.

Repair or replace within 24 hours any attenuator that becomes crushed or otherwise damaged so that it will perform its intended purpose. Suspend all construction activities until the attenuator is repaired or replaced. Provide safe control of traffic until the attenuator has been repaired by using approved methods.

J. Skinny Drums

Use the same type of reflective sheeting (Type III High Intensity Prismatic or greater) on all skinny drums installed at any one time during the life of the project. Use ballasting methods in accordance with the manufacturer's specification.

Immediately replace any skinny drum, ballast or reflective sheeting that are torn, crushed, discolored or otherwise damaged.

Skinny drums may be used instead of cones on all facilities with speed limits of 55 mph and below. Spacing of these devices is equal in feet to the speed limit in the taper and twice the speed limit or every other skip in the tangent sections.

Skinny drums may be used instead of cones and drums where allowed in the TMP or by the Engineer on facilities with speed limits above 55 mph, if all the following apply:

1) The work is performed during daylight conditions,

2) The devices are removed after each work period and

3) Drums are used in the tapers.

Do not use skinny drums on control-of-access facilities with speed limits above 55 mph that either involve night work or allow devices to remain in place overnight.

Do not use skinny drums for tapers on multilane or control-of-access roadways with speed limits above 55 mph.

Do not intermix with drums or cones unless directed by the Engineer or the TMP.

K. Law Enforcement

Use uniformed law enforcement officers and marked law enforcement vehicles equipped with blue lights mounted on top of the vehicle and law enforcement vehicle emblems to direct or control traffic as required by the Plans or by the Engineer.

Use a law enforcement officer(s) when an existing traffic signal must be taken out of operation in order to remove and replace the existing cabinet and controller. Use a law enforcement officer(s) when a traffic signal must be deactivated while constructing a conduit entrance into an existing cabinet foundation (subject to the Engineer's prior approval), while overlaying an existing cabinet foundation with a new preformed foundation and while removing and replacing an existing foundation with a new preformed foundation in the same location.

L. Pedestrian Safety

Install measures for separating pedestrian traffic from the work area and from adjacent vehicular traffic where pedestrian paths are evident or sidewalks are present. Use protective barricades, warning and guidance devices and signs to provide a safe, well-defined passageway for pedestrians. When a sidewalk must be closed temporarily to perform construction work, refer to Chapter 6D, "Pedestrian and Worker Safety," and Typical Applications 28 and 29 (TA-28 and TA-29) of the 2009 Edition of the Manual on Uniform Traffic Control Devices (MUTCD 2003) for appropriate pedestrian traffic control measures. The MUTCD 2009 is available online at the following web address: http://mutcd.fhwa.dot.gov

30.5. MAINTENANCE AND INSPECTION

A. Work Zone Traffic Control Devices

Submit a proposed traffic control device maintenance schedule and checklist for approval prior to construction. Perform continuous maintenance and scheduled inspections of traffic control devices. Review and maintain all traffic handling measures to ensure that adequate provisions are in place for the safety of the public and workers.

Maintenance activities include cleaning, repair or replacement of temporary traffic control devices that are damaged, torn, crushed, discolored, displaced or deteriorated beyond effectiveness.

If there are traffic control devices in use, perform inspection on a daily basis.

If the name and telephone number of the agency, Contractor or supplier is shown on the non-retroreflective surface of all channelizing devices, use letters and numbers that are a non-reflective color and not over 2 inches in height.

30.6. FAILURE TO MAINTAIN TRAFFIC CONTROL

Failure to maintain temporary traffic control measures and traffic control devices in accordance with this Project Special Provision may result in formal notification of noncompliance. Implement remedial action immediately for imminent danger situations as directed. Implement remedial action within 48 hours after notification of a safety issue that is not an imminent danger situation. See Articles 107-21 and 108-7 of the Standard Specifications.

Failure to comply may result in having the work performed with available forces and equipment. In cases of willful disregard for the safety of the public, the Engineer may proceed immediately to implement the measures necessary to provide the appropriate level of traffic control to ensure that the safety of all concerned parties is maintained.

30.7. MEASUREMENT AND PAYMENT

Nominal dimensions will be used to compute sign panel areas.

Work zone signs (barricade mounted) will be measured and paid for as the actual number of square feet satisfactorily installed on barricades and accepted by the Engineer. Payment will be made for the initial installation only. Relocation of signs will be considered incidental to the measurement of the quantity of signs.

Work zone signs (portable) will be measured and paid for as the actual number of square feet satisfactorily installed and accepted by the Engineer. Payment will be made for the initial installation only. Relocation of signs will be considered incidental to the measurement of the quantity of signs.

No direct payment will be made for portable work zone sign stands. All portable work zone sign stands will be incidental to the work of providing work zone signs.

Flashing arrow board will be measured and paid for as the maximum number of boards that have been satisfactorily placed and accepted by the Engineer in use at any one time during the life of the project as required by the contract. Relocation, repair, replacement and maintenance of arrow boards is considered incidental to the work of this section of the Project Special Provisions.

Portable changeable message signs will be measured and paid for as the maximum number of portable changeable message signs acceptably placed and in operation, at any one time during the life of the project. Payment for portable changeable message signs will be made on the following schedule:

70% of the unit bid upon placing the unit in service.

20% of the unit bid when the project is 50% complete.

10% of the unit bid when the project is 100% complete.

Relocation, replacement, repair and maintenance of portable changeable message signs is considered incidental to the work of this section of the Project Special Provisions.

Drums will be measured and paid for as the maximum number of drums acceptably placed and in use at any one time during the life of the project. Relocation, repair, replacement and maintenance of cones will be incidental to the work of this section of the Project Special Provisions.

Cones will be measured and paid for as the maximum number of cones acceptably placed and in use at any one time during the life of the project. Relocation, repair, replacement and maintenance of cones will be incidental to the work of this section of the Project Special Provisions.

Barricades (Type III) will be measured and paid for as the maximum number of linear feet of barricades acceptably placed and in use at any one time during the life of the project. Measurement will be made of the total length of each barricade along one rail. Relocation, repair, replacement and maintenance of barricades will be incidental to the work of this section of the Project Special Provisions.

Flagger will be measured and paid for as the actual number of hours that each flagger is satisfactorily provided and accepted by the Engineer during the life of the project. Flagging conducted for the convenience of the Contractor's operations is not compensated. The Department will pay for flaggers, including those used at Y-lines that are used in conjunction with a lane closure. Flaggers used for operations not involving a lane closure will be incidental to that operation and no payment will be made. Flaggers used for hauling operations, where the only need for a lane closure is due to the hauling operation, will be incidental to that operation and no payment will be made. Any flagger used for less than one hour will be incidental to that operation.

TMA will be measured and paid for as the maximum number of TMAs acceptably placed and in use at any one time during the life of the project for all operations other than moving and mobile operations. TMAs will be incidental to all moving and mobile operations. In the case of emergency situations, TMAs will not be paid for when payment has already been made for a stationary unit. Relocation of TMAs will be incidental to the measurement of the quantities of TMAs and no separate payment will be made.

Skinny drum will be measured and paid for as the actual number of skinny drums satisfactorily placed, accepted by the Engineer and in use at any one time during the life of the project. Relocation, repair, replacement and maintenance of skinny drums is considered incidental to the work of this section of the Project Special Provisions.

Law enforcement will be measured and paid for as the actual number of hours that each law enforcement officer is provided during the life of the project as approved by the Engineer and subject to the following conditions:

- Measurement and payment will not exceed 3 hours per police officer provided to direct traffic at a given signalized intersection during the removal and replacement of a controller cabinet.
- Measurement and payment will not exceed 1 hour per police officer provided to direct traffic at a given signalized intersection while constructing a new conduit entrance into an existing cabinet foundation, overlaying an existing cabinet foundation with a new preformed foundation or replacing an existing foundation with a new preformed foundation in the same location.

There will be no direct payment for marked law enforcement vehicles as they are considered incidental to the pay item.

No measurement will be made of orange plastic mesh construction fencing or other approved methods of protecting open excavations/hazards from pedestrian intrusion as such measures will be considered incidental to the excavation work.

If the Contractor fails to maintain acceptable traffic control measures or temporary traffic control devices and the Engineer implements measures necessary to provide the appropriate level of traffic control, the actual cost of performing said work will be deducted from the monies due the Contractor on the contract.

Payment will be made under:

Work Zones Signs (Barricade Mounted) ..... Square Foot
Work Zones Signs (Portable) ..... Square Foot
Flashing Arrow Board ..... Each
Portable Changeable Message Sign ..... Each
Drums ..... Each
Cones ..... Each
Barricades (Type III) ..... Linear Foot
Flagger ..... Hour
TMA ..... Each
Skinny Drum ..... Each
Law Enforcement ..... Hour

STANDARD SPECIAL PROVISION
AVAILABILITY OF FUNDS – TERMINATION OF CONTRACTS

(5-20-08) Z-2

General Statute 143C-6-11. (h) Highway Appropriation is hereby incorporated verbatim in this contract as follows:

(h) Amounts Encumbered. – Transportation project appropriations may be encumbered in the amount of allotments made to the Department of Transportation by the Director for the estimated payments for transportation project contract work to be performed in the appropriation fiscal year. The allotments shall be multiyear allotments and shall be based on estimated revenues and shall be subject to the maximum contract authority contained in *General Statute 143C-6-11(c)*. Payment for transportation project work performed pursuant to contract in any fiscal year other than the current fiscal year is subject to appropriations by the General Assembly. Transportation project contracts shall contain a schedule of estimated completion progress, and any acceleration of this progress shall be subject to the approval of the Department of Transportation provided funds are available. The State reserves the right to terminate or suspend any transportation project contract, and any transportation project contract shall be so terminated or suspended if funds will not be available for payment of the work to be performed during that fiscal year pursuant to the contract. In the event of termination of any contract, the contractor shall be given a written notice of termination at least 60 days before completion of scheduled work for which funds are available. In the event of termination, the contractor shall be paid for the work already performed in accordance with the contract specifications.

Payment will be made on any contract terminated pursuant to the special provision in accordance with Subarticle 108-13(E) of the *2012 Standard Specifications*.

STANDARD SPECIAL PROVISION

ERRATA

(1-17-12) (Rev. 10-15-13) Z-4

Revise the *2012 Standard Specifications* as follows:

Division 2

Page 2-7, line 31, Article 215-2 Construction Methods, replace "Article 107-26" with "Article 107-25".

Page 2-17, Article 226-3, Measurement and Payment, line 2, delete "pipe culverts,".

Page 2-20, Subarticle 230-4(B), Contractor Furnished Sources, change references as follows: Line 1, replace "(4) Buffer Zone" with "(c) Buffer Zone"; **Line 12,** replace "(5) Evaluation for Potential Wetlands and Endangered Species" with "(d) Evaluation for Potential Wetlands and Endangered Species"; and **Line 33,** replace "(6) Approval" with "(4) Approval".

Division 4

Page 4-77, line 27, Subarticle 452-3(C) Concrete Coping, replace "sheet pile" with "reinforcement".

Division 6

Page 6-7, line 31, Article 609-3 Field Verification of Mixture and Job Mix Formula Adjustments, replace "30" with "45".

Page 6-10, line 42, Subarticle 609-6(C)(2), replace "Subarticle 609-6(E)" with "Subarticle 609-6(D)".

Page 6-11, Table 609-1 Control Limits, replace "Max. Spec. Limit" for the Target Source of $P_{0.075}/P_{be}$ Ratio with "1.0".

Page 6-40, Article 650-2 Materials, replace "Subarticle 1012-1(F)" with "Subarticle 1012-1(E)"

Division 8

Page 8-23, line 10, Article 838-2 Materials, replace "Portland Cement Concrete, Class B" with "Portland Cement Concrete, Class A".

Division 10

Page 10-74, Table 1056-1 Geotextile Requirements, replace "50%" for the UV Stability (Retained Strength) of Type 5 geotextiles with "70%".

Division 12

Page 12-7, Table 1205-3, add "FOR THERMOPLASTIC" to the end of the title.

Page 12-8, Subarticle 1205-5(B), line 13, replace "Table 1205-2" with "Table 1205-4".

Page 12-8, Table 1205-4 and 1205-5, replace "THERMOPLASTIC" in the title of these tables with "POLYUREA".

Page 12-9, Subarticle 1205-6(B), line 21, replace "Table 1205-4" with "Table 1205-6".

Page 12-11, Subarticle 1205-8(C), line 25, replace "Table 1205-5" with "Table 1205-7".

Division 15

Page 15-4, Subarticle 1505-3(F) Backfilling, line 26, replace "Subarticle 235-4(C)" with "Subarticle 235-3(C)".

Page 15-6, Subarticle 1510-3(B), after line 21, replace the allowable leakage formula with the following: $\boldsymbol{W = LD\sqrt{P} \div 148{,}000}$

Page 15-6, Subarticle 1510-3(B), line 32, delete "may be performed concurrently or" and replace with "shall be performed".

Page 15-17, Subarticle 1540-3(E), line 27, delete "Type 1".

Division 17

Page 17-26, line 42, Subarticle 1731-3(D) Termination and Splicing within Interconnect Center, delete this subarticle.

Revise the *2012 Roadway Standard Drawings* as follows:

1633.01 Sheet 1 of 1, English Standard Drawing for Matting Installation, replace "1633.01" with "1631.01".

STANDARD SPECIAL PROVISION

PLANT AND PEST QUARANTINES
(Imported Fire Ant, Gypsy Moth, Witchweed, And Other Noxious Weeds)

(3-18-03) (Rev. 10-13-15) Z-04a

Within Quarantined Area

This project may be within a county regulated for plant and/or pests. If the project or any part of the Contractor's operations is located within a quarantined area, thoroughly clean all equipment prior to moving out of the quarantined area. Comply with federal/state regulations by obtaining a certificate or limited permit for any regulated article moving from the quarantined area.

Originating in a Quarantined County

Obtain a certificate or limited permit issued by the N.C. Department of Agriculture/United States Department of Agriculture. Have the certificate or limited permit accompany the article when it arrives at the project site.

Contact

Contact the N.C. Department of Agriculture/United States Department of Agriculture at 1-800-206-9333, 919-733-6932, or *http://www.ncagr.gov/plantind/* to determine those specific project sites located in the quarantined area or for any regulated article used on this project originating in a quarantined county.

Regulated Articles Include

1. Soil, sand, gravel, compost, peat, humus, muck, and decomposed manure, separately or with other articles. This includes movement of articles listed above that may be associated with cut/waste, ditch pulling, and shoulder cutting.
2. Plants with roots including grass sod.
3. Plant crowns and roots.
4. Bulbs, corms, rhizomes, and tubers of ornamental plants.
5. Hay, straw, fodder, and plant litter of any kind.
6. Clearing and grubbing debris.
7. Used agricultural cultivating and harvesting equipment.
8. Used earth-moving equipment.
9. Any other products, articles, or means of conveyance, of any character, if determined by an inspector to present a hazard of spreading imported fire ant, gypsy moth, witchweed or other noxious weeds.

STANDARD SPECIAL PROVISION

AWARD OF CONTRACT

(6-28-77) Z-6

"The North Carolina Department of Transportation, in accordance with the provisions of *Title VI of the Civil Rights Act of 1964* (78 Stat. 252) and the Regulations of the Department of Transportation (*49 C.F.R., Part 21*), issued pursuant to such act, hereby notifies all bidders that it will affirmatively insure that the contract entered into pursuant to this advertisement will be awarded to the lowest responsible bidder without discrimination on the ground of race, color, or national origin".

STANDARD SPECIAL PROVISION

MINORITY AND FEMALE EMPLOYMENT REQUIREMENTS

Z-7

NOTICE OF REQUIREMENTS FOR AFFIRMATIVE ACTION TO ENSURE EQUAL EMPLOYMENT OPPORTUNITY (*EXECUTIVE NUMBER 11246*)

1. The goals and timetables for minority and female participation, expressed in percentage terms for the Contractor's aggregate workforce in each trade on all construction work in the covered area, see as shown on the attached sheet entitled "Employment Goals for Minority and Female participation".

These goals are applicable to all the Contractor's construction work (whether or not it is Federal or federally assisted) performed in the covered area. If the Contractor performs construction work in a geographical area located outside of the covered area, it shall apply the goals established for such geographical area where the work is actually performed. With regard to this second area, the Contractor also is subject to the goals for both its federally involved and nonfederally involved construction.

The Contractor's compliance with the Executive Order and the regulations in *41 CFR Part 60-4* shall be based on its implementation of the Equal Opportunity Clause, specific affirmative action obligations required by the specifications set forth in *41 CFR 60-4.3(a)*, and its effort to meet the goals. The hours of minority and female employment and training must be substantially uniform throughout the length of the contract, and in each trade and the Contractor shall make a good faith effort to employ minorities and women evenly on each of its projects. The transfer of minority or female employees or trainees from Contractor to Contractor or from project to project or the sole purpose of meeting the Contractor's goals shall be a violation of the contract, the executive Order and the regulations *in 41 CFR Part 60-4*. Compliance with the goals will be measured against the total work hours performed.

2. As used in this Notice and in the contract resulting from this solicitation, the "covered area" is the county or counties shown on the cover sheet of the proposal form and contract.

EMPLOYMENT GOALS FOR MINORITY AND FEMALE PARTICIPATION

Economic Areas

Area 023 29.7%
Bertie County
Camden County
Chowan County
Gates County
Hertford County
Pasquotank County
Perquimans County

Area 024 31.7%
Beaufort County
Carteret County
Craven County
Dare County
Edgecombe County
Green County
Halifax County
Hyde County
Jones County
Lenoir County
Martin County
Nash County
Northampton County
Pamlico County
Pitt County
Tyrrell County
Washington County
Wayne County
Wilson County

Area 025 23.5%
Columbus County
Duplin County
Onslow County
Pender County

Area 026 33.5%
Bladen County
Hoke County
Richmond County
Robeson County
Sampson County
Scotland County

Area 027 24.7%
Chatham County
Franklin County
Granville County
Harnett County
Johnston County
Lee County
Person County
Vance County
Warren County

Area 028 15.5%
Alleghany County
Ashe County
Caswell County
Davie County
Montgomery County
Moore County
Rockingham County
Surry County
Watauga County
Wilkes County

Area 029 15.7%
Alexander County
Anson County
Burke County
Cabarrus County
Caldwell County
Catawba County
Cleveland County
Iredell County
Lincoln County
Polk County
Rowan County
Rutherford County
Stanly County

Area 0480 8.5%
Buncombe County
Madison County

Area 030 6.3%
Avery County
Cherokee County
Clay County
Graham County
Haywood County
Henderson County
Jackson County
McDowell County
Macon County
Mitchell County
Swain County
Transylvania County
Yancey County

SMSA Areas

Area 5720 26.6%
Currituck County

Area 9200 20.7%
Brunswick County
New Hanover County

Area 2560 24.2%
Cumberland County

Area 6640 22.8%
Durham County
Orange County
Wake County

Area 1300 16.2%
Alamance County

Area 3120 16.4%
Davidson County
Forsyth County
Guilford County
Randolph County
Stokes County
Yadkin County

Area 1520 18.3%
Gaston County
Mecklenburg County
Union County

Goals for Female

Participation in Each Trade

(Statewide) 6.9%

STANDARD SPECIAL PROVISION

REQUIRED CONTRACT PROVISIONS FEDERAL - AID CONSTRUCTION CONTRACTS

FHWA - 1273 Electronic Version - May 1, 2012 Z-8

I. General
II. Nondiscrimination
III. Nonsegregated Facilities
IV. Davis-Bacon and Related Act Provisions
V. Contract Work Hours and Safety Standards Act Provisions
VI. Subletting or Assigning the Contract
VII. Safety: Accident Prevention
VIII. False Statements Concerning Highway Projects
IX. Implementation of Clean Air Act and Federal Water Pollution Control Act
X. Compliance with Governmentwide Suspension and Debarment Requirements
XI. Certification Regarding Use of Contract Funds for Lobbying

ATTACHMENTS

A. Employment and Materials Preference for Appalachian Development Highway System or Appalachian Local Access Road Contracts (included in Appalachian contracts only)

I. GENERAL

1. Form FHWA-1273 must be physically incorporated in each construction contract funded under Title 23 (excluding emergency contracts solely intended for debris removal). The contractor (or subcontractor) must insert this form in each subcontract and further require its inclusion in all lower tier subcontracts (excluding purchase orders, rental agreements and other agreements for supplies or services).

   The applicable requirements of Form FHWA-1273 are incorporated by reference for work done under any purchase order, rental agreement or agreement for other services. The prime contractor shall be responsible for compliance by any subcontractor, lower-tier subcontractor or service provider.

   Form FHWA-1273 must be included in all Federal-aid design-build contracts, in all subcontracts and in lower tier subcontracts (excluding subcontracts for design services, purchase orders, rental agreements and other agreements for supplies or services). The design-builder shall be responsible for compliance by any subcontractor, lower-tier subcontractor or service provider.

   Contracting agencies may reference Form FHWA-1273 in bid proposal or request for proposal documents, however, the Form FHWA-1273 must be physically incorporated (not referenced) in all contracts, subcontracts and lower-tier subcontracts (excluding purchase orders, rental agreements and other agreements for supplies or services related to a construction contract).
2. Subject to the applicability criteria noted in the following sections, these contract provisions shall apply to all work performed on the contract by the contractor's own organization and with the assistance of workers under the contractor's immediate superintendence and to all work performed on the contract by piecework, station work, or by subcontract.
3. A breach of any of the stipulations contained in these Required Contract Provisions may be sufficient grounds for withholding of progress payments, withholding of final payment, termination of the contract, suspension / debarment or any other action determined to be appropriate by the contracting agency and FHWA.
4. Selection of Labor: During the performance of this contract, the contractor shall not use convict labor for any purpose within the limits of a construction project on a Federal-aid highway unless it is labor performed by convicts who are on parole, supervised release, or probation. The term Federal-aid highway does not include roadways functionally classified as local roads or rural minor collectors.

II. NONDISCRIMINATION

The provisions of this section related to 23 CFR Part 230 are applicable to all Federal-aid construction contracts and to all related construction subcontracts of $10,000 or more. The provisions of 23 CFR Part 230 are not applicable to material supply, engineering, or architectural service contracts.

In addition, the contractor and all subcontractors must comply with the following policies: Executive Order 11246, 41 CFR 60, 29 CFR 1625-1627, Title 23 USC Section 140, the Rehabilitation Act of 1973, as amended (29 USC 794), Title VI of the Civil Rights Act of 1964, as amended, and related regulations including 49 CFR Parts 21, 26 and 27; and 23 CFR Parts 200, 230, and 633.

The contractor and all subcontractors must comply with: the requirements of the Equal Opportunity Clause in 41 CFR 60-1.4(b) and, for all construction contracts exceeding $10,000, the Standard Federal Equal Employment Opportunity Construction Contract Specifications in 41 CFR 60-4.3.

Note: The U.S. Department of Labor has exclusive authority to determine compliance with Executive Order 11246 and the policies of the Secretary of Labor including 41 CFR 60, and 29 CFR 1625-1627. The contracting agency and the FHWA have the authority and the responsibility to ensure compliance with Title 23 USC Section 140, the Rehabilitation Act of 1973, as amended (29 USC 794), and Title VI of the Civil Rights Act of 1964, as amended, and related regulations including 49 CFR Parts 21, 26 and 27; and 23 CFR Parts 200, 230, and 633.

The following provision is adopted from 23 CFR 230, Appendix A, with appropriate revisions to conform to the U.S. Department of Labor (US DOL) and FHWA requirements.

1. **Equal Employment Opportunity:** Equal employment opportunity (EEO) requirements not to discriminate and to take affirmative action to assure equal opportunity as set forth under laws, executive orders, rules, regulations (28 CFR 35, 29 CFR 1630, 29 CFR 1625-1627, 41 CFR 60 and 49 CFR 27) and orders of the Secretary of Labor as modified by the provisions prescribed herein, and imposed pursuant to 23 U.S.C. 140 shall constitute the EEO and specific affirmative action standards for the contractor's project activities under this contract. The provisions of the Americans with Disabilities Act of 1990 (42 U.S.C. 12101 et seq.) set forth under 28 CFR 35 and 29 CFR 1630 are

incorporated by reference in this contract. In the execution of this contract, the contractor agrees to comply with the following minimum specific requirement activities of EEO:

a. The contractor will work with the contracting agency and the Federal Government to ensure that it has made every good faith effort to provide equal opportunity with respect to all of its terms and conditions of employment and in their review of activities under the contract.
b. The contractor will accept as its operating policy the following statement:
"It is the policy of this Company to assure that applicants are employed, and that employees are treated during employment, without regard to their race, religion, sex, color, national origin, age or disability. Such action shall include: employment, upgrading, demotion, or transfer; recruitment or recruitment advertising; layoff or termination; rates of pay or other forms of compensation; and selection for training, including apprenticeship, pre-apprenticeship, and/or on-the-job training."

2. **EEO Officer:** The contractor will designate and make known to the contracting officers an EEO Officer who will have the responsibility for and must be capable of effectively administering and promoting an active EEO program and who must be assigned adequate authority and responsibility to do so.
3. **Dissemination of Policy:** All members of the contractor's staff who are authorized to hire, supervise, promote, and discharge employees, or who recommend such action, or who are substantially involved in such action, will be made fully cognizant of, and will implement, the contractor's EEO policy and contractual responsibilities to provide EEO in each grade and classification of employment. To ensure that the above agreement will be met, the following actions will be taken as a minimum:
   a. Periodic meetings of supervisory and personnel office employees will be conducted before the start of work and then not less often than once every six months, at which time the contractor's EEO policy and its implementation will be reviewed and explained. The meetings will be conducted by the EEO Officer.
   b. All new supervisory or personnel office employees will be given a thorough indoctrination by the EEO Officer, covering all major aspects of the contractor's EEO obligations within thirty days following their reporting for duty with the contractor.
   c. All personnel who are engaged in direct recruitment for the project will be instructed by the EEO Officer in the contractor's procedures for locating and hiring minorities and women.
   d. Notices and posters setting forth the contractor's EEO policy will be placed in areas readily accessible to employees, applicants for employment and potential employees.
   e. The contractor's EEO policy and the procedures to implement such policy will be brought to the attention of employees by means of meetings, employee handbooks, or other appropriate means.
4. **Recruitment:** When advertising for employees, the contractor will include in all advertisements for employees the notation: "An Equal Opportunity Employer." All such advertisements will be placed in publications having a large circulation among minorities and women in the area from which the project work force would normally be derived.
   a. The contractor will, unless precluded by a valid bargaining agreement, conduct systematic and direct recruitment through public and private employee referral sources likely to yield qualified minorities and women. To meet this requirement, the contractor will identify sources of potential minority group employees, and establish with such identified sources procedures whereby minority and women applicants may be referred to the contractor for employment consideration.
   b. In the event the contractor has a valid bargaining agreement providing for exclusive hiring hall referrals, the contractor is expected to observe the provisions of that agreement to the extent that the system meets the contractor's compliance with EEO contract provisions. Where implementation of such an agreement has the effect of discriminating against minorities or women, or obligates the contractor to do the same, such implementation violates Federal nondiscrimination provisions.
   c. The contractor will encourage its present employees to refer minorities and women as applicants for employment. Information and procedures with regard to referring such applicants will be discussed with employees.
5. **Personnel Actions:** Wages, working conditions, and employee benefits shall be established and administered, and personnel actions of every type, including hiring, upgrading, promotion, transfer, demotion, layoff, and termination, shall be taken without regard to race, color, religion, sex, national origin, age or disability. The following procedures shall be followed:
   a. The contractor will conduct periodic inspections of project sites to insure that working conditions and employee facilities do not indicate discriminatory treatment of project site personnel.
   b. The contractor will periodically evaluate the spread of wages paid within each classification to determine any evidence of discriminatory wage practices.
   c. The contractor will periodically review selected personnel actions in depth to determine whether there is evidence of discrimination. Where evidence is found, the contractor will promptly take corrective action. If the review indicates that the discrimination may extend beyond the actions reviewed, such corrective action shall include all affected persons.
   d. The contractor will promptly investigate all complaints of alleged discrimination made to the contractor in connection with its obligations under this contract, will attempt to resolve such complaints, and will take appropriate corrective action within a reasonable time. If the investigation indicates that the discrimination may affect persons other than the complainant, such corrective action shall include such other persons. Upon completion of each investigation, the contractor will inform every complainant of all of their avenues of appeal.
6. **Training and Promotion:**
   a. The contractor will assist in locating, qualifying, and increasing the skills of minorities and women who are applicants for employment or current employees. Such efforts should be aimed at developing full journey level status employees in the type of trade or job classification involved.
   b. Consistent with the contractor's work force requirements and as permissible under Federal and State regulations, the contractor shall make full use of training programs, i.e., apprenticeship, and on-the-job training programs for the geographical area of contract performance. In the event a special provision for training is provided under this contract, this subparagraph will be superseded as indicated in the special provision. The contracting agency may reserve training positions for persons who receive welfare assistance in accordance with 23 U.S.C. 140(a).
   c The contractor will advise employees and applicants for employment of available training programs and entrance requirements for each.
   d. The contractor will periodically review the training and promotion potential of employees who are minorities and women and will encourage eligible employees to apply for such training and promotion.

7. **Unions:** If the contractor relies in whole or in part upon unions as a source of employees, the contractor will use good faith efforts to obtain the cooperation of such unions to increase opportunities for minorities and women. Actions by the contractor, either directly or through a contractor's association acting as agent, will include the procedures set forth below:
   a. The contractor will use good faith efforts to develop, in cooperation with the unions, joint training programs aimed toward qualifying more minorities and women for membership in the unions and increasing the skills of minorities and women so that they may qualify for higher paying employment.
   b. The contractor will use good faith efforts to incorporate an EEO clause into each union agreement to the end that such union will be contractually bound to refer applicants without regard to their race, color, religion, sex, national origin, age or disability.
   c. The contractor is to obtain information as to the referral practices and policies of the labor union except that to the extent such information is within the exclusive possession of the labor union and such labor union refuses to furnish such information to the contractor, the contractor shall so certify to the contracting agency and shall set forth what efforts have been made to obtain such information.
   d. In the event the union is unable to provide the contractor with a reasonable flow of referrals within the time limit set forth in the collective bargaining agreement, the contractor will, through independent recruitment efforts, fill the employment vacancies without regard to race, color, religion, sex, national origin, age or disability; making full efforts to obtain qualified and/or qualifiable minorities and women. The failure of a union to provide sufficient referrals (even though it is obligated to provide exclusive referrals under the terms of a collective bargaining agreement) does not relieve the contractor from the requirements of this paragraph. In the event the union referral practice prevents the contractor from meeting the obligations pursuant to Executive Order 11246, as amended, and these special provisions, such contractor shall immediately notify the contracting agency.
8. **Reasonable Accommodation for Applicants / Employees with Disabilities:** The contractor must be familiar with the requirements for and comply with the Americans with Disabilities Act and all rules and regulations established there under. Employers must provide reasonable accommodation in all employment activities unless to do so would cause an undue hardship.
9. **Selection of Subcontractors, Procurement of Materials and Leasing of Equipment:** The contractor shall not discriminate on the grounds of race, color, religion, sex, national origin, age or disability in the selection and retention of subcontractors, including procurement of materials and leases of equipment. The contractor shall take all necessary and reasonable steps to ensure nondiscrimination in the administration of this contract.
   a. The contractor shall notify all potential subcontractors and suppliers and lessors of their EEO obligations under this contract.
   b. The contractor will use good faith efforts to ensure subcontractor compliance with their EEO obligations.
10. **Assurance Required by 49 CFR 26.13(b):**
   a. The requirements of 49 CFR Part 26 and the State DOT's U.S. DOT-approved DBE program are incorporated by reference.
   b. The contractor or subcontractor shall not discriminate on the basis of race, color, national origin, or sex in the performance of this contract. The contractor shall carry out applicable requirements of 49 CFR Part 26 in the award and administration of DOT-assisted contracts. Failure by the contractor to carry out these requirements is a material breach of this contract, which may result in the termination of this contract or such other remedy as the contracting agency deems appropriate.
11. **Records and Reports:** The contractor shall keep such records as necessary to document compliance with the EEO requirements. Such records shall be retained for a period of three years following the date of the final payment to the contractor for all contract work and shall be available at reasonable times and places for inspection by authorized representatives of the contracting agency and the FHWA.
   a. The records kept by the contractor shall document the following:
      (1) The number and work hours of minority and non-minority group members and women employed in each work classification on the project;
      (2) The progress and efforts being made in cooperation with unions, when applicable, to increase employment opportunities for minorities and women; and
      (3) The progress and efforts being made in locating, hiring, training, qualifying, and upgrading minorities and women;
   b. The contractors and subcontractors will submit an annual report to the contracting agency each July for the duration of the project, indicating the number of minority, women, and non-minority group employees currently engaged in each work classification required by the contract work. This information is to be reported on Form FHWA-1391. The staffing data should represent the project work force on board in all or any part of the last payroll period preceding the end of July. If on-the-job training is being required by special provision, the contractor will be required to collect and report training data. The employment data should reflect the work force on board during all or any part of the last payroll period preceding the end of July.

III. NONSEGREGATED FACILITIES

This provision is applicable to all Federal-aid construction contracts and to all related construction subcontracts of $10,000 or more.

The contractor must ensure that facilities provided for employees are provided in such a manner that segregation on the basis of race, color, religion, sex, or national origin cannot result. The contractor may neither require such segregated use by written or oral policies nor tolerate such use by employee custom. The contractor's obligation extends further to ensure that its employees are not assigned to perform their services at any location, under the contractor's control, where the facilities are segregated. The term "facilities" includes waiting rooms, work areas, restaurants and other eating areas, time clocks, restrooms, washrooms, locker rooms, and other storage or dressing areas, parking lots, drinking fountains, recreation or entertainment areas, transportation, and housing provided for employees. The contractor shall provide separate or single-user restrooms and necessary dressing or sleeping areas to assure privacy between sexes.

IV. DAVIS-BACON AND RELATED ACT PROVISIONS

This section is applicable to all Federal-aid construction projects exceeding $2,000 and to all related subcontracts and lower-tier subcontracts (regardless of subcontract size). The requirements apply to all projects located within the right-of-way of a roadway that is functionally classified as Federal-aid highway. This excludes roadways functionally classified as local roads or rural minor collectors, which are exempt. Contracting agencies may elect to apply these requirements to other projects.

The following provisions are from the U.S. Department of Labor regulations in 29 CFR 5.5 "Contract provisions and related matters" with minor revisions to conform to the FHWA-1273 format and FHWA program requirements.

1. **Minimum wages**
   a. All laborers and mechanics employed or working upon the site of the work, will be paid unconditionally and not less often than once a week, and without subsequent deduction or rebate on any account (except such payroll deductions as are permitted by regulations issued by the

Secretary of Labor under the Copeland Act (29 CFR part 3)), the full amount of wages and bona fide fringe benefits (or cash equivalents thereof) due at time of payment computed at rates not less than those contained in the wage determination of the Secretary of Labor which is attached hereto and made a part hereof, regardless of any contractual relationship which may be alleged to exist between the contractor and such laborers and mechanics.

Contributions made or costs reasonably anticipated for bona fide fringe benefits under section 1(b)(2) of the Davis-Bacon Act on behalf of laborers or mechanics are considered wages paid to such laborers or mechanics, subject to the provisions of paragraph 1.d. of this section; also, regular contributions made or costs incurred for more than a weekly period (but not less often than quarterly) under plans, funds, or programs which cover the particular weekly period, are deemed to be constructively made or incurred during such weekly period. Such laborers and mechanics shall be paid the appropriate wage rate and fringe benefits on the wage determination for the classification of work actually performed, without regard to skill, except as provided in 29 CFR 5.5(a)(4). Laborers or mechanics performing work in more than one classification may be compensated at the rate specified for each classification for the time actually worked therein: Provided, That the employer's payroll records accurately set forth the time spent in each classification in which work is performed. The wage determination (including any additional classification and wage rates conformed under paragraph 1.b. of this section) and the Davis-Bacon poster (WH–1321) shall be posted at all times by the contractor and its subcontractors at the site of the work in a prominent and accessible place where it can be easily seen by the workers.

b. (1) The contracting officer shall require that any class of laborers or mechanics, including helpers, which is not listed in the wage determination and which is to be employed under the contract shall be classified in conformance with the wage determination. The contracting officer shall approve an additional classification and wage rate and fringe benefits therefore only when the following criteria have been met:

(i) The work to be performed by the classification requested is not performed by a classification in the wage determination; and

(ii) The classification is utilized in the area by the construction industry; and

(iii) The proposed wage rate, including any bona fide fringe benefits, bears a reasonable relationship to the wage rates contained in the wage determination.

(2) If the contractor and the laborers and mechanics to be employed in the classification (if known), or their representatives, and the contracting officer agree on the classification and wage rate (including the amount designated for fringe benefits where appropriate), a report of the action taken shall be sent by the contracting officer to the Administrator of the Wage and Hour Division, Employment Standards Administration, U.S. Department of Labor, Washington, DC 20210. The Administrator, or an authorized representative, will approve, modify, or disapprove every additional classification action within 30 days of receipt and so advise the contracting officer or will notify the contracting officer within the 30-day period that additional time is necessary.

(3) In the event the contractor, the laborers or mechanics to be employed in the classification or their representatives, and the contracting officer do not agree on the proposed classification and wage rate (including the amount designated for fringe benefits, where appropriate), the contracting officer shall refer the questions, including the views of all interested parties and the recommendation of the contracting officer, to the Wage and Hour Administrator for determination. The Wage and Hour Administrator, or an authorized representative, will issue a determination within 30 days of receipt and so advise the contracting officer or will notify the contracting officer within the 30-day period that additional time is necessary.

(4) The wage rate (including fringe benefits where appropriate) determined pursuant to paragraphs 1.b.(2) or 1.b.(3) of this section, shall be paid to all workers performing work in the classification under this contract from the first day on which work is performed in the classification.

c. Whenever the minimum wage rate prescribed in the contract for a class of laborers or mechanics includes a fringe benefit which is not expressed as an hourly rate, the contractor shall either pay the benefit as stated in the wage determination or shall pay another bona fide fringe benefit or an hourly cash equivalent thereof.

d. If the contractor does not make payments to a trustee or other third person, the contractor may consider as part of the wages of any laborer or mechanic the amount of any costs reasonably anticipated in providing bona fide fringe benefits under a plan or program, Provided, That the Secretary of Labor has found, upon the written request of the contractor, that the applicable standards of the Davis-Bacon Act have been met. The Secretary of Labor may require the contractor to set aside in a separate account assets for the meeting of obligations under the plan or program.

2. **Withholding.** The contracting agency shall upon its own action or upon written request of an authorized representative of the Department of Labor, withhold or cause to be withheld from the contractor under this contract, or any other Federal contract with the same prime contractor, or any other federally-assisted contract subject to Davis-Bacon prevailing wage requirements, which is held by the same prime contractor, so much of the accrued payments or advances as may be considered necessary to pay laborers and mechanics, including apprentices, trainees, and helpers, employed by the contractor or any subcontractor the full amount of wages required by the contract. In the event of failure to pay any laborer or mechanic, including any apprentice, trainee, or helper, employed or working on the site of the work, all or part of the wages required by the contract, the contracting agency may, after written notice to the contractor, take such action as may be necessary to cause the suspension of any further payment, advance, or guarantee of funds until such violations have ceased.

3. **Payrolls and basic records**

a. Payrolls and basic records relating thereto shall be maintained by the contractor during the course of the work and preserved for a period of three years thereafter for all laborers and mechanics working at the site of the work. Such records shall contain the name, address, and social security number of each such worker, his or her correct classification, hourly rates of wages paid (including rates of contributions or costs anticipated for bona fide fringe benefits or cash equivalents thereof of the types described in section 1(b)(2)(B) of the Davis-Bacon Act), daily and weekly number of hours worked, deductions made and actual wages paid. Whenever the Secretary of Labor has found under 29 CFR 5.5(a)(1)(iv) that the wages of any laborer or mechanic include the amount of any costs reasonably anticipated in providing benefits under a plan or program described in section 1(b)(2)(B) of the Davis-Bacon Act, the contractor shall maintain records which show that the commitment to provide such benefits is enforceable, that the plan or program is financially responsible, and that the plan or program has been communicated in writing to the laborers or mechanics affected, and records which show the costs anticipated or the actual cost incurred in providing such benefits. Contractors employing apprentices or trainees under approved programs shall maintain written evidence of the registration of apprenticeship programs and certification of trainee programs, the registration of the apprentices and trainees, and the ratios and wage rates prescribed in the applicable programs.

b. (1) The contractor shall submit weekly for each week in which any contract work is performed a copy of all payrolls to the contracting agency. The payrolls submitted shall set out accurately and completely all of the information required to be maintained under 29 CFR 5.5(a)(3)(i), except that full social security numbers and home addresses shall not be included on weekly transmittals. Instead the

payrolls shall only need to include an individually identifying number for each employee (e.g. , the last four digits of the employee's social security number). The required weekly payroll information may be submitted in any form desired. Optional Form WH–347 is available for this purpose from the Wage and Hour Division Web site at http://www.dol.gov/esa/whd/forms/ wh347instr.htm or its successor site. The prime contractor is responsible for the submission of copies of payrolls by all subcontractors. Contractors and subcontractors shall maintain the full social security number and current address of each covered worker, and shall provide them upon request to the contracting agency for transmission to the State DOT, the FHWA or the Wage and Hour Division of the Department of Labor for purposes of an investigation or audit of compliance with prevailing wage requirements. It is not a violation of this section for a prime contractor to require a subcontractor to provide addresses and social security numbers to the prime contractor for its own records, without weekly submission to the contracting agency.

(2) Each payroll submitted shall be accompanied by a "Statement of Compliance," signed by the contractor or subcontractor or his or her agent who pays or supervises the payment of the persons employed under the contract and shall certify the following:

(i) That the payroll for the payroll period contains the information required to be provided under §5.5 (a)(3)(ii) of Regulations, 29 CFR part 5, the appropriate information is being maintained under §5.5 (a)(3)(i) of Regulations, 29 CFR part 5, and that such information is correct and complete;

(ii) That each laborer or mechanic (including each helper, apprentice, and trainee) employed on the contract during the payroll period has been paid the full weekly wages earned, without rebate, either directly or indirectly, and that no deductions have been made either directly or indirectly from the full wages earned, other than permissible deductions as set forth in Regulations, 29 CFR part 3;

(iii) That each laborer or mechanic has been paid not less than the applicable wage rates and fringe benefits or cash equivalents for the classification of work performed, as specified in the applicable wage determination incorporated into the contract.

(3) The weekly submission of a properly executed certification set forth on the reverse side of Optional Form WH–347 shall satisfy the requirement for submission of the "Statement of Compliance" required by paragraph 3.b.(2) of this section.

(4) The falsification of any of the above certifications may subject the contractor or subcontractor to civil or criminal prosecution under section 1001 of title 18 and section 231 of title 31 of the United States Code.

c. The contractor or subcontractor shall make the records required under paragraph 3.a. of this section available for inspection, copying, or transcription by authorized representatives of the contracting agency, the State DOT, the FHWA, or the Department of Labor, and shall permit such representatives to interview employees during working hours on the job. If the contractor or subcontractor fails to submit the required records or to make them available, the FHWA may, after written notice to the contractor, the contracting agency or the State DOT, take such action as may be necessary to cause the suspension of any further payment, advance, or guarantee of funds. Furthermore, failure to submit the required records upon request or to make such records available may be grounds for debarment action pursuant to 29 CFR 5.12.

4. **Apprentices and trainees**

a. Apprentices (programs of the USDOL). Apprentices will be permitted to work at less than the predetermined rate for the work they performed when they are employed pursuant to and individually registered in a bona fide apprenticeship program registered with the U.S. Department of Labor, Employment and Training Administration, Office of Apprenticeship Training, Employer and Labor Services, or with a State Apprenticeship Agency recognized by the Office, or if a person is employed in his or her first 90 days of probationary employment as an apprentice in such an apprenticeship program, who is not individually registered in the program, but who has been certified by the Office of Apprenticeship Training, Employer and Labor Services or a State Apprenticeship Agency (where appropriate) to be eligible for probationary employment as an apprentice.

The allowable ratio of apprentices to journeymen on the job site in any craft classification shall not be greater than the ratio permitted to the contractor as to the entire work force under the registered program. Any worker listed on a payroll at an apprentice wage rate, who is not registered or otherwise employed as stated above, shall be paid not less than the applicable wage rate on the wage determination for the classification of work actually performed. In addition, any apprentice performing work on the job site in excess of the ratio permitted under the registered program shall be paid not less than the applicable wage rate on the wage determination for the work actually performed. Where a contractor is performing construction on a project in a locality other than that in which its program is registered, the ratios and wage rates (expressed in percentages of the journeyman's hourly rate) specified in the contractor's or subcontractor's registered program shall be observed.

Every apprentice must be paid at not less than the rate specified in the registered program for the apprentice's level of progress, expressed as a percentage of the journeymen hourly rate specified in the applicable wage determination. Apprentices shall be paid fringe benefits in accordance with the provisions of the apprenticeship program. If the apprenticeship program does not specify fringe benefits, apprentices must be paid the full amount of fringe benefits listed on the wage determination for the applicable classification. If the Administrator determines that a different practice prevails for the applicable apprentice classification, fringes shall be paid in accordance with that determination.

In the event the Office of Apprenticeship Training, Employer and Labor Services, or a State Apprenticeship Agency recognized by the Office, withdraws approval of an apprenticeship program, the contractor will no longer be permitted to utilize apprentices at less than the applicable predetermined rate for the work performed until an acceptable program is approved.

b. Trainees (programs of the USDOL). Except as provided in 29 CFR 5.16, trainees will not be permitted to work at less than the predetermined rate for the work performed unless they are employed pursuant to and individually registered in a program which has received prior approval, evidenced by formal certification by the U.S. Department of Labor, Employment and Training Administration.

The ratio of trainees to journeymen on the job site shall not be greater than permitted under the plan approved by the Employment and Training Administration.

Every trainee must be paid at not less than the rate specified in the approved program for the trainee's level of progress, expressed as a percentage of the journeyman hourly rate specified in the applicable wage determination. Trainees shall be paid fringe benefits in accordance with the provisions of the trainee program. If the trainee program does not mention fringe benefits, trainees shall be paid the full amount of fringe benefits listed on the wage determination unless the Administrator of the Wage and Hour Division determines that there is an apprenticeship program associated with the corresponding journeyman wage rate on the wage determination which provides for less than full fringe benefits for apprentices. Any employee listed on the payroll at a trainee rate who is not registered and participating in a training plan approved by the Employment and Training Administration shall be paid not less than the applicable wage rate on the wage determination for the classification of work actually performed. In addition, any trainee performing work on the job site in excess of the ratio permitted under the registered program shall be paid not less than the applicable wage rate on the wage determination for the work actually performed.

In the event the Employment and Training Administration withdraws approval of a training program, the contractor will no longer be permitted to utilize trainees at less than the applicable predetermined rate for the work performed until an acceptable program is approved.

c. Equal employment opportunity. The utilization of apprentices, trainees and journeymen under this part shall be in conformity with the equal employment opportunity requirements of Executive Order 11246, as amended, and 29 CFR part 30.

d. Apprentices and Trainees (programs of the U.S. DOT). Apprentices and trainees working under apprenticeship and skill training programs which have been certified by the Secretary of Transportation as promoting EEO in connection with Federal-aid highway construction programs are not subject to the requirements of paragraph 4 of this Section IV. The straight time hourly wage rates for apprentices and trainees under such programs will be established by the particular programs. The ratio of apprentices and trainees to journeymen shall not be greater than permitted by the terms of the particular program.

5. **Compliance with Copeland Act requirements.** The contractor shall comply with the requirements of 29 CFR part 3, which are incorporated by reference in this contract.
6. **Subcontracts.** The contractor or subcontractor shall insert Form FHWA-1273 in any subcontracts and also require the subcontractors to include Form FHWA-1273 in any lower tier subcontracts. The prime contractor shall be responsible for the compliance by any subcontractor or lower tier subcontractor with all the contract clauses in 29 CFR 5.5.
7. **Contract termination:** debarment. A breach of the contract clauses in 29 CFR 5.5 may be grounds for termination of the contract, and for debarment as a contractor and a subcontractor as provided in 29 CFR 5.12.
8. **Compliance with Davis-Bacon and Related Act requirements.** All rulings and interpretations of the Davis-Bacon and Related Acts contained in 29 CFR parts 1, 3, and 5 are herein incorporated by reference in this contract.
9. **Disputes concerning labor standards.** Disputes arising out of the labor standards provisions of this contract shall not be subject to the general disputes clause of this contract. Such disputes shall be resolved in accordance with the procedures of the Department of Labor set forth in 29 CFR parts 5, 6, and 7. Disputes within the meaning of this clause include disputes between the contractor (or any of its subcontractors) and the contracting agency, the U.S. Department of Labor, or the employees or their representatives.
10. **Certification of eligibility.**
    a. By entering into this contract, the contractor certifies that neither it (nor he or she) nor any person or firm who has an interest in the contractor's firm is a person or firm ineligible to be awarded Government contracts by virtue of section 3(a) of the Davis-Bacon Act or 29 CFR 5.12(a)(1).
    b. No part of this contract shall be subcontracted to any person or firm ineligible for award of a Government contract by virtue of section 3(a) of the Davis-Bacon Act or 29 CFR 5.12(a)(1).
    c. The penalty for making false statements is prescribed in the U.S. Criminal Code, 18 U.S.C. 1001.

V. CONTRACT WORK HOURS AND SAFETY STANDARDS ACT

The following clauses apply to any Federal-aid construction contract in an amount in excess of $100,000 and subject to the overtime provisions of the Contract Work Hours and Safety Standards Act. These clauses shall be inserted in addition to the clauses required by 29 CFR 5.5(a) or 29 CFR 4.6. As used in this paragraph, the terms laborers and mechanics include watchmen and guards.

1. **Overtime requirements.** No contractor or subcontractor contracting for any part of the contract work which may require or involve the employment of laborers or mechanics shall require or permit any such laborer or mechanic in any workweek in which he or she is employed on such work to work in excess of forty hours in such workweek unless such laborer or mechanic receives compensation at a rate not less than one and one-half times the basic rate of pay for all hours worked in excess of forty hours in such workweek.
2. **Violation; liability for unpaid wages; liquidated damages.** In the event of any violation of the clause set forth in paragraph (1.) of this section, the contractor and any subcontractor responsible therefor shall be liable for the unpaid wages. In addition, such contractor and subcontractor shall be liable to the United States (in the case of work done under contract for the District of Columbia or a territory, to such District or to such territory), for liquidated damages. Such liquidated damages shall be computed with respect to each individual laborer or mechanic, including watchmen and guards, employed in violation of the clause set forth in paragraph (1.) of this section, in the sum of $10 for each calendar day on which such individual was required or permitted to work in excess of the standard workweek of forty hours without payment of the overtime wages required by the clause set forth in paragraph (1.) of this section.
3. **Withholding for unpaid wages and liquidated damages.** The FHWA or the contacting agency shall upon its own action or upon written request of an authorized representative of the Department of Labor withhold or cause to be withheld, from any moneys payable on account of work performed by the contractor or subcontractor under any such contract or any other Federal contract with the same prime contractor, or any other federally-assisted contract subject to the Contract Work Hours and Safety Standards Act, which is held by the same prime contractor, such sums as may be determined to be necessary to satisfy any liabilities of such contractor or subcontractor for unpaid wages and liquidated damages as provided in the clause set forth in paragraph (2.) of this section.
4. **Subcontracts.** The contractor or subcontractor shall insert in any subcontracts the clauses set forth in paragraph (1.) through (4.) of this section and also a clause requiring the subcontractors to include these clauses in any lower tier subcontracts. The prime contractor shall be responsible for compliance by any subcontractor or lower tier subcontractor with the clauses set forth in paragraphs (1.) through (4.) of this section.

VI. SUBLETTING OR ASSIGNING THE CONTRACT

This provision is applicable to all Federal-aid construction contracts on the National Highway System.

1. The contractor shall perform with its own organization contract work amounting to not less than 30 percent (or a greater percentage if specified elsewhere in the contract) of the total original contract price, excluding any specialty items designated by the contracting agency. Specialty items may be performed by subcontract and the amount of any such specialty items performed may be deducted from the total original contract price before computing the amount of work required to be performed by the contractor's own organization (23 CFR 635.116).
    a. The term "perform work with its own organization" refers to workers employed or leased by the prime contractor, and equipment owned or rented by the prime contractor, with or without operators. Such term does not include employees or equipment of a subcontractor or lower tier subcontractor, agents of the prime contractor, or any other assignees. The term may include payments for the costs of hiring leased employees

from an employee leasing firm meeting all relevant Federal and State regulatory requirements. Leased employees may only be included in this term if the prime contractor meets all of the following conditions:
(1) the prime contractor maintains control over the supervision of the day-to-day activities of the leased employees;
(2) the prime contractor remains responsible for the quality of the work of the leased employees;
(3) the prime contractor retains all power to accept or exclude individual employees from work on the project; and
(4) the prime contractor remains ultimately responsible for the payment of predetermined minimum wages, the submission of payrolls, statements of compliance and all other Federal regulatory requirements.

b. "Specialty Items" shall be construed to be limited to work that requires highly specialized knowledge, abilities, or equipment not ordinarily available in the type of contracting organizations qualified and expected to bid or propose on the contract as a whole and in general are to be limited to minor components of the overall contract.

2. The contract amount upon which the requirements set forth in paragraph (1) of Section VI is computed includes the cost of material and manufactured products which are to be purchased or produced by the contractor under the contract provisions.
3. The contractor shall furnish (a) a competent superintendent or supervisor who is employed by the firm, has full authority to direct performance of the work in accordance with the contract requirements, and is in charge of all construction operations (regardless of who performs the work) and (b) such other of its own organizational resources (supervision, management, and engineering services) as the contracting officer determines is necessary to assure the performance of the contract.
4. No portion of the contract shall be sublet, assigned or otherwise disposed of except with the written consent of the contracting officer, or authorized representative, and such consent when given shall not be construed to relieve the contractor of any responsibility for the fulfillment of the contract. Written consent will be given only after the contracting agency has assured that each subcontract is evidenced in writing and that it contains all pertinent provisions and requirements of the prime contract.
5. The 30% self-performance requirement of paragraph (1) is not applicable to design-build contracts; however, contracting agencies may establish their own self-performance requirements.

VII. SAFETY: ACCIDENT PREVENTION

This provision is applicable to all Federal-aid construction contracts and to all related subcontracts.

1. In the performance of this contract the contractor shall comply with all applicable Federal, State, and local laws governing safety, health, and sanitation (23 CFR 635). The contractor shall provide all safeguards, safety devices and protective equipment and take any other needed actions as it determines, or as the contracting officer may determine, to be reasonably necessary to protect the life and health of employees on the job and the safety of the public and to protect property in connection with the performance of the work covered by the contract.
2. It is a condition of this contract, and shall be made a condition of each subcontract, which the contractor enters into pursuant to this contract, that the contractor and any subcontractor shall not permit any employee, in performance of the contract, to work in surroundings or under conditions which are unsanitary, hazardous or dangerous to his/her health or safety, as determined under construction safety and health standards (29 CFR 1926) promulgated by the Secretary of Labor, in accordance with Section 107 of the Contract Work Hours and Safety Standards Act (40 U.S.C. 3704).
3. Pursuant to 29 CFR 1926.3, it is a condition of this contract that the Secretary of Labor or authorized representative thereof, shall have right of entry to any site of contract performance to inspect or investigate the matter of compliance with the construction safety and health standards and to carry out the duties of the Secretary under Section 107 of the Contract Work Hours and Safety Standards Act (40 U.S.C.3704).

VIII. FALSE STATEMENTS CONCERNING HIGHWAY PROJECTS

This provision is applicable to all Federal-aid construction contracts and to all related subcontracts.

In order to assure high quality and durable construction in conformity with approved plans and specifications and a high degree of reliability on statements and representations made by engineers, contractors, suppliers, and workers on Federal-aid highway projects, it is essential that all persons concerned with the project perform their functions as carefully, thoroughly, and honestly as possible. Willful falsification, distortion, or misrepresentation with respect to any facts related to the project is a violation of Federal law. To prevent any misunderstanding regarding the seriousness of these and similar acts, Form FHWA-1022 shall be posted on each Federal-aid highway project (23 CFR 635) in one or more places where it is readily available to all persons concerned with the project:

18 U.S.C. 1020 reads as follows:

"Whoever, being an officer, agent, or employee of the United States, or of any State or Territory, or whoever, whether a person, association, firm, or corporation, knowingly makes any false statement, false representation, or false report as to the character, quality, quantity, or cost of the material used or to be used, or the quantity or quality of the work performed or to be performed, or the cost thereof in connection with the submission of plans, maps, specifications, contracts, or costs of construction on any highway or related project submitted for approval to the Secretary of Transportation; or

Whoever knowingly makes any false statement, false representation, false report or false claim with respect to the character, quality, quantity, or cost of any work performed or to be performed, or materials furnished or to be furnished, in connection with the construction of any highway or related project approved by the Secretary of Transportation; or

Whoever knowingly makes any false statement or false representation as to material fact in any statement, certificate, or report submitted pursuant to provisions of the Federal-aid Roads Act approved July 1, 1916, (39 Stat. 355), as amended and supplemented;

Shall be fined under this title or imprisoned not more than 5 years or both."

IX. IMPLEMENTATION OF CLEAN AIR ACT AND FEDERAL WATER POLLUTION CONTROL ACT

This provision is applicable to all Federal-aid construction contracts and to all related subcontracts.

By submission of this bid/proposal or the execution of this contract, or subcontract, as appropriate, the bidder, proposer, Federal-aid construction contractor, or subcontractor, as appropriate, will be deemed to have stipulated as follows:

1. That any person who is or will be utilized in the performance of this contract is not prohibited from receiving an award due to a violation of Section 508 of the Clean Water Act or Section 306 of the Clean Air Act.
2. That the contractor agrees to include or cause to be included the requirements of paragraph (1) of this Section X in every subcontract, and further agrees to take such action as the contracting agency may direct as a means of enforcing such requirements.

X. CERTIFICATION REGARDING DEBARMENT, SUSPENSION, INELIGIBILITY AND VOLUNTARY EXCLUSION

This provision is applicable to all Federal-aid construction contracts, design-build contracts, subcontracts, lower-tier subcontracts, purchase orders, lease agreements, consultant contracts or any other covered transaction requiring FHWA approval or that is estimated to cost $25,000 or more – as defined in 2 CFR Parts 180 and 1200.

1. **Instructions for Certification – First Tier Participants:**
   a. By signing and submitting this proposal, the prospective first tier participant is providing the certification set out below.
   b. The inability of a person to provide the certification set out below will not necessarily result in denial of participation in this covered transaction. The prospective first tier participant shall submit an explanation of why it cannot provide the certification set out below. The certification or explanation will be considered in connection with the department or agency's determination whether to enter into this transaction. However, failure of the prospective first tier participant to furnish a certification or an explanation shall disqualify such a person from participation in this transaction.
   c. The certification in this clause is a material representation of fact upon which reliance was placed when the contracting agency determined to enter into this transaction. If it is later determined that the prospective participant knowingly rendered an erroneous certification, in addition to other remedies available to the Federal Government, the contracting agency may terminate this transaction for cause of default.
   d. The prospective first tier participant shall provide immediate written notice to the contracting agency to whom this proposal is submitted if any time the prospective first tier participant learns that its certification was erroneous when submitted or has become erroneous by reason of changed circumstances.
   e. The terms "covered transaction," "debarred," "suspended," "ineligible," "participant," "person," "principal," and "voluntarily excluded," as used in this clause, are defined in 2 CFR Parts 180 and 1200. "First Tier Covered Transactions" refers to any covered transaction between a grantee or subgrantee of Federal funds and a participant (such as the prime or general contract). "Lower Tier Covered Transactions" refers to any covered transaction under a First Tier Covered Transaction (such as subcontracts). "First Tier Participant" refers to the participant who has entered into a covered transaction with a grantee or subgrantee of Federal funds (such as the prime or general contractor). "Lower Tier Participant" refers any participant who has entered into a covered transaction with a First Tier Participant or other Lower Tier Participants (such as subcontractors and suppliers).
   f. The prospective first tier participant agrees by submitting this proposal that, should the proposed covered transaction be entered into, it shall not knowingly enter into any lower tier covered transaction with a person who is debarred, suspended, declared ineligible, or voluntarily excluded from participation in this covered transaction, unless authorized by the department or agency entering into this transaction.
   g. The prospective first tier participant further agrees by submitting this proposal that it will include the clause titled "Certification Regarding Debarment, Suspension, Ineligibility and Voluntary Exclusion-Lower Tier Covered Transactions," provided by the department or contracting agency, entering into this covered transaction, without modification, in all lower tier covered transactions and in all solicitations for lower tier covered transactions exceeding the $25,000 threshold.
   h. A participant in a covered transaction may rely upon a certification of a prospective participant in a lower tier covered transaction that is not debarred, suspended, ineligible, or voluntarily excluded from the covered transaction, unless it knows that the certification is erroneous. A participant is responsible for ensuring that its principals are not suspended, debarred, or otherwise ineligible to participate in covered transactions. To verify the eligibility of its principals, as well as the eligibility of any lower tier prospective participants, each participant may, but is not required to, check the Excluded Parties List System website (https://www.epls.gov/), which is compiled by the General Services Administration.
   i. Nothing contained in the foregoing shall be construed to require the establishment of a system of records in order to render in good faith the certification required by this clause. The knowledge and information of the prospective participant is not required to exceed that which is normally possessed by a prudent person in the ordinary course of business dealings.
   j. Except for transactions authorized under paragraph (f) of these instructions, if a participant in a covered transaction knowingly enters into a lower tier covered transaction with a person who is suspended, debarred, ineligible, or voluntarily excluded from participation in this transaction, in addition to other remedies available to the Federal Government, the department or agency may terminate this transaction for cause or default.

* * * * *

2. **Certification Regarding Debarment, Suspension, Ineligibility and Voluntary Exclusion – First Tier Participants:**
   a. The prospective first tier participant certifies to the best of its knowledge and belief, that it and its principals:
      (1) Are not presently debarred, suspended, proposed for debarment, declared ineligible, or voluntarily excluded from participating in covered transactions by any Federal department or agency;
      (2) Have not within a three-year period preceding this proposal been convicted of or had a civil judgment rendered against them for commission of fraud or a criminal offense in connection with obtaining, attempting to obtain, or performing a public (Federal, State or local) transaction or contract under a public transaction; violation of Federal or State antitrust statutes or commission of embezzlement, theft, forgery, bribery, falsification or destruction of records, making false statements, or receiving stolen property;
      (3) Are not presently indicted for or otherwise criminally or civilly charged by a governmental entity (Federal, State or local) with commission of any of the offenses enumerated in paragraph (a)(2) of this certification; and
      (4) Have not within a three-year period preceding this application/proposal had one or more public transactions (Federal, State or local) terminated for cause or default.
   b. Where the prospective participant is unable to certify to any of the statements in this certification, such prospective participant shall attach an explanation to this proposal.
2. **Instructions for Certification - Lower Tier Participants:**
   (Applicable to all subcontracts, purchase orders and other lower tier transactions requiring prior FHWA approval or estimated to cost $25,000 or more - 2 CFR Parts 180 and 1200)
   a. By signing and submitting this proposal, the prospective lower tier is providing the certification set out below.
   b. The certification in this clause is a material representation of fact upon which reliance was placed when this transaction was entered into. If it is later determined that the prospective lower tier participant knowingly rendered an erroneous certification, in addition to other remedies available to the Federal Government, the department, or agency with which this transaction originated may pursue available remedies, including suspension and/or debarment.

c. The prospective lower tier participant shall provide immediate written notice to the person to which this proposal is submitted if at any time the prospective lower tier participant learns that its certification was erroneous by reason of changed circumstances.
d. The terms "covered transaction," "debarred," "suspended," "ineligible," "participant," "person," "principal," and "voluntarily excluded," as used in this clause, are defined in 2 CFR Parts 180 and 1200. You may contact the person to which this proposal is submitted for assistance in obtaining a copy of those regulations. "First Tier Covered Transactions" refers to any covered transaction between a grantee or subgrantee of Federal funds and a participant (such as the prime or general contract). "Lower Tier Covered Transactions" refers to any covered transaction under a First Tier Covered Transaction (such as subcontracts). "First Tier Participant" refers to the participant who has entered into a covered transaction with a grantee or subgrantee of Federal funds (such as the prime or general contractor). "Lower Tier Participant" refers any participant who has entered into a covered transaction with a First Tier Participant or other Lower Tier Participants (such as subcontractors and suppliers).
e. The prospective lower tier participant agrees by submitting this proposal that, should the proposed covered transaction be entered into, it shall not knowingly enter into any lower tier covered transaction with a person who is debarred, suspended, declared ineligible, or voluntarily excluded from participation in this covered transaction, unless authorized by the department or agency with which this transaction originated.
f. The prospective lower tier participant further agrees by submitting this proposal that it will include this clause titled "Certification Regarding Debarment, Suspension, Ineligibility and Voluntary Exclusion-Lower Tier Covered Transaction," without modification, in all lower tier covered transactions and in all solicitations for lower tier covered transactions exceeding the $25,000 threshold.
g. A participant in a covered transaction may rely upon a certification of a prospective participant in a lower tier covered transaction that is not debarred, suspended, ineligible, or voluntarily excluded from the covered transaction, unless it knows that the certification is erroneous. A participant is responsible for ensuring that its principals are not suspended, debarred, or otherwise ineligible to participate in covered transactions. To verify the eligibility of its principals, as well as the eligibility of any lower tier prospective participants, each participant may, but is not required to, check the Excluded Parties List System website (https://www.epls.gov/), which is compiled by the General Services Administration.
h. Nothing contained in the foregoing shall be construed to require establishment of a system of records in order to render in good faith the certification required by this clause. The knowledge and information of participant is not required to exceed that which is normally possessed by a prudent person in the ordinary course of business dealings.
i. Except for transactions authorized under paragraph e of these instructions, if a participant in a covered transaction knowingly enters into a lower tier covered transaction with a person who is suspended, debarred, ineligible, or voluntarily excluded from participation in this transaction, in addition to other remedies available to the Federal Government, the department or agency with which this transaction originated may pursue available remedies, including suspension and/or debarment.

*****

Certification Regarding Debarment, Suspension, Ineligibility and Voluntary Exclusion–Lower Tier Participants:

1. The prospective lower tier participant certifies, by submission of this proposal, that neither it nor its principals is presently debarred, suspended, proposed for debarment, declared ineligible, or voluntarily excluded from participating in covered transactions by any Federal department or agency.
2. Where the prospective lower tier participant is unable to certify to any of the statements in this certification, such prospective participant shall attach an explanation to this proposal.

*****

XI. CERTIFICATION REGARDING USE OF CONTRACT FUNDS FOR LOBBYING

This provision is applicable to all Federal-aid construction contracts and to all related subcontracts which exceed $100,000 (49 CFR 20).

1. The prospective participant certifies, by signing and submitting this bid or proposal, to the best of his or her knowledge and belief, that:
   a. No Federal appropriated funds have been paid or will be paid, by or on behalf of the undersigned, to any person for influencing or attempting to influence an officer or employee of any Federal agency, a Member of Congress, an officer or employee of Congress, or an employee of a Member of Congress in connection with the awarding of any Federal contract, the making of any Federal grant, the making of any Federal loan, the entering into of any cooperative agreement, and the extension, continuation, renewal, amendment, or modification of any Federal contract, grant, loan, or cooperative agreement.
   b. If any funds other than Federal appropriated funds have been paid or will be paid to any person for influencing or attempting to influence an officer or employee of any Federal agency, a Member of Congress, an officer or employee of Congress, or an employee of a Member of Congress in connection with this Federal contract, grant, loan, or cooperative agreement, the undersigned shall complete and submit Standard Form-LLL, "Disclosure Form to Report Lobbying," in accordance with its instructions.
2. This certification is a material representation of fact upon which reliance was placed when this transaction was made or entered into. Submission of this certification is a prerequisite for making or entering into this transaction imposed by 31 U.S.C. 1352. Any person who fails to file the required certification shall be subject to a civil penalty of not less than $10,000 and not more than $100,000 for each such failure.
3. The prospective participant also agrees by submitting its bid or proposal that the participant shall require that the language of this certification be included in all lower tier subcontracts, which exceed $100,000 and that all such recipients shall certify and disclose accordingly.

STANDARD SPECIAL PROVISION

ON-THE-JOB TRAINING

(10-16-07) (Rev. 5-21-13) Z-10

Description

The North Carolina Department of Transportation will administer a custom version of the Federal On-the-Job Training (OJT) Program, commonly referred to as the Alternate OJT Program. All contractors (existing and newcomers) will be automatically placed in the Alternate Program. Standard OJT requirements typically associated with individual projects will no longer be applied at the project level. Instead, these requirements will be applicable on an annual basis for each contractor administered by the OJT Program Manager.

On the Job Training shall meet the requirements of 23 CFR 230.107 (b), 23 USC – Section 140, this provision and the On-the-Job Training Program Manual.

The Alternate OJT Program will allow a contractor to train employees on Federal, State and privately funded projects located in North Carolina. However, priority shall be given to training employees on NCDOT Federal-Aid funded projects.

Minorities and Women

Developing, training and upgrading of minorities and women toward journeyman level status is a primary objective of this special training provision. Accordingly, the Contractor shall make every effort to enroll minority and women as trainees to the extent that such persons are available within a reasonable area of recruitment. This training commitment is not intended, and shall not be used, to discriminate against any applicant for training, whether a member of a minority group or not.

Assigning Training Goals

The Department, through the OJT Program Manager, will assign training goals for a calendar year based on the contractors' past three years' activity and the contractors' anticipated upcoming year's activity with the Department. At the beginning of each year, all contractors eligible will be contacted by the Department to determine the number of trainees that will be assigned for the upcoming calendar year. At that time the Contractor shall enter into an agreement with the Department to provide a self-imposed on-the-job training program for the calendar year. This agreement will include a specific number of annual training goals agreed to by both parties. The number of training assignments may range from 1 to 15 per contractor per calendar year. The Contractor shall sign an agreement to fulfill their annual goal for the year. A sample agreement is available at www.ncbowd.com/section/on-the-job-training.

Training Classifications

The Contractor shall provide on-the-job training aimed at developing full journeyman level workers in the construction craft/operator positions. Preference shall be given to providing training in the following skilled work classifications:

Equipment Operators	Office Engineers
Truck Drivers	Estimators
Carpenters	Iron / Reinforcing Steel Workers
Concrete Finishers	Mechanics
Pipe Layers	Welders

The Department has established common training classifications and their respective training requirements that may be used by the contractors. However, the classifications established are not all-inclusive. Where the training is oriented toward construction applications, training will be allowed in lower-level management positions such as office engineers and estimators. Contractors shall submit new classifications for specific job functions that their employees are performing. The Department will review and recommend for acceptance to FHWA the new classifications proposed by contractors, if applicable. New classifications shall meet the following requirements:

Proposed training classifications are reasonable and realistic based on the job skill classification needs, and

The number of training hours specified in the training classification is consistent with common practices and provides enough time for the trainee to obtain journeyman level status.

The Contractor may allow trainees to be trained by a subcontractor provided that the Contractor retains primary responsibility for meeting the training and this provision is made applicable to the subcontract. However, only the Contractor will receive credit towards the annual goal for the trainee.

Where feasible, 25 percent of apprentices or trainees in each occupation shall be in their first year of apprenticeship or training. The number of trainees shall be distributed among the work classifications on the basis of the contractor's needs and the availability of journeymen in the various classifications within a reasonable area of recruitment.

No employee shall be employed as a trainee in any classification in which they have successfully completed a training course leading to journeyman level status or in which they have been employed as a journeyman.

Records and Reports

The Contractor shall maintain enrollment, monthly and completion reports documenting company compliance under these contract documents. These documents and any other information as requested shall be submitted to the OJT Program Manager.

Upon completion and graduation of the program, the Contractor shall provide each trainee with a certification Certificate showing the type and length of training satisfactorily completed.

Trainee Interviews

All trainees enrolled in the program will receive an initial and Trainee/Post graduate interview conducted by the OJT program staff.

Trainee Wages

Contractors shall compensate trainees on a graduating pay scale based upon a percentage of the prevailing minimum journeyman wages (Davis-Bacon Act). Minimum pay shall be as follows:

60 percent	of the journeyman wage for the first half of the training period
75 percent	of the journeyman wage for the third quarter of the training period
90 percent	of the journeyman wage for the last quarter of the training period

In no instance shall a trainee be paid less than the local minimum wage. The Contractor shall adhere to the minimum hourly wage rate that will satisfy both the NC Department of Labor (NCDOL) and the Department.

Achieving or Failing to Meet Training Goals

The Contractor will be credited for each trainee employed by him on the contract work who is currently enrolled or becomes enrolled in an approved program and who receives training for at least 50 percent of the specific program requirement. Trainees will be allowed to be transferred between projects if required by the Contractor's scheduled workload to meet training goals.

If a contractor fails to attain their training assignments for the calendar year, they may be taken off the NCDOT's Bidders List.

Measurement and Payment

No compensation will be made for providing required training in accordance with these contract documents.

STANDARD SPECIAL PROVISION
MINIMUM WAGES
GENERAL DECISION NC130096 01/04/2013 NC96

Z-96

Date: January 4, 2013

General Decision Number: NC130096 01/04/13 NC96

Superseded General Decision Numbers: NC20120096

State: North Carolina

Construction Type: HIGHWAY

COUNTIES:

Bladen	Lee	Robeson
Cleveland	Lenoir	Rowan
Columbus	Lincoln	Sampson
Davidson	Montgomery	Scotland
Duplin	Moore	Stanly
Harnett	Richmond	Wilson
Iredell		

HIGHWAY CONSTRUCTION PROJECTS (excluding tunnels, building structures in rest area projects, railroad construction, bascule, suspension and spandrel arch bridges designed for commercial navigation, bridges involving marine construction, and other major bridges).

Modification Number	Publication Date
0	01/04/2013

SUNC2011-077 09/16/2011

	Rates	Fringes
CARPENTER (Form Work Only)	13.30	
CEMENT MASON/CONCRETE FINISHER	14.18	
INSTALLER (Guardrail) (includes Guiderail/Post Driver Work)	11.76	
IRONWORKER (Reinforcing)	13.90	
LABORER		
Asphalt, Asphalt Distributor, Raker, and Spreader	12.81	
Common or General		
Davidson County	10.64	
Harnett County	10.41	
Iredell County	10.38	
Lenoir County	9.98	
Remaining Counties	10.27	
Richmond County	10.46	
Robeson County	10.07	
Rowan County	10.25	
Stanly County	9.03	
Concrete Saw	11.56	
Landscape	9.90	
Luteman	12.68	
Mason Tender (Cement/Concrete)	10.53	
Pipelayer		
Remaining Counties	11.79	
Stanly County	12.25	
Traffic Control (Flagger)	10.31	
POWER EQUIPMENT OPERATORS		
Backhoe/Excavator/Trackhoe	14.64	
Broom/Sweeper	12.29	
Bulldozer	15.32	
Crane	19.10	
Grader/Blade	19.29	
Loader	13.93	
Mechanic	15.92	
Milling Machine		
Columbus, Davidson, Duplin, Lenoir, Lincoln, Moore, Richmond, and Stanly Counties	14.09	
Remaining Counties	13.80	
Oiler	14.19	
Paver	14.10	
Roller	12.83	
Scraper	12.29	
Screed	14.75	
Tractor	13.92	
TRUCK DRIVER		
Dump Truck		
Davidson County	12.61	
Remaining Counties	11.80	
Lowboy Truck	15.99	
Single Axle Truck	12.07	
Water Truck	13.82	

Welders – Receive rate prescribed for craft performing operation to which welding is incidental.

Unlisted classifications needed for work not included within the scope of the classifications listed may be added after award only as provided in the labor standards contract clauses (29 CFR 5.5(a)(1)(ii)).

The body of each wage determination lists the classification and wage rates that have been found to be prevailing for the cited type(s) of construction in the area covered by the wage determination. The classifications are listed in alphabetical order of "identifiers" that indicate whether the particular rate is union or non-union.

Union Identifiers

An identifier enclosed in dotted lines beginning with characters other than "SU" denotes that the union classification and rate have found to be prevailing for that classification. Example: PLUM0198-005 07/01/2011. The first four letters , PLUM, indicate the international union and the four-digit number, 0198, that follows indicates the local union number or district council number where applicable, i.e., Plumbers Local 0198. The next number, 005 in the example, is an internal number used in processing the wage determination. The date, 07/01/2011, following these characters is the effective date of the most current negotiated rate/collective bargaining agreement which would be July 1, 2011 in the above example.

Union prevailing wage rates will be updated to reflect any changes in the collective bargaining agreements governing the rates.

0000/9999: weighted union wage rates will be published annually each January.

Non-Union Identifiers

Classifications listed under an "SU" identifier were derived from survey data by computing average rates and are not union rates; however, the data used in computing these rates may include both union and non-union data. Example: SULA2004-007 5/13/2010. SU indicates the rates are not union rates, LA indicates the State of Louisiana; 2004 is the year of the survey; and 007 is an internal number used in producing the wage determination. A 1993 or later date, 5/13/2010, indicates the classifications and rates under that identifier were issued as a General Wage Determination on that date.

Survey wage rates will remain in effect and will not change until a new survey is conducted.

WAGE DETERMINATION APPEALS PROCESS

1.) Has there been an initial decision in the matter? This can be:

* an existing published wage determination
* a survey underlying a wage determination
* a Wage and Hour Division letter setting forth a position on a wage determination matter
* a conformance (additional classification and rate) ruling

On survey related matters, initial contact, including requests for summaries of surveys, should be with the Wage and Hour Regional Office for the area in which the survey was conducted because those Regional Offices have responsibility for the Davis-Bacon survey program. If the response from this initial contact is not satisfactory, then the process described in 2.) and 3.) should be followed.

With regard to any other matter not yet ripe for the formal process described here, initial contact should be with the Branch of Construction Wage Determinations. Write to:

Branch of Construction Wage Determinations
Wage and Hour Division
U. S. Department of Labor
200 Constitution Avenue, N.W.
Washington, D.C. 20210

2.) If the answer to the question in 1.) is yes, then an interested party (those affected by the action) can request review and reconsideration from the Wage and Hour Administrator (See 29 CFR Part 1.8 and 29 CFR Part 7). Write to:

Wage and Hour Administrator
U.S. Department of Labor
200 Constitution Avenue, N.W.
Washington, D.C. 20210

The request should be accompanied by a full statement of the interested party's position and by any information (wage payment data, project description, area practice material, etc.) that the requestor considers relevant to the issue.

3.) If the decision of the Administrator is not favorable, an interested party may appeal directly to the Administrative Review Board (formerly the Wage Appeals Board). Write to:

Administrative Review Board
U.S. Department of Labor
200 Constitution Avenue, N.W.
Washington, D.C. 20210

4.) All decisions by the Administrative Review Board are final.

END OF GENERAL DECISION

ITEMIZED PROPOSAL FOR CONTRACT NO. C203253

Line #	Item Number	Sec #	Description	Quantity	Unit Cost	Amount
			ROADWAY ITEMS			
0001	0000100000-N	800	MOBILIZATION	Lump Sum	L.S.	
0002	2591000000-E	848	4" CONCRETE SIDEWALK	20 SY		
0003	4405000000-E	1110	WORK ZONE SIGNS (PORTABLE)	320 SF		
0004	4410000000-E	1110	WORK ZONE SIGNS (BARRICADE MOUNTED)	143 SF		
0005	4415000000-N	1115	FLASHING ARROW BOARD	2 EA		
0006	4420000000-N	1120	PORTABLE CHANGEABLE MESSAGE SIGN	2 EA		
0007	4430000000-N	1130	DRUMS	60 EA		
0008	4435000000-N	1135	CONES	40 EA		
0009	4445000000-E	1145	BARRICADES (TYPE III)	80 LF		
0010	4450000000-N	1150	FLAGGER	2,880 HR		
0011	4480000000-N	1165	TMA	2 EA		
0012	4510000000-N	SP	LAW ENFORCEMENT	1,440 HR		
0013	4516000000-N	1180	SKINNY DRUM	40 EA		
0014	7000000000-E	1705	PEDESTRIAN SIGNAL HEAD (**", ** SECTION) (16", 1 SECTION W/ COUNTDOWN DARK GREEN FINISH)	26 EA		
0015	7000000000-E	1705	PEDESTRIAN SIGNAL HEAD (**", ** SECTION) (16", 1 SECTION W/ COUNTDOWN)	2 EA		
0016	7060000000-E	1705	SIGNAL CABLE	19,320 LF		
0017	7120000000-E	1705	VEHICLE SIGNAL HEAD (12", 3 SECTION)	85 EA		
0018	7132000000-E	1705	VEHICLE SIGNAL HEAD (12", 4 SECTION)	72 EA		

Line #	Item Number	Sec #	Description	Quantity	Unit Cost	Amount
0019	7144000000-E	1705	VEHICLE SIGNAL HEAD (12", 5 SECTION)	4 EA		
0020	7279000000-E	1715	TRACER WIRE	550 LF		
0021	7300000000-E	1715	UNPAVED TRENCHING (**********) (2, 2")	525 LF		
0022	7301000000-E	1715	DIRECTIONAL DRILL (**********) (2, 2")	670 LF		
0023	7312000000-N	1716	JUNCTION BOX (**********) (OVERSIZED)	3 EA		
0024	7324000000-N	1716	JUNCTION BOX (STANDARD SIZE)	2 EA		
0025	7420000000-E	1722	2" RISER WITH WEATHERHEAD	2 EA		
0026	7430000000-N	1722	HEAT SHRINK TUBING RETROFIT KIT	2 EA		
0027	7456000000-E	1726	LEAD-IN CABLE (**********) (14-2)	100 LF		
0028	7528000000-E	1730	DROP CABLE	700 LF		
0029	7540000000-N	1731	SPLICE ENCLOSURE	9 EA		
0030	7566000000-N	1733	DELINEATOR MARKER	1 EA		
0031	7575142200-N	SP	NEW ELECTRICAL SERVICE	2 EA		
0032	7636000000-N	1745	SIGN FOR SIGNALS	9 EA		
0033	7684000000-N	1750	SIGNAL CABINET FOUNDATION	14 EA		
0034	7686000000-N	1752	CONDUIT ENTRANCE INTO EXISTING FOUNDATION	2 EA		
0035	7687000000-N	1752	MODIFY FOUNDATION FOR CONTROL-LER CABINET	31 EA		
0036	7696000000-N	1751	CONTROLLER WITH CABINET (**********) (2070L 332 BASE MOUNTED, PAINTED FINISH)	12 EA		

Line #	Item Number	Sec #	Description	Quantity	Unit Cost	Amount
0037	7780000000-N	1751	DETECTOR CARD (TYPE 2070L)	326 EA		
0038	7901000000-N	1753	CABINET BASE EXTENDER	51 EA		
0039	7901010000-N	1753	CABINET BASE ADAPTER	16 EA		
0040	7980000000-N	SP	GENERIC SIGNAL ITEM 5/8" X 10' GROUNDING ELECTRODE	59 EA		
0041	7980000000-N	SP	GENERIC SIGNAL ITEM 900MHZ ETHERNET RADIO	2 EA		
0042	7980000000-N	SP	GENERIC SIGNAL ITEM BACKUP STORAGE SERVER	1 EA		
0043	7980000000-N	SP	GENERIC SIGNAL ITEM CABINET BASE ADAPTER (PAINTED FINISH)	1 EA		
0044	7980000000-N	SP	GENERIC SIGNAL ITEM CABINET BASE EXTENDER (PAINTED FINISH)	7 EA		
0045	7980000000-N	SP	GENERIC SIGNAL ITEM CCTV CONTROL PANEL	1 EA		
0046	7980000000-N	SP	GENERIC SIGNAL ITEM CCTV VIDEO SERVER	1 EA		
0047	7980000000-N	SP	GENERIC SIGNAL ITEM CCTV WOOD POLE (50')	2 EA		
0048	7980000000-N	SP	GENERIC SIGNAL ITEM COMPUTER WORKSTATION	1 EA		
0049	7980000000-N	SP	GENERIC SIGNAL ITEM CONTROLLER W/ CABINET & AUX FILE (2070L, 332 BASE MTD, PAINTED FINISH)	6 EA		
0050	7980000000-N	SP	GENERIC SIGNAL ITEM CONTROLLER WITH CABINET (2070L, BASE MOUNTED)	13 EA		
0051	7980000000-N	SP	GENERIC SIGNAL ITEM CONTROLLER WITH CABINET AND AUX FILE (2070L, 332 BASE MOUNTED)	52 EA		

Line #	Item Number	Sec #	Description	Quantity	Unit Cost	Amount
0052	7980000000-N	SP	GENERIC SIGNAL ITEM CONTROLLER WITH RECONFIGURED CABINET (2070L, 332 BASE MOUNTED)	1 EA		
0053	7980000000-N	SP	GENERIC SIGNAL ITEM CORE ETHERNET SWITCH	1 EA		
0054	7980000000-N	SP	GENERIC SIGNAL ITEM DIGITAL CCTV CAMERA ASSEMBLY	5 EA		
0055	7980000000-N	SP	GENERIC SIGNAL ITEM DISTRIBUTED PROCESSING SIGNAL SYSTEM SERVER	1 EA		
0056	7980000000-N	SP	GENERIC SIGNAL ITEM ELECTRICAL SERVICE & CABINET FOUNDATION FOR DOWNTOWN TRAF-FIC SIGNAL	10 EA		
0057	7980000000-N	SP	GENERIC SIGNAL ITEM EQUIPMENT RACK CABINET	1 EA		
0058	7980000000-N	SP	GENERIC SIGNAL ITEM FIELD ETHERNET SWITCH	87 EA		
0059	7980000000-N	SP	GENERIC SIGNAL ITEM FURNISH 2070L CONTROLLER	3 EA		
0060	7980000000-N	SP	GENERIC SIGNAL ITEM FURNISH AC ISOLATOR CARD	3 EA		
0061	7980000000-N	SP	GENERIC SIGNAL ITEM FURNISH BASE MOUNT 332 CABINET	2 EA		
0062	7980000000-N	SP	GENERIC SIGNAL ITEM FURNISH CCTV ASSEMBLY	1 EA		
0063	7980000000-N	SP	GENERIC SIGNAL ITEM FURNISH CCTV TEST CABINET	1 EA		
0064	7980000000-N	SP	GENERIC SIGNAL ITEM FURNISH CCTV TEST MONITOR	1 EA		
0065	7980000000-N	SP	GENERIC SIGNAL ITEM FURNISH CONFLICT MONITOR	3 EA		
0066	7980000000-N	SP	GENERIC SIGNAL ITEM FURNISH CONTROLLER TESTER	1 EA		

Line #	Item Number	Sec #	Description	Quantity	Unit Cost	Amount
0067	7980000000-N	SP	GENERIC SIGNAL ITEM FURNISH DC ISOLATOR CARD	3 EA		
0068	7980000000-N	SP	GENERIC SIGNAL ITEM FURNISH DETECTOR CARD	6 EA		
0069	7980000000-N	SP	GENERIC SIGNAL ITEM FURNISH FIBER OPTIC INTERCON- NECT CENTER	5 EA		
0070	7980000000-N	SP	GENERIC SIGNAL ITEM FURNISH FIELD ETHERNET SWITCH	10 EA		
0071	7980000000-N	SP	GENERIC SIGNAL ITEM FURNISH FLASH TRANSFER RELAY	4 EA		
0072	7980000000-N	SP	GENERIC SIGNAL ITEM FURNISH FLASHER MODULE	2 EA		
0073	7980000000-N	SP	GENERIC SIGNAL ITEM FURNISH LOAD SWITCH	3 EA		
0074	7980000000-N	SP	GENERIC SIGNAL ITEM FURNISH POLE MOUNT 336 CABINET	1 EA		
0075	7980000000-N	SP	GENERIC SIGNAL ITEM FURNISH SIGNAL MONITOR TESTER	1 EA		
0076	7980000000-N	SP	GENERIC SIGNAL ITEM FURNISH ST JUMPERS	8 EA		
0077	7980000000-N	SP	GENERIC SIGNAL ITEM FURNISH ST PIGTAILS	8 EA		
0078	7980000000-N	SP	GENERIC SIGNAL ITEM FURNISH ST SPLICE CONNECTOR	8 EA		
0079	7980000000-N	SP	GENERIC SIGNAL ITEM FURNISH ST-LC HYBRID JUMPERS	8 EA		
0080	7980000000-N	SP	GENERIC SIGNAL ITEM FURNISH SURGE PROTECTOR	10 EA		
0081	7980000000-N	SP	GENERIC SIGNAL ITEM FURNISH TEST CABINET/CONTROL- LER	1 EA		
0082	7980000000-N	SP	GENERIC SIGNAL ITEM INTERCONNECT CENTER (OVER- SIZED)	12 EA		

Line #	Item Number	Sec #	Description	Quantity	Unit Cost	Amount
0083	7980000000-N	SP	GENERIC SIGNAL ITEM INTERCONNECT CENTER (STANDARD)	75 EA		
0084	7980000000-N	SP	GENERIC SIGNAL ITEM KVM SWITCH	1 EA		
0085	7980000000-N	SP	GENERIC SIGNAL ITEM LCD VIDEO MONITOR	4 EA		
0086	7980000000-N	SP	GENERIC SIGNAL ITEM MODIFY EXISTING ELECTRICAL SERVICE	17 EA		
0087	7980000000-N	SP	GENERIC SIGNAL ITEM MODIFY EXISTING SPLICE ENCLO-SURE OR INTERCONNECT CENTER	7 EA		
0088	7980000000-N	SP	GENERIC SIGNAL ITEM NETWORK ETHERNET SWITCH	1 EA		
0089	7980000000-N	SP	GENERIC SIGNAL ITEM NOTEBOOK COMPUTER	3 EA		
0090	7980000000-N	SP	GENERIC SIGNAL ITEM POLE MOUNTED CCTV EQUIPMENT CABINET	5 EA		
0091	7980000000-N	SP	GENERIC SIGNAL ITEM PRINTER	1 EA		
0092	7980000000-N	SP	GENERIC SIGNAL ITEM REMOTE ACCESS SERVER	1 EA		
0093	7980000000-N	SP	GENERIC SIGNAL ITEM SIGNAL SYSTEM COMMUNICATIONS SERVER	1 EA		
0094	7980000000-N	SP	GENERIC SIGNAL ITEM TERMINAL SPLICE BOX	10 EA		
0095	7980000000-N	SP	GENERIC SIGNAL ITEM VIDEO MONITOR PROCESSOR UNIT	1 EA		
0096	7980000000-N	SP	GENERIC SIGNAL ITEM VPN FIREWALL	1 EA		
0097	7985000000-N	SP	GENERIC SIGNAL ITEM CCTV SYSTEM SOFTWARE	Lump Sum	L.S.	

County : Rowan

Line #	Item Number	Sec #	Description	Quantity	Unit Cost	Amount
0098	7985000000-N	SP	GENERIC SIGNAL ITEM COMPUTER HARDWARE INTEGRATION	Lump Sum	L.S.	
0099	7985000000-N	SP	GENERIC SIGNAL ITEM LAN INTEGRATION	Lump Sum	L.S.	
0100	7985000000-N	SP	GENERIC SIGNAL ITEM SIGNAL SYSTEM SOFTWARE	Lump Sum	L.S.	
0101	7985000000-N	SP	GENERIC SIGNAL ITEM SYSTEM SUPPORT SOFTWARE	Lump Sum	L.S.	
0102	7985000000-N	SP	GENERIC SIGNAL ITEM TRAINING	Lump Sum	L.S.	
0103	7990000000-E	SP	GENERIC SIGNAL ITEM ETHERNET CABLE	240 LF		
0104	7991000000-E	SP	GENERIC SIGNAL ITEM BRICK PAVERS	100 SF		

Total Amount Of Bid For Entire Project :

Vendor 1 of 6: TRAFFIC CONTROL DEVICES, INC. (3554)
Call Order 017 (Proposal: C203253)

Bid Information

County: ROWAN
Address: 242 N. Westmonte Drive
Altamonte Srpings , FL , 32714
Signature Check: Gregory_S._Cockman_3554
Time Bid Received: October 15, 2013 11:35 AM
Amendment Count: 0

Bid Checksum: 98638EBC
Bid Total: $2,485,485.00
Items Total: $2,485,485.00
Time Total: $0.00

Bidding Errors:
None.

DBE GOAL SET 3.0

DBE GOAL MET 3.0

Vendor 1 of 6: TRAFFIC CONTROL DEVICES, INC. (3554)
Call Order 017 (Proposal: C203253)

Bid Bond Information

Projects:		**Bond Maximum:**	
Counties:		**State of Incorporation:**	
Bond ID:	SNC13106946	**Agency Execution Date:**	10/11/2013 12
Paid by Check:	No	**Surety Name:**	surety2000
Bond Percent:	5%	**Bond Agency Name:**	Travelers Casualty and Surety Company of America

Vendor 3554's Bid Information for Call 017, Letting L131015, 10/15/13

Traffic Control Devices, Inc. (3554)
Call Order 017 (Proposal ID C203253)

LIST OF DBE PARTICIPANTS

VENDOR NUMBER	DBE NAME ADDRESS	WORK CODE	TYPE OF WORK	CERT TYPE	AMOUNT	
11479WB	PRECISION CONTRACTING SERVICES, 311 W. INDIANTOWN ROAD/STE. 7 , JUPITER, FL 33458			Sub	77,625.00	Committed
			TOTAL:		$77,625.00	
					3.12%	

Vendor 3554's Bid Information for Call 017, Letting L131015, 10/15/13

Traffic Control Devices, Inc. (3554)
Call Order 017 (Proposal ID C203253)

Miscelleneous Data Info - Contractor Responses:
==========

NON-COLLUSION AND DEBARMENT CERTIFICATION

Explanation of the prospective bidder that is unable to certify to any of the statements in this certification:

Explanation:
NOT ANSWERED
NOT ANSWERED
NOT ANSWERED
NOT ANSWERED

AWARD LIMITS ON MULTIPLE PROJECTS

By answering YES to this statement, the bidder acknowleges that they are using the award limits on multiple projects. No

It is the desire of the Bidder to be awarded contracts, the value of which will not exceed a total of NOT ANSWERED for those projects indicated herein, for which bids will be opened on (MM/DD/YY)

The Award Limits shall apply to the following projects:

Contract Number	County
NOT ANSWERED	
NOT ANSWERED	
NOT ANSWERED	
NOT ANSWERED	
NOT ANSWERED	
NOT ANSWERED	

Bid Bond Data Info - Contractor Responses:
==========

BondID: SNC13106946
Surety Registry Agency: surety2000
Verified?: Yes

```
      Surety Agency: Travelers Casualty and Surety Company of America
Bond Execution Date: 10/11/2013 12
        Bond Amount:     $124,274.25 (Five Percent of Bid)
```

State of NC
Dept of Transportation

Date: 09-17-13
Revised:

Contract ID: C203253 Project(s): CMS-0914(34)
Letting Date: 10-15-13 Call Order: 017
Bidder: 3554 - Traffic Control Devices, Inc.

Line No.	Item Description	Approx. Quantity and Units	Unit Price Dollars	Unit Price Cts	Bid Amount Dollars	Bid Amount Ct
Section 0001	ROADWAY ITEMS					
	Alt Group					
0001	0000100000-N MOBILIZATION	LUMP	LUMP		124,000.00	
0002	2591000000-E 4" CONCRETE SIDEWALK	20.000 SY	126.00000		2,520.00	
0003	4405000000-E WORK ZONE SIGNS (PORTABLE)	320.000 SF	7.00000		2,240.00	
0004	4410000000-E WORK ZONE SIGNS (BARRICADE MOUNTED)	143.000 SF	7.00000		1,001.00	
0005	4415000000-N FLASHING ARROW BOARD	2.000 EA	750.00000		1,500.00	
0006	4420000000-N PORTABLE CHANGEABLE MESSAGE SIGN	2.000 EA	900.00000		1,800.00	
0007	4430000000-N DRUMS	60.000 EA	40.00000		2,400.00	
0008	4435000000-N CONES	40.000 EA	16.00000		640.00	
0009	4445000000-E BARRICADES (TYPE III)	80.000 LF	25.00000		2,000.00	
0010	4450000000-N FLAGGER	2,880.000 HR	12.00000		34,560.00	
0011	4480000000-N TMA	2.000 EA	2,514.00000		5,028.00	

Contract ID: C203253 Project(s): CMS-0914(34)
Letting Date: 10-15-13 Call Order: 017
Bidder: 3554 - Traffic Control Devices, Inc.

Line No.	Item Description	Approx. Quantity and Units	Unit Price Dollars	Unit Price Cts	Bid Amount Dollars	Bid Amount Ct
0012	4510000000-N LAW ENFORCEMENT	1,440.000 HR	29.00000		41,760.00	
0013	4516000000-N SKINNY DRUM	40.000 EA	27.50000		1,100.00	
0014	7000000000-E PEDESTRIAN SIGNAL HEAD (**", ** SECTION) (16", 1 SECTION W/ COUNTDOWN DARK GREEN FINISH)	26.000 EA	736.00000		19,136.00	
0015	7000000000-E PEDESTRIAN SIGNAL HEAD (**", ** SECTION) (16", 1 SECTION W/ COUNTDOWN)	2.000 EA	691.00000		1,382.00	
0016	7060000000-E SIGNAL CABLE	19,320.000 LF	1.70000		32,844.00	
0017	7120000000-E VEHICLE SIGNAL HEAD (12", 3 SECTION)	85.000 EA	645.00000		54,825.00	
0018	7132000000-E VEHICLE SIGNAL HEAD (12", 4 SECTION)	72.000 EA	839.00000		60,408.00	
0019	7144000000-E VEHICLE SIGNAL HEAD (12", 5 SECTION)	4.000 EA	1,064.00000		4,256.00	
0020	7279000000-E TRACER WIRE	550.000 LF	0.60000		330.00	
0021	7300000000-E UNPAVED TRENCHING (**********) (2, 2")	525.000 LF	7.90000		4,147.50	
0022	7301000000-E DIRECTIONAL DRILL (**********) (2, 2")	670.000 LF	14.00000		9,380.00	

Contract ID: C203253 Project(s): CMS-0914(34)
Letting Date: 10-15-13 Call Order: 017
Bidder: 3554 - Traffic Control Devices, Inc.

Line No.	Item Description	Approx. Quantity and Units	Unit Price Dollars	Unit Price Cts	Bid Amount Dollars	Bid Amount Ct
0023	7312000000-N JUNCTION BOX (**********) (OVERSIZED)	3.000 EA	458.00000		1,374.00	
0024	7324000000-N JUNCTION BOX (STANDARD SIZE)	2.000 EA	255.00000		510.00	
0025	7420000000-E 2" RISER WITH WEATHERHEAD	2.000 EA	565.00000		1,130.00	
0026	7430000000-N HEAT SHRINK TUBING RETROFIT KIT	2.000 EA	87.00000		174.00	
0027	7456000000-E LEAD-IN CABLE (**********) (14-2)	100.000 LF	1.80000		180.00	
0028	7528000000-E DROP CABLE	700.000 LF	2.30000		1,610.00	
0029	7540000000-N SPLICE ENCLOSURE	9.000 EA	1,244.00000		11,196.00	
0030	7566000000-N DELINEATOR MARKER	1.000 EA	99.00000		99.00	
0031	7575142200-N NEW ELECTRICAL SERVICE	2.000 EA	1,210.00000		2,420.00	
0032	7636000000-N SIGN FOR SIGNALS	9.000 EA	337.00000		3,033.00	
0033	7684000000-N SIGNAL CABINET FOUNDATION	14.000 EA	1,476.00000		20,664.00	
0034	7686000000-N CONDUIT ENTRANCE INTO EXISTINGFOUNDATION	2.000 EA	580.00000		1,160.00	

Contract ID: C203253 Project(s): CMS-0914(34)
Letting Date: 10-15-13 Call Order: 017
Bidder: 3554 - Traffic Control Devices, Inc.

Line No.	Item Description	Approx. Quantity and Units	Unit Price Dollars	Unit Price Cts	Bid Amount Dollars	Bid Amount Ct
0035	7687000000-N MODIFY FOUNDATION FOR CONTROL-LER CABINET	31.000 EA	1,110.00000		34,410.00	
0036	7696000000-N CONTROLLER WITH CABINET (**********) (2070L 332 BASE MOUNTED, PAINTED FINISH)	12.000 EA	10,614.00000		127,368.00	
0037	7780000000-N DETECTOR CARD (TYPE 2070L)	326.000 EA	102.00000		33,252.00	
0038	7901000000-N CABINET BASE EXTENDER	51.000 EA	230.00000		11,730.00	
0039	7901010000-N CABINET BASE ADAPTER	16.000 EA	247.00000		3,952.00	
0040	7980000000-N GENERIC SIGNAL ITEM 5/8" X 10' GROUNDING ELECTRODE	59.000 EA	77.00000		4,543.00	
0041	7980000000-N GENERIC SIGNAL ITEM 900MHZ ETHERNET RADIO	2.000 EA	4,552.00000		9,104.00	
0042	7980000000-N GENERIC SIGNAL ITEM BACKUP STORAGE SERVER	1.000 EA	7,338.00000		7,338.00	
0043	7980000000-N GENERIC SIGNAL ITEM CABINET BASE ADAPTER (PAINTED FINISH)	1.000 EA	327.00000		327.00	
0044	7980000000-N GENERIC SIGNAL ITEM CABINET BASE EXTENDER (PAINTEDFINISH)	7.000 EA	311.00000		2,177.00	
0045	7980000000-N GENERIC SIGNAL ITEM CCTV CONTROL PANEL	1.000 EA	1,302.00000		1,302.00	

Contract ID: C203253 Project(s): CMS-0914(34)
Letting Date: 10-15-13 Call Order: 017
Bidder: 3554 - Traffic Control Devices, Inc.

Line No.	Item Description	Approx. Quantity and Units	Unit Price Dollars	Unit Price Cts	Bid Amount Dollars	Bid Amount Ct
0046	7980000000-N GENERIC SIGNAL ITEM CCTV VIDEO SERVER	1.000 EA	9,719.00000		9,719.00	
0047	7980000000-N GENERIC SIGNAL ITEM CCTV WOOD POLE (50')	2.000 EA	2,594.00000		5,188.00	
0048	7980000000-N GENERIC SIGNAL ITEM COMPUTER WORKSTATION	1.000 EA	7,091.00000		7,091.00	
0049	7980000000-N GENERIC SIGNAL ITEM CONTROLLER W/ CABINET & AUX FILE (2070L, 332 BASE MTD, PAINTED FINISH)	6.000 EA	11,263.00000		67,578.00	
0050	7980000000-N GENERIC SIGNAL ITEM CONTROLLER WITH CABINET (2070L, BASE MOUNTED)	13.000 EA	10,264.00000		133,432.00	
0051	7980000000-N GENERIC SIGNAL ITEM CONTROLLER WITH CABINET AND AUX FILE (2070L, 332 BASE MOUNTED)	52.000 EA	10,912.00000		567,424.00	
0052	7980000000-N GENERIC SIGNAL ITEM CONTROLLER WITH RECONFIGURED CABINET (2070L, 332 BASE MOUNTED)	1.000 EA	10,264.00000		10,264.00	
0053	7980000000-N GENERIC SIGNAL ITEM CORE ETHERNET SWITCH	1.000 EA	72,358.00000		72,358.00	
0054	7980000000-N GENERIC SIGNAL ITEM DIGITAL CCTV CAMERA ASSEMBLY	5.000 EA	4,534.00000		22,670.00	
0055	7980000000-N GENERIC SIGNAL ITEM DISTRIBUTED PROCESSING SIGNAL SYSTEM SERVER	1.000 EA	10,230.00000		10,230.00	

Contract ID: C203253 Project(s): CMS-0914(34)
Letting Date: 10-15-13 Call Order: 017
Bidder: 3554 - Traffic Control Devices, Inc.

Line No.	Item Description	Approx. Quantity and Units	Unit Price Dollars	Unit Price Cts	Bid Amount Dollars	Bid Amount Ct
0056	7980000000-N GENERIC SIGNAL ITEM ELECTRICAL SERVICE & CABINET FOUNDATION FOR DOWNTOWN TRAF- FIC SIGNAL	10.000 EA	1,842.00000		18,420.00	
0057	7980000000-N GENERIC SIGNAL ITEM EQUIPMENT RACK CABINET	1.000 EA	2,511.00000		2,511.00	
0058	7980000000-N GENERIC SIGNAL ITEM FIELD ETHERNET SWITCH	87.000 EA	1,145.00000		99,615.00	
0059	7980000000-N GENERIC SIGNAL ITEM FURNISH 2070L CONTROLLER	3.000 EA	1,881.00000		5,643.00	
0060	7980000000-N GENERIC SIGNAL ITEM FURNISH AC ISOLATOR CARD	3.000 EA	39.50000		118.50	
0061	7980000000-N GENERIC SIGNAL ITEM FURNISH BASE MOUNT 332 CABINET	2.000 EA	6,882.00000		13,764.00	
0062	7980000000-N GENERIC SIGNAL ITEM FURNISH CCTV ASSEMBLY	1.000 EA	3,592.00000		3,592.00	
0063	7980000000-N GENERIC SIGNAL ITEM FURNISH CCTV TEST CABINET	1.000 EA	3,326.00000		3,326.00	
0064	7980000000-N GENERIC SIGNAL ITEM FURNISH CCTV TEST MONITOR	1.000 EA	723.00000		723.00	
0065	7980000000-N GENERIC SIGNAL ITEM FURNISH CONFLICT MONITOR	3.000 EA	632.00000		1,896.00	
0066	7980000000-N GENERIC SIGNAL ITEM FURNISH CONTROLLER TESTER	1.000 EA	4,795.00000		4,795.00	

Contract ID: C203253 Project(s): CMS-0914(34)
Letting Date: 10-15-13 Call Order: 017
Bidder: 3554 - Traffic Control Devices, Inc.

Line No.	Item Description	Approx. Quantity and Units	Unit Price Dollars	Unit Price Cts	Bid Amount Dollars	Bid Amount Ct
0067	7980000000-N GENERIC SIGNAL ITEM FURNISH DC ISOLATOR CARD	3.000 EA	29.50000		88.50	
0068	7980000000-N GENERIC SIGNAL ITEM FURNISH DETECTOR CARD	6.000 EA	65.50000		393.00	
0069	7980000000-N GENERIC SIGNAL ITEM FURNISH FIBER OPTIC INTERCON- NECT CENTER	5.000 EA	364.00000		1,820.00	
0070	7980000000-N GENERIC SIGNAL ITEM FURNISH FIELD ETHERNET SWITCH	10.000 EA	975.00000		9,750.00	
0071	7980000000-N GENERIC SIGNAL ITEM FURNISH FLASH TRANSFER RELAY	4.000 EA	26.00000		104.00	
0072	7980000000-N GENERIC SIGNAL ITEM FURNISH FLASHER MODULE	2.000 EA	22.50000		45.00	
0073	7980000000-N GENERIC SIGNAL ITEM FURNISH LOAD SWITCH	3.000 EA	21.50000		64.50	
0074	7980000000-N GENERIC SIGNAL ITEM FURNISH POLE MOUNT 336 CABINET	1.000 EA	6,161.00000		6,161.00	
0075	7980000000-N GENERIC SIGNAL ITEM FURNISH SIGNAL MONITOR TESTER	1.000 EA	18,138.00000		18,138.00	
0076	7980000000-N GENERIC SIGNAL ITEM FURNISH ST JUMPERS	8.000 EA	29.00000		232.00	
0077	7980000000-N GENERIC SIGNAL ITEM FURNISH ST PIGTAILS	8.000 EA	14.00000		112.00	

Contract ID: C203253 Project(s): CMS-0914(34)
Letting Date: 10-15-13 Call Order: 017
Bidder: 3554 - Traffic Control Devices, Inc.

Line No.	Item Description	Approx. Quantity and Units	Unit Price Dollars	Unit Price Cts	Bid Amount Dollars	Bid Amount Ct
0078	7980000000-N GENERIC SIGNAL ITEM FURNISH ST SPLICE CONNECTOR	8.000 EA	29.00000		232.00	
0079	7980000000-N GENERIC SIGNAL ITEM FURNISH ST-LC HYBRID JUMPERS	8.000 EA	46.50000		372.00	
0080	7980000000-N GENERIC SIGNAL ITEM FURNISH SURGE PROTECTOR	10.000 EA	54.00000		540.00	
0081	7980000000-N GENERIC SIGNAL ITEM FURNISH TEST CABINET/CONTROL- LER	1.000 EA	13,380.00000		13,380.00	
0082	7980000000-N GENERIC SIGNAL ITEM INTERCONNECT CENTER (OVER- SIZED)	12.000 EA	1,822.00000		21,864.00	
0083	7980000000-N GENERIC SIGNAL ITEM INTERCONNECT CENTER (STANDARD)	75.000 EA	1,197.00000		89,775.00	
0084	7980000000-N GENERIC SIGNAL ITEM KVM SWITCH	1.000 EA	1,881.00000		1,881.00	
0085	7980000000-N GENERIC SIGNAL ITEM LCD VIDEO MONITOR	4.000 EA	1,735.00000		6,940.00	
0086	7980000000-N GENERIC SIGNAL ITEM MODIFY EXISTING ELECTRICAL SERVICE	17.000 EA	582.00000		9,894.00	
0087	7980000000-N GENERIC SIGNAL ITEM MODIFY EXISTING SPLICE ENCLO- SURE OR INTERCONNECT CENTER	7.000 EA	1,302.00000		9,114.00	
0088	7980000000-N GENERIC SIGNAL ITEM NETWORK ETHERNET SWITCH	1.000 EA	2,169.00000		2,169.00	

Contract ID: C203253 Project(s): CMS-0914(34)
Letting Date: 10-15-13 Call Order: 017
Bidder: 3554 - Traffic Control Devices, Inc.

Line No.	Item Description	Approx. Quantity and Units	Unit Price Dollars	Unit Price Cts	Bid Amount Dollars	Bid Amount Ct
0089	7980000000-N GENERIC SIGNAL ITEM NOTEBOOK COMPUTER	3.000 EA	2,117.00000		6,351.00	
0090	7980000000-N GENERIC SIGNAL ITEM POLE MOUNTED CCTV EQUIPMENT CABINET	5.000 EA	3,390.00000		16,950.00	
0091	7980000000-N GENERIC SIGNAL ITEM PRINTER	1.000 EA	10,590.00000		10,590.00	
0092	7980000000-N GENERIC SIGNAL ITEM REMOTE ACCESS SERVER	1.000 EA	9,353.00000		9,353.00	
0093	7980000000-N GENERIC SIGNAL ITEM SIGNAL SYSTEM COMMUNICATIONS SERVER	1.000 EA	7,338.00000		7,338.00	
0094	7980000000-N GENERIC SIGNAL ITEM TERMINAL SPLICE BOX	10.000 EA	2,538.00000		25,380.00	
0095	7980000000-N GENERIC SIGNAL ITEM VIDEO MONITOR PROCESSOR UNIT	1.000 EA	9,401.00000		9,401.00	
0096	7980000000-N GENERIC SIGNAL ITEM VPN FIREWALL	1.000 EA	2,777.00000		2,777.00	
0097	7985000000-N GENERIC SIGNAL ITEM CCTV SYSTEM SOFTWARE	LUMP	LUMP		10,847.00	
0098	7985000000-N GENERIC SIGNAL ITEM COMPUTER HARDWARE INTEGRATION	LUMP	LUMP		84,542.00	
0099	7985000000-N GENERIC SIGNAL ITEM LAN INTEGRATION	LUMP	LUMP		15,186.00	
0100	7985000000-N GENERIC SIGNAL ITEM SIGNAL SYSTEM SOFTWARE	LUMP	LUMP		239,016.00	

Contract ID: C203253 Project(s): CMS-0914(34)
Letting Date: 10-15-13 Call Order: 017
Bidder: 3554 - Traffic Control Devices, Inc.

Line No.	Item Description	Approx. Quantity and Units	Unit Price Dollars	Unit Price Cts	Bid Amount Dollars	Bid Amount Ct
0101	7985000000-N GENERIC SIGNAL ITEM SYSTEM SUPPORT SOFTWARE	LUMP	LUMP		54,554.00	
0102	7985000000-N GENERIC SIGNAL ITEM TRAINING	LUMP	LUMP		49,301.00	
0103	7990000000-E GENERIC SIGNAL ITEM ETHERNET CABLE	240.000 LF	2.55000		612.00	
0104	7991000000-E GENERIC SIGNAL ITEM BRICK PAVERS	100.000 SF	35.50000		3,550.00	
	Section 0001 Total				2,485,485.00	
	Bid Total				2,485,485.00	

NON-COLLUSION AND DEBARMENT CERTIFICATION

The bidder certifies that neither he, nor any official, agent or employee of the bidder has entered into any agreement, participated in any collusion, or otherwise taken any action which is in restraint of free competitive bidding in connection with this bid, and that the bidder intends to do the work with its own bonafide employees or subcontractors and is not bidding for the benefit of another contractor. In addition, submitting this electronic bid constitutes the bidder's certification of Status under penalty of perjury under the laws of the United States and in accordance with the Debarment Certification on file with the Department.

By submitting this bid, the bidder certifies to the best of his knowledge and belief that he and his principals:

a. Are not presently debarred, suspended, proposed for debarment, declared ineligible, or voluntarily excluded from covered transactions by any Federal department or agency;

b. Have not within a three-year period preceding this proposal been convicted of or had a civil judgment rendered against them for commission of fraud or a criminal offense in connection with obtaining, attempting to obtain, or performing a public (Federal, State or local) transaction or contract under a public transaction; violation of Federal or State antitrust statutes or commission of embezzlement, theft, forgery, bribery, falsification or destruction of records; making false statements; or receiving stolen property;

c. Are not presently indicted for or otherwise criminally or civilly charged by a governmental entity (Federal, State or local) with commission of any of the offenses enumerated in paragraph b. of this certification; and

d. Have not within a three-year period preceding this proposal had one or more public transactions (Federal, State or local) terminated for cause or default.

Where the prospective bidder is unable to certify to any of the statements in this certification, the bidder shall submit an explanation in the blanks provided herein. The explanation will not necessarily result in denial of participation in a contract.

Explanation:
NOT ANSWERED
NOT ANSWERED
NOT ANSWERED
NOT ANSWERED

If the prequalified bidder's status changes, he shall immediately submit a new fully executed non-collusion affidavit and debarment certification with an explanation of the change to the Contract Office prior to submitting the bid.

Failure to furnish a certification or an explanation will be grounds for rejection of a bid

AWARD LIMITS ON MULTIPLE PROJECTS

By answering YES to this statement, the bidder acknowleges that they are using the award limits on multiple projects. No

A bidder who desires to bid on more than one project on which bids are to be opened on the same date, and who also desires to avoid receiving an award of more projects than he is equipped to handle, may bid on any number of projects but may limit the total amount of work awarded to him on selected projects by completing the AWARD LIMITS ON MULTIPLE PROJECTS.

The Award Limits on Multiple Projects must be filled in on each project bid for which the Bidder desires protection.

It is the desire of the Bidder to be awarded contracts, the value of which

will not exceed a total of NOT ANSWERED for those

projects indicated herein, for which bids will be opened on (MM/DD/YY)

The Award Limits shall apply to the following projects:

Contract Number	County
NOT ANSWERED	
NOT ANSWERED	
NOT ANSWERED	
NOT ANSWERED	
NOT ANSWERED	
NOT ANSWERED	

It is agreed that if I am (we are) the low Bidder(s) on indicated projects, the total value of which is more than the above stipulated award limits, the Board of Transportation will award me (us) projects from among those indicated that have a total value not to exceed the award limit and will result in the lowest total bids to the Department of Transportation.

PROPOSAL: C203253
LETTING: L131015 CALL: 017
VENDOR: 3554 Traffic Control Devices, Inc.

LINE NO.	ITEM NO.	ITEM DESC.	UNIT TYPE	SUBCONTRACTOR QUANTITY	SUBCONTRACTOR UNIT PRICE	EXTENDED AMOUNT
DBE SUBCONTRACTOR: 11479 PRECISION CONTRACTING SERVICES, INC.						
Will Use Quote: Yes						
0083	7980000000-N	GENERIC SIGN	EA	75.000	1035.00000	77625.00

DBE COMMITMENT TOTAL FOR SUBCONTRACTOR: 77,625.00 Committed
DBE COMMITMENT TOTAL FOR VENDOR (SubContractor) 77,625.

TOTAL DBE COMMITMENT FOR VENDOR:

Entered:	3.12%	or	77625.00
Required:	3.00%	or	74564.55

<GOAL MET>

Contract Item Sheets For C203253

Line #	ItemNumber	Sec #	Description	Quantity Unit	Unit Bid Price	Amount Bid
			ROADWAY ITEMS			
0001	0000100000-N	800	MOBILIZATION	Lump Sum LS	124,000.00	124,000.00
0002	2591000000-E	848	4" CONCRETE SIDEWALK	20 SY	126.00	2,520.00
0003	4405000000-E	1110	WORK ZONE SIGNS (PORTABLE)	320 SF	7.00	2,240.00
0004	4410000000-E	1110	WORK ZONE SIGNS (BARRICADE MOUNTED)	143 SF	7.00	1,001.00
0005	4415000000-N	1115	FLASHING ARROW BOARD	2 EA	750.00	1,500.00
0006	4420000000-N	1120	PORTABLE CHANGEABLE MESSAGE SIGN	2 EA	900.00	1,800.00
0007	4430000000-N	1130	DRUMS	60 EA	40.00	2,400.00
0008	4435000000-N	1135	CONES	40 EA	16.00	640.00
0009	4445000000-E	1145	BARRICADES (TYPE III)	80 LF	25.00	2,000.00
0010	4450000000-N	1150	FLAGGER	2,880 HR	12.00	34,560.00
0011	4480000000-N	1165	TMA	2 EA	2,514.00	5,028.00
0012	4510000000-N	SP	LAW ENFORCEMENT	1,440 HR	29.00	41,760.00
0013	4516000000-N	1180	SKINNY DRUM	40 EA	27.50	1,100.00
0014	7000000000-E	1705	PEDESTRIAN SIGNAL HEAD (**", ** SECTION) (16", 1 SECTION W/ COUNTDOWN DARK GREEN FINISH)	26 EA	736.00	19,136.00
0015	7000000000-E	1705	PEDESTRIAN SIGNAL HEAD (**", ** SECTION) (16", 1 SECTION W/ COUNTDOWN)	2 EA	691.00	1,382.00
0016	7060000000-E	1705	SIGNAL CABLE	19,320 LF	1.70	32,844.00
0017	7120000000-E	1705	VEHICLE SIGNAL HEAD (12", 3 SECTION)	85 EA	645.00	54,825.00
0018	7132000000-E	1705	VEHICLE SIGNAL HEAD (12", 4 SECTION)	72 EA	839.00	60,408.00

Contract Item Sheets For C203253

Line #	ItemNumber	Sec #	Description	Quantity Unit	Unit Bid Price	Amount Bid
0019	7144000000-E	1705	VEHICLE SIGNAL HEAD (12", 5 SECTION)	4 EA	1,064.00	4,256.00
0020	7279000000-E	1715	TRACER WIRE	550 LF	0.60	330.00
0021	7300000000-E	1715	UNPAVED TRENCHING (**********) (2, 2")	525 LF	7.90	4,147.50
0022	7301000000-E	1715	DIRECTIONAL DRILL (**********) (2, 2")	670 LF	14.00	9,380.00
0023	7312000000-N	1716	JUNCTION BOX (**********) (OVERSIZED)	3 EA	458.00	1,374.00
0024	7324000000-N	1716	JUNCTION BOX (STANDARD SIZE)	2 EA	255.00	510.00
0025	7420000000-E	1722	2" RISER WITH WEATHERHEAD	2 EA	565.00	1,130.00
0026	7430000000-N	1722	HEAT SHRINK TUBING RETROFIT KIT	2 EA	87.00	174.00
0027	7456000000-E	1726	LEAD-IN CABLE (**********) (14-2)	100 LF	1.80	180.00
0028	7528000000-E	1730	DROP CABLE	700 LF	2.30	1,610.00
0029	7540000000-N	1731	SPLICE ENCLOSURE	9 EA	1,244.00	11,196.00
0030	7566000000-N	1733	DELINEATOR MARKER	1 EA	99.00	99.00
0031	7575142200-N	SP	NEW ELECTRICAL SERVICE	2 EA	1,210.00	2,420.00
0032	7636000000-N	1745	SIGN FOR SIGNALS	9 EA	337.00	3,033.00
0033	7684000000-N	1750	SIGNAL CABINET FOUNDATION	14 EA	1,476.00	20,664.00
0034	7686000000-N	1752	CONDUIT ENTRANCE INTO EXISTING FOUNDATION	2 EA	580.00	1,160.00
0035	7687000000-N	1752	MODIFY FOUNDATION FOR CONTROL-LER CABINET	31 EA	1,110.00	34,410.00
0036	7696000000-N	1751	CONTROLLER WITH CABINET (**********) (2070L 332 BASE MOUNTED, PAINTED FINISH)	12 EA	10,614.00	127,368.00

Contract Item Sheets For C203253

Line #	ItemNumber	Sec #	Description	Quantity Unit	Unit Bid Price	Amount Bid
0037	7780000000-N	1751	DETECTOR CARD (TYPE 2070L)	326 EA	102.00	33,252.00
0038	7901000000-N	1753	CABINET BASE EXTENDER	51 EA	230.00	11,730.00
0039	7901010000-N	1753	CABINET BASE ADAPTER	16 EA	247.00	3,952.00
0040	7980000000-N	SP	GENERIC SIGNAL ITEM 5/8" X 10' GROUNDING ELECTRODE	59 EA	77.00	4,543.00
0041	7980000000-N	SP	GENERIC SIGNAL ITEM 900MHZ ETHERNET RADIO	2 EA	4,552.00	9,104.00
0042	7980000000-N	SP	GENERIC SIGNAL ITEM BACKUP STORAGE SERVER	1 EA	7,338.00	7,338.00
0043	7980000000-N	SP	GENERIC SIGNAL ITEM CABINET BASE ADAPTER (PAINTED FINISH)	1 EA	327.00	327.00
0044	7980000000-N	SP	GENERIC SIGNAL ITEM CABINET BASE EXTENDER (PAINTED FINISH)	7 EA	311.00	2,177.00
0045	7980000000-N	SP	GENERIC SIGNAL ITEM CCTV CONTROL PANEL	1 EA	1,302.00	1,302.00
0046	7980000000-N	SP	GENERIC SIGNAL ITEM CCTV VIDEO SERVER	1 EA	9,719.00	9,719.00
0047	7980000000-N	SP	GENERIC SIGNAL ITEM CCTV WOOD POLE (50')	2 EA	2,594.00	5,188.00
0048	7980000000-N	SP	GENERIC SIGNAL ITEM COMPUTER WORKSTATION	1 EA	7,091.00	7,091.00
0049	7980000000-N	SP	GENERIC SIGNAL ITEM CONTROLLER W/ CABINET & AUX FILE (2070L, 332 BASE MTD, PAINTED FINISH)	6 EA	11,263.00	67,578.00
0050	7980000000-N	SP	GENERIC SIGNAL ITEM CONTROLLER WITH CABINET (2070L, BASE MOUNTED)	13 EA	10,264.00	133,432.00
0051	7980000000-N	SP	GENERIC SIGNAL ITEM CONTROLLER WITH CABINET AND AUX FILE (2070L, 332 BASE MOUNTED)	52 EA	10,912.00	567,424.00

Contract Item Sheets For C203253

Line #	ItemNumber	Sec #	Description	Quantity Unit	Unit Bid Price	Amount Bid
0052	7980000000-N	SP	GENERIC SIGNAL ITEM CONTROLLER WITH RECONFIGURED CABINET (2070L, 332 BASE MOUNTED)	1 EA	10,264.00	10,264.00
0053	7980000000-N	SP	GENERIC SIGNAL ITEM CORE ETHERNET SWITCH	1 EA	72,358.00	72,358.00
0054	7980000000-N	SP	GENERIC SIGNAL ITEM DIGITAL CCTV CAMERA ASSEMBLY	5 EA	4,534.00	22,670.00
0055	7980000000-N	SP	GENERIC SIGNAL ITEM DISTRIBUTED PROCESSING SIGNAL SYSTEM SERVER	1 EA	10,230.00	10,230.00
0056	7980000000-N	SP	GENERIC SIGNAL ITEM ELECTRICAL SERVICE & CABINET FOUNDATION FOR DOWNTOWN TRAF-FIC SIGNAL	10 EA	1,842.00	18,420.00
0057	7980000000-N	SP	GENERIC SIGNAL ITEM EQUIPMENT RACK CABINET	1 EA	2,511.00	2,511.00
0058	7980000000-N	SP	GENERIC SIGNAL ITEM FIELD ETHERNET SWITCH	87 EA	1,145.00	99,615.00
0059	7980000000-N	SP	GENERIC SIGNAL ITEM FURNISH 2070L CONTROLLER	3 EA	1,881.00	5,643.00
0060	7980000000-N	SP	GENERIC SIGNAL ITEM FURNISH AC ISOLATOR CARD	3 EA	39.50	118.50
0061	7980000000-N	SP	GENERIC SIGNAL ITEM FURNISH BASE MOUNT 332 CABINET	2 EA	6,882.00	13,764.00
0062	7980000000-N	SP	GENERIC SIGNAL ITEM FURNISH CCTV ASSEMBLY	1 EA	3,592.00	3,592.00
0063	7980000000-N	SP	GENERIC SIGNAL ITEM FURNISH CCTV TEST CABINET	1 EA	3,326.00	3,326.00
0064	7980000000-N	SP	GENERIC SIGNAL ITEM FURNISH CCTV TEST MONITOR	1 EA	723.00	723.00
0065	7980000000-N	SP	GENERIC SIGNAL ITEM FURNISH CONFLICT MONITOR	3 EA	632.00	1,896.00
0066	7980000000-N	SP	GENERIC SIGNAL ITEM FURNISH CONTROLLER TESTER	1 EA	4,795.00	4,795.00

Contract Item Sheets For C203253

Line #	ItemNumber	Sec #	Description	Quantity Unit	Unit Bid Price	Amount Bid
0067	7980000000-N	SP	GENERIC SIGNAL ITEM FURNISH DC ISOLATOR CARD	3 EA	29.50	88.50
0068	7980000000-N	SP	GENERIC SIGNAL ITEM FURNISH DETECTOR CARD	6 EA	65.50	393.00
0069	7980000000-N	SP	GENERIC SIGNAL ITEM FURNISH FIBER OPTIC INTERCON-NECT CENTER	5 EA	364.00	1,820.00
0070	7980000000-N	SP	GENERIC SIGNAL ITEM FURNISH FIELD ETHERNET SWITCH	10 EA	975.00	9,750.00
0071	7980000000-N	SP	GENERIC SIGNAL ITEM FURNISH FLASH TRANSFER RELAY	4 EA	26.00	104.00
0072	7980000000-N	SP	GENERIC SIGNAL ITEM FURNISH FLASHER MODULE	2 EA	22.50	45.00
0073	7980000000-N	SP	GENERIC SIGNAL ITEM FURNISH LOAD SWITCH	3 EA	21.50	64.50
0074	7980000000-N	SP	GENERIC SIGNAL ITEM FURNISH POLE MOUNT 336 CABINET	1 EA	6,161.00	6,161.00
0075	7980000000-N	SP	GENERIC SIGNAL ITEM FURNISH SIGNAL MONITOR TESTER	1 EA	18,138.00	18,138.00
0076	7980000000-N	SP	GENERIC SIGNAL ITEM FURNISH ST JUMPERS	8 EA	29.00	232.00
0077	7980000000-N	SP	GENERIC SIGNAL ITEM FURNISH ST PIGTAILS	8 EA	14.00	112.00
0078	7980000000-N	SP	GENERIC SIGNAL ITEM FURNISH ST SPLICE CONNECTOR	8 EA	29.00	232.00
0079	7980000000-N	SP	GENERIC SIGNAL ITEM FURNISH ST-LC HYBRID JUMPERS	8 EA	46.50	372.00
0080	7980000000-N	SP	GENERIC SIGNAL ITEM FURNISH SURGE PROTECTOR	10 EA	54.00	540.00
0081	7980000000-N	SP	GENERIC SIGNAL ITEM FURNISH TEST CABINET/CONTROL-LER	1 EA	13,380.00	13,380.00
0082	7980000000-N	SP	GENERIC SIGNAL ITEM INTERCONNECT CENTER (OVER-SIZED)	12 EA	1,822.00	21,864.00

Contract Item Sheets For C203253

Line #	ItemNumber	Sec #	Description	Quantity Unit	Unit Bid Price	Amount Bid
0083	7980000000-N	SP	GENERIC SIGNAL ITEM INTERCONNECT CENTER (STANDARD)	75 EA	1,197.00	89,775.00
0084	7980000000-N	SP	GENERIC SIGNAL ITEM KVM SWITCH	1 EA	1,881.00	1,881.00
0085	7980000000-N	SP	GENERIC SIGNAL ITEM LCD VIDEO MONITOR	4 EA	1,735.00	6,940.00
0086	7980000000-N	SP	GENERIC SIGNAL ITEM MODIFY EXISTING ELECTRICAL SERVICE	17 EA	582.00	9,894.00
0087	7980000000-N	SP	GENERIC SIGNAL ITEM MODIFY EXISTING SPLICE ENCLO-SURE OR INTERCONNECT CENTER	7 EA	1,302.00	9,114.00
0088	7980000000-N	SP	GENERIC SIGNAL ITEM NETWORK ETHERNET SWITCH	1 EA	2,169.00	2,169.00
0089	7980000000-N	SP	GENERIC SIGNAL ITEM NOTEBOOK COMPUTER	3 EA	2,117.00	6,351.00
0090	7980000000-N	SP	GENERIC SIGNAL ITEM POLE MOUNTED CCTV EQUIPMENT CABINET	5 EA	3,390.00	16,950.00
0091	7980000000-N	SP	GENERIC SIGNAL ITEM PRINTER	1 EA	10,590.00	10,590.00
0092	7980000000-N	SP	GENERIC SIGNAL ITEM REMOTE ACCESS SERVER	1 EA	9,353.00	9,353.00
0093	7980000000-N	SP	GENERIC SIGNAL ITEM SIGNAL SYSTEM COMMUNICATIONS SERVER	1 EA	7,338.00	7,338.00
0094	7980000000-N	SP	GENERIC SIGNAL ITEM TERMINAL SPLICE BOX	10 EA	2,538.00	25,380.00
0095	7980000000-N	SP	GENERIC SIGNAL ITEM VIDEO MONITOR PROCESSOR UNIT	1 EA	9,401.00	9,401.00
0096	7980000000-N	SP	GENERIC SIGNAL ITEM VPN FIREWALL	1 EA	2,777.00	2,777.00
0097	7985000000-N	SP	GENERIC SIGNAL ITEM CCTV SYSTEM SOFTWARE	Lump Sum LS	10,847.00	10,847.00
0098	7985000000-N	SP	GENERIC SIGNAL ITEM COMPUTER HARDWARE INTEGRATION	Lump Sum LS	84,542.00	84,542.00

Contract Item Sheets For C203253

Line #	ItemNumber	Sec #	Description	Quantity Unit	Unit Bid Price	Amount Bid
0099	7985000000-N	SP	GENERIC SIGNAL ITEM LAN INTEGRATION	Lump Sum LS	15,186.00	15,186.00
0100	7985000000-N	SP	GENERIC SIGNAL ITEM SIGNAL SYSTEM SOFTWARE	Lump Sum LS	239,016.00	239,016.00
0101	7985000000-N	SP	GENERIC SIGNAL ITEM SYSTEM SUPPORT SOFTWARE	Lump Sum LS	54,554.00	54,554.00
0102	7985000000-N	SP	GENERIC SIGNAL ITEM TRAINING	Lump Sum LS	49,301.00	49,301.00
0103	7990000000-E	SP	GENERIC SIGNAL ITEM ETHERNET CABLE	240 LF	2.55	612.00
0104	7991000000-E	SP	GENERIC SIGNAL ITEM BRICK PAVERS	100 SF	35.50	3,550.00

TOTAL AMOUNT OF BID FOR ENTIRE PROJECT $2,485,485.00

1456/Oct30/Q28397/D763716252200/E104

Contract No. C203253

County Rowan

Rev. 5-19-11

EXECUTION OF CONTRACT
NON-COLLUSION AFFIDAVIT, DEBARMENT CERTIFICATION AND GIFT BAN CERTIFICATION

CORPORATION

The Contractor being duly sworn, solemnly swears (or affirms) that neither he, nor any official, agent or employee has entered into any agreement, participated in any collusion, or otherwise taken any action which is in restraint of free competitive bidding in connection with this Contract, that the Contractor has not been convicted of violating *N.C.G.S. § 133-24* within the last three years, and that the Contractor intends to do the work with its own bonafide employees or subcontractors and did not bid for the benefit of another contractor.

By submitting this Execution of Contract, Non-Collusion Affidavit and Debarment Certification, the Contractor is certifying his status under penalty of perjury under the laws of the United States in accordance with the Debarment Certification attached, provided that the Debarment Certification also includes any required statements concerning exceptions that are applicable.

N.C.G.S. § 133-32 and Executive Order 24 prohibit the offer to, or acceptance by, any State Employee of any gift from anyone with a contract with the State, or from any person seeking to do business with the State. By execution of any response in this procurement, you attest, for your entire organization and its employees or agents, that you are not aware that any such gift has been offered, accepted, or promised by any employees of your organization.

SIGNATURE OF CONTRACTOR

Traffic Control Devices, Inc.

Full name of Corporation

P.O. Box 150418, Altamonte Springs, FL 32715-0418

Address as Prequalified

Attest _____ Secretary/~~Assistant Secretary~~
Select appropriate title

By _____ ~~President~~/Vice President/~~Assistant Vice President~~
Select appropriate title

David K. Wittek

Print or type Signer's name

James C. Breeding

Print or type Signer's name

CORPORATE SEAL

AFFIDAVIT MUST BE NOTARIZED

Subscribed and sworn to before me this the

8th day of November 2013.

Jacqueline M. Mi

Signature of Notary Public

of Seminole County

State of Florida

My Commission Expires: 9/25/15

NOTARY SEAL

Notary Public State of Florida
Jacqueline M Miller
My Commission EE121715
Expires 09/25/2015

Contract No. C203253
County Rowan

Rev. 5-19-11

DEBARMENT CERTIFICATION

Conditions for certification:

1. The prequalified bidder shall provide immediate written notice to the Department if at any time the bidder learns that his certification was erroneous when he submitted his debarment certification or explanation filed with the Department, or has become erroneous because of changed circumstances.

2. The terms *covered transaction, debarred, suspended, ineligible, lower tier covered transaction, participant, person, primary covered transaction, principal, proposal,* and *voluntarily excluded,* as used in this provision, have the meanings set out in the Definitions and Coverage sections of the rules implementing Executive Order 12549. A copy of the Federal Rules requiring this certification and detailing the definitions and coverages may be obtained from the Contract Officer of the Department.

3. The prequalified bidder agrees by submitting this form, that he will not knowingly enter into any lower tier covered transaction with a person who is debarred, suspended, declared ineligible, or voluntarily excluded from participation in NCDOT contracts, unless authorized by the Department.

4. For Federal Aid projects, the prequalified bidder further agrees that by submitting this form he will include the Federal-Aid Provision titled *Required Contract Provisions Federal-Aid Construction Contract (Form FHWA PR* 1273) provided by the Department, without subsequent modification, in all lower tier covered transactions.

5. The prequalified bidder may rely upon a certification of a participant in a lower tier covered transaction that he is not debarred, suspended, ineligible, or voluntarily excluded from the covered transaction, unless he knows that the certification is erroneous. The bidder may decide the method and frequency by which he will determine the eligibility of his subcontractors.

6. Nothing contained in the foregoing shall be construed to require establishment of a system of records in order to render in good faith the certification required by this provision. The knowledge and information of a participant is not required to exceed that which is normally possessed by a prudent person in the ordinary course of business dealings.

7. Except as authorized in paragraph 6 herein, the Department may terminate any contract if the bidder knowingly enters into a lower tier covered transaction with a person who is suspended, debarred, ineligible, or voluntarily excluded from participation in this transaction, in addition to other remedies available by the Federal Government.

Contract No. C203253
County Rowan

Rev. 5-19-11

DEBARMENT CERTIFICATION

The prequalified bidder certifies to the best of his knowledge and belief, that he and his principals:

a. Are not presently debarred, suspended, proposed for debarment, declared ineligible, or voluntarily excluded from covered transactions by any Federal department or agency;

b. Have not within a three-year period preceding this proposal been convicted of or had a civil judgment rendered against them for commission of fraud or a criminal offense in connection with obtaining, attempting to obtain, or performing a public (Federal, State or local) transaction or contract under a public transaction; violation of Federal or State antitrust statutes or commission of embezzlement, theft, forgery, bribery, falsification or destruction of records; making false statements; or receiving stolen property;

c. Are not presently indicted for or otherwise criminally or civilly charged by a governmental entity (Federal, State or local) with commission of any of the offenses enumerated in paragraph b. of this certification; and

d. Have not within a three-year period preceding this proposal had one or more public transactions (Federal, State or local) terminated for cause or default.

e. Will submit a revised Debarment Certification immediately if his status changes and will show in his bid proposal an explanation for the change in status.

If the prequalified bidder cannot certify that he is not debarred, he shall provide an explanation with this submittal. An explanation will not necessarily result in denial of participation in a contract.

Failure to submit a non-collusion affidavit and debarment certification will result in the prequalified bidder's bid being considered non-responsive.

☐ Check here if an explanation is attached to this certification.

Contract No **C203253**
County (ies): **Rowan**

ACCEPTED BY THE
DEPARTMENT OF TRANSPORTATION

Contract Officer

11/18/13
Date

Execution of Contract and Bonds
Approved as to Form:

Attorney General

Contract No. C203253
County Rowan

Rev 5-17-11

BOND No. 105 951 492

CONTRACT PAYMENT BOND

Date of Payment Bond Execution: November 7, 2013

Name of Principal Contractor: Traffic Control Devices, Inc.

Name of Surety: Travelers Casualty and Surety Company of America

Name of Contracting Body: **North Carolina Department of Transportation**

Raleigh, North Carolina

Amount of Bond: Two Million Four Hundred Eighty Five Thousand Four Hundred Eighty Five and No/100ths $2,485,485.00

Contract ID No.: C203253

County Name: Rowan

KNOW ALL MEN BY THESE PRESENTS, That we, the PRINCIPAL CONTRACTOR (hereafter, PRINCIPAL) and SURETY above named, are held and firmly bound unto the above named Contracting Body, hereinafter called the Contracting Body, in the penal sum of the amount stated above for the payment of which sum well and truly to be made, we bind ourselves, our heirs, executors, administrators, and successors, jointly and severally, firmly by these presents.

THE CONDITION OF THIS OBLIGATION IS SUCH, that whereas the principal entered into a certain contract with the Contracting Body, numbered as shown above and hereto attached:

NOW THEREFORE, if the principal shall promptly make payment to all persons supplying labor and material in the prosecution of the work provided for in said contract, and any and all duly authorized modifications of said contract that may hereafter be made, notice of which modifications to the surety being hereby waived, then this obligation to be void; otherwise to remain in full force and virtue.

IN WITNESS WHEREOF, the above-bound parties have executed this instrument under their several seals on the date indicated above, the name and corporate seal of each corporate party being hereto affixed and these presents duly signed by its undersigned representative, pursuant to authority of its governing body.

Contract No. C203253
County Rowan

Rev 5-17-11

CONTRACT PAYMENT BOND

Affix Seal of Surety Company

Travelers Casualty and Surety Company of America
Print or type Surety Company Name

By J. Mark Whitehead, Jr.
Print, stamp or type name of Attorney-in-Fact

Signature of Attorney-in-Fact

Signature of Witness

Lori K. Charles
Print or type Signer's name

One Tower Square, Hartford, CT 06183
Address of Attorney-in-Fact

Contract No. C203253
County Rowan

Rev 5-17-11

CONTRACT PAYMENT BOND

CORPORATION

SIGNATURE OF CONTRACTOR (Principal)

Traffic Control Devices, Inc.

Full name of Corporation

242 N. Westmonte Drive, Altamonte Springs, FL 32714

Address as prequalified

By _____

Signature of ~~President~~, Vice President, ~~Assistant Vice President~~

Select appropriate title

J C BREEDING

Print or type Signer's name

Affix Corporate Seal

Attest _____

Signature of Secretary, ~~Assistant Secretary~~

Select appropriate title

DAVID K WITTEK

Print or type Signer's name

Contract No. C203253
County Rowan

Rev 5-17-11

BOND No. 105 941 492

CONTRACT PERFORMANCE BOND

Date of Performance Bond Execution: November 7, 2013

Name of Principal Contractor: Traffic Control Devices, Inc.

Name of Surety: Travelers Casualty and Surety Company of America

Name of Contracting Body: **North Carolina Department of Transportation**

Raleigh, North Carolina

Amount of Bond: Two Million Four Hundred Eighty Five Thousand Four Hundred Eighty Five and No/100ths $2,485,485.00

Contract ID No.: C203253

County Name: Rowan

KNOW ALL MEN BY THESE PRESENTS, That we, the PRINCIPAL CONTRACTOR (hereafter, PRINCIPAL) and SURETY above named, are held and firmly bound unto the above named Contracting Body, hereinafter called the Contracting Body, in the penal sum of the amount stated above for the payment of which sum well and truly to be made, we bind ourselves, our heirs, executors, administrators, and successors, jointly and severally, firmly by these presents.

THE CONDITION OF THIS OBLIGATION IS SUCH, that whereas the principal entered into a certain contract with the Contracting Body, numbered as shown above and hereto attached:

NOW THEREFORE, if the principal shall well and truly perform and fulfill all the undertakings, covenants, terms, conditions, and agreements of said contract during the original term of said contract and any extensions thereof that may be granted by the Contracting Body, with or without notice to the Surety, and during the life of any guaranty required under the contract, and shall also well and truly perform and fulfill all the undertakings, covenants, terms, conditions, and agreements of any and all duly authorized modifications of said contract that may hereafter be made, notice of which modifications to the surety being hereby waived, then this obligation to be void; otherwise to remain in full force and virtue.

IN WITNESS WHEREOF, the above-bound parties have executed this instrument under their several seals on the date indicated above, the name and corporate seal of each corporate party being hereto affixed and these presents duly signed by its undersigned representative, pursuant to authority of its governing body.

Contract No. C203253
County Rowan

Rev 5-17-11

CONTRACT PERFORMANCE BOND

Affix Seal of Surety Company

Travelers Casualty and Surety Company of America
Print or type Surety Company Name

By J. Mark Whitehead, Jr.
Print, stamp or type name of Attorney-in-Fact

Signature of Attorney-in-Fact

Signature of Witness

Lori K.Charles
Print or type Signer's name

One Tower Square, Hartford, CT 06183
Address of Attorney-in-Fact

Contract No. C203253
County Rowan

Rev 5-17-11

CONTRACT PERFORMANCE BOND

CORPORATION

SIGNATURE OF CONTRACTOR (Principal)

Traffic Control Devices, Inc.

Full name of Corporation

242 N. Westmonte Drive, Altamonte Springs, FL 32714

Address as prequalified

By _____

Signature of ~~President~~, Vice President, ~~Assistant Vice President~~

Select appropriate title

JAMES C. BREEDING

Print or type Signer's name

Affix Corporate Seal

Attest _____

Signature of Secretary, ~~Assistant Secretary~~

Select appropriate title

DAVID K. WITTEK

Print or type Signer's name

TRAVELERS

POWER OF ATTORNEY

Farmington Casualty Company
Fidelity and Guaranty Insurance Company
Fidelity and Guaranty Insurance Underwriters, Inc.
St. Paul Fire and Marine Insurance Company
St. Paul Guardian Insurance Company
St. Paul Mercury Insurance Company
Travelers Casualty and Surety Company
Travelers Casualty and Surety Company of America
United States Fidelity and Guaranty Company

Attorney-In Fact No. 226147

Certificate No. 005355946

KNOW ALL MEN BY THESE PRESENTS: That Farmington Casualty Company, St. Paul Fire and Marine Insurance Company, St. Paul Guardian Insurance Company, St. Paul Mercury Insurance Company, Travelers Casualty and Surety Company, Travelers Casualty and Surety Company of America, and United States Fidelity and Guaranty Company are corporations duly organized under the laws of the State of Connecticut, that Fidelity and Guaranty Insurance Company is a corporation duly organized under the laws of the State of Iowa, and that Fidelity and Guaranty Insurance Underwriters, Inc., is a corporation duly organized under the laws of the State of Wisconsin (herein collectively called the "Companies"), and that the Companies do hereby make, constitute and appoint

J. Mark Whitehead Jr., J. Mark Whitehead Sr., and Lori K. Charles

of the City of Altamonte Springs, State of Florida, their true and lawful Attorney(s)-in-Fact, each in their separate capacity if more than one is named above, to sign, execute, seal and acknowledge any and all bonds, recognizances, conditional undertakings and other writings obligatory in the nature thereof on behalf of the Companies in their business of guaranteeing the fidelity of persons, guaranteeing the performance of contracts and executing or guaranteeing bonds and undertakings required or permitted in any actions or proceedings allowed by law.

WARNING: THIS POWER OF ATTORNEY IS INVALID WITHOUT THE RED BORDER

IN WITNESS WHEREOF, the Companies have caused this instrument to be signed and their corporate seals to be hereto affixed, this 1st day of February, 2013.

Farmington Casualty Company
Fidelity and Guaranty Insurance Company
Fidelity and Guaranty Insurance Underwriters, Inc.
St. Paul Fire and Marine Insurance Company
St. Paul Guardian Insurance Company
St. Paul Mercury Insurance Company
Travelers Casualty and Surety Company
Travelers Casualty and Surety Company of America
United States Fidelity and Guaranty Company

State of Connecticut
City of Hartford ss.

By: _____
Robert L. Raney, Senior Vice President

On this the 1st day of February, 2013, before me personally appeared Robert L. Raney, who acknowledged himself to be the Senior Vice President of Farmington Casualty Company, Fidelity and Guaranty Insurance Company, Fidelity and Guaranty Insurance Underwriters, Inc., St. Paul Fire and Marine Insurance Company, St. Paul Guardian Insurance Company, St. Paul Mercury Insurance Company, Travelers Casualty and Surety Company, Travelers Casualty and Surety Company of America, and United States Fidelity and Guaranty Company, and that he, as such, being authorized so to do, executed the foregoing instrument for the purposes therein contained by signing on behalf of the corporations by himself as a duly authorized officer.

In Witness Whereof, I hereunto set my hand and official seal.
My Commission expires the 30th day of June, 2016.

Marie C. Tetreault, Notary Public

58440-8-12 Printed in U.S.A.

This Power of Attorney is granted under and by the authority of the following resolutions adopted by the Boards of Directors of Farmington Casualty Company, Fidelity and Guaranty Insurance Company, Fidelity and Guaranty Insurance Underwriters, Inc., St. Paul Fire and Marine Insurance Company, St. Paul Guardian Insurance Company, St. Paul Mercury Insurance Company, Travelers Casualty and Surety Company, Travelers Casualty and Surety Company of America, and United States Fidelity and Guaranty Company, which resolutions are now in full force and effect, reading as follows:

RESOLVED, that the Chairman, the President, any Vice Chairman, any Executive Vice President, any Senior Vice President, any Vice President, any Second Vice President, the Treasurer, any Assistant Treasurer, the Corporate Secretary or any Assistant Secretary may appoint Attorneys-in-Fact and Agents to act for and on behalf of the Company and may give such appointee such authority as his or her certificate of authority may prescribe to sign with the Company's name and seal with the Company's seal bonds, recognizances, contracts of indemnity, and other writings obligatory in the nature of a bond, recognizance, or conditional undertaking, and any of said officers or the Board of Directors at any time may remove any such appointee and revoke the power given him or her; and it is

FURTHER RESOLVED, that the Chairman, the President, any Vice Chairman, any Executive Vice President, any Senior Vice President or any Vice President may delegate all or any part of the foregoing authority to one or more officers or employees of this Company, provided that each such delegation is in writing and a copy thereof is filed in the office of the Secretary; and it is

FURTHER RESOLVED, that any bond, recognizance, contract of indemnity, or writing obligatory in the nature of a bond, recognizance, or conditional undertaking shall be valid and binding upon the Company when (a) signed by the President, any Vice Chairman, any Executive Vice President, any Senior Vice President or any Vice President, any Second Vice President, the Treasurer, any Assistant Treasurer, the Corporate Secretary or any Assistant Secretary and duly attested and sealed with the Company's seal by a Secretary or Assistant Secretary; or (b) duly executed (under seal, if required) by one or more Attorneys-in-Fact and Agents pursuant to the power prescribed in his or her certificate or their certificates of authority or by one or more Company officers pursuant to a written delegation of authority; and it is

FURTHER RESOLVED, that the signature of each of the following officers: President, any Executive Vice President, any Senior Vice President, any Vice President, any Assistant Vice President, any Secretary, any Assistant Secretary, and the seal of the Company may be affixed by facsimile to any Power of Attorney or to any certificate relating thereto appointing Resident Vice Presidents, Resident Assistant Secretaries or Attorneys-in-Fact for purposes only of executing and attesting bonds and undertakings and other writings obligatory in the nature thereof, and any such Power of Attorney or certificate bearing such facsimile signature or facsimile seal shall be valid and binding upon the Company and any such power so executed and certified by such facsimile signature and facsimile seal shall be valid and binding on the Company in the future with respect to any bond or understanding to which it is attached.

I, Kevin E. Hughes, the undersigned, Assistant Secretary, of Farmington Casualty Company, Fidelity and Guaranty Insurance Company, Fidelity and Guaranty Insurance Underwriters, Inc., St. Paul Fire and Marine Insurance Company, St. Paul Guardian Insurance Company, St. Paul Mercury Insurance Company, Travelers Casualty and Surety Company, Travelers Casualty and Surety Company of America, and United States Fidelity and Guaranty Company do hereby certify that the above and foregoing is a true and correct copy of the Power of Attorney executed by said Companies, which is in full force and effect and has not been revoked.

WARNING: THIS POWER OF ATTORNEY IS INVALID WITHOUT THE RED BORDER

IN TESTIMONY WHEREOF, I have hereunto set my hand and affixed the seals of said Companies this 7 day of November, 20 13.

Kevin E. Hughes, Assistant Secretary

To verify the authenticity of this Power of Attorney, call 1-800-421-3880 or contact us at www.travelersbond.com. Please refer to the Attorney-In-Fact number, the above-named individuals and the details of the bond to which the power is attached.