STATE OF NORTH CAROLINA
DEPARTMENT OF TRANSPORTATION
RALEIGH, N.C.

C203175

CONTRACT AND
CONTRACT BONDS

FOR CONTRACT NO. C203175

WBS	34762.3.4 STP-0086(5)
T.I.P NO.	U-624
COUNTY OF	ORANGE
THIS IS THE	ROADWAY CONTRACT
ROUTE NUMBER	NC 86 LENGTH 0.748 MILES
LOCATION	NC-86 (S COLUMBIA ST) FROM SR-1906 (PUREFOY RD) TO SR-1902 (MANNING DR).
CONTRACTOR	TRIANGLE GRADING & PAVING, INC
ADDRESS	P.O. BOX 2570 BURLINGTON, NC 272162750
BIDS OPENED	OCTOBER 16, 2012
CONTRACT EXECUTION	NOV 0 8 2012

STATE OF NORTH CAROLINA
DEPARTMENT OF TRANSPORTATION
RALEIGH, N.C.

PROPOSAL

DATE AND TIME OF BID OPENING: **OCTOBER 16, 2012 AT 2:00 PM**

CONTRACT ID	C203175
WBS	34762.3.4
FEDERAL-AID NO.	STP-0086(5)
COUNTY	ORANGE
T.I.P. NO.	U-624
MILES	0.748
ROUTE NO.	NC 86
LOCATION	NC-86 (S COLUMBIA ST) FROM SR-1906 (PUREFOY RD) TO SR-1902 (MANNING DR).
TYPE OF WORK	WIDENING, GRADING, DRAINAGE, PAVING, AND SIGNALS.

NOTICE:

ALL BIDDERS SHALL COMPLY WITH ALL APPLICABLE LAWS REGULATING THE PRACTICE OF GENERAL CONTRACTING AS CONTAINED IN CHAPTER 87 OF THE GENERAL STATUTES OF NORTH CAROLINA WHICH REQUIRES THE BIDDER TO BE LICENSED BY THE N.C. LICENSING BOARD FOR CONTRACTORS WHEN BIDDING ON ANY NON-FEDERAL AID PROJECT WHERE THE BID IS $30,000 OR MORE, EXCEPT FOR CERTAIN SPECIALTY WORK AS DETERMINED BY THE LICENSING BOARD. BIDDERS SHALL ALSO COMPLY WITH ALL OTHER APPLICABLE LAWS REGULATING THE PRACTICES OF ELECTRICAL, PLUMBING, HEATING AND AIR CONDITIONING AND REFRIGERATION CONTRACTING AS CONTAINED IN CHAPTER 87 OF THE GENERAL STATUTES OF NORTH CAROLINA. NOT WITHSTANDING THESE LIMITATIONS ON BIDDING, THE BIDDER WHO IS AWARDED ANY PROJECT SHALL COMPLY WITH CHAPTER 87 OF THE GENERAL STATUTES OF NORTH CAROLINA FOR LICENSING REQUIREMENTS WITHIN 60 CALENDAR DAYS OF BID OPENING, REGARDLESS OF FUNDING SOURCES.

BIDS WILL BE RECEIVED AS SHOWN BELOW:

THIS IS A <u>ROADWAY</u> PROPOSAL

5% BID BOND OR BID DEPOSIT REQUIRED

PROPOSAL FOR THE CONSTRUCTION OF

CONTRACT No. C203175 IN ORANGE COUNTY, NORTH CAROLINA

Date_____ 20____

DEPARTMENT OF TRANSPORTATION,

RALEIGH, NORTH CAROLINA

The Bidder has carefully examined the location of the proposed work to be known as Contract No. **C203175**; has carefully examined the plans and specifications, which are acknowledged to be part of the proposal, the special provisions, the proposal, the form of contract, and the forms of contract payment bond and contract performance bond; and thoroughly understands the stipulations, requirements and provisions. The undersigned bidder agrees to bound upon his execution of the bid and subsequent award to him by the Board of Transportation in accordance with this proposal to provide the necessary contract payment bond and contract performance bond within fourteen days after the written notice of award is received by him. The undersigned Bidder further agrees to provide all necessary machinery, tools, labor, and other means of construction; and to do all the work and to furnish all materials, except as otherwise noted, necessary to perform and complete the said contract in accordance with *the 2012 Standard Specifications for Roads and Structures* by the dates(s) specified in the Project Special Provisions and in accordance with the requirements of the Engineer, and at the unit or lump sum prices, as the case may be, for the various items given on the sheets contained herein.

The Bidder shall provide and furnish all the materials, machinery, implements, appliances and tools, and perform the work and required labor to construct and complete State Highway Contract No. **C203175** in **Orange County**, for the unit or lump sum prices, as the case may be, bid by the Bidder in his bid and according to the proposal, plans, and specifications prepared by said Department, which proposal, plans, and specifications show the details covering this project, and hereby become a part of this contract.

The published volume entitled *North Carolina Department of Transportation, Raleigh, Standard Specifications for Roads and Structures, January 2012* with all amendments and supplements thereto, is by reference incorporated into and made a part of this contract; that, except as herein modified, all the construction and work included in this contract is to be done in accordance with the specifications contained in said volume, and amendments and supplements thereto, under the direction of the Engineer.

If the proposal is accepted and the award is made, the contract is valid only when signed either by the Contract Officer or such other person as may be designated by the Secretary to sign for the Department of Transportation. The conditions and provisions herein cannot be changed except over the signature of the said Contract Officer.

The quantities shown in the itemized proposal for the project are considered to be approximate only and are given as the basis for comparison of bids. The Department of Transportation may increase or decrease the quantity of any item or portion of the work as may be deemed necessary or expedient.

An increase or decrease in the quantity of an item will not be regarded as sufficient ground for an increase or decrease in the unit prices, nor in the time allowed for the completion of the work, except as provided for the contract.

Accompanying this bid is a bid bond secured by a corporate surety, or certified check payable to the order of the Department of Transportation, for five percent of the total bid price, which deposit is to be forfeited as liquidated damages in case this bid is accepted and the Bidder shall fail to provide the required payment and performance bonds with the Department of Transportation, under the condition of this proposal, within 14 calendar days after the written notice of award is received by him, as provided in the *Standard Specifications*; otherwise said deposit will be returned to the Bidder.

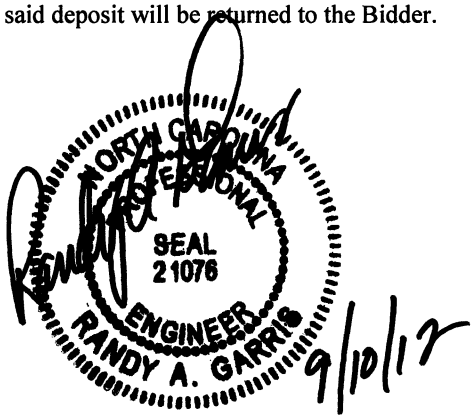

State Contract Officer

TABLE OF CONTENTS

COVER SHEET
PROPOSAL SHEET

PROJECT SPECIAL PROVISIONS

CONTRACT TIME AND LIQUIDATED DAMAGES:....1
INTERMEDIATE CONTRACT TIME NUMBER 1 AND LIQUIDATED DAMAGES:....1
INTERMEDIATE CONTRACT TIME NUMBER 2 AND LIQUIDATED DAMAGES:....2
INTERMEDIATE CONTRACT TIME NUMBER 3 AND LIQUIDATED DAMAGES:....3
INTERMEDIATE CONTRACT TIME NUMBER 4 AND LIQUIDATED DAMAGES:....4
INTERMEDIATE CONTRACT TIME NUMBER 5 AND LIQUIDATED DAMAGES:....4
INTERMEDIATE CONTRACT TIME NUMBER 6 AND LIQUIDATED DAMAGES:....4
PERMANENT VEGETATION ESTABLISHMENT:....5
MAJOR CONTRACT ITEMS:....5
SPECIALTY ITEMS:....5
FUEL PRICE ADJUSTMENT:....6
SCHEDULE OF ESTIMATED COMPLETION PROGRESS:....6
DISADVANTAGED BUSINESS ENTERPRISE:....7
CERTIFICATION FOR FEDERAL-AID CONTRACTS:....20
CONTRACTOR'S LICENSE REQUIREMENTS:....20
U.S. DEPARTMENT OF TRANSPORTATION HOTLINE:....20
SUBSURFACE INFORMATION:....21
LOCATING EXISTING UNDERGROUND UTILITIES:....21
MAINTENANCE OF THE PROJECT:....21
TWELVE MONTH GUARANTEE:....22
GIFTS FROM VENDORS AND CONTRACTORS:....22
EROSION AND SEDIMENT CONTROL/STORMWATER CERTIFICATION:....23
PROCEDURE FOR MONITORING BORROW PIT DISCHARGE:....28
NOTES TO CONTRACTOR:....30
EMPLOYMENT:....30
STATE HIGHWAY ADMINISTRATOR TITLE CHANGE:....31
ROADWAY....32
UTILITY CONSTRUCTION....60
UTILITIES BY OTHERS....61
EROSION CONTROL....63
SIGNALS AND INTELLIGENT TRANSPORTATION SYSTEMS....76

PERMITS....P-1

STANDARD SPECIAL PROVISIONS

AVAILABILITY OF FUNDS – TERMINATION OF CONTRACTS....1
NCDOT GENERAL SEED SPECIFICATION FOR SEED QUALITY....2
ERRATA....5
PLANT AND PEST QUARANTINES....7
AWARD OF CONTRACT....8
MINORITY AND FEMALE EMPLOYMENT REQUIREMENTS....9

REQUIRED CONTRACT PROVISIONS FEDERAL - AID CONSTRUCTION CONTRACTS 12
ON-THE-JOB TRAINING 21
MINIMUM WAGES 24

PROPOSAL ITEM SHEET AND SIGNATURE SHEET

ITEM SHEET(S) (TAN SHEETS)
SIGNATURE SHEET (BID ACCEPTANCE BY DEPARTMENT)

PROJECT SPECIAL PROVISIONS

GENERAL

CONTRACT TIME AND LIQUIDATED DAMAGES:

(8-15-00) (Rev. 12-18-07) 108 SP1 G07 A

The date of availability for this contract is **November 26, 2012**, except that work in jurisdictional waters and wetlands shall not begin until a meeting between the DOT, Regulatory Agencies, and the Contractor is held as stipulated in the permits contained elsewhere in this proposal. This delay in availability has been considered in determining the contract time for this project.

The completion date for this contract is **December 28, 2014**.

Except where otherwise provided by the contract, observation periods required by the contract will not be a part of the work to be completed by the completion date and/or intermediate contract times stated in the contract. The acceptable completion of the observation periods that extend beyond the final completion date shall be a part of the work covered by the performance and payment bonds.

The liquidated damages for this contract are **Two Hundred Dollars ($200.00)** per calendar day. These liquidated damages will not be cumulative with any liquidated damages which may become chargeable under Intermediate Contract Time Number 1.

INTERMEDIATE CONTRACT TIME NUMBER 1 AND LIQUIDATED DAMAGES:

(7-1-95) (Rev. 2-21-12) 108 SP1 G13 A

Except for that work required under the Project Special Provisions entitled *Planting, Reforestation* and/or *Permanent Vegetation Establishment*, included elsewhere in this proposal, the Contractor will be required to complete all work included in this contract and shall place and maintain traffic on same.

The date of availability for this intermediate contract time is **November 26, 2012**.

The completion date for this intermediate contract time is **July 1, 2014**.

The liquidated damages for this intermediate contract time are **One Thousand Dollars ($1,000.00)** per calendar day.

Upon apparent completion of all the work required to be completed by this intermediate date, a final inspection will be held in accordance with Article 105-17 and upon acceptance, the Department will assume responsibility for the maintenance of all work except *Planting, Reforestation* and/or *Permanent Vegetation Establishment*. The Contractor will be responsible for and shall make corrections of all damages to the completed roadway caused by his planting operations, whether occurring prior to or after placing traffic through the project.

INTERMEDIATE CONTRACT TIME NUMBER 2 AND LIQUIDATED DAMAGES:
(2-20-07) 108 SP1 G14 A

The Contractor shall complete the required work of installing, maintaining, and removing the traffic control devices for lane closures and restoring traffic to **a 2-lane, 2-way** traffic pattern. The Contractor shall not close or narrow a lane of traffic on **-L- (NC 86) and all Y-lines** during the following time restrictions:

DAY AND TIME RESTRICTIONS

Monday through Sunday
7:00 A.M. to 9:00 A.M.
4:00 P.M. to 6:00 P.M.

In addition, the Contractor shall not close or narrow a lane of traffic on **-L- (NC 86) and all Y-lines**, detain and/or alter the traffic flow on or during holidays, holiday weekends, special events, or any other time when traffic is unusually heavy, including the following schedules:

HOLIDAY AND HOLIDAY WEEKEND LANE CLOSURE RESTRICTIONS

1. For **unexpected occurrence** that creates unusually high traffic volumes, as directed by the Engineer.

2. For **New Year's Day**, between the hours of **7:00 a.m.** December 31st and **6:00 p.m.** January 2nd. If New Year's Day is on a Friday, Saturday, Sunday or Monday, then until **6:00 p.m.** the following Tuesday.

3. For **Easter**, between the hours of **7:00 a.m.** Thursday and **6:00 p.m.** Monday.

4. For **Memorial Day**, between the hours of **7:00 a.m.** Friday and **6:00 p.m.** Tuesday.

5. For **Independence Day**, between the hours of **7:00 a.m.** the day before Independence Day and **6:00 p.m.** the day after Independence Day.

   If **Independence Day** is on a Friday, Saturday, Sunday or Monday, then between the hours of **7:00 a.m.** the Thursday before Independence Day and **6:00 p.m.** the Tuesday after Independence Day.

6. For **Labor Day**, between the hours of **7:00 a.m.** Friday and **6:00 p.m.** Tuesday.

7. For **Thanksgiving Day**, between the hours of **7:00 a.m.** Tuesday and **6:00 p.m.** Monday.

8. For **Christmas**, between the hours of **7:00 a.m.** the Friday before the week of Christmas Day and **6:00 p.m.** the following Tuesday after the week of Christmas Day.

9. **For UNC-Chapel Hill football and basketball games occurring at UNC-Chapel Hill Campus, between 2 hours before the start and 2 hours after the end of the UNC-Chapel Hill football and basketball games.**

Holidays and holiday weekends shall include New Year's, Easter, Memorial Day, Independence Day, Labor Day, Thanksgiving, and Christmas. The Contractor shall schedule his work so that lane closures will not be required during these periods, unless otherwise directed by the Engineer.

The time of availability for this intermediate contract work shall be the time the Contractor begins to install all traffic control devices for lane closures according to the time restrictions listed herein.

The completion time for this intermediate contract work shall be the time the Contractor is required to complete the removal of all traffic control devices for lane closures according to the time restrictions stated above and place traffic in **a 2-lane, 2-way** pattern.

The liquidated damages are **Five Hundred Dollars ($500.00)** per **fifteen (15) minutes**.

INTERMEDIATE CONTRACT TIME NUMBER 3 AND LIQUIDATED DAMAGES:
(2-20-07) 108 SP1 G14 E

The Contractor shall complete the required work of installing, maintaining and removing the traffic control devices for road closures and restoring traffic to **a 2-lane, 2-way** traffic pattern. The Contractor shall not close **any roads** during the following time restrictions:

DAY AND TIME RESTRICTIONS

Monday through Sunday
7:00 A.M. to 9:00 A.M.
4:00 P.M. to 6:00 P.M.

The maximum allowable time for road closures for **installing drainage structures and pipes crossing the road and the installation of signals** is **fifteen (15)** minutes for **any roads**. The Contractor shall reopen the travel lanes to traffic until the existing traffic queue is depleted.

This road closure is only applicable on -L- (NC 86) when traffic is in a two-lane/two-way pattern; traffic stoppage will not be allowed on -L- (NC 86) from Station 11+50± to Station 40+00± when traffic is in a one-lane/one-way pattern.

The time of availability for this intermediate contract time will be the time the Contractor begins to install traffic control devices required for the road closures according to the time restrictions stated herein.

The completion time for this intermediate contract time will be the time the Contractor is required to complete the removal of traffic control devices required for the road closures according to the time restrictions stated herein and restore traffic to **a 2-lane, 2-way** traffic pattern.

The liquidated damages are **One Thousand Dollars ($1,000.00)** per **fifteen (15)**-minute time period.

These liquidated damages shall not be cumulative with any damages charged under Intermediate Contract Time Number 2.

INTERMEDIATE CONTRACT TIME NUMBER 4 AND LIQUIDATED DAMAGES:
(2-20-07) 108 SP1 G14 H

The Contractor shall complete the work required of **Phase I, Steps 3 thru 9** as shown on **Sheet TMP-3** and shall place and maintain traffic on same.

The date of availability for this intermediate contract time **will be April 1, 2013.**

The completion for this intermediate contract time **will be September 30, 2013.**

Lane closure time restrictions for -L- (NC 86) (including holidays and special events) do not apply during this intermediate contract time.

No traffic stoppage will be allowed on -L- (NC 86) from Station 11+50± to Station 40+00± during this intermediate contract time.

The liquidated damages are **One Thousand Dollars ($1,000.00)** per calendar day.

INTERMEDIATE CONTRACT TIME NUMBER 5 AND LIQUIDATED DAMAGES:
(2-20-07) 108 SP1 G14 F

The Contractor shall complete the work required of **Phase I, Step 5** as shown on **Sheet TMP-3** and shall place and maintain traffic on same.

The time of availability for this intermediate contract time **will be 7:00 A.M. on the Sunday** the Contractor elects to begin the work.

The completion time for this intermediate contract time **will be the time which is fourteen (14) consecutive hours after the time of availability**.

The liquidated damages are **Five Hundred Dollars ($500.00)** per **fifteen (15) minutes**.

INTERMEDIATE CONTRACT TIME NUMBER 6 AND LIQUIDATED DAMAGES:
(2-20-07) 108 SP1 G14 F

The Contractor shall complete the work required of **Phase I, Step 7** as shown on **Sheet TMP-3** and shall place and maintain traffic on same.

The time of availability for this intermediate contract time **will be 7:00 A.M. on the Sunday** the Contractor elects to begin the work.

The completion time for this intermediate contract time **will be the time which is fourteen (14) consecutive hours after the time of availability**.

The liquidated damages are **Five Hundred Dollars ($500.00)** per **fifteen (15) minutes**.

PERMANENT VEGETATION ESTABLISHMENT:
(2-16-12) 104 SP1 G16

Establish a permanent stand of the vegetation mixture shown in the contract. During the period between initial vegetation planting and final project acceptance, perform all work necessary to establish 80% coverage of permanent vegetation within the project limits, as well as, in borrow and waste pits. This work shall include erosion control device maintenance and installation, repair seeding and mulching, supplemental seeding and mulching, mowing, and fertilizer topdressing, as directed. All work shall be performed in accordance with the applicable section of the *2012 Standard Specifications*.

Once the Engineer has determined that 80% coverage of permanent vegetation has been established, the Contractor will be notified to remove the remaining erosion control devices that are no longer needed. The Contractor will be responsible for, and shall correct any areas disturbed by operations performed in permanent vegetation establishment and the removal of temporary erosion control measures, whether occurring prior to or after placing traffic on the project.

Payment for *Response for Erosion Control, Seeding and Mulching, Repair Seeding, Supplemental Seeding, Mowing, Fertilizer Topdressing, Silt Excavation,* and *Stone for Erosion Control* will be made at contract unit prices for the affected items. Work required that is not represented by contract line items will be paid in accordance with Articles 104-7 or 104-3 of the *2012 Standard Specifications*. No additional compensation will be made for maintenance and removal of temporary erosion control items.

MAJOR CONTRACT ITEMS:
(2-19-02) 104 SP1 G28

The following listed items are the major contract items for this contract (see Article 104-5 of the *2012 Standard Specifications*):

Line #	Description
36	Asphalt Concrete Base Course, Type B25.0B
37	Asphalt Concrete Intermediate Course, Type I19.0B

SPECIALTY ITEMS:
(7-1-95)(Rev. 1-17-12) 108-6 SP1 G37

Items listed below will be the specialty items for this contract (see Article 108-6 of the *2012 Standard Specifications*).

Line #	Description
68	Fencing
72 thru 76	Signing
89 thru 94	Long-Life Pavement Markings
105 thru 119	Utility Construction
120 thru 143	Erosion Control
144 thru 169	Signals/ITS System

FUEL PRICE ADJUSTMENT:
(11-15-05) (Rev. 1-17-12) 109-8 SP1 G43

Revise the *2012 Standard Specifications* as follows:

Page 1-83, Article 109-8, Fuel Price Adjustments, add the following:

The base index price for DIESEL #2 FUEL is **$ 3.4238** per gallon. Where any of the following are included as pay items in the contract, they will be eligible for fuel price adjustment.

The pay items and the fuel factor used in calculating adjustments to be made will be as follows:

Description	Units	Fuel Usage Factor Diesel
Unclassified Excavation	Gal/CY	0.29
Borrow Excavation	Gal/CY	0.29
Class IV Subgrade Stabilization	Gal/Ton	0.55
Aggregate Base Course	Gal/Ton	0.55
Asphalt Concrete Base Course, Type ____	Gal/Ton	2.90
Asphalt Concrete Intermediate Course, Type ____	Gal/Ton	2.90
Asphalt Concrete Surface Course, Type ____	Gal/Ton	2.90
Open-Graded Asphalt Friction Course	Gal/Ton	2.90
Sand Asphalt Surface Course, Type ____	Gal/Ton	2.90
Aggregate for Cement Treated Base Course	Gal/Ton	0.55
Portland Cement for Cement Treated Base Course	Gal/Ton	0.55
__" Portland Cement Concrete Pavement	Gal/SY	0.245
Concrete Shoulders Adjacent to __" Pavement	Gal/SY	0.245

SCHEDULE OF ESTIMATED COMPLETION PROGRESS:
(7-15-08) (Rev. 6-19-12) 108-2 SP1 G58

The Contractor's attention is directed to the Standard Special Provision entitled *Availability of Funds Termination of Contracts* included elsewhere in this proposal. The Department of Transportation's schedule of estimated completion progress for this project as required by that Standard Special Provision is as follows:

	Fiscal Year	Progress (% of Dollar Value)
2013	(7/01/12 - 6/30/13)	50% of Total Amount Bid
2014	(7/01/13 - 6/30/14)	50% of Total Amount Bid

The Contractor shall also furnish his own progress schedule in accordance with Article 108-2 of the *2012 Standard Specifications*. Any acceleration of the progress as shown by the Contractor's progress schedule over the progress as shown above shall be subject to the approval of the Engineer.

DISADVANTAGED BUSINESS ENTERPRISE:
(10-16-07)(Rev. 1-17-12) 102-15(J) SP1 G61

Description

The purpose of this Special Provision is to carry out the U.S. Department of Transportation's policy of ensuring nondiscrimination in the award and administration of contracts financed in whole or in part with Federal funds. This provision is guided by 49 CFR Part 26.

Definitions

Additional DBE Subcontractors - Any DBE submitted at the time of bid that will not be used to meet the DBE goal. No submittal of a Letter of Intent is required.

Committed DBE Subcontractor - Any DBE submitted at the time of bid that is being used to meet the DBE goal by submission of a Letter of Intent. Or any DBE used as a replacement for a previously committed DBE firm.

Contract Goal Requirement - The approved DBE participation at time of award, but not greater than the advertised contract goal.

DBE Goal - A portion of the total contract, expressed as a percentage, that is to be performed by committed DBE subcontractor(s).

Disadvantaged Business Enterprise (DBE) - A firm certified as a Disadvantaged Business Enterprise through the North Carolina Unified Certification Program.

Goal Confirmation Letter - Written documentation from the Department to the bidder confirming the Contractor's approved, committed DBE participation along with a listing of the committed DBE firms.

Manufacturer - A firm that operates or maintains a factory or establishment that produces on the premises, the materials or supplies obtained by the Contractor.

Regular Dealer - A firm that owns, operates, or maintains a store, warehouse, or other establishment in which the materials or supplies required for the performance of the contract are bought, kept in stock, and regularly sold to the public in the usual course of business. A regular dealer engages in, as its principal business and in its own name, the purchase and sale or lease of the products in question. A regular dealer in such bulk items as steel, cement, gravel, stone, and petroleum products need not keep such products in stock, if it owns and operates distribution equipment for the products. Brokers and packagers are not regarded as manufacturers or regular dealers within the meaning of this section.

North Carolina Unified Certification Program (NCUCP) - A program that provides comprehensive services and information to applicants for DBE certification, such that an applicant is required to apply only once for a DBE certification that will be honored by all

recipients of USDOT funds in the state and not limited to the Department of Transportation only. The Certification Program is in accordance with 49 CFR Part 26.

United States Department of Transportation (USDOT) - Federal agency responsible for issuing regulations (49 CFR Part 26) and official guidance for the DBE program.

Forms and Websites Referenced in this Provision

DBE Payment Tracking System - On-line system in which the Contractor enters the payments made to DBE subcontractors who have performed work on the project. https://apps.dot.state.nc.us/Vendor/PaymentTracking/

DBE-IS *Subcontractor Payment Information* - Form for reporting the payments made to all DBE firms working on the project. This form is for paper bid projects only. http://www.ncdot.org/doh/forms/files/DBE-IS.xls

RF-1 *DBE Replacement Request Form* - Form for replacing a committed DBE. https://apps.dot.state.nc.us/_includes/download/external.html?pdf=http%3A//www.ncdot.gov/doh/forms/files/RF-1.pdf

SAF *Subcontract Approval Form* - Form required for approval to sublet the contract. http://www.ncdot.org/doh/operations/dp_chief_eng/constructionunit/saf.xls

JC-1 *Joint Check Notification Form* - Form and procedures for joint check notification. The form acts as a written joint check agreement among the parties providing full and prompt disclosure of the expected use of joint checks. https://apps.dot.state.nc.us/_includes/download/external.html?pdf=http%3A//www.ncdot.gov/doh/forms/files/JC-1.pdf

Letter of Intent - Form signed by the Contractor and the DBE subcontractor, manufacturer or regular dealer that affirms that a portion of said contract is going to be performed by the signed DBE for the amount listed at the time of bid. http://www.ncdot.org/doh/preconstruct/ps/contracts/letterofintent.pdf

Listing of DBE Subcontractors Form - Form for entering DBE subcontractors on a project that will meet this DBE goal. This form is for paper bids only. http://www.ncdot.gov/doh/preconstruct/ps/word/MISC2.doc

Subcontractor Quote Comparison Sheet - Spreadsheet for showing all subcontractor quotes in the work areas where DBEs quoted on the project. This sheet is submitted with good faith effort packages. http://www.ncdot.gov/business/ocs/goodfaith/excel/Ex_Subcontractor_Quote_Comparison.xls

DBE Goal

The following DBE goal for participation by Disadvantaged Business Enterprises is established for this contract:

Disadvantaged Business Enterprises **13.0 %**

(A) *If the DBE goal is more than zero*, the Contractor shall exercise all necessary and reasonable steps to ensure that DBEs participate in at least the percent of the contract as set forth above as the DBE goal.

(B) *If the DBE goal is zero*, the Contractor shall make an effort to recruit and use DBEs during the performance of the contract. Any DBE participation obtained shall be reported to the Department.

Directory of Transportation Firms (Directory)

Real-time information is available about firms doing business with the Department and firms that are certified through NCUCP in the Directory of Transportation Firms. Only firms identified in the Directory as DBE certified shall be used to meet the DBE goal. The Directory can be found at the following link. https://partner.ncdot.gov/VendorDirectory/default.html

The listing of an individual firm in the directory shall not be construed as an endorsement of the firm's capability to perform certain work.

Listing of DBE Subcontractors

At the time of bid, bidders shall submit all DBE participation that they anticipate to use during the life of the contract. Only those identified to meet the DBE goal will be considered committed, even though the listing shall include both committed DBE subcontractors and additional DBE subcontractors. Additional DBE subcontractor participation submitted at the time of bid will be used toward the Department's overall race-neutral goal. Only those firms with current DBE certification at the time of bid opening will be acceptable for listing in the bidder's submittal of DBE participation. The Contractor shall indicate the following required information:

(A) Electronic Bids

Bidders shall submit a listing of DBE participation in the appropriate section of Expedite, the bidding software of Bid Express®.

(1) Submit the names and addresses of DBE firms identified to participate in the contract. If the bidder uses the updated listing of DBE firms shown in Expedite, the bidder may use the dropdown menu to access the name and address of the DBE firm.

(2) Submit the contract line numbers of work to be performed by each DBE firm. When no figures or firms are entered, the bidder will be considered to have no DBE participation.

(3) The bidder shall be responsible for ensuring that the DBE is certified at the time of bid by checking the Directory of Transportation Firms. If the firm is not certified at the time of the bid-letting, that DBE's participation will not count towards achieving the DBE goal.

(B) Paper Bids

Blank forms will not be deemed to represent zero participation. Bids submitted that do not have DBE participation indicated on the appropriate form will not be read publicly during the opening of bids. The Department will not consider these bids for award and the proposal will be rejected.

(1) *If the DBE goal is more than zero,*

(a) Bidders, at the time the bid proposal is submitted, shall submit a listing of DBE participation, including the names and addresses on *Listing of DBE Subcontractors* contained elsewhere in the contract documents in order for the bid to be considered responsive. Bidders shall indicate the total dollar value of the DBE participation for the contract.

(b) If bidders have no DBE participation, they shall indicate this on the *Listing of DBE Subcontractors* by entering the word "None" or the number "0." This form shall be completed in its entirety.

(c) The bidder shall be responsible for ensuring that the DBE is certified at the time of bid by checking the Directory of Transportation Firms. If the firm is not certified at the time of the bid-letting, that DBE's participation will not count towards achieving the DBE goal.

(2) *If the DBE goal is zero,* bidders, at the time the bid proposal is submitted, shall enter the word "None"; or the number "0"; or if there is participation, add the value on the *Listing of DBE Subcontractors* contained elsewhere in the contract documents.

DBE Prime Contractor

When a certified DBE firm bids on a contract that contains a DBE goal, the DBE firm is responsible for meeting the goal or making good faith efforts to meet the goal, just like any other bidder. In most cases, a DBE bidder on a contract will meet the DBE goal by virtue of the work it performs on the contract with its own forces. However, all the work that is performed by the DBE bidder and any other DBE subcontractors will count toward the DBE goal. The DBE bidder shall list itself along with any DBE subcontractors, if any, in order to receive credit toward the DBE goal.

For example, if the DBE goal is 45% and the DBE bidder will only perform 40% of the contract work, the prime will list itself at 40%, and the additional 5% shall be obtained through additional DBE participation with DBE subcontractors or documented through a good faith effort.

DBE prime contractors shall also follow Sections A and B listed under *Listing of DBE Subcontractor* just as a non-DBE bidder would.

Written Documentation – Letter of Intent

The bidder shall submit written documentation for each DBE that will be used to meet the DBE goal of the contract, indicating the bidder's commitment to use the DBE in the contract. This documentation shall be submitted on the Department's form titled *Letter of Intent*.

The documentation shall be received in the office of the State Contractor Utilization Engineer or at DBE@ncdot.gov no later than 12:00 noon of the sixth calendar day following opening of bids, unless the sixth day falls on an official state holiday. In that situation, it is due in the office of the State Contractor Utilization Engineer no later than 12:00 noon on the next official state business day.

If the bidder fails to submit the Letter of Intent from each committed DBE to be used toward the DBE goal, or if the form is incomplete (i.e. both signatures are not present), the DBE participation will not count toward meeting the DBE goal. If the lack of this participation drops the commitment below the DBE goal, the Contractor shall submit evidence of good faith efforts, completed in its entirety, to the State Contractor Utilization Engineer or DBE@ncdot.gov no later than 12:00 noon on the eighth calendar day following opening of bids, unless the eighth day falls on an official state holiday. In that situation, it is due in the office of the State Contractor Utilization Engineer no later than 12:00 noon on the next official state business day.

Submission of Good Faith Effort

If the bidder fails to meet or exceed the DBE goal, the apparent lowest responsive bidder shall submit to the Department documentation of adequate good faith efforts made to reach the DBE goal.

A hard copy and an electronic copy of this information shall be received in the office of the State Contractor Utilization Engineer or at DBE@ncdot.gov no later than 12:00 noon of the sixth calendar day following opening of bids unless the sixth day falls on an official state holiday. In that situation, it is due in the office of the State Contractor Utilization Engineer the next official state business day. If the contractor cannot send the information electronically, then one complete set and 9 copies of this information shall be received under the same time constraints above.

Note: Where the information submitted includes repetitious solicitation letters, it will be acceptable to submit a representative letter along with a distribution list of the firms that were solicited. Documentation of DBE quotations shall be a part of the good faith effort submittal.

This documentation may include written subcontractor quotations, telephone log notations of verbal quotations, or other types of quotation documentation.

Consideration of Good Faith Effort for Projects with DBE Goals More Than Zero

Adequate good faith efforts mean that the bidder took all necessary and reasonable steps to achieve the goal which, by their scope, intensity, and appropriateness, could reasonably be expected to obtain sufficient DBE participation. Adequate good faith efforts also mean that the bidder actively and aggressively sought DBE participation. Mere *pro forma* efforts are not considered good faith efforts.

The Department will consider the quality, quantity, and intensity of the different kinds of efforts a bidder has made. Listed below are examples of the types of actions a bidder will take in making a good faith effort to meet the goal and are not intended to be exclusive or exhaustive, nor is it intended to be a mandatory checklist.

(A) Soliciting through all reasonable and available means (e.g. attendance at pre-bid meetings, advertising and/or written notices through the use of the NCDOT Directory of Transportation Firms) the interest of all certified DBEs who have the capability to perform the work of the contract. The bidder must solicit this interest within at least 10 days prior to bid opening to allow the DBEs to respond to the solicitation. Solicitation shall provide the opportunity to DBEs within the Division and surrounding Divisions where the project is located. The bidder must determine with certainty if the DBEs are interested by taking appropriate steps to follow up initial solicitations.

(B) Selecting portions of the work to be performed by DBEs in order to increase the likelihood that the DBE goals will be achieved. This includes, where appropriate, breaking out contract work items into economically feasible units to facilitate DBE participation, even when the prime contractor might otherwise prefer to perform these work items with its own forces.

(C) Providing interested DBEs with adequate information about the plans, specifications, and requirements of the contract in a timely manner to assist them in responding to a solicitation.

(D) (1) Negotiating in good faith with interested DBEs. It is the bidder's responsibility to make a portion of the work available to DBE subcontractors and suppliers and to select those portions of the work or material needs consistent with the available DBE subcontractors and suppliers, so as to facilitate DBE participation. Evidence of such negotiation includes the names, addresses, and telephone numbers of DBEs that were considered; a description of the information provided regarding the plans and specifications for the work selected for subcontracting; and evidence as to why additional agreements could not be reached for DBEs to perform the work.

(2) A bidder using good business judgment would consider a number of factors in negotiating with subcontractors, including DBE subcontractors, and would take a firm's price and capabilities as well as contract goals into consideration. However, the fact that there may be some additional costs involved in finding and using DBEs is not in itself sufficient reason for a bidder's failure to meet the contract DBE goal, as long as such costs are reasonable. Also, the ability or desire of a prime contractor to perform the work of a contract with its own organization does not relieve the bidder of the responsibility to make good faith efforts. Bidding contractors are not, however, required to accept higher quotes from DBEs if the price difference is excessive or unreasonable.

(E) Not rejecting DBEs as being unqualified without sound reasons based on a thorough investigation of their capabilities. The bidder's standing within its industry, membership in specific groups, organizations, or associates and political or social affiliations (for example, union vs. non-union employee status) are not legitimate causes for the rejection or non-solicitation of bids in the bidder's efforts to meet the project goal.

(F) Making efforts to assist interested DBEs in obtaining bonding, lines of credit, or insurance as required by the recipient or bidder.

(G) Making efforts to assist interested DBEs in obtaining necessary equipment, supplies, materials, or related assistance or services.

(H) Effectively using the services of available minority/women community organizations; minority/women contractors' groups; Federal, State, and local minority/women business assistance offices; and other organizations as allowed on a case-by-case basis to provide assistance in the recruitment and placement of DBEs. Contact within 7 days from the bid opening the Business Development Manager in the Business Opportunity and Work Force Development Unit to give notification of the bidder's inability to get DBE quotes.

(I) Any other evidence that the bidder submits which shows that the bidder has made reasonable good faith efforts to meet the DBE goal.

In addition, the Department may take into account the following:

(1) Whether the bidder's documentation reflects a clear and realistic plan for achieving the DBE goal.

(2) The bidders' past performance in meeting the DBE goals.

(3) The performance of other bidders in meeting the DBE goal. For example, when the apparent successful bidder fails to meet the DBE goal, but others meet it, you may reasonably raise the question of whether, with additional reasonable efforts the apparent successful bidder could have met the goal. If the apparent successful bidder fails to meet the DBE goal, but meets or exceeds the average DBE participation obtained by other bidders, the Department may view this,

in conjunction with other factors, as evidence of the apparent successful bidder having made a good faith effort.

If the Department does not award the contract to the apparent lowest responsive bidder, the Department reserves the right to award the contract to the next lowest responsive bidder that can satisfy to the Department that the DBE goal can be met or that an adequate good faith effort has been made to meet the DBE goal.

Non-Good Faith Appeal

The State Contractor Utilization Engineer will notify the contractor verbally and in writing of non-good faith. A contractor may appeal a determination of non-good faith made by the Goal Compliance Committee. If a contractor wishes to appeal the determination made by the Committee, they shall provide written notification to the State Contractual Services Engineer or at DBE@ncdot.gov. The appeal shall be made within 2 business days of notification of the determination of non-good faith.

Counting DBE Participation Toward Meeting DBE Goal

(A) Participation

The total dollar value of the participation by a committed DBE will be counted toward the contract goal requirement. The total dollar value of participation by a committed DBE will be based upon the value of work actually performed by the DBE and the actual payments to DBE firms by the Contractor.

(B) Joint Checks

Prior notification of joint check use shall be required when counting DBE participation for services or purchases that involves the use of a joint check. Notification shall be through submission of Form JC-1 *(Joint Check Notification Form)* and the use of joint checks shall be in accordance with the Department's Joint Check Procedures.

(C) Subcontracts (Non-Trucking)

A DBE may enter into subcontracts. Work that a DBE subcontracts to another DBE firm may be counted toward the contract goal requirement. Work that a DBE subcontracts to a non-DBE firm does <u>not</u> count toward the contract goal requirement. If a DBE contractor or subcontractor subcontracts a significantly greater portion of the work of the contract than would be expected on the basis of standard industry practices, it shall be presumed that the DBE is not performing a commercially useful function. The DBE may present evidence to rebut this presumption to the Department. The Department's decision on the rebuttal of this presumption is subject to review by the Federal Highway Administration but is not administratively appealable to USDOT.

(D) Joint Venture

When a DBE performs as a participant in a joint venture, the Contractor may count toward its contract goal requirement a portion of the total value of participation with the DBE in the joint venture, that portion of the total dollar value being a distinct clearly defined portion of work that the DBE performs with its forces.

(E) Suppliers

A contractor may count toward its DBE requirement 60 percent of its expenditures for materials and supplies required to complete the contract and obtained from a DBE regular dealer and 100 percent of such expenditures from a DBE manufacturer.

(F) Manufacturers and Regular Dealers

A contractor may count toward its DBE requirement the following expenditures to DBE firms that are not manufacturers or regular dealers:

(1) The fees or commissions charged by a DBE firm for providing a *bona fide* service, such as professional, technical, consultant, or managerial services, or for providing bonds or insurance specifically required for the performance of a DOT-assisted contract, provided the fees or commissions are determined to be reasonable and not excessive as compared with fees and commissions customarily allowed for similar services.

(2) With respect to materials or supplies purchased from a DBE, which is neither a manufacturer nor a regular dealer, count the entire amount of fees or commissions charged for assistance in the procurement of the materials and supplies, or fees or transportation charges for the delivery of materials or supplies required on a job site (but not the cost of the materials and supplies themselves), provided the fees are determined to be reasonable and not excessive as compared with fees customarily allowed for similar services.

Commercially Useful Function

(A) DBE Utilization

The Contractor may count toward its contract goal requirement only expenditures to DBEs that perform a commercially useful function in the work of a contract. A DBE performs a commercially useful function when it is responsible for execution of the work of the contract and is carrying out its responsibilities by actually performing, managing, and supervising the work involved. To perform a commercially useful function, the DBE shall also be responsible with respect to materials and supplies used on the contract, for negotiating price, determining quality and quantity, ordering the material and installing (where applicable) and paying for the material itself. To determine whether a DBE is performing a commercially useful function, the Department will

evaluate the amount of work subcontracted, industry practices, whether the amount the firm is to be paid under the contract is commensurate with the work it is actually performing and the DBE credit claimed for its performance of the work, and any other relevant factors.

(B) DBE Utilization in Trucking

The following factors will be used to determine if a DBE trucking firm is performing a commercially useful function:

(1) The DBE shall be responsible for the management and supervision of the entire trucking operation for which it is responsible on a particular contract, and there shall not be a contrived arrangement for the purpose of meeting DBE goals.

(2) The DBE shall itself own and operate at least one fully licensed, insured, and operational truck used on the contract.

(3) The DBE receives credit for the total value of the transportation services it provides on the contract using trucks it owns, insures, and operates using drivers it employs.

(4) The DBE may subcontract the work to another DBE firm, including an owner-operator who is certified as a DBE. The DBE who subcontracts work to another DBE receives credit for the total value of the transportation services the subcontracted DBE provides on the contract.

(5) The DBE may also subcontract the work to a non-DBE firm, including from an owner-operator. The DBE who subcontracts the work to a non-DBE is entitled to credit for the total value of transportation services provided by the non-DBE subcontractor not to exceed the value of transportation services provided by DBE-owned trucks on the contract. Additional participation by non-DBE subcontractors receives credit only for the fee or commission it receives as a result of the subcontract arrangement. The value of services performed under subcontract agreements between the DBE and the Contractor will not count towards the DBE contract requirement.

(6) A DBE may lease truck(s) from an established equipment leasing business open to the general public. The lease must indicate that the DBE has exclusive use of and control over the truck. This requirement does not preclude the leased truck from working for others during the term of the lease with the consent of the DBE, so long as the lease gives the DBE absolute priority for use of the leased truck. This type of lease may count toward the DBE's credit as long as the driver is under the DBE's payroll.

(7) Subcontracted/leased trucks shall display clearly on the dashboard the name of the DBE that they are subcontracted/leased to and their own company name if it is not identified on the truck itself. Magnetic door signs are not permitted.

DBE Replacement

When a Contractor has relied on a commitment to a DBE firm (or an approved substitute DBE firm) to meet all or part of a contract goal requirement, the contractor shall not terminate the DBE for convenience. This includes, but is not limited to, instances in which the Contractor seeks to perform the work of the terminated subcontractor with another DBE subcontractor, a non-DBE subcontractor, or with the Contractor's own forces or those of an affiliate. A DBE may only be terminated after receiving the Engineer's written approval based upon a finding of good cause for the termination.

All requests for replacement of a committed DBE firm shall be submitted to the Engineer for approval on Form RF-1 *(DBE Replacement Request).* If the Contractor fails to follow this procedure, the Contractor may be disqualified from further bidding for a period of up to 6 months.

The Contractor shall comply with the following for replacement of a committed DBE:

(A) Performance Related Replacement

When a committed DBE is terminated for good cause as stated above, an additional DBE that was submitted at the time of bid may be used to fulfill the DBE commitment. A good faith effort will only be required for removing a committed DBE if there were no additional DBEs submitted at the time of bid to cover the same amount of work as the DBE that was terminated.

If a replacement DBE is not found that can perform at least the same amount of work as the terminated DBE, the Contractor shall submit a good faith effort documenting the steps taken. Such documentation shall include, but not be limited to, the following:

(1) Copies of written notification to DBEs that their interest is solicited in contracting the work defaulted by the previous DBE or in subcontracting other items of work in the contract.

(2) Efforts to negotiate with DBEs for specific subbids including, at a minimum:

(a) The names, addresses, and telephone numbers of DBEs who were contacted.
(b) A description of the information provided to DBEs regarding the plans and specifications for portions of the work to be performed.

(3) A list of reasons why DBE quotes were not accepted.

(4) Efforts made to assist the DBEs contacted, if needed, in obtaining bonding or insurance required by the Contractor.

(B) Decertification Replacement

(1) When a committed DBE is decertified by the Department after the SAF (*Subcontract Approval Form*) has been received by the Department, the Department will not require the Contractor to solicit replacement

DBE participation equal to the remaining work to be performed by the decertified firm. The participation equal to the remaining work performed by the decertified firm will count toward the contract goal requirement.

(2) When a committed DBE is decertified prior to the Department receiving the SAF (*Subcontract Approval Form*) for the named DBE firm, the Contractor shall take all necessary and reasonable steps to replace the DBE subcontractor with another DBE subcontractor to perform at least the same amount of work to meet the DBE goal requirement. If a DBE firm is not found to do the same amount of work, a good faith effort must be submitted to NCDOT (see A herein for required documentation).

Changes in the Work

When the Engineer makes changes that result in the reduction or elimination of work to be performed by a committed DBE, the Contractor will not be required to seek additional participation. When the Engineer makes changes that result in additional work to be performed by a DBE based upon the Contractor's commitment, the DBE shall participate in additional work to the same extent as the DBE participated in the original contract work.

When the Engineer makes changes that result in extra work, which has more than a minimal impact on the contract amount, the Contractor shall seek additional participation by DBEs unless otherwise approved by the Engineer.

When the Engineer makes changes that result in an alteration of plans or details of construction, and a portion or all of the work had been expected to be performed by a committed DBE, the Contractor shall seek participation by DBEs unless otherwise approved by the Engineer.

When the Contractor requests changes in the work that result in the reduction or elimination of work that the Contractor committed to be performed by a DBE, the Contractor shall seek additional participation by DBEs equal to the reduced DBE participation caused by the changes.

Reports and Documentation

A SAF (*Subcontract Approval Form*) shall be submitted for all work which is to be performed by a DBE subcontractor. The Department reserves the right to require copies of actual subcontract agreements involving DBE subcontractors.

When using transportation services to meet the contract commitment, the Contractor shall submit a proposed trucking plan in addition to the SAF. The plan shall be submitted prior to beginning construction on the project. The plan shall include the names of all trucking firms proposed for use, their certification type(s), the number of trucks owned by the firm, as well as the individual truck identification numbers, and the line item(s) being performed.

Within 30 calendar days of entering into an agreement with a DBE for materials, supplies or services, not otherwise documented by the SAF as specified above, the Contractor shall

furnish the Engineer a copy of the agreement. The documentation shall also indicate the percentage (60% or 100%) of expenditures claimed for DBE credit.

Reporting Disadvantaged Business Enterprise Participation

The Contractor shall provide the Engineer with an accounting of payments made to all DBE firms, including material suppliers and contractors at all levels (prime, subcontractor, or second tier subcontractor). This accounting shall be furnished to the Engineer for any given month by the end of the following month. Failure to submit this information accordingly may result in the following action:

(A) Withholding of money due in the next partial pay estimate; or

(B) Removal of an approved contractor from the prequalified bidders' list or the removal of other entities from the approved subcontractors list.

While each contractor (prime, subcontractor, 2nd tier subcontractor) is responsible for accurate accounting of payments to DBEs, it shall be the prime contractor's responsibility to report all monthly and final payment information in the correct reporting manner.

Failure on the part of the Contractor to submit the required information in the time frame specified may result in the disqualification of that contractor and any affiliate companies from further bidding until the required information is submitted.

Failure on the part of any subcontractor to submit the required information in the time frame specified may result in the disqualification of that contractor and any affiliate companies from being approved for work on future DOT projects until the required information is submitted.

Contractors reporting transportation services provided by non-DBE lessees shall evaluate the value of services provided during the month of the reporting period only.

At any time, the Engineer can request written verification of subcontractor payments.

(A) Electronic Bids Reporting

The Contractor shall report the accounting of payments through the Department's DBE Payment Tracking System.

(B) Paper Bids Reporting

The Contractor shall report the accounting of payments on the Department's DBE-IS *(Subcontractor Payment Information)* with each invoice. Invoices will not be processed for payment until the DBE-IS is received.

Failure to Meet Contract Requirements

Failure to meet contract requirements in accordance with Subarticle 102-15(J) of the *2012 Standard Specifications* may be cause to disqualify the Contractor.

CERTIFICATION FOR FEDERAL-AID CONTRACTS:
(3-21-90) SP1 G85

The prospective participant certifies, by signing and submitting this bid or proposal, to the best of his or her knowledge and belief, that:

(A) No Federal appropriated funds have been paid or will be paid, by or on behalf of the undersigned, to any person for influencing or attempting to influence an officer or employee of any Federal agency, a Member of Congress, an officer or employee of Congress, or an employee of a Member of Congress in connection with the awarding of any Federal contract, the making of any Federal grant, the making of any Federal loan, the entering into of any cooperative agreement, and the extension, continuation, renewal, amendment, or modification of any Federal contract, grant, loan, or cooperative agreement.

(B) If any funds other than Federal appropriated funds have been paid or will be paid to any person for influencing or attempting to influence an officer or employee of any Federal agency, a Member of Congress, an officer or employee of Congress, or an employee of a Member of Congress in connection with this Federal contract, grant, loan, or cooperative agreement, the undersigned shall complete and submit Standard Form-LLL, *Disclosure Form to Report Lobbying*, in accordance with its instructions.

This certification is a material representation of fact upon which reliance was placed when this transaction was made or entered into. Submission of this certification is a prerequisite for making or entering into this transaction imposed by *Section 1352, Title 31, U.S. Code*. Any person who fails to file the required certification shall be subject to a civil penalty of not less than $10,000 and not more than $100,000 for each such failure.

The prospective participant also agrees by submitting his or her bid or proposal that he or she shall require that the language of this certification be included in all lower tier subcontracts, which exceed $100,000 and that all such subrecipients shall certify and disclose accordingly.

CONTRACTOR'S LICENSE REQUIREMENTS:
(7-1-95) 102-14 SP1 G88

If the successful bidder does not hold the proper license to perform any plumbing, heating, air conditioning, or electrical work in this contract, he will be required to sublet such work to a contractor properly licensed in accordance with *Article 2 of Chapter 87 of the General Statutes* (licensing of heating, plumbing, and air conditioning contractors) and *Article 4 of Chapter 87* of the *General Statutes* (licensing of electrical contractors).

U.S. DEPARTMENT OF TRANSPORTATION HOTLINE:
(11-22-94) 108-5 SP1 G100

To report bid rigging activities call: **1-800-424-9071**

The U.S. Department of Transportation (DOT) operates the above toll-free hotline Monday through Friday, 8:00 a.m. to 5:00 p.m. eastern time. Anyone with knowledge of possible bid

rigging, bidder collusion, or other fraudulent activities should use the hotline to report such activities.

The hotline is part of the DOT's continuing effort to identify and investigate highway construction contract fraud and abuse is operated under the direction of the DOT Inspector General. All information will be treated confidentially and caller anonymity will be respected.

SUBSURFACE INFORMATION:
(7-1-95) 450 SP1 G112 B

Subsurface information is available on the roadway portion of this project only.

LOCATING EXISTING UNDERGROUND UTILITIES:
(3-20-12) 105 SP1 G115

Revise the *2012 Standard Specifications* as follows:

Page 1-43, Article 105-8, line 28, after the first sentence, add the following:

Identify excavation locations by means of pre-marking with white paint, flags, or stakes or provide a specific written description of the location in the locate request.

MAINTENANCE OF THE PROJECT:
(11-20-07) (Rev. 1-17-12) 104-10 SP1 G125

Revise the *2012 Standard Specifications* as follows:

Page 1-35, Article 104-10 Maintenance of the Project, line 25, add the following after the first sentence of the first paragraph:

All guardrail/guiderail within the project limits shall be included in this maintenance.

Page 1-35, Article 104-10 Maintenance of the Project, line 30, add the following as the last sentence of the first paragraph:

The Contractor shall perform weekly inspections of guardrail and guiderail and shall report damages to the Engineer on the same day of the weekly inspection. *Where damaged guardrail or guiderail is repaired or replaced as a result of maintaining the project in* accordance with this article, such repair or replacement shall be performed within 7 consecutive calendar days of such inspection report.

Page 1-35, Article 104-10 Maintenance of the Project, lines 42-44, replace the last sentence of the last paragraph with the following:

The Contractor will not be directly compensated for any maintenance operations necessary, except for maintenance of guardrail/guiderail, as this work will be considered incidental to the work covered by the various contract items. The provisions of Article 104-7, Extra Work, and Article 104-8, Compensation and Record Keeping will apply to authorized maintenance of

guardrail/guiderail. Performance of weekly inspections of guardrail/guiderail, and the damage reports required as described above, will be considered to be an incidental part of the work being paid for by the various contract items.

TWELVE MONTH GUARANTEE:
(7-15-03) 108 SP1 G145

(A) The Contractor shall guarantee materials and workmanship against latent and patent defects arising from faulty materials, faulty workmanship or negligence for a period of twelve months following the date of final acceptance of the work for maintenance and shall replace such defective materials and workmanship without cost to the Department. The Contractor will not be responsible for damage due to faulty design, normal wear and tear, for negligence on the part of the Department, and/or for use in excess of the design.

(B) Where items of equipment or material carry a manufacturer's guarantee for any period in excess of twelve months, then the manufacturer's guarantee shall apply for that particular piece of equipment or material. The Department's first remedy shall be through the manufacturer although the Contractor is responsible for invoking the warranted repair work with the manufacturer. The Contractor's responsibility shall be limited to the term of the manufacturer's guarantee. NCDOT would be afforded the same warranty as provided by the Manufacturer.

This guarantee provision shall be invoked only for major components of work in which the Contractor would be wholly responsible for under the terms of the contract. Examples would include pavement structures, bridge components, and sign structures. This provision will not be used as a mechanism to force the Contractor to return to the project to make repairs or perform additional work that the Department would normally compensate the Contractor for. In addition, routine maintenance activities (i.e. mowing grass, debris removal, ruts in earth shoulders,) are not parts of this guarantee.

Appropriate provisions of the payment and/or performance bonds shall cover this guarantee for the project.

To ensure uniform application statewide the Division Engineer will forward details regarding the circumstances surrounding any proposed guarantee repairs to the Chief Engineer for review and approval prior to the work being performed.

GIFTS FROM VENDORS AND CONTRACTORS:
(12-15-09) 107-1 SP1 G152

By Executive Order 24, issued by Governor Perdue, and *N.C.G.S.§ 133-32,* it is unlawful for any vendor or contractor (i.e. architect, bidder, contractor, construction manager, design professional, engineer, landlord, offeror, seller, subcontractor, supplier, or vendor), to make gifts or to give favors to any State employee of the Governor's Cabinet Agencies (i.e. Administration, Commerce, Correction, Crime Control and Public Safety, Cultural Resources, Environment and

Natural Resources, Health and Human Services, Juvenile Justice and Delinquency Prevention, Revenue, Transportation, and the Office of the Governor). This prohibition covers those vendors and contractors who:

(A) Have a contract with a governmental agency; or
(B) Have performed under such a contract within the past year; or
(C) Anticipate bidding on such a contract in the future.

For additional information regarding the specific requirements and exemptions, vendors and contractors are encouraged to review Executive Order 24 and *N.C.G.S. § 133-32.*

Executive Order 24 also encouraged and invited other State Agencies to implement the requirements and prohibitions of the Executive Order to their agencies. Vendors and contractors should contact other State Agencies to determine if those agencies have adopted Executive Order 24.

EROSION AND SEDIMENT CONTROL/STORMWATER CERTIFICATION:
(1-16-07) (Rev 9-18-12) 105-16, 225-2, 16 SP1 G180

General

Schedule and conduct construction activities in a manner that will minimize soil erosion and the resulting sedimentation and turbidity of surface waters. Comply with the requirements herein regardless of whether or not a National Pollution discharge Elimination System (NPDES) permit for the work is required.

Establish a chain of responsibility for operations and subcontractors' operations to ensure that the *Erosion and Sediment Control/Stormwater Pollution Prevention Plan* is implemented and maintained over the life of the contract.

(A) *Certified Supervisor* - Provide a certified Erosion and Sediment Control/Stormwater Supervisor to manage the Contractor and subcontractor operations, insure compliance with Federal, State and Local ordinances and regulations, and manage the Quality Control Program.

(B) *Certified Foreman* - Provide a certified, trained foreman for each construction operation that increases the potential for soil erosion or the possible sedimentation and turbidity of surface waters.

(C) *Certified Installer* - Provide a certified installer to install or direct the installation for erosion or sediment/stormwater control practices.

(D) *Certified Designer* - Provide a certified designer for the design of the erosion and sediment control/stormwater component of reclamation plans and, if applicable, for the design of the project erosion and sediment control/stormwater plan.

Roles and Responsibilities

(A) *Certified Erosion and Sediment Control/Stormwater Supervisor* - The Certified Supervisor shall be Level II and responsible for ensuring the erosion and sediment control/stormwater plan is adequately implemented and maintained on the project and for conducting the quality control program. The Certified Supervisor shall be on the project within 24 hours notice from initial exposure of an erodible surface to the project's final acceptance. Perform the following duties:

(1) Manage Operations - Coordinate and schedule the work of subcontractors so that erosion and sediment control/stormwater measures are fully executed for each operation and in a timely manner over the duration of the contract.

(a) Oversee the work of subcontractors so that appropriate erosion and sediment control/stormwater preventive measures are conformed to at each stage of the work.
(b) Prepare the required National Pollutant Discharge Elimination System (NPDES) Inspection Record and submit to the Engineer.
(c) Attend all weekly or monthly construction meetings to discuss the findings of the NPDES inspection and other related issues.
(d) Implement the erosion and sediment control/stormwater site plans requested.
(e) Provide any needed erosion and sediment control/stormwater practices for the Contractor's temporary work not shown on the plans, such as, but not limited to work platforms, temporary construction, pumping operations, plant and storage yards, and cofferdams.
(f) Acquire applicable permits and comply with requirements for borrow pits, dewatering, and any temporary work conducted by the Contractor in jurisdictional areas.
(g) Conduct all erosion and sediment control/stormwater work in a timely and workmanlike manner.
(h) Fully perform and install erosion and sediment control/stormwater work prior to any suspension of the work.
(i) Coordinate with Department, Federal, State and Local Regulatory agencies on resolution of erosion and sediment control/stormwater issues due to the Contractor's operations.
(j) Ensure that proper cleanup occurs from vehicle tracking on paved surfaces or any location where sediment leaves the Right-of-Way.
(k) Have available a set of erosion and sediment control/stormwater plans that are initialed and include the installation date of Best Management Practices. These practices shall include temporary and permanent groundcover and be properly updated to reflect necessary plan and field changes for use and review by Department personnel as well as regulatory agencies.

(2) Requirements set forth under the NPDES Permit - The Department's NPDES Stormwater permit (NCS000250) outlines certain objectives and management measures pertaining to construction activities. The permit references *NCG010000, General Permit to Discharge Stormwater* under the NPDES, and states that the Department shall incorporate the applicable requirements into its delegated Erosion and Sediment Control Program for construction activities disturbing one or more acres of land. The Department further incorporates these requirements on all contracted bridge and culvert work at jurisdictional waters, regardless of size. Some of the requirements are, but are not limited to:

(a) Control project site waste to prevent contamination of surface or ground waters of the state, i.e. from equipment operation/maintenance, construction materials, concrete washout, chemicals, litter, fuels, lubricants, coolants, hydraulic fluids, any other petroleum products, and sanitary waste.

(b) Inspect erosion and sediment control/stormwater devices and stormwater discharge outfalls at least once every 7 calendar days, twice weekly for construction related *Federal Clean Water Act, Section 303(d)* impaired streams with turbidity violations, and within 24 hours after a significant rainfall event of 0.5 inch that occurs within a 24 hour period.

(c) Maintain an onsite rain gauge or use the Department's Multi-Sensor Precipitation Estimate website to maintain a daily record of rainfall amounts and dates.

(d) Maintain erosion and sediment control/stormwater inspection records for review by Department and Regulatory personnel upon request.

(e) Implement approved reclamation plans on all borrow pits, waste sites and staging areas.

(f) Maintain a log of turbidity test results as outlined in the Department's Procedure for Monitoring Borrow Pit Discharge.

(g) Provide secondary containment for bulk storage of liquid materials.

(h) Provide training for employees concerning general erosion and sediment control/stormwater awareness, the Department's NPDES Stormwater Permit NCS000250 requirements, and the applicable requirements of the *General Permit, NCG010000.*

(i) Report violations of the NPDES permit to the Engineer immediately who will notify the Division of Water Quality Regional Office within 24 hours of becoming aware of the violation.

(3) Quality Control Program - Maintain a quality control program to control erosion, prevent sedimentation and follow provisions/conditions of permits. The quality control program shall:

(a) Follow permit requirements related to the Contractor and subcontractors' construction activities.

(b) Ensure that all operators and subcontractors on site have the proper erosion and sediment control/stormwater certification.

(c) Notify the Engineer when the required certified erosion and sediment control/stormwater personnel are not available on the job site when needed.
(d) Conduct the inspections required by the NPDES permit.
(e) Take corrective actions in the proper timeframe as required by the NPDES permit for problem areas identified during the NPDES inspections.
(f) Incorporate erosion control into the work in a timely manner and stabilize disturbed areas with mulch/seed or vegetative cover on a section-by-section basis.
(g) Use flocculants approved by state regulatory authorities where appropriate and where required for turbidity and sedimentation reduction.
(h) Ensure proper installation and maintenance of temporary erosion and sediment control devices.
(i) Remove temporary erosion or sediment control devices when they are no longer necessary as agreed upon by the Engineer.
(j) The Contractor's quality control and inspection procedures shall be subject to review by the Engineer. Maintain NPDES inspection records and make records available at all times for verification by the Engineer.

(B) *Certified Foreman* - At least one Certified Foreman shall be onsite for each type of work listed herein during the respective construction activities to control erosion, prevent sedimentation and follow permit provisions:

(1) Foreman in charge of grading activities
(2) Foreman in charge of bridge or culvert construction over jurisdictional areas
(3) Foreman in charge of utility activities

The Contractor may request to use the same person as the Level II Supervisor and Level II Foreman. This person shall be onsite whenever construction activities as described above are taking place. This request shall be approved by the Engineer prior to work beginning.

The Contractor may request to name a single Level II Foreman to oversee multiple construction activities on small bridge or culvert replacement projects. This request shall be approved by the Engineer prior to work beginning.

(C) *Certified Installers* - Provide at least one onsite, Level I Certified Installer for each of the following erosion and sediment control/stormwater crew:

(1) Seeding and Mulching
(2) Temporary Seeding
(3) Temporary Mulching
(4) Sodding
(5) Silt fence or other perimeter erosion/sediment control device installations
(6) Erosion control blanket installation
(7) Hydraulic tackifier installation

(8) Turbidity curtain installation
(9) Rock ditch check/sediment dam installation
(10) Ditch liner/matting installation
(11) Inlet protection
(12) Riprap placement
(13) Stormwater BMP installations (such as but not limited to level spreaders, retention/detention devices)
(14) Pipe installations within jurisdictional areas

If a Level I *Certified Installer* is not onsite, the Contractor may substitute a Level II Foreman for a Level I Installer, provided the Level II Foreman is not tasked to another crew requiring Level II Foreman oversight.

(D) *Certified Designer* - Include the certification number of the Level III-B Certified Designer on the erosion and sediment control/stormwater component of all reclamation plans and if applicable, the certification number of the Level III-A Certified Designer on the design of the project erosion and sediment control/stormwater plan.

Preconstruction Meeting

Furnish the names of the *Certified Erosion and Sediment Control/Stormwater Supervisor, Certified Foremen, Certified Installers* and *Certified Designer* and notify the Engineer of changes in certified personnel over the life of the contract within 2 days of change.

Ethical Responsibility

Any company performing work for the North Carolina Department of Transportation has the ethical responsibility to fully disclose any reprimand or dismissal of an employee resulting from improper testing or falsification of records.

Revocation or Suspension of Certification

Upon recommendation of the Chief Engineer to the certification entity, certification for *Supervisor*, *Certified Foremen*, *Certified Installers* and *Certified Designer* may be revoked or suspended with the issuance of an *Immediate Corrective Action (ICA), Notice of Violation (NOV),* or C*ease and Desist Order* for erosion and sediment control/stormwater related issues.

The Chief Engineer may recommend suspension or permanent revocation of certification due to the following:

(A) Failure to adequately perform the duties as defined within this certification provision.
(B) Issuance of an ICA, NOV, or Cease and Desist Order.
(C) Failure to fully perform environmental commitments as detailed within the permit conditions and specifications.
(D) Demonstration of erroneous documentation or reporting techniques.

(E) Cheating or copying another candidate's work on an examination.
(F) Intentional falsification of records.
(G) Directing a subordinate under direct or indirect supervision to perform any of the above actions.
(H) Dismissal from a company for any of the above reasons.
(I) Suspension or revocation of one's certification by another entity.

Suspension or revocation of a certification will be sent by certified mail to the certificant and the Corporate Head of the company that employs the certificant.

A certificant has the right to appeal any adverse action which results in suspension or permanent revocation of certification by responding, in writing, to the Chief Engineer within 10 calendar days after receiving notice of the proposed adverse action.

Chief Engineer
1536 Mail Service Center
Raleigh, NC 27699-1536

Failure to appeal within 10 calendar days will result in the proposed adverse action becoming effective on the date specified on the certified notice. Failure to appeal within the time specified will result in a waiver of all future appeal rights regarding the adverse action taken. The certificant will not be allowed to perform duties associated with the certification during the appeal process.

The Chief Engineer will hear the appeal and make a decision within 7 days of hearing the appeal. Decision of the Chief Engineer will be final and will be made in writing to the certificant.

If a certification is temporarily suspended, the certificant shall pass any applicable written examination and any proficiency examination, at the conclusion of the specified suspension period, prior to having the certification reinstated.

Measurement and Payment

Certified Erosion and Sediment Control/Stormwater Supervisor, Certified Foremen, Certified Installers and *Certified Designer* will be incidental to the project for which no direct compensation will be made.

PROCEDURE FOR MONITORING BORROW PIT DISCHARGE:

(2-20-07) 105-16, 230, 801 SP1 G181

Water discharge from borrow pit sites shall not cause surface waters to exceed 50 NTUs (nephelometric turbidity unit) in streams not designated as trout waters and 10 NTUs in streams, lakes or reservoirs designated as trout waters. For lakes and reservoirs not designated as trout waters, the turbidity shall not exceed 25 NTUs. If the turbidity exceeds these levels due to natural background conditions, the existing turbidity level shall not be increased.

If during any operating day, the downstream water quality exceeds the standard, the Contractor shall do all of the following:

(A) Either cease discharge or modify the discharge volume or turbidity levels to bring the downstream turbidity levels into compliance, or

(B) Evaluate the upstream conditions to determine if the exceedance of the standard is due to natural background conditions. If the background turbidity measurements exceed the standard, operation of the pit and discharge can continue as long as the stream turbidity levels are not increased due to the discharge.

(C) Measure and record the turbidity test results (time, date and sampler) at all defined sampling locations 30 minutes after startup and at a minimum, one additional sampling of all sampling locations during that 24-hour period in which the borrow pit is discharging.

(D) Notify DWQ within 24 hours of any stream turbidity standard exceedances that are not brought into compliance.

During the Environmental Assessment required by Article 230-4 of the *2012 Standard Specifications*, the Contractor shall define the point at which the discharge enters into the State's surface waters and the appropriate sampling locations. Sampling locations shall include points upstream and downstream from the point at which the discharge enters these waters. Upstream sampling location shall be located so that it is not influenced by backwater conditions and represents natural background conditions. Downstream sampling location shall be located at the point where complete mixing of the discharge and receiving water has occurred.

The discharge shall be closely monitored when water from the dewatering activities is introduced into jurisdictional wetlands. Any time visible sedimentation (deposition of sediment) on the wetland surface is observed, the dewatering activity will be suspended until turbidity levels in the stilling basin can be reduced to a level where sediment deposition does not occur. Staining of wetland surfaces from suspended clay particles, occurring after evaporation or infiltration, does not constitute sedimentation. No activities shall occur in wetlands that adversely affect the functioning of a wetland. Visible sedimentation will be considered an indication of possible adverse impacts on wetland use.

The Engineer will perform independent turbidity tests on a random basis. These results will be maintained in a log within the project records. Records will include, at a minimum, turbidity test results, time, date and name of sampler. Should the Department's test results exceed those of the Contractor's test results, an immediate test shall be performed jointly with the results superseding the previous test results of both the Department and the Contractor.

The Contractor shall use the *NCDOT Turbidity Reduction Options for Borrow Pits Matrix,* available at http://www.ncdot.org/doh/preconstruct/ps/contracts/letting.html to plan, design, construct, and maintain BMPs to address water quality standards. Tier I Methods include stilling basins which are standard compensatory BMPs. Other Tier I methods are noncompensatory and shall be used when needed to meet the stream turbidity standards. Tier II Methods are also

noncompensatory and are options that may be needed for protection of rare or unique resources or where special environmental conditions exist at the site which have led to additional requirements being placed in the DWQ's 401 Certifications and approval letters, Isolated Wetland Permits, Riparian Buffer Authorization or a DOT Reclamation Plan's Environmental Assessment for the specific site. Should the Contractor exhaust all Tier I Methods on a site exclusive of rare or unique resources or special environmental conditions, Tier II Methods may be required by regulators on a case by case basis per supplemental agreement.

The Contractor may use cation exchange capacity (CEC) values from proposed site borings to plan and develop the bid for the project. CEC values exceeding 15 milliequivalents per 100 grams of soil may indicate a high potential for turbidity and should be avoided when dewatering into surface water is proposed.

No additional compensation for monitoring borrow pit discharge will be paid.

NOTES TO CONTRACTOR:

1. The sign post located adjacent to Merritt's Store shall remain the property of the property owner. Remove the sign post and place in an area designated by the property owner. All care possible shall be taken not to damage the sign post throughout removal, transport and transfer of possession to the property owner. No separate payment will be made for this work as it will be considered incidental to the work of "*Grading*".

2. The stone wall and gravel walking path along the west side of South Columbia Street shall not be disturbed. If the stone wall or gravel walking path is disturbed or damaged due to the Contractor's construction activity, they shall be restored to their original condition at no cost to the Department. If gravel is needed to restore the walking path it shall be obtained at the Contractor's expense from Merritt's Gravel Pit at 3200 Damascus Church Road in Orange County.

3. Construction staging is prohibited at Merritt's Store and in the West Chapel Hill Historic District.

EMPLOYMENT:
(11-15-11) (Rev. 1-17-12) 108, 102 SP1 G184

Revise the *2012 Standard Specifications* as follows:

Page 1-20, Subarticle 102-15(O), delete and replace with the following:

(O) Failure to restrict a former Department employee as prohibited by Article 108-5.

Page 1-65, Article 108-5 Character of Workmen, Methods, and Equipment, line 32, delete all of line 32, the first sentence of the second paragraph and the first word of the second sentence of the second paragraph.

STATE HIGHWAY ADMINISTRATOR TITLE CHANGE:
(9-18-12) SP1 G185

Revise the *2012 Standard Specifications* as follows:

Replace all references to "State Highway Administrator" with "Chief Engineer".

PROJECT SPECIAL PROVISIONS

ROADWAY

CLEARING AND GRUBBING - METHOD II:

(9-17-02) (Rev. 1-17-12) 200 SP2 R02A

Perform clearing on this project to the limits established by Method "II" shown on Standard Drawing No. 200.02 of the *2012 Roadway Standard Drawings*.

BURNING RESTRICTIONS:

(7-1-95) 200, 210, 215 SP2 R05

Open burning is not permitted on any portion of the right-of-way limits established for this project. Do not burn the clearing, grubbing or demolition debris designated for disposal and generated from the project at locations within the project limits, off the project limits or at any waste or borrow sites in this county. Dispose of the clearing, grubbing and demolition debris by means other than burning, according to state or local rules and regulations.

CONTAMINATED SOIL

The Contractor's attention is directed to the fact that soil containing petroleum hydrocarbon compounds and volatile organic compounds may be encountered during construction

Information relating to this contaminated area, sample locations, and laboratory results are available at the following web address:

www.ncdot.org/doh/preconstruct/ps/contracts/letting.html

Impact to contamination is possible during any earthwork activities on the project. The Contractor shall only excavate those soils which the Engineer designates necessary to complete a particular task. The Engineer shall determine if soil is contaminated based on petroleum odors and unusual soil staining. Contaminated soil not required to be excavated is to remain in place and undisturbed. Undisturbed soil shall remain in place, whether contaminated or not. The Contractor shall stockpile all excavated contaminated soil within the property boundaries of the property from which it was removed. If the volume of contaminated material exceeds available space on site, the Contractor shall obtain a permit from the NCDENR UST Section for off-site temporary storage. The stockpile shall be constructed in accordance with the "Diagram for Temporary Containment of Petroleum Contaminated Soil" detail located at the above referenced website. The Engineer is to notify the Geotechnical Engineering Unit if petroleum contaminated soil is encountered and the Geotechnical Engineering Unit shall arrange for the sampling and disposal of the contaminated soil.

Measurement and Payment:

The quantity of contaminated soil excavated and stockpiled shall be the actual number of cubic yards of material, which has been acceptably excavated and stockpiled. Include in the unit bid price for *Excavating and Stockpiling Contaminated Soil* all costs associated with this activity including excavation, stockpile construction material, and personal protective equipment.

Payment shall be made under:

Pay Item	Pay Unit
Excavation and Stockpiling Contaminated Soil	Cubic Yards

SHOULDER AND FILL SLOPE MATERIAL:

(5-21-02) 235, 560 SP2 R45 A

Description

Perform the required shoulder and slope construction for this project in accordance with the applicable requirements of Section 560 and Section 235 of the *2012 Standard Specifications*.

Measurement and Payment

Where the material has been obtained from an authorized stockpile or from a borrow source and *Borrow Excavation* is not included in the contract, no direct payment will be made for this work, as the cost of this work will be part of the work being paid at the contract lump sum price for *Grading*. If *Borrow Excavation* is included in this contract and the material has been obtained from an authorized stockpile or from a borrow source, measurement and payment will be as provided in Section 230 of the *2012 Standard Specifications* for *Borrow Excavation*.

AGGREGATE SUBGRADE **(SPECIAL)**

Description

Construct aggregate subgrades with shallow undercut in accordance with this special provision. Install geogrid and nonwoven separation geotextile or alternatively install high strength geotextile and place Class IV subgrade stabilization at locations as determined by the Engineer.

Materials

Refer to Division 10 of the *Standard Specifications*:

Item	Section
Anchor Pins	1056
Select Material, Class IV	1016
Wire Staples	1060-8(D)

Use Class IV, select material for Class IV subgrade stabilization.

Geogrid

The Geogrid shall be biaxial geogrid composed of polypropylene. The biaxial geogrid shall be a regular network of integrally connected elements with aperture geometry sufficient to permit significant mechanical interlock with the surrounding soil. The geogrid shall have high tensile modulus in relation to the soil being reinforced and shall also have a high continuity of tensile strength through all of its elements. The geogrid shall be dimensionally stable and able to retain its geometry under construction stresses. The material shall have high resistance to ultraviolet degradation and to all forms of chemical and biological degradation encountered in the soil being reinforced.

Geogrids used must meet the following properties:

MINIMUM GEOGRID PROPERTY VALUES

Geogrid Properties	**Test Method**	**Machine Direction MD**	**Perpendicular to Machine Direction (Cross-Machine Direction)**
Aperture Size –(in.)	Direct Measure	1.0 to 2.0	1.0 to 2.0
Wide Width Strip Tensile Strength at 5% Strain (lb/ft)	ASTM D 6637-01	700	700
Wide Width Strip Tensile Strength – Ultimate Strength (lb/ft)	ASTM D 6637-01	1200	1200
Ultimate Junction Strength (lbs/ft)	GRI-GG2-05	600	600
Aperture Stability (m-N/deg)	U.S. Army C.O.E.*	0.65	0.65

*The Aperture Stability is based on resistance to in-plane rotational movement measured by applying a 20 kg-cm (2 m-N) moment to the central junction of a 9 inch by 9 inch specimen at its perimeter in accordance with the U.S. Army Corps of Engineers Methodology for measurement of Torsional Rigidity.

mg = milligram
cm = centimeter
m = meter
N = Newton

Unless indicated otherwise, values shown are minimum average roll values (MARV) determined in accordance with ASTM D-4759-02. Multiple layers of geogrid used to meet the requirements set forth in the preceding table will not be accepted.

Acceptance Requirements - The actual minimum average roll values furnished by the manufacturer must be based on representative test results from the manufacturing plant which

produced the geogrid, and must meet or exceed each of the specified minimum values. Label all geogrids clearly as being part of the same production run certified as meeting all applicable requirements.

Furnish a Type 1 Certified Mill Test Report for the geogrid in accordance with Article 1056-3 of the *Standard Specifications*; however, the material shall be subject to inspection, test, or rejection by the Engineer at any time. If requested by the Engineer, provide a sample of the geogrid for testing.

Nonwoven Separation Geotextile

The nonwoven separation geotextile must meet the following properties:

MINIMUM NONWOVEN SEPARATION GEOTEXTILE PROPERTY VALUES

Nonwoven Separation Geotextile Properties	**Test Method**	**Minimum Requirements are for both Machine and Cross-Machine Directions**
Grab Strength (lb)	ASTM D 4632-08	160
Puncture Strength (lb)	ASTM D 6241-04	310
Trapezoidal Tear (lb)	ASTM D 4533-04	60
Max. Apparent Opening Size (US Sieve #)	ASTM D 4751-04	60
Permittivity (sec-1)	ASTM D 4491-99a	0.05
Ultraviolet Degradation (% Retained Strength at 500 hr)	ASTM D 4355-04	50
Polymer Type		Polyester (PET) or Polypropylene (PP)

Furnish a Type 1 Certified Mill Test Report for the nonwoven separation geotextile in accordance with Section 106-3 of *Standard Specifications*; however, the material shall be subject to inspection, test, or rejection by the Engineer at any time. If requested by the Engineer, provide a sample of the geotextile for testing.

High Strength Geotextile

The geotextile shall be made of high-tenacity polyester in the machine direction with a plain or straight-warp weave pattern and polyester or polypropylene in the cross machine direction or approved equal. The geotextile shall be composed of strong rot-proof synthetic fibers formed into a geotextile of the woven type. The geotextile shall be free of any treatment or coating which might significantly alter its physical properties after installation.

The geotextile shall contain stabilizers and/or inhibitors to make the filaments resistant to deterioration resulting from ultraviolet or heat exposure. The geotextile shall be a pervious sheet of synthetic fibers oriented into a stable network so that the fibers retain their relative positions with respect to each other. The edges of the geotextile shall be finished to prevent the outer yarn

from pulling away from the geotextile. The geotextile shall be free of defects or flaws which significantly affect its physical and/or filtering properties. Sew sheets of geotextile together with a seam that furnishes the required minimum strengths, when sewing is required. The seam thread shall be made of synthetic fibers which are resistant to deterioration, as are the geotextile fibers. Lamination of geotextile sheets to produce the physical requirements of a geotextile layer will not be accepted.

The geotextile shall meet the following physical requirements:

All values represent minimum average roll values (MARV) as defined by ASTM D4439 for geotextile properties (any roll in a lot (a single day's production) should meet or exceed the minimum values in this table). Machine direction (MD) and cross-machine direction (CD) are as defined by ASTM D4439.

Provide Type 1 Certified Mill Test Report in accordance with Article 106-3 of the *Standard Specifications* with minimum average roll values (MARV) as defined by ASTM D4439 for geotextile properties. For testing geotextiles, a lot is defined as a single day's production. The Engineer reserves the right to inspect or test the geotextiles at any time. If requested by the Engineer, provide a sample of the geotextile for testing.

Use woven polyester or polypropylene geotextiles with properties meeting the following requirements:

Property	ASTM Test Method	Requirement (MARV)
Wide Width Tensile Strength @ 5% Strain (MD & CD)	D4595	2400 lbs/ft
Wide Width Tensile Strength @ Ultimate (MD & CD)	D4595	4800 lbs/ft
Permittivity	D4491	0.40 sec^{-1}
Apparent Opening Size[1]	D4751	No. 30 sieve (0.6 mm)
Ultraviolet Stability (% strength retained)[2]	D4355	80%
Ultimate Seam Strength (MD & CD)	D4884	3000 lbs/ft

[1]Per ASTM D4751
[2]After 500 hours of exposure

Construction

Use geogrid and nonwoven separation geotextile or alternatively use high strength geotextile as the reinforcement to be located at the bottom of the aggregate subgrade. A geogrid/nonwoven geotextile composite product meeting the individual geogrid and nonwoven geotextile requirements is acceptable in place of separate products.

During all periods of shipment and storage, the geotextile and geogrid shall be wrapped in a heavy duty protective covering to protect the geotextile and geogrid from direct sunlight ultraviolet rays, mud, dust, dirt, and debris. The geotextile and geogrid shall not be exposed to temperatures greater than 60°C (140°F). After the protective wrapping has been removed, the

geotextile and geogrid shall not be left uncovered under any circumstances for longer than one (1) week.

Undercut in accordance with Section 225 of the *Standard Specifications* as needed to install separation geotextile and geogrid or high strength geotextile and a minimum compacted thickness of 12 inches of Class IV subgrade stabilization. Install nonwoven separation geotextile and geogrid or alternatively install high strength geotextile in accordance with Article 270-3 of the *Standard Specifications* directly below the Class IV subgrade stabilization. Place the geogrid directly above the nonwoven separation geotextile. Roll direction (machine direction) for both nonwoven separation geotextile and geogrid or the high strength geotextile shall be parallel with the project alignment. Overlap sides of rolls of the geotextile or geogrid with adjacent panels a minimum of one (1) foot. Overlap ends of rolls with next roll a minimum of four (4) feet. In lieu of overlap, the Contractor may sew the adjacent layers of the geotextiles by an approved method to develop the required seam strength. All sewn seams shall be placed facing upward to allow for inspection. Remove all slack from separation geotextile and geogrid or high strength geotextile before placing Class IV subgrade stabilization. All geotextile and geogrid which is damaged as a result of installation shall be replaced or repaired at the discretion of the Engineer with no additional cost to the Department.

Place Class IV subgrade stabilization in one lift by end dumping or spreading aggregate on the geogrid and nonwoven separation geotextile or high strength geotextile. Do not operate any equipment on the geogrid or high strength geotextile until it is covered with 12 inches of Class IV subgrade stabilization. Compact Class IV subgrade stabilization to a minimum of 92% of AASHTO T180 as modified by the Department. A copy of this modified test procedure is available upon request from the Materials and Tests Unit.

Do not leave the earth material at the bottom of the aggregate subgrade exposed for more than three (3) days before placement of Aggregate Subgrade.

Maintain Class IV subgrade stabilization in an acceptable condition and minimize the use of heavy equipment on Class IV subgrade stabilization in order to avoid damaging aggregate subgrades. Provide and maintain drainage ditches and drains as required to prevent entrapment of water in aggregate subgrades.

DCP Testing

The Engineer may conduct DCP testing at the bottom of the aggregate subgrade on 200 ft spacing when the Contractor has notified the Department that the aggregate subgrade location has been prepared for geogrid or geotextile placement. The Department reserves the right to increase the frequency of DCP testing in poor subgrade locations. If the DCP tests indicate extremely poor subgrade such that the above aggregate subgrade thickness may be insufficient, the Engineer may provide direction to increase the aggregate compacted thickness.

If a compacted thickness of greater than 12 inches is so directed, place the nonwoven separation geotextile at the bottom of the aggregate layer and place sufficient Class IV subgrade stabilization, before geogrid placement, to position the geogrid at a depth of 12 inches below the

surface of the compacted aggregate subgrade. The high strength geotextile shall be placed at the bottom of the undercut regardless of the thickness of the aggregate subgrade. Compaction requirements apply only to the top 12 inches of Class IV subgrade stabilization for aggregate for thicknesses greater than 12 inches.

Measurement and Payment

Shallow Undercut will be measured and paid in cubic yards. Shallow undercut will be measured in accordance with Article 225-7 of the *Standard Specifications*. The contract unit price for *Shallow Undercut* will be full compensation for excavating, hauling and disposing of materials to construct aggregate subgrades. No separate payment will be made for any drainage measures to prevent entrapping water in the shallow undercut area.

Class IV Subgrade Stabilization will be measured and paid in tons. *Class IV Subgrade Stabilization* will be measured by weighing material in trucks in accordance with Article 106-7. The contract unit price for *Class IV Subgrade Stabilization* will be full compensation for furnishing, hauling and handling, placing, compacting, maintaining ABC.

Geogrid will be measured and paid in square yards. *Geogrid* will be measured along the ground surface as the square yards of exposed geogrids before placing backfill material. No measurement will be made for overlapping geogrids. The contract unit price for *Geogrid* will be full compensation for providing, transporting, placing geogrid, wire staples, and anchor pins.

Nonwoven Separation Geotextile will be measured and paid in square yards. *Nonwoven Separation Geotextile* will be measured along the ground surface as the square yards of exposed geotextiles before placing backfill material. No measurement will be made for overlapping geotextiles or sewing seams. The contract unit price for *Nonwoven Separation Geotextile* will be full compensation for providing, transporting, placing geotextiles, wire staples, and anchor pins and sewing geotextiles.

High Strength Geotextile will be measured and paid in square yards. *High Strength Geotextile* will be measured along the ground surface as the square yards of exposed geotextiles before placing backfill material. No measurement will be made for overlapping geotextiles or sewing seams. The contract unit price for *High Strength Geotextile* will be full compensation for providing, transporting, placing geotextiles, wire staples, and anchor pins and sewing geotextiles.

Pay Item	**Pay Unit**
Shallow Undercut	Cubic Yards
Class IV Subgrade Stabilization	Tons
Geogrid	Square Yards
Nonwoven Separation Geotextile	Square Yards
High Strength Geotextile	Square Yards

TEMPORARY 12" PLASTIC CORRUGATED PIPE:

Description

Construct temporary 12" plastic corrugated pipe at location indicated in the plans and as directed by the Engineer.

Materials

Pipe shall be corrugated plastic of sufficient strength to withstand any live or dead loads that will be encountered for as long as it is in use and capable of being collared to the existing pipe. Submit pipe material and design to the Engineer for approval.

Construction Methods

Install temporary 12" plastic corrugated pipe in a manner approved by the Engineer.

Measurement and Payment

Temporary 12" Plastic Corrugated Pipe will be measured and paid for per linear foot of pipe that has been installed and accepted. Such price and payment shall include, but not be limited to connection to the existing pipe, excavation and all pipe, labor, tools and incidentals necessary to complete the work.

Payment will be made under:

Pay Item	Pay Unit
Temporary 12" Plastic Corrugated Pipe	Linear Foot

FLOWABLE FILL:

(9-17-02) (Rev 1-17-12) 300, 340, 450, 1000, 1530, 1540, 1550 SP3 R30

Description

This work consists of all work necessary to place flowable fill in accordance with these provisions, the plans, and as directed.

Materials

Refer to Division 10 of the *2012 Standard Specifications*.

Item	Section
Flowable Fill	1000-6

Construction Methods

Discharge flowable fill material directly from the truck into the space to be filled, or by other approved methods. The mix may be placed full depth or in lifts as site conditions dictate. The Contractor shall provide a method to plug the ends of the existing pipe in order to contain the flowable fill.

Measurement and Payment

At locations where flowable fill is called for on the plans and a pay item for flowable fill is included in the contract, *Flowable Fill* will be measured in cubic yards and paid as the actual number of cubic yards that have been satisfactorily placed and accepted. Such price and payment will be full compensation for all work covered by this provision including, but not limited to, the mix design, furnishing, hauling, placing and containing the flowable fill.

Payment will be made under:

Pay Item	Pay Unit
Flowable Fill	Cubic Yard

ASPHALT PAVEMENTS - SUPERPAVE:
(6-19-12) 605 SP6 R01

Revise the *2012 Standard Specifications* as follows:

Page 6-3, Article 605-7 APPLICATION RATES AND TEMPERATURES, replace this article, including Table 601-1, with the following:

Apply tack coat uniformly across the existing surface at target application rates shown in Table 605-1.

TABLE 605-1
APPLICATION RATES FOR TACK COAT

Existing Surface	Target Rate (gal/sy) Emulsified Asphalt
New Asphalt	0.04 ± 0.01
Oxidized or Milled Asphalt	0.06 ± 0.01
Concrete	0.08 ± 0.01

Apply tack coat at a temperature within the ranges shown in Table 605-2. Tack coat shall not be overheated during storage, transport or at application.

TABLE 605-2
APPLICATION TEMPERATURE FOR TACK COAT

Asphalt Material	Temperature Range
Asphalt Binder, Grade PG 64-22	350 - 400°F
Emulsified Asphalt, Grade RS-1H	130 - 160°F
Emulsified Asphalt, Grade CRS-1	130 - 160°F
Emulsified Asphalt, Grade CRS-1H	130 - 160°F
Emulsified Asphalt, Grade HFMS-1	130 - 160°F
Emulsified Asphalt, Grade CRS-2	130 - 160°F

Page 6-18, Article 610-1 DESCRIPTION, lines 40-41, delete the last sentence of the last paragraph.

Page 6-19, Subarticle 610-3(A) Mix Design-General, line 5, add the following as the first paragraph:

Warm mix asphalt (WMA) is allowed for use at the Contractor's option in accordance with the NCDOT Approved Products List for WMA Technologies available at: **http://www.ncdot.org/doh/operations/materials/pdf/wma.pdf**.

ASPHALT BINDER CONTENT OF ASPHALT PLANT MIXES:
(11-21-00) (Rev. 7-17-12) 609 SP6 R15

The approximate asphalt binder content of the asphalt concrete plant mixtures used on this project will be as follows:

Asphalt Concrete Base Course	Type B 25.0__	4.4%
Asphalt Concrete Intermediate Course	Type I 19.0__	4.8%
Asphalt Concrete Surface Course	Type S 4.75A	6.8%
Asphalt Concrete Surface Course	Type SA-1	6.8%
Asphalt Concrete Surface Course	Type SF 9.5A	6.7%
Asphalt Concrete Surface Course	Type S 9.5__	6.0%
Asphalt Concrete Surface Course	Type S 12.5__	5.6%

The actual asphalt binder content will be established during construction by the Engineer within the limits established in the *2012 Standard Specifications.*

ASPHALT PLANT MIXTURES:
(7-1-95) 609 SP6 R20

Place asphalt concrete base course material in trench sections with asphalt pavement spreaders made for the purpose or with other equipment approved by the Engineer.

PRICE ADJUSTMENT - ASPHALT BINDER FOR PLANT MIX:
(11-21-00) 620 SP6 R25

Price adjustments for asphalt binder for plant mix will be made in accordance with Section 620 of the *2012 Standard Specifications.*

The base price index for asphalt binder for plant mix is **$ 568.67** per ton.

This base price index represents an average of F.O.B. selling prices of asphalt binder at supplier's terminals on **September 1, 2012.**

FINAL SURFACE TESTING NOT REQUIRED:
(5-18-04) (Rev. 5-15-12) 610 SP6 R45

Final surface testing is not required on this project.

TEMPORARY 72" CHAIN LINK FENCE:

Description

Construct temporary 72" chain link fence in accordance with the plans and as directed by the Engineer.

Materials

Refer to Article 866-2 of the *Standard Specifications*.

Construction Methods

Construct the temporary 72" chain link fence in accordance with the applicable requirements of Section 866 of the *Standard Specifications*. Breaks in the fence shall coincide with the openings in the water filled barrier. The Contractor shall present the method for anchoring the posts into the existing concrete pavement to the Engineer for approval. Holes in pavement for fence posts shall be patched by a method approved by the Engineer.

Measurement and Payment

Temporary 72" Chain Link Fence will be measured and paid for per linear foot of fence that has been completed and accepted. Such price and payment shall include, but not be limited to all posts, hardware, materials, labor, tools and incidentals necessary to complete the work and removal of the fence when no longer need as determined by the Engineer. Removed fence becomes the property of the Contractor.

Payment will be made under:

Pay Item	Pay Unit
Temporary 72" Chain Link Fence	Linear Foot

RIP RAP ENERGY DISSIPATOR:

(9-16-08) SPI (Rev.)

Description

This work consists of the construction and maintenance of an armored outlet structure located at culvert outlets or ditch termini.

Materials

Refer to Division 10 of the *Standard Specifications:*

Item	Section
Class I Riprap	Section 1042
Geotextile for Drainage, Type 2	Section 1056

Construction Methods

Riprap Energy dissipators shall be constructed in accordance with the detail shown in the plans or as directed. From the outlet invert of a culvert or bottom of a ditch excavation will drop to a specified depth. Excavation will continue to widen through the dissipator. Rip rap will be placed along the banks and bottom of the dissipator and along the apron.

Excavate ditch in accordance with Section 240 of the *Standard Specifications.*

The quantity of energy dissipator material may be affected by site conditions during construction of the project. The quantity of materials may be increased, decreased, or eliminated at the direction of the Engineer. Such variations in quantity will not be considered as alterations in the details of construction or a change in the character of the work.

Measurement and Payment

Class I Riprap will be measured and paid for in accordance with Section 876 of the *Standard Specifications.*

Geotextile for Drainage will be measured and paid for in accordance with Section 876 of the *Standard Specifications.*

Drainage Ditch Excavation will be measured and paid for in accordance with Section 240 of the *Standard Specifications.*

Such price and payment will be full compensation for all work covered by this section, including, but not limited to furnishing all materials, labor, equipment, and incidentals necessary to construct the riprap energy dissipator.

DETECTABLE WARNINGS TO RETROFIT EXISTING CURB RAMPS:
(10-21-03) (Rev 8-16-11) SP8 R125(Revised)

Description

Construct detectable warnings consisting of raised truncated domes to retrofit existing curb ramps in accordance with the plan details, Section 848 of the *Standard Specifications,* the requirements of the *28 CFR Part 36 ADA Standards for Accessible Design* and these provisions.

Materials

Detectable warning for retrofitting existing curb ramps shall consist of raised truncated domes. The description, size and spacing shall conform to Section 848 of the *Standard Specifications.*

Use material for detectable warning systems as shown herein. Material and coating specifications must be stated in the Manufacturers Type 3 Certification and all Detectable Warning systems must be on the NCDOT Approved Product List for Curb Ramps.

Install detectable warnings created from red precast concrete bricks or blocks approved by the Engineer.

(A) **Detectable Warnings shall** consist of a base with integrated raised truncated domes, and **when constructed of precast concrete** they shall conform to the material requirements of Article 848-2 of the *Standard Specifications.*

(B) Detectable Warnings shall consist of a base with integrated raised truncated domes. The material shall have an integral color throughout the thickness of the material.

Prior to installation, the Contractor shall submit to the Engineer assembling instructions from the manufacturer for each type of system used in accordance with Article 105-2 of the *Standard Specifications*. The system shall be furnished as a kit containing all consumable materials and consumable tools, required for the application. They shall be capable of being affixed to or anchored in the concrete curb ramp, including green concrete (concrete that has set but not appreciably hardened). The system shall be solvent free and contain no volatile organic compounds (VOC). The static coefficient of friction shall be 0.8 or greater when measured on top of the truncated domes and when measured between the domes in accordance with ASTM C 1028 (dry and wet). The system shall be resistant to deterioration due to exposure to sunlight, water, salt or adverse weather conditions and impervious to degradation by motor fuels, lubricants and antifreeze.

(C) Submit to the Engineer a Type 6 Certification, catalog cuts and installation procedures at least 30 days prior to installation for all.

Construction Methods

(A) Prior to placing detectable warnings in existing concrete curb ramps, saw cut to the full depth of the concrete, for other material remove as necessary, and adjust the existing subgrade to the proper grade and in accordance with Article 848-3 of the *Standard Specifications*.

(B) Install all detectable warning to retrofit existing curb ramps in accordance with the manufacturer's recommendations.

Measurement and Payment

Retrofit Existing Curb Ramps with detectable warnings will be paid for as the actual number of retrofitted curb ramps, which have been completed and accepted. Such price and payment will be full compensation for excavating and backfilling; sawing, repairing and replacing portions of the existing curb ramp within the pay limits for retrofit shown on the detail; pavement repairs; furnishing and placing detectable warnings, construction joints and removing and disposing of portions of the existing curb ramp when required and for all materials, labor, equipment, tools and incidentals necessary to complete the work.

Payment will be made under:

Pay Item	Pay Unit
Retrofit Existing Curb Ramp	Each

DETECTABLE WARNINGS FOR PROPOSED CURB RAMPS:

(6-15-10) (Rev 8-16-11) SP8 R126(Revised)

Description

Construct detectable warnings consisting of integrated raised truncated domes on proposed concrete curb ramps in accordance with the *Standard Specifications,* plan details, the requirements of the *28 CFR Part 36 ADA Standards for Accessible Design* and this provision.

Materials

Detectable warning for proposed curb ramps shall consist of integrated raised truncated domes. The description, size and spacing shall conform to Section 848 of the *Standard Specifications.*

Use material for detectable warning systems as shown herein. Material and coating specifications must be stated in the Manufacturers Type 3 Certification and all Detectable Warning systems must be on the NCDOT Approved Product List for Curb Ramps.

Install detectable warnings created from red precast concrete bricks or blocks approved by the Engineer.

(A) Detectable Warnings shall consist of a base with integrated raised truncated domes, and when constructed of precast concrete they shall conform to the material requirements of Article 848-2 of the *Standard Specifications.*

(B) Detectable Warnings shall consist of a base with integrated raised truncated domes. The material shall have an integral color throughout the thickness of the material.

Prior to installation, the Contractor shall submit to the Engineer assembling instructions from the manufacturer for each type of system used in accordance with Article 105-2 of the *Standard Specifications*. The system shall be furnished as a kit containing all consumable materials and consumable tools, required for the application. They shall be capable of being affixed to or anchored in the concrete curb ramp, including green concrete (concrete that has set but not appreciably hardened). The system shall be solvent free and contain no volatile organic compounds (VOC). The static coefficient of friction shall be 0.8 or greater when measured on top of the truncated domes and when measured between the domes in accordance with ASTM C1028 (dry and wet). The system shall be resistant to deterioration due to exposure to sunlight, water, salt or adverse weather conditions and impervious to degradation by motor fuels, lubricants and antifreeze.

(C) Submit to the Engineer a Type 6 Certification, catalog cuts and installation procedures at least 30 days prior to installation for all.

Construction Methods

(A) Prior to placing detectable warnings in proposed concrete curb ramps, adjust the existing subgrade to the proper grade and in accordance with Article 848-3 of the *Standard Specifications*.

(C) Install all detectable warning in proposed concrete curb ramps in accordance with the manufacturer's recommendations.

Measurement and Payment

Detectable Warnings installed for construction of proposed curb ramps will not be paid for separately. Such payment will be included in the price bid for *Concrete Curb Ramps*.

REMOVE AND RESET BRICK SIDEWALK:

Description

The Contractor shall remove and reset the existing brick sidewalk in areas shown in the plans and as directed by the Engineer.

Construction

Remove existing brick, clean as needed and stockpile until resetting. Replace bricks that are too damaged to be reused or otherwise deemed unacceptable to be reset. After excavating the area where the brick sidewalk will be reset, place a leveling layer of fine aggregate and reset the brick sidewalk in the same pattern and dimensions as the existing sidewalk. Fill any trench areas left open after resetting the brick sidewalk with approved topsoil and seed and mulch in accordance with the Contract.

Materials

New bricks that are provided to replace damaged or unacceptable existing bricks shall match as closely as possible the dimensions, color and texture of the existing bricks. New bricks shall meet the approval of the Engineer.

Fine aggregate used for the leveling layer shall be approved by the Engineer.

Measurement and Payment

Remove and Reset Brick Sidewalk will be measured and paid for in units of square yards for the actual number of square yards that have been acceptably reset. Such price and payment includes but is not limited to providing all materials, removing and resetting sidewalk, placing leveling layer, excavating and all labor, tools and incidentals necessary to complete the work.

Payment will be made under:

Pay Item	Pay Unit
Remove and Reset Brick Sidewalk	Square Yards

CONCRETE PASSENGER PADS:

The Contractor shall construct concrete passenger pads in areas shown in the plans, to the dimensions specified in the plans and in accordance with the applicable requirements of Section 848 of the *Standard Specifications*.

This work will be paid for at the unit price bid per square yard for *4" Concrete Sidewalk.*

FOUNDATIONS AND ANCHOR ROD ASSEMBLIES FOR METAL POLES:

(1-17-12) (Rev. 8-21-12) 9, 14, 17 SP9 R05

Description

Foundations for metal poles include foundations for signals, cameras, overhead and dynamic message signs (DMS) and high mount and low level light standards supported by metal poles or upright trusses. Foundations consist of footings with pedestals and drilled piers with or without grade beams or wings. Anchor rod assemblies consist of anchor rods (also called anchor bolts) with nuts and washers on the exposed ends of rods and nuts and a plate or washers on the other ends of rods embedded in the foundation.

Construct concrete foundations with the required resistances and dimensions and install anchor rod assemblies in accordance with the contract and accepted submittals. Construct drilled piers consisting of cast-in-place reinforced concrete cylindrical sections in excavated holes. Provide temporary casings or polymer slurry as needed to stabilize drilled pier excavations. Use a prequalified Drilled Pier Contractor to construct drilled piers for metal poles. Define "excavation" and "hole" as a drilled pier excavation and "pier" as a drilled pier.

This provision does not apply to materials and anchor rod assemblies for standard foundations for low level light standards. See Section 1405 of the *2012 Standard Specifications* and Standard Drawing No. 1405.01 of the *2012 Roadway Standard Drawings* for materials and anchor rod assemblies for standard foundations. For construction of standard foundations for low level light standards, standard foundations are considered footings in this provision.

This provision does not apply to foundations for signal pedestals; see Section 1743 of the *2012 Standard Specifications* and Standard Drawing No. 1743.01 of the *2012 Roadway Standard Drawings*.

Materials

Refer to the *2012 Standard Specifications*.

Item	Section
Conduit	1091-3
Grout, Nonshrink	1003
Polymer Slurry	411-2(B)
Portland Cement Concrete	1000
Reinforcing Steel	1070
Rollers and Chairs	411-2(C)
Temporary Casings	411-2(A)

Provide Type 3 material certifications in accordance with Article 106-3 of the *2012 Standard Specifications* for conduit, rollers, chairs and anchor rod assemblies. Store steel materials on blocking at least 12" above the ground and protect it at all times from damage; and when placing in the work make sure it is free from dirt, dust, loose mill scale, loose rust, paint, oil or other foreign materials. Load, transport, unload and store foundation and anchor rod assembly materials so materials are kept clean and free of damage. Damaged or deformed materials will be rejected.

Use conduit type in accordance with the contract. Use Class A concrete for footings and pedestals, Class Drilled Pier concrete for drilled piers and Class AA concrete for grade beams and wings including portions of drilled piers above bottom of wings elevations. Corrugated temporary casings may be accepted at the discretion of the Engineer. A list of approved polymer slurry products is available from:
www.ncdot.org/doh/preconstruct/highway/geotech/leftmenu/Polymer.html

Provide anchor rod assemblies in accordance with the contract consisting of the following:

(A) Straight anchor rods,

(B) Heavy hex top and leveling nuts and flat washers on exposed ends of rods, and

(C) Nuts and either flat plates or washers on the other ends of anchor rods embedded in foundations.

Do not use lock washers. Use steel anchor rods, nuts and washers that meet ASTM F1554 for Grade 55 rods and Grade A nuts. Use steel plates and washers embedded in concrete with a thickness of at least 1/4". Galvanize anchor rods and exposed nuts and washers in accordance with Article 1076-4 of the *2012 Standard Specifications*. It is not necessary to galvanize nuts, plates and washers embedded in concrete.

Construction Methods

Install the required size and number of conduits in foundations in accordance with the plans and accepted submittals. Construct top of piers, footings, pedestals, grade beams and wings flat, level and within 1" of elevations shown in the plans or approved by the Engineer. Provide an Ordinary Surface finish in accordance with Subarticle 825-6(B) of the *2012 Standard Specifications* for portions of foundations exposed above finished grade. Do not remove anchor bolt templates or pedestal or grade beam forms or erect metal poles or upright trusses onto foundations until concrete attains a compressive strength of at least 3,000 psi.

(A) Drilled Piers

Before starting drilled pier construction, hold a predrill meeting to discuss the installation, monitoring and inspection of the drilled piers. Schedule this meeting after the Drilled Pier Contractor has mobilized to the site. The Resident or Division Traffic Engineer, Contractor and Drilled Pier Contractor Superintendent will attend this predrill meeting.

Do not excavate holes, install piles or allow equipment wheel loads or vibrations within 20 ft of completed piers until 16 hours after Drilled Pier concrete reaches initial set.

Check for correct drilled pier alignment and location before beginning drilling. Check plumbness of holes frequently during drilling.

Construct drilled piers with the minimum required diameters shown in the plans. Install piers with tip elevations no higher than shown in the plans or approved by the Engineer.

Excavate holes with equipment of the sizes required to construct drilled piers. Depending on the subsurface conditions encountered, drilling through rock and boulders may be required. Do not use blasting for drilled pier excavations.

Contain and dispose of drilling spoils and waste concrete as directed and in accordance with Section 802 of the *2012 Standard Specifications*. Drilling spoils consist of all materials and fluids removed from excavations.

If unstable, caving or sloughing materials are anticipated or encountered, stabilize holes with temporary casings and/or polymer slurry. Do not use telescoping temporary casings. If it becomes necessary to replace a temporary casing during drilling, backfill the excavation, insert a larger casing around the casing to be replaced or stabilize the excavation with polymer slurry before removing the temporary casing.

If temporary casings become stuck or the Contractor proposes leaving casings in place, temporary casings should be installed against undisturbed material. Unless otherwise approved, do not leave temporary casings in place for mast arm poles and cantilever signs. The Engineer will determine if casings may remain in place. If the Contractor proposes leaving temporary casings in place, do not begin drilling until a casing installation method is approved.

Use polymer slurry and additives to stabilize holes in accordance with the slurry manufacturer's recommendations. Provide mixing water and equipment suitable for polymer slurry. Maintain polymer slurry at all times so slurry meets Table 411-3 of the *2012 Standard Specifications* except for sand content.

Define a "sample set" as slurry samples collected from mid-height and within 2 ft of the bottom of holes. Take sample sets from excavations to test polymer slurry immediately after filling holes with slurry, at least every 4 hours thereafter and immediately before placing concrete. Do not place Drilled Pier concrete until both slurry samples from an excavation meet the required polymer slurry properties. If any slurry test results do not meet the requirements, the Engineer may suspend drilling until both samples from a sample set meet the required slurry properties.

Remove soft and loose material from bottom of holes using augers to the satisfaction of the Engineer. Assemble rebar cages and place cages and Drilled Pier concrete in accordance with Subarticle 411-4(E) of the *2012 Standard Specifications* except for the following:

(1) Inspections for tip resistance and bottom cleanliness are not required,
(2) Temporary casings may remain in place if approved, and
(3) Concrete placement may be paused near the top of pier elevations for anchor rod assembly installation and conduit placement or
(4) If applicable, concrete placement may be stopped at bottom of grade beam or wings elevations for grade beam or wing construction.

If wet placement of concrete is anticipated or encountered, do not place Drilled Pier concrete until a concrete placement procedure is approved. If applicable, temporary casings and fluids may be removed when concrete placement is paused or stopped in accordance with the exceptions above provided holes are stable. Remove contaminated concrete from exposed Drilled Pier concrete after removing casings and fluids. If holes are unstable, do not remove temporary casings until a procedure for placing anchor rod assemblies and conduit or constructing grade beams or wings is approved.

Use collars to extend drilled piers above finished grade. Remove collars after Drilled Pier concrete sets and round top edges of piers.

If drilled piers are questionable, pile integrity testing (PIT) and further investigation may be required in accordance with Article 411-5 of the *2012 Standard Specifications*. A drilled pier will be considered defective in accordance with Subarticle 411-5(D) of the *2012 Standard Specifications* and drilled pier acceptance is based in part on the criteria in Article 411-6 of the *2012 Standard Specifications* except for the top of pier tolerances in Subarticle 411-6(C) of the *2012 Standard Specifications*.

If a drilled pier is under further investigation, do not grout core holes, backfill around the pier or perform any work on the drilled pier until the Engineer accepts the pier. If the drilled pier is accepted, dewater and grout core holes and backfill around the pier with approved material to finished grade. If the Engineer determines a pier is unacceptable, remediation is required in accordance with Article 411-6 of the *2012 Standard Specifications*. No extension of completion date or time will be allowed for remediation of unacceptable drilled piers or post repair testing.

Permanently embed a plate in or mark top of piers with the pier diameter and depth, size and number of vertical reinforcing bars and the minimum compressive strength of the concrete mix at 28 days.

(B) Footings, Pedestals, Grade Beams and Wings

Excavate as necessary for footings, grade beams and wings in accordance with the plans, accepted submittals and Section 410 of the *2012 Standard Specifications*. If unstable, caving or sloughing materials are anticipated or encountered, shore foundation excavations as needed with an approved method. Notify the Engineer when foundation excavation is complete. Do not place concrete or reinforcing steel until excavation dimensions and foundation material are approved.

Construct cast-in-place reinforced concrete footings, pedestals, grade beams and wings with the dimensions shown in the plans and in accordance with Section 825 of the *2012 Standard Specifications*. Use forms to construct portions of pedestals and grade beams protruding above finished grade. Provide a chamfer with a 3/4" horizontal width for pedestal and grade beam edges exposed above finished grade. Backfill and fill in accordance with Article 410-8 of the *2012 Standard Specifications*. Proper compaction around footings and wings is critical for foundations to resist uplift and torsion forces. Place concrete against undisturbed soil and do not use forms for standard foundations for low level light standards.

(C) Anchor Rod Assemblies

Size anchor rods for design and the required projection above top of foundations. Determine required anchor rod projections from nut, washer and base plate thicknesses, the protrusion of 3 to 5 anchor rod threads above top nuts after tightening and the distance of one nut thickness between top of foundations and bottom of leveling nuts.

Protect anchor rod threads from damage during storage and installation of anchor rod assemblies. Before placing anchor rods in foundations, turn nuts onto and off rods past leveling nut locations. Turn nuts with the effort of one workman using an ordinary wrench without a cheater bar. Report any thread damage to the Engineer that requires extra effort to turn nuts.

Arrange anchor rods symmetrically about center of base plate locations as shown in the plans. Set anchor rod elevations based on required projections above top of foundations. Securely brace and hold rods in the correct position, orientation and alignment with a steel template. Do not weld to reinforcing steel, temporary casings or anchor rods.

Install top and leveling (bottom) nuts, washers and the base plate for each anchor rod assembly in accordance with the following procedure:

(1) Turn leveling nuts onto anchor rods to a distance of one nut thickness between the top of foundation and bottom of leveling nuts. Place washers over anchor rods on top of leveling nuts.

(2) Determine if nuts are level using a flat rigid template on top of washers. If necessary, lower leveling nuts to level the template in all directions or if applicable, lower nuts to tilt the template so the metal pole or upright truss will lean as shown in the plans. If leveling nuts and washers are not in full contact with the template, replace washers with galvanized beveled washers.

(3) Verify the distance between the foundation and leveling nuts is no more than one nut thickness.

(4) Place base plate with metal pole or upright truss over anchor rods on top of washers. High mount luminaires may be attached before erecting metal poles but do not attach cables, mast arms or trusses to metal poles or upright trusses at this time.

(5) Place washers over anchor rods on top of base plate. Lubricate top nut bearing surfaces and exposed anchor rod threads above washers with beeswax, paraffin or other approved lubricant.

(6) Turn top nuts onto anchor rods. If nuts are not in full contact with washers or washers are not in full contact with the base plate, replace washers with galvanized beveled washers.

(7) Tighten top nuts to snug-tight with the full effort of one workman using a 12" wrench. Do not tighten any nut all at once. Turn top nuts in increments. Follow a star pattern cycling through each nut at least twice.

(8) Repeat (7) for leveling nuts.

(9) Replace washers above and below the base plate with galvanized beveled washers if the slope of any base plate face exceeds 1:20 (5%), any washer is not in firm contact with the base plate or any nut is not in firm contact with a washer. If any washers are replaced, repeat (7) and (8).

(10) With top and leveling nuts snug-tight, mark each top nut on a corner at the intersection of 2 flats and a corresponding reference mark on the base plate. Mark top nuts and base plate with ink or paint that is not water-soluble. Use the turn-of-nut method for pretensioning. Do not pretension any nut all at once. Turn top nuts in increments for a total turn that meets the following nut rotation requirements:

NUT ROTATION REQUIREMENTS (Turn-of-Nut Pretensioning Method)	
Anchor Rod Diameter, inch	**Requirement**
≤ 1 1/2	1/3 turn (2 flats)
> 1 1/2	1/6 turn (1 flat)

Follow a star pattern cycling through each top nut at least twice.

(11) Ensure nuts, washers and base plate are in firm contact with each other for each anchor rod. Cables, mast arms and trusses may now be attached to metal poles and upright trusses.

(12) Between 4 and 14 days after pretensioning top nuts, use a torque wrench calibrated within the last 12 months to check nuts in the presence of the Engineer. Completely erect mast arm poles and cantilever signs and attach any hardware before checking top nuts for these structures. Check that top nuts meet the following torque requirements:

TORQUE REQUIREMENTS	
Anchor Rod Diameter, inch	**Requirement, ft-lb**
7/8	180
1	270
1 1/8	380
1 1/4	420
≥ 1 1/2	600

If necessary, retighten top nuts in the presence of the Engineer with a calibrated torque wrench to within ± 10 ft-lb of the required torque. Do not overtighten top nuts.

(13) Do not grout under base plate.

Measurement and Payment

Foundations and anchor rod assemblies for metal poles and upright trusses will be measured and paid for elsewhere in the contract.

No payment will be made for temporary casings that remain in drilled pier excavations. No payment will be made for PIT. No payment will be made for further investigation of defective piers. Further investigation of piers that are not defective will be paid as extra work in accordance with Article 104-7 of the *2012 Standard Specifications*. No payment will be made for remediation of unacceptable drilled piers or post repair testing.

MATERIALS:

(2-21-12) (Rev. 9-18-12) 1005, 1081, 1092 SP10 R01

Revise the *2012 Standard Specifications* as follows:

Page 10-5, Table 1000-1, REQUIREMENTS FOR CONCRETE, replace with the following:

TABLE 1000-1
REQUIREMENTS FOR CONCRETE

Class of Concrete	Min. Comp. Strength at 28 days	Maximum Water-Cement Ratio				Consistency Max. Slump		Cement Content			
		Air-Entrained Concrete		Non Air-Entrained Concrete		Vibrated	Non-Vibrated	Vibrated		Non- Vibrated	
		Rounded Aggre-gate	Angular Aggre-gate	Rounded Aggre-gate	Angular Aggre-gate			Min.	Max.	Min.	Max.
Units	*psi*					*inch*	*inch*	*lb/cy*	*lb/cy*	*lb/cy*	*lb/cy*
AA	4,500	0.381	0.426	-	-	3.5	-	639	715	-	-
AA Slip Form	4,500	0.381	0.426	-	-	1.5	-	639	715	-	-
Drilled Pier	4,500	-	-	0.450	0.450	-	5-7 dry 7-9 wet	-	-	640	800
A	3,000	0.488	0.532	0.550	0.594	3.5	4	564	-	602	-
B	2,500	0.488	0.567	0.559	0.630	2.5	4	508	-	545	-
B Slip Formed	2,500	0.488	0.567	-	-	1.5	-	508	-	-	-
Sand Light-weight	4,500	-	0.420	-	-	4	-	715	-	-	-
Latex Modified	3,000 7 day	0.400	0.400	-	-	6	-	658	-	-	-
Flowable Fill excavatable	150 max. at 56 days	as needed	as needed	as needed	as needed	-	Flow-able	-	-	40	100
Flowable Fill non-excavatable	125	as needed	as needed	as needed	as needed	-	Flow-able	-	-	100	as needed
Pavement	4,500 design, field 650 flexural, design only	0.559	0.559	-	-	1.5 slip form 3.0 hand place	-	526	-	-	-
Precast	See Table 1077-1	as needed	as needed	-	-	6	as needed	as needed	as needed	as needed	as needed
Prestress	per contract	See Table 1078-1	See Table 1078-1	-	-	8	-	564	as needed	-	-

Page 10-23, Table 1005-1, AGGREGATE GRADATION-COARSE AGGREGATE, replace with the following:

TABLE 1005-1
AGGREGATE GRADATION - COARSE AGGREGATE

Std. Size #	Percentage of Total by Weight Passing										Remarks
	2"	1 1/2"	1"	3/4"	1/2"	3/8"	#4	#8	#10	#16	#40	#200	
4	100	90-100	20-55	0-15	-	0-5	-	-	-	-	-	A	Asphalt Plant Mix
467M	100	95-100	-	35-70	-	0-30	0-5	-	-	-	-	A	Asphalt Plant Mix
5	-	100	90-100	20-55	0-10	0-5	-	-	-	-	-	A	AST, Sediment Control Stone
57	-	100	95-100	-	25-60	-	0-10	0-5	-	-	-	A	AST, Str. Concrete, Shoulder Drain, Sediment Control Stone
57M	-	100	95-100	-	25-45	-	0-10	0-5	-	-	-	A	AST, Concrete Pavement
6M	-	-	100	90-100	20-55	0-20	0-8	-	-	-	-	A	AST
67	-	-	100	90-100	-	20-55	0-10	0-5	-	-	-	A	AST, Str. Concrete, Asphalt Plant Mix
78M	-	-	-	100	98-100	75-100	20-45	0-15	-	-	-	A	Asphalt Plant Mix, AST, Str. Conc, Weep Hole Drains
14M	-	-	-	-	-	100	35-70	5-20	-	0-8	-	A	Asphalt Plant Mix, AST, Weep Hole Drains, Str. Concrete
9	-	-	-	-	-	100	85-100	10-40	-	0-10	-	A	AST
ABC	-	100	75-97	-	55-80	-	35-55	-	25-45	-	14-30	4-12[B]	Aggregate Base Course, Aggregate Stabilization
ABC (M)	-	100	75-100	-	45-79	-	20-40	-	0-25	-	-	0-12[B]	Maintenance Stabilization
Light-weight[C]	-	-	-	-	100	80-100	5-40	0-20	-	0-10	-	0-2.5	AST

A. See Subarticle 1005-4(A).
B. See Subarticle 1005-4(B).
C. For Lightweight Aggregate used in Structural Concrete, see Subarticle 1014-2(E)(6).

Page 10-126, Table 1078-1, REQUIREMENTS FOR CONCRETE, replace with the following:

TABLE 1078-1
REQUIREMENTS FOR CONCRETE

Property	28 Day Design Compressive Strength 6,000 psi or less	28 Day Design Compressive Strength greater than 6,000 psi
Maximum Water/Cementitious Material Ratio	0.45	0.40
Maximum Slump without HRWR	3.5"	3.5"
Maximum Slump with HRWR	8"	8"
Air Content (upon discharge into forms)	5 + 2%	5 + 2%

Page 10-162, Subarticle 1081-1(A) Classifications, lines 4-7, delete the second and third sentences of the description for Type 3A.

Page 10-162, Subarticle 1081-1(B) Requirements, lines 26-30, replace the second paragraph with the following:

For epoxy resin systems used for embedding dowel bars, threaded rods, rebar, anchor bolts and other fixtures in hardened concrete, the manufacturer shall submit test results showing that the bonding system will obtain 125% of the specified required yield strength of the fixture. Furnish certification that, for the particular bolt grade, diameter and embedment depth required, the anchor system will not fail by adhesive failure and that there is no movement of the anchor bolt. For certification and anchorage, use 3,000 psi as the minimum Portland cement concrete compressive strength used in this test. Use adhesives that meet Section 1081.

List the properties of the adhesive on the container and include density, minimum and maximum temperature application, setting time, shelf life, pot life, shear strength and compressive strength.

Page 10-169, Subarticle 1081-3(G) Anchor Bolt Adhesives, delete this subarticle.

Page 10-204, Subarticle 1092-2(A) Performance and Test Requirements, replace **Table 1092-3 Minimum Coefficient of Retroreflection for NC Grade A** with the following:

TABLE 1092-3
MINIMUM COEFFICIENT OF RETROREFLECTION FOR NC GRADE A
(Candelas Per Lux Per Square Meter)

Observation Angle, degrees	Entrance Angle, degrees	White	Yellow	Green	Red	Blue	Fluorescent Yellow Green	Fluorescent Yellow
0.2	-4.0	525	395	52	95	30	420	315
0.2	30.0	215	162	22	43	10	170	130
0.5	-4.0	310	230	31	56	18	245	185
0.5	30.0	135	100	14	27	6	110	81
1.0	-4.0	**120**	60	8	16	3.6	64	48
1.0	30.0	45	34	4.5	9	2	36	27

HIGH STRENGTH CONCRETE FOR DRIVEWAYS:

(11-21-00) (Rev. 1-17-12) 848 SP10 R02

Use high early strength concrete for all driveways shown in the plans and as directed by the Engineer. Provide high early strength concrete that meets the requirements of Article 1000-5 of the *2012 Standard Specifications*.

Measurement and payment will be in accordance with Section 848 of the *2012 Standard Specifications*.

#57 STONE:

7-18-06 SPI0 -1

Description

The Contractor shall place #57 stone in the in accordance with the details in the plans and the following provision.

Materials

Item	Section
# 57 Stone	1005

Construction Methods

The stone shall be placed and compacted as directed by the Engineer.

Measurement and Payment

#57 stone will be measured and paid for in tons that are completed and accepted. The stone will be measured by being weighed in trucks on certified platform scales or other certified weighing devices. The price and payment will be full compensation for furnishing, hauling, placing, and all incidentals necessary to complete the work.

Payment will be made under:

Pay Item	Pay Unit
#57 Stone	Ton

SELECT MATERIAL, CLASS III, TYPE 3:
(1-17-12) 1016, 1044 SP10 R05

Revise the *2012 Standard Specifications* as follows:

Page 10-39, Article 1016-3, CLASS III, add the following after line 14:

Type 3 Select Material

Type 3 select material is a natural or manufactured fine aggregate material meeting the following gradation requirements and as described in Sections 1005 and 1006:

Percentage of Total by Weight Passing							
3/8"	#4	#8	#16	#30	#50	#100	#200
100	95-100	65-100	35-95	15-75	5-35	0-25	0-8

Page 10-39, Article 1016-3, CLASS III, line 15, replace "either type" with "Type 1, Type 2 or Type 3".

Page 10-62, Article 1044-1, line 36, delete the sentence and replace with the following:

Subdrain fine aggregate shall meet Class III select material, Type 1 or Type 3.

Page 10-63, Article 1044-2, line 2, delete the sentence and replace with the following:

Subdrain coarse aggregate shall meet Class V select material.

TRUCK MOUNTED CHANGEABLE MESSAGE SIGNS:
(8-21-12) 1101.02 SP11 R10

Revise the *2012 Roadway Standard Drawings* as follows:

Drawing No. 1101.02, Sheet 12, TEMPORARY LANE CLOSURES, replace General Note #11 with the following:

11- TRUCK MOUNTED CHANGEABLE MESSAGE SIGNS (TMCMS) USED ON SHADOW VEHICLES FOR "IN LANE" ACTIVITIES SHALL BE A MINIMUM OF 43" X 73". THE DISPLAY PANEL SHALL HAVE FULL MATRIX CAPABILITY WITH THE CAPABILITY TO PROVIDE 2 MESSAGE LINES WITH 7 CHARACTERS PER LINE WITH A MINIMUM CHARACTER HEIGHT OF 18". FOR ADDITIONAL MESSAGING, CONTACT THE WORK ZONE TRAFFIC CONTROL SECTION.

12- TMCMS USED FOR ADVANCED WARNING ON VEHICLES LOCATED ON THE SHOULDER MAY BE SMALLER THAN 43" X 73". THE DISPLAY PANEL SHALL HAVE THE CAPABILITY TO PROVIDE 2 MESSAGE LINES WITH 7 CHARACTERS PER LINE

WITH A MINIMUM CHARACTER HEIGHT OF 18". FOR ADDITIONAL MESSAGING, CONTACT THE WORK ZONE TRAFFIC CONTROL SECTION.

Drawing No. 1101.02, Sheet 13, TEMPORARY LANE CLOSURES, replace General Note #12 with the following:

12- TRUCK MOUNTED CHANGEABLE MESSAGE SIGNS (TMCMS) USED ON SHADOW VEHICLES FOR "IN LANE" ACTIVITIES SHALL BE A MINIMUM OF 43" X 73". THE DISPLAY PANEL SHALL HAVE FULL MATRIX CAPABILITY WITH THE CAPABILITY TO PROVIDE 2 MESSAGE LINES WITH 7 CHARACTERS PER LINE WITH A MINIMUM CHARACTER HEIGHT OF 18". FOR ADDITIONAL MESSAGING, CONTACT THE WORK ZONE TRAFFIC CONTROL SECTION.

13- TMCMS USED FOR ADVANCED WARNING ON VEHICLES LOCATED ON THE SHOULDER MAY BE SMALLER THAN 43" X 73". THE DISPLAY PANEL SHALL HAVE THE CAPABILITY TO PROVIDE 2 MESSAGE LINES WITH 7 CHARACTERS PER LINE WITH A MINIMUM CHARACTER HEIGHT OF 18". FOR ADDITIONAL MESSAGING, CONTACT THE WORK ZONE TRAFFIC CONTROL SECTION.

PROJECT SPECIAL PROVISIONS
Utility Construction

All proposed utility construction shall meet the applicable requirements of the NC Department of Transportation's Standard Specifications for Roads and Structures dated January 2012 and OWASA Standards and Specifications dated August, 2003 or latest revised version.

Revise the *2012 Standard Specifications* as follows:

Utility Owners' Contact Information:

Page 15-1, Subarticle 1500-2 Cooperation with the Utility Owner, paragraph 2, add the following sentences:

All water and sewer lines on this project belong to Orange Water and Sewer Authority (OWASA).

The Contractor shall provide access for the owner's representatives to all phases of construction and keep all manholes, valves and meters accessible during construction. A preconstruction meeting shall be held with OWASA, the Utility Contractor and D.O.T prior to any work beginning. The Contractor shall notify the owner two weeks before commencement of any work and three weeks before service interruption.

The contact person for Orange Water and Sewer Authority (OWASA) is Mr. Darren Berger, he can be contacted at 919-537-4240.

The contractor shall provide a set of as-built plans to OWASA after all the work shown on the Utility Construction Plans is completed.

All proposed water lines larger than 2" shall be ductile iron pipe. All proposed service lines to water meters shall be copper pipe, type k. Two inch and smaller type k copper tubing shall be hard-drawn copper with silver soldered joints only. The hard-drawn copper joints shall be brazed using Silvalloy, Excel (15% silver), Sil-fos (15% silver), or approved equal solder comprised of 15% silver. Brazing temperatures shall be between 1300 and 1500 degrees Fahrenheit.

Measurement and Payment:

No direct payment will be made for utility construction work required by the preceding provisions, which are general requirements applying to utility construction, and all of the requirements stated will be considered incidental work, paid for at the contract unit prices of the various utility items included in the contract.

PROJECT SPECIAL PROVISIONS
Utilities by Others

General:

The following utility companies have facilities that will be in conflict with the construction of this project:

A. Duke Energy (Power)
B. AT&T (Telephone)
C. TWC (Cable TV)
D. PSNC (GAS)

The conflicting facilities of these concerns will be adjusted prior to the date of availability, unless otherwise noted and are therefore listed in these special provisions for the benefit of the Contractor. All utility work listed herein will be done by the utility owners. All utilities are shown on the plans from the best available information.

The Contractor's attention is directed to Article 105.8 of the Standard Specifications.

Utilities Requiring Adjustment:

A. Duke Energy (Power)

1. Duke Energy needs two (2) weeks notice and seven (7) days to relocate the following poles where significant fill is being placed before the power poles can be relocated.

P-24 at STA. 28+15+/- -L- RT,
P-27 at STA. 29+50+/- -L- RT,
P-28 at STA. 30+82+/- -L- RT,

See "Utilities By Others Plans" for details.

Contact person: Don T. Daniels @ (919) 687-3136

B. AT&T (Telephone)

1. All AT&T's work within the limits of the project will be completed by December 21, 2012, except where Duke Energy's poles are being relocated between Station 22+00 and 30+82. Once Duke Energy places the power poles, AT&T will install the aerial telephone lines within seven (7) days allowed for Duke Energy.

See "Utilities By Others Plans" for details.

Contact person: Jim Brooks @ (336) 788-0150

C. TWC (Cable TV)

1. All TWC work within the limits of this project will be completed by December 21, 2012, except where Duke Energy's poles are being relocated between Station 22+00 and 30+82. Once Duke Energy places the power poles, TWC will install the aerial CATV lines within seven (7) days allowed for Duke Energy.

   See "Utilities By Others Plans" for details.

   Contact person: Bob Lillis @ (336) 573-7018

D. PSNC (GAS)

1. PSNC will adjust their Gas lines as needed within the limits of this project. PSNC needs one (1) week notification and two (2) days to complete their work per incident of conflict.

   See "Utilities By Others Plans" for details.

   Contact person: Frances Grimsley @ 919-367-2714 office
   919-819-9932 mobile

U-0624 **Project Special Provisions** **Orange County**
Erosion Control

STABILIZATION REQUIREMENTS:

Stabilization for this project shall comply with the time frame guidelines as specified by the NCG-010000 general construction permit effective August 3, 2011 issued by the North Carolina Department of Environment and Natural Resources Division of Water Quality. Temporary or permanent ground cover stabilization shall occur within 7 calendar days from the last land-disturbing activity, with the following exceptions in which temporary or permanent ground cover shall be provided in 14 calendar days from the last land-disturbing activity:

- Slopes between 2:1 and 3:1, with a slope length of 10 ft. or less
- Slopes 3:1 or flatter, with a slope of length of 50 ft. or less
- Slopes 4:1 or flatter

The stabilization timeframe for High Quality Water (HQW) Zones shall be 7 calendar days with no exceptions for slope grades or lengths. High Quality Water Zones (HQW) Zones are defined by North Carolina Administrative Code 15A NCAC 04A.0105 (25). Temporary and permanent ground cover stabilization shall be achieved in accordance with the provisions in this contract and as directed.

SEEDING AND MULCHING: (East)

The kinds of seed and fertilizer, and the rates of application of seed, fertilizer, and limestone, shall be as stated below. During periods of overlapping dates, the kind of seed to be used shall be determined. All rates are in pounds per acre.

All Roadway Areas

March 1 - August 31		**September 1 - February 28**	
50#	Tall Fescue	50#	Tall Fescue
10#	Centipede	10#	Centipede
25#	Bermudagrass (hulled)	35#	Bermudagrass (unhulled)
500#	Fertilizer	500#	Fertilizer
4000#	Limestone	4000#	Limestone

Waste and Borrow Locations

March 1 – August 31		**September 1 - February 28**	
75#	Tall Fescue	75#	Tall Fescue
25#	Bermudagrass (hulled)	35#	Bermudagrass (unhulled)
500#	Fertilizer	500#	Fertilizer
4000#	Limestone	4000#	Limestone

Note: 50# of Bahiagrass may be substituted for either Centipede or Bermudagrass only upon Engineer's request.

Approved Tall Fescue Cultivars

2nd Millennium	Duster	Magellan	Rendition
Avenger	Endeavor	Masterpiece	Scorpion
Barlexas	Escalade	Matador	Shelby
Barlexas II	Falcon II, III, IV & V	Matador GT	Signia
Barrera	Fidelity	Millennium	Silverstar
Barrington	Finesse II	Montauk	Southern Choice II
Biltmore	Firebird	Mustang 3	Stetson
Bingo	Focus	Olympic Gold	Tarheel
Bravo	Grande II	Padre	Titan Ltd
Cayenne	Greenkeeper	Paraiso	Titanium
Chapel Hill	Greystone	Picasso	Tomahawk
Chesapeake	Inferno	Piedmont	Tacer
Constitution	Justice	Pure Gold	Trooper
Chipper	Jaguar 3	Prospect	Turbo
Coronado	Kalahari	Quest	Ultimate
Coyote	Kentucky 31	Rebel Exeda	Watchdog
Davinci	Kitty Hawk	Rebel Sentry	Wolfpack
Dynasty	Kitty Hawk 2000	Regiment II	
Dominion	Lexington	Rembrandt	

On cut and fill slopes 2:1 or steeper Centipede shall be applied at the rate of 5 pounds per acre and add 20# of Sericea Lespedeza from January 1 - December 31.

Fertilizer shall be 10-20-20 analysis. A different analysis of fertilizer may be used provided the 1-2-2 ratio is maintained and the rate of application adjusted to provide the same amount of plant food as a 10-20-20 analysis and as directed.

Native Grass Seeding And Mulching **(West)**

Native Grass Seeding and Mulching shall be performed on the disturbed areas of wetlands and riparian areas, and adjacent to Stream Relocation and/or trout stream construction within a 50 foot zone on both sides of the stream or depression, measured from top of stream bank or center of depression. The stream bank of the stream relocation shall be seeded by a method that does not alter the typical cross section of the stream bank. Native Grass Seeding and Mulching shall also be performed in the permanent soil reinforcement mat section of preformed scour holes, and in other areas as directed.

The kinds of seed and fertilizer, and the rates of application of seed, fertilizer, and limestone, shall be as stated below. During periods of overlapping dates, the kind of seed to be used shall be determined. All rates are in pounds per acre.

August 1 - June 1		May 1 – September 1	
18#	Creeping Red Fescue	18#	Creeping Red Fescue
8#	Big Bluestem	8#	Big Bluestem
6#	Indiangrass	6#	Indiangrass
4#	Switchgrass	4#	Switchgrass
35#	Rye Grain	25#	German or Browntop Millet
500#	Fertilizer	500#	Fertilizer
4000#	Limestone	4000#	Limestone

Approved Creeping Red Fescue Cultivars:

Aberdeen	Boreal	Epic	Cindy Lou

Fertilizer shall be 10-20-20 analysis. A different analysis of fertilizer may be used provided the 1-2-2 ratio is maintained and the rate of application adjusted to provide the same amount of plant food as a 10-20-20 analysis and as directed.

Native Grass Seeding and Mulching shall be performed in accordance with Section 1660 of the *Standard Specifications* and vegetative cover sufficient to restrain erosion shall be installed immediately following grade establishment.

Measurement and Payment

Native Grass *Seeding and Mulching* will be measured and paid for in accordance with Article 1660-8 of the *Standard Specifications*.

TEMPORARY SEEDING:

Fertilizer shall be the same analysis as specified for *Seeding and Mulching* and applied at the rate of 400 pounds and seeded at the rate of 50 pounds per acre. Sweet Sudan Grass, German Millet or Browntop Millet shall be used in summer months and Rye Grain during the remainder of the year. The Engineer will determine the exact dates for using each kind of seed.

FERTILIZER TOPDRESSING:

Fertilizer used for topdressing on all roadway areas except slopes 2:1 and steeper shall be 10-20-20 grade and shall be applied at the rate of 500 pounds per acre. A different analysis of fertilizer may be used provided the 1-2-2 ratio is maintained and the rate of application adjusted to provide the same amount of plant food as 10-20-20 analysis and as directed.

Fertilizer used for topdressing on slopes 2:1 and steeper and waste and borrow areas shall be 16-8-8 grade and shall be applied at the rate of 500 pounds per acre. A different analysis of fertilizer may be used provided the 2-1-1 ratio is maintained and the rate of application adjusted to provide the same amount of plant food as 16-8-8 analysis and as directed.

SUPPLEMENTAL SEEDING:

The kinds of seed and proportions shall be the same as specified for *Seeding and Mulching*, with the exception that no centipede seed will be used in the seed mix for supplemental seeding. The rate of application for supplemental seeding may vary from 25# to 75# per acre. The actual rate per acre will be determined prior to the time of topdressing and the Contractor will be notified in writing of the rate per acre, total quantity needed, and areas on which to apply the supplemental seed. Minimum tillage equipment, consisting of a sod seeder shall be used for incorporating seed into the soil as to prevent disturbance of existing vegetation. A clodbuster (ball and chain) may be used where degree of slope prevents the use of a sod seeder.

MOWING:

The minimum mowing height on this project shall be 4 inches.

LAWN TYPE APPEARANCE:

All areas adjacent to lawns must be hand finished as directed to give a lawn type appearance. Remove all trash, debris, and stones ¾" and larger in diameter or other obstructions that could interfere with providing a smooth lawn type appearance. These areas shall be reseeded to match their original vegetative conditions, unless directed otherwise by the Field Operations Engineer.

RESPONSE FOR EROSION CONTROL:

Description

Furnish the labor, materials, tools and equipment necessary to move personnel, equipment, and supplies to the project necessary for the pursuit of any or all of the following work as shown herein, by an approved subcontractor.

Section	Erosion Control Item	Unit
1605	Temporary Silt Fence	LF
1606	Special Sediment Control Fence	LF/TON
1615	Temporary Mulching	ACR
1620	Seed - Temporary Seeding	LB
1620	Fertilizer - Temporary Seeding	TN
1631	Matting for Erosion Control	SY
SP	Coir Fiber Mat	SY
1640	Coir Fiber Baffles	LF
SP	Permanent Soil Reinforcement Mat	SY
1660	Seeding and Mulching	ACR

1661	Seed - Repair Seeding	LB
1661	Fertilizer - Repair Seeding	TON
1662	Seed - Supplemental Seeding	LB
1665	Fertilizer Topdressing	TON
SP	Safety/Highly Visible Fencing	LF
SP	Response for Erosion Control	EA

Construction Methods

Provide an approved subcontractor who performs an erosion control action as described in the NPDES Inspection Form SPPP30. Each erosion control action may include one or more of the above work items.

Measurement and Payment

Response for Erosion Control will be measured and paid for by counting the actual number of times the subcontractor moves onto the project, including borrow and waste sites, and satisfactorily completes an erosion control action described in Form 1675. The provisions of Article 104-5 of the *Standard Specifications* will not apply to this item of work.

Payment will be made under:

Pay Item	Pay Unit
Response for Erosion Control	Each

MINIMIZE REMOVAL OF VEGETATION:

The Contractor shall minimize removal of vegetation at stream banks and disturbed areas within the project limits as directed.

STOCKPILE AREAS:

The Contractor shall install and maintain erosion control devices sufficient to contain sediment around any erodible material stockpile areas as directed.

ACCESS AND HAUL ROADS:

At the end of each working day, the Contractor shall install or re-establish temporary diversions or earth berms across access/haul roads to direct runoff into sediment devices. Silt fence sections that are temporarily removed shall be reinstalled across access/haul roads at the end of each working day.

WASTE AND BORROW SOURCES:

Payment for temporary erosion control measures, except those made necessary by the Contractor's own negligence or for his own convenience, will be paid for at the appropriate contract unit price for the devices or measures utilized in borrow sources and waste areas.

No additional payment will be made for erosion control devices or permanent seeding and mulching in any commercial borrow or waste pit. All erosion and sediment control practices that may be required on a commercial borrow or waste site will be done at the Contractor's expense.

TEMPORARY DIVERSION:

This work consists of installation, maintenance, and cleanout of *Temporary Diversions* in accordance with Section 1630 of the *Standard Specifications*. The quantity of excavation for installation and cleanout will be measured and paid for as *Silt Excavation* in accordance with Article 1630-4 of the *Standard Specifications*.

SAFETY FENCE AND JURISDICTIONAL FLAGGING:

Description

Safety Fence shall consist of furnishing materials, installing and maintaining polyethylene or polypropylene fence along the outside riparian buffer, wetland, or water boundary, or other boundaries located within the construction corridor to mark the areas that have been approved to infringe within the buffer, wetland, endangered vegetation, culturally sensitive areas or water. The fence shall be installed prior to any land disturbing activities.

Interior boundaries for jurisdictional areas noted above shall be delineated by stakes and highly visible flagging.

Jurisdictional boundaries at staging areas, waste sites, or borrow pits, whether considered outside or interior boundaries shall be delineated by stakes and highly visible flagging.

Materials

(A) Safety Fencing

Polyethylene or polypropylene fence shall be a highly visible preconstructed safety fence approved by the Engineer. The fence material shall have an ultraviolet coating.

Either wood posts or steel posts may be used. Wood posts shall be hardwood with a wedge or pencil tip at one end, and shall be at least 5 ft. in length with a minimum nominal 2" x 2" cross section. Steel posts shall be at least 5 ft. in length, and have a minimum weight of 0.85 lb/ft of length.

(B) Boundary Flagging

Wooden stakes shall be 4 feet in length with a minimum nominal 3/4" x 1-3/4" cross section. The flagging shall be at least 1" in width. The flagging material shall be vinyl and shall be orange in color and highly visible.

Construction Methods

No additional clearing and grubbing is anticipated for the installation of this fence. The fence shall be erected to conform to the general contour of the ground.

(A) Safety Fencing

Posts shall be set at a maximum spacing of 10 ft., maintained in a vertical position and hand set or set with a post driver. If hand set, all backfill material shall be thoroughly tamped. Wood posts may be sharpened to a dull point if power driven. Posts damaged by power driving shall be removed and replaced prior to final acceptance. The tops of all wood posts shall be cut at a 30-degree angle. The wood posts may, at the option of the Contractor, be cut at this angle either before or after the posts are erected.

The fence geotextile shall be attached to the wood posts with one 2" galvanized wire staple across each cable or to the steel posts with wire or other acceptable means.

Place construction stakes to establish the location of the safety fence in accordance with Article 105-9 or Article 801-1 of the *Standard Specifications.* No direct pay will be made for the staking of the safety fence. All stakeouts for safety fence shall be considered incidental to the work being paid for as "Construction Surveying", except that where there is no pay item for construction surveying, all safety fence stakeout will be performed by state forces.

The Contractor shall be required to maintain the safety fence in a satisfactory condition for the duration of the project as determined by the Engineer.

(B) Boundary Flagging

Boundary flagging delineation of interior boundaries shall consist of wooden stakes on 25 feet maximum intervals with highly visible orange flagging attached. Stakes shall be installed a minimum of 6" into the ground. Interior boundaries may be staked on a tangent that runs parallel to buffer but must not encroach on the buffer at any location. Interior boundaries of hand clearing shall be identified with a different colored flagging to distinguish it from mechanized clearing.

Boundary flagging delineation of interior boundaries will be placed in accordance with Article 105-9 or Article 801-1 of the *Standard Specifications*. No direct pay will be made for delineation of the interior boundaries. This delineation will be considered incidental to the work being paid for as *Construction Surveying,* except that where there is no pay item or construction surveying the cost of boundary flagging delineation shall be included in the unit prices bid for the various items in the contract. Installation for delineation of all jurisdictional boundaries at

staging areas, waste sites, or borrow pits shall consist of wooden stakes on 25 feet maximum intervals with highly visible orange flagging attached. Stakes shall be installed a minimum of 6" into the ground. Additional flagging may be placed on overhanging vegetation to enhance visibility but does not substitute for installation of stakes.

Installation of boundary flagging for delineation of all jurisdictional boundaries at staging areas, waste sites, or borrow pits shall be performed in accordance with Subarticle 230-4(B)(3)(d) or Subarticle 802-2(F) of the *Standard Specifications*. No direct pay will be made for this delineation, as the cost of same shall be included in the unit prices bid for the various items in the contract.

The Contractor shall be required to maintain alternative stakes and highly visible flagging in a satisfactory condition for the duration of the project as determined by the Engineer.

Measurement and Payment

Safety Fence will be measured and paid as the actual number of linear feet of polyethylene or polypropylene fence installed in place and accepted. Such payment will be full compensation including but not limited to furnishing and installing fence geotextile with necessary posts and post bracing, staples, tie wires, tools, equipment and incidentals necessary to complete this work.

Payment will be made under:

Pay Item	Pay Unit
Safety Fence	Linear Foot

PERMANENT SOIL REINFORCEMENT MAT:

Description

This work consists of furnishing and placing *Permanent Soil Reinforcement Mat*, of the type specified, over previously prepared areas as directed.

Materials

The product shall be a permanent erosion control reinforcement mat and shall be constructed of synthetic or a combination of coconut and synthetic fibers evenly distributed throughout the mat between a bottom UV stabilized netting and a heavy duty UV stabilized top net. The matting shall be stitched together with UV stabilized polypropylene thread to form a permanent three-dimensional structure. The mat shall have the following minimum physical properties:

Property	Test Method	Value	Unit
Light Penetration	ASTM D6567	9	%
Thickness	ASTM D6525	0.40	in
Mass Per Unit Area	ASTM D6566	0.55	lb/sy
Tensile Strength	ASTM D6818	385	lb/ft
Elongation (Maximum)	ASTM D6818	49	%

Resiliency	ASTM D1777	>70	%
UV Stability *	ASTM D4355	≥80	%
Porosity (Permanent Net)	ECTC Guidelines	≥85	%
Maximum Permissible Shear Stress (Vegetated)	Performance Bench Test	≥8.0	lb/ft^2
Maximum Allowable Velocity (Vegetated)	Performance Bench Test	≥16.0	ft/s

*ASTM D1682 Tensile Strength and % strength retention of material after 1000 hours of exposure.

Submit a certification (Type 1, 2, or 3) from the manufacturer showing:

(A) the chemical and physical properties of the mat used, and
(B) conformance of the mat with this specification.

Construction Methods

Matting shall be installed in accordance with Subarticle 1631-3(B) of the *Standard Specifications*.

All areas to be protected with the mat shall be brought to final grade and seeded in accordance with Section 1660 of the *Standard Specifications*. The surface of the soil shall be smooth, firm, stable and free of rocks, clods, roots or other obstructions that would prevent the mat from lying in direct contact with the soil surface. Areas where the mat is to be placed will not need to be mulched.

Measurement and Payment

Permanent Soil Reinforcement Mat will be measured and paid for as the actual number of square yards measured along the surface of the ground over which Permanent Soil Reinforcement Mat is installed and accepted. Overlaps will not be included in the measurement, and will be considered as incidental to the work. Such payment shall be full compensation for furnishing and installing the mat, including overlaps, and for all required maintenance.

Payment will be made under:

Pay Item	Pay Unit
Permanent Soil Reinforcement Mat	Square Yard

TIERED SKIMMER BASIN WITH BAFFLES:

Description

Provide a tiered skimmer basin to remove sediment from construction site runoff at locations shown in the erosion control plans. See the Tiered Skimmer Basin Detail sheet provided in the erosion control plans. Tiered Skimmer Basins shall be installed in areas where topography

creates a large elevation difference between the inlet and outlet of a single skimmer basin. Work includes constructing sediment basins, installation of coir fiber baffles, installation of temporary slope drains, furnishing, installation and cleanout of Faircloth Skimme rs or other approved equivalent device, providing and placing stone pad on bottom of basin underneath skimmer device, providing and placing geotextile emergency spillway liners, providing coir fiber mat stabilization for the skimmer outlet, disposing of excess materials, removing temporary slope drains, coir fiber baffles, geotextile liner and skimmer device, backfilling basin area with suitable material and providing proper drainage when basin area is abandoned.

Materials

Item	**Section**
Stone for Erosion Control, Class B	1042
Geotextile for Soil Stabilization, Type 4	1056
Fertilizer for Temporary Seeding	1060-2
Seed for Temporary Seeding	1060-4
Seeding and Mulching	1060-4
Matting for Erosion Control	1060-8
Staples	1060-8
Coir Fiber Mat	1060-14
Temporary Slope Drain	1622-2
Coir Fiber Baffle	1640

Provide appropriately sized Faircloth skimmer or other approved equivalent device.

Provide Schedule 40 PVC pipe with a length of 6 ft. to attach to the skimmer and the coupling connection to serve as the arm pipe. For skimmer sizes of 2.5 in. and smaller, the arm pipe diameter shall be 1.5 inches. For skimmer sizes of 3 in. and larger, refer to manufacturer recommendation.

Provide 4" diameter Schedule 40 PVC pipe to attach to coupling connection of Faircloth skimmer to serve as the barrel pipe through the earthen dam.

Anchors: Staples, stakes, or reinforcement bars shall be used as anchors.

Wooden Stakes:

Provide hardwood stakes 12"- 24" long with a 2" x 2" nominal square cross section. One end of the stake must be sharpened or beveled to facilitate driving through the coir fiber mat and down into the underlying soil. The other end of the stake needs to have a 1"- 2" long head at the top with a 1"- 2" notch following to catch and secure the coir fiber mat.

Steel Reinforcement Bars:

Provide uncoated #10 steel reinforcement bars 24" nominal length. The bars shall have a 4" diameter bend at one end with a 4" straight section at the tip to catch and secure the coir fiber mat.

Staples:

Provide staples made of 0.125" diameter new steel wire formed into a *u* shape not less than 12" in length with a throat of 1" in width.

Construction Methods

Excavate basins according to the erosion control plans with basin surface free of obstructions, debris, and pockets of low-density material. Install temporary slope drains and construct the emergency spillways according to the Tiered Skimmer Basin Detail sheet in the erosion control plans. Construct the coir fiber baffles according to *Roadway Standard Drawings* No. 1640.01 and Section 1640 of the *Standard Specifications*. Multiple upper basins, or Modified Silt Basins Type 'B' as labeled on the detail, may be required based on site conditions and as directed.

Install Faircloth skimmer or other approved equivalent device according to manufacturer recommendations. Install 4" Schedule 40 PVC pipe into dam on the lower side of basin 1 ft. from the bottom of the basin and according to the detail, and attach the 6 ft. arm pipe to the coupling connection and Faircloth skimmer according to manufacturer recommendations. Attach the rope included with the skimmer to the tee between the vent socket and the tube inlet, and the other end to a wooden stake or metal post. Clean out skimmer device when it becomes clogged with sediment and/or debris and is unable to float at the top of water in skimmer basin. Take appropriate measures to avoid ice accumulation in the skimmer device. Construct a stone pad of Class B stone directly underneath the skimmer device at bottom of basin. The pad shall be a minimum of 12" in height, and shall have a minimum cross sectional area of 4 ft. by 4 ft.

Install a minimum of 2 (two) temporary slope drains to dewater the upper basin to the lower basin. The slope drains shall be installed a minimum of 6 inches, or one radius width of the temporary slope drain pipe, below the base of the emergency spillway section of the upper basin. The outlet of the slope drains shall be placed on the bottom elevation of the lower basin.

Line emergency spillways with geotextile unrolled in the direction of flow and lay smoothly but loosely on soil surface without creases. Bury edges of geotextile in a trench at least 5" deep and tamp firmly. If geotextile for emergency spillways is not one continuous piece of material, make horizontal overlaps a minimum of 18" with upstream geotextile overlapping the downstream geotextile. Secure geotextile with eleven gauge wire staples shaped into a *u* shape with a length of not less than 12" and a throat not less than 1" in width. Place staples along outer edges and throughout the geotextile a maximum of 3 ft. horizontally and vertically. Geotextile shall be placed to the bottom and across the entire width of the basin according to the Tiered Skimmer Basin with Baffles detail.

At the skimmer outlet, provide a smooth soil surface free from stones, clods, or debris that will prevent contact of the coir fiber matting with the soil. Unroll the matting and apply without stretching such that it will lie smoothly but loosely on the soil surface. Wooden stakes, reinforcement bars, or staples may be used as anchors in accordance with the details in the plans and as directed. Place anchors across the matting at the ends approximately 1 ft. apart. Place anchors along the outer edges and down the center of the matting 3 ft. apart.

All bare side slope sections of the skimmer basin shall be seeded with a temporary or permanent seed mix as directed and in accordance with Articles 1620-3, 1620-4, 1620-5, 1660-4, 1660-5 and 1660-7 of the *Standard Specifications*. Straw or excelsior matting shall be installed on all bare side slope sections immediately upon the completion of seeding and in accordance with Article 1631-3 of the *Standard Specifications*.

Measurement and Payment

Silt Excavation will be measured and paid for in accordance with Article 1630-4 of the *Standard Specifications*, as calculated from the typical section throughout the length of the basin as shown on the final approved plans.

Geotextile for Soil Stabilization will be measured and paid for in accordance with Article 270-4 of the *Standard Specifications*.

Coir Fiber Baffles will be measured and paid for in accordance with Article 1640-4 of the *Standard Specifications*.

__" *Skimmer* will be measured in units of each. __" *Skimmer* will be measured and paid for as the maximum number of each size skimmer acceptably installed and in use at any one time during the life of the project. Barrel and arm pipe, cleanout, relocation and reinstallation of __" *Skimmer* is considered incidental to the measurement of the quantity of __" *Skimmer* and no separate payment will be made. No separate payment shall be made if __" *Skimmer*, barrel and/or arm pipe(s) are damaged by ice accumulation.

Coir Fiber Mat will be measured and paid for as the actual number of square yards measured along the surface of the ground over which coir fiber mat is installed and accepted.

Temporary Slope Drain will be measured and paid for in accordance with Article 1622-4 of the *Standard Specifications*.

Stone for Erosion Control, Class __ will be measured and paid for in accordance with Article 1610-4 of the *Standard Specifications*.

Seeding and Mulching will be measured and paid for in accordance with Article 1660-8 of the *Standard Specifications*.

Seed for Temporary Seeding will be measured and paid for in accordance with Article 1620-6 of the *Standard Specifications*.

Fertilizer for Temporary Seeding will be measured and paid for in accordance with Article 1620-6 of the *Standard Specifications*.

Matting for Erosion Control will be measured and paid for in accordance with Article 1631-4 of the *Standard Specifications*.

No measurement will be made for other items or for over excavation or stockpiling.

Payment will be made under:

Pay Item	**Pay Unit**
__" Skimmer	Each
Coir Fiber Mat	Square Yard

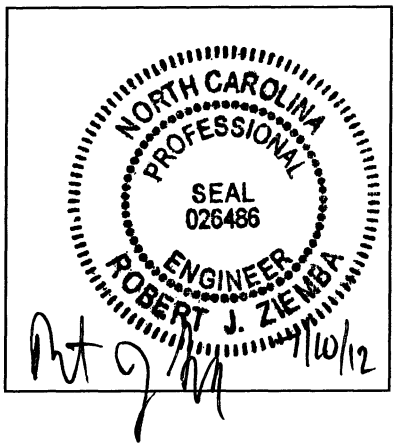

U-0624

Project Special Provisions
(Version 12.1)
Signals and Intelligent Transportation Systems

Prepared By: R Hough
10-Jul-12

Contents

1. SIGNAL HEADS 2
1.1. MATERIALS 2
A. General: 2
B. Vehicle Signal Heads: 3
C. Pedestrian Signal Heads: 5
D. Signal Cable: 6
2. CONTROLLERS WITH CABINETS 7
2.1. MATERIALS – TYPE 2070L CONTROLLERS 7
2.2. MATERIALS – GENERAL CABINETS 7
2.3. MATERIALS – TYPE 170E CABINETS 8
A. Type 170 E Cabinets General: 8
B. Type 170 E Cabinet Electrical Requirements: 8
C. Type 170 E Cabinet Physical Requirements: 14
D. Model 2018 Enhanced Conflict Monitor: 17
2.4. MATERIALS – TYPE 170 DETECTOR SENSOR UNITS 25
3. PUSH BUTTON INTEGRATED ACCESSIBLE PEDESTRIAN SIGNAL (APS) 25
3.1. DESCRIPTION 25
3.2. MATERIALS 25
3.3. CONSTRUCTION METHODS 26
3.4. MEASUREMENT AND PAYMENT 27

1. SIGNAL HEADS

1.1. MATERIALS

A. General:

Fabricate vehicle signal head housings and end caps from die-cast aluminum. Fabricate 16-inch pedestrian signal head housings and end caps from die-cast aluminum. Provide visor mounting screws, door latches, and hinge pins fabricated from stainless steel. Provide interior screws, fasteners, and metal parts fabricated from stainless steel or corrosion resistant material.

Fabricate tunnel and traditional visors from sheet aluminum.

Paint all surfaces inside and outside of signal housings and doors. Paint outside surfaces of tunnel and traditional visors, messenger cable mounting assemblies, pole and pedestal mounting assemblies, and pedestrian pushbutton housings. Have electrostatically-applied, fused-polyester paint in highway yellow (Federal Standard 595C, Color Chip Number 13538) a minimum of 2.5 to 3.5 mils thick. Do not apply paint to the latching hardware or rigid vehicle signal head mounting brackets for mast-arm attachments.

Have the interior surfaces of tunnel and traditional visors painted an alkyd urea black synthetic baking enamel with a minimum gloss reflectance and meeting the requirements of MIL-E-10169, "Enamel Heat Resisting, Instrument Black."

For pole mounting, provide side of pole mounting assemblies with framework and all other hardware necessary to make complete, watertight connections of the signal heads to the poles and pedestals. Fabricate the mounting assemblies and frames from aluminum with all necessary hardware, screws, washers, etc. to be stainless steel. Provide mounting fittings that match the positive locking device on the signal head with the serrations integrally cast into the brackets. Provide upper and lower pole plates that have a 1 ¼-inch vertical conduit entrance hubs with the hubs capped on the lower plate and 1 ½-inch horizontal hubs. Ensure that the assemblies provide rigid attachments to poles and pedestals so as to allow no twisting or swaying of the signal heads. Ensure that all raceways are free of sharp edges and protrusions, and can accommodate a minimum of ten Number 14 AWG conductors.

For pedestal mounting, provide a post-top slipfitter mounting assembly that matches the positive locking device on the signal head with serrations integrally cast into the slipfitter. Provide stainless steel hardware, screws, washers, etc. Provide a minimum of six 3/8 X 3/4-inch long square head bolts for attachment to pedestal. Provide a center post for multi-way slipfitters.

For light emitting diode (LED) traffic signal modules, provide the following requirements for inclusion on the Department's Qualified Products List for traffic signal equipment.

1. Sample submittal,
2. Third-party independent laboratory testing results for each submitted module with evidence of testing and conformance with all of the Design Qualification Testing specified in section 6.4 of each of the following Institute of Transportation Engineers (ITE) specifications:
   - Vehicle Traffic Control Signal Heads – Light Emitting Diode (LED) Circular Signal Supplement
   - Vehicle Traffic Control Signal Heads – Light Emitting Diode (LED) Vehicle Arrow Traffic Signal Supplement
   - Pedestrian Traffic Control Signal Indications –Light Emitting Diode (LED) Signal Modules.

(Note: The Department currently recognizes two approved independent testing laboratories. They are Intertek ETL Semko and Light Metrics, Incorporated with Garwood Laboratories. Independent laboratory tests from other laboratories may be considered as part of the QPL submittal at the discretion of the Department,

3. Evidence of conformance with the requirements of these specifications,
4. A manufacturer's warranty statement in accordance with the required warranty, and
5. Submittal of manufacturer's design and production documentation for the model, including but not limited to, electrical schematics, electronic component values, proprietary part numbers, bill of materials, and production electrical and photometric test parameters.
6. Evidence of approval of the product to bear the Intertek ETL Verified product label for LED traffic signal modules.

In addition to meeting the performance requirements for the minimum period of 60 months, provide a written warranty against defects in materials and workmanship for the modules for a period of 60 months after installation of the modules. During the warranty period, the manufacturer must provide new replacement modules within 45 days of receipt of modules that have failed at no cost to the State. Repaired or refurbished modules may not be used to fulfill the manufacturer's warranty obligations. Provide manufacturer's warranty documentation to the Department during evaluation of product for inclusion on Qualified Products List (QPL).

B. Vehicle Signal Heads:

Comply with the ITE standard "Vehicle Traffic Control Signal Heads". Provide housings with provisions for attaching backplates.

Provide visors that are 10 inches in length for 12-inch vehicle signal heads.

Provide a termination block with one empty terminal for field wiring for each indication plus one empty terminal for the neutral conductor. Have all signal sections wired to the termination block. Provide barriers between the terminals that have terminal screws with a minimum Number 8 thread size and that will accommodate and secure spade lugs sized for a Number 10 terminal screw.

Mount termination blocks in the yellow signal head sections on all in-line vehicle signal heads. Mount the termination block in the red section on five-section vehicle signal heads.

Furnish vehicle signal head interconnecting brackets. Provide one-piece aluminum brackets less than 4.5 inches in height and with no threaded pipe connections. Provide hand holes on the bottom of the brackets to aid in installing wires to the signal heads. Lower brackets that carry no wires and are used only for connecting the bottom signal sections together may be flat in construction.

For messenger cable mounting, provide messenger cable hangers, wire outlet bodies, balance adjusters, bottom caps, wire entrance fitting brackets, and all other hardware necessary to make complete, watertight connections of the vehicle signal heads to the messenger cable. Fabricate mounting assemblies from malleable iron or steel and provide serrated rings made of aluminum. Provide messenger cable hangers and balance adjusters that are galvanized before being painted. Fabricate balance adjuster eyebolt and eyebolt nut from stainless steel or galvanized malleable iron. Provide messenger cable hangers with U-bolt clamps. Fabricate washers, screws, bolts, clevis pins, cotter pins, nuts, and U-bolt clamps from stainless steel.

Provide LED vehicular traffic signal modules (hereafter referred to as modules) that consist of an assembly that uses LEDs as the light source in lieu of an incandescent lamp for use in traffic signal sections. Use LEDs that are aluminum indium gallium phosphorus (AlInGaP) technology for red and yellow indications and indium gallium nitride (InGaN) for green indications. Install the ultra bright type LEDs that are rated for 100,000 hours of continuous operation from -40°F to +165°F. Design

modules to have a minimum useful life of 60 months and to meet all parameters of this specification during this period of useful life.

For the modules, provide spade terminals crimped to the lead wires and sized for a #10 screw connection to the existing terminal block in a standard signal head. Do not provide other types of crimped terminals with a spade adapter.

Ensure the power supply is integral to the module assembly. On the back of the module, permanently mark the date of manufacture (month & year) or some other method of identifying date of manufacture.

Tint the red, yellow and green lenses to correspond with the wavelength (chromaticity) of the LED. Transparent tinting films are unacceptable. Provide a lens that is integral to the unit with a smooth outer surface.

1. LED Circular Signal Modules:

Provide modules in the following configurations: 12-inch circular sections, and 8-inch circular sections. All makes and models of LED modules purchased for use on the State Highway System shall appear on the current NCDOT Traffic Signal Qualified Products List (QPL).

Provide the manufacturer's model number and the product number (assigned by the Department) for each module that appears on the 2012 or most recent Qualified Products List. In addition, provide manufacturer's certification in accordance with Article 106-3 of the *Standard Specifications,* that each module meets or exceeds the ITE "Vehicle Traffic Control Signal Heads – Light Emitting Diode (LED) Circular Signal Supplement" dated June 27, 2005 (hereafter referred to as VTCSH Circular Supplement) and other requirements stated in this specification.

Provide modules that meet the following requirements when tested under the procedures outlined in the VTCSH Circular Supplement:

Module Type	Max. Wattage at 165° F	Nominal Wattage at 77° F
12-inch red circular	17	11
12-inch green circular	15	15

For yellow circular signal modules, provide modules tested under the procedures outlined in the VTCSH Circular Supplement to insure power required at 77° F is 22 Watts or less for the 12-inch circular module.

Note: Use a wattmeter having an accuracy of ±1% to measure the nominal wattage and maximum wattage of a circular traffic signal module. Power may also be derived from voltage, current and power factor measurements.

2. LED Arrow Signal Modules

Provide 12-inch omnidirectional arrow signal modules. All makes and models of LED modules purchased for use on the State Highway System shall appear on the current NCDOT Traffic Signal Qualified Products List (QPL).

Provide the manufacturer's model number and the product number (assigned by the Department) for each module that appears on the 2012 or most recent Qualified Products List. In addition, provide manufacturer's certification in accordance with Article 106-3 of the *Standard Specifications,* that each module meets or exceeds the requirements for 12-inch omnidirectional modules specified in the ITE "Vehicle Traffic Control Signal Heads – Light Emitting Diode (LED) Vehicle Arrow Traffic Signal Supplement" dated July 1, 2007 (hereafter referred to as VTCSH Arrow Supplement) and other requirements stated in this specification.

Provide modules that meet the following requirements when tested under the procedures outlined in the VTCSH Arrow Supplement:

Module Type	Max. Wattage at 165° F	Nominal Wattage at 77° F
12-inch red arrow	12	9
12-inch green arrow	11	11

For yellow arrow signal modules, provide modules tested under the procedures outlined in the VTCSH Arrow Supplement to insure power required at 77° F is 12 Watts or less.

Note: Use a wattmeter having an accuracy of ±1% to measure the nominal wattage and maximum wattage of an arrow traffic signal module. Power may also be derived from voltage, current and power factor measurements.

C. Pedestrian Signal Heads:

Provide pedestrian signal heads with international symbols that meet the MUTCD. Do not provide letter indications.

Comply with the ITE standard for "Pedestrian Traffic Control Signal Indications" and the following sections of the ITE standard for "Vehicle Traffic Control Signal Heads" in effect on the date of advertisement:

- Section 3.00 - "Physical and Mechanical Requirements"
- Section 4.01 - "Housing, Door, and Visor: General"
- Section 4.04 - "Housing, Door, and Visor: Materials and Fabrication"
- Section 7.00 - "Exterior Finish"

Provide a double-row termination block with three empty terminals and number 10 screws for field wiring. Provide barriers between the terminals that accommodate a spade lug sized for number 10 terminal screws. Mount the termination block in the hand section. Wire all signal sections to the terminal block.

Where required by the plans, provide 16-inch pedestrian signal heads with traditional three-sided, rectangular visors, 6 inches long.

Provide 2-inch diameter pedestrian push-buttons with weather-tight housings fabricated from die-cast aluminum and threading in compliance with the NEC for rigid metal conduit. Provide a weep hole in the housing bottom and ensure that the unit is vandal resistant.

Provide push-button housings that are suitable for mounting on flat or curved surfaces and that will accept 1/2-inch conduit installed in the top. Provide units that have a heavy duty push-button assembly with a sturdy, momentary, normally-open switch. Have contacts that are electrically insulated from the housing and push-button. Ensure that the push-buttons are rated for a minimum of 5 mA at 24 volts DC and 250 mA at 12 volts AC.

Provide standard R10-3 signs with mounting hardware that comply with the MUTCD in effect on the date of advertisement. Provide R10-3E signs for countdown pedestrian heads and R10-3B for non-countdown pedestrian heads.

Design the LED pedestrian traffic signal modules (hereafter referred to as modules) for installation into standard pedestrian traffic signal sections that do not contain the incandescent signal section reflector, lens, eggcrate visor, gasket, or socket. Provide modules that consist of an assembly that uses LEDs as the light source in lieu of an incandescent lamp. Use LEDs that are of the latest aluminum indium gallium phosphorus (AlInGaP) technology for the Portland Orange hand and countdown displays. Use LEDs that are of the latest indium gallium nitride (InGaN) technology for

the Lunar White walking man displays. Install the ultra-bright type LEDs that are rated for 100,000 hours of continuous operation from -40°F to +165°F. Design modules to have a minimum useful life of 60 months and to meet all parameters of this specification during this period of useful life.

Design all modules to operate using a standard 3 - wire field installation. Provide spade terminals crimped to the lead wires and sized for a #10 screw connection to the existing terminal block in a standard pedestrian signal housing. Do not provide other types of crimped terminals with a spade adapter.

Ensure the power supply is integral to the module assembly. On the back of the module, permanently mark the date of manufacture (month & year) or some other method of identifying date of manufacture.

Provide modules in the following configuration: 16-inch displays which have the solid hand/walking man overlay on the left and the countdown on the right, and 12-inch displays which have the solid hand/walking man module as an overlay. All makes and models of LED modules purchased for use on the State Highway System shall appear on the current NCDOT Traffic Signal Qualified Products List (QPL).

Provide the manufacturer's model number and the product number (assigned by the Department) for each module that appears on the 2012 or most recent Qualified Products List. In addition, provide manufacturer's certification in accordance with Article 106-3 of the *Standard Specifications,* that each module meets or exceeds the ITE "Pedestrian Traffic Control Signal Indicators - Light Emitting Diode (LED) Signal Modules" dated August 04, 2010 (hereafter referred to as PTCSI Pedestrian Standard) and other requirements stated in this specification.

Provide modules that meet the following requirements when tested under the procedures outlined in the PTCSI Pedestrian Standard:

Module Type	Max. Wattage at 165° F	Nominal Wattage at 77° F
Hand Indication	16	13
Walking Man Indication	12	9
Countdown Indication	16	13

Note: Use a wattmeter having an accuracy of ±1% to measure the nominal wattage and maximum wattage of a circular traffic signal module. Power may also be derived from voltage, current and power factor measurements.

Provide module lens that is hard coated or otherwise made to comply with the material exposure and weathering effects requirements of the Society of Automotive Engineers (SAE) J576. Ensure all exposed components of the module are suitable for prolonged exposure to the environment, without appreciable degradation that would interfere with function or appearance.

Ensure the countdown display continuously monitors the traffic controller to automatically learn the pedestrian phase time and update for subsequent changes to the pedestrian phase time.

Ensure the countdown display begins normal operation upon the completion of the preemption sequence and no more than one pedestrian clearance cycle.

D. Signal Cable:

Furnish 16-4 and 16-7 signal cable that complies with IMSA specification 20-1 except provide the following conductor insulation colors:

- For 16-4 cable: white, yellow, red, and green

- For 16-7 cable: white, yellow, red, green, yellow with black stripe tracer, red with black stripe tracer, and green with black stripe tracer. Apply continuous stripe tracer on conductor insulation with a longitudinal or spiral pattern.

Provide a ripcord to allow the cable jacket to be opened without using a cutter. IMSA specification 19-1 will not be acceptable. Provide a cable jacket labeled with the IMSA specification number and provide conductors constructed of stranded copper.

2. CONTROLLERS WITH CABINETS

2.1. MATERIALS – TYPE 2070L CONTROLLERS

Conform to CALTRANS *Transportation Electrical Equipment Specifications* (TEES) (dated August 16, 2002, plus Errata 1 dated October 27, 2003 and Errata 2 dated June 08, 2004) except as required herein.

Furnish Model 2070L controllers. Ensure that removal of the CPU module from the controller will place the intersection into flash.

The Department will provide software at the beginning of the burning-in period. Contractor shall give 5 working days notice before needing software. Program software provided by the Department.

Provide model 2070L controllers with the latest version of OS9 operating software and device drivers, composed of the unit chassis and at a minimum the following modules and assemblies:

- MODEL 2070 1B, CPU Module, Single Board
- MODEL 2070-2A, Field I/O Module (FI/O)
- MODEL 2070-3B, Front Panel Module (FP), Display B (8x40)
- MODEL 2070-4A, Power Supply Module, 10 AMP
- MODEL 2070-7A, Async Serial Com Module (9-pin RS-232)

For each master location and central control center, furnish a U.S. Robotics V.92 or approved equivalent auto-dial/auto-answer external modem to accomplish the interface to the Department-furnished microcomputers. Include all necessary hardware to ensure telecommunications.

2.2. MATERIALS – GENERAL CABINETS

Provide a moisture resistant coating on all circuit boards.

Provide one 20 mm diameter radial lead UL-recognized metal oxide varistor (MOV) between each load switch field terminal and equipment ground. Electrical performance is outlined below.

PROPERTIES OF MOV SURGE PROTECTOR	
Maximum Continuous Applied Voltage at 185° F	150 VAC (RMS) 200 VDC
Maximum Peak 8x20µs Current at 185° F	6500 A
Maximum Energy Rating at 185° F	80 J
Voltage Range 1 mA DC Test at 77° F	212-268 V
Max. Clamping Voltage 8x20µs, 100A at 77° F	395 V
Typical Capacitance (1 MHz) at 77° F	1600 pF

Provide a power line surge protector that is a two-stage device that will allow connection of the radio frequency interference filter between the stages of the device. Ensure that a maximum

continuous current is at least 10A at 120V. Ensure that the device can withstand a minimum of 20 peak surge current occurrences at 20,000A for an 8x20 microsecond waveform. Provide a maximum clamp voltage of 395V at 20,000A with a nominal series inductance of 200µh. Ensure that the voltage does not exceed 395V. Provide devices that comply with the following:

Frequency (Hz)	Minimum Insertion Loss (dB)
60	0
10,000	30
50,000	55
100,000	50
500,000	50
2,000,000	60
5,000,000	40
10,000,000	20
20,000,000	25

2.3. MATERIALS – TYPE 170E CABINETS

A. Type 170 E Cabinets General:

Conform to the city of Los Angeles' Specification No. 54-053-08, *Traffic Signal Cabinet Assembly Specification* (dated July 2008), except as required herein.

Furnish model 336S pole mounted cabinets configured for 8 vehicle phases, 4 pedestrian phases, and 6 overlaps. When overlaps are required, provide auxiliary output files for the overlaps. Do not reassign load switches to accommodate overlaps unless shown on electrical details. Provide 336S pole mounted cabinets that are 46" high with 40" high internal rack assemblies.

Provide model 200 load switches, model 222 loop detector sensors, model 252 AC isolators, and model 242 DC isolators according to the electrical details. As a minimum, provide one (1) model 2018 conflict monitor, one (1) model 206L power supply unit, two (2) model 204 flashers, one (1) DC isolator (located in slot I14), and four (4) model 430 flash transfer relays (provide seven (7) model 430 flash transfer relays if auxiliary output file is installed) with each cabinet.

B. Type 170 E Cabinet Electrical Requirements:

Provide a cabinet assembly designed to ensure that upon leaving any cabinet switch or conflict monitor initiated flashing operation, the controller starts up in the programmed start up phases and start up interval.

Furnish two sets of non-fading cabinet wiring diagrams and schematics in a paper envelope or container and placed in the cabinet drawer.

All AC+ power is subject to radio frequency signal suppression.

Provide surge suppression in the cabinet for each type of cabinet device. Provide surge protection for the full capacity of the cabinet input file. Provide surge suppression devices that operate properly over a temperature range of -40° F to +185° F. Ensure the surge suppression devices provide both common and differential modes of protection.

Provide a pluggable power line surge protector that is installed on the back of the PDA (power distribution assembly) chassis to filter and absorb power line noise and switching transients. Ensure the device incorporates LEDs for failure indication and provides a dry relay contact closure for the purpose of remote sensing. Ensure the device meets the following specifications:

Peak Surge Current (Single pulse, 8x20µs).....20,000A

Occurrences (8x20µs waveform).....10 minimum @ 20,000A
Maximum Clamp Voltage.....395VAC
Operating Current.....15 amps
Response Time.....< 5 nanoseconds

Provide a loop surge suppressor for each set of loop terminals in the cabinet. Ensure the device meets the following specifications:

Peak Surge Current (6 times, 8x20µs)
(Differential Mode).....400A
(Common Mode).....1,000A
Occurrences (8x20µs waveform).....500 min @ 200A
Maximum Clamp Voltage
(Differential Mode @400A).....35V
(Common Mode @1,000A).....35V
Response Time.....< 5 nanoseconds
Maximum Capacitance.....35 pF

Provide a data communications surge suppressor for each communications line entering or leaving the cabinet. Ensure the device meets the following specifications:

Peak Surge Current (Single pulse, 8x20µs).....10,000A
Occurrences (8x20µs waveform).....100 min @ 2,000A
Maximum Clamp Voltage.....Rated for equipment protected
Response Time.....< 1 nanosecond
Maximum Capacitance.....1,500 pF
Maximum Series Resistance.....15Ω

Provide a DC signal surge suppressor for each DC input channel in the cabinet. Ensure the device meets the following specifications:

Peak Surge Current (Single pulse, 8x20µs).....10,000A
Occurrences (8x20µs waveform).....100 @ 2,000A
Maximum Clamp Voltage.....30V
Response Time.....< 1 nanosecond

Provide a 120 VAC signal surge suppressor for each AC+ interconnect signal input. Ensure the device meets the following specifications:

Peak Surge Current (Single pulse, 8x20µs).....20,000A
Maximum Clamp Voltage.....350VAC
Response Time.....< 200 nanoseconds
Discharge Voltage.....<200 Volts @ 1,000A
Insulation Resistance.....≥100 MΩ

Provide conductors for surge protection wiring that are of sufficient size (ampacity) to withstand maximum overcurrents which could occur before protective device thresholds are attained and current flow is interrupted.

If additional surge protected power outlets are needed to accommodate fiber transceivers, modems, etc., install a UL listed, industrial, heavy-duty type power outlet strip with a minimum rating of 15 A / 125 VAC, 60 Hz. Provide a strip that has a minimum of 3 grounded outlets. Ensure the power outlet strip plugs into one of the controller unit receptacles located on the rear of the PDA. Ensure power outlet strip is mounted securely; provide strain relief if necessary.

Provide a door switch in the front and a door switch in the rear of the cabinet that will provide the controller unit with a Door Ajar alarm when either the front or the rear door is open. Ensure the door switches apply DC ground to the Input File when either the front door or the rear door is open.

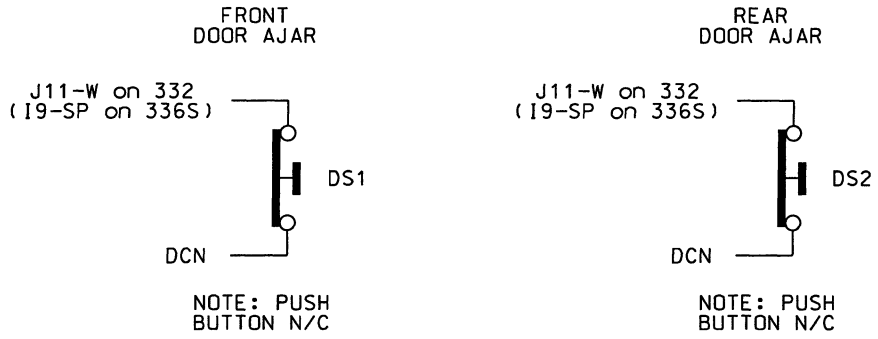

Furnish a fluorescent fixture in the rear across the top of the cabinet and another fluorescent fixture in the front across the top of the cabinet at a minimum. Ensure that the fixtures provide sufficient light to illuminate all terminals, labels, switches, and devices in the cabinet. Conveniently locate the fixtures so as not to interfere with a technician's ability to perform work on any devices or terminals in the cabinet. Provide a protective diffuser to cover exposed bulbs. Install 16 watt T-4 lamps in the fluorescent fixtures. Provide a door switch to provide power to each fixture when the respective door is open. Wire the fluorescent fixtures to the 15 amp ECB (equipment circuit breaker).

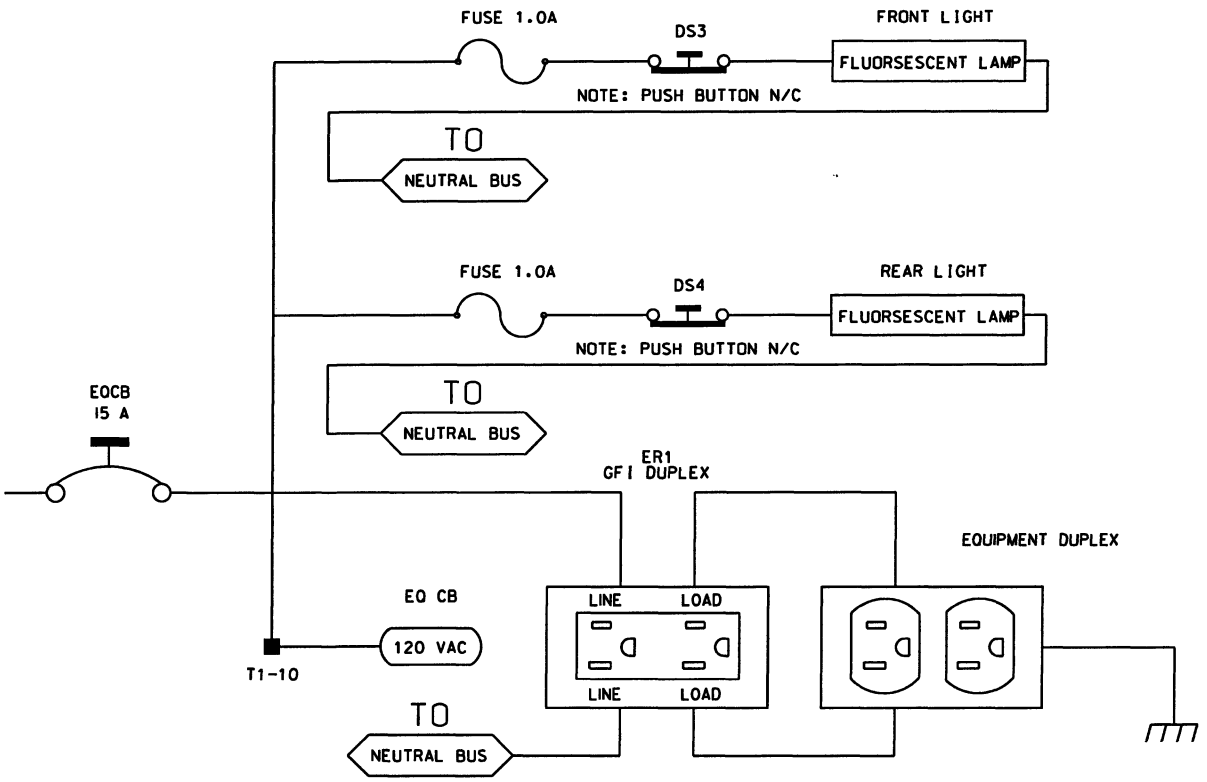

Furnish a police panel with a police panel door. For model 336S cabinets, mount the police panel on the rear door. Ensure that the police panel door permits access to the police panel when the main door is closed. Ensure that no rainwater can enter the cabinet even with the police panel door open. Provide a police panel door hinged on the right side as viewed from the front. Provide a police panel door lock that is keyed to a standard police/fire call box key. In addition to the requirements of LA Specification No. 54-053-08, provide the police panel with a toggle switch connected to switch the intersection operation between normal stop-and-go operation (AUTO) and manual operation (MANUAL). Ensure that manual control can be implemented using inputs and software such that the controller provides full programmed clearance times for the yellow clearance and red clearance for each phase while under manual control.

Provide a 1/4-inch locking phone jack in the police panel for a hand control to manually control the intersection. Provide sufficient room in the police panel for storage of a hand control and cord.

Ensure the 336S cabinet Input File is wired as follows:

336S Cabinet Port-Bit/C-1 Pin Assignment														
Slot #	1	2	3	4	5	6	7	8	9	10	11	12	13	14
C-1 (Spares)	59	60	61	62	63	64	65	66	75	76	77	78	79	80
Port	3-2	1-1	3-4	1-3	3-1	1-2	3-3	1-4	2-5	5-5	5-6	5-1	5-2	6-7
C-1	56	39	58	41	55	40	57	42	51	71	72	67	68	81
Port	2-1	1-5	2-3	1-7	2-2	1-6	2-4	1-8	2-6	5-7	5-8	5-3	5-4	6-8
C-1	47	43	49	45	48	44	50	46	52	73	74	69	70	82

For model 332 base mounted cabinets, ensure terminals J14-E and J14-K are wired together on the rear of the Input File. Connect TB9-12 (J14 Common) on the Input Panel to T1-2 (AC-) on the rear of the PDA.

Provide detector test switches mounted at the top of the cabinet rack or other convenient location which may be used to place a call on each of eight phases based on the chart below. Provide three positions for each switch: On (place call), Off (normal detector operation), and Momentary On (place momentary call and return to normal detector operation after switch is released). Ensure that the switches are located such that the technician can read the controller display and observe the intersection.

Connect detector test switches for cabinets as follows:

336S Cabinet		332 Cabinet	
Detector Call Switches	**Terminals**	**Detector Call Switches**	**Terminals**
Phase 1	I1-F	Phase 1	I1-W
Phase 2	I2-F	Phase 2	I4-W
Phase 3	I3-F	Phase 3	I5-W
Phase 4	I4-F	Phase 4	I8-W
Phase 5	I5-F	Phase 5	J1-W
Phase 6	I6-F	Phase 6	J4-W
Phase 7	I7-F	Phase 7	J5-W
Phase 8	I8-F	Phase 8	J8-W

Provide the PCB 28/56 connector for the conflict monitor unit (CMU) with 28 independent contacts per side, dual-sided with 0.156 inch contact centers. Provide the PCB 28/56 connector contacts with solder eyelet terminations. Ensure all connections to the PCB 28/56 connector are soldered to the solder eyelet terminations.

Ensure that all cabinets have the CMU connector wired according to the 332 cabinet connector pin assignments (include all wires for auxiliary output file connection). Wire pins 13, 16, R, and U of the CMU connector to a separate 4 pin plug, P1, as shown below. Provide a second plug, P2, which will mate with P1 and is wired to the auxiliary output file as shown below. Provide an additional plug, P3, which will mate with P1 and is wired to the pedestrian yellow circuits as shown below. When no auxiliary output file is installed in the cabinet, provide wires for the green and yellow inputs for channels 11, 12, 17, and 18, the red inputs for channels 17 and 18, and the wires for the P2 plug. Terminate the two-foot wires with ring type lugs, insulated, and bundled for optional use.

	P1		P2		P3	
PIN	**FUNCTION**	**CONN TO**	**FUNCTION**	**CONN TO**	**FUNCTION**	**CONN TO**
1	CH-9G	CMU-13	OLA-GRN	A123	2P-YEL	114
2	CH-9Y	CMU-16	OLA-YEL	A122	4P-YEL	105
3	CH-10G	CMU-R	OLB-GRN	A126	6P-YEL	120
4	CH-10Y	CMU-U	OLB-YEL	A125	8P-YEL	111

Connect the P20 terminal assembly (red monitor board) to a connector installed on the front of the type 2018 enhanced conflict monitor through a 3-1/2 foot 20-wire ribbon cable. Ensure that the

ribbon cable connector and the connector on the conflict monitor are keyed to ensure proper connection. Ensure that removal of the P20 ribbon cable will cause the conflict monitor to recognize a latching fault condition and place the cabinet into flashing operation.

Wire the P20 connector to the traffic signal red displays to provide inputs to the conflict monitor as shown below. Ensure the pedestrian Don't Walk circuits are wired to channels 13 through 16 of the P20 connector. When no auxiliary output file is installed in the cabinet, provide wires for channels 9 through 12 reds. Terminate the two-foot wires with ring type lugs, insulated, and bundled for optional use.

Pin #	Function	Pin #	Function
1	Channel 15 Red	11	Channel 9 Red
2	Channel 16 Red	12	Channel 8 Red
3	Channel 14 Red	13	Channel 7 Red
4	GND	14	Channel 6 Red
5	Channel 13 Red	15	Channel 5 Red
6	Special Function 2	16	Channel 4 Red
7	Channel 12 Red	17	Channel 3 Red
8	Special Function 1	18	Channel 2 Red
9	Channel 10 Red	19	Channel 1 Red
10	Channel 11 Red	20	Red Enable

Ensure the controller unit outputs to the auxiliary output file are pre-wired to the C5 connector. When no auxiliary output file is installed in the cabinet, connect the C5 connector to a storage socket located on the Input Panel or on the rear of the PDA.

In addition to the requirements of LA Specification No. 54-053-08, ensure relay K1 on the Power Distribution Assembly (PDA) is a four pole relay and K2 on the PDA is a two pole relay.

Provide a two pole, ganged circuit breaker for the flash bus circuit. Ensure the flash bus circuit breaker is an inverse time circuit breaker rated for 10 amps at 120 VAC with a minimum of 10,000 RMS symmetrical amperes short circuit current rating. Do not provide the auxiliary switch feature on the flash bus circuit breaker. Ensure the ganged flash bus circuit breaker is certified by the circuit breaker manufacturer to provide gang tripping operation.

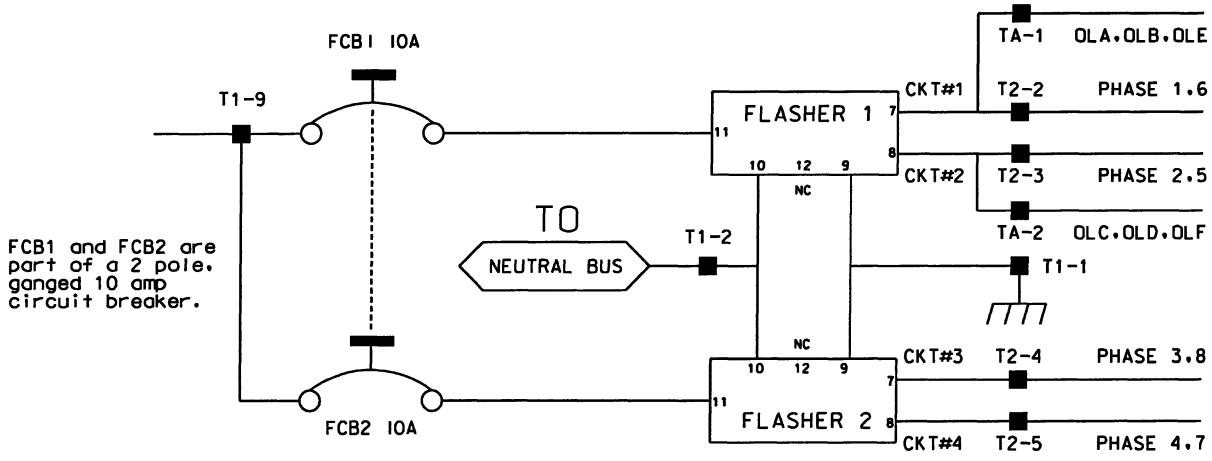

Ensure auxiliary output files are wired as follows:

AUXILIARY OUTPUT FILE TERMINAL BLOCK TA ASSIGNMENTS	
POSITION	**FUNCTION**
1	Flasher Unit #1, Circuit 1/FTR1 (OLA, OLB)/FTR3 (OLE)
2	Flasher Unit #1, Circuit 2/FTR2 (OLC, OLD)/FTR3 (OLF)
3	Flash Transfer Relay Coils
4	AC -
5	Power Circuit 5
6	Power Circuit 5
7	Equipment Ground Bus
8	NC

Provide four spare load resistors mounted in each cabinet. Ensure each load resistor is rated as shown in the table below. Wire one side of each load resistor to AC-. Connect the other side of each resistor to a separate terminal on a four (4) position terminal block. Mount the load resistors and terminal block either inside the back of Output File No. 1 or on the upper area of the Service Panel.

ACCEPTABLE LOAD RESISTOR VALUES	
VALUE (ohms)	**WATTAGE**
1.5K – 1.9 K	25W (min)
2.0K – 3.0K	10W (min)

Provide Model 200 load switches, Model 204 flashers, Model 242 DC isolators, Model 252 AC isolators, and Model 206L power supply units that conform to CALTRANS' "*Transportation Electrical Equipment Specifications*" dated March 12, 2009 with Erratum 1.

C. Type 170 E Cabinet Physical Requirements:

Do not mold, cast, or scribe the name "City of Los Angeles" on the outside of the cabinet door as specified in LA Specification No. 54-053-08. Do not provide a Communications Terminal Panel as specified in LA Specification No. 54-053-08. Do not provide terminal block TBB on the Service Panel. Do not provide Cabinet Verification Test Program software or associated test jigs as specified in LA Specification No. 54-053-08.

Furnish unpainted, natural, aluminum cabinet shells. Ensure that all non-aluminum hardware on the cabinet is stainless steel or a Department approved non-corrosive alternate.

Ensure the lifting eyes, gasket channels, police panel, and all supports welded to the enclosure and doors are fabricated from 0.125 inch minimum thickness aluminum sheet and meet the same standards as the cabinet and doors.

Provide front and rear doors with latching handles that allow padlocking in the closed position. Furnish 0.75 inch minimum diameter stainless steel handles with a minimum 0.5 inch shank. Place the padlocking attachment at 4.0 inches from the handle shank center to clear the lock and key. Provide an additional 4.0 inches minimum gripping length.

Provide Corbin #2 locks on the front and rear doors. Provide one (1) Corbin #2 and one (1) police master key with each cabinet. Ensure main door locks allow removal of keys in the locked position only.

Provide a surge protection panel with 16 loop surge protection devices and designed to allow sufficient free space for wire connection/disconnection and surge protection device replacement. For model 332 cabinets, provide an additional 20 loop surge protection devices. Provide an additional two AC+ interconnect surge devices to protect one slot and eight DC surge protection devices to protect four slots. Provide no protection devices on slot I14.

For pole mounted cabinets, mount surge protection devices for the AC+ interconnect inputs, inductive loop detector inputs, and low voltage DC inputs on a swing down panel assembly fabricated from sturdy aluminum. Attach the swing down panel to the bottom rear cabinet rack assembly using thumb screws. Ensure the swing down panel allows for easy removal of the input file without removing the surge protection panel assembly or its parts. Have the surge protection devices mounted horizontally on the panel and soldered to the feed through terminals of four 14 position terminal blocks with #8 screws mounted on the other side. Ensure the top row of terminals is connected to the upper slots and the bottom row of terminals is connected to the bottom slots. Provide a 15 position copper equipment ground bus attached to the field terminal side (outside) of the swing down panel for termination of loop lead-in shield grounds. Ensure that a Number 4 AWG green wire connects the surge protection panel assembly ground bus to the main cabinet equipment ground.

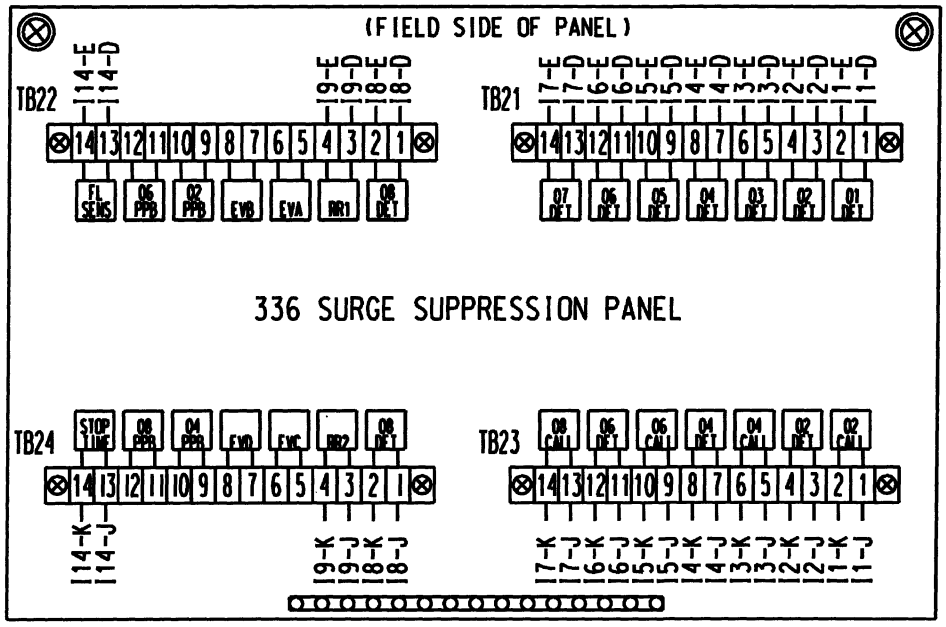

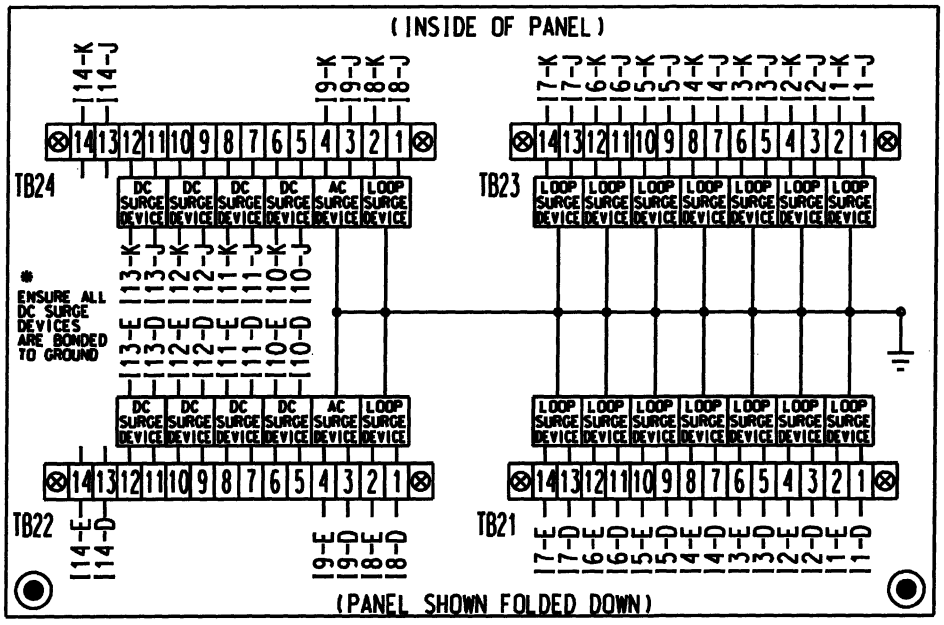

For base mounted cabinets, mount surge protection panels on the left side of the cabinet as viewed from the rear. Attach each panel to the cabinet rack assembly using bolts and make it easily removable. Mount the surge protection devices in vertical rows on each panel and connect the devices to one side of 12 position, double row terminal blocks with #8 screws. For each surge protection panel, terminate all grounds from the surge protection devices on a copper equipment ground bus attached to the surge protection panel. Wire the terminals to the rear of a standard input file using spade lugs for input file protection.

Provide permanent labels that indicate the slot and the pins connected to each terminal that may be viewed from the rear cabinet door. Label and orient terminals so that each pair of inputs is next to

each other. Indicate on the labeling the input file (I or J), the slot number (1-14) and the terminal pins of the input slots (either D & E for upper or J & K for lower).

Provide a minimum 14 x 16 inch pull out, hinged top shelf located immediately below controller mounting section of the cabinet. Ensure the shelf is designed to fully expose the table surface outside the controller at a height approximately even with the bottom of the controller. Ensure the shelf has a storage bin interior which is a minimum of 1 inch deep and approximately the same dimensions as the shelf. Provide an access to the storage area by lifting the hinged top of the shelf. Fabricate the shelf and slide from aluminum or stainless steel and ensure the assembly can support the 2070L controller plus 15 pounds of additional weight. Ensure shelf has a locking mechanism to secure it in the fully extended position and does not inhibit the removal of the 2070L controller or removal of cards inside the controller when fully extended. Provide a locking mechanism that is easily released when the shelf is to be returned to its non-use position directly under the controller.

D. Model 2018 Enhanced Conflict Monitor:

Furnish Model 2018 Enhanced Conflict Monitors that provide monitoring of 18 channels. Ensure each channel consists of a green, yellow, and red field signal input. Ensure that the conflict monitor meets or exceeds CALTRANS' Transportation Electrical Equipment Specifications dated March 12, 2009 with Erratum 1 (hereafter referred to as CALTRANS' 2009 TEES) for a model 210 monitor unit and other requirements stated in this specification.

Ensure the conflict monitor is provided with an 18 channel conflict programming card. Pin EE and Pin T of the conflict programming card shall be connected together. Pin 16 of the conflict programming card shall be floating. Ensure that the absence of the conflict programming card will cause the conflict monitor to trigger (enter into fault mode), and remain in the triggered state until the programming card is properly inserted and the conflict monitor is reset.

Provide a conflict monitor that incorporates LED indicators into the front panel to dynamically display the status of the monitor under normal conditions and to provide a comprehensive review of field inputs with monitor status under fault conditions. Ensure that the monitor indicates the channels that were active during a conflict condition and the channels that experienced a failure for all other per channel fault conditions detected. Ensure that these indications and the status of each channel are retained until the Conflict Monitor is reset. Furnish LED indicators for the following:

- AC Power (Green LED indicator)
- VDC Failed (Red LED indicator)
- WDT Error (Red LED indicator)
- Conflict (Red LED indicator)
- Red Fail (Red LED indicator)
- Dual Indication (Red LED indicator)
- Yellow/Clearance Failure (Red LED indicator)
- PCA/PC Ajar (Red LED indicator)
- Monitor Fail/Diagnostic Failure (Red LED indicator)
- 54 Channel Status Indicators (1 Red, 1 Yellow, and 1 Green LED indicator for each of the 18 channels)

Provide a switch to set the Red Fail fault timing. Ensure that when the switch is in the ON position the Red Fail fault timing value is set to 1350 +/- 150ms (2018 mode). Ensure that when the switch is in the OFF position the Red Fail fault timing value is set to 850 +/- 150ms (210 mode).

Provide a switch to set the Watchdog fault timing. Ensure that when the switch is in the ON position the Watchdog fault timing value is set to 1.0 +/- 0.1s (2018 mode). Ensure that when the switch is in the OFF position the Watchdog fault timing value is set to 1.5 +/- 0.1s (210 mode).

Provide a jumper or switch to set the AC line brown-out levels. Ensure that when the jumper is present or the switch is in the ON position the AC line dropout voltage threshold is 98 +/- 2 Vrms, the AC line restore voltage threshold is 103 +/- 2 Vrms, and the AC line brown-out timing value is set to 400 +/- 50ms (2018 mode). Ensure that when the jumper is not present or the switch is in the OFF position the AC line dropout voltage threshold is 92 +/- 2 Vrms, the AC line restore voltage threshold is 98 +/- 2 Vrms, and the AC line brown-out timing value is set to 80 +/- 17ms (210 mode).

Provide a jumper or switch that will enable and disable the Watchdog Latch function. Ensure that when the jumper is not present or the switch is in the OFF position the Watchdog Latch function is disabled. In this mode of operation, a Watchdog fault will be reset following a power loss, brownout, or power interruption. Ensure that when the jumper is present or the switch is in the ON position the Watchdog Latch function is enabled. In this mode of operation, a Watchdog fault will be retained until a Reset command is issued.

Provide a jumper that will reverse the active polarity for pin #EE (output relay common). Ensure that when the jumper is not present pin #EE (output relay common) will be considered 'Active' at a voltage greater than 70 Vrms and 'Not Active' at a voltage less than 50 Vrms (Caltrans mode). Ensure that when the jumper is present pin #EE (output relay common) will be considered 'Active' at a voltage less than 50 Vrms and 'Not Active' at a voltage greater than 70 Vrms (Failsafe mode).

In addition to the connectors required by CALTRANS' 2009 TEES, provide the conflict monitor with a red interface connector mounted on the front of the monitor. Ensure the connector is a 20 pin, right angle, male connector with latching clip locks and polarizing keys. Ensure the right angle solder tails are designed for a 0.062" thick printed circuit board. Keying of the connector shall be between pins 3 and 5, and between 17 and 19. Ensure the connector has two rows of pins with the odd numbered pins on one row and the even pins on the other row. Ensure the connector pin row spacing is 0.10" and pitch is 0.10". Ensure the mating length of the connector pins is 0.24". Ensure the pins are finished with gold plating 30μ" thick.

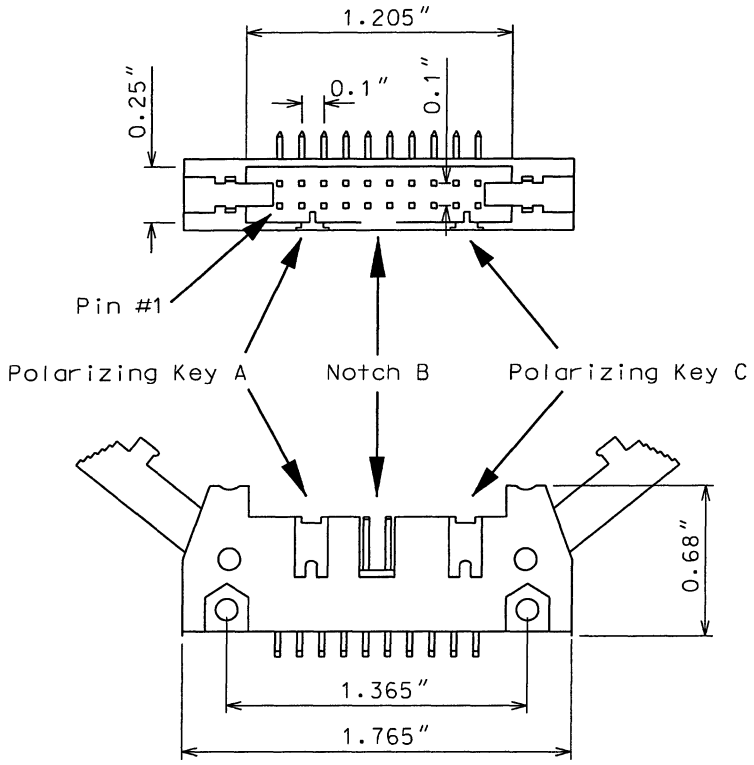

Ensure the red interface connector pins on the monitor have the following functions:

Pin #	Function	Pin #	Function
1	Channel 15 Red	2	Channel 16 Red
3	Channel 14 Red	4	Chassis Ground
5	Channel 13 Red	6	Special Function 2
7	Channel 12 Red	8	Special Function 1
9	Channel 10 Red	10	Channel 11 Red
11	Channel 9 Red	12	Channel 8 Red
13	Channel 7 Red	14	Channel 6 Red
15	Channel 5 Red	16	Channel 4 Red
17	Channel 3 Red	18	Channel 2 Red
19	Channel 1 Red	20	Red Enable

Ensure that the removal of the P-20 red interface ribbon cable will cause the monitor to recognize a latching fault condition and place the cabinet into flashing operation.

Provide Special Function 1 and Special Function 2 inputs to the unit which shall disable only Red Fail Monitoring when either input is sensed active. A Special Function input shall be sensed active when the input voltage exceeds 70 Vrms with a minimum duration of 550 ms. A Special Function input shall be sensed not active when the input voltage is less than 50 Vrms or the duration is less than 250 ms. A Special Function input is undefined by these specifications and may or may not be sensed active when the input voltage is between 50 Vrms and 70 Vrms or the duration is between 250 ms and 550 ms.

Ensure the conflict monitor recognizes field signal inputs for each channel that meet the following requirements:

- consider a Red input greater than 70 Vrms and with a duration of at least 500 ms as an "on" condition;
- consider a Red input less than 50 Vrms or with a duration of less than 200 ms as an "off" condition (no valid signal);
- consider a Red input between 50 Vrms and 70 Vrms or with a duration between 200 ms and 500 ms to be undefined by these specifications;
- consider a Green or Yellow input greater than 25 Vrms and with a duration of at least 500 ms as an "on" condition;
- consider a Green or Yellow input less than 15 Vrms or with a duration of less than 200 ms as an "off" condition; and
- consider a Green or Yellow input between 15 Vrms and 25 Vrms or with a duration between 200 ms and 500 ms to be undefined by these specifications.

Provide a conflict monitor that recognizes the faults specified by CALTRANS' 2009 TEES and the following additional faults. Ensure the conflict monitor will trigger upon detection of a fault and will remain in the triggered (in fault mode) state until the unit is reset at the front panel or through the external remote reset input for the following failures:

1. **Red Monitoring or Absence of Any Indication (Red Failure):** A condition in which no "on" voltage signal is detected on any of the green, yellow, or red inputs to a given monitor channel. If a signal is not detected on at least one input (R, Y, or G) of a conflict monitor channel for a period greater than 1000 ms when used with a 170 controller and 1500 ms when used with a 2070L controller, ensure monitor will trigger and put the intersection into flash. If the absence of any indication condition lasts less that 750 ms when used with a 170 controller and 1200 ms when used with a 2070L controller, ensure conflict monitor will not trigger. Red fail monitoring shall be enabled on a per channel basis by the use of switches located on the conflict monitor. Have red monitoring occur when all of the following input conditions are in effect:

   a) Red Enable input to monitor is active (Red Enable voltages are "on" at greater than 70 Vrms, off at less than 50 Vrms, undefined between 50 and 70 Vrms), and

   b) Neither Special Function 1 nor Special Function 2 inputs are active.

   c) Pin #EE (output relay common) is not active

2. **Short/Missing Yellow Indication Fault (Clearance Error):** Yellow indication following a green is missing or shorter than 2.7 seconds (with ± 0.1-second accuracy). If a channel fails to detect an "on" signal at the Yellow input for a minimum of 2.7 seconds (± 0.1 second) following the detection of an "on" signal at a Green input for that channel, ensure that the monitor triggers and generates a clearance/short yellow error fault indication. Short/missing yellow (clearance) monitoring shall be enabled on a per channel basis by the use of switches located on the conflict monitor. This fault shall not occur when the channel is programmed for Yellow Inhibit, when the Red Enable signal is inactive or pin #EE (output relay common) is active.
3. **Dual Indications on the Same Channel:** In this condition, more than one indication (R,Y,G) is detected as "on" at the same time on the same channel. If dual indications are detected for a period greater than 500 ms, ensure that the conflict monitor triggers and displays the proper failure indication (Dual Ind fault). If this condition is detected for less than 200 ms, ensure that the monitor does not trigger. G-Y-R dual indication monitoring shall be enabled on a per channel basis by the use of switches located on the conflict monitor.

G-Y dual indication monitoring shall be enabled for all channels by use of a switch located on the conflict monitor. This fault shall not occur when the Red Enable signal is inactive or pin #EE (output relay common) is active.

4. **Configuration Settings Change:** The configuration settings are comprised of (as a minimum) the permissive diode matrix, dual indication switches, yellow disable jumpers, any option switches, any option jumpers, and the Watchdog Enable switch. Ensure the conflict monitor compares the current configuration settings with the previous stored configuration settings on power-up, on reset, and periodically during operation. If any of the configuration settings are changed, ensure that the conflict monitor triggers and causes the program card indicator to flash. Ensure that configuration change faults are only reset by depressing and holding the front panel reset button for a minimum of three seconds. Ensure the external remote reset input does not reset configuration change faults.

Ensure the conflict monitor will trigger and the AC Power indicator will flash at a rate of 2 Hz ± 20% with a 50% duty cycle when the AC Line voltage falls below the "drop-out" level. Ensure the conflict monitor will resume normal operation when the AC Line voltage returns above the "restore" level. Ensure the AC Power indicator will remain illuminated when the AC voltage returns above the "restore" level. Should an AC Line power interruption occur while the monitor is in the fault mode, then upon restoration of AC Line power, the monitor will remain in the fault mode and the correct fault and channel indicators will be displayed.

Provide a flash interval of at least 6 seconds and at most 10 seconds in duration following a power-up, an AC Line interruption, or a brownout restore. Ensure the conflict monitor will suspend all fault monitoring functions, close the Output relay contacts, and flash the AC indicator at a rate of 4 Hz ± 20% with a 50% duty cycle during this interval. Ensure the termination of the flash interval after at least 6 seconds if the Watchdog input has made 5 transitions between the True and False state and the AC Line voltage is greater than the "restore" level. If the watchdog input has not made 5 transitions between the True and False state within 10 ± 0.5 seconds, the monitor shall enter a WDT error fault condition.

Ensure the conflict monitor will monitor an intersection with a minimum of four approaches using the four-section Flashing Yellow Arrow (FYA) vehicle traffic signal as outlined by the NCHRP 3-54 research project for protected-permissive left turn signal displays. Ensure the conflict monitor will operate in the FYA mode and FYAc (Compact) mode as specified below to monitor each channel for the following fault conditions: Conflict, Red Fail, Dual Indication, and Clearance. Provide a switch to select between the FYA mode and FYAc mode. Provide a switch to select each FYA phase movement for monitoring.

FYA mode

FYA Signal Head	Phase 1	Phase 3	Phase 5	Phase 7
Red Arrow	Channel 9 Red	Channel 10 Red	Channel 11 Red	Channel 12 Red
Yellow Arrow	Channel 9 Yellow	Channel 10 Yellow	Channel 11 Yellow	Channel 12 Yellow
Flashing Yellow Arrow	Channel 9 Green	Channel 10 Green	Channel 11 Green	Channel 12 Green
Green Arrow	Channel 1 Green	Channel 3 Green	Channel 5 Green	Channel 7 Green

FYAc mode

FYA Signal Head	Phase 1	Phase 3	Phase 5	Phase 7
Red Arrow	Channel 1 Red	Channel 3 Red	Channel 5 Red	Channel 7 Red
Yellow Arrow	Channel 1 Yellow	Channel 3 Yellow	Channel 5 Yellow	Channel 7 Yellow
Flashing Yellow Arrow	Channel 1 Green	Channel 3 Green	Channel 5 Green	Channel 7 Green
Green Arrow	Channel 9 Green	Channel 9 Yellow	Channel 10 Green	Channel 10 Yellow

Ensure that the conflict monitor will log at least nine of the most recent events detected by the monitor in non-volatile EEPROM memory (or equivalent). For each event, record at a minimum the time, date, type of event, status of each field signal indication with RMS voltage, and specific channels involved with the event. Ensure the conflict monitor will log the following events: monitor reset, configuration, previous fault, and AC line. Furnish the signal sequence log that shows all channel states (Greens, Yellows, and Reds) and the Red Enable State for a minimum of 2 seconds prior to the current fault trigger point. Ensure the display resolution of the inputs for the signal sequence log is not greater than 50 ms.

Provide a RS-232C/D compliant port (DB-9 female connector) on the front panel of the conflict monitor in order to provide communications from the conflict monitor to the 170/2070L controller or to a Department-furnished laptop computer. Electrically isolate the port interface electronics from all monitor electronics, excluding Chassis Ground. Ensure that the controller can receive all event log information through a controller Asynchronous Communications Interface Adapter (Type 170E) or Async Serial Comm Module (2070L). Provide a Windows based graphic user interface software to communicate directly through the same monitor RS-232C/D compliant port to retrieve and view all event log information to a Department-furnished laptop computer. The RS-232C/D compliant port on the monitor shall allow the monitor to function as a DCE device with pin connections as follows:

Conflict Monitor RS-232C/D (DB-9 Female) Pinout		
Pin Number	**Function**	**I/O**
1	DCD	O
2	TX Data	O
3	RX Data	I
4	DTR	I
5	Ground	-
6	DSR	O
7	CTS	I
8	RTS	O
9	NC	-

MONITOR BOARD EDGE CONNECTOR

Pin #	Function (Back Side)	Pin #	Function (Component Side)
1	Channel 2 Green	A	Channel 2 Yellow
2	Channel 13 Green	B	Channel 6 Green
3	Channel 6 Yellow	C	Channel 15 Green
4	Channel 4 Green	D	Channel 4 Yellow
5	Channel 14 Green	E	Channel 8 Green
6	Channel 8 Yellow	F	Channel 16 Green
7	Channel 5 Green	H	Channel 5 Yellow
8	Channel 13 Yellow	J	Channel 1 Green
9	Channel 1 Yellow	K	Channel 15 Yellow
10	Channel 7 Green	L	Channel 7 Yellow
11	Channel 14 Yellow	M	Channel 3 Green
12	Channel 3 Yellow	N	Channel 16 Yellow
13	Channel 9 Green	P	Channel 17 Yellow
14	Channel 17 Green	R	Channel 10 Green
15	Channel 11 Yellow	S	Channel 11 Green
16	Channel 9 Yellow	T	Channel 18 Yellow
17	Channel 18 Green	U	Channel 10 Yellow
--		--	
18	Channel 12 Yellow	V	Channel 12 Green
19	Channel 17 Red	W	Channel 18 Red
20	Chassis Ground	X	Not Assigned
21	AC-	Y	DC Common
22	Watchdog Timer	Z	External Test Reset
23	+24VDC	AA	+24VDC
24	Tied to Pin 25	BB	Stop Time (Output)
25	Tied to Pin 24	CC	Not Assigned
26	Not Assigned	DD	Not Assigned
27	Relay Output, Side #3, N.O.	EE	Relay Output,Side #2,Common
28	Relay Output, Side #1, N.C.	FF	AC+

-- Slotted for keying between Pins 17/U and 18/V

CONFLICT PROGRAM CARD PIN ASSIGNMENTS

Pin #	Function (Back Side)	Pin #	Function (Component Side)
1	Channel 2 Green	A	Channel 1 Green
2	Channel 3 Green	B	Channel 2 Green
3	Channel 4 Green	C	Channel 3 Green
4	Channel 5 Green	D	Channel 4 Green
5	Channel 6 Green	E	Channel 5 Green
6	Channel 7 Green	F	Channel 6 Green
7	Channel 8 Green	H	Channel 7 Green
8	Channel 9 Green	J	Channel 8 Green
9	Channel 10 Green	K	Channel 9 Green
10	Channel 11 Green	L	Channel 10 Green
11	Channel 12 Green	M	Channel 11 Green
12	Channel 13 Green	N	Channel 12 Green
13	Channel 14 Green	P	Channel 13 Green
14	Channel 15 Green	R	Channel 14 Green
15	Channel 16 Green	S	Channel 15 Green
16	N/C	T	PC AJAR
17	Channel 1 Yellow	U	Channel 9 Yellow
18	Channel 2 Yellow	V	Channel 10 Yellow
19	Channel 3 Yellow	W	Channel 11 Yellow
20	Channel 4 Yellow	X	Channel 12 Yellow
21	Channel 5 Yellow	Y	Channel 13 Yellow
22	Channel 6 Yellow	Z	Channel 14 Yellow
23	Channel 7 Yellow	AA	Channel 15 Yellow
24	Channel 8 Yellow	BB	Channel 16 Yellow
--		--	
25	Channel 17 Green	CC	Channel 17 Yellow
26	Channel 18 Green	DD	Channel 18 Yellow
27	Channel 16 Green	EE	PC AJAR (Program Card)
28	Yellow Inhibit Common	FF	Channel 17 Green

-- Slotted for keying between Pins 24/BB and 25/CC

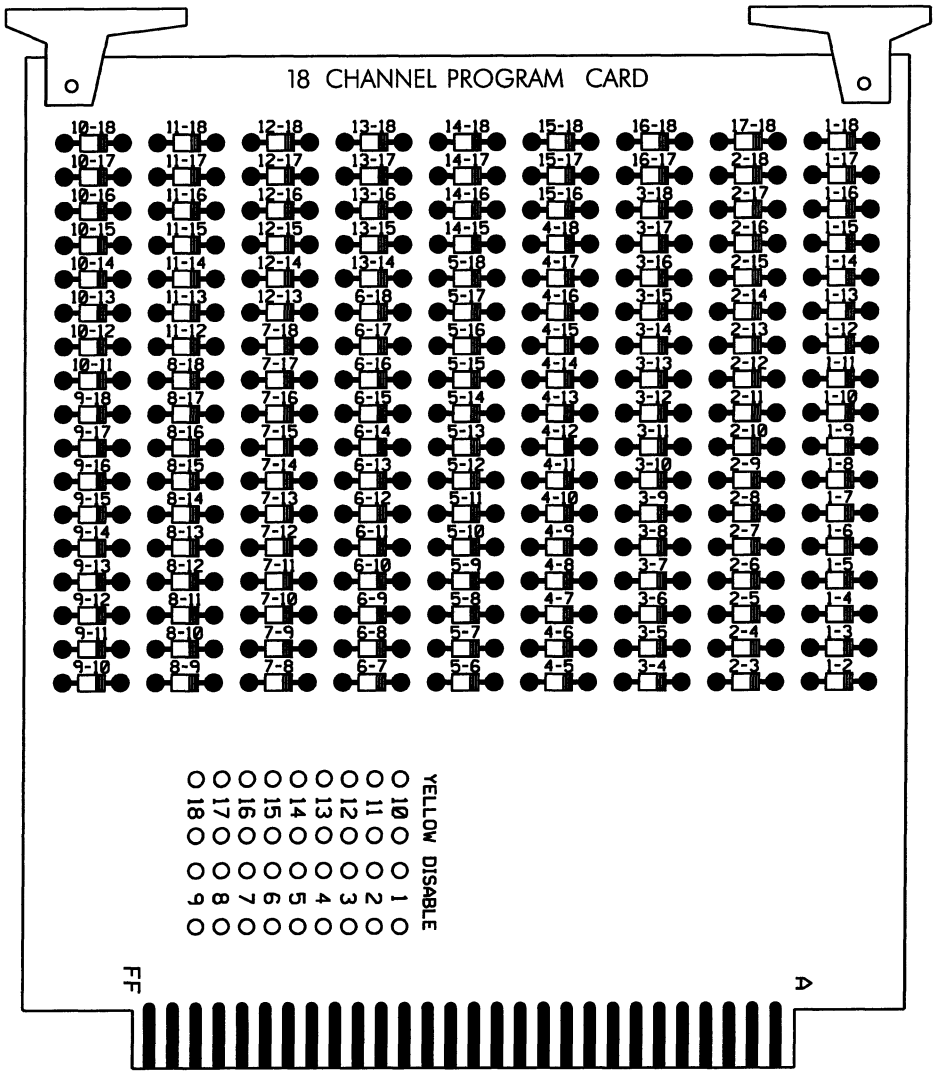

2.4. MATERIALS – TYPE 170 DETECTOR SENSOR UNITS

Furnish detector sensor units that comply with Chapter 5 Section 1, "General Requirements," and Chapter 5 Section 2, "Model 222 & 224 Loop Detector Sensor Unit Requirements," of the CALTRANS "Transportation Electrical Equipment Specifications" dated March 12, 2009 with Erratum 1.

3. PUSH BUTTON INTEGRATED ACCESSIBLE PEDESTRIAN SIGNAL (APS)

3.1. DESCRIPTION

Furnish and install push button integrated accessible pedestrian signals that include pedestrian push button, push button locator tone, raised tactile arrow, audio and vibro-tactile walk indications, automatic volume adjustment, pedestrian information sign, and all necessary hardware. Furnish the R10-3e with appropriate arrow direction for the pedestrian information sign.

3.2. MATERIALS

Provide the accessible pedestrian signals with a 2-inch diameter pedestrian push button that contains a tactile arrow whose direction can be easily adjusted in the field. Ensure each push button

actuates a sturdy, momentary, normally-open switch with a minimum rating of 20 million actuations. Include on the button, a raised tactile arrow having a high visual contrast with the remainder of the button face. Ensure the housing is weather-tight and fabricated from aluminum. Ensure the housing is suitable for mounting on wood and metal poles. Paint surfaces of the pedestrian push button housing in highway yellow, unless otherwise specified, with an electrostatically-applied, fused-polyester paint method. Ensure the thickness of the paint is a minimum of 2.5 mils. Provide the pedestrian information sign that is integral to the housing.

Ensure the accessible pedestrian signals can provide tones, sounds, and speech messages that are synchronized at an intersection. Provide a means for adjusting the base sound level for the tones, sounds, and speech messages. Ensure the tones, sounds, and speech messages will adjust automatically to the ambient noise level up to a maximum of 100 dBA. Provide the custom speech messages in both English and Spanish languages. Ensure you can program the accessible pedestrian signal by a means not readily accessible by unauthorized persons.

Ensure each push button provides a standard locator tone that is deactivated when the traffic signal is operating in the flash mode. Provide a user-programmable audible beaconing feature that is initiated by an extended push button press of one second or more. Ensure the audible beaconing feature increases the volume of the push button locator tone during the pedestrian change interval of the called pedestrian phase and operates in one of the following ways:

A. The louder audible walk indication and louder locator tone comes from the far end of the crosswalk, as pedestrians cross the street,

B. The louder locator tone comes from both ends of the crosswalk, or

C. The louder locator tone comes from an additional speaker that is aimed at the center of the crosswalk and that is mounted on a pedestrian signal head.

Provide confirmation of the push button activation by an LED pilot light. Ensure the pilot light remains illuminated until the pedestrian's green or WALKING PERSON (symbolizing WALK) signal indication is displayed. Ensure each press of the pushbutton initiates a "wait" speech message during all intervals except the Walk interval.

Ensure you can select a percussive tone and custom speech message to sound during the "Walk" interval. Provide a push button that vibrates during the "Walk" interval. Ensure the "Walk" indications have the same duration as the illuminated pedestrian signals except when the signal is programmed to rest in the walk interval. Ensure the "Walk" indications are deactivated when the traffic control signal is operating in a flashing mode. When audible "Walk" indications are selected as a percussive tone, ensure the tone repeats at 8 to 10 ticks per second and consists of multiple frequencies with a dominant component at 880 Hz.

Ensure the accessible pedestrian signals are weatherproof and suitable for operation in wet locations. Ensure proper operation over a temperature range of -30°F (-34°C) to 165°F (+74°C). Ensure all circuit boards have a moisture resistant coating. Ensure the equipment interfaces and operates properly in a Type-170E cabinet.

3.3. CONSTRUCTION METHODS

Comply with the requirements of Section 1705 of the *Standard Specifications*. Install in accordance with the manufacturer's recommendations.

Mount push button integrated accessible pedestrian signals in a tamperproof manner on wood and metal poles, signal pedestals, or pushbutton posts as indicated in the signal plans.

Install each pushbutton so that the tactile arrow is pointed in the direction of travel and is aligned parallel to the direction of travel on the associated crosswalk.

Ensure pushbuttons are separated by a distance of at least 10 feet such that they clearly indicate which crosswalk has the WALK indication. Where there are constraints on a particular corner that make it impractical to provide the 10 feet of separation between the two pushbuttons, the pushbuttons may be placed closer together or on the same pole, with approval by the Engineer. If two pushbuttons are placed on the same pole or with less than 10 feet separation, provide a speech walk message for the WALK indication and a speech pushbutton information message.

Adjust the intensity of the pushbutton locator tones so they are audible 6 feet to 12 feet from the pushbutton, or to the building line, whichever is less. Ensure the pushbutton locator tones are no more than 5 dBA louder than ambient sound. Configure audible "Walk" indication to be audible at the nearest end of the associated crosswalk.

If speech messages are used, have each recorded custom speech message approved by the Engineer in advance.

3.4. MEASUREMENT AND PAYMENT

Actual number of push button integrated accessible pedestrian signal detector stations furnished, installed, and accepted.

Actual number of central control units for APS detector stations furnished, installed, and accepted.

No measurement will be made of cables or hardware, as these will be considered incidental to furnishing and installing push button integrated accessible pedestrian signals.

APS Detector Stations.....Each
Central Control Units For APS Detector Stations.....Each

PROJECT SPECIAL PROVISION

(10-18-95) Z-1

PERMITS

The Contractor's attention is directed to the following permits, which have been issued to the Department of Transportation by the authority granting the permit.

PERMIT	AUTHORITY GRANTING THE PERMIT
Dredge and Fill and/or Work in Navigable Waters (404)	U. S. Army Corps of Engineers
Water Quality (401)	Division of Environmental Management, DENR State of North Carolina

The Contractor shall comply with all applicable permit conditions during construction of this project. Those conditions marked by * are the responsibility of the department and the Contractor has no responsibility in accomplishing those conditions.

Agents of the permitting authority will periodically inspect the project for adherence to the permits.

The Contractor's attention is also directed to Articles 107-10 and 107-13 of the *2012 Standard Specifications* and the following:

Should the Contractor propose to utilize construction methods (such as temporary structures or fill in waters and/or wetlands for haul roads, work platforms, cofferdams, etc.) not specifically identified in the permit (individual, general, or nationwide) authorizing the project it shall be the Contractor's responsibility to coordinate with the Engineer to determine what, if any, additional permit action is required. The Contractor shall also be responsible for initiating the request for the authorization of such construction method by the permitting agency. The request shall be submitted through the Engineer. The Contractor shall not utilize the construction method until it is approved by the permitting agency. The request normally takes approximately 60 days to process; however, no extensions of time or additional compensation will be granted for delays resulting from the Contractor's request for approval of construction methods not specifically identified in the permit.

Where construction moratoriums are contained in a permit condition which restricts the Contractor's activities to certain times of the year, those moratoriums will apply only to the portions of the work taking place in the waters or wetlands provided that activities outside those areas is done in such a manner as to not affect the waters or wetlands.

U.S. ARMY CORPS OF ENGINEERS
WILMINGTON DISTRICT

Action ID. **SAW-2008-02840** County: **Orange** USGS Quad: **Chapel Hill**

GENERAL PERMIT (REGIONAL AND NATIONWIDE) VERIFICATION

Property Owner / Authorized Agent: **North Carolina Department of Transportation; Attn: Gregory Thorpe**
Address: **Project Development and Environmental Analysis Branch**
1598 Mail Service Center
Raleigh, North Carolina 27699-1598

Telephone No.: **919-733-3141**
Size and location of property (water body, road name/number, town, etc.): **<0.1 acre; the project is located immediately southeast of the South Columbia Street, Chase Avenue intersection, in Orange County, North Carolina and is identified as *U-0624*.**

Description of projects area and activity: **This authorization is for the temporary discharge of clean fill material within 10 linear feet of a jurisdictional stream with important aquatic function for temporary construction access. The project must be conducted in accordance with the application and drawings submitted on September 18, 2008 and the additional information provided via electronic mail on October 06, 2008. This permit verification supersedes the U.S. Army Corps of Engineers Action ID SAW-2008-02840 issued on November 17, 2008 .**

Applicable Law: ☒ Section 404 (Clean Water Act, 33 USC 1344)
☐ Section 10 (Rivers and Harbors Act, 33 USC 403)
Authorization: Regional General Permit Number: ____
Nationwide Permit Number: **33**

Your work is authorized by the above referenced permit provided it is accomplished in strict accordance with the attached conditions and your submitted plans. Any violation of the attached conditions or deviation from your submitted plans may subject the permittee to a stop work order, a restoration order and/or appropriate legal action.

This verification is valid until the NWP is modified, reissued, or revoked. All of the existing NWPs are scheduled to be modified, reissued, or revoked prior to March 18, 2012. It is incumbent upon you to remain informed of changes to the NWPs. We will issue a public notice when the NWPs are reissued. Furthermore, if you commence or are under contract to commence this activity before the date that the relevant nationwide permit is modified or revoked, you will have twelve (12) months from the date of the modification or revocation of the NWP to complete the activity under the present terms and conditions of this nationwide permit.

Activities subject to Section 404 (as indicated above) may also require an individual Section 401 Water Quality Certification. You should contact the NC Division of Water Quality (telephone (919) 733-1786) to determine Section 401 requirements.

For activities occurring within the twenty coastal counties subject to regulation under the Coastal Area Management Act (CAMA), prior to beginning work you must contact the N.C. Division of Coastal Management .

This Department of the Army verification does not relieve the permittee of the responsibility to obtain any other required Federal, State or local approvals/permits.

If there are any questions regarding this verification, any of the conditions of the Permit, or the Corps of Engineers regulatory program, please contact Andrew Williams at telephone number 919-554-4884 extension 26.

Corps Regulatory Official Andrew Williams Date: **November 17, 2010**

Expiration Date of Verification: **March 18, 2012**

The Wilmington District is committed to providing the highest level of support to the public. To help us ensure we continue to do so, please complete the Customer Satisfaction Survey located at our website at http://regulatory.usacesurvey.com/ to complete the survey online.

Price

RECEIVED
NOV 18 2010
DIVISION OF HIGHWAYS
PDEA-OFFICE OF NATURAL ENVIRONMENT

Determination of Jurisdiction:

☐ Based on preliminary information, there appear to be waters of the US including wetlands within the above described project area. This preliminary determination is not an appealable action under the Regulatory Program Administrative Appeal Process (Reference 33 CFR Part 331).

☐ There are Navigable Waters of the United States within the above described project area subject to the permit requirements of Section 10 of the Rivers and Harbors Act and Section 404 of the Clean Water Act. Unless there is a change in the law or our published regulations, this determination may be relied upon for a period not to exceed five years from the date of this notification.

☐ There are waters of the US and/or wetlands within the above described project area subject to the permit requirements of Section 404 of the Clean Water Act (CWA)(33 USC § 1344). Unless there is a change in the law or our published regulations, this determination may be relied upon for a period not to exceed five years from the date of this notification.

☒ The jurisdictional areas within the above described project area have been identified under a previous action. Please reference jurisdictional determination issued **November 17, 2008**. Action ID **SAW-2008-02840**

Basis of Jurisdictional Determination: **The stream is a relatively permanent water (RPW) and an unnamed tributary to an unnamed tributary (RPW), of Wilson Creek, an RPW. Wilson Creek is a tributary to Morgan Creek, an RPW, which is a tributary to Jordan Lake, an impoundment of several RPWs. Jordan Lake flows to the Haw River, a traditionally navigable water (TNW). The Haw River is a tributary to the Cape Fear River, a navigable water of the United States. The Ordinary High Water Mark (OHWM) of the unnamed tributary was indicated by the following physical characteristics: clear natural line impressed on the bank, shelving, and the destruction of terrestrial vegetation.**

This jurisdictional determination is only for the waters proposed for impacts associated with this Nationwide Permit verification and does not include any other waters/wetlands that may be located on the property or within the project area.

Appeals Information (This information applies only to approved jurisdictional determinations.)

Attached to this verification is an approved jurisdictional determination. If you are not in agreement with that approved jurisdictional determination, you can make an administrative appeal under 33 CFR 331. Enclosed you will find a Notification of Appeal Process (NAP) fact sheet and request for appeal (RFA) form. If you request to appeal this determination you must submit a completed RFA form to the following address:

District Engineer, Wilmington Regulatory Division
Attn: Andrew Williams, Project Manager,
Raleigh Regulatory Field Office
U.S. Army Corps of Engineers
3331 Heritage Trade Drive, Suite 105
Wake Forest, North Carolina 27587

In order for an RFA to be accepted by the Corps, the Corps must determine that it is complete, that it meets the criteria for appeal under 33 CFR part 331.5, and that it has been received by the District Office within 60 days of the date of the NAP. Should you decide to submit an RFA form, it must be received at the above address by **NA**.

It is not necessary to submit an RFA form to the District Office if you do not object to the determination in this correspondence.

Corps Regulatory Official: Andrew Williams

Date **November 17, 2008** Expiration Date **November 17, 2013**

Summary of Authorized Impacts and Required Mitigation

Action ID #	NWP / GP #	Open Water (ac)		Wetland (ac)		Unimportant Steam (lf)		Important Stream (lf)	
		Temporary	Permanent	Temporary	Permanent	Temporary	Permanent	Temporary	Permanent
SAW-2008-02840	NWP 33							10	
Impact Totals		0	0	0	0	0	0	10	0
Total Loss of Waters of the U.S. (ac)				0		Total Loss of Waters of the U.S. (lf)			0
Required Wetland Mitigation (ac)		0				Required Stream Mitigation (lf)		0	

Special Permit Conditions: **None**

SURVEY PLATS, FIELD SKETCH, WETLAND DELINEATION FORMS, PROJECT PLANS, ETC., MUST BE ATTACHED TO THE FILE COPY OF THIS FORM, IF REQUIRED OR AVAILABLE.

Copy Furnished:
Sue Homewood
North Carolina Department of Natural Resources
Division of Water Quality
585 Waughtown Street
Winston-Salem, NC 27107

Greg Price
North Carolina Department of Transportation
Project Development and Environmental Analysis
Natural Environment Unit
1598 Mail Service Center
Raleigh, North Carolina 27699-1598

Action ID Number:SAW-2008-02840 County:Orange

Permittee: North Carolina Department of Transportation; Attn: Gregory Thorpe

Date Verification Issued: November 17, 2010

Project Manager: Andrew Williams

Upon completion of the activity authorized by this permit and any mitigation required by the permit, sign this certification and return it to the following address:

US ARMY CORPS OF ENGINEERS
WILMINGTON DISTRICT
RALEIGH REGULATORY FIELD OFFICE
3331 HERITAGE TRADE DRIVE, SUITE 105
WAKE FOREST, NORTH CAROLINA 27587

Please note that your permitted activity is subject to a compliance inspection by a U. S. Army Corps of Engineers representative. If you fail to comply with this permit you are subject to permit suspension, modification, or revocation.

I hereby certify that the work authorized by the above referenced permit has been completed in accordance with the terms and condition of the said permit, and required mitigation was completed in accordance with the permit conditions.

_____ _____

Signature of Permittee Date

NATIONWIDE PERMIT 33
DEPARTMENT OF THE ARMY
CORPS OF ENGINEERS
FINAL NOTICE OF ISSUANCE AND MODIFICATION OF NATIONWIDE PERMITS
FEDERAL REGISTER
AUTHORIZED MARCH 19, 2007

Temporary Construction, Access, and Dewatering. Temporary structures, work, and discharges, including cofferdams, necessary for construction activities or access fills or dewatering of construction sites, provided that the associated primary activity is authorized by the Corps of Engineers or the U.S. Coast Guard. This NWP also authorizes temporary structures, work, and discharges, including cofferdams, necessary for construction activities not otherwise subject to the Corps or U.S. Coast Guard permit requirements. Appropriate measures must be taken to maintain near normal downstream flows and to minimize flooding. Fill must consist of materials, and be placed in a manner, that will not be eroded by expected high flows. The use of dredged material may be allowed if the district engineer determines that it will not cause more than minimal adverse effects on aquatic resources. Following completion of construction, temporary fill must be entirely removed to upland areas, dredged material must be returned to its original location, and the affected areas must be restored to pre-construction elevations. The affected areas must also be revegetated, as appropriate. This permit does not authorize the use of cofferdams to dewater wetlands or other aquatic areas to change their use. Structures left in place after construction is completed require a section 10 permit if located in navigable waters of the United States. (See 33 CFR part 322.)

* Notification: The permittee must submit a pre-construction notification to the district engineer prior to commencing the activity (see general condition 27). The pre-construction notification must include a restoration plan showing how all temporary fills and structures will be removed and the area restored to pre-project conditions. (Sections 10 and 404)

NATIONWIDE PERMIT CONDITIONS

The following General Conditions must be followed in order for any authorization by a NWP to be valid:

1. Navigation. (a) No activity may cause more than a minimal adverse effect on navigation.

(b) Any safety lights and signals prescribed by the U.S. Coast Guard, through regulations or otherwise, must be installed and maintained at the permittee's expense on authorized facilities in navigable waters of the United States.

(c) The permittee understands and agrees that, if future operations by the United States require the removal, relocation, or other alteration, of the structure or work herein authorized, or if, in the opinion of the Secretary of the Army or his authorized representative, said structure or work shall cause unreasonable obstruction to the free navigation of the navigable waters, the permittee will be required, upon due notice from the Corps of Engineers, to remove, relocate, or alter the structural work or obstructions caused thereby, without expense to the United States. No claim shall be made against the United States on account of any such removal or alteration.

2. Aquatic Life Movements. No activity may substantially disrupt the necessary life cycle movements of those species of aquatic life indigenous to the waterbody, including those species that normally migrate through the area, unless the activity's primary purpose is to impound water. Culverts placed in streams must be installed to maintain low flow conditions.

3. Spawning Areas. Activities in spawning areas during spawning seasons must be avoided to the maximum extent practicable. Activities that result in the physical destruction (e.g., through excavation, fill, or downstream smothering by substantial turbidity) of an important spawning area are not authorized.

4. Migratory Bird Breeding Areas. Activities in waters of the United States that serve as breeding areas for migratory birds must be avoided to the maximum extent practicable.

5. Shellfish Beds. No activity may occur in areas of concentrated shellfish populations, unless the activity is directly related to a shellfish harvesting activity authorized by NWPs 4 and 48.

6. Suitable Material. No activity may use unsuitable material (e.g., trash, debris, car bodies, asphalt, etc.). Material used for construction or discharged must be free from toxic pollutants in toxic amounts (see Section 307 of the Clean Water Act).

7. Water Supply Intakes. No activity may occur in the proximity of a public water supply intake, except where the activity is for the repair or improvement of public water supply intake structures or adjacent bank stabilization.

8. Adverse Effects From Impoundments. If the activity creates an impoundment of water, adverse effects to the aquatic system due to accelerating the passage of water, and/or restricting its flow must be minimized to the maximum extent practicable.

9. Management of Water Flows. To the maximum extent practicable, the pre-construction course, condition, capacity, and location of open waters must be maintained for each activity, including stream channelization and storm water management activities, except as provided below. The activity must be constructed to withstand expected high flows. The activity must not restrict or impede the passage of normal or high flows, unless the primary purpose of the activity is to impound water or manage high flows. The activity may alter the pre-construction course, condition, capacity, and location of open waters if it benefits the aquatic environment (e.g., stream restoration or relocation activities).

10. Fills Within 100-Year Floodplains. The activity must comply with applicable FEMA-approved state or local floodplain management requirements.

11. Equipment. Heavy equipment working in wetlands or mudflats must be placed on mats, or other measures must be taken to minimize soil disturbance.

12. Soil Erosion and Sediment Controls. Appropriate soil erosion and sediment controls must be used and maintained in effective operating condition during construction, and all exposed soil and other fills, as well as any work below the ordinary high water mark or high tide line, must be permanently stabilized at the earliest practicable date. Permittees are encouraged to perform work within waters of the United States during periods of low-flow or no-flow.

13. Removal of Temporary Fills. Temporary fills must be removed in their entirety and the affected areas returned to pre-construction elevations. The affected areas must be revegetated, as appropriate.

14. Proper Maintenance. Any authorized structure or fill shall be properly maintained, including maintenance to ensure public safety.

15. Wild and Scenic Rivers. No activity may occur in a component of the National Wild and Scenic River System, or in a river officially designated by Congress as a "study river" for possible inclusion in the system while the river is in an official study status, unless the appropriate Federal agency with direct management responsibility for such river, has determined in writing that the proposed activity will not adversely affect the Wild and Scenic River designation or study status. Information on Wild and Scenic Rivers may be obtained from the appropriate Federal land management agency in the area (e.g., National Park Service, U.S. Forest Service, Bureau of Land Management, U.S. Fish and Wildlife Service).

16. Tribal Rights. No activity or its operation may impair reserved tribal rights, including, but not limited to, reserved water rights and treaty fishing and hunting rights.

17. Endangered Species. (a) No activity is authorized under any NWP which is likely to jeopardize the continued existence of a threatened or endangered species or a species proposed for such designation, as identified under the Federal Endangered Species Act (ESA), or which will destroy or adversely modify the critical habitat of such species. No activity is authorized under any NWP which "may affect" a listed species or critical habitat, unless Section 7 consultation addressing the effects of the proposed activity has been completed.

(b) Federal agencies should follow their own procedures for complying with the requirements of the ESA. Federal permittees must provide the district engineer with the appropriate documentation to demonstrate compliance with those requirements.

* (c) Non-federal permittees shall notify the district engineer if any listed species or designated critical habitat might be affected or is in the vicinity of the project, or if the project is located in designated critical habitat, and shall not begin work on the activity until notified by the district engineer that the requirements of the ESA have been satisfied and that the activity is authorized. For activities that might affect Federally-listed endangered or threatened species or designated critical habitat, the pre-construction notification must include the name(s) of the endangered or threatened species that may be affected by the proposed work or that utilize the designated critical habitat that may be affected by the proposed work. The district engineer will determine whether the proposed activity "may affect" or will have "no effect" to listed species and designated critical habitat and will notify the non-Federal applicant of the Corps' determination within 45 days of receipt of a complete pre-construction notification. In cases where the non-Federal applicant has identified listed species or critical habitat that might be affected or is in the vicinity of the project, and has so notified the Corps, the applicant shall not begin work until the Corps has provided notification the proposed activities will have "no effect" on listed species or critical habitat, or until Section 7 consultation has been completed.

(d) As a result of formal or informal consultation with the FWS or NMFS the district engineer may add species-specific regional endangered species conditions to the NWPs.

(e) Authorization of an activity by a NWP does not authorize the "take" of a threatened or endangered species as defined under the ESA. In the absence of separate authorization (e.g., an ESA Section 10 Permit, a Biological Opinion with "incidental take" provisions, etc.) from the U.S. FWS or the

NMFS, both lethal and non-lethal "takes" of protected species are in violation of the ESA. Information on the location of threatened and endangered species and their critical habitat can be obtained directly from the offices of the U.S. FWS and NMFS or their world wide Web pages at http://www.fws.gov/ and http://www.noaa.gov/fisheries.html respectively.

18. Historic Properties. (a) In cases where the district engineer determines that the activity may affect properties listed, or eligible for listing, in the National Register of Historic Places, the activity is not authorized, until the requirements of Section 106 of the National Historic Preservation Act (NHPA) have been satisfied.

(b) Federal permittees should follow their own procedures for complying with the requirements of Section 106 of the National Historic Preservation Act. Federal permittees must provide the district engineer with the appropriate documentation to demonstrate compliance with those requirements.

* (c) Non-federal permittees must submit a pre-construction notification to the district engineer if the authorized activity may have the potential to cause effects to any historic properties listed, determined to be eligible for listing on, or potentially eligible for listing on the National Register of Historic Places, including previously unidentified properties. For such activities, the pre-construction notification must state which historic properties may be affected by the proposed work or include a vicinity map indicating the location of the historic properties or the potential for the presence of historic properties. Assistance regarding information on the location of or potential for the presence of historic resources can be sought from the State Historic Preservation Officer or Tribal Historic Preservation Officer, as appropriate, and the National Register of Historic Places (see 33 CFR 330.4(g)). The district engineer shall make a reasonable and good faith effort to carry out appropriate identification efforts, which may include background research, consultation, oral history interviews, sample field investigation, and field survey. Based on the information submitted and these efforts, the district engineer shall determine whether the proposed activity has the potential to cause an effect on the historic properties. Where the non-Federal applicant has identified historic properties which the activity may have the potential to cause effects and so notified the Corps, the non-Federal applicant shall not begin the activity until notified by the district engineer either that the activity has no potential to cause effects or that consultation under Section 106 of the NHPA has been completed.

(d) The district engineer will notify the prospective permittee within 45 days of receipt of a complete pre-construction notification whether NHPA Section 106 consultation is required. Section 106 consultation is not required when the Corps determines that the activity does not have the potential to cause effects on historic properties (see 36 CFR 800.3(a)). If NHPA section 106 consultation is required and will occur, the district engineer will notify the non-Federal applicant that he or she cannot begin work until Section 106 consultation is completed.

(e) Prospective permittees should be aware that section 110k of the NHPA (16 U.S.C. 470h-2(k)) prevents the Corps from granting a permit or other assistance to an applicant who, with intent to avoid the requirements of Section 106 of the NHPA, has intentionally significantly adversely affected a historic property to which the permit would relate, or having legal power to prevent it, allowed such significant adverse effect to occur, unless the Corps, after consultation with the Advisory Council on Historic Preservation (ACHP), determines that circumstances justify granting such assistance despite the adverse effect created or permitted by the applicant. If circumstances justify granting the assistance, the Corps is required to notify the ACHP and provide documentation specifying the circumstances, explaining the degree of damage to the integrity of any historic properties affected, and proposed mitigation. This documentation must include any views obtained from the applicant, SHPO/THPO, appropriate Indian tribes if the undertaking occurs on or affects historic properties on tribal lands or affects properties of interest to those tribes, and other parties known to have a legitimate interest in the impacts to the permitted activity on historic properties.

19. Designated Critical Resource Waters. Critical resource waters include, NOAA-designated marine sanctuaries, National Estuarine Research Reserves, state natural heritage sites, and outstanding

national resource waters or other waters officially designated by a state as having particular environmental or ecological significance and identified by the district engineer after notice and opportunity for public comment. The district engineer may also designate additional critical resource waters after notice and opportunity for comment.

(a) Discharges of dredged or fill material into waters of the United States are not authorized by NWPs 7, 12, 14, 16, 17, 21, 29, 31, 35, 39, 40, 42, 43, 44, 49, and 50 for any activity within, or directly affecting, critical resource waters, including wetlands adjacent to such waters.

(b) For NWPs 3, 8, 10, 13, 15, 18, 19, 22, 23, 25, 27, 28, 30, 33, 34, 36, 37, and 38, notification is required in accordance with general condition 27, for any activity proposed in the designated critical resource waters including wetlands adjacent to those waters. The district engineer may authorize activities under these NWPs only after it is determined that the impacts to the critical resource waters will be no more than minimal.

20. Mitigation. The district engineer will consider the following factors when determining appropriate and practicable mitigation necessary to ensure that adverse effects on the aquatic environment are minimal:

(a) The activity must be designed and constructed to avoid and minimize adverse effects, both temporary and permanent, to waters of the United States to the maximum extent practicable at the project site (i.e., on site).

(b) Mitigation in all its forms (avoiding, minimizing, rectifying, reducing, or compensating) will be required to the extent necessary to ensure that the adverse effects to the aquatic environment are minimal.

(c) Compensatory mitigation at a minimum one-for-one ratio will be required for all wetland losses that exceed 1/10 acre and require pre-construction notification, unless the district engineer determines in writing that some other form of mitigation would be more environmentally appropriate and provides a project-specific waiver of this requirement. For wetland losses of 1/10 acre or less that require pre-construction notification, the district engineer may determine on a case-by-case basis that compensatory mitigation is required to ensure that the activity results in minimal adverse effects on the aquatic environment. Since the likelihood of success is greater and the impacts to potentially valuable uplands are reduced, wetland restoration should be the first compensatory mitigation option considered.

(d) For losses of streams or other open waters that require pre-construction notification, the district engineer may require compensatory mitigation, such as stream restoration, to ensure that the activity results in minimal adverse effects on the aquatic environment.

(e) Compensatory mitigation will not be used to increase the acreage losses allowed by the acreage limits of the NWPs. For example, if an NWP has an acreage limit of 1/2 acre, it cannot be used to authorize any project resulting in the loss of greater than 1/2 acre of waters of the United States, even if compensatory mitigation is provided that replaces or restores some of the lost waters. However, compensatory mitigation can and should be used, as necessary, to ensure that a project already meeting the established acreage limits also satisfies the minimal impact requirement associated with the NWPs.

(f) Compensatory mitigation plans for projects in or near streams or other open waters will normally include a requirement for the establishment, maintenance, and legal protection (e.g., conservation easements) of riparian areas next to open waters. In some cases, riparian areas may be the only compensatory mitigation required. Riparian areas should consist of native species. The width of the required riparian area will address documented water quality or aquatic habitat loss concerns. Normally, the riparian area will be 25 to 50 feet wide on each side of the stream, but the district engineer may require slightly wider riparian areas to address documented water quality or habitat loss concerns. Where both wetlands and open waters exist on the project site, the district engineer will determine the appropriate compensatory mitigation (e.g., riparian areas and/or wetlands compensation) based on what is best for the aquatic environment on a watershed basis. In cases where riparian areas are determined to be the most appropriate form of compensatory mitigation, the district engineer may waive or reduce the requirement to provide wetland compensatory mitigation for wetland losses.

(g) Permittees may propose the use of mitigation banks, in-lieu fee arrangements or separate activity-specific compensatory mitigation. In all cases, the mitigation provisions will specify the party responsible for accomplishing and/or complying with the mitigation plan.

(h) Where certain functions and services of waters of the United States are permanently adversely affected, such as the conversion of a forested or scrub-shrub wetland to a herbaceous wetland in a permanently maintained utility line right-of-way, mitigation may be required to reduce the adverse effects of the project to the minimal level.

21. Water Quality. Where States and authorized Tribes, or EPA where applicable, have not previously certified compliance of an NWP with CWA Section 401, individual 401 Water Quality Certification must be obtained or waived (see 33 CFR 330.4(c)). The district engineer or State or Tribe may require additional water quality management measures to ensure that the authorized activity does not result in more than minimal degradation of water quality.

22. Coastal Zone Management. In coastal states where an NWP has not previously received a state coastal zone management consistency concurrence, an individual state coastal zone management consistency concurrence must be obtained, or a presumption of concurrence must occur (see 33 CFR 330.4(d)). The district engineer or a State may require additional measures to ensure that the authorized activity is consistent with state coastal zone management requirements.

23. Regional and Case-By-Case Conditions. The activity must comply with any regional conditions that may have been added by the Division Engineer (see 33 CFR 330.4(e)) and with any case specific conditions added by the Corps or by the state, Indian Tribe, or U.S. EPA in its section 401 Water Quality Certification, or by the state in its Coastal Zone Management Act consistency determination.

24. Use of Multiple Nationwide Permits. The use of more than one NWP for a single and complete project is prohibited, except when the acreage loss of waters of the United States authorized by the NWPs does not exceed the acreage limit of the NWP with the highest specified acreage limit. For example, if a road crossing over tidal waters is constructed under NWP 14, with associated bank stabilization authorized by NWP 13, the maximum acreage loss of waters of the United States for the total project cannot exceed 1/3-acre.

25. Transfer of Nationwide Permit Verifications. If the permittee sells the property associated with a nationwide permit verification, the permittee may transfer the nationwide permit verification to the new owner by submitting a letter to the appropriate Corps district office to validate the transfer. A copy of the nationwide permit verification must be attached to the letter, and the letter must contain the following statement and signature:

"When the structures or work authorized by this nationwide permit are still in existence at the time the property is transferred, the terms and conditions of this nationwide permit, including any special conditions, will continue to be binding on the new owner(s) of the property. To validate the transfer of this nationwide permit and the associated liabilities associated with compliance with its terms and conditions, have the transferee sign and date below."

_____

(Transferee)

_____

(Date)

* 26. Compliance Certification. Each permittee who received an NWP verification from the Corps must submit a signed certification regarding the completed work and any required mitigation. The certification form must be forwarded by the Corps with the NWP verification letter and will include:

(a) A statement that the authorized work was done in accordance with the NWP authorization, including any general or specific conditions;

(b) A statement that any required mitigation was completed in accordance with the permit conditions; and

(c) The signature of the permittee certifying the completion of the work and mitigation.

* 27. Pre-Construction Notification. (a) Timing. Where required by the terms of the NWP, the prospective permittee must notify the district engineer by submitting a pre-construction notification (PCN) as early as possible. The district engineer must determine if the PCN is complete within 30 calendar days of the date of receipt and, as a general rule, will request additional information necessary to make the PCN complete only once. However, if the prospective permittee does not provide all of the requested information, then the district engineer will notify the prospective permittee that the PCN is still incomplete and the PCN review process will not commence until all of the requested information has been received by the district engineer. The prospective permittee shall not begin the activity until either:

(1) He or she is notified in writing by the district engineer that the activity may proceed under the NWP with any special conditions imposed by the district or division engineer; or

(2) Forty-five calendar days have passed from the district engineer's receipt of the complete PCN and the prospective permittee has not received written notice from the district or division engineer. However, if the permittee was required to notify the Corps pursuant to general condition 17 that listed species or critical habitat might affected or in the vicinity of the project, or to notify the Corps pursuant to general condition 18 that the activity may have the potential to cause effects to historic properties, the permittee cannot begin the activity until receiving written notification from the Corps that is "no effect" on listed species or "no potential to cause effects" on historic properties, or that any consultation required under Section 7 of the Endangered Species Act (see 33 CFR 330.4(f)) and/or Section 106 of the National Historic Preservation (see 33 CFR 330.4(g)) is completed. Also, work cannot begin under NWPs 21, 49, or 50 until the permittee has received written approval from the Corps. If the proposed activity requires a written waiver to exceed specified limits of an NWP, the permittee cannot begin the activity until the district engineer issues the waiver. If the district or division engineer notifies the permittee in writing that an individual permit is required within 45 calendar days of receipt of a complete PCN, the permittee cannot begin the activity until an individual permit has been obtained. Subsequently, the permittee's right to proceed under the NWP may be modified, suspended, or revoked only in accordance with the procedure set forth in 33 CFR 330.5(d)(2).

(b) Contents of Pre-Construction Notification: The PCN must be in writing and include the following information:

(1) Name, address and telephone numbers of the prospective permittee;

(2) Location of the proposed project;

(3) A description of the proposed project; the project's purpose; direct and indirect adverse environmental effects the project would cause; any other NWP(s), regional general permit(s), or individual permit(s) used or intended to be used to authorize any part of the proposed project or any related activity. The description should be sufficiently detailed to allow the district engineer to determine that the adverse effects of the project will be minimal and to determine the need for compensatory mitigation. Sketches should be provided when necessary to show that the activity complies with the terms of the NWP. (Sketches usually clarify the project and when provided result in a quicker decision.);

(4) The PCN must include a delineation of special aquatic sites and other waters of the United States on the project site. Wetland delineations must be prepared in accordance with the current method required by the Corps. The permittee may ask the Corps to delineate the special aquatic sites and other waters of the United States, but there may be a delay if the Corps does the delineation, especially if the project site is large or contains many waters of the United States. Furthermore, the 45 day period will not start until the delineation has been submitted to or completed by the Corps, where appropriate;

(5) If the proposed activity will result in the loss of greater than 1/10 acre of wetlands and a PCN is required, the prospective permittee must submit a statement describing how the mitigation requirement

will be satisfied. As an alternative, the prospective permittee may submit a conceptual or detailed mitigation plan.

(6) If any listed species or designated critical habitat might be affected or is in the vicinity of the project, or if the project is located in designated critical habitat, for non-Federal applicants the PCN must include the name(s) of those endangered or threatened species that might be affected by the proposed work or utilize the designated critical habitat that may be affected by the proposed work. Federal applicants must provide documentation demonstrating compliance with the Endangered Species Act; and

(7) For an activity that may affect a historic property listed on, determined to be eligible for listing on, or potentially eligible for listing on, the National Register of Historic Places, for non-Federal applicants the PCN must state which historic property may be affected by the proposed work or include a vicinity map indicating the location of the historic property. Federal applicants must provide documentation demonstrating compliance with Section 106 of the National Historic Preservation Act.

(c) Form of Pre-Construction Notification: The standard individual permit application form (Form ENG 4345) may be used, but the completed application form must clearly indicate that it is a PCN and must include all of the information required in paragraphs (b)(1) through (7) of this general condition. A letter containing the required information may also be used.

(d) Agency Coordination: (1) The district engineer will consider any comments from Federal and state agencies concerning the proposed activity's compliance with the terms and conditions of the NWPs and the need for mitigation to reduce the project's adverse environmental effects to a minimal level.

(2) For all NWP 48 activities requiring pre-construction notification and for other NWP activities requiring pre-construction notification to the district engineer that result in the loss of greater than 1/2-acre of waters of the United States, the district engineer will immediately provide (e.g., via facsimile transmission, overnight mail, or other expeditious manner) a copy of the PCN to the appropriate Federal or state offices (U.S. FWS, state natural resource or water quality agency, EPA, State Historic Preservation Officer (SHPO) or Tribal Historic Preservation Office (THPO), and, if appropriate, the NMFS). With the exception of NWP 37, these agencies will then have 10 calendar days from the date the material is transmitted to telephone or fax the district engineer notice that they intend to provide substantive, site-specific comments. If so contacted by an agency, the district engineer will wait an additional 15 calendar days before making a decision on the pre-construction notification. The district engineer will fully consider agency comments received within the specified time frame, but will provide no response to the resource agency, except as provided below. The district engineer will indicate in the administrative record associated with each pre-construction notification that the resource agencies' concerns were considered. For NWP 37, the emergency watershed protection and rehabilitation activity may proceed immediately in cases where there is an unacceptable hazard to life or a significant loss of property or economic hardship will occur. The district engineer will consider any comments received to decide whether the NWP 37 authorization should be modified, suspended, or revoked in accordance with the procedures at 33 CFR 330.5.

(3) In cases of where the prospective permittee is not a Federal agency, the district engineer will provide a response to NMFS within 30 calendar days of receipt of any Essential Fish Habitat conservation recommendations, as required by Section 305(b)(4)(B) of the Magnuson-Stevens Fishery Conservation and Management Act.

(4) Applicants are encouraged to provide the Corps multiple copies of pre-construction notifications to expedite agency coordination.

(5) For NWP 48 activities that require reporting, the district engineer will provide a copy of each report within 10 calendar days of receipt to the appropriate regional office of the NMFS.

(e) District Engineer's Decision: In reviewing the PCN for the proposed activity, the district engineer will determine whether the activity authorized by the NWP will result in more than minimal individual or cumulative adverse environmental effects or may be contrary to the public interest. If the proposed activity requires a PCN and will result in a loss of greater than 1/10 acre of wetlands, the prospective permittee should submit a mitigation proposal with the PCN. Applicants may also propose compensatory mitigation for projects with smaller impacts. The district engineer will consider any

proposed compensatory mitigation the applicant has included in the proposal in determining whether the net adverse environmental effects to the aquatic environment of the proposed work are minimal. The compensatory mitigation proposal may be either conceptual or detailed. If the district engineer determines that the activity complies with the terms and conditions of the NWP and that the adverse effects on the aquatic environment are minimal, after considering mitigation, the district engineer will notify the permittee and include any conditions the district engineer deems necessary. The district engineer must approve any compensatory mitigation proposal before the permittee commences work. If the prospective permittee elects to submit a compensatory mitigation plan with the PCN, the district engineer will expeditiously review the proposed compensatory mitigation plan. The district engineer must review the plan within 45 calendar days of receiving a complete PCN and determine whether the proposed mitigation would ensure no more than minimal adverse effects on the aquatic environment. If the net adverse effects of the project on the aquatic environment (after consideration of the compensatory mitigation proposal) are determined by the district engineer to be minimal, the district engineer will provide a timely written response to the applicant. The response will state that the project can proceed under the terms and conditions of the NWP.

If the district engineer determines that the adverse effects of the proposed work are more than minimal, then the district engineer will notify the applicant either: (1) That the project does not qualify for authorization under the NWP and instruct the applicant on the procedures to seek authorization under an individual permit; (2) that the project is authorized under the NWP subject to the applicant's submission of a mitigation plan that would reduce the adverse effects on the aquatic environment to the minimal level; or (3) that the project is authorized under the NWP with specific modifications or conditions. Where the district engineer determines that mitigation is required to ensure no more than minimal adverse effects occur to the aquatic environment, the activity will be authorized within the 45-day PCN period. The authorization will include the necessary conceptual or specific mitigation or a requirement that the applicant submit a mitigation plan that would reduce the adverse effects on the aquatic environment to the minimal level. When mitigation is required, no work in waters of the United States may occur until the district engineer has approved a specific mitigation plan.

28. Single and Complete Project. The activity must be a single and complete project. The same NWP cannot be used more than once for the same single and complete project.

FURTHER INFORMATION

1. District Engineers have authority to determine if an activity complies with the terms and conditions of an NWP.

2. NWPs do not obviate the need to obtain other federal, state, or local permits, approvals, or authorizations required by law.

3. NWPs do not grant any property rights or exclusive privileges.

4. NWPs do not authorize any injury to the property or rights of others.

5. NWPs do not authorize interference with any existing or proposed Federal project.

DEFINITIONS

Best management practices (BMPs): Policies, practices, procedures, or structures implemented to mitigate the adverse environmental effects on surface water quality resulting from development. BMPs are categorized as structural or non-structural.

Compensatory mitigation: The restoration, establishment (creation), enhancement, or preservation of aquatic resources for the purpose of compensating for unavoidable adverse impacts which remain after all appropriate and practicable avoidance and minimization has been achieved.

Currently serviceable: Useable as is or with some maintenance, but not so degraded as to essentially require reconstruction.

Discharge: The term "discharge" means any discharge of dredged or fill material.

Enhancement: The manipulation of the physical, chemical, or biological characteristics of an aquatic resource to heighten, intensify, or improve a specific aquatic resource function(s). Enhancement results in the gain of selected aquatic resource function(s), but may also lead to a decline in other aquatic resource function(s). Enhancement does not result in a gain in aquatic resource area.

Ephemeral stream: An ephemeral stream has flowing water only during, and for a short duration after, precipitation events in a typical year. Ephemeral stream beds are located above the water table year-round. Groundwater is not a source of water for the stream. Runoff from rainfall is the primary source of water for stream flow.

Establishment (creation): The manipulation of the physical, chemical, or biological characteristics present to develop an aquatic resource that did not previously exist at an upland site. Establishment results in a gain in aquatic resource area.

Historic Property: Any prehistoric or historic district, site (including archaeological site), building, structure, or other object included in, or eligible for inclusion in, the National Register of Historic Places maintained by the Secretary of the Interior. This term includes artifacts, records, and remains that are related to and located within such properties. The term includes properties of traditional religious and cultural importance to an Indian tribe or Native Hawaiian organization and that meet the National Register criteria (36 CFR part 60).

Independent utility: A test to determine what constitutes a single and complete project in the Corps regulatory program. A project is considered to have independent utility if it would be constructed absent the construction of other projects in the project area. Portions of a multi-phase project that depend upon other phases of the project do not have independent utility. Phases of a project that would be constructed even if the other phases were not built can be considered as separate single and complete projects with independent utility.

Intermittent stream: An intermittent stream has flowing water during certain times of the year, when groundwater provides water for stream flow. During dry periods, intermittent streams may not have flowing water. Runoff from rainfall is a supplemental source of water for stream flow.

Loss of waters of the United States: Wate rs of the United States that are permanently adversely affected by filling, flooding, excavation, or drainage because of the regulated activity. Permanent adverse effects include permanent discharges of dredged or fill material that change an aquatic area to dry land, increase the bottom elevation of a waterbody, or change the use of a waterbody. The acreage of loss of waters of the United States is a threshold measurement of the impact to jurisdictional waters for determining whether a project may qualify for an NWP; it is not a net threshold that is calculated after considering compensatory mitigation that may be used to offset losses of aquatic functions and services. The loss of stream bed includes the linear feet of stream bed that is filled or excavated. Waters of the United States temporarily filled, flooded, excavated, or drained, but restored to pre-construction contours and elevations after construction, are not included in the measurement of loss of waters of the United States. Impacts resulting from activities eligible for exemptions under Section 404(f) of the Clean Water Act are not considered when calculating the loss of waters of the United States.

Non-tidal wetland: A non-tidal wetland is a wetland that is not subject to the ebb and flow of tidal waters. The definition of a wetland can be found at 33 CFR 328.3(b). Non-tidal wetlands contiguous to tidal waters are located landward of the high tide line (i.e., spring high tide line).

Open water: For purposes of the NWPs, an open water is any area that in a year with normal patterns of precipitation has water flowing or standing above ground to the extent that an ordinary high water mark can be determined. Aquatic vegetation within the area of standing or flowing water is either non-emergent, sparse, or absent. Vegetated shallows are considered to be open waters. Examples of "open waters" include rivers, streams, lakes, and ponds.

Ordinary High Water Mark: An ordinary high water mark is a line on the shore established by the fluctuations of water and indicated by physical characteristics, or by other appropriate means that consider the characteristics of the surrounding areas (see 33 CFR 328.3(e)).

Perennial stream: A perennial stream has flowing water year-round during a typical year. The water table is located above the stream bed for most of the year. Groundwater is the primary source of water for stream flow. Runoff from rainfall is a supplemental source of water for stream flow.

Practicable: Available and capable of being done after taking into consideration cost, existing technology, and logistics in light of overall project purposes.

Pre-construction notification: A request submitted by the project proponent to the Corps for confirmation that a particular activity is authorized by nationwide permit. The request may be a permit application, letter, or similar document that includes information about the proposed work and its anticipated environmental effects. Pre-construction notification may be required by the terms and conditions of a nationwide permit, or by regional conditions. A pre-construction notification may be voluntarily submitted in cases where pre-construction notification is not required and the project proponent wants confirmation that the activity is authorized by nationwide permit.

Preservation: The removal of a threat to, or preventing the decline of, aquatic resources by an action in or near those aquatic resources. This term includes activities commonly associated with the protection and maintenance of aquatic resources through the implementation of appropriate legal and physical mechanisms. Preservation does not result in a gain of aquatic resource area or functions.

Re-establishment: The manipulation of the physical, chemical, or biological characteristics of a site with the goal of returning natural/historic functions to a former aquatic resource. Re-establishment results in rebuilding a former aquatic resource and results in a gain in aquatic resource area.

Rehabilitation: The manipulation of the physical, chemical, or biological characteristics of a site with the goal of repairing natural/historic functions to a degraded aquatic resource. Rehabilitation results in a gain in aquatic resource function, but does not result in a gain in aquatic resource area.

Restoration: The manipulation of the physical, chemical, or biological characteristics of a site with the goal of returning natural/historic functions to a former or degraded aquatic resource. For the purpose of tracking net gains in aquatic resource area, restoration is divided into two categories: re-establishment and rehabilitation.

Riffle and pool complex: Riffle and pool complexes are special aquatic sites under the 404(b)(1) Guidelines. Riffle and pool complexes sometimes characterize steep gradient sections of streams. Such stream sections are recognizable by their hydraulic characteristics. The rapid movement of water over a course substrate in riffles results in a rough flow, a turbulent surface, and high dissolved oxygen levels in the water. Pools are deeper areas associated with riffles. A slower stream velocity, a streaming flow, a smooth surface, and a finer substrate characterize pools.

Riparian areas: Riparian areas are lands adjacent to streams, lakes, and estuarine-marine shorelines. Riparian areas are transitional between terrestrial and aquatic ecosystems, through which surface and subsurface hydrology connects waterbodies with their adjacent uplands. Riparian areas provide a variety of ecological functions and services and help improve or maintain local water quality. (See general condition 20.)

Shellfish seeding: The placement of shellfish seed and/or suitable substrate to increase shellfish production. Shellfish seed consists of immature individual shellfish or individual shellfish attached to shells or shell fragments (i.e., spat on shell). Suitable substrate may consist of shellfish shells, shell fragments, or other appropriate materials placed into waters for shellfish habitat.

Single and complete project: The term "single and complete project" is defined at 33 CFR 330.2(i) as the total project proposed or accomplished by one owner/developer or partnership or other association of owners/developers. A single and complete project must have independent utility (see definition). For linear projects, a "single and complete project" is all crossings of a single water of the United States (i.e., a single waterbody) at a specific location. For linear projects crossing a single waterbody several times at separate and distant locations, each crossing is considered a single and complete project. However, individual channels in a braided stream or river, or individual arms of a large, irregularly shaped wetland or lake, etc., are not separate waterbodies, and crossings of such features cannot be considered separately.

Stormwater management: Stormwater management is the mechanism for controlling stormwater runoff for the purposes of reducing downstream erosion, water quality degradation, and flooding and mitigating the adverse effects of changes in land use on the aquatic environment.

Stormwater management facilities: Stormwater management facilities are those facilities, including but not limited to, stormwater retention and detention ponds and best management practices, which retain water for a period of time to control runoff and/or improve the quality (i.e., by reducing the concentration of nutrients, sediments, hazardous substances and other pollutants) of stormwater runoff.

Stream bed: The substrate of the stream channel between the ordinary high water marks. The substrate may be bedrock or inorganic particles that range in size from clay to boulders. Wetlands contiguous to the stream bed, but outside of the ordinary high water marks, are not considered part of the stream bed.

Stream channelization: The manipulation of a stream's course, condition, capacity, or location that causes more than minimal interruption of normal stream processes. A channelized stream remains a water of the United States.

Structure: An object that is arranged in a definite pattern of organization. Examples of structures include, without limitation, any pier, boat dock, boat ramp, wharf, dolphin, weir, boom, breakwater, bulkhead, revetment, riprap, jetty, artificial island, artificial reef, permanent mooring structure, power transmission line, permanently moored floating vessel, piling, aid to navigation, or any other manmade obstacle or obstruction.

Tidal wetland: A tidal wetland is a wetland (i.e., water of the United States) that is inundated by tidal waters. The definitions of a wetland and tidal waters can be found at 33 CFR 328.3(b) and 33 CFR 328.3(f), respectively. Tidal waters rise and fall in a predictable and measurable rhythm or cycle due to the gravitational pulls of the moon and sun. Tidal waters end where the rise and fall of the water surface can no longer be practically measured in a predictable rhythm due to masking by other waters, wind, or other effects. Tidal wetlands are located channelward of the high tide line, which is defined at 33 CFR 328.3(d).

Vegetated shallows: Vegetated shallows are special aquatic sites under the 404(b)(1) Guidelines. They are areas that are permanently inundated and under normal circumstances have rooted aquatic vegetation, such as seagrasses in marine and estuarine systems and a variety of vascular rooted plants in freshwater systems.

Waterbody: For purposes of the NWPs, a waterbody is a jurisdictional water of the United States that, during a year with normal patterns of precipitation, has water flowing or standing above ground to the extent that an ordinary high water mark (OHWM) or other indicators of jurisdiction can be determined, as well as any wetland area (see 33 CFR 328.3(b)). If a jurisdictional wetland is adjacent--meaning bordering, contiguous, or neighboring--to a jurisdictional waterbody displaying an OHWM or other indicators of jurisdiction, that waterbody and its adjacent wetlands are considered together as a single aquatic unit (see 33 CFR 328.4(c)(2)). Examples of "waterbodies" include streams, rivers, lakes, ponds, and wetlands.

REGIONAL CONDITIONS FOR NATIONWIDE PERMITS IN THE WILMINGTON DISTRICT

1.0. Excluded Waters
The Corps has identified waters that will be excluded from the use of all NWP's during certain timeframes. These waters are:

1.1. Anadromous Fish Spawning Areas
Waters of the United States identified by either the North Carolina Division of Marine Fisheries (NCDMF) or the North Carolina Wildlife Resources Commission (NCWRC) as anadromous fish spawning areas are excluded during the period between February 15 and June 30, without prior written approval from NCDMF or NCWRC and the Corps.

1.2. Trout Waters Moratorium
Waters of the United States in the twenty-five designated trout counties of North Carolina are excluded during the period between October 15 and April 15 without prior written approval from the NCWRC. (see Section I. b. 7. for a list of the twenty-five trout counties).

1.3. Sturgeon Spawning Areas
Waters of the United States designated as sturgeon spawning areas are excluded during the period between February 1 and June 30, without prior written approval from the National Marine Fisheries Service (NMFS).

* **2.0. Waters Requiring Additional Notification**
The Corps has identified waters that will be subject to additional notification requirements for activities authorized by all NWP's. These waters are:

* **2.1. Western NC Counties that Drain to Designated Critical Habitat**
Waters of the U.S. that requires a Pre-Construction Notification pursuant to General Condition 27 (PCN) and located in the sixteen counties listed below, applicants must provide a copy of the PCN to the US Fish and Wildlife Service, 160 Zillicoa Street, Asheville, North Carolina 28805. This PCN must be sent concurrently to the US Fish and Wildlife Service and the Corps Asheville Regulatory Field Office. Please see General Condition 17 for specific notification requirements related to Federally Endangered Species and the following website for information on the location of designated critical habitat.
Counties with tributaries that drain to designated critical habitat that require notification to the Asheville US Fish and Wildlife Service: Avery, Cherokee, Forsyth, Graham, Haywood, Henderson, Jackson, Macon Mecklenburg, Mitchell, Stokes, Surry, Swain, Transylvania, Union and Yancey.

Website and office addresses for Endangered Species Act Information:
The Wilmington District has developed the following website for applicants which provide guidelines on how to review linked websites and maps in order to fulfill NWP general condition 17 requirements.

http://www.saw.usace.army.mil/wetlands/ESA

Applicants who do not have internet access may contact the appropriate US Fish and Wildlife Service offices or the US Army Corps of Engineers office listed below.

US Fish and Wildlife Service
Asheville Field Office
160 Zillicoa Street
Asheville, NC 28801
Telephone: (828) 258-3939

Asheville US Fish and Wildlife Service Office counties: All counties west of and including Anson, Stanly, Davidson, Forsyth and Stokes Counties

US Fish and Wildlife Service
Raleigh Field Office
Post Office Box 33726
Raleigh, NC 27636-3726
Telephone: (919) 856-4520

Raleigh US Fish and Wildlife Service Office counties: all counties east of and including Richmond, Montgomery, Randolph, Guilford, and Rockingham Counties.

* **2.2. Special Designation Waters**

Prior to the use of any NWP in any of the following North Carolina identified waters and contiguous wetlands, applicants must comply with Nationwide Permit General Condition 27 (PCN). The North Carolina waters and contiguous wetlands that require additional notification requirements are:

"Outstanding Resource Waters" (ORW) and "High Quality Waters" (HQW) (as designated by the North Carolina Environmental Management Commission), or
"Inland Primary Nursery Areas" (IPNA) (as designated by the North Carolina Wildlife Resources Commission), or "Contiguous Wetlands" (as defined by the North Carolina Environmental Management Commission), or "Primary Nursery Areas" (PNA) (as designated by the North Carolina Marine Fisheries Commission).

2.3. Coastal Area Management Act (CAMA) Areas of Environmental Concern

Non-Federal applicants for any NWP in a designated "Area of Environmental Concern" (AEC) in the twenty (20) counties of Eastern North Carolina covered by the North Carolina Coastal Area Management Act (CAMA), must also obtain the required CAMA permit. Construction activities for non-Federal projects may not commence until a copy of the approved CAMA permit is furnished to the appropriate Wilmington District Regulatory Field Office (Wilmington Field Office – P.O. Box 1890, Wilmington, NC 28402 or Washington Field Office – P.O. Box 1000, Washington, NC 27889).

* **2. 4. Barrier Islands**

Prior to the use of any NWP on a barrier island of North Carolina, applicants must comply with Nationwide Permit General Condition 27 (PCN).

* **2.5. Mountain or Piedmont Bogs**

Prior to the use of any NWP in a "Mountain or Piedmont Bog" of North Carolina, applicants shall comply with Nationwide Permit General Condition 27 (PCN).
Note: The following wetland community types identified in the N.C. Natural Heritage Program document, "Classification of Natural communities of North Carolina (Michael P. Schafale and Alan S. Weakley, 1990), are subject to this regional condition.

Mountain Bogs	Piedmont Bogs
Swamp Forest-Bog Complex	Upland depression Swamp Forest
Swamp Forest-Bog Complex (Spruce Subtype)	
Southern Appalachian Bog (Northern Subtype)	
Southern Appalachian Bog (Southern Subtype)	
Southern Appalachian Fen	

* **2.6. Animal Waste Facilities**

Prior to use of any NWP for construction of animal waste facilities in waters of the US, including wetlands, applicants shall comply with Nationwide Permit General Condition 27 (PCN).

* **2.7. Trout Waters**

Prior to any discharge of dredge or fill material into streams or waterbodies within the twenty-five (25) designated trout counties of North Carolina, the applicant shall comply with

Nationwide Permit General Condition 27 (PCN). The applicant shall also provide a copy of the notification to the appropriate NCWRC office to facilitate the determination of any potential impacts to designated Trout Waters. Notification to the Corps of Engineers will include a statement with the name of the NCWRC biologist contacted, the date of the notification, the location of work, a delineation of wetlands, a discussion of alternatives to working in the mountain trout waters, why alternatives were not selected, and a plan to provide compensatory mitigation for all unavoidable adverse impacts to mountain trout waters.

NCWRC and NC Trout Counties

Mr. Ron Linville			
Western Piedmont Region Coordinator	Alleghany	Caldwell	Watauga
3855 Idlewild Road	Ashe	Mitchell	Wilkes
Kernersville, NC 27284-9180	Avery	Stokes	
Telephone: (336) 769-9453	Burke	Surry	

Mr. Dave McHenry			
Mountain Region Coordinator	Buncombe	Henderson	Polk
20830 Great Smoky Mtn. Expressway	Cherokee	Jackson	Rutherford
Waynesville, NC 28786	Clay	Macon	Swain
Telephone: (828) 452-2546	Graham	Madison	Transylvania
Fax: (828) 452-7772	Haywood	McDowell	Yancey

3.0. List of Corps Regional Conditions for All Nationwide Permits

The following conditions apply to all Nationwide Permits in the Wilmington District:

3.1. Limitation of Loss of Perennial Stream Bed

NWPs may not be used for activities that may result in the loss or degradation of greater than 300 total linear feet of perennial streams. The NWPs may not be used for activities that may result in the loss or degradation of greater than 300 total linear feet of ephemeral and intermittent streams that exhibit important aquatic function(s)* Loss of stream includes the linear feet of stream bed that is filled, excavated, or flooded by the proposed activity. The District Commander can waive the 300 linear foot limit for ephemeral and intermittent streams on a case-by-case basis if he determines that the proposed activity will result in minimal individual and cumulative adverse impacts to the aquatic environment. Waivers for the loss of ephemeral and intermittent streams must be in writing. This waiver only applies to the 300 linear feet threshold for NWPs. Mitigation may still be required for impacts to ephemeral and intermittent streams, on a case-by-case basis, depending on the impacts to the aquatic environment of the

proposed project. [*Note: The Corps uses the Stream Quality Assessment Worksheet, located with Permit Information on the Regulatory Program Web Site, to aid in the determination of aquatic function within the intermittent stream channel.]

3.2. Mitigation for Loss of Stream Bed Exceeding 150 Feet.

For any NWP that results in a loss of more than 150 linear feet of perennial and/or ephemeral/intermittent stream, the applicant shall provide a mitigation proposal to compensate for the loss of aquatic function associated with the proposed activity. For stream losses less than 150 linear feet, that require a PCN, the District Commander may determine, on a case-by-case basis that compensatory mitigation is required to ensure that the activity results in minimal adverse effect on the aquatic environment.

3.3. Pre-construction Notification for Loss of Streambed Exceeding 150 Feet.

Prior to use of any NWP for any activity which impacts more than 150 total linear feet of perennial stream or ephemeral/ intermittent stream, the applicant must comply with Nationwide Permit General Condition 27 (PCN). This applies to NWPs that do not have specific notification requirements. If a NWP has specific notification requirements, the requirements of the NWP should be followed.

3.4. Restriction on Use of Live Concrete

For all NWPs which allow the use of concrete as a building material, measures will be taken to prevent live or fresh concrete, including bags of uncured concrete, from coming into contact with waters of the state until the concrete has hardened.

3.5. Requirements for Using Riprap for Bank Stabilization
For all NWPs that allow for the use of riprap material for bank stabilization, the following measures shall be applied:

3.5.1. Filter cloth must be placed underneath the riprap as an additional requirement of its use in North Carolina waters.

3.5.2. The placement of riprap shall be limited to the areas depicted on submitted work plan drawings.

3.5.3. The riprap material shall be clean and free from loose dirt or any pollutant except in trace quantities that would not have an adverse environmental effect.

3.5.4. It shall be of a size sufficient to prevent its movement from the authorized alignment by natural forces under normal conditions.
3.5.5. The riprap material shall consist of clean rock or masonry material such as, but not limited to, granite, marl, or broken concrete.
21

3.5.6. A waiver from the specifications in this Regional Condition may be requested in writing. The waiver will only be issued if it can be demonstrated that the impacts of complying with this Regional condition would result in greater adverse impacts to the aquatic environment.

3.6. Safe Passage Requirements for Culvert Placement
For all NWPs that involve the construction/installation of culverts, measures will be included in the construction/installation that will promote the safe passage of fish and other aquatic organisms. The dimension, pattern, and profile of the stream above and below a pipe or culvert should not be modified by widening the stream channel or by reducing the depth of the stream in connection with the construction activity. The width, height, and gradient of a proposed opening should be such as to pass the average historical low flow and spring flow without adversely altering flow velocity. Spring flow should be determined from gage data, if available. In the absence of such data, bankfull flow can be used as a comparable level.

In the twenty (20) counties of North Carolina designated as coastal counties by the Coastal Area Management Act (CAMA): All pipe and culvert bottoms shall be buried at least one foot below normal bed elevation when they are placed within the Public Trust Area of Environmental Concern (AEC) and/or the Estuarine Waters AEC as designated by CAMA, and/or all streams appearing as blue lines on United States Geological Survey (USGS) quad sheets.

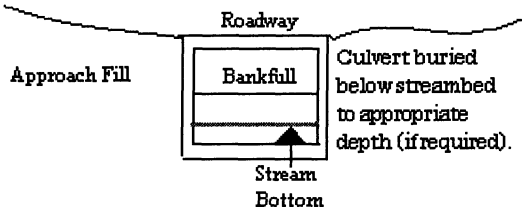

In all other counties: Culverts greater than 48 inches in diameter will be buried at least one foot below the bed of the stream. Culverts 48 inches in diameter or less shall be buried or placed on the stream bed as practicable and appropriate to maintain aquatic passage, and every effort shall be made to maintain the existing channel slope. The bottom of the culvert must be placed at a depth below the natural stream bottom to provide for passage during drought or low flow conditions.
Destabilizing the channel and head cutting upstream should be considered in the placement of the culvert.

A waiver from the depth specifications in this condition may be requested in writing. The waiver will be issued if it can be demonstrated that the proposal would result in the least impacts to the aquatic environment.
All counties: Culverts placed in wetlands do not have to be buried.

3.7. Notification to NCDENR Shellfish Sanitation Section
Applicants shall notify the NCDENR Shellfish Sanitation Section prior to dredging in or removing sediment from an area closed to shell fishing where the effluent may be released to an area open for shell fishing or swimming in order to avoid contamination from the disposal area and cause a temporary shellfish closure to be made. Such notification shall also be provided to the appropriate Corps of Engineers Regulatory Field Office. Any disposal of sand to the ocean beach should occur between November 1 and April 30 when recreational usage is low. Only clean sand should be used and no dredged sand from closed shell fishing areas may be used. If beach disposal were to occur at times other than stated above or if sand from a closed shell fishing area is to be used, a swimming advisory shall be posted, and a press release shall be issued.

3.8. Preservation of Submerged Aquatic Vegetation
Adverse impacts to Submerged Aquatic Vegetation (SAV) are not authorized by any NWP within any of the twenty coastal counties defined by North Carolina's Coastal Area Management Act of 1974 (CAMA).

4.0 Additional Regional Conditions Applicable to Specific Nationwide Permits

The following regional conditions are required for **NWP #33** – Temporary Construction, Access and Dewatering:

4.1. The required restoration plan must include a timetable for restoration activities.

NC DIVISION OF WATER QUALITY - GENERAL CERTIFICATION CONDITIONS

For the most recent General Certification conditions, call the NC Division of Water Quality, Wetlands/401 Certification Unit at (919) 733-1786 or access the following website:

http://h2o.enr.state.nc.us/ncwetlands/certs.html

NC DIVISION OF COASTAL MANAGEMENT - STATE CONSISTENCY

In a letter dated May 7, 2007, the North Carolina Division of Coastal Management found this NWP consistent with the North Carolina Coastal Zone Management Program. Updates on CAMA Consistency for NC can be found on the NC DCM web site at:

http://dcm2.enr.state.nc.us/Permits/consist.htm

EASTERN BAND OF THE CHEROKEE INDIANS TRIBAL WATER QUALITY CERTIFICATIONS

In a letter dated May 8, 2007, US EPA, on behalf of the Eastern Band of Cherokee Indians, provided Tribal General Conditions for Nationwide Permits on Cherokee Indian Reservation. These Tribal General Conditions are located on the Corps website at:

http://www.saw.usace.army.mil/WETLANDS/NWP2007/EBCI-certs.html

Citations:

2007 Nationwide Permits Public Notice for Final Issue Date: March 15, 2007

Correction Notice for Nationwide Permits, Federal Register / Vol. 72, No. 88 / Tuesday, May 8, 2007 / Notices p.26082

2007 SAW Regional Conditions – Authorized June 1, 2007

This and other information can be found on the Corps web site at:

http://www.saw.usace.army.mil/WETLANDS/NWP2007/nationwide-permits.html

Water Quality Certification N°. 3688

GENERAL CERTIFICATION FOR PROJECTS ELIGIBLE FOR U.S. ARMY CORPS OF ENGINEERS NATIONWIDE PERMIT NUMBER 33 (TEMPORARY CONSTRUCTION, ACCESS AND DEWATERING) AND RIPARIAN AREA PROTECTION RULES (BUFFER RULES)

Water Quality Certification Number 3688 is issued in conformity with the requirements of Section 401, Public Laws 92-500 and 95-217 of the United States and subject to the North Carolina Division of Water Quality Regulations in 15A NCAC 2H, Section .0500 and 15A NCAC 2B .0200 for the discharge of fill material to waters and wetland areas as described in 33 CFR 330 Appendix A (B) (33) and for the Riparian Area Protection Rules (Buffer Rules) in 15A NCAC 2B .0200. The category of activities shall include any fill activity for temporary construction, access and de-watering.

The State of North Carolina certifies that the specified category of activity will not violate appropriate portions of Sections 301, 302, 303, 306 and 307 of the Public Laws 92-500 and 95-217 if conducted in accordance with the conditions hereinafter set forth.

Activities covered by this General Certification *do not* require written approval from the Division of Water Quality (the "Division") as long as they comply with the Conditions listed below. **If any of these Conditions cannot be met, or if the activity is associated with or in response to a Notice of Violation from the Division of Water Quality or the NC Division of Land Resources, then written approval from the Division is required. Activities that are located within river basins with Riparian Area Protection Rules (Buffer Rules) require written approval unless listed in the as "Exempt" within the riparian rules.**

* In accordance with North Carolina General Statute Section 143-215.3D(e), any requirement for written approval for a 401 Water Quality Certification must include the appropriate fee. If a project also requires a CAMA Permit, then one payment to both agencies shall be submitted and will be the higher of the two fees.

Conditions of Certification:

1. No Impacts Beyond those authorized by this Certification

   No waste, spoil, solids, or fill of any kind shall occur in wetlands, waters, or riparian areas beyond the thresholds authorized by this Certification, including incidental impacts. All construction activities, including the design, installation, operation, and maintenance of sediment and erosion control Best Management Practices, shall be performed so that no violations of state water quality standards, statutes, or rules occur.

2. Standard Erosion and Sediment Control Practices

   Erosion and sediment control practices shall be in full compliance with all specifications governing the proper design, installation and operation and maintenance of such Best Management Practices:

   a. Design, installation, operation, and maintenance of the sediment and erosion control measures must be such that they equal, or exceed, the requirements specified in the most recent version of the *North Carolina Sediment and Erosion Control Manual.* The devices shall be maintained on all construction sites, borrow sites, and waste pile (spoil) projects, including contractor-owned or leased borrow pits associated with the project.
   b. For borrow pit sites, the erosion and sediment control measures must be designed, installed, operated, and maintained in accordance with the most recent version of the *North Carolina Surface Mining Manual.*

Water Quality Certification N°. 3688

c. Reclamation measures and implementation must comply with the reclamation in accordance with the requirements of the Sedimentation Pollution Control Act and the Mining Act of 1971.
d. Sufficient materials required for stabilization and/or repair of erosion control measures and stormwater routing and treatment shall be on site at all times. except for publicly funded linear transportation projects when materials can be accessed offsite in a timely manner.
e. If the project occurs in waters or watersheds classified as Primary Nursery Areas (PNAs), Trout (Tr), SA, WS-I, WS-II, High Quality (HQW), or Outstanding Resource (ORW) waters, then the sediment and erosion control requirements contained within *Design Standards in Sensitive Watersheds* (15A NCAC 04B .0124) supercede all other sediment and erosion control requirements.

3. No Sediment and Erosion Control Measures in Wetlands or Waters

Sediment and erosion control measures should not be placed in wetlands or waters outside of the permitted impact areas without prior written approval from the Division. If placement of sediment and erosion control devices in wetlands and waters is unavoidable, then the design and placement of temporary erosion control measures shall not be conducted in a manner that may result in dis-equilibrium of wetlands or stream beds or banks, adjacent to or upstream and down stream of the above structures. All sediment and erosion control devices shall be removed and the natural grade restored within two (2) months of the date that the Division of Land Resources or locally delegated program has released the project.

4. Construction Stormwater Permit NCG010000

Upon the approval of an Erosion and Sedimentation Control Plan issued by the Division of Land Resources (DLR) or a DLR delegated local erosion and sedimentation control program, an NPDES General stormwater permit (NCG010000) administered by the Division is automatically issued to the project. This General Permit allows stormwater to be discharged during land disturbing construction activities as stipulated by conditions in the permit. If your project is covered by this permit [applicable to construction projects that disturb one (1) or more acres], full compliance with permit conditions including the sedimentation control plan, self-monitoring, record keeping and reporting requirements are required. A copy of this permit and monitoring report forms may be found at *http://h2o.enr.state.nc.us/su/Forms_Documents.htm*.

NCDOT shall be required to be in full compliance with the conditions related to construction activities within the most recent version of their individual NPDES (NCS000250) stormwater permit.

5. Construction Moratoriums and Coordination

All moratoriums on construction activities established by the NC Wildlife Resources Commission (WRC), US Fish and Wildlife Service (USFWS), NC Division of Marine Fisheries (DMF), or National Marine Fisheries Service (NMFS) to lessen impacts on trout, anadromous fish, larval/post-larval fishes and crustaceans, or other aquatic species of concern must be obeyed. This condition can be waived through written concurrence on a case by case basis upon reasonable justification.

Work within the twenty-five (25) designated trout counties or identified state or federal endangered or threatened species habitat shall be coordinated with the appropriate WRC, USFWS, NMFS, and/or DMF personnel.

Water Quality Certification N°. 3688

6. Riparian Area Protection (Buffer) Rules

   Activities located in the protected 50-foot wide riparian areas (whether jurisdictional wetlands or not) within the Neuse, Tar-Pamlico, Randleman and Catawba River Basins (or any other basin with buffer rules), shall be limited to "uses" identified within and constructed in accordance with 15A NCAC 2B .0233, .0259, .0250, and .0243, and shall be located, designed, constructed, and maintained to have minimal disturbance to protect water quality to the maximum extent practicable through the use of best management practices. All buffer rule requirements, including diffuse flow requirements, shall be met.

7. Water Supply Watershed Buffers

   The 100-foot wide (high-density development) or the 30-foot wide vegetative buffer (all other development) shall be maintained adjacent to all perennial waters except for allowances as provided in the Water Supply Watershed Protection Rules [15A NCAC 2B .0212 through .0215].

* 8. If an environmental document is required under NEPA or SEPA, then this General Certification is not valid until a Finding of No Significant Impact (FONSI) or Record of Decision (ROD) is issued by the State Clearinghouse.

9. Placement of culverts and other structures in waters, streams, and wetlands

   The application must include construction plans with cross-sectional details in order to indicate that the current stability of the stream will be maintained or enhanced (i.e., not result in head cuts).

   Culverts required for this project shall be designed and installed in such a manner that the original stream profiles are not altered and allow for aquatic life movement during low flows. Existing stream dimensions (including the cross section dimensions, pattern, and longitudinal profile) must be maintained above and below locations of each culvert. Placement of culverts and other structures in waters, streams, and wetlands must be placed below the elevation of the streambed by one foot for all culverts with a diameter greater than 48 inches, and 20 percent of the culvert diameter for culverts having a diameter less than 48 inches, to allow low flow passage of water and aquatic life. unless otherwise justified and approved by the Division

   Installation of culverts in wetlands must ensure continuity of water movement and be designed to adequately accommodate high water or flood conditions. Additionally, when roadways, causeways or other fill projects are constructed across FEMA-designated floodways or wetlands, openings such as culverts or bridges must be provided to maintain the natural hydrology of the system as well as prevent constriction of the floodway that may result in destabilization of streams or wetlands.

   Any rip rap required for normal pipe burial and stabilization shall be buried such that the original stream elevation is restored and maintained.

   The establishment of native, woody vegetation and other soft stream bank stabilization techniques must be used where practicable instead of rip-rap or other bank hardening methods.

Water Quality Certification N°. 3688

10. Work in the Dry

    All work in or adjacent to stream waters shall be conducted in a dry work area. Approved best management practices from the most current version of the NC Sediment and Erosion Control Manual, or the NC DOT Construction and Maintenance Activities Manual, such as sandbags, rock berms, cofferdams, and other diversion structures shall be used to minimize excavation in flowing water. Channel realignments shall be constructed by excavating the new channel from downstream to upstream before connecting it to the existing channel. Exceptions to this condition require submittal to, and approval by, the Division of Water Quality.

11. If concrete is used during the construction, then a dry work area should be maintained to prevent direct contact between curing concrete and stream water. Water that inadvertently contacts uncured concrete should not be discharged to surface waters due to the potential for elevated pH and possible aquatic life/fish kills.

12. Temporary Fills

    All temporary fill and culverts shall be removed and the impacted area returned to the original grade, including each stream's original cross sectional dimensions, planform pattern, and longitudinal bed and bed profile after construction is complete or within two (2) months of the establishment of the crossing, which ever is sooner, and the various sites shall be stabilized with natural woody vegetation (except for the maintenance areas of permanent utility crossings) and restored to prevent erosion. If the crossings are not completely removed and restored as described above within the specified time above, then written approval from the Division must be obtained to modify this condition.

13. Pipes shall be installed under the road or causeway in all streams to carry at least the 25-year storm event as outlined in the most recent edition of the *North Carolina Sediment and Erosion Control Planning and Design Manual* or the *North Carolina Surface Mining Manual* so as not to restrict stream flow during use of this General Certification.

14. For projects requiring written approval, additional site-specific conditions may be added to the cover letter in order to ensure compliance with all applicable water quality and effluent standards.

* 15. Certificate of Completion

    When written authorization is required for use of this certification, upon completion of all permitted impacts included within the approval and any subsequent modifications, the applicant shall be required to return the certificate of completion attached to the approval. One copy of the certificate shall be sent to the DWQ Central Office in Raleigh at 1650 Mail Service Center, Raleigh, NC, 27699-1650.

16. This General Certification shall expire three (3) years from the date of issuance of the written approval or on the same day as the expiration date of these corresponding Nationwide and Regional General Permits. In accordance with General Statute 136-44.7B, certifications issued to the NCDOT shall expire only upon expiration of the federal 404 Permit. The conditions in effect on the date of issuance of Certification for a specific project shall remain in effect for the life of the project, regardless of the expiration date of this Certification. If the construction process for approved activities will overlap the expiration and renewal date of the corresponding 404 Permit and the Corps allows for continued use of the 404 Permit, then the General Certification shall also remain in effect without requiring re-application and re-approval to use this Certification for the specific impacts already approved.

Water Quality Certification N°. 3688

17. The applicant/permittee and their authorized agents shall conduct all activities in a manner consistent with State water quality standards (including any requirements resulting from compliance with §303(d) of the Clean Water Act), and any other appropriate requirements of State and Federal Law. If the Division determines that such standards or laws are not being met, including failure to sustain a designated or achieved use, or that State or Federal law is being violated, or that further conditions are necessary to assure compliance, then the Division may reevaluate and modify this General Water Quality Certification.

Non-compliance with or violation of the conditions herein set forth by a specific fill project shall result in revocation of this General Certification for the project and may result in criminal and/or civil penalties.

The Director of the North Carolina Division of Water Quality may require submission of a formal application for individual certification for any project in this category of activity if it is determined that the project is likely to have a significant adverse effect upon water quality, including state or federally listed endangered or threatened aquatic species, or degrade the waters so that existing uses of the wetland, stream or downstream waters are precluded.

Public hearings may be held for specific applications or group of applications prior to a Certification decision if deemed in the public's best interest by the Director of the North Carolina Division of Water Quality.

Effective date: November 1, 2007

DIVISION OF WATER QUALITY

By

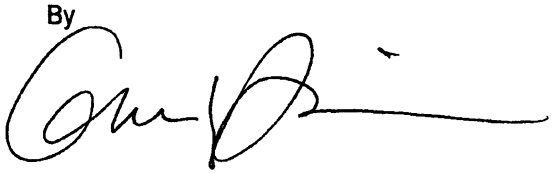

Coleen H. Sullins

Director

History Note: Water Quality Certification Number 3388 replaces Water Quality Certification Number 2727 issued on May 1, 1992, Certification Number 3114 issued on February 11, 1997, Certification Number 3366 issued March 18, 2002, and Certification Number 3634 issued March, 2007. This General Certification is rescinded when the Corps of Engineers reauthorize Nationwide Permit 33 or when deemed appropriate by the Director of the Division of Water Quality.

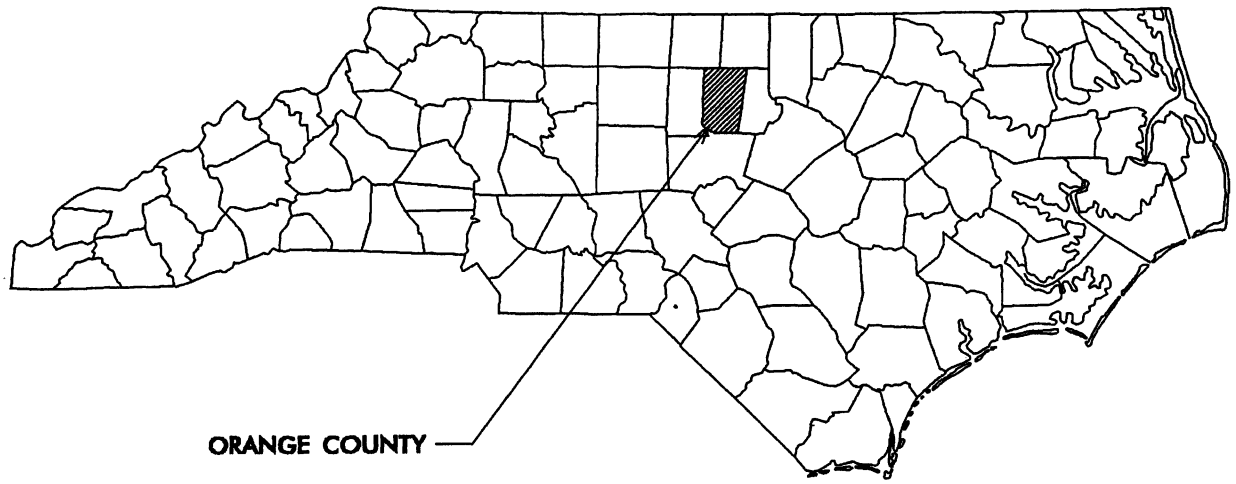

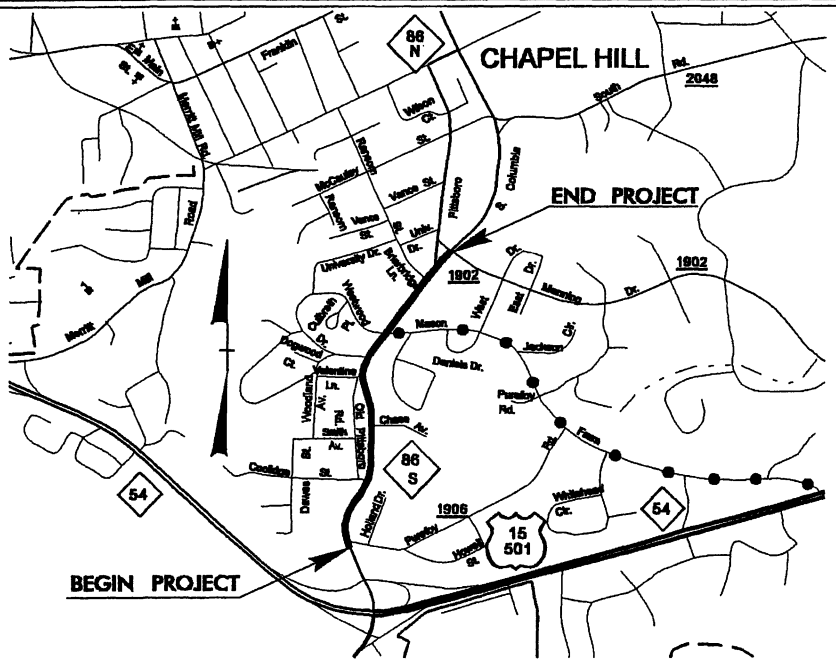

VICINITY MAPS

NCDOT

DIVISION OF HIGHWAYS
ORANGE COUNTY
PROJECT: 34762.1.1 (U-0624)
NC 86 (SOUTH COLUMBIA STREET)
FROM SR 1906 (PUREFOY ROAD)
TO SR 1902 (MANNING DRIVE)

SHEET 1 **OF** 8

PROPERTY OWNERS

NAMES AND ADDRESSES

PARCEL NO.	NAMES	ADDRESSES
19	J. GRAY McCALLISTER, III SUSAN M. McCALLISTER	P.O. BOX 431 CHAPEL HILL, NC 27514

NCDOT

DIVISION OF HIGHWAYS

ORANGE COUNTY

PROJECT: 34762.1.1 (U-0624)

NC 86 (SOUTH COLUMBIA STREET)

FROM SR 1906 (PUREFOY ROAD)

TO SR 1902 (MANNING DRIVE)

SHEET 2 OF 8

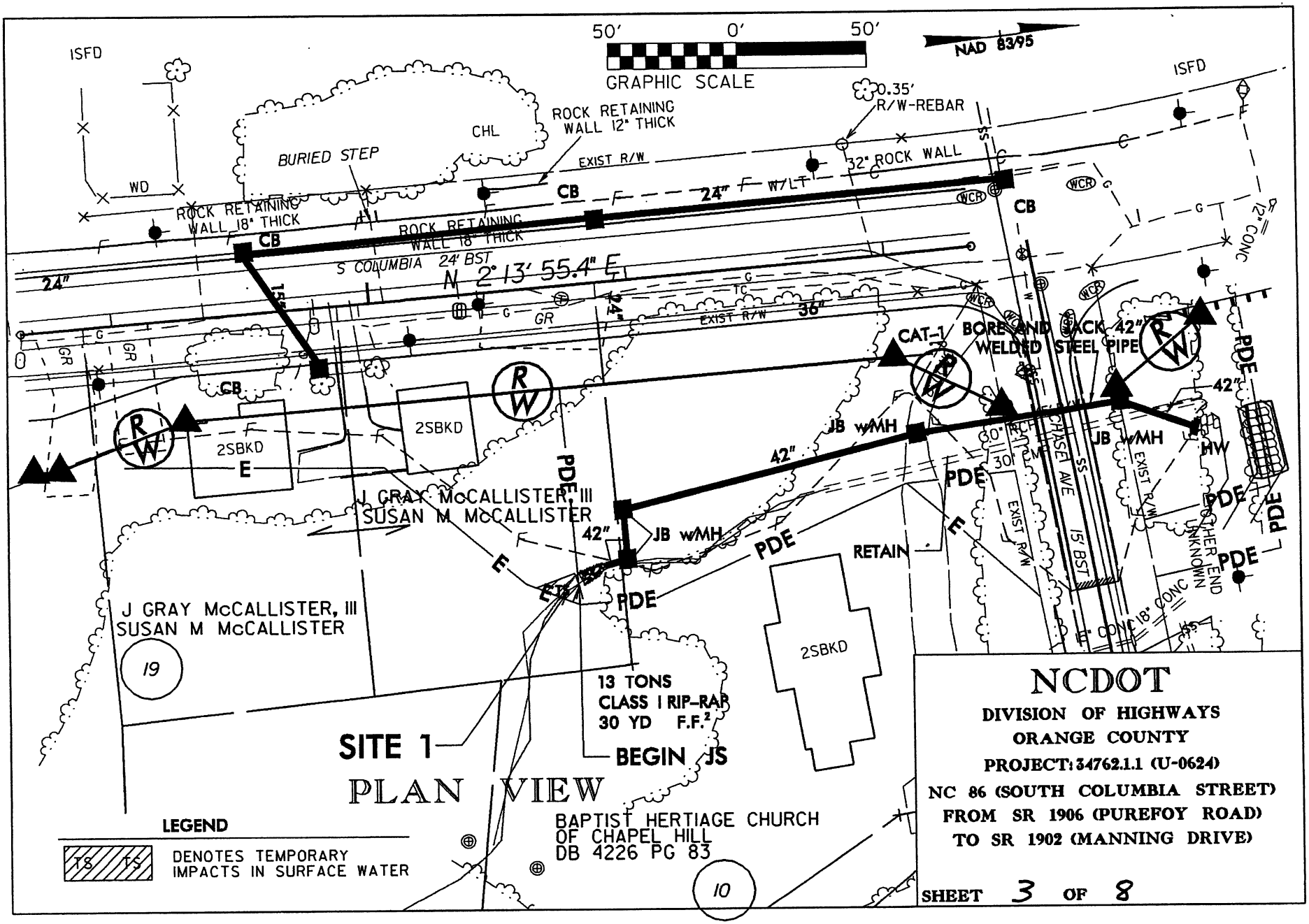
50' 0' 50'
GRAPHIC SCALE
NAD 83/95
ISFD
WD
CHL
BURIED STEP
ROCK RETAINING WALL 12" THICK
EXIST R/W
0.35' R/W-REBAR
32" ROCK WALL
ROCK RETAINING WALL 18" THICK
CB
24"
W/LT
S COLUMBIA 24' BST
N 2° 13' 55.4" E
36"
GR
TC
CAT-1
BORE AND JACK 42" WELDED STEEL PIPE
42"
JB w/MH
HW
2SBKD
E
PDE
J GRAY McCALLISTER, III
SUSAN M McCALLISTER
RETAIN
CHASE AVE
15' BST
30" RCP
30" CM
12" CONC
18" CONC
OTHER END UNKNOWN
19
13 TONS
CLASS I RIP-RAP
30 YD F.F.²
SITE 1
BEGIN JS
PLAN VIEW
BAPTIST HERTIAGE CHURCH
OF CHAPEL HILL
DB 4226 PG 83
10
LEGEND
TS TS
DENOTES TEMPORARY IMPACTS IN SURFACE WATER
NCDOT
DIVISION OF HIGHWAYS
ORANGE COUNTY
PROJECT: 34762.1.1 (U-0624)
NC 86 (SOUTH COLUMBIA STREET)
FROM SR 1906 (PUREFOY ROAD)
TO SR 1902 (MANNING DRIVE)
SHEET 3 OF 8

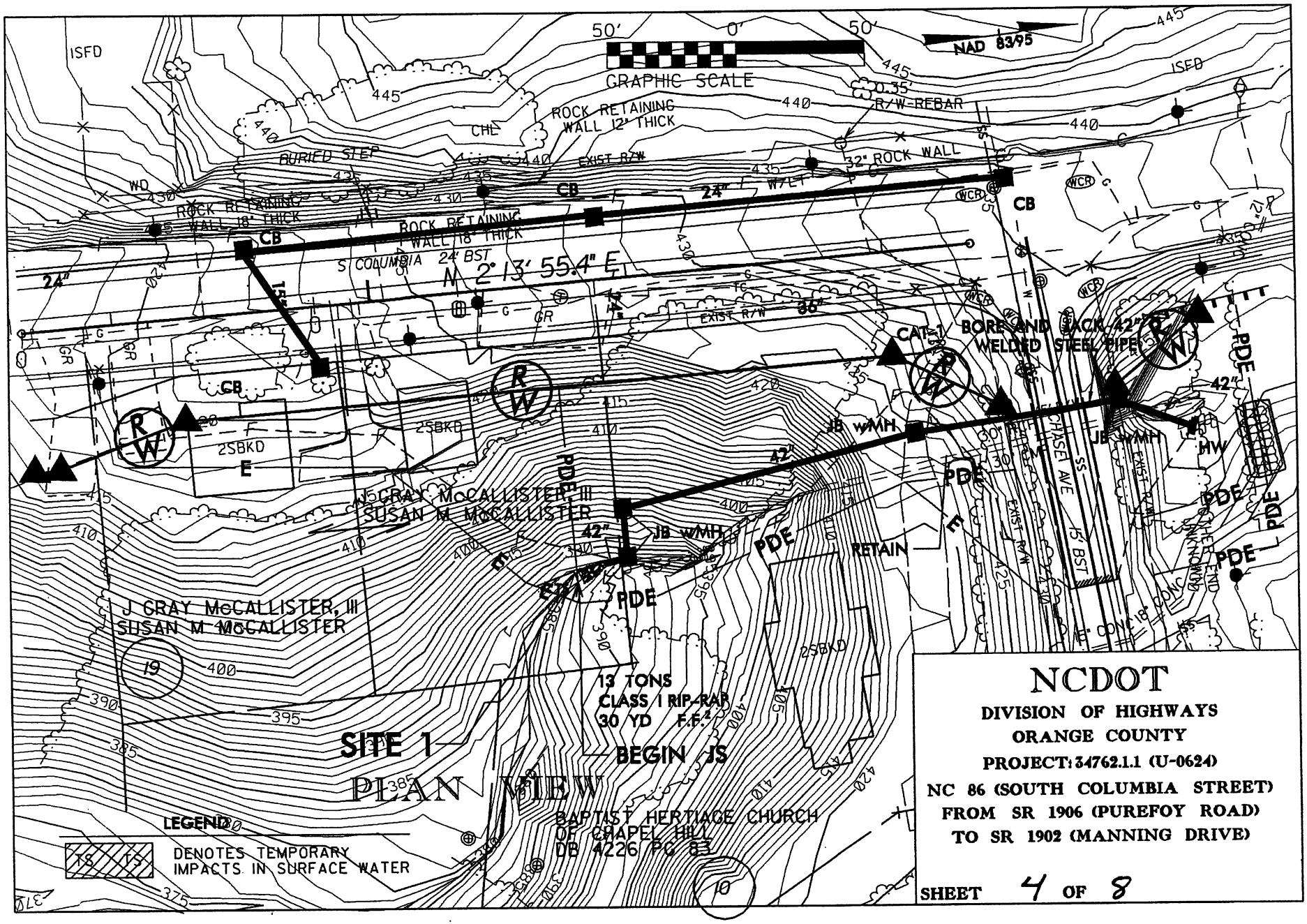
GRAPHIC SCALE
50' 0' 50'
NAD 83/95
ISFD
ROCK RETAINING WALL 12" THICK
BURIED STEP
EXIST R/W
32" ROCK WALL
ROCK RETAINING WALL 18" THICK
S COLUMBIA 24' BST
N 2° 13' 55.4" E
CB
24"
36"
CAT-1
BORE AND JACK 42" WELDED STEEL PIPE
JB w/MH
42"
PDE
RETAIN
CHASEL AVE
15' BST
J GRAY McCALLISTER, III
SUSAN M McCALLISTER
13 TONS
CLASS I RIP-RAP
30 YD F.F.²
BEGIN JS
SITE 1
PLAN VIEW
BAPTIST HERTIAGE CHURCH
OF CHAPEL HILL
DB 4226 PG 83
LEGEND
DENOTES TEMPORARY IMPACTS IN SURFACE WATER
NCDOT
DIVISION OF HIGHWAYS
ORANGE COUNTY
PROJECT: 34762.1.1 (U-0624)
NC 86 (SOUTH COLUMBIA STREET)
FROM SR 1906 (PUREFOY ROAD)
TO SR 1902 (MANNING DRIVE)
SHEET 4 OF 8

WETLAND PERMIT IMPACT SUMMARY

			WETLAND IMPACTS					SURFACE WATER IMPACTS				
Site No.	Station (From/To)	Structure Size / Type	Permanent Fill In Wetlands (ac)	Temp. Fill In Wetlands (ac)	Excavation in Wetlands (ac)	Mechanized Clearing in Wetlands (ac)	Hand Clearing in Wetlands (ac)	Permanent SW impacts (ac)	Temp. SW impacts (ac)	Existing Channel Impacts Permanent (ft)	Existing Channel Impacts Temp. (ft)	Natural Stream Design (ft)
1	25+50 -L- 118' RT.	BANK STABILIZATION							<0.01		10	
TOTALS:									<0.01		10	

NC DEPARTMENT OF TRANSPORTATION
DIVISION OF HIGHWAYS

ORANGE COUNTY
WBS - 34762.1.1 (U-0624)

SHEET 5 of 8 9/4/2008

ATN Revised 3/31/05

CONTRACT:

TIP PROJECT: U-0624

See Sheet 1-A For Index of Sheets
See Sheet 1-B For Conventional Symbols
See Sheet 1-C For Survey Control Data

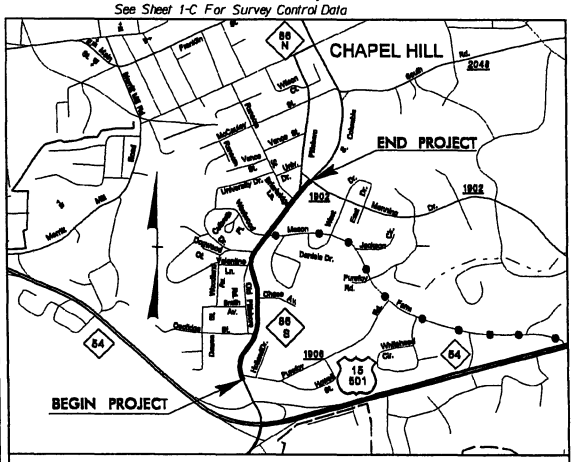

VICINITY MAP

DETOUR SBL TRAFFIC

STATE OF NORTH CAROLINA
DIVISION OF HIGHWAYS

ORANGE COUNTY

LOCATION: NC 86 (SOUTH COLUMBIA STREET) FROM SR 1906 (PUREFOY ROAD) TO SR 1902 (MANNING DRIVE) IN CHAPEL HILL

TYPE OF WORK: GRADING, DRAINAGE, PAVING, CURB & GUTTER, AND SIGNALS

STATE	STATE PROJECT REFERENCE NO.	SHEET NO.	TOTAL SHEETS
N.C.	U-0624	1	

STATE PROJ.NO.	F.A.PROJ.NO.	DESCRIPTION
34762.1.1	STP-86(2)	PE
34762.2.2	STP-0086(2)	R/W & UTIL

Permit Drawing Sheet ___ of ___

PERMIT

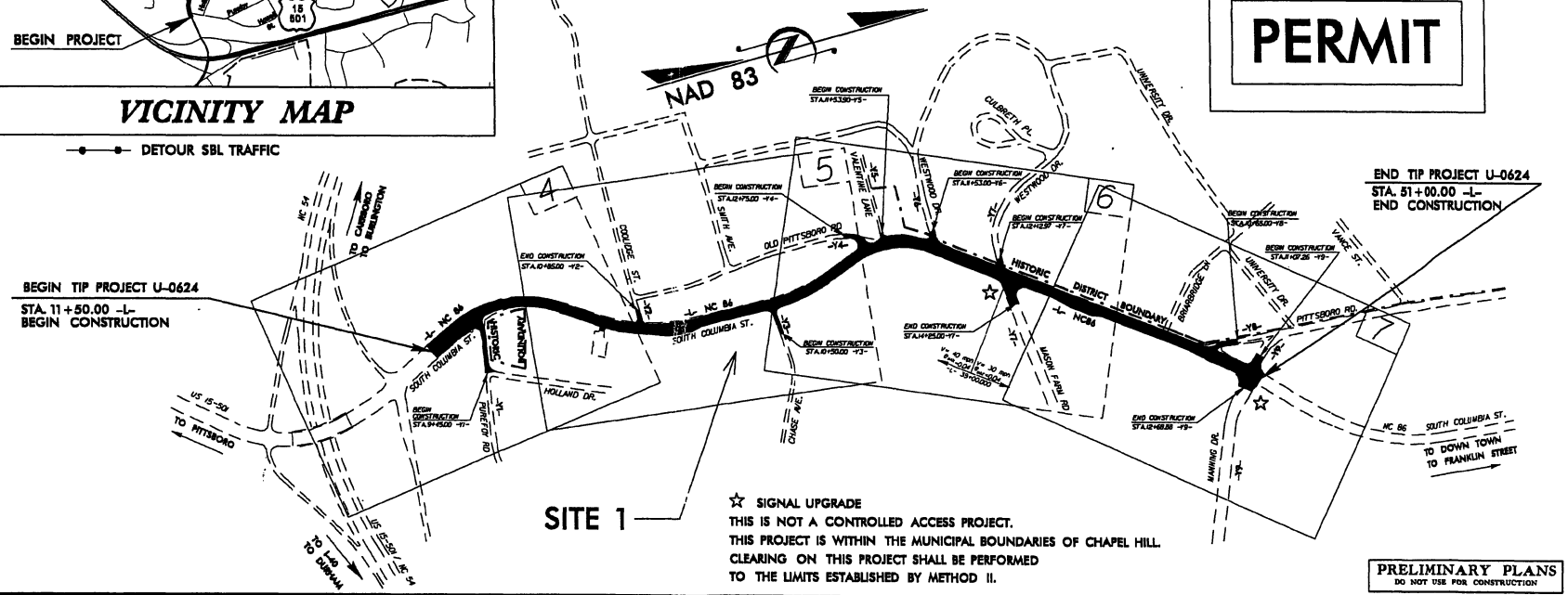

☆ SIGNAL UPGRADE
THIS IS NOT A CONTROLLED ACCESS PROJECT.
THIS PROJECT IS WITHIN THE MUNICIPAL BOUNDARIES OF CHAPEL HILL.
CLEARING ON THIS PROJECT SHALL BE PERFORMED TO THE LIMITS ESTABLISHED BY METHOD II.

PRELIMINARY PLANS
DO NOT USE FOR CONSTRUCTION

GRAPHIC SCALES

PLANS 50 25 0 50 100
PROFILE (HORIZONTAL) 50 25 0 50 100
PROFILE (VERTICAL) 10 5 0 10 20

DESIGN DATA

ADT 2005 = 19,200
ADT 2030 = 31,000
DHV = 10 %
D = 75 %
T = 5 % *
V = 40 /30 MPH
FUNC. CLASS = URBAN COLL
* TTST 1% DUAL 4%

PROJECT LENGTH

LENGTH ROADWAY TIP PROJECT U-0624 = 0.763 MI
TOTAL LENGTH TIP PROJECT U-0624 = 0.763 MI

Prepared in the Office of:
DIVISION OF HIGHWAYS
1000 Birch Ridge Dr., Raleigh NC, 27610

2006 STANDARD SPECIFICATIONS

RIGHT OF WAY DATE: AUGUST 20, 2007

LETTING DATE: JULY 21, 2009

JASON MOORE, PE
PROJECT ENGINEER

KEVIN E. MOORE, PE
PROJECT DESIGN ENGINEER

HYDRAULICS ENGINEER

SIGNATURE: P.E.

ROADWAY DESIGN ENGINEER

SIGNATURE: P.E.

DIVISION OF HIGHWAYS STATE OF NORTH CAROLINA

STATE HIGHWAY DESIGN ENGINEER P.E.

03-SEP-2008 14:58
c:\projects\permits_environmental\drawings\u0624_hyd_prm_wet.dgn
ameadows
ALT HY244562

P-34

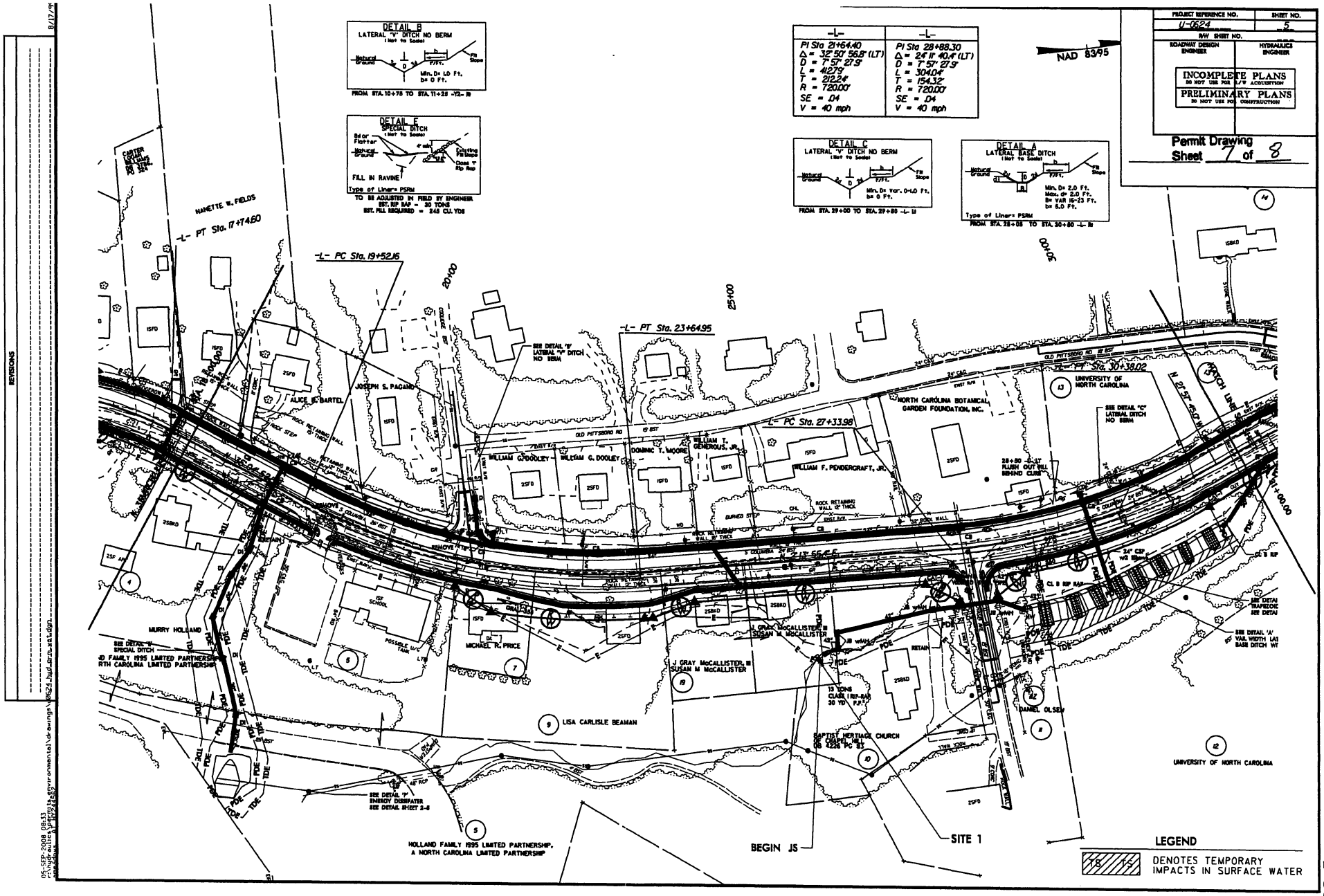

PROJECT REFERENCE NO.
U-0624
SHEET NO.
5
R/W SHEET NO.
ROADWAY DESIGN ENGINEER
HYDRAULICS ENGINEER
INCOMPLETE PLANS
DO NOT USE FOR R/W ACQUISITION
PRELIMINARY PLANS
DO NOT USE FOR CONSTRUCTION
Permit Drawing
Sheet 7 of 8
NAD 83/95
-L-
PI Sta 21+64.40
Δ = 32° 50' 56.8" (LT)
D = 7° 57' 27.9"
L = 412.79'
T = 212.24'
R = 720.00'
SE = .04
V = 40 mph
-L-
PI Sta 28+88.30
Δ = 24° 11' 40.4" (LT)
D = 7° 57' 27.9"
L = 304.04'
T = 154.32'
R = 720.00'
SE = .04
V = 40 mph
DETAIL B
LATERAL 'V' DITCH NO BERM
(Not to Scale)
Min. D= 1.0 Ft.
b= 0 Ft.
FROM STA. 10+75 TO STA. 11+25 -Y2- RI
DETAIL E
SPECIAL DITCH
(Not to Scale)
FILL IN RAVINE
Type of Liner= PSRM
TO BE ADJUSTED IN FIELD BY ENGINEER
EST. RIP RAP = 30 TONS
EST. FILL REQUIRED = 245 CU. YDS
DETAIL C
LATERAL 'V' DITCH NO BERM
(Not to Scale)
Min. D= Var. 0-1.0 Ft.
b= 0 Ft.
FROM STA. 29+00 TO STA. 29+80 -L- LI
DETAIL A
LATERAL BASE DITCH
(Not to Scale)
Min. D= 2.0 Ft.
Max. d= 2.0 Ft.
B= VAR 16-23 Ft.
b= 5.0 Ft.
Type of Liner= PSRM
FROM STA. 28+05 TO STA. 30+80 -L- RI
NANETTE W. FIELDS
-L- PT Sta. 17+74.60
-L- PC Sta. 19+52.16
-L- PT Sta. 23+64.95
-L- PC Sta. 27+33.98
-L- PT Sta. 30+38.02
20+00
25+00
30+00
SEE DETAIL 'B' LATERAL 'V' DITCH NO BERM
JOSEPH S. PAGANO
ALICE B. BARTEL
WILLIAM G. DOOLEY
DOMINIC T. MOORE
WILLIAM T. GENEROUS, JR.
WILLIAM F. PENDERGRAFT, JR.
NORTH CAROLINA BOTANICAL GARDEN FOUNDATION, INC.
UNIVERSITY OF NORTH CAROLINA
SEE DETAIL "C" LATERAL DITCH NO BERM
MURRY HOLLAND
SEE DETAIL 'B' SPECIAL DITCH
MICHAEL R. PRICE
J GRAY McCALLISTER, III
SUSAN M McCALLISTER
LISA CARLISLE BEAMAN
BAPTIST HERITAGE CHURCH OF CHAPEL HILL
DANIEL OLSEN
UNIVERSITY OF NORTH CAROLINA
SEE DETAIL 'F' ENERGY DISSIPATER SEE DETAIL SHEET 2-6
HOLLAND FAMILY 1995 LIMITED PARTNERSHIP, A NORTH CAROLINA LIMITED PARTNERSHIP
BEGIN JS
SITE 1
LEGEND
DENOTES TEMPORARY IMPACTS IN SURFACE WATER
REVISIONS
05-SEP-2008 08:33

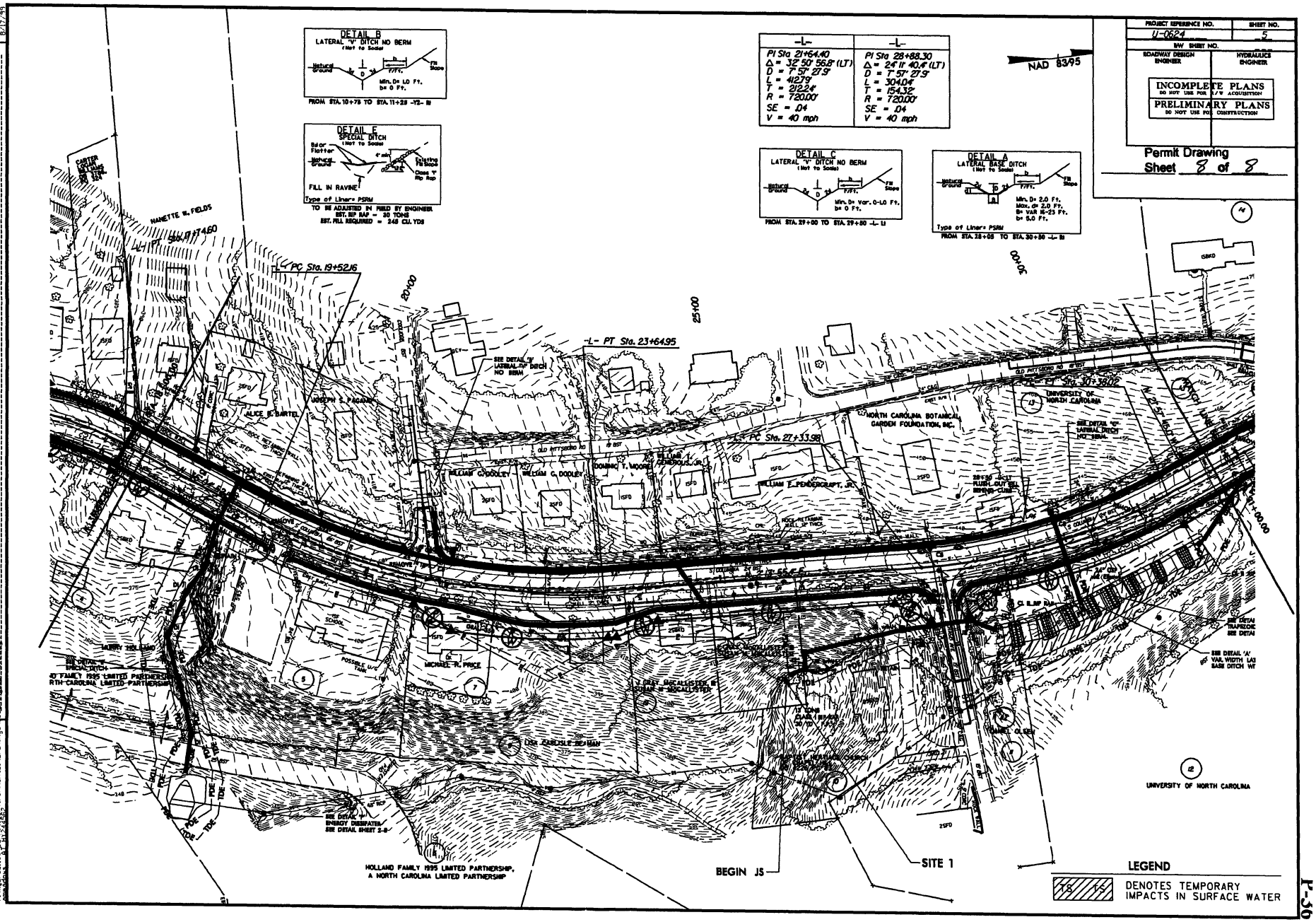

PROJECT REFERENCE NO.
U-0624
SHEET NO.
5
R/W SHEET NO.
ROADWAY DESIGN ENGINEER
HYDRAULICS ENGINEER
INCOMPLETE PLANS
DO NOT USE FOR R/W ACQUISITION
PRELIMINARY PLANS
DO NOT USE FOR CONSTRUCTION
Permit Drawing
Sheet 8 of 8
NAD 83/95
-L-
PI Sta 21+64.40
Δ = 32° 50' 56.8" (LT)
D = 7° 57' 27.9"
L = 412.79'
T = 212.24'
R = 720.00'
SE = .04
V = 40 mph
-L-
PI Sta 28+88.30
Δ = 24° 11' 40.4" (LT)
D = 7° 57' 27.9"
L = 304.04'
T = 154.32'
R = 720.00'
SE = .04
V = 40 mph
DETAIL B
LATERAL 'V' DITCH NO BERM
(Not to Scale)
Min. D= 1.0 Ft.
b= 0 Ft.
FROM STA. 10+75 TO STA. 11+25 -Y2- Rt
DETAIL E
SPECIAL DITCH
(Not to Scale)
FILL IN RAVINE
Type of Liner= PSRM
TO BE ADJUSTED IN FIELD BY ENGINEER
EST. RIP RAP = 30 TONS
EST. FILL REQUIRED = 245 CU. YDS
DETAIL C
LATERAL 'V' DITCH NO BERM
(Not to Scale)
Min. D= Var. 0-1.0 Ft.
b= 0 Ft.
FROM STA. 29+00 TO STA. 29+50 -L- Lt
DETAIL A
LATERAL BASE DITCH
(Not to Scale)
Min. D= 2.0 Ft.
Max. d= 2.0 Ft.
B= VAR 16-23 Ft.
b= 5.0 Ft.
Type of Liner= PSRM
FROM STA. 28+05 TO STA. 30+50 -L- Rt
NANETTE W. FIELDS
-L- PT Sta. 17+74.60
-L- PC Sta. 19+52.16
-L- PT Sta. 23+64.95
-L- PC Sta. 27+33.98
-L- PT Sta. 30+38.02
20+00
25+00
30+00
ALICE E. BARTEL
JOSEPH S. PAGANO
WILLIAM G. DOODLEY
DOMINIC T. MOORE
WILLIAM F. PENDERGRAFT, JR.
NORTH CAROLINA BOTANICAL GARDEN FOUNDATION, INC.
UNIVERSITY OF NORTH CAROLINA
MICHAEL R. PRICE
LISA CARLISLE BEAMAN
HOLLAND FAMILY 1995 LIMITED PARTNERSHIP, A NORTH CAROLINA LIMITED PARTNERSHIP
BEGIN JS
SITE 1
UNIVERSITY OF NORTH CAROLINA
LEGEND
DENOTES TEMPORARY IMPACTS IN SURFACE WATER
REVISIONS
8/17/99
05-SEP-2008 08:34

STANDARD SPECIAL PROVISION
AVAILABILITY OF FUNDS – TERMINATION OF CONTRACTS

(5-20-08) Z-2

General Statute 143C-6-11. (h) Highway Appropriation is hereby incorporated verbatim in this contract as follows:

(h) Amounts Encumbered. – Transportation project appropriations may be encumbered in the amount of allotments made to the Department of Transportation by the Director for the estimated payments for transportation project contract work to be performed in the appropriation fiscal year. The allotments shall be multiyear allotments and shall be based on estimated revenues and shall be subject to the maximum contract authority contained in *General Statute 143C-6-11(c)*. Payment for transportation project work performed pursuant to contract in any fiscal year other than the current fiscal year is subject to appropriations by the General Assembly. Transportation project contracts shall contain a schedule of estimated completion progress, and any acceleration of this progress shall be subject to the approval of the Department of Transportation provided funds are available. The State reserves the right to terminate or suspend any transportation project contract, and any transportation project contract shall be so terminated or suspended if funds will not be available for payment of the work to be performed during that fiscal year pursuant to the contract. In the event of termination of any contract, the contractor shall be given a written notice of termination at least 60 days before completion of scheduled work for which funds are available. In the event of termination, the contractor shall be paid for the work already performed in accordance with the contract specifications.

Payment will be made on any contract terminated pursuant to the special provision in accordance with Subarticle 108-13(E) of the *2012 Standard Specifications*.

STANDARD SPECIAL PROVISION
NCDOT GENERAL SEED SPECIFICATION FOR SEED QUALITY

(5-17-11) Z-3

Seed shall be sampled and tested by the North Carolina Department of Agriculture and Consumer Services, Seed Testing Laboratory. When said samples are collected, the vendor shall supply an independent laboratory report for each lot to be tested. Results from seed so sampled shall be final. Seed not meeting the specifications shall be rejected by the Department of Transportation and shall not be delivered to North Carolina Department of Transportation warehouses. If seed has been delivered it shall be available for pickup and replacement at the supplier's expense.

Any re-labeling required by the North Carolina Department of Agriculture and Consumer Services, Seed Testing Laboratory, that would cause the label to reflect as otherwise specified herein shall be rejected by the North Carolina Department of Transportation.

Seed shall be free from seeds of the noxious weeds Johnsongrass, Balloonvine, Jimsonweed, Witchweed, Itchgrass, Serrated Tussock, Showy Crotalaria, Smooth Crotalaria, Sicklepod, Sandbur, Wild Onion, and Wild Garlic. Seed shall not be labeled with the above weed species on the seed analysis label. Tolerances as applied by the Association of Official Seed Analysts will NOT be allowed for the above noxious weeds except for Wild Onion and Wild Garlic.

Tolerances established by the Association of Official Seed Analysts will generally be recognized. However, for the purpose of figuring pure live seed, the found pure seed and found germination percentages as reported by the North Carolina Department of Agriculture and Consumer Services, Seed Testing Laboratory will be used. Allowances, as established by the NCDOT, will be recognized for minimum pure live seed as listed on the following pages.

The specifications for restricted noxious weed seed refers to the number per pound as follows:

Restricted Noxious **Weed**	Limitations per Lb. Of Seed	Restricted Noxious **Weed**	Limitations per Lb. of Seed
Blessed Thistle	4 seeds	Cornflower (Ragged Robin)	27 seeds
Cocklebur	4 seeds	Texas Panicum	27 seeds
Spurred Anoda	4 seeds	Bracted Plantain	54 seeds
Velvetleaf	4 seeds	Buckhorn Plantain	54 seeds
Morning-glory	8 seeds	Broadleaf Dock	54 seeds
Corn Cockle	10 seeds	Curly Dock	54 seeds
Wild Radish	12 seeds	Dodder	54 seeds
Purple Nutsedge	27 seeds	Giant Foxtail	54 seeds
Yellow Nutsedge	27 seeds	Horsenettle	54 seeds
Canada Thistle	27 seeds	Quackgrass	54 seeds
Field Bindweed	27 seeds	Wild Mustard	54 seeds
Hedge Bindweed	27 seeds		

Seed of Pensacola Bahiagrass shall not contain more than 7% inert matter, Kentucky Bluegrass, Centipede and Fine or Hard Fescue shall not contain more than 5% inert matter whereas a maximum of 2% inert matter will be allowed on all other kinds of seed. In addition, all seed shall not contain more than 2% other crop seed nor more than 1% total weed seed. The germination rate as tested by the North Carolina Department of Agriculture shall not fall below 70%, which includes both dormant and hard seed. Seed shall be labeled with not more than 7%, 5% or 2% inert matter (according to above specifications), 2% other crop seed and 1% total weed seed.

Exceptions may be made for minimum pure live seed allowances when cases of seed variety shortages are verified. Pure live seed percentages will be applied in a verified shortage situation. Those purchase orders of deficient seed lots will be credited with the percentage that the seed is deficient.

FURTHER SPECIFICATIONS FOR EACH SEED GROUP ARE GIVEN BELOW:

Minimum 85% pure live seed; maximum 1% total weed seed; maximum 2% total other crop seed; maximum 144 restricted noxious weed seed per pound. Seed less than 83% pure live seed will not be approved.

Sericea Lespedeza
Oats (seeds)

Minimum 80% pure live seed; maximum 1% total weed seed; maximum 2% total other crop; maximum 144 restricted noxious weed seed per pound. Seed less than 78% pure live seed will not be approved.

Tall Fescue (all approved varieties)
Kobe Lespedeza
Korean Lespedeza
Weeping Lovegrass
Carpetgrass
Bermudagrass
Browntop Millet
German Millet – Strain R
Clover – Red/White/Crimson

Minimum 78% pure live seed; maximum 1% total weed seed; maximum 2% total other crop seed; maximum 144 restricted noxious weed seed per pound. Seed less than 76% pure live seed will not be approved.

Common or Sweet Sundangrass

Minimum 76% pure live seed; maximum 1% total weed seed; maximum 2% total other crop seed; maximum 144 restricted noxious weed seed per pound. Seed less than 74% pure live seed will not be approved.

Rye (grain; all varieties)
Kentucky Bluegrass (all approved varieties)
Hard Fescue (all approved varieties)
Shrub (bicolor) Lespedeza

Minimum 70% pure live seed; maximum 1% total weed seed; maximum 2% total other crop seed; maximum 144 noxious weed seed per pound. Seed less than 70% pure live seed will not be approved.

Centipedegrass
Crownvetch
Pensacola Bahiagrass
Creeping Red Fescue
Japanese Millet
Reed Canary Grass
Zoysia

Minimum 70% pure live seed; maximum 1% total weed seed; maximum 2% total other crop seed; maximum 5% inert matter; maximum 144 restricted noxious weed seed per pound.

Barnyard Grass
Big Bluestem
Little Bluestem
Bristly Locust
Birdsfoot Trefoil
Indiangrass
Orchardgrass
Switchgrass
Yellow Blossom Sweet Clover

STANDARD SPECIAL PROVISION

ERRATA

(1-17-12) (Rev. 9-18-12) Z-4

Revise the *2012 Standard Specifications* as follows:

Division 2

Page 2-7, line 31, Article 215-2 Construction Methods, replace "Article 107-26" with "Article 107-25".

Page 2-17, Article 226-3, Measurement and Payment, line 2, delete "pipe culverts,".

Page 2-20, Subarticle 230-4(B), Contractor Furnished Sources, change references as follows: Line 1, replace "(4) Buffer Zone" with "(c) Buffer Zone"; **Line 12,** replace "(5) Evaluation for Potential Wetlands and Endangered Species" with "(d) Evaluation for Potential Wetlands and Endangered Species"; and **Line 33,** replace "(6) Approval" with "(4) Approval".

Division 4

Page 4-77, line 27, Subarticle 452-3(C) Concrete Coping, replace "sheet pile" with "reinforcement".

Division 6

Page 6-7, line 31, Article 609-3 Field Verification of Mixture and Job Mix Formula Adjustments, replace "30" with "45".

Page 6-10, line 42, Subarticle 609-6(C)(2), replace "Subarticle 609-6(E)" with "Subarticle 609-6(D)".

Page 6-11, Table 609-1 Control Limits, replace "Max. Spec. Limit" for the Target Source of $P_{0.075}/P_{be}$ Ratio with "1.0".

Page 6-40, Article 650-2 Materials, replace "Subarticle 1012-1(F)" with "Subarticle 1012-1(E)"

Division 10

Page 10-74, Table 1056-1 Geotextile Requirements, replace "50%" for the UV Stability (Retained Strength) of Type 5 geotextiles with "70%".

Division 12

Page 12-7, Table 1205-3, add "FOR THERMOPLASTIC" to the end of the title.

Page 12-8, Subarticle 1205-5(B), line 13, replace "Table 1205-2" with "Table 1205-4".

Page 12-8, Table 1205-4 and 1205-5, replace "THERMOPLASTIC" in the title of these tables with "POLYUREA".

Page 12-9, Subarticle 1205-6(B), line 21, replace "Table 1205-4" with "Table 1205-6".

Page 12-11, Subarticle 1205-8(C), line 25, replace "Table 1205-5" with "Table 1205-7".

Division 15

Page 15-6, Subarticle 1510-3(B), after line 21, replace the allowable leakage formula with the following: $W = LD\sqrt{P} \div 148,000$

Page 15-6, Subarticle 1510-3(B), line 32, delete "may be performed concurrently or" and replace with "shall be performed".

Page 15-17, Subarticle 1540-3(E), line 27, delete "Type 1".

Division 17

Page 17-26, line 42, Subarticle 1731-3(D) Termination and Splicing within Interconnect Center, delete this subarticle.

Revise the *2012 Roadway Standard Drawings* as follows:

1633.01 Sheet 1 of 1, English Standard Drawing for Matting Installation, replace "1633.01" with "1631.01".

STANDARD SPECIAL PROVISION

PLANT AND PEST QUARANTINES
(Imported Fire Ant, Gypsy Moth, Witchweed, And Other Noxious Weeds)

(3-18-03) Z-04a

Within Quarantined Area

This project may be within a county regulated for plant and/or pests. If the project or any part of the Contractor's operations is located within a quarantined area, thoroughly clean all equipment prior to moving out of the quarantined area. Comply with federal/state regulations by obtaining a certificate or limited permit for any regulated article moving from the quarantined area.

Originating in a Quarantined County

Obtain a certificate or limited permit issued by the N.C. Department of Agriculture/United States Department of Agriculture. Have the certificate or limited permit accompany the article when it arrives at the project site.

Contact

Contact the N.C. Department of Agriculture/United States Department of Agriculture at 1-800-206-9333, 919-733-6932, or *http://www.ncagr.com/plantind/* to determine those specific project sites located in the quarantined area or for any regulated article used on this project originating in a quarantined county.

Regulated Articles Include

1. Soil, sand, gravel, compost, peat, humus, muck, and decomposed manure, separately or with other articles. This includes movement of articles listed above that may be associated with cut/waste, ditch pulling, and shoulder cutting.
2. Plants with roots including grass sod.
3. Plant crowns and roots.
4. Bulbs, corms, rhizomes, and tubers of ornamental plants.
5. Hay, straw, fodder, and plant litter of any kind.
6. Clearing and grubbing debris.
7. Used agricultural cultivating and harvesting equipment.
8. Used earth-moving equipment.
9. Any other products, articles, or means of conveyance, of any character, if determined by an inspector to present a hazard of spreading imported fire ant, gypsy moth, witchweed or other noxious weeds.

STANDARD SPECIAL PROVISION

AWARD OF CONTRACT

(6-28-77) Z-6

"The North Carolina Department of Transportation, in accordance with the provisions of *Title VI of the Civil Rights Act of 1964* (78 Stat. 252) and the Regulations of the Department of Transportation (*49 C.F.R., Part 21*), issued pursuant to such act, hereby notifies all bidders that it will affirmatively insure that the contract entered into pursuant to this advertisement will be awarded to the lowest responsible bidder without discrimination on the ground of race, color, or national origin".

STANDARD SPECIAL PROVISION

MINORITY AND FEMALE EMPLOYMENT REQUIREMENTS

Z-7

NOTICE OF REQUIREMENTS FOR AFFIRMATIVE ACTION TO ENSURE EQUAL EMPLOYMENT OPPORTUNITY (*EXECUTIVE NUMBER 11246*)

1. The goals and timetables for minority and female participation, expressed in percentage terms for the Contractor's aggregate workforce in each trade on all construction work in the covered area, see as shown on the attached sheet entitled "Employment Goals for Minority and Female participation".

These goals are applicable to all the Contractor's construction work (whether or not it is Federal or federally assisted) performed in the covered area. If the Contractor performs construction work in a geographical area located outside of the covered area, it shall apply the goals established for such geographical area where the work is actually performed. With regard to this second area, the Contractor also is subject to the goals for both its federally involved and nonfederally involved construction.

The Contractor's compliance with the Executive Order and the regulations in *41 CFR Part 60-4* shall be based on its implementation of the Equal Opportunity Clause, specific affirmative action obligations required by the specifications set forth in *41 CFR 60-4.3(a)*, and its effort to meet the goals. The hours of minority and female employment and training must be substantially uniform throughout the length of the contract, and in each trade and the Contractor shall make a good faith effort to employ minorities and women evenly on each of its projects. The transfer of minority or female employees or trainees from Contractor to Contractor or from project to project or the sole purpose of meeting the Contractor's goals shall be a violation of the contract, the executive Order and the regulations *in 41 CFR Part 60-4*. Compliance with the goals will be measured against the total work hours performed.

2. As used in this Notice and in the contract resulting from this solicitation, the "covered area" is the county or counties shown on the cover sheet of the proposal form and contract.

EMPLOYMENT GOALS FOR MINORITY AND FEMALE PARTICIPATION

Economic Areas

Area 023 29.7%
Bertie County
Camden County
Chowan County
Gates County
Hertford County
Pasquotank County
Perquimans County

Area 024 31.7%
Beaufort County
Carteret County
Craven County
Dare County
Edgecombe County
Green County
Halifax County
Hyde County
Jones County
Lenoir County
Martin County
Nash County
Northampton County
Pamlico County
Pitt County
Tyrrell County
Washington County
Wayne County
Wilson County

Area 025 23.5%
Columbus County
Duplin County
Onslow County
Pender County

Area 026 33.5%
Bladen County
Hoke County
Richmond County
Robeson County
Sampson County
Scotland County

Area 027 24.7%
Chatham County
Franklin County
Granville County
Harnett County
Johnston County
Lee County
Person County
Vance County
Warren County

Area 028 15.5%
Alleghany County
Ashe County
Caswell County
Davie County
Montgomery County
Moore County
Rockingham County
Surry County
Watauga County
Wilkes County

Area 029 15.7%
Alexander County
Anson County
Burke County
Cabarrus County
Caldwell County
Catawba County
Cleveland County
Iredell County
Lincoln County
Polk County
Rowan County
Rutherford County
Stanly County

Area 0480 8.5%
Buncombe County
Madison County

Area 030 6.3%
Avery County
Cherokee County
Clay County
Graham County
Haywood County
Henderson County
Jackson County
McDowell County
Macon County
Mitchell County
Swain County
Transylvania County
Yancey County

SMSA Areas

Area 5720 26.6%
Currituck County

Area 9200 20.7%
Brunswick County
New Hanover County

Area 2560 24.2%
Cumberland County

Area 6640 22.8%
Durham County
Orange County
Wake County

Area 1300 16.2%
Alamance County

Area 3120 16.4%
Davidson County
Forsyth County
Guilford County
Randolph County
Stokes County
Yadkin County

Area 1520 18.3%
Gaston County
Mecklenburg County
Union County

Goals for Female

Participation in Each Trade

(Statewide) 6.9%

STANDARD SPECIAL PROVISION

REQUIRED CONTRACT PROVISIONS FEDERAL - AID CONSTRUCTION CONTRACTS

FHWA - 1273 Electronic Version - May 1, 2012 Z-8

I. General
II. Nondiscrimination
III. Nonsegregated Facilities
IV. Davis-Bacon and Related Act Provisions
V. Contract Work Hours and Safety Standards Act Provisions
VI. Subletting or Assigning the Contract
VII. Safety: Accident Prevention
VIII. False Statements Concerning Highway Projects
IX. Implementation of Clean Air Act and Federal Water Pollution Control Act
X. Compliance with Governmentwide Suspension and Debarment Requirements
XI. Certification Regarding Use of Contract Funds for Lobbying

ATTACHMENTS

A. Employment and Materials Preference for Appalachian Development Highway System or Appalachian Local Access Road Contracts (included in Appalachian contracts only)

I. GENERAL

1. Form FHWA-1273 must be physically incorporated in each construction contract funded under Title 23 (excluding emergency contracts solely intended for debris removal). The contractor (or subcontractor) must insert this form in each subcontract and further require its inclusion in all lower tier subcontracts (excluding purchase orders, rental agreements and other agreements for supplies or services).

   The applicable requirements of Form FHWA-1273 are incorporated by reference for work done under any purchase order, rental agreement or agreement for other services. The prime contractor shall be responsible for compliance by any subcontractor, lower-tier subcontractor or service provider.

   Form FHWA-1273 must be included in all Federal-aid design-build contracts, in all subcontracts and in lower tier subcontracts (excluding subcontracts for design services, purchase orders, rental agreements and other agreements for supplies or services). The design-builder shall be responsible for compliance by any subcontractor, lower-tier subcontractor or service provider.

   Contracting agencies may reference Form FHWA-1273 in bid proposal or request for proposal documents, however, the Form FHWA-1273 must be physically incorporated (not referenced) in all contracts, subcontracts and lower-tier subcontracts (excluding purchase orders, rental agreements and other agreements for supplies or services related to a construction contract).
2. Subject to the applicability criteria noted in the following sections, these contract provisions shall apply to all work performed on the contract by the contractor's own organization and with the assistance of workers under the contractor's immediate superintendence and to all work performed on the contract by piecework, station work, or by subcontract.
3. A breach of any of the stipulations contained in these Required Contract Provisions may be sufficient grounds for withholding of progress payments, withholding of final payment, termination of the contract, suspension / debarment or any other action determined to be appropriate by the contracting agency and FHWA.
4. Selection of Labor: During the performance of this contract, the contractor shall not use convict labor for any purpose within the limits of a construction project on a Federal-aid highway unless it is labor performed by convicts who are on parole, supervised release, or probation. The term Federal-aid highway does not include roadways functionally classified as local roads or rural minor collectors.

II. NONDISCRIMINATION

The provisions of this section related to 23 CFR Part 230 are applicable to all Federal-aid construction contracts and to all related construction subcontracts of $10,000 or more. The provisions of 23 CFR Part 230 are not applicable to material supply, engineering, or architectural service contracts.

In addition, the contractor and all subcontractors must comply with the following policies: Executive Order 11246, 41 CFR 60, 29 CFR 1625-1627, Title 23 USC Section 140, the Rehabilitation Act of 1973, as amended (29 USC 794), Title VI of the Civil Rights Act of 1964, as amended, and related regulations including 49 CFR Parts 21, 26 and 27; and 23 CFR Parts 200, 230, and 633.

The contractor and all subcontractors must comply with: the requirements of the Equal Opportunity Clause in 41 CFR 60-1.4(b) and, for all construction contracts exceeding $10,000, the Standard Federal Equal Employment Opportunity Construction Contract Specifications in 41 CFR 60-4.3.

Note: The U.S. Department of Labor has exclusive authority to determine compliance with Executive Order 11246 and the policies of the Secretary of Labor including 41 CFR 60, and 29 CFR 1625-1627. The contracting agency and the FHWA have the authority and the responsibility to ensure compliance with Title 23 USC Section 140, the Rehabilitation Act of 1973, as amended (29 USC 794), and Title VI of the Civil Rights Act of 1964, as amended, and related regulations including 49 CFR Parts 21, 26 and 27; and 23 CFR Parts 200, 230, and 633.

The following provision is adopted from 23 CFR 230, Appendix A, with appropriate revisions to conform to the U.S. Department of Labor (US DOL) and FHWA requirements.

1. **Equal Employment Opportunity:** Equal employment opportunity (EEO) requirements not to discriminate and to take affirmative action to assure equal opportunity as set forth under laws, executive orders, rules, regulations (28 CFR 35, 29 CFR 1630, 29 CFR 1625-1627, 41 CFR 60 and 49 CFR 27) and orders of the Secretary of Labor as modified by the provisions prescribed herein, and imposed pursuant to 23 U.S.C. 140 shall constitute the EEO and specific affirmative action standards for the contractor's project activities under this contract. The provisions of the Americans with Disabilities Act of 1990 (42 U.S.C. 12101 et seq.) set forth under 28 CFR 35 and 29 CFR 1630 are

incorporated by reference in this contract. In the execution of this contract, the contractor agrees to comply with the following minimum specific requirement activities of EEO:

a. The contractor will work with the contracting agency and the Federal Government to ensure that it has made every good faith effort to provide equal opportunity with respect to all of its terms and conditions of employment and in their review of activities under the contract.
b. The contractor will accept as its operating policy the following statement:
"It is the policy of this Company to assure that applicants are employed, and that employees are treated during employment, without regard to their race, religion, sex, color, national origin, age or disability. Such action shall include: employment, upgrading, demotion, or transfer; recruitment or recruitment advertising; layoff or termination; rates of pay or other forms of compensation; and selection for training, including apprenticeship, pre-apprenticeship, and/or on-the-job training."

2. **EEO Officer:** The contractor will designate and make known to the contracting officers an EEO Officer who will have the responsibility for and must be capable of effectively administering and promoting an active EEO program and who must be assigned adequate authority and responsibility to do so.
3. **Dissemination of Policy:** All members of the contractor's staff who are authorized to hire, supervise, promote, and discharge employees, or who recommend such action, or who are substantially involved in such action, will be made fully cognizant of, and will implement, the contractor's EEO policy and contractual responsibilities to provide EEO in each grade and classification of employment. To ensure that the above agreement will be met, the following actions will be taken as a minimum:
   a. Periodic meetings of supervisory and personnel office employees will be conducted before the start of work and then not less often than once every six months, at which time the contractor's EEO policy and its implementation will be reviewed and explained. The meetings will be conducted by the EEO Officer.
   b. All new supervisory or personnel office employees will be given a thorough indoctrination by the EEO Officer, covering all major aspects of the contractor's EEO obligations within thirty days following their reporting for duty with the contractor.
   c. All personnel who are engaged in direct recruitment for the project will be instructed by the EEO Officer in the contractor's procedures for locating and hiring minorities and women.
   d. Notices and posters setting forth the contractor's EEO policy will be placed in areas readily accessible to employees, applicants for employment and potential employees.
   e. The contractor's EEO policy and the procedures to implement such policy will be brought to the attention of employees by means of meetings, employee handbooks, or other appropriate means.
4. **Recruitment:** When advertising for employees, the contractor will include in all advertisements for employees the notation: "An Equal Opportunity Employer." All such advertisements will be placed in publications having a large circulation among minorities and women in the area from which the project work force would normally be derived.
   a. The contractor will, unless precluded by a valid bargaining agreement, conduct systematic and direct recruitment through public and private employee referral sources likely to yield qualified minorities and women. To meet this requirement, the contractor will identify sources of potential minority group employees, and establish with such identified sources procedures whereby minority and women applicants may be referred to the contractor for employment consideration.
   b. In the event the contractor has a valid bargaining agreement providing for exclusive hiring hall referrals, the contractor is expected to observe the provisions of that agreement to the extent that the system meets the contractor's compliance with EEO contract provisions. Where implementation of such an agreement has the effect of discriminating against minorities or women, or obligates the contractor to do the same, such implementation violates Federal nondiscrimination provisions.
   c. The contractor will encourage its present employees to refer minorities and women as applicants for employment. Information and procedures with regard to referring such applicants will be discussed with employees.
5. **Personnel Actions:** Wages, working conditions, and employee benefits shall be established and administered, and personnel actions of every type, including hiring, upgrading, promotion, transfer, demotion, layoff, and termination, shall be taken without regard to race, color, religion, sex, national origin, age or disability. The following procedures shall be followed:
   a. The contractor will conduct periodic inspections of project sites to insure that working conditions and employee facilities do not indicate discriminatory treatment of project site personnel.
   b. The contractor will periodically evaluate the spread of wages paid within each classification to determine any evidence of discriminatory wage practices.
   c. The contractor will periodically review selected personnel actions in depth to determine whether there is evidence of discrimination. Where evidence is found, the contractor will promptly take corrective action. If the review indicates that the discrimination may extend beyond the actions reviewed, such corrective action shall include all affected persons.
   d. The contractor will promptly investigate all complaints of alleged discrimination made to the contractor in connection with its obligations under this contract, will attempt to resolve such complaints, and will take appropriate corrective action within a reasonable time. If the investigation indicates that the discrimination may affect persons other than the complainant, such corrective action shall include such other persons. Upon completion of each investigation, the contractor will inform every complainant of all of their avenues of appeal.
6. **Training and Promotion:**
   a. The contractor will assist in locating, qualifying, and increasing the skills of minorities and women who are applicants for employment or current employees. Such efforts should be aimed at developing full journey level status employees in the type of trade or job classification involved.
   b. Consistent with the contractor's work force requirements and as permissible under Federal and State regulations, the contractor shall make full use of training programs, i.e., apprenticeship, and on-the-job training programs for the geographical area of contract performance. In the event a special provision for training is provided under this contract, this subparagraph will be superseded as indicated in the special provision. The contracting agency may reserve training positions for persons who receive welfare assistance in accordance with 23 U.S.C. 140(a).
   c The contractor will advise employees and applicants for employment of available training programs and entrance requirements for each.
   d. The contractor will periodically review the training and promotion potential of employees who are minorities and women and will encourage eligible employees to apply for such training and promotion.

7. **Unions:** If the contractor relies in whole or in part upon unions as a source of employees, the contractor will use good faith efforts to obtain the cooperation of such unions to increase opportunities for minorities and women. Actions by the contractor, either directly or through a contractor's association acting as agent, will include the procedures set forth below:
   a. The contractor will use good faith efforts to develop, in cooperation with the unions, joint training programs aimed toward qualifying more minorities and women for membership in the unions and increasing the skills of minorities and women so that they may qualify for higher paying employment.
   b. The contractor will use good faith efforts to incorporate an EEO clause into each union agreement to the end that such union will be contractually bound to refer applicants without regard to their race, color, religion, sex, national origin, age or disability.
   c. The contractor is to obtain information as to the referral practices and policies of the labor union except that to the extent such information is within the exclusive possession of the labor union and such labor union refuses to furnish such information to the contractor, the contractor shall so certify to the contracting agency and shall set forth what efforts have been made to obtain such information.
   d. In the event the union is unable to provide the contractor with a reasonable flow of referrals within the time limit set forth in the collective bargaining agreement, the contractor will, through independent recruitment efforts, fill the employment vacancies without regard to race, color, religion, sex, national origin, age or disability; making full efforts to obtain qualified and/or qualifiable minorities and women. The failure of a union to provide sufficient referrals (even though it is obligated to provide exclusive referrals under the terms of a collective bargaining agreement) does not relieve the contractor from the requirements of this paragraph. In the event the union referral practice prevents the contractor from meeting the obligations pursuant to Executive Order 11246, as amended, and these special provisions, such contractor shall immediately notify the contracting agency.
8. **Reasonable Accommodation for Applicants / Employees with Disabilities:** The contractor must be familiar with the requirements for and comply with the Americans with Disabilities Act and all rules and regulations established there under. Employers must provide reasonable accommodation in all employment activities unless to do so would cause an undue hardship.
9. **Selection of Subcontractors, Procurement of Materials and Leasing of Equipment:** The contractor shall not discriminate on the grounds of race, color, religion, sex, national origin, age or disability in the selection and retention of subcontractors, including procurement of materials and leases of equipment. The contractor shall take all necessary and reasonable steps to ensure nondiscrimination in the administration of this contract.
   a. The contractor shall notify all potential subcontractors and suppliers and lessors of their EEO obligations under this contract.
   b. The contractor will use good faith efforts to ensure subcontractor compliance with their EEO obligations.
10. **Assurance Required by 49 CFR 26.13(b):**
   a. The requirements of 49 CFR Part 26 and the State DOT's U.S. DOT-approved DBE program are incorporated by reference.
   b. The contractor or subcontractor shall not discriminate on the basis of race, color, national origin, or sex in the performance of this contract. The contractor shall carry out applicable requirements of 49 CFR Part 26 in the award and administration of DOT-assisted contracts. Failure by the contractor to carry out these requirements is a material breach of this contract, which may result in the termination of this contract or such other remedy as the contracting agency deems appropriate.
11. **Records and Reports:** The contractor shall keep such records as necessary to document compliance with the EEO requirements. Such records shall be retained for a period of three years following the date of the final payment to the contractor for all contract work and shall be available at reasonable times and places for inspection by authorized representatives of the contracting agency and the FHWA.
   a. The records kept by the contractor shall document the following:
      (1) The number and work hours of minority and non-minority group members and women employed in each work classification on the project;
      (2) The progress and efforts being made in cooperation with unions, when applicable, to increase employment opportunities for minorities and women; and
      (3) The progress and efforts being made in locating, hiring, training, qualifying, and upgrading minorities and women;
   b. The contractors and subcontractors will submit an annual report to the contracting agency each July for the duration of the project, indicating the number of minority, women, and non-minority group employees currently engaged in each work classification required by the contract work. This information is to be reported on Form FHWA-1391. The staffing data should represent the project work force on board in all or any part of the last payroll period preceding the end of July. If on-the-job training is being required by special provision, the contractor will be required to collect and report training data. The employment data should reflect the work force on board during all or any part of the last payroll period preceding the end of July.

III. NONSEGREGATED FACILITIES

This provision is applicable to all Federal-aid construction contracts and to all related construction subcontracts of $10,000 or more.

The contractor must ensure that facilities provided for employees are provided in such a manner that segregation on the basis of race, color, religion, sex, or national origin cannot result. The contractor may neither require such segregated use by written or oral policies nor tolerate such use by employee custom. The contractor's obligation extends further to ensure that its employees are not assigned to perform their services at any location, under the contractor's control, where the facilities are segregated. The term "facilities" includes waiting rooms, work areas, restaurants and other eating areas, time clocks, restrooms, washrooms, locker rooms, and other storage or dressing areas, parking lots, drinking fountains, recreation or entertainment areas, transportation, and housing provided for employees. The contractor shall provide separate or single-user restrooms and necessary dressing or sleeping areas to assure privacy between sexes.

IV. DAVIS-BACON AND RELATED ACT PROVISIONS

This section is applicable to all Federal-aid construction projects exceeding $2,000 and to all related subcontracts and lower-tier subcontracts (regardless of subcontract size). The requirements apply to all projects located within the right-of-way of a roadway that is functionally classified as Federal-aid highway. This excludes roadways functionally classified as local roads or rural minor collectors, which are exempt. Contracting agencies may elect to apply these requirements to other projects.

The following provisions are from the U.S. Department of Labor regulations in 29 CFR 5.5 "Contract provisions and related matters" with minor revisions to conform to the FHWA-1273 format and FHWA program requirements.

1. **Minimum wages**
   a. All laborers and mechanics employed or working upon the site of the work, will be paid unconditionally and not less often than once a week, and without subsequent deduction or rebate on any account (except such payroll deductions as are permitted by regulations issued by the

Secretary of Labor under the Copeland Act (29 CFR part 3)), the full amount of wages and bona fide fringe benefits (or cash equivalents thereof) due at time of payment computed at rates not less than those contained in the wage determination of the Secretary of Labor which is attached hereto and made a part hereof, regardless of any contractual relationship which may be alleged to exist between the contractor and such laborers and mechanics.

Contributions made or costs reasonably anticipated for bona fide fringe benefits under section 1(b)(2) of the Davis-Bacon Act on behalf of laborers or mechanics are considered wages paid to such laborers or mechanics, subject to the provisions of paragraph 1.d. of this section; also, regular contributions made or costs incurred for more than a weekly period (but not less often than quarterly) under plans, funds, or programs which cover the particular weekly period, are deemed to be constructively made or incurred during such weekly period. Such laborers and mechanics shall be paid the appropriate wage rate and fringe benefits on the wage determination for the classification of work actually performed, without regard to skill, except as provided in 29 CFR 5.5(a)(4). Laborers or mechanics performing work in more than one classification may be compensated at the rate specified for each classification for the time actually worked therein: Provided, That the employer's payroll records accurately set forth the time spent in each classification in which work is performed. The wage determination (including any additional classification and wage rates conformed under paragraph 1.b. of this section) and the Davis-Bacon poster (WH–1321) shall be posted at all times by the contractor and its subcontractors at the site of the work in a prominent and accessible place where it can be easily seen by the workers.

b. (1) The contracting officer shall require that any class of laborers or mechanics, including helpers, which is not listed in the wage determination and which is to be employed under the contract shall be classified in conformance with the wage determination. The contracting officer shall approve an additional classification and wage rate and fringe benefits therefore only when the following criteria have been met:

(i) The work to be performed by the classification requested is not performed by a classification in the wage determination; and

(ii) The classification is utilized in the area by the construction industry; and

(iii) The proposed wage rate, including any bona fide fringe benefits, bears a reasonable relationship to the wage rates contained in the wage determination.

(2) If the contractor and the laborers and mechanics to be employed in the classification (if known), or their representatives, and the contracting officer agree on the classification and wage rate (including the amount designated for fringe benefits where appropriate), a report of the action taken shall be sent by the contracting officer to the Administrator of the Wage and Hour Division, Employment Standards Administration, U.S. Department of Labor, Washington, DC 20210. The Administrator, or an authorized representative, will approve, modify, or disapprove every additional classification action within 30 days of receipt and so advise the contracting officer or will notify the contracting officer within the 30-day period that additional time is necessary.

(3) In the event the contractor, the laborers or mechanics to be employed in the classification or their representatives, and the contracting officer do not agree on the proposed classification and wage rate (including the amount designated for fringe benefits, where appropriate), the contracting officer shall refer the questions, including the views of all interested parties and the recommendation of the contracting officer, to the Wage and Hour Administrator for determination. The Wage and Hour Administrator, or an authorized representative, will issue a determination within 30 days of receipt and so advise the contracting officer or will notify the contracting officer within the 30-day period that additional time is necessary.

(4) The wage rate (including fringe benefits where appropriate) determined pursuant to paragraphs 1.b.(2) or 1.b.(3) of this section, shall be paid to all workers performing work in the classification under this contract from the first day on which work is performed in the classification.

c. Whenever the minimum wage rate prescribed in the contract for a class of laborers or mechanics includes a fringe benefit which is not expressed as an hourly rate, the contractor shall either pay the benefit as stated in the wage determination or shall pay another bona fide fringe benefit or an hourly cash equivalent thereof.

d. If the contractor does not make payments to a trustee or other third person, the contractor may consider as part of the wages of any laborer or mechanic the amount of any costs reasonably anticipated in providing bona fide fringe benefits under a plan or program, Provided, That the Secretary of Labor has found, upon the written request of the contractor, that the applicable standards of the Davis-Bacon Act have been met. The Secretary of Labor may require the contractor to set aside in a separate account assets for the meeting of obligations under the plan or program.

2. **Withholding.** The contracting agency shall upon its own action or upon written request of an authorized representative of the Department of Labor, withhold or cause to be withheld from the contractor under this contract, or any other Federal contract with the same prime contractor, or any other federally-assisted contract subject to Davis-Bacon prevailing wage requirements, which is held by the same prime contractor, so much of the accrued payments or advances as may be considered necessary to pay laborers and mechanics, including apprentices, trainees, and helpers, employed by the contractor or any subcontractor the full amount of wages required by the contract. In the event of failure to pay any laborer or mechanic, including any apprentice, trainee, or helper, employed or working on the site of the work, all or part of the wages required by the contract, the contracting agency may, after written notice to the contractor, take such action as may be necessary to cause the suspension of any further payment, advance, or guarantee of funds until such violations have ceased.

3. **Payrolls and basic records**

a. Payrolls and basic records relating thereto shall be maintained by the contractor during the course of the work and preserved for a period of three years thereafter for all laborers and mechanics working at the site of the work. Such records shall contain the name, address, and social security number of each such worker, his or her correct classification, hourly rates of wages paid (including rates of contributions or costs anticipated for bona fide fringe benefits or cash equivalents thereof of the types described in section 1(b)(2)(B) of the Davis-Bacon Act), daily and weekly number of hours worked, deductions made and actual wages paid. Whenever the Secretary of Labor has found under 29 CFR 5.5(a)(1)(iv) that the wages of any laborer or mechanic include the amount of any costs reasonably anticipated in providing benefits under a plan or program described in section 1(b)(2)(B) of the Davis-Bacon Act, the contractor shall maintain records which show that the commitment to provide such benefits is enforceable, that the plan or program is financially responsible, and that the plan or program has been communicated in writing to the laborers or mechanics affected, and records which show the costs anticipated or the actual cost incurred in providing such benefits. Contractors employing apprentices or trainees under approved programs shall maintain written evidence of the registration of apprenticeship programs and certification of trainee programs, the registration of the apprentices and trainees, and the ratios and wage rates prescribed in the applicable programs.

b. (1) The contractor shall submit weekly for each week in which any contract work is performed a copy of all payrolls to the contracting agency. The payrolls submitted shall set out accurately and completely all of the information required to be maintained under 29 CFR 5.5(a)(3)(i), except that full social security numbers and home addresses shall not be included on weekly transmittals. Instead the

payrolls shall only need to include an individually identifying number for each employee (e.g. , the last four digits of the employee's social security number). The required weekly payroll information may be submitted in any form desired. Optional Form WH–347 is available for this purpose from the Wage and Hour Division Web site at http://www.dol.gov/esa/whd/forms/ wh347instr.htm or its successor site. The prime contractor is responsible for the submission of copies of payrolls by all subcontractors. Contractors and subcontractors shall maintain the full social security number and current address of each covered worker, and shall provide them upon request to the contracting agency for transmission to the State DOT, the FHWA or the Wage and Hour Division of the Department of Labor for purposes of an investigation or audit of compliance with prevailing wage requirements. It is not a violation of this section for a prime contractor to require a subcontractor to provide addresses and social security numbers to the prime contractor for its own records, without weekly submission to the contracting agency.

(2) Each payroll submitted shall be accompanied by a "Statement of Compliance," signed by the contractor or subcontractor or his or her agent who pays or supervises the payment of the persons employed under the contract and shall certify the following:

(i) That the payroll for the payroll period contains the information required to be provided under §5.5 (a)(3)(ii) of Regulations, 29 CFR part 5, the appropriate information is being maintained under §5.5 (a)(3)(i) of Regulations, 29 CFR part 5, and that such information is correct and complete;

(ii) That each laborer or mechanic (including each helper, apprentice, and trainee) employed on the contract during the payroll period has been paid the full weekly wages earned, without rebate, either directly or indirectly, and that no deductions have been made either directly or indirectly from the full wages earned, other than permissible deductions as set forth in Regulations, 29 CFR part 3;

(iii) That each laborer or mechanic has been paid not less than the applicable wage rates and fringe benefits or cash equivalents for the classification of work performed, as specified in the applicable wage determination incorporated into the contract.

(3) The weekly submission of a properly executed certification set forth on the reverse side of Optional Form WH–347 shall satisfy the requirement for submission of the "Statement of Compliance" required by paragraph 3.b.(2) of this section.

(4) The falsification of any of the above certifications may subject the contractor or subcontractor to civil or criminal prosecution under section 1001 of title 18 and section 231 of title 31 of the United States Code.

c. The contractor or subcontractor shall make the records required under paragraph 3.a. of this section available for inspection, copying, or transcription by authorized representatives of the contracting agency, the State DOT, the FHWA, or the Department of Labor, and shall permit such representatives to interview employees during working hours on the job. If the contractor or subcontractor fails to submit the required records or to make them available, the FHWA may, after written notice to the contractor, the contracting agency or the State DOT, take such action as may be necessary to cause the suspension of any further payment, advance, or guarantee of funds. Furthermore, failure to submit the required records upon request or to make such records available may be grounds for debarment action pursuant to 29 CFR 5.12.

4. **Apprentices and trainees**

a. Apprentices (programs of the USDOL). Apprentices will be permitted to work at less than the predetermined rate for the work they performed when they are employed pursuant to and individually registered in a bona fide apprenticeship program registered with the U.S. Department of Labor, Employment and Training Administration, Office of Apprenticeship Training, Employer and Labor Services, or with a State Apprenticeship Agency recognized by the Office, or if a person is employed in his or her first 90 days of probationary employment as an apprentice in such an apprenticeship program, who is not individually registered in the program, but who has been certified by the Office of Apprenticeship Training, Employer and Labor Services or a State Apprenticeship Agency (where appropriate) to be eligible for probationary employment as an apprentice.

The allowable ratio of apprentices to journeymen on the job site in any craft classification shall not be greater than the ratio permitted to the contractor as to the entire work force under the registered program. Any worker listed on a payroll at an apprentice wage rate, who is not registered or otherwise employed as stated above, shall be paid not less than the applicable wage rate on the wage determination for the classification of work actually performed. In addition, any apprentice performing work on the job site in excess of the ratio permitted under the registered program shall be paid not less than the applicable wage rate on the wage determination for the work actually performed. Where a contractor is performing construction on a project in a locality other than that in which its program is registered, the ratios and wage rates (expressed in percentages of the journeyman's hourly rate) specified in the contractor's or subcontractor's registered program shall be observed.

Every apprentice must be paid at not less than the rate specified in the registered program for the apprentice's level of progress, expressed as a percentage of the journeymen hourly rate specified in the applicable wage determination. Apprentices shall be paid fringe benefits in accordance with the provisions of the apprenticeship program. If the apprenticeship program does not specify fringe benefits, apprentices must be paid the full amount of fringe benefits listed on the wage determination for the applicable classification. If the Administrator determines that a different practice prevails for the applicable apprentice classification, fringes shall be paid in accordance with that determination.

In the event the Office of Apprenticeship Training, Employer and Labor Services, or a State Apprenticeship Agency recognized by the Office, withdraws approval of an apprenticeship program, the contractor will no longer be permitted to utilize apprentices at less than the applicable predetermined rate for the work performed until an acceptable program is approved.

b. Trainees (programs of the USDOL). Except as provided in 29 CFR 5.16, trainees will not be permitted to work at less than the predetermined rate for the work performed unless they are employed pursuant to and individually registered in a program which has received prior approval, evidenced by formal certification by the U.S. Department of Labor, Employment and Training Administration.

The ratio of trainees to journeymen on the job site shall not be greater than permitted under the plan approved by the Employment and Training Administration.

Every trainee must be paid at not less than the rate specified in the approved program for the trainee's level of progress, expressed as a percentage of the journeyman hourly rate specified in the applicable wage determination. Trainees shall be paid fringe benefits in accordance with the provisions of the trainee program. If the trainee program does not mention fringe benefits, trainees shall be paid the full amount of fringe benefits listed on the wage determination unless the Administrator of the Wage and Hour Division determines that there is an apprenticeship program associated with the corresponding journeyman wage rate on the wage determination which provides for less than full fringe benefits for apprentices. Any employee listed on the payroll at a trainee rate who is not registered and participating in a training plan approved by the Employment and Training Administration shall be paid not less than the applicable wage rate on the wage determination for the classification of work actually performed. In addition, any trainee performing work on the job site in excess of the ratio permitted under the registered program shall be paid not less than the applicable wage rate on the wage determination for the work actually performed.

In the event the Employment and Training Administration withdraws approval of a training program, the contractor will no longer be permitted to utilize trainees at less than the applicable predetermined rate for the work performed until an acceptable program is approved.

c. Equal employment opportunity. The utilization of apprentices, trainees and journeymen under this part shall be in conformity with the equal employment opportunity requirements of Executive Order 11246, as amended, and 29 CFR part 30.

d. Apprentices and Trainees (programs of the U.S. DOT). Apprentices and trainees working under apprenticeship and skill training programs which have been certified by the Secretary of Transportation as promoting EEO in connection with Federal-aid highway construction programs are not subject to the requirements of paragraph 4 of this Section IV. The straight time hourly wage rates for apprentices and trainees under such programs will be established by the particular programs. The ratio of apprentices and trainees to journeymen shall not be greater than permitted by the terms of the particular program.

5. **Compliance with Copeland Act requirements.** The contractor shall comply with the requirements of 29 CFR part 3, which are incorporated by reference in this contract.
6. **Subcontracts.** The contractor or subcontractor shall insert Form FHWA-1273 in any subcontracts and also require the subcontractors to include Form FHWA-1273 in any lower tier subcontracts. The prime contractor shall be responsible for the compliance by any subcontractor or lower tier subcontractor with all the contract clauses in 29 CFR 5.5.
7. **Contract termination:** debarment. A breach of the contract clauses in 29 CFR 5.5 may be grounds for termination of the contract, and for debarment as a contractor and a subcontractor as provided in 29 CFR 5.12.
8. **Compliance with Davis-Bacon and Related Act requirements.** All rulings and interpretations of the Davis-Bacon and Related Acts contained in 29 CFR parts 1, 3, and 5 are herein incorporated by reference in this contract.
9. **Disputes concerning labor standards.** Disputes arising out of the labor standards provisions of this contract shall not be subject to the general disputes clause of this contract. Such disputes shall be resolved in accordance with the procedures of the Department of Labor set forth in 29 CFR parts 5, 6, and 7. Disputes within the meaning of this clause include disputes between the contractor (or any of its subcontractors) and the contracting agency, the U.S. Department of Labor, or the employees or their representatives.
10. **Certification of eligibility.**
    a. By entering into this contract, the contractor certifies that neither it (nor he or she) nor any person or firm who has an interest in the contractor's firm is a person or firm ineligible to be awarded Government contracts by virtue of section 3(a) of the Davis-Bacon Act or 29 CFR 5.12(a)(1).
    b. No part of this contract shall be subcontracted to any person or firm ineligible for award of a Government contract by virtue of section 3(a) of the Davis-Bacon Act or 29 CFR 5.12(a)(1).
    c. The penalty for making false statements is prescribed in the U.S. Criminal Code, 18 U.S.C. 1001.

V. CONTRACT WORK HOURS AND SAFETY STANDARDS ACT

The following clauses apply to any Federal-aid construction contract in an amount in excess of $100,000 and subject to the overtime provisions of the Contract Work Hours and Safety Standards Act. These clauses shall be inserted in addition to the clauses required by 29 CFR 5.5(a) or 29 CFR 4.6. As used in this paragraph, the terms laborers and mechanics include watchmen and guards.

1. **Overtime requirements.** No contractor or subcontractor contracting for any part of the contract work which may require or involve the employment of laborers or mechanics shall require or permit any such laborer or mechanic in any workweek in which he or she is employed on such work to work in excess of forty hours in such workweek unless such laborer or mechanic receives compensation at a rate not less than one and one-half times the basic rate of pay for all hours worked in excess of forty hours in such workweek.
2. **Violation; liability for unpaid wages; liquidated damages.** In the event of any violation of the clause set forth in paragraph (1.) of this section, the contractor and any subcontractor responsible therefor shall be liable for the unpaid wages. In addition, such contractor and subcontractor shall be liable to the United States (in the case of work done under contract for the District of Columbia or a territory, to such District or to such territory), for liquidated damages. Such liquidated damages shall be computed with respect to each individual laborer or mechanic, including watchmen and guards, employed in violation of the clause set forth in paragraph (1.) of this section, in the sum of $10 for each calendar day on which such individual was required or permitted to work in excess of the standard workweek of forty hours without payment of the overtime wages required by the clause set forth in paragraph (1.) of this section.
3. **Withholding for unpaid wages and liquidated damages.** The FHWA or the contacting agency shall upon its own action or upon written request of an authorized representative of the Department of Labor withhold or cause to be withheld, from any moneys payable on account of work performed by the contractor or subcontractor under any such contract or any other Federal contract with the same prime contractor, or any other federally-assisted contract subject to the Contract Work Hours and Safety Standards Act, which is held by the same prime contractor, such sums as may be determined to be necessary to satisfy any liabilities of such contractor or subcontractor for unpaid wages and liquidated damages as provided in the clause set forth in paragraph (2.) of this section.
4. **Subcontracts.** The contractor or subcontractor shall insert in any subcontracts the clauses set forth in paragraph (1.) through (4.) of this section and also a clause requiring the subcontractors to include these clauses in any lower tier subcontracts. The prime contractor shall be responsible for compliance by any subcontractor or lower tier subcontractor with the clauses set forth in paragraphs (1.) through (4.) of this section.

VI. SUBLETTING OR ASSIGNING THE CONTRACT

This provision is applicable to all Federal-aid construction contracts on the National Highway System.

1. The contractor shall perform with its own organization contract work amounting to not less than 30 percent (or a greater percentage if specified elsewhere in the contract) of the total original contract price, excluding any specialty items designated by the contracting agency. Specialty items may be performed by subcontract and the amount of any such specialty items performed may be deducted from the total original contract price before computing the amount of work required to be performed by the contractor's own organization (23 CFR 635.116).
    a. The term "perform work with its own organization" refers to workers employed or leased by the prime contractor, and equipment owned or rented by the prime contractor, with or without operators. Such term does not include employees or equipment of a subcontractor or lower tier subcontractor, agents of the prime contractor, or any other assignees. The term may include payments for the costs of hiring leased employees

from an employee leasing firm meeting all relevant Federal and State regulatory requirements. Leased employees may only be included in this term if the prime contractor meets all of the following conditions:
(1) the prime contractor maintains control over the supervision of the day-to-day activities of the leased employees;
(2) the prime contractor remains responsible for the quality of the work of the leased employees;
(3) the prime contractor retains all power to accept or exclude individual employees from work on the project; and
(4) the prime contractor remains ultimately responsible for the payment of predetermined minimum wages, the submission of payrolls, statements of compliance and all other Federal regulatory requirements.

b. "Specialty Items" shall be construed to be limited to work that requires highly specialized knowledge, abilities, or equipment not ordinarily available in the type of contracting organizations qualified and expected to bid or propose on the contract as a whole and in general are to be limited to minor components of the overall contract.

2. The contract amount upon which the requirements set forth in paragraph (1) of Section VI is computed includes the cost of material and manufactured products which are to be purchased or produced by the contractor under the contract provisions.
3. The contractor shall furnish (a) a competent superintendent or supervisor who is employed by the firm, has full authority to direct performance of the work in accordance with the contract requirements, and is in charge of all construction operations (regardless of who performs the work) and (b) such other of its own organizational resources (supervision, management, and engineering services) as the contracting officer determines is necessary to assure the performance of the contract.
4. No portion of the contract shall be sublet, assigned or otherwise disposed of except with the written consent of the contracting officer, or authorized representative, and such consent when given shall not be construed to relieve the contractor of any responsibility for the fulfillment of the contract. Written consent will be given only after the contracting agency has assured that each subcontract is evidenced in writing and that it contains all pertinent provisions and requirements of the prime contract.
5. The 30% self-performance requirement of paragraph (1) is not applicable to design-build contracts; however, contracting agencies may establish their own self-performance requirements.

VII. SAFETY: ACCIDENT PREVENTION

This provision is applicable to all Federal-aid construction contracts and to all related subcontracts.

1. In the performance of this contract the contractor shall comply with all applicable Federal, State, and local laws governing safety, health, and sanitation (23 CFR 635). The contractor shall provide all safeguards, safety devices and protective equipment and take any other needed actions as it determines, or as the contracting officer may determine, to be reasonably necessary to protect the life and health of employees on the job and the safety of the public and to protect property in connection with the performance of the work covered by the contract.
2. It is a condition of this contract, and shall be made a condition of each subcontract, which the contractor enters into pursuant to this contract, that the contractor and any subcontractor shall not permit any employee, in performance of the contract, to work in surroundings or under conditions which are unsanitary, hazardous or dangerous to his/her health or safety, as determined under construction safety and health standards (29 CFR 1926) promulgated by the Secretary of Labor, in accordance with Section 107 of the Contract Work Hours and Safety Standards Act (40 U.S.C. 3704).
3. Pursuant to 29 CFR 1926.3, it is a condition of this contract that the Secretary of Labor or authorized representative thereof, shall have right of entry to any site of contract performance to inspect or investigate the matter of compliance with the construction safety and health standards and to carry out the duties of the Secretary under Section 107 of the Contract Work Hours and Safety Standards Act (40 U.S.C.3704).

VIII. FALSE STATEMENTS CONCERNING HIGHWAY PROJECTS

This provision is applicable to all Federal-aid construction contracts and to all related subcontracts.

In order to assure high quality and durable construction in conformity with approved plans and specifications and a high degree of reliability on statements and representations made by engineers, contractors, suppliers, and workers on Federal-aid highway projects, it is essential that all persons concerned with the project perform their functions as carefully, thoroughly, and honestly as possible. Willful falsification, distortion, or misrepresentation with respect to any facts related to the project is a violation of Federal law. To prevent any misunderstanding regarding the seriousness of these and similar acts, Form FHWA-1022 shall be posted on each Federal-aid highway project (23 CFR 635) in one or more places where it is readily available to all persons concerned with the project:

18 U.S.C. 1020 reads as follows:

"Whoever, being an officer, agent, or employee of the United States, or of any State or Territory, or whoever, whether a person, association, firm, or corporation, knowingly makes any false statement, false representation, or false report as to the character, quality, quantity, or cost of the material used or to be used, or the quantity or quality of the work performed or to be performed, or the cost thereof in connection with the submission of plans, maps, specifications, contracts, or costs of construction on any highway or related project submitted for approval to the Secretary of Transportation; or

Whoever knowingly makes any false statement, false representation, false report or false claim with respect to the character, quality, quantity, or cost of any work performed or to be performed, or materials furnished or to be furnished, in connection with the construction of any highway or related project approved by the Secretary of Transportation; or

Whoever knowingly makes any false statement or false representation as to material fact in any statement, certificate, or report submitted pursuant to provisions of the Federal-aid Roads Act approved July 1, 1916, (39 Stat. 355), as amended and supplemented;

Shall be fined under this title or imprisoned not more than 5 years or both."

IX. IMPLEMENTATION OF CLEAN AIR ACT AND FEDERAL WATER POLLUTION CONTROL ACT

This provision is applicable to all Federal-aid construction contracts and to all related subcontracts.

By submission of this bid/proposal or the execution of this contract, or subcontract, as appropriate, the bidder, proposer, Federal-aid construction contractor, or subcontractor, as appropriate, will be deemed to have stipulated as follows:

1. That any person who is or will be utilized in the performance of this contract is not prohibited from receiving an award due to a violation of Section 508 of the Clean Water Act or Section 306 of the Clean Air Act.
2. That the contractor agrees to include or cause to be included the requirements of paragraph (1) of this Section X in every subcontract, and further agrees to take such action as the contracting agency may direct as a means of enforcing such requirements.

X. CERTIFICATION REGARDING DEBARMENT, SUSPENSION, INELIGIBILITY AND VOLUNTARY EXCLUSION

This provision is applicable to all Federal-aid construction contracts, design-build contracts, subcontracts, lower-tier subcontracts, purchase orders, lease agreements, consultant contracts or any other covered transaction requiring FHWA approval or that is estimated to cost $25,000 or more – as defined in 2 CFR Parts 180 and 1200.

1. **Instructions for Certification – First Tier Participants:**
   a. By signing and submitting this proposal, the prospective first tier participant is providing the certification set out below.
   b. The inability of a person to provide the certification set out below will not necessarily result in denial of participation in this covered transaction. The prospective first tier participant shall submit an explanation of why it cannot provide the certification set out below. The certification or explanation will be considered in connection with the department or agency's determination whether to enter into this transaction. However, failure of the prospective first tier participant to furnish a certification or an explanation shall disqualify such a person from participation in this transaction.
   c. The certification in this clause is a material representation of fact upon which reliance was placed when the contracting agency determined to enter into this transaction. If it is later determined that the prospective participant knowingly rendered an erroneous certification, in addition to other remedies available to the Federal Government, the contracting agency may terminate this transaction for cause of default.
   d. The prospective first tier participant shall provide immediate written notice to the contracting agency to whom this proposal is submitted if any time the prospective first tier participant learns that its certification was erroneous when submitted or has become erroneous by reason of changed circumstances.
   e. The terms "covered transaction," "debarred," "suspended," "ineligible," "participant," "person," "principal," and "voluntarily excluded," as used in this clause, are defined in 2 CFR Parts 180 and 1200. "First Tier Covered Transactions" refers to any covered transaction between a grantee or subgrantee of Federal funds and a participant (such as the prime or general contract). "Lower Tier Covered Transactions" refers to any covered transaction under a First Tier Covered Transaction (such as subcontracts). "First Tier Participant" refers to the participant who has entered into a covered transaction with a grantee or subgrantee of Federal funds (such as the prime or general contractor). "Lower Tier Participant" refers any participant who has entered into a covered transaction with a First Tier Participant or other Lower Tier Participants (such as subcontractors and suppliers).
   f. The prospective first tier participant agrees by submitting this proposal that, should the proposed covered transaction be entered into, it shall not knowingly enter into any lower tier covered transaction with a person who is debarred, suspended, declared ineligible, or voluntarily excluded from participation in this covered transaction, unless authorized by the department or agency entering into this transaction.
   g. The prospective first tier participant further agrees by submitting this proposal that it will include the clause titled "Certification Regarding Debarment, Suspension, Ineligibility and Voluntary Exclusion-Lower Tier Covered Transactions," provided by the department or contracting agency, entering into this covered transaction, without modification, in all lower tier covered transactions and in all solicitations for lower tier covered transactions exceeding the $25,000 threshold.
   h. A participant in a covered transaction may rely upon a certification of a prospective participant in a lower tier covered transaction that is not debarred, suspended, ineligible, or voluntarily excluded from the covered transaction, unless it knows that the certification is erroneous. A participant is responsible for ensuring that its principals are not suspended, debarred, or otherwise ineligible to participate in covered transactions. To verify the eligibility of its principals, as well as the eligibility of any lower tier prospective participants, each participant may, but is not required to, check the Excluded Parties List System website (https://www.epls.gov/), which is compiled by the General Services Administration.
   i. Nothing contained in the foregoing shall be construed to require the establishment of a system of records in order to render in good faith the certification required by this clause. The knowledge and information of the prospective participant is not required to exceed that which is normally possessed by a prudent person in the ordinary course of business dealings.
   j. Except for transactions authorized under paragraph (f) of these instructions, if a participant in a covered transaction knowingly enters into a lower tier covered transaction with a person who is suspended, debarred, ineligible, or voluntarily excluded from participation in this transaction, in addition to other remedies available to the Federal Government, the department or agency may terminate this transaction for cause or default.

* * * * *

2. **Certification Regarding Debarment, Suspension, Ineligibility and Voluntary Exclusion – First Tier Participants:**
   a. The prospective first tier participant certifies to the best of its knowledge and belief, that it and its principals:
      (1) Are not presently debarred, suspended, proposed for debarment, declared ineligible, or voluntarily excluded from participating in covered transactions by any Federal department or agency;
      (2) Have not within a three-year period preceding this proposal been convicted of or had a civil judgment rendered against them for commission of fraud or a criminal offense in connection with obtaining, attempting to obtain, or performing a public (Federal, State or local) transaction or contract under a public transaction; violation of Federal or State antitrust statutes or commission of embezzlement, theft, forgery, bribery, falsification or destruction of records, making false statements, or receiving stolen property;
      (3) Are not presently indicted for or otherwise criminally or civilly charged by a governmental entity (Federal, State or local) with commission of any of the offenses enumerated in paragraph (a)(2) of this certification; and
      (4) Have not within a three-year period preceding this application/proposal had one or more public transactions (Federal, State or local) terminated for cause or default.
   b. Where the prospective participant is unable to certify to any of the statements in this certification, such prospective participant shall attach an explanation to this proposal.

2. **Instructions for Certification - Lower Tier Participants:**
   (Applicable to all subcontracts, purchase orders and other lower tier transactions requiring prior FHWA approval or estimated to cost $25,000 or more - 2 CFR Parts 180 and 1200)
   a. By signing and submitting this proposal, the prospective lower tier is providing the certification set out below.
   b. The certification in this clause is a material representation of fact upon which reliance was placed when this transaction was entered into. If it is later determined that the prospective lower tier participant knowingly rendered an erroneous certification, in addition to other remedies available to the Federal Government, the department, or agency with which this transaction originated may pursue available remedies, including suspension and/or debarment.

c. The prospective lower tier participant shall provide immediate written notice to the person to which this proposal is submitted if at any time the prospective lower tier participant learns that its certification was erroneous by reason of changed circumstances.
d. The terms "covered transaction," "debarred," "suspended," "ineligible," "participant," "person," "principal," and "voluntarily excluded," as used in this clause, are defined in 2 CFR Parts 180 and 1200. You may contact the person to which this proposal is submitted for assistance in obtaining a copy of those regulations. "First Tier Covered Transactions" refers to any covered transaction between a grantee or subgrantee of Federal funds and a participant (such as the prime or general contract). "Lower Tier Covered Transactions" refers to any covered transaction under a First Tier Covered Transaction (such as subcontracts). "First Tier Participant" refers to the participant who has entered into a covered transaction with a grantee or subgrantee of Federal funds (such as the prime or general contractor). "Lower Tier Participant" refers any participant who has entered into a covered transaction with a First Tier Participant or other Lower Tier Participants (such as subcontractors and suppliers).
e. The prospective lower tier participant agrees by submitting this proposal that, should the proposed covered transaction be entered into, it shall not knowingly enter into any lower tier covered transaction with a person who is debarred, suspended, declared ineligible, or voluntarily excluded from participation in this covered transaction, unless authorized by the department or agency with which this transaction originated.
f. The prospective lower tier participant further agrees by submitting this proposal that it will include this clause titled "Certification Regarding Debarment, Suspension, Ineligibility and Voluntary Exclusion-Lower Tier Covered Transaction," without modification, in all lower tier covered transactions and in all solicitations for lower tier covered transactions exceeding the $25,000 threshold.
g. A participant in a covered transaction may rely upon a certification of a prospective participant in a lower tier covered transaction that is not debarred, suspended, ineligible, or voluntarily excluded from the covered transaction, unless it knows that the certification is erroneous. A participant is responsible for ensuring that its principals are not suspended, debarred, or otherwise ineligible to participate in covered transactions. To verify the eligibility of its principals, as well as the eligibility of any lower tier prospective participants, each participant may, but is not required to, check the Excluded Parties List System website (https://www.epls.gov/), which is compiled by the General Services Administration.
h. Nothing contained in the foregoing shall be construed to require establishment of a system of records in order to render in good faith the certification required by this clause. The knowledge and information of participant is not required to exceed that which is normally possessed by a prudent person in the ordinary course of business dealings.
i. Except for transactions authorized under paragraph e of these instructions, if a participant in a covered transaction knowingly enters into a lower tier covered transaction with a person who is suspended, debarred, ineligible, or voluntarily excluded from participation in this transaction, in addition to other remedies available to the Federal Government, the department or agency with which this transaction originated may pursue available remedies, including suspension and/or debarment.

* * * * *

Certification Regarding Debarment, Suspension, Ineligibility and Voluntary Exclusion--Lower Tier Participants:

1. The prospective lower tier participant certifies, by submission of this proposal, that neither it nor its principals is presently debarred, suspended, proposed for debarment, declared ineligible, or voluntarily excluded from participating in covered transactions by any Federal department or agency.
2. Where the prospective lower tier participant is unable to certify to any of the statements in this certification, such prospective participant shall attach an explanation to this proposal.

* * * * *

XI. CERTIFICATION REGARDING USE OF CONTRACT FUNDS FOR LOBBYING

This provision is applicable to all Federal-aid construction contracts and to all related subcontracts which exceed $100,000 (49 CFR 20).

1. The prospective participant certifies, by signing and submitting this bid or proposal, to the best of his or her knowledge and belief, that:
   a. No Federal appropriated funds have been paid or will be paid, by or on behalf of the undersigned, to any person for influencing or attempting to influence an officer or employee of any Federal agency, a Member of Congress, an officer or employee of Congress, or an employee of a Member of Congress in connection with the awarding of any Federal contract, the making of any Federal grant, the making of any Federal loan, the entering into of any cooperative agreement, and the extension, continuation, renewal, amendment, or modification of any Federal contract, grant, loan, or cooperative agreement.
   b. If any funds other than Federal appropriated funds have been paid or will be paid to any person for influencing or attempting to influence an officer or employee of any Federal agency, a Member of Congress, an officer or employee of Congress, or an employee of a Member of Congress in connection with this Federal contract, grant, loan, or cooperative agreement, the undersigned shall complete and submit Standard Form-LLL, "Disclosure Form to Report Lobbying," in accordance with its instructions.
2. This certification is a material representation of fact upon which reliance was placed when this transaction was made or entered into. Submission of this certification is a prerequisite for making or entering into this transaction imposed by 31 U.S.C. 1352. Any person who fails to file the required certification shall be subject to a civil penalty of not less than $10,000 and not more than $100,000 for each such failure.
3. The prospective participant also agrees by submitting its bid or proposal that the participant shall require that the language of this certification be included in all lower tier subcontracts, which exceed $100,000 and that all such recipients shall certify and disclose accordingly.

STANDARD SPECIAL PROVISION

ON-THE-JOB TRAINING

(10-16-07) (Rev. 7-21-09) Z-10

Description

The North Carolina Department of Transportation will administer a custom version of the Federal On-the-Job Training (OJT) Program, commonly referred to as the Alternate OJT Program. All contractors (existing and newcomers) will be automatically placed in the Alternate Program. Standard OJT requirements typically associated with individual projects will no longer be applied at the project level. Instead, these requirements will be applicable on an annual basis for each contractor administered by the OJT Program Manager.

On the Job Training shall meet the requirements of 23 CFR 230.107 (b), 23 USC – Section 140, this provision and the On-the-Job Training Program Manual.

The Alternate OJT Program will allow a contractor to train employees on Federal, State and privately funded projects located in North Carolina. However, priority shall be given to training employees on NCDOT Federal-Aid funded projects.

Minorities and Women

Developing, training and upgrading of minorities and women toward journeyman level status is a primary objective of this special training provision. Accordingly, the Contractor shall make every effort to enroll minority and women as trainees to the extent that such persons are available within a reasonable area of recruitment. This training commitment is not intended, and shall not be used, to discriminate against any applicant for training, whether a member of a minority group or not.

Assigning Training Goals

The Department, through the OJT Program Manager, will assign training goals for a calendar year based on the contractors' past three years' activity and the contractors' anticipated upcoming year's activity with the Department. At the beginning of each year, all contractors eligible will be contacted by the Department to determine the number of trainees that will be assigned for the upcoming calendar year. At that time the Contractor shall enter into an agreement with the Department to provide a self-imposed on-the-job training program for the calendar year. This agreement will include a specific number of annual training goals agreed to by both parties. The number of training assignments may range from 1 to 15 per contractor per calendar year. The Contractor shall sign an agreement to fulfill their annual goal for the year. A sample agreement is available at www.ncdot.org/business/ocs/ojt/.

Training Classifications

The Contractor shall provide on-the-job training aimed at developing full journeyman level workers in the construction craft/operator positions. Preference shall be given to providing training in the following skilled work classifications:

Equipment Operators	Office Engineers
Truck Drivers	Estimators
Carpenters	Iron / Reinforcing Steel Workers
Concrete Finishers	Mechanics
Pipe Layers	Welders

The Department has established common training classifications and their respective training requirements that may be used by the contractors. However, the classifications established are not all-inclusive. Where the training is oriented toward construction applications, training will be allowed in lower-level management positions such as office engineers and estimators. Contractors shall submit new classifications for specific job functions that their employees are performing. The Department will review and recommend for acceptance to FHWA the new classifications proposed by contractors, if applicable. New classifications shall meet the following requirements:

Proposed training classifications are reasonable and realistic based on the job skill classification needs, and

The number of training hours specified in the training classification is consistent with common practices and provides enough time for the trainee to obtain journeyman level status.

The Contractor may allow trainees to be trained by a subcontractor provided that the Contractor retains primary responsibility for meeting the training and this provision is made applicable to the subcontract. However, only the Contractor will receive credit towards the annual goal for the trainee.

Where feasible, 25 percent of apprentices or trainees in each occupation shall be in their first year of apprenticeship or training. The number of trainees shall be distributed among the work classifications on the basis of the contractor's needs and the availability of journeymen in the various classifications within a reasonable area of recruitment.

No employee shall be employed as a trainee in any classification in which they have successfully completed a training course leading to journeyman level status or in which they have been employed as a journeyman.

Records and Reports

The Contractor shall maintain enrollment, monthly and completion reports documenting company compliance under these contract documents. These documents and any other information as requested shall be submitted to the OJT Program Manager.

Upon completion and graduation of the program, the Contractor shall provide each trainee with a certification Certificate showing the type and length of training satisfactorily completed.

Trainee Interviews

All trainees enrolled in the program will receive an initial and Trainee/Post graduate interview conducted by the OJT program staff.

Trainee Wages

Contractors shall compensate trainees on a graduating pay scale based upon a percentage of the prevailing minimum journeyman wages (Davis-Bacon Act). Minimum pay shall be as follows:

60 percent	of the journeyman wage for the first half of the training period
75 percent	of the journeyman wage for the third quarter of the training period
90 percent	of the journeyman wage for the last quarter of the training period

In no instance shall a trainee be paid less than the local minimum wage. The Contractor shall adhere to the minimum hourly wage rate that will satisfy both the NC Department of Labor (NCDOL) and the Department.

Achieving or Failing to Meet Training Goals

The Contractor will be credited for each trainee employed by him on the contract work who is currently enrolled or becomes enrolled in an approved program and who receives training for at least 50 percent of the specific program requirement. Trainees will be allowed to be transferred between projects if required by the Contractor's scheduled workload to meet training goals.

If a contractor fails to attain their training assignments for the calendar year, they may be taken off the NCDOT's Bidders List.

Measurement and Payment

No compensation will be made for providing required training in accordance with these contract documents.

STANDARD SPECIAL PROVISION
MINIMUM WAGES
GENERAL DECISION NC120093 01/06/2012 NC93

Z-93

Date: January 6, 2012

General Decision Number: NC120093 01/06/2012 NC93

Superseded General Decision Numbers: NC20100130

State: North Carolina

Construction Type: HIGHWAY

COUNTIES:

Chatham	Greene	Person
Durham	Nash	Pitt
Edgecombe	Orange	Wayne

HIGHWAY CONSTRUCTION PROJECTS (excluding tunnels, building structures in rest area projects, railroad construction, bascule, suspension and spandrel arch bridges designed for commercial navigation, bridges involving marine construction, and other major bridges).

Modification Number	Publication Date
0	01/06/2012

SUNC2011-074 09/16/2011

	Rates	Fringes
CARPENTER (Form Work Only)	13.31	
CEMENT MASON/CONCRETE FINISHER	14.02	
IRONWORKER (Reinforcing)	14.88	
LABORER		
Asphalt, Asphalt Distributor, Raker, and Spreader		
Chatham, Durham, Edgecombe, Greene, Nash, Pitt, and Wayne Counties	12.20	
Asphalt, Asphalt Raker, and Spreader		
Orange and Person Counties	12.97	
Common or General		
Chatham, Orange, and Person Counties	10.85	
Durham County	10.93	
Edgecombe and Nash Counties	10.88	
Greene and Pitt Counties	9.30	
Wayne County	9.63	
Concrete Saw	13.52	
Landscape	8.67	
Luteman	12.73	
Mason Tender (Cement/Concrete)	11.43	
Pipelayer	12.07	
Traffic Control (Cone Setter)	11.15	
Traffic Control (Flagger)	9.89	

	Rates	Fringes
POWER EQUIPMENT OPERATORS		
Backhoe/Excavator/Trackhoe		
Chatham, Orange, and Person Counties	14.99	
Durham County	15.24	
Remaining Counties	15.70	
Broom/Sweeper	13.97	
Bulldozer		
Chatham, Durham, Orange, and Person Counties	15.45	
Remaining Counties	15.63	
Crane	20.14	
Curb Machine	14.43	
Distributor	15.65	
Drill	18.28	
Grader/Blade	17.68	
Loader		
Chatham, Durham, Orange, and Person Counties	15.07	
Remaining Counties	14.40	
Mechanic	18.61	
Milling Machine	14.38	
Oiler	14.72	
Paver	15.24	
Roller		
Chatham, Orange, and Person Counties	13.11	
Durham County	13.07	
Remaining Counties	13.10	
Scraper	14.35	
Screed	15.12	
Tractor	14.47	
TRUCK DRIVER		
Distributor	16.75	
Dump Truck	12.50	
Flatbed Truck	15.02	
Lowboy Truck		
Chatham, Durham, Orange, and Person Counties	15.39	
Remaining Counties	15.27	
Off the Road Truck	13.78	
Single Axle Truck	12.13	
Tack Truck	16.51	
Water Truck	13.39	

Welders – Receive rate prescribed for craft performing operation to which welding is incidental.

Unlisted classifications needed for work not included within the scope of the classifications listed may be added after award only as provided in the labor standards contract clauses (29 CFR 5.5(a)(1)(ii)).

The body of each wage determination lists the classification and wage rates that have been found to be prevailing for the cited type(s) of construction in the area covered by the wage determination. The classifications are listed in alphabetical order of "identifiers" that indicate whether the particular rate is union or non-union.

Union Identifiers

An identifier enclosed in dotted lines beginning with characters other than "SU" denotes that the union classification and rate have found to be prevailing for that classification. Example: PLUM0198-005 07/01/2011. The first four letters , PLUM, indicate the international union and the four-digit number, 0198, that follows indicates the local union number or district council number where applicable, i.e., Plumbers Local 0198. The next number, 005 in the example, is an internal number used in processing the wage determination. The date, 07/01/2011, following these characters is the effective date of the most current negotiated rate/collective bargaining agreement which would be July 1, 2011 in the above example.

Union prevailing wage rates will be updated to reflect any changes in the collective bargaining agreements governing the rate.

Non-Union Identifiers

Classifications listed under an "SU" identifier were derived from survey data by computing average rates and are not union rates; however, the data used in computing these rates may include both union and non-union data. Example: SULA2004-007 5/13/2010. SU indicates the rates are not union rates, LA indicates the State of Louisiana; 2004 is the year of the survey; and 007 is an internal number used in producing the wage determination. A 1993 or later date, 5/13/2010, indicates the classifications and rates under that identifier were issued as a General Wage Determination on that date.

Survey wage rates will remain in effect and will not change until a new survey is conducted.

WAGE DETERMINATION APPEALS PROCESS

1.) Has there been an initial decision in the matter? This can be:

* an existing published wage determination
* a survey underlying a wage determination
* a Wage and Hour Division letter setting forth a position on a wage determination matter
* a conformance (additional classification and rate) ruling

On survey related matters, initial contact, including requests for summaries of surveys, should be with the Wage and Hour Regional Office for the area in which the survey was conducted because those Regional Offices have responsibility for the Davis-Bacon survey program. If the response from this initial contact is not satisfactory, then the process described in 2.) and 3.) should be followed.

With regard to any other matter not yet ripe for the formal process described here, initial contact should be with the Branch of Construction Wage Determinations. Write to:

Branch of Construction Wage Determinations
Wage and Hour Division
U. S. Department of Labor
200 Constitution Avenue, N.W.
Washington, D.C. 20210

2.) If the answer to the question in 1.) is yes, then an interested party (those affected by the action) can request review and reconsideration from the Wage and Hour Administrator (See 29 CFR Part 1.8 and 29 CFR Part 7). Write to:

Wage and Hour Administrator
U.S. Department of Labor
200 Constitution Avenue, N.W.
Washington, D.C. 20210

The request should be accompanied by a full statement of the interested party's position and by any information (wage payment data, project description, area practice material, etc.) that the requestor considers relevant to the issue.

3.) If the decision of the Administrator is not favorable, an interested party may appeal directly to the Administrative Review Board (formerly the Wage Appeals Board). Write to:

Administrative Review Board
U.S. Department of Labor
200 Constitution Avenue, N.W.
Washington, D.C. 20210

4.) All decisions by the Administrative Review Board are final.

END OF GENERAL DECISION

Vendor 1 of 4: TRIANGLE GRADING & PAVING, INC (3752)
Call Order 013 (Proposal: C203175)

Bid Information

County: ORANGE
Address: P.O. Drawer 2570
Burlington , NC , 27216
Signature Check: R_G_Kirkpatrick_Jr_3752
Time Bid Received: October 16, 2012 01:54 PM
Amendment Count: 0

Bid Checksum: B6AEAA03
Bid Total: $4,565,146.64
Items Total: $4,565,146.64
Time Total: $0.00

Bidding Errors:
Section Error : Section Error: section 0001 only parti
Item Error : item option group AA has too many choices

DBE GOAL SET	13.0
DBE GOAL MET	13.0

Vendor 1 of 4: TRIANGLE GRADING & PAVING, INC (3752)
Call Order 013 (Proposal: C203175)

Bid Bond Information

Projects:		**Bond Maximum:**	
Counties:		**State of Incorporation:**	
Bond ID:	4mf7-nphv-egtj-m88c	**Agency Execution Date:**	10/16/2012
Paid by Check:	No	**Surety Name:**	SurePathNetwork
Bond Percent:	5%	**Bond Agency Name:**	Liberty Mutual Insurance Company

Vendor 3752's Bid Information for Call 013, Letting L121016, 10/16/12

Triangle Grading and Paving, Inc (3752)
Call Order 013 (Proposal ID C203175)

LIST OF DBE PARTICIPANTS

VENDOR NUMBER	DBE NAME / ADDRESS	WORK CODE	TYPE OF WORK	CERT TYPE	AMOUNT	
2976 WB	CAROLINA ENVIRONMENTAL CONTRACT POST OFFICE BOX 1905 , MT. AIRY, NC 27030			Sub	23,614.20	committed
11572 MB	CRUZ BROTHERS CONCRETE, INC. 1572 PAYNE ROAD/LOT 75 LOT 75 , GRAHAM, NC 27253			Sub	229,220.00	committed
12814 WB	GARNER-MURPHY CONSTRUCTION, INC 130 CHUCK GARNER TRAIL , GRAHAM, NC 27253			Sub	126,215.00	committed
4761 WB	TRAFFIC CONTROL SAFETY SERVICES POST OFFICE BOX 24511 , WINSTON-SALEM, NC 27114			Sub	122,859.50	committed
11151 MB	BRIGHTSTAR LANDSCAPING LLC. 118 SOUTH PERSON STREET , RALEIGH, NC 27601			Sub	67,543.75	committed
4898 WB	BULLINGTON CONSTRUCTION INC 417 FOXGLOVE LANE , INDIAN TRAIL, NC 28079			Sub	24,500.00	committed
				TOTAL:	$593,952.45	
					13.01%	

Vendor 3752's Bid Information for Call 013, Letting L121016, 10/16/12

Triangle Grading and Paving, Inc (3752)
Call Order 013 (Proposal ID C203175)

Miscelleneous Data Info - Contractor Responses:
==========

NON-COLLUSION AND DEBARMENT CERTIFICATION

Explanation of the prospective bidder that is unable to certify to any of the statements in this certification:

Explanation:
NOT ANSWERED
NOT ANSWERED
NOT ANSWERED
NOT ANSWERED

AWARD LIMITS ON MULTIPLE PROJECTS

By answering YES to this statement, the bidder acknowleges that they are using the award limits on multiple projects. No

It is the desire of the Bidder to be awarded contracts, the value of which will not exceed a total of NOT ANSWERED for those projects indicated herein, for which bids will be opened on (MM/DD/YY)

The Award Limits shall apply to the following projects:

Contract Number	County
NOT ANSWERED	
NOT ANSWERED	
NOT ANSWERED	
NOT ANSWERED	

NOT ANSWERED
NOT ANSWERED

Bid Bond Data Info - Contractor Responses:
==========

BondID: 4mf7-nphv-egtj-m88c
Surety Registry Agency: SurePathNetwork
Verified?: Yes
Surety Agency: Liberty Mutual Insurance Company
Bond Execution Date: 10/16/2012
Bond Amount: $228,257.33 (Five Percent of Bid)

Contract ID: C203175 Project(s): STP-0086(5)
Letting Date: 10-16-12 Call Order: 013
Bidder: 3752 - Triangle Grading and Paving, Inc

Line No.	Item Description	Approx. Quantity and Units	Unit Price Dollars	Unit Price Cts	Bid Amount Dollars	Bid Amount Ct
Section 0001	ROADWAY ITEMS					
	Alt Group					
0001	0000100000-N MOBILIZATION	LUMP	LUMP		205,000.00	
0002	0043000000-N GRADING	LUMP	LUMP		916,627.00	
0003	0050000000-E SUPPLEMENTARY CLEARING & GRUB-BING	1.000 ACR	3,500.00000		3,500.00	
0004	0057000000-E UNDERCUT EXCAVATION	350.000 CY	28.00000		9,800.00	
0005	0134000000-E DRAINAGE DITCH EXCAVATION	1,720.000 CY	11.00000		18,920.00	
0006	0195000000-E SELECT GRANULAR MATERIAL	250.000 CY	22.00000		5,500.00	
0007	0196000000-E GEOTEXTILE FOR SOIL STABILIZA-TION	450.000 SY	4.00000		1,800.00	
0008	0234000000-E GENERIC GRADING ITEM EXCAVATION AND STOCKPILING CONTAMINATED SOIL	100.000 CY	40.00000		4,000.00	
0009	0318000000-E FOUNDATION CONDITIONING MATE- RIAL, MINOR STRUCTURES	740.000 TON	35.00000		25,900.00	
0010	0320000000-E FOUNDATION CONDITIONING GEO-TEXTILE	1,680.000 SY	2.50000		4,200.00	

Contract ID: C203175 Project(s): STP-0086(5)
Letting Date: 10-16-12 Call Order: 013
Bidder: 3752 - Triangle Grading and Paving, Inc

Line No.	Item Description	Approx. Quantity and Units	Unit Price Dollars	Unit Price Cts	Bid Amount Dollars	Bid Amount Ct
0011	0366000000-E 15" RC PIPE CULVERTS, CLASS III	76.000 LF	39.00000		2,964.00	
0012	0384000000-E 30" RC PIPE CULVERTS, CLASS III	36.000 LF	75.28000		2,710.08	
0013	0396000000-E 42" RC PIPE CULVERTS, CLASS III	172.000 LF	133.00000		22,876.00	
0014	0448200000-E 15" RC PIPE CULVERTS, CLASS IV	1,932.000 LF	30.50000		58,926.00	
0015	0448300000-E 18" RC PIPE CULVERTS, CLASS IV	358.000 LF	37.22000		13,324.76	
0016	0448400000-E 24" RC PIPE CULVERTS, CLASS IV	1,420.000 LF	48.00000		68,160.00	
0017	0448500000-E 30" RC PIPE CULVERTS, CLASS IV	556.000 LF	63.00000		35,028.00	
0018	0582000000-E 15" CS PIPE CULVERTS, 0.064" THICK	16.000 LF	53.00000		848.00	
0019	0594000000-E 24" CS PIPE CULVERTS, 0.064" THICK	52.000 LF	57.00000		2,964.00	
0020	0600000000-E 30" CS PIPE CULVERTS, 0.079" THICK	332.000 LF	61.00000		20,252.00	
0021	0636000000-E **" CS PIPE ELBOWS, *****" THICK (15", 0.064")	2.000 EA	200.00000		400.00	
0022	0636000000-E **" CS PIPE ELBOWS, *****" THICK (24", 0.064")	2.000 EA	575.00000		1,150.00	

Contract ID: C203175 Project(s): STP-0086(5)
Letting Date: 10-16-12 Call Order: 013
Bidder: 3752 - Triangle Grading and Paving, Inc

Line No.	Item Description	Approx. Quantity and Units	Unit Price Dollars	Unit Price Cts	Bid Amount Dollars	Bid Amount Ct
0023	0636000000-E **" CS PIPE ELBOWS, *****" THICK (30", 0.079")	2.000 EA	795.00000		1,590.00	
0024	0973100000-E **" WELDED STEEL PIPE, ****" THICK, GRADE B IN SOIL (42", 0.625", B)	40.000 LF	348.00000		13,920.00	
0025	0973300000-E **" WELDED STEEL PIPE, ****" THICK, GRADE B NOT IN SOIL (42", 0.625", B)	40.000 LF	890.00000		35,600.00	
0026	0986000000-E GENERIC PIPE ITEM TEMPORARY 12" PLASTIC CORRUGATED PIPE	32.000 LF	42.00000		1,344.00	
0027	0995000000-E PIPE REMOVAL	920.400 LF	11.00000		10,124.40	
0028	1077000000-E #57 STONE	40.000 TON	60.74000		2,429.60	
0029	1099500000-E SHALLOW UNDERCUT	2,000.000 CY	11.00000		22,000.00	
0030	1099700000-E CLASS IV SUBGRADE STABILIZA- TION	4,000.000 TON	16.00000		64,000.00	
0031	1110000000-E STABILIZER AGGREGATE	500.000 TON	21.00000		10,500.00	
0032	1220000000-E INCIDENTAL STONE BASE	1,500.000 TON	22.00000		33,000.00	
0033	1297000000-E MILLING ASPHALT PAVEMENT, ***"DEPTH (1-1/2")	880.000 SY	6.00000		5,280.00	

Contract ID: C203175 Project(s): STP-0086(5)
Letting Date: 10-16-12 Call Order: 013
Bidder: 3752 - Triangle Grading and Paving, Inc

Line No.	Item Description	Approx. Quantity and Units	Unit Price Dollars	Unit Price Cts	Bid Amount Dollars	Bid Amount Ct
0034	1308000000-E MILLING ASPHALT PAVEMENT, ***"TO ******" (0" TO 3")	4,210.000 SY	3.56000		14,987.60	
0035	1330000000-E INCIDENTAL MILLING	280.000 SY	9.50000		2,660.00	
0036	1489000000-E ASPHALT CONC BASE COURSE, TYPE B25.0B	4,210.000 TON	53.00000		223,130.00	
0037	1498000000-E ASPHALT CONC INTERMEDIATE COURSE, TYPE I19.0B	4,100.000 TON	51.00000		209,100.00	
0038	1519000000-E ASPHALT CONC SURFACE COURSE, TYPE S9.5B	3,120.000 TON	46.00000		143,520.00	
0039	1575000000-E ASPHALT BINDER FOR PLANT MIX	640.000 TON	625.00000		400,000.00	
0040	1693000000-E ASPHALT PLANT MIX, PAVEMENT REPAIR	405.000 TON	150.00000		60,750.00	
0041	2022000000-E SUBDRAIN EXCAVATION	224.000 CY	17.00000		3,808.00	
0042	2033000000-E SUBDRAIN FINE AGGREGATE	168.000 CY	36.00000		6,048.00	
0043	2044000000-E 6" PERFORATED SUBDRAIN PIPE	1,000.000 LF	7.25000		7,250.00	
0044	2070000000-N SUBDRAIN PIPE OUTLET	2.000 EA	425.00000		850.00	
0045	2077000000-E 6" OUTLET PIPE	12.000 LF	14.00000		168.00	

Contract ID: C203175 Project(s): STP-0086(5)
Letting Date: 10-16-12 Call Order: 013
Bidder: 3752 - Triangle Grading and Paving, Inc

Line No.	Item Description	Approx. Quantity and Units	Unit Price Dollars	Unit Price Cts	Bid Amount Dollars	Bid Amount Ct
0046	2209000000-E ENDWALLS	4.500 CY	850.00000		3,825.00	
0047	2253000000-E PIPE COLLARS	1.009 CY	1,000.00000		1,009.00	
0048	2264000000-E PIPE PLUGS	0.882 CY	1,000.00000		882.00	
0049	2275000000-E FLOWABLE FILL	40.300 CY	145.00000		5,843.50	
0050	2286000000-N MASONRY DRAINAGE STRUCTURES	76.000 EA	1,080.00000		82,080.00	
0051	2308000000-E MASONRY DRAINAGE STRUCTURES	31.600 LF	250.00000		7,900.00	
0052	2364000000-N FRAME WITH TWO GRATES, STD 840.16	15.000 EA	450.00000		6,750.00	
0053	2366000000-N FRAME WITH TWO GRATES, STD 840.24	1.000 EA	420.00000		420.00	
0054	2374000000-N FRAME WITH GRATE & HOOD, STD 840.03, TYPE ** (E)	2.000 EA	525.00000		1,050.00	
0055	2374000000-N FRAME WITH GRATE & HOOD, STD 840.03, TYPE ** (F)	26.000 EA	525.00000		13,650.00	
0056	2374000000-N FRAME WITH GRATE & HOOD, STD 840.03, TYPE ** (G)	23.000 EA	525.00000		12,075.00	
0057	2396000000-N FRAME WITH COVER, STD 840.54	7.000 EA	350.00000		2,450.00	

Contract ID: C203175 Project(s): STP-0086(5)
Letting Date: 10-16-12 Call Order: 013
Bidder: 3752 - Triangle Grading and Paving, Inc

Line No.	Item Description	Approx. Quantity and Units	Unit Price Dollars	Unit Price Cts	Bid Amount Dollars	Bid Amount Ct
0058	2535000000-E **"X **" CONCRETE CURB (9" X 18")	120.000 LF	18.00000		2,160.00	
0059	2549000000-E 2'-6" CONCRETE CURB & GUTTER	7,830.000 LF	12.00000		93,960.00	
0060	2577000000-E CONCRETE EXPRESSWAY GUTTER	30.000 LF	25.00000		750.00	
0061	2591000000-E 4" CONCRETE SIDEWALK	3,410.000 SY	25.00000		85,250.00	
0062	2600000000-N RETROFIT EXISTING CURB RAMP	1.000 EA	700.00000		700.00	
0063	2605000000-N CONCRETE CURB RAMP	38.000 EA	925.00000		35,150.00	
0064	2612000000-E 6" CONCRETE DRIVEWAY	180.000 SY	45.00000		8,100.00	
0065	2655000000-E 5" MONOLITHIC CONCRETE ISLANDS(KEYED IN)	70.000 SY	45.00000		3,150.00	
0066	2738000000-E GENERIC PAVING ITEM REMOVE AND RESET BRICK SIDE- WALK	720.000 SY	25.00000		18,000.00	
0067	2830000000-N ADJUSTMENT OF MANHOLES	10.000 EA	400.00000		4,000.00	
0068	3575000000-E GENERIC FENCING ITEM TEMPORARY 72" CHAIN LINK FENCE	2,000.000 LF	12.25000		24,500.00	
0069	3628000000-E RIP RAP, CLASS I	360.000 TON	32.00000		11,520.00	

Contract ID: C203175 Project(s): STP-0086(5)
Letting Date: 10-16-12 Call Order: 013
Bidder: 3752 - Triangle Grading and Paving, Inc

Line No.	Item Description	Approx. Quantity and Units	Unit Price Dollars	Unit Price Cts	Bid Amount Dollars	Bid Amount Ct
0070	3649000000-E RIP RAP, CLASS B	20.000 TON	46.00000		920.00	
0071	3656000000-E GEOTEXTILE FOR DRAINAGE	3,230.000 SY	1.50000		4,845.00	
0072	4072000000-E SUPPORTS, 3-LB STEEL U-CHANNEL	890.000 LF	4.95000		4,405.50	
0073	4096000000-N SIGN ERECTION, TYPE D	1.000 EA	95.00000		95.00	
0074	4102000000-N SIGN ERECTION, TYPE E	44.000 EA	55.00000		2,420.00	
0075	4108000000-N SIGN ERECTION, TYPE F	5.000 EA	95.00000		475.00	
0076	4155000000-N DISPOSAL OF SIGN SYSTEM, U- CHANNEL	61.000 EA	0.50000		30.50	
0077	4400000000-E WORK ZONE SIGNS (STATIONARY)	675.000 SF	3.85000		2,598.75	
0078	4405000000-E WORK ZONE SIGNS (PORTABLE)	890.000 SF	10.39000		9,247.10	
0079	4410000000-E WORK ZONE SIGNS (BARRICADE MOUNTED)	61.000 SF	7.25000		442.25	
0080	4415000000-N FLASHING ARROW BOARD	2.000 EA	2,900.00000		5,800.00	
0081	4420000000-N PORTABLE CHANGEABLE MESSAGE SIGN	4.000 EA	14,000.00000		56,000.00	

Contract ID: C203175 Project(s): STP-0086(5)
Letting Date: 10-16-12 Call Order: 013
Bidder: 3752 - Triangle Grading and Paving, Inc

Line No.	Item Description	Approx. Quantity and Units	Unit Price Dollars	Unit Price Cts	Bid Amount Dollars	Bid Amount Ct
0082	4430000000-N DRUMS	58.000 EA	48.00000		2,784.00	
0083	4445000000-E BARRICADES (TYPE III)	356.000 LF	19.00000		6,764.00	
0084	4455000000-N FLAGGER	660.000 DAY	180.00000		118,800.00	
0085	4480000000-N TMA	2.000 EA	12,500.00000		25,000.00	
0086	4507000000-E WATER FILLED BARRIER	2,211.000 LF	42.50000		93,967.50	
0087	4508000000-E RESET WATER FILLED BARRIER	3,887.000 LF	3.00000		11,661.00	
0088	4516000000-N SKINNY DRUM	270.000 EA	33.00000		8,910.00	
0089	4685000000-E THERMOPLAST IC PAVEMENT MARKINGLINES (4", 90 MILS)	7,380.000 LF	0.55000		4,059.00	
0090	4686000000-E THERMOPLAST IC PAVEMENT MARKING LINES (4", 120 MILS)	11,560.000 LF	0.60000		6,936.00	
0091	4695000000-E THERMOPLAST IC PAVEMENT MARKINGLINES (8", 90 MILS)	500.000 LF	1.70000		850.00	
0092	4710000000-E THERMOPLAST IC PAVEMENT MARKINGLINES (24", 120 MILS)	2,180.000 LF	6.00000		13,080.00	

Contract ID: C203175 Project(s): STP-0086(5)
Letting Date: 10-16-12 Call Order: 013
Bidder: 3752 - Triangle Grading and Paving, Inc

Line No.	Item Description	Approx. Quantity and Units	Unit Price Dollars	Unit Price Cts	Bid Amount Dollars	Bid Amount Ct
0093	4721000000-E THERMOPLASTIC PAVEMENT MARKINGCHARACTER (120 MILS)	33.000 EA	100.00000		3,300.00	
0094	4725000000-E THERMOPLASTIC PAVEMENT MARKINGSYMBOL (90 MILS)	142.000 EA	100.00000		14,200.00	
0095	4810000000-E PAINT PAVEMENT MARKING LINES (4")	63,200.000 LF	0.25000		15,800.00	
0096	4820000000-E PAINT PAVEMENT MARKING LINES (8")	1,430.000 LF	1.00000		1,430.00	
0097	4835000000-E PAINT PAVEMENT MARKING LINES (24")	2,650.000 LF	2.00000		5,300.00	
0098	4840000000-N PAINT PAVEMENT MARKING CHARAC-TER	57.000 EA	50.00000		2,850.00	
0099	4845000000-N PAINT PAVEMENT MARKING SYMBOL	201.000 EA	50.00000		10,050.00	
0100	4850000000-E REMOVAL OF PAVEMENT MARKING LINES (4")	10,900.000 LF	0.60000		6,540.00	
0101	4860000000-E REMOVAL OF PAVEMENT MARKING LINES (8")	100.000 LF	1.00000		100.00	
0102	4870000000-E REMOVAL OF PAVEMENT MARKING LINES (24")	70.000 LF	4.00000		280.00	
0103	4875000000-N REMOVAL OF PAVEMENT MARKING SYMBOLS & CHARACTERS	25.000 EA	50.00000		1,250.00	

Contract ID: C203175 Project(s): STP-0086(5)
Letting Date: 10-16-12 Call Order: 013
Bidder: 3752 - Triangle Grading and Paving, Inc

Line No.	Item Description	Approx. Quantity and Units	Unit Price Dollars	Unit Price Cts	Bid Amount Dollars	Bid Amount Ct
0104	5255000000-N PORTABLE LIGHTING	LUMP	LUMP		11,000.00	
0105	5325200000-E 2" WATER LINE	93.000 LF	32.00000		2,976.00	
0106	5325800000-E 8" WATER LINE	859.000 LF	64.35000		55,276.65	
0107	5326200000-E 12" WATER LINE	3,969.000 LF	80.00000		317,520.00	
0108	5546000000-E 8" VALVE	12.000 EA	1,600.00000		19,200.00	
0109	5558000000-E 12" VALVE	24.000 EA	2,860.00000		68,640.00	
0110	5648000000-N RELOCATE WATER METER	33.000 EA	1,350.00000		44,550.00	
0111	5649000000-N RECONNECT WATER METER	2.000 EA	1,200.00000		2,400.00	
0112	5672000000-N RELOCATE FIRE HYDRANT	6.000 EA	2,625.00000		15,750.00	
0113	5768000000-N SANITARY SEWER CLEAN-OUT	5.000 EA	950.00000		4,750.00	
0114	5801000000-E ABANDON 8" UTILITY PIPE	3,063.000 LF	8.50000		26,035.50	
0115	5804000000-E ABANDON 12" UTILITY PIPE	1,580.000 LF	8.50000		13,430.00	

Contract ID: C203175 Project(s): STP-0086(5)
Letting Date: 10-16-12 Call Order: 013
Bidder: 3752 - Triangle Grading and Paving, Inc

Line No.	Item Description	Approx. Quantity and Units	Unit Price Dollars	Unit Price Cts	Bid Amount Dollars	Bid Amount Ct
0116	5871500000-E TRENCHLESS INSTALLATION OF 8" IN SOIL	100.000 LF	200.00000		20,000.00	
0117	5871510000-E TRENCHLESS INSTALLATION OF 8" NOT IN SOIL	100.000 LF	480.00000		48,000.00	
0118	5871700000-E TRENCHLESS INSTALLATION OF 12"IN SOIL	47.000 LF	210.00000		9,870.00	
0119	5871710000-E TRENCHLESS INSTALLATION OF 12"NOT IN SOIL	47.000 LF	495.00000		23,265.00	
0120	6000000000-E TEMPORARY SILT FENCE	6,730.000 LF	1.74000		11,710.20	
0121	6006000000-E STONE FOR EROSION CONTROL, CLASS A	1,320.000 TON	30.00000		39,600.00	
0122	6009000000-E STONE FOR EROSION CONTROL, CLASS B	280.000 TON	33.00000		9,240.00	
0123	6012000000-E SEDIMENT CONTROL STONE	820.000 TON	27.00000		22,140.00	
0124	6015000000-E TEMPORARY MULCHING	10.000 ACR	750.00000		7,500.00	
0125	6018000000-E SEED FOR TEMPORARY SEEDING	300.000 LB	4.00000		1,200.00	
0126	6021000000-E FERTILIZER FOR TEMPORARY SEED-ING	2.250 TON	1,025.00000		2,306.25	
0127	6024000000-E TEMPORARY SLOPE DRAINS	200.000 LF	11.00000		2,200.00	

Contract ID: C203175 Project(s): STP-0086(5)
Letting Date: 10-16-12 Call Order: 013
Bidder: 3752 - Triangle Grading and Paving, Inc

Line No.	Item Description	Approx. Quantity and Units	Unit Price Dollars	Unit Price Cts	Bid Amount Dollars	Bid Amount Ct
0128	6029000000-E SAFETY FENCE	100.000 LF	1.74000		174.00	
0129	6030000000-E SILT EXCAVATION	1,360.000 CY	5.50000		7,480.00	
0130	6036000000-E MATTING FOR EROSION CONTROL	10,000.000 SY	1.20000		12,000.00	
0131	6037000000-E COIR FIBER MAT	25.000 SY	10.00000		250.00	
0132	6038000000-E PERMANENT SOIL REINFORCEMENT MAT	3,225.000 SY	4.95000		15,963.75	
0133	6042000000-E 1/4" HARDWARE CLOTH	3,275.000 LF	3.20000		10,480.00	
0134	6071030000-E COIR FIBER BAFFLE	250.000 LF	5.00000		1,250.00	
0135	6071050000-E **" SKIMMER (2")	1.000 EA	850.00000		850.00	
0136	6084000000-E SEEDING & MULCHING	6.000 ACR	1,650.00000		9,900.00	
0137	6087000000-E MOWING	4.500 ACR	65.00000		292.50	
0138	6090000000-E SEED FOR REPAIR SEEDING	100.000 LB	6.00000		600.00	
0139	6093000000-E FERTILIZER FOR REPAIR SEEDING	0.250 TON	1,100.00000		275.00	

Contract ID: C203175 Project(s): STP-0086(5)
Letting Date: 10-16-12 Call Order: 013
Bidder: 3752 - Triangle Grading and Paving, Inc

Line No.	Item Description	Approx. Quantity and Units	Unit Price Dollars	Unit Price Cts	Bid Amount Dollars	Bid Amount Ct
0140	6096000000-E SEED FOR SUPPLEMENTAL SEEDING	225.000 LB	7.25000		1,631.25	
0141	6108000000-E FERTILIZER TOPDRESSING	6.250 TON	1,100.00000		6,875.00	
0142	6114500000-N SPECIALIZED HAND MOWING	25.000 MHR	60.00000		1,500.00	
0143	6117000000-N RESPONSE FOR EROSION CONTROL	75.000 EA	100.00000		7,500.00	
0144	7000000000-E PEDESTRIAN SIGNAL HEAD (**", ** SECTION) (16", 1 SECTION W/ COUNTDOWN)	8.000 EA	940.00000		7,520.00	
0145	7060000000-E SIGNAL CABLE	3,500.000 LF	2.50000		8,750.00	
0146	7120000000-E VEHICLE SIGNAL HEAD (12", 3 SECTION)	11.000 EA	765.00000		8,415.00	
0147	7132000000-E VEHICLE SIGNAL HEAD (12", 4 SECTION)	2.000 EA	975.00000		1,950.00	
0148	7144000000-E VEHICLE SIGNAL HEAD (12", 5 SECTION)	4.000 EA	1,305.00000		5,220.00	
0149	7229000000-N APS DETECTOR STATION	16.000 EA	720.00000		11,520.00	
0150	7230000000-N CENTRAL CONTROL UNIT APS DETECTOR STATION	2.000 EA	3,700.00000		7,400.00	

Contract ID: C203175 Project(s): STP-0086(5)
Letting Date: 10-16-12 Call Order: 013
Bidder: 3752 - Triangle Grading and Paving, Inc

Line No.	Item Description	Approx. Quantity and Units	Unit Price Dollars	Unit Price Cts	Bid Amount Dollars	Bid Amount Ct
0151	7252000000-E MESSENGER CABLE (1/4")	250.000 LF	1.20000		300.00	
0152	7264000000-E MESSENGER CABLE (3/8")	420.000 LF	3.00000		1,260.00	
0153	7300000000-E UNPAVED TRENCHING (**********) (1, 2")	430.000 LF	5.25000		2,257.50	
0154	7300100000-E UNPAVED TRENCHING FOR TEMP-ORARY LEAD-IN	430.000 LF	2.90000		1,247.00	
0155	7324000000-N JUNCTION BOX (STANDARD SIZE)	8.000 EA	315.00000		2,520.00	
0156	7360000000-N WOOD POLE	4.000 EA	945.00000		3,780.00	
0157	7372000000-N GUY ASSEMBLY	9.000 EA	235.00000		2,115.00	
0158	7396000000-E 1/2" RISER WITH WEATHERHEAD	3.000 EA	160.00000		480.00	
0159	7408000000-E 1" RISER WITH WEATHERHEAD	1.000 EA	470.00000		470.00	
0160	7420000000-E 2" RISER WITH WEATHERHEAD	8.000 EA	370.00000		2,960.00	
0161	7432000000-E 2" RISER WITH HEAT SHRINK TUBING	1.000 EA	390.00000		390.00	
0162	7444000000-E INDUCTIVE LOOP SAWCUT	3,870.000 LF	4.65000		17,995.50	

Contract ID: C203175 Project(s): STP-0086(5)
Letting Date: 10-16-12 Call Order: 013
Bidder: 3752 - Triangle Grading and Paving, Inc

Line No.	Item Description	Approx. Quantity and Units	Unit Price Dollars	Unit Price Cts	Bid Amount Dollars	Bid Amount Ct
0163	7456000000-E LEAD-IN CABLE (**********) (14-2)	6,260.000 LF	1.35000		8,451.00	
0164	7552000000-N INTERCONNECT CENTER	1.000 EA	1,715.00000		1,715.00	
0165	7575180000-N CABLE TRANSFER	2.000 EA	105.00000		210.00	
0166	7636000000-N SIGN FOR SIGNALS	3.000 EA	290.00000		870.00	
0167	7642100000-N TYPE I POST WITH FOUNDATION	16.000 EA	1,020.00000		16,320.00	
0168	7768000000-N CONTROLLER WITH CABINET (TYPE 2070L, POLE MOUNTED)	1.000 EA	11,800.00000		11,800.00	
0169	7780000000-N DETECTOR CARD (TYPE 2070L)	7.000 EA	125.00000		875.00	
0170 AA1	0241000000-E GENERIC GRADING ITEM GEOGRID	6,000.000 SY	0.00000		0.00	
0171 AA1	0241000000-E GENERIC GRADING ITEM NONWOVEN SEPARATION GEOTEXTILE	6,000.000 SY	0.00000		0.00	
0172 AA2	0241000000-E GENERIC GRADING ITEM HIGH STRENGTH GEOTEXTILE	6,000.000 SY	3.25000		19,500.00	
	Section 0001 Total				4,565,146.64	
	Bid Total				4,565,146.64	

NON-COLLUSION AND DEBARMENT CERTIFICATION

The bidder certifies that neither he, nor any official, agent or employee of the bidder has entered into any agreement, participated in any collusion, or otherwise taken any action which is in restraint of free competitive bidding in connection with this bid, and that the bidder intends to do the work with its own bonafide employees or subcontractors and is not bidding for the benefit of another contractor. In addition, submitting this electronic bid constitutes the bidder's certification of Status under penalty of perjury under the laws of the United States and in accordance with the Debarment Certification on file with the Department.

By submitting this bid, the bidder certifies to the best of his knowledge and belief that he and his principals:

a. Are not presently debarred, suspended, proposed for debarment, declared ineligible, or voluntarily excluded from covered transactions by any Federal department or agency;

b. Have not within a three-year period preceding this proposal been convicted of or had a civil judgment rendered against them for commission of fraud or a criminal offense in connection with obtaining, attempting to obtain, or performing a public (Federal, State or local) transaction or contract under a public transaction; violation of Federal or State antitrust statutes or commission of embezzlement, theft, forgery, bribery, falsification or destruction of records; making false statements; or receiving stolen property;

c. Are not presently indicted for or otherwise criminally or civilly charged by a governmental entity (Federal, State or local) with commission of any of the offenses enumerated in paragraph b. of this certification; and

d. Have not within a three-year period preceding this proposal had one or more public transactions (Federal, State or local) terminated for cause or default.

Where the prospective bidder is unable to certify to any of the statements in this certification, the bidder shall submit an explanation in the blanks provided herein. The explanation will not necessarily result in denial of participation in a contract.

Explanation:
NOT ANSWERED
NOT ANSWERED
NOT ANSWERED
NOT ANSWERED

If the prequalified bidder's status changes, he shall immediately submit a new fully executed non-collusion affidavit and debarment certification with an explanation of the change to the Contract Office prior to submitting the bid.

Failure to furnish a certification or an explanation will be grounds for rejection of a bid

AWARD LIMITS ON MULTIPLE PROJECTS

By answering YES to this statement, the bidder acknowleges that they are using the award limits on multiple projects. No

A bidder who desires to bid on more than one project on which bids are to be opened on the same date, and who also desires to avoid receiving an award of more projects than he is equipped to handle, may bid on any number of projects but may limit the total amount of work awarded to him on selected projects by completing the AWARD LIMITS ON MULTIPLE PROJECTS.

The Award Limits on Multiple Projects must be filled in on each project bid for which the Bidder desires protection.

It is the desire of the Bidder to be awarded contracts, the value of which

will not exceed a total of NOT ANSWERED for those

projects indicated herein, for which bids will be opened on (MM/DD/YY)

The Award Limits shall apply to the following projects:

Contract Number	County
NOT ANSWERED	
NOT ANSWERED	
NOT ANSWERED	
NOT ANSWERED	
NOT ANSWERED	
NOT ANSWERED	

It is agreed that if I am (we are) the low Bidder(s) on indicated projects, the total value of which is more than the above stipulated award limits, the Board of Transportation will award me (us) projects from among those indicated that have a total value not to exceed the award limit and will result in the lowest total bids to the Department of Transportation.

PROPOSAL: C203175
LETTING: L121016 CALL: 013
VENDOR: 3752 Triangle Grading and Paving, Inc

LINE NO.	ITEM NO.	ITEM DESC.	UNIT TYPE	SUBCONTRACTOR QUANTITY	SUBCONTRACTOR UNIT PRICE	EXTENDED AMOUNT
DBE SUBCONTRACTOR: 2976 CAROLINA ENVIRONMENTAL CONTRACTING, INC.						
Will Use Quote: Yes						
0120	6000000000-E	TEMPORARY SI	LF	6730.000	1.74000	11710.20
0128	6029000000-E	SAFETY FENCE	LF	100.000	1.74000	174.00
0133	6042000000-E	1/4" HARDWAR	LF	3275.000	3.20000	10480.00
0134	6071030000-E	COIR FIBER B	LF	250.000	5.00000	1250.00
		DBE COMMITMENT TOTAL FOR SUBCONTRACTOR:				23,614.20 Committed
		DBE COMMITMENT TOTAL FOR VENDOR (SubContractor)				23,614.
DBE SUBCONTRACTOR: 11572 CRUZ BROTHERS CONCRETE, INC.						
Will Use Quote: Yes						
0058	2535000000-E	**"X**" CONC	LF	120.000	18.00000	2160.00
0059	2549000000-E	2'-6" CONC C	LF	7830.000	12.00000	93960.00
0060	2577000000-E	CONC EXPRESS	LF	30.000	25.00000	750.00
0061	2591000000-E	4" CONCRETE	SY	3410.000	25.00000	85250.00
0062	2600000000-N	RETROFIT EXT	EA	1.000	700.00000	700.00
0063	2605000000-N	CONCRETE CUR	EA	38.000	925.00000	35150.00
0064	2612000000-E	6" CONCRETE	SY	180.000	45.00000	8100.00
0065	2655000000-E	5" MONO CONC	SY	70.000	45.00000	3150.00
		DBE COMMITMENT TOTAL FOR SUBCONTRACTOR:				229,220.00 Committed
		DBE COMMITMENT TOTAL FOR VENDOR (SubContractor)				229,220
DBE SUBCONTRACTOR: 12814 GARNER-MURPHY CONSTRUCTION, INC.						
Will Use Quote: Yes						
0029	1099500000-E	SHALLOW UNDE	CY	2000.000	4.00000	8000.00
Haul Only- Haul matertial offsite						
0030	1099700000-E	CLASS IV SUB	TON	4000.000	3.25000	13000.00
haul only						
0031	1110000000-E	STABILIZER A	TON	500.000	3.25000	1625.00
haul only						
0005	0134000000-E	DRAINAGE DIT	CY	1720.000	3.25000	5590.00
haul only						
0002	0043000000-N	GRADING	LS	1.000	98000.00000	98000.00
Haul only- Onsite and borrow haul @$65/ hour						
		DBE COMMITMENT TOTAL FOR SUBCONTRACTOR:				126,215.00 Committed
		DBE COMMITMENT TOTAL FOR VENDOR (SubContractor)				126,215
DBE SUBCONTRACTOR: 4761 TRAFFIC CONTROL SAFETY SERVICES, INC.						
Will Use Quote: Yes						
0072	4072000000-E	SUPPORT, 3-L	LF	890.000	4.95000	4405.50

LINE NO.	ITEM NO.	ITEM DESC.	UNIT TYPE	SUBCONTRACTOR QUANTITY	SUBCONTRACTOR UNIT PRICE	EXTENDED AMOUNT
0073	4096000000-N	SIGN ERECTIO	EA	1.000	95.00000	95.00
0074	4102000000-N	SIGN ERECTIO	EA	44.000	55.00000	2420.00
0076	4155000000-N	DISPOSE SIGN	EA	61.000	0.50000	30.50
0075	4108000000-N	SIGN ERECTIO	EA	5.000	95.00000	475.00
0077	4400000000-E	WORK ZONE SI	SF	675.000	3.85000	2598.75
0079	4410000000-E	WORK ZONE SI	SF	61.000	7.25000	442.25
0083	4445000000-E	BARRICADES (	LF	356.000	19.00000	6764.00
0087	4508000000-E	RESET WATER	LF	3887.000	3.00000	11661.00
0086	4507000000-E	WATER FILLED	LF	2211.000	42.50000	93967.50

DBE COMMITMENT TOTAL FOR SUBCONTRACTOR: 122,859.50 Committed
DBE COMMITMENT TOTAL FOR VENDOR (SubContractor) 122,859

DBE SUBCONTRACTOR: 11151 BRIGHTSTAR LANDSCAPING LLC.
Will Use Quote: Yes

0124	6015000000-E	TEMPORARY MU	ACR	10.000	750.00000	7500.00
0125	6018000000-E	SEED FOR TEM	LB	300.000	4.00000	1200.00
0126	6021000000-E	FERT FOR TEM	TON	2.250	1025.00000	2306.25
0130	6036000000-E	MATTING FOR	SY	10000.000	1.20000	12000.00
0132	6038000000-E	PERM SOIL RE	SY	3225.000	4.95000	15963.75
0136	6084000000-E	SEEDING AND	ACR	6.000	1650.00000	9900.00
0137	6087000000-E	MOWING	ACR	4.500	65.00000	292.50
0138	6090000000-E	SEED FOR REP	LB	100.000	6.00000	600.00
0139	6093000000-E	FERT FOR REP	TON	0.250	1100.00000	275.00
0140	6096000000-E	SEED FOR SUP	LB	225.000	7.25000	1631.25
0141	6108000000-E	FERTILIZER T	TON	6.250	1100.00000	6875.00
0142	6114500000-N	SPECIALIZED	MHR	25.000	60.00000	1500.00
0143	6117000000-N	RESPONSE FOR	EA	75.000	100.00000	7500.00

DBE COMMITMENT TOTAL FOR SUBCONTRACTOR: 67,543.75 Committed
DBE COMMITMENT TOTAL FOR VENDOR (SubContractor) 67,543.

DBE SUBCONTRACTOR: 4898 BULLINGTON CONSTRUCTION INC
Will Use Quote: Yes

0068	3575000000-E	GENERIC FENC	LF	2000.000	12.25000	24500.00

DBE COMMITMENT TOTAL FOR SUBCONTRACTOR: 24,500.00 Committed
DBE COMMITMENT TOTAL FOR VENDOR (SubContractor) 24,500.

TOTAL DBE COMMITMENT FOR VENDOR: Entered: 13.01% or 593952.45
Required: 13.00% or 593469.06
<GOAL MET>

Contract Item Sheets For C203175

Line #	ItemNumber	Sec #	Description	Quantity Unit	Unit Bid Price	Amount Bid
			ROADWAY ITEMS			
0001	0000100000-N	800	MOBILIZATION	Lump Sum LS	205,000.00	205,000.00
0002	0043000000-N	226	GRADING	Lump Sum LS	916,627.00	916,627.00
0003	0050000000-E	226	SUPPLEMENTARY CLEARING & GRUBBING	1 ACR	3,500.00	3,500.00
0004	0057000000-E	226	UNDERCUT EXCAVATION	350 CY	28.00	9,800.00
0005	0134000000-E	240	DRAINAGE DITCH EXCAVATION	1,720 CY	11.00	18,920.00
0006	0195000000-E	265	SELECT GRANULAR MATERIAL	250 CY	22.00	5,500.00
0007	0196000000-E	270	GEOTEXTILE FOR SOIL STABILIZATION	450 SY	4.00	1,800.00
0008	0234000000-E	SP	GENERIC GRADING ITEM EXCAVATION AND STOCKPILING CONTAMINATED SOIL	100 CY	40.00	4,000.00
0009	0318000000-E	300	FOUNDATION CONDITIONING MATERIAL, MINOR STRUCTURES	740 TON	35.00	25,900.00
0010	0320000000-E	300	FOUNDATION CONDITIONING GEOTEXTILE	1,680 SY	2.50	4,200.00
0011	0366000000-E	310	15" RC PIPE CULVERTS, CLASS III	76 LF	39.00	2,964.00
0012	0384000000-E	310	30" RC PIPE CULVERTS, CLASS III	36 LF	75.28	2,710.08
0013	0396000000-E	310	42" RC PIPE CULVERTS, CLASS III	172 LF	133.00	22,876.00
0014	0448200000-E	310	15" RC PIPE CULVERTS, CLASS IV	1,932 LF	30.50	58,926.00
0015	0448300000-E	310	18" RC PIPE CULVERTS, CLASS IV	358 LF	37.22	13,324.76
0016	0448400000-E	310	24" RC PIPE CULVERTS, CLASS IV	1,420 LF	48.00	68,160.00
0017	0448500000-E	310	30" RC PIPE CULVERTS, CLASS IV	556 LF	63.00	35,028.00
0018	0582000000-E	310	15" CS PIPE CULVERTS, 0.064" THICK	16 LF	53.00	848.00

Contract Item Sheets For C203175

Line #	ItemNumber	Sec #	Description	Quantity Unit	Unit Bid Price	Amount Bid
0019	0594000000-E	310	24" CS PIPE CULVERTS, 0.064" THICK	52 LF	57.00	2,964.00
0020	0600000000-E	310	30" CS PIPE CULVERTS, 0.079" THICK	332 LF	61.00	20,252.00
0021	0636000000-E	310	*** CS PIPE ELBOWS, ****** THICK (15", 0.064")	2 EA	200.00	400.00
0022	0636000000-E	310	*** CS PIPE ELBOWS, ****** THICK (24", 0.064")	2 EA	575.00	1,150.00
0023	0636000000-E	310	*** CS PIPE ELBOWS, ****** THICK (30", 0.079")	2 EA	795.00	1,590.00
0024	0973100000-E	330	*** WELDED STEEL PIPE, ***** THICK, GRADE B IN SOIL (42", 0.625", B)	40 LF	348.00	13,920.00
0025	0973300000-E	330	*** WELDED STEEL PIPE, ***** THICK, GRADE B NOT IN SOIL (42", 0.625", B)	40 LF	890.00	35,600.00
0026	0986000000-E	SP	GENERIC PIPE ITEM TEMPORARY 12" PLASTIC CORRUGATED PIPE	32 LF	42.00	1,344.00
0027	0995000000-E	340	PIPE REMOVAL	920.4 LF	11.00	10,124.40
0028	1077000000-E	SP	#57 STONE	40 TON	60.74	2,429.60
0029	1099500000-E	505	SHALLOW UNDERCUT	2,000 CY	11.00	22,000.00
0030	1099700000-E	505	CLASS IV SUBGRADE STABILIZA-TION	4,000 TON	16.00	64,000.00
0031	1110000000-E	510	STABILIZER AGGREGATE	500 TON	21.00	10,500.00
0032	1220000000-E	545	INCIDENTAL STONE BASE	1,500 TON	22.00	33,000.00
0033	1297000000-E	607	MILLING ASPHALT PAVEMENT, **** DEPTH (1-1/2")	880 SY	6.00	5,280.00
0034	1308000000-E	607	MILLING ASPHALT PAVEMENT, **** TO ******* (0" TO 3")	4,210 SY	3.56	14,987.60

Contract Item Sheets For C203175

Line #	ItemNumber	Sec #	Description	Quantity Unit	Unit Bid Price	Amount Bid
0035	1330000000-E	607	INCIDENTAL MILLING	280 SY	9.50	2,660.00
0036	1489000000-E	610	ASPHALT CONC BASE COURSE, TYPE B25.0B	4,210 TON	53.00	223,130.00
0037	1498000000-E	610	ASPHALT CONC INTERMEDIATE COURSE, TYPE I19.0B	4,100 TON	51.00	209,100.00
0038	1519000000-E	610	ASPHALT CONC SURFACE COURSE, TYPE S9.5B	3,120 TON	46.00	143,520.00
0039	1575000000-E	620	ASPHALT BINDER FOR PLANT MIX	640 TON	625.00	400,000.00
0040	1693000000-E	654	ASPHALT PLANT MIX, PAVEMENT REPAIR	405 TON	150.00	60,750.00
0041	2022000000-E	815	SUBDRAIN EXCAVATION	224 CY	17.00	3,808.00
0042	2033000000-E	815	SUBDRAIN FINE AGGREGATE	168 CY	36.00	6,048.00
0043	2044000000-E	815	6" PERFORATED SUBDRAIN PIPE	1,000 LF	7.25	7,250.00
0044	2070000000-N	815	SUBDRAIN PIPE OUTLET	2 EA	425.00	850.00
0045	2077000000-E	815	6" OUTLET PIPE	12 LF	14.00	168.00
0046	2209000000-E	838	ENDWALLS	4.5 CY	850.00	3,825.00
0047	2253000000-E	840	PIPE COLLARS	1.009 CY	1,000.00	1,009.00
0048	2264000000-E	840	PIPE PLUGS	0.882 CY	1,000.00	882.00
0049	2275000000-E	SP	FLOWABLE FILL	40.3 CY	145.00	5,843.50
0050	2286000000-N	840	MASONRY DRAINAGE STRUCTURES	76 EA	1,080.00	82,080.00
0051	2308000000-E	840	MASONRY DRAINAGE STRUCTURES	31.6 LF	250.00	7,900.00
0052	2364000000-N	840	FRAME WITH TWO GRATES, STD 840.16	15 EA	450.00	6,750.00
0053	2366000000-N	840	FRAME WITH TWO GRATES, STD 840.24	1 EA	420.00	420.00

Contract Item Sheets For C203175

Line #	ItemNumber	Sec #	Description	Quantity Unit	Unit Bid Price	Amount Bid
0054	2374000000-N	840	FRAME WITH GRATE & HOOD, STD 840.03, TYPE ** (E)	2 EA	525.00	1,050.00
0055	2374000000-N	840	FRAME WITH GRATE & HOOD, STD 840.03, TYPE ** (F)	26 EA	525.00	13,650.00
0056	2374000000-N	840	FRAME WITH GRATE & HOOD, STD 840.03, TYPE ** (G)	23 EA	525.00	12,075.00
0057	2396000000-N	840	FRAME WITH COVER, STD 840.54	7 EA	350.00	2,450.00
0058	2535000000-E	846	**"X **" CONCRETE CURB (9" X 18")	120 LF	18.00	2,160.00
0059	2549000000-E	846	2'-6" CONCRETE CURB & GUTTER	7,830 LF	12.00	93,960.00
0060	2577000000-E	846	CONCRETE EXPRESSWAY GUTTER	30 LF	25.00	750.00
0061	2591000000-E	848	4" CONCRETE SIDEWALK	3,410 SY	25.00	85,250.00
0062	2600000000-N	SP	RETROFIT EXISTING CURB RAMP	1 EA	700.00	700.00
0063	2605000000-N	848	CONCRETE CURB RAMP	38 EA	925.00	35,150.00
0064	2612000000-E	848	6" CONCRETE DRIVEWAY	180 SY	45.00	8,100.00
0065	2655000000-E	852	5" MONOLITHIC CONCRETE ISLANDS (KEYED IN)	70 SY	45.00	3,150.00
0066	2738000000-E	SP	GENERIC PAVING ITEM REMOVE AND RESET BRICK SIDE-WALK	720 SY	25.00	18,000.00
0067	2830000000-N	858	ADJUSTMENT OF MANHOLES	10 EA	400.00	4,000.00
0068	3575000000-E	SP	GENERIC FENCING ITEM TEMPORARY 72" CHAIN LINK FENCE	2,000 LF	12.25	24,500.00
0069	3628000000-E	876	RIP RAP, CLASS I	360 TON	32.00	11,520.00
0070	3649000000-E	876	RIP RAP, CLASS B	20 TON	46.00	920.00
0071	3656000000-E	876	GEOTEXTILE FOR DRAINAGE	3,230 SY	1.50	4,845.00

Contract Item Sheets For C203175

Line #	ItemNumber	Sec #	Description	Quantity Unit	Unit Bid Price	Amount Bid
0072	4072000000-E	903	SUPPORTS, 3-LB STEEL U-CHANNEL	890 LF	4.95	4,405.50
0073	4096000000-N	904	SIGN ERECTION, TYPE D	1 EA	95.00	95.00
0074	4102000000-N	904	SIGN ERECTION, TYPE E	44 EA	55.00	2,420.00
0075	4108000000-N	904	SIGN ERECTION, TYPE F	5 EA	95.00	475.00
0076	4155000000-N	907	DISPOSAL OF SIGN SYSTEM, U-CHANNEL	61 EA	0.50	30.50
0077	4400000000-E	1110	WORK ZONE SIGNS (STATIONARY)	675 SF	3.85	2,598.75
0078	4405000000-E	1110	WORK ZONE SIGNS (PORTABLE)	890 SF	10.39	9,247.10
0079	4410000000-E	1110	WORK ZONE SIGNS (BARRICADE MOUNTED)	61 SF	7.25	442.25
0080	4415000000-N	1115	FLASHING ARROW BOARD	2 EA	2,900.00	5,800.00
0081	4420000000-N	1120	PORTABLE CHANGEABLE MESSAGE SIGN	4 EA	14,000.00	56,000.00
0082	4430000000-N	1130	DRUMS	58 EA	48.00	2,784.00
0083	4445000000-E	1145	BARRICADES (TYPE III)	356 LF	19.00	6,764.00
0084	4455000000-N	1150	FLAGGER	660 DAY	180.00	118,800.00
0085	4480000000-N	1165	TMA	2 EA	12,500.00	25,000.00
0086	4507000000-E	1170	WATER FILLED BARRIER	2,211 LF	42.50	93,967.50
0087	4508000000-E	1170	RESET WATER FILLED BARRIER	3,887 LF	3.00	11,661.00
0088	4516000000-N	1180	SKINNY DRUM	270 EA	33.00	8,910.00
0089	4685000000-E	1205	THERMOPLASTIC PAVEMENT MARKING LINES (4", 90 MILS)	7,380 LF	0.55	4,059.00
0090	4686000000-E	1205	THERMOPLASTIC PAVEMENT MARKING LINES (4", 120 MILS)	11,560 LF	0.60	6,936.00

Contract Item Sheets For C203175

Line #	ItemNumber	Sec #	Description	Quantity Unit	Unit Bid Price	Amount Bid
0091	4695000000-E	1205	THERMOPLASTIC PAVEMENT MARKING LINES (8", 90 MILS)	500 LF	1.70	850.00
0092	4710000000-E	1205	THERMOPLASTIC PAVEMENT MARKING LINES (24", 120 MILS)	2,180 LF	6.00	13,080.00
0093	4721000000-E	1205	THERMOPLASTIC PAVEMENT MARKING CHARACTER (120 MILS)	33 EA	100.00	3,300.00
0094	4725000000-E	1205	THERMOPLASTIC PAVEMENT MARKING SYMBOL (90 MILS)	142 EA	100.00	14,200.00
0095	4810000000-E	1205	PAINT PAVEMENT MARKING LINES (4")	63,200 LF	0.25	15,800.00
0096	4820000000-E	1205	PAINT PAVEMENT MARKING LINES (8")	1,430 LF	1.00	1,430.00
0097	4835000000-E	1205	PAINT PAVEMENT MARKING LINES (24")	2,650 LF	2.00	5,300.00
0098	4840000000-N	1205	PAINT PAVEMENT MARKING CHARAC-TER	57 EA	50.00	2,850.00
0099	4845000000-N	1205	PAINT PAVEMENT MARKING SYMBOL	201 EA	50.00	10,050.00
0100	4850000000-E	1205	REMOVAL OF PAVEMENT MARKING LINES (4")	10,900 LF	0.60	6,540.00
0101	4860000000-E	1205	REMOVAL OF PAVEMENT MARKING LINES (8")	100 LF	1.00	100.00
0102	4870000000-E	1205	REMOVAL OF PAVEMENT MARKING LINES (24")	70 LF	4.00	280.00
0103	4875000000-N	1205	REMOVAL OF PAVEMENT MARKING SYMBOLS & CHARACTERS	25 EA	50.00	1,250.00
0104	5255000000-N	1413	PORTABLE LIGHTING	Lump Sum LS	11,000.00	11,000.00
0105	5325200000-E	1510	2" WATER LINE	93 LF	32.00	2,976.00
0106	5325800000-E	1510	8" WATER LINE	859 LF	64.35	55,276.65
0107	5326200000-E	1510	12" WATER LINE	3,969 LF	80.00	317,520.00
0108	5546000000-E	1515	8" VALVE	12 EA	1,600.00	19,200.00

Contract Item Sheets For C203175

Line #	ItemNumber	Sec #	Description	Quantity Unit	Unit Bid Price	Amount Bid
0109	5558000000-E	1515	12" VALVE	24 EA	2,860.00	68,640.00
0110	5648000000-N	1515	RELOCATE WATER METER	33 EA	1,350.00	44,550.00
0111	5649000000-N	1515	RECONNECT WATER METER	2 EA	1,200.00	2,400.00
0112	5672000000-N	1515	RELOCATE FIRE HYDRANT	6 EA	2,625.00	15,750.00
0113	5768000000-N	1520	SANITARY SEWER CLEAN-OUT	5 EA	950.00	4,750.00
0114	5801000000-E	1530	ABANDON 8" UTILITY PIPE	3,063 LF	8.50	26,035.50
0115	5804000000-E	1530	ABANDON 12" UTILITY PIPE	1,580 LF	8.50	13,430.00
0116	5871500000-E	1550	TRENCHLESS INSTALLATION OF 8" IN SOIL	100 LF	200.00	20,000.00
0117	5871510000-E	1550	TRENCHLESS INSTALLATION OF 8" NOT IN SOIL	100 LF	480.00	48,000.00
0118	5871700000-E	1550	TRENCHLESS INSTALLATION OF 12" IN SOIL	47 LF	210.00	9,870.00
0119	5871710000-E	1550	TRENCHLESS INSTALLATION OF 12" NOT IN SOIL	47 LF	495.00	23,265.00
0120	6000000000-E	1605	TEMPORARY SILT FENCE	6,730 LF	1.74	11,710.20
0121	6006000000-E	1610	STONE FOR EROSION CONTROL, CLASS A	1,320 TON	30.00	39,600.00
0122	6009000000-E	1610	STONE FOR EROSION CONTROL, CLASS B	280 TON	33.00	9,240.00
0123	6012000000-E	1610	SEDIMENT CONTROL STONE	820 TON	27.00	22,140.00
0124	6015000000-E	1615	TEMPORARY MULCHING	10 ACR	750.00	7,500.00
0125	6018000000-E	1620	SEED FOR TEMPORARY SEEDING	300 LB	4.00	1,200.00
0126	6021000000-E	1620	FERTILIZER FOR TEMPORARY SEEDING	2.25 TON	1,025.00	2,306.25
0127	6024000000-E	1622	TEMPORARY SLOPE DRAINS	200 LF	11.00	2,200.00

Contract Item Sheets For C203175

Line #	ItemNumber	Sec #	Description	Quantity Unit	Unit Bid Price	Amount Bid
0128	6029000000-E	SP	SAFETY FENCE	100 LF	1.74	174.00
0129	6030000000-E	1630	SILT EXCAVATION	1,360 CY	5.50	7,480.00
0130	6036000000-E	1631	MATTING FOR EROSION CONTROL	10,000 SY	1.20	12,000.00
0131	6037000000-E	SP	COIR FIBER MAT	25 SY	10.00	250.00
0132	6038000000-E	SP	PERMANENT SOIL REINFORCEMENT MAT	3,225 SY	4.95	15,963.75
0133	6042000000-E	1632	1/4" HARDWARE CLOTH	3,275 LF	3.20	10,480.00
0134	6071030000-E	1640	COIR FIBER BAFFLE	250 LF	5.00	1,250.00
0135	6071050000-E	SP	*** SKIMMER (2")	1 EA	850.00	850.00
0136	6084000000-E	1660	SEEDING & MULCHING	6 ACR	1,650.00	9,900.00
0137	6087000000-E	1660	MOWING	4.5 ACR	65.00	292.50
0138	6090000000-E	1661	SEED FOR REPAIR SEEDING	100 LB	6.00	600.00
0139	6093000000-E	1661	FERTILIZER FOR REPAIR SEEDING	0.25 TON	1,100.00	275.00
0140	6096000000-E	1662	SEED FOR SUPPLEMENTAL SEEDING	225 LB	7.25	1,631.25
0141	6108000000-E	1665	FERTILIZER TOPDRESSING	6.25 TON	1,100.00	6,875.00
0142	6114500000-N	1667	SPECIALIZED HAND MOWING	25 MHR	60.00	1,500.00
0143	6117000000-N	SP	RESPONSE FOR EROSION CONTROL	75 EA	100.00	7,500.00
0144	7000000000-E	1705	PEDESTRIAN SIGNAL HEAD (***, ** SECTION) (16", 1 SECTION W/ COUNTDOWN)	8 EA	940.00	7,520.00
0145	7060000000-E	1705	SIGNAL CABLE	3,500 LF	2.50	8,750.00
0146	7120000000-E	1705	VEHICLE SIGNAL HEAD (12", 3 SECTION)	11 EA	765.00	8,415.00

Contract Item Sheets For C203175

Line #	ItemNumber	Sec #	Description	Quantity Unit	Unit Bid Price	Amount Bid
0147	7132000000-E	1705	VEHICLE SIGNAL HEAD (12", 4 SECTION)	2 EA	975.00	1,950.00
0148	7144000000-E	1705	VEHICLE SIGNAL HEAD (12", 5 SECTION)	4 EA	1,305.00	5,220.00
0149	7229000000-N	SP	APS DETECTOR STATION	16 EA	720.00	11,520.00
0150	7230000000-N	SP	CENTRAL CONTROL UNIT APS DETECTOR STATION	2 EA	3,700.00	7,400.00
0151	7252000000-E	1710	MESSENGER CABLE (1/4")	250 LF	1.20	300.00
0152	7264000000-E	1710	MESSENGER CABLE (3/8")	420 LF	3.00	1,260.00
0153	7300000000-E	1715	UNPAVED TRENCHING (**********) (1, 2")	430 LF	5.25	2,257.50
0154	7300100000-E	1715	UNPAVED TRENCHING FOR TEMP-ORARY LEAD-IN	430 LF	2.90	1,247.00
0155	7324000000-N	1716	JUNCTION BOX (STANDARD SIZE)	8 EA	315.00	2,520.00
0156	7360000000-N	1720	WOOD POLE	4 EA	945.00	3,780.00
0157	7372000000-N	1721	GUY ASSEMBLY	9 EA	235.00	2,115.00
0158	7396000000-E	1722	1/2" RISER WITH WEATHERHEAD	3 EA	160.00	480.00
0159	7408000000-E	1722	1" RISER WITH WEATHERHEAD	1 EA	470.00	470.00
0160	7420000000-E	1722	2" RISER WITH WEATHERHEAD	8 EA	370.00	2,960.00
0161	7432000000-E	1722	2" RISER WITH HEAT SHRINK TUBING	1 EA	390.00	390.00
0162	7444000000-E	1725	INDUCTIVE LOOP SAWCUT	3,870 LF	4.65	17,995.50
0163	7456000000-E	1726	LEAD-IN CABLE (**********) (14-2)	6,260 LF	1.35	8,451.00
0164	7552000000-N	1731	INTERCONNECT CENTER	1 EA	1,715.00	1,715.00
0165	7575180000-N	1735	CABLE TRANSFER	2 EA	105.00	210.00

Contract Item Sheets For C203175

Line #	ItemNumber	Sec #	Description	Quantity Unit	Unit Bid Price	Amount Bid
0166	7636000000-N	1745	SIGN FOR SIGNALS	3 EA	290.00	870.00
0167	7642100000-N	1743	TYPE I POST WITH FOUNDATION	16 EA	1,020.00	16,320.00
0168	7768000000-N	1751	CONTROLLER WITH CABINET (TYPE 2070L, POLE MOUNTED)	1 EA	11,800.00	11,800.00
0169	7780000000-N	1751	DETECTOR CARD (TYPE 2070L)	7 EA	125.00	875.00
			******* BEGIN SCHEDULE AA ******* ******* (2 ALTERNATES) *******			
0170 AA1	0241000000-E	SP	GENERIC GRADING ITEM GEOGRID	6,000 SY		
0171 AA1	0241000000-E	SP	GENERIC GRADING ITEM NONWOVEN SEPARATION GEOTEXTILE	6,000 SY		
			*** OR ***			
0172 AA2	0241000000-E	SP	GENERIC GRADING ITEM HIGH STRENGTH GEOTEXTILE	6,000 SY	3.25	19,500.00
			***** END SCHEDULE AA *****			
			TOTAL AMOUNT OF BID FOR ENTIRE PROJECT			$4,565,146.64

1351/Oct26/Q238872.941/D681785680000/E172

Contract No. C203175

County Orange

Rev. 5-19-11

EXECUTION OF CONTRACT
NON-COLLUSION AFFIDAVIT, DEBARMENT CERTIFICATION AND GIFT BAN CERTIFICATION

CORPORATION

The Contractor being duly sworn, solemnly swears (or affirms) that neither he, nor any official, agent or employee has entered into any agreement, participated in any collusion, or otherwise taken any action which is in restraint of free competitive bidding in connection with this Contract, that the Contractor has not been convicted of violating *N.C.G.S. § 133-24* within the last three years, and that the Contractor intends to do the work with its own bonafide employees or subcontractors and did not bid for the benefit of another contractor.

By submitting this Execution of Contract, Non-Collusion Affidavit and Debarment Certification, the Contractor is certifying his status under penalty of perjury under the laws of the United States in accordance with the Debarment Certification attached, provided that the Debarment Certification also includes any required statements concerning exceptions that are applicable.

N.C.G.S. § 133-32 and Executive Order 24 prohibit the offer to, or acceptance by, any State Employee of any gift from anyone with a contract with the State, or from any person seeking to do business with the State. By execution of any response in this procurement, you attest, for your entire organization and its employees or agents, that you are not aware that any such gift has been offered, accepted, or promised by any employees of your organization.

SIGNATURE OF CONTRACTOR

Triangle Grading and Paving, Inc.

Full name of Corporation

P.O. Drawer 2570, Burlington, NC 27216-2570

Address as Prequalified

Attest _____ By _____

Secretary/~~Assistant Secretary~~ *Select appropriate title*

President/Vice President/~~Assistant Vice President~~ *Select appropriate title*

Jack Bailey

Print or type Signer's name

R.G. Kirkpatrick, Jr.

Print or type Signer's name

CORPORATE SEAL

AFFIDAVIT MUST BE NOTARIZED

Subscribed and sworn to before me this the

1st day of November 2012.

Signature of Notary Public

of Alamance County

State of NC

My Commission Expires: 1/21/14

NOTARY SEAL

Christine V. Isaac
Notary
Public
Alamance County, NC

Contract No. C203175
County Orange

Rev. 5-19-11

DEBARMENT CERTIFICATION

Conditions for certification:

1. The prequalified bidder shall provide immediate written notice to the Department if at any time the bidder learns that his certification was erroneous when he submitted his debarment certification or explanation filed with the Department, or has become erroneous because of changed circumstances.

2. The terms *covered transaction, debarred, suspended, ineligible, lower tier covered transaction, participant, person, primary covered transaction, principal, proposal,* and *voluntarily excluded,* as used in this provision, have the meanings set out in the Definitions and Coverage sections of the rules implementing Executive Order 12549. A copy of the Federal Rules requiring this certification and detailing the definitions and coverages may be obtained from the Contract Officer of the Department.

3. The prequalified bidder agrees by submitting this form, that he will not knowingly enter into any lower tier covered transaction with a person who is debarred, suspended, declared ineligible, or voluntarily excluded from participation in NCDOT contracts, unless authorized by the Department.

4. For Federal Aid projects, the prequalified bidder further agrees that by submitting this form he will include the Federal-Aid Provision titled *Required Contract Provisions Federal-Aid Construction Contract (Form FHWA PR* 1273) provided by the Department, without subsequent modification, in all lower tier covered transactions.

5. The prequalified bidder may rely upon a certification of a participant in a lower tier covered transaction that he is not debarred, suspended, ineligible, or voluntarily excluded from the covered transaction, unless he knows that the certification is erroneous. The bidder may decide the method and frequency by which he will determine the eligibility of his subcontractors.

6. Nothing contained in the foregoing shall be construed to require establishment of a system of records in order to render in good faith the certification required by this provision. The knowledge and information of a participant is not required to exceed that which is normally possessed by a prudent person in the ordinary course of business dealings.

7. Except as authorized in paragraph 6 herein, the Department may terminate any contract if the bidder knowingly enters into a lower tier covered transaction with a person who is suspended, debarred, ineligible, or voluntarily excluded from participation in this transaction, in addition to other remedies available by the Federal Government.

Contract No. C203175

County Orange

Rev. 5-19-11

DEBARMENT CERTIFICATION

The prequalified bidder certifies to the best of his knowledge and belief, that he and his principals:

a. Are not presently debarred, suspended, proposed for debarment, declared ineligible, or voluntarily excluded from covered transactions by any Federal department or agency;

b. Have not within a three-year period preceding this proposal been convicted of or had a civil judgment rendered against them for commission of fraud or a criminal offense in connection with obtaining, attempting to obtain, or performing a public (Federal, State or local) transaction or contract under a public transaction; violation of Federal or State antitrust statutes or commission of embezzlement, theft, forgery, bribery, falsification or destruction of records; making false statements; or receiving stolen property;

c. Are not presently indicted for or otherwise criminally or civilly charged by a governmental entity (Federal, State or local) with commission of any of the offenses enumerated in paragraph b. of this certification; and

d. Have not within a three-year period preceding this proposal had one or more public transactions (Federal, State or local) terminated for cause or default.

e. Will submit a revised Debarment Certification immediately if his status changes and will show in his bid proposal an explanation for the change in status.

If the prequalified bidder cannot certify that he is not debarred, he shall provide an explanation with this submittal. An explanation will not necessarily result in denial of participation in a contract.

Failure to submit a non-collusion affidavit and debarment certification will result in the prequalified bidder's bid being considered non-responsive.

☐ Check here if an explanation is attached to this certification.

Contract No. **C203175**

County (ies): **Orange**

ACCEPTED BY THE
DEPARTMENT OF TRANSPORTATION

Contract Officer

11/8/12
Date

Execution of Contract and Bonds
Approved as to Form:

Attorney General

Bond No. 018028842

Contract No. C203175 Rev 5-17-11
County Orange

CONTRACT PAYMENT BOND

Date of Payment Bond Execution	October 30, 2012
Name of Principal Contractor	Triangle Grading & Paving, Inc.
Name of Surety:	Liberty Mutual Insurance Company
Name of Contracting Body:	**North Carolina Department of Transportation**
	Raleigh, North Carolina
Amount of Bond:	($4,565,146.64) Four Million Five Hundred Sixty Five Thousand One Hundred Forty Six Dollars and 64/100
Contract ID No.:	C203175
County Name:	Orange

KNOW ALL MEN BY THESE PRESENTS, That we, the PRINCIPAL CONTRACTOR (hereafter, PRINCIPAL) and SURETY above named, are held and firmly bound unto the above named Contracting Body, hereinafter called the Contracting Body, in the penal sum of the amount stated above for the payment of which sum well and truly to be made, we bind ourselves, our heirs, executors, administrators, and successors, jointly and severally, firmly by these presents.

THE CONDITION OF THIS OBLIGATION IS SUCH, that whereas the principal entered into a certain contract with the Contracting Body, numbered as shown above and hereto attached:

NOW THEREFORE, if the principal shall promptly make payment to all persons supplying labor and material in the prosecution of the work provided for in said contract, and any and all duly authorized modifications of said contract that may hereafter be made, notice of which modifications to the surety being hereby waived, then this obligation to be void; otherwise to remain in full force and virtue.

IN WITNESS WHEREOF, the above-bound parties have executed this instrument under their several seals on the date indicated above, the name and corporate seal of each corporate party being hereto affixed and these presents duly signed by its undersigned representative, pursuant to authority of its governing body.

Contract No. C203175

County Orange

Rev 5-17-11

CONTRACT PAYMENT BOND

Affix Seal of Surety Company

Liberty Mutual Insurance Company
Print or type Surety Company Name

By Ramona Fewell
Print, stamp or type name of Attorney-in-Fact

LIBERTY MUTUAL INSURANCE COMPANY
INCORPORATED 1912
BOSTON, MASSACHUSETTS

Signature of Attorney-in-Fact

Signature of Witness

Angela Yount
Print or type Signer's name

6230 Fairview Road, Suite 230

Charlotte, NC 28210
Address of Attorney-in-Fact

Contract No. C203175 Rev 5-17-11

County Orange

CONTRACT PAYMENT BOND

CORPORATION

SIGNATURE OF CONTRACTOR (Principal)

Triangle Grading & Paving, Inc.

Full name of Corporation

PO Drawer 2570, Burlington, NC 27216-2570

Address as prequalified

By _____

Signature of ~~President~~, Vice President, ~~Assistant Vice President~~

Select appropriate title

R. G. Kirkpatrick, Jr.

Print or type Signer's name

Affix Corporate Seal

Attest _____

Signature of Secretary, ~~Assistant Secretary~~

Select appropriate title

Jack Bailey

Print or type Signer's name

Bond No. 018028842

Contract No. C203175 Rev 5-17-11

County Orange

CONTRACT PERFORMANCE BOND

Date of Performance Bond Execution: October 30, 2012

Name of Principal Contractor: Triangle Grading & Paving, Inc.

Name of Surety: Liberty Mutual Insurance Company

Name of Contracting Body: **North Carolina Department of Transportation**

Raleigh, North Carolina

Amount of Bond: ($4,565,146.64) Four Million Five Hundred Sixty Five Thousand One Hundred Forty Six Dollars and 64/100

Contract ID No.: C203175

County Name: Orange

KNOW ALL MEN BY THESE PRESENTS, That we, the PRINCIPAL CONTRACTOR (hereafter, PRINCIPAL) and SURETY above named, are held and firmly bound unto the above named Contracting Body, hereinafter called the Contracting Body, in the penal sum of the amount stated above for the payment of which sum well and truly to be made, we bind ourselves, our heirs, executors, administrators, and successors, jointly and severally, firmly by these presents.

THE CONDITION OF THIS OBLIGATION IS SUCH, that whereas the principal entered into a certain contract with the Contracting Body, numbered as shown above and hereto attached:

NOW THEREFORE, if the principal shall well and truly perform and fulfill all the undertakings, covenants, terms, conditions, and agreements of said contract during the original term of said contract and any extensions thereof that may be granted by the Contracting Body, with or without notice to the Surety, and during the life of any guaranty required under the contract, and shall also well and truly perform and fulfill all the undertakings, covenants, terms, conditions, and agreements of any and all duly authorized modifications of said contract that may hereafter be made, notice of which modifications to the surety being hereby waived, then this obligation to be void; otherwise to remain in full force and virtue.

IN WITNESS WHEREOF, the above-bound parties have executed this instrument under their several seals on the date indicated above, the name and corporate seal of each corporate party being hereto affixed and these presents duly signed by its undersigned representative, pursuant to authority of its governing body.

Contract No. C203175
County Orange

Rev 5-17-11

CONTRACT PERFORMANCE BOND

Affix Seal of Surety Company

Liberty Mutual Insurance Company
Print or type Surety Company Name

By Ramona Fewell
Print, stamp or type name of Attorney-in-Fact

LIBERTY MUTUAL INSURANCE COMPANY
INCORPORATED 1912
BOSTON, MASSACHUSETTS

Signature of Attorney-in-Fact

Signature of Witness

Angela Yount
Print or type Signer's name

6230 Fairview Road, Suite 230
Charlotte, NC 28210
Address of Attorney-in-Fact

Contract No. C203175
County Orange

Rev 5-17-11

CONTRACT PERFORMANCE BOND

CORPORATION

SIGNATURE OF CONTRACTOR (Principal)

Triangle Grading & Paving, Inc.
Full name of Corporation

PO Drawer 2570, Burlington, NC 27216-2570
Address as prequalified

By _____
Signature of ~~President~~, Vice President, ~~Assistant Vice President~~
Select appropriate title

R. G. Kirkpatrick, Jr.
Print or type Signer's name

Affix Corporate Seal

Attest _____
Signature of Secretary, Assistant Secretary
Select appropriate title

Jack Bailey
Print or type Signer's name

This Power of Attorney limits the acts of those named herein, and they have no authority to bind the Company except in the manner and to the extent herein stated. Not valid for mortgage, note, loan, letter of credit, bank deposit, currency rate, interest rate or residual value guarantees. To confirm the validity of this Power of Attorney call 610-832-8240 between 9:00 am and 4:30 pm EST on any business day.

American Fire and Casualty Company
The Ohio Casualty Insurance Company
West American Insurance Company

Liberty Mutual Insurance Company
Peerless Insurance Company

POWER OF ATTORNEY

KNOWN ALL PERSONS BY THESE PRESENTS: That American Fire & Casualty Company and The Ohio Casualty Insurance Company are corporations duly organized under the laws of the State of Ohio, that Liberty Mutual Insurance Company is a corporation duly organized under the laws of the State of Massachusetts, that Peerless Insurance Company is a corporation duly organized under the laws of the State of New Hampshire, and West American Insurance Company is a corporation duly organized under the laws of the State of Indiana (herein collectively called the "Companies"), pursuant to and by authority herein set forth, does hereby name, constitute and appoint, Ramona Fewell of the city of Charlotte, state of NC its true and lawful attorney-in-fact, with full power and authority hereby conferred to sign, execute and acknowledge the following surety bond:

Principal Name: Triangle Grading & Paving, Inc.

Obligee Name: NCDOT

Surety Bond Number: 018028842 **Bond Amount:** See Bond Form

IN WITNESS WHEREOF, this Power of Attorney has been subscribed by an authorized officer or official of the Companies and the corporate seals of the Companies have been affixed thereto this 2nd day of May, 2012.

American Fire and Casualty Company
The Ohio Casualty Insurance Company
Liberty Mutual Insurance Company
Peerless Insurance Company
West American Insurance Company

By: _____
Gregory W. Davenport, Assistant Secretary

STATE OF WASHINGTON ss
COUNTY OF KING

On this 2nd day of May, 2012, before me personally appeared Gregory W. Davenport, who acknowledged himself to be the Assistant Secretary of American Fire and Casualty Company, Liberty Mutual Insurance Company, The Ohio Casualty Company, Peerless Insurance Company, and West American Insurance Company, and that he, as such, being authorized so to do, execute the foregoing instrument for the purposes therein contained by signing on behalf of the corporations by himself as a duly authorized officer.

IN WITNESS WHEREOF, I have hereunto subscribed my name and affixed my notarial seal at Seattle, Washington, on the day and year first above written.

By: _____
KD Riley, Notary Public, Notary Public

This Power of Attorney is made and executed pursuant to and by authority of the following By-laws and Authorizations of American Fire and Casualty Company, The Ohio Casualty Insurance Company, Liberty Mutual Insurance Company, Peerless Insurance Company, and West American Insurance Company which resolutions are now in full force and effect reading as follows:

ARTICLE IV – OFFICERS – Section 12. Power of Attorney. Any officer or other official of the Corporation authorized for that purpose in writing by the Chairman or the President, and subject to such limitation as the Chairman or the President may prescribe, shall appoint such attorneys-in-fact, as may be necessary to act in behalf of the Corporation to make, execute, seal, acknowledge and deliver as surety any and all undertakings, bonds, recognizances and other surety obligations. Such attorneys-in-fact, subject to the limitations set forth in their respective powers of attorney, shall have full power to bind the Corporation by their signature and execution of any such instruments and to attach thereto the seal of the Corporation. When so executed, such instruments shall be as binding as if signed by the President and attested to by the Secretary. Any power or authority granted to any representative or attorney-in-fact under the provisions of this article may be revoked at any time by the Board, the Chairman, the President or by the officer or officers granting such power or authority.

ARTICLE XIII – Execution of Contracts – SECTION 5. Surety Bonds and Undertakings. Any officer of the Company authorized for that purpose in writing by the chairman or the president, and subject to such limitations as the chairman or the president may prescribe, shall appoint such attorneys-in-fact, as may be necessary to act in behalf of the Company to make, execute, seal, acknowledge and deliver as surety any and all undertakings, bonds, recognizances and other surety obligations. Such attorneys-in-fact subject to the limitations set forth in their respective powers of attorney, shall have full power to bind the Company by their signature and execution of any such instruments and to attach thereto the seal of the Company. When so executed such instruments shall be as binding as if signed by the president and attested by the secretary.

Certificate of Designation – The President of the Company, acting pursuant to the Bylaws of the Company, authorizes Gregory W. Davenport, Assistant Secretary to appoint such attorneys-in-fact as may be necessary to act on behalf of the Company to make, execute, seal, acknowledge and deliver as surety any and all undertakings, bonds, recognizances and other surety obligations.

Authorization – By unanimous consent of the Company's Board of Directors, the Company consents that facsimile or mechanically reproduced signature of any assistant secretary of the Company, wherever appearing upon a certified copy of any power of attorney issued by the Company in connection with surety bonds, shall be valid and biding upon the Company with the same force and effect as though manually affixed.

I, David M. Carey, the undersigned, Assistant Secretary, of American Fire and Casualty Company, The Ohio Casualty Insurance Company, Liberty Mutual Insurance Company, Peerless Insurance Company, and West American Insurance Company do hereby certify that the original power of attorney of which the foregoing is a full, true and correct copy of the Power of Attorney executed by said Companies, is in full force and effect and has not been revoked.

IN TESTIMONY WHEREOF, I have hereunto set my hand and affixed the seals of said Companies this 30th day of October, 2012.

By: _____
David M. Carey, Assistant Secretary