STATE OF NORTH CAROLINA
DEPARTMENT OF TRANSPORTATION
RALEIGH, N.C.

C203587

CONTRACT AND
CONTRACT BONDS

FOR CONTRACT NO. C203587

WBS 38331.3.FR1 STPNHS-0052(31)

T.I.P NO. B-3159

COUNTY OF DAVIDSON
THIS IS THE ROADWAY & STRUCTURE CONTRACT
ROUTE NUMBER US 52 LENGTH 0.289 MILES
LOCATION BRIDGE #27 OVER US-29/64/70 AND I-85 BUS LOOP ON US-52.

CONTRACTOR J. T. RUSSELL & SONS, INC.
ADDRESS P.O. BOX 670
ALBEMARLE, NC 28002

BIDS OPENED OCTOBER 20, 2015
CONTRACT EXECUTION 11/16/2015

STATE OF NORTH CAROLINA
DEPARTMENT OF TRANSPORTATION
RALEIGH, N.C.

PROPOSAL

DATE AND TIME OF BID OPENING: **OCTOBER 20, 2015 AT 2:00 PM**

CONTRACT ID	C203587
WBS	38331.3.FR1

FEDERAL-AID NO.	STPNHS-0052(31)
COUNTY	DAVIDSON
T.I.P. NO.	B-3159
MILES	0.289
ROUTE NO.	US 52
LOCATION	BRIDGE #27 OVER US-29/64/70 AND I-85 BUS LOOP ON US-52.

TYPE OF WORK GRADING, DRAINAGE, PAVING, SIGNALS, RET WALL, AND STRUCTURE.

NOTICE:

ALL BIDDERS SHALL COMPLY WITH ALL APPLICABLE LAWS REGULATING THE PRACTICE OF GENERAL CONTRACTING AS CONTAINED IN CHAPTER 87 OF THE GENERAL STATUTES OF NORTH CAROLINA WHICH REQUIRES THE BIDDER TO BE LICENSED BY THE N.C. LICENSING BOARD FOR CONTRACTORS WHEN BIDDING ON ANY NON-FEDERAL AID PROJECT WHERE THE BID IS $30,000 OR MORE, EXCEPT FOR CERTAIN SPECIALTY WORK AS DETERMINED BY THE LICENSING BOARD. BIDDERS SHALL ALSO COMPLY WITH ALL OTHER APPLICABLE LAWS REGULATING THE PRACTICES OF ELECTRICAL, PLUMBING, HEATING AND AIR CONDITIONING AND REFRIGERATION CONTRACTING AS CONTAINED IN CHAPTER 87 OF THE GENERAL STATUTES OF NORTH CAROLINA. NOTWITHSTANDING THESE LIMITATIONS ON BIDDING, THE BIDDER WHO IS AWARDED ANY FEDERAL - AID FUNDED PROJECT SHALL COMPLY WITH CHAPTER 87 OF THE GENERAL STATUTES OF NORTH CAROLINA FOR LICENSING REQUIREMENTS WITHIN 60 CALENDAR DAYS OF BID OPENING.

BIDS WILL BE RECEIVED AS SHOWN BELOW:

THIS IS A ROADWAY & STRUCTURE PROPOSAL

5% BID BOND OR BID DEPOSIT REQUIRED

_____

PROPOSAL FOR THE CONSTRUCTION OF

CONTRACT No. C203587 IN DAVIDSON COUNTY, NORTH CAROLINA

Date_____ 20_____

DEPARTMENT OF TRANSPORTATION,

RALEIGH, NORTH CAROLINA

The Bidder has carefully examined the location of the proposed work to be known as Contract No. **C203587**; has carefully examined the plans and specifications, which are acknowledged to be part of the proposal, the special provisions, the proposal, the form of contract, and the forms of contract payment bond and contract performance bond; and thoroughly understands the stipulations, requirements and provisions. The undersigned bidder agrees to be bound upon his execution of the bid and subsequent award to him by the Board of Transportation in accordance with this proposal to provide the necessary contract payment bond and contract performance bond within fourteen days after the written notice of award is received by him. The undersigned Bidder further agrees to provide all necessary machinery, tools, labor, and other means of construction; and to do all the work and to furnish all materials, except as otherwise noted, necessary to perform and complete the said contract in accordance with *the 2012 Standard Specifications for Roads and Structures* by the dates(s) specified in the Project Special Provisions and in accordance with the requirements of the Engineer, and at the unit or lump sum prices, as the case may be, for the various items given on the sheets contained herein.

The Bidder shall provide and furnish all the materials, machinery, implements, appliances and tools, and perform the work and required labor to construct and complete State Highway Contract No. **C203587** in **Davidson County**, for the unit or lump sum prices, as the case may be, bid by the Bidder in his bid and according to the proposal, plans, and specifications prepared by said Department, which proposal, plans, and specifications show the details covering this project, and hereby become a part of this contract.

The published volume entitled *North Carolina Department of Transportation, Raleigh, Standard Specifications for Roads and Structures, January 2012* with all amendments and supplements thereto, is by reference incorporated into and made a part of this contract; that, except as herein modified, all the construction and work included in this contract is to be done in accordance with the specifications contained in said volume, and amendments and supplements thereto, under the direction of the Engineer.

If the proposal is accepted and the award is made, the contract is valid only when signed either by the Contract Officer or such other person as may be designated by the Secretary to sign for the Department of Transportation. The conditions and provisions herein cannot be changed except over the signature of the said Contract Officer.

The quantities shown in the itemized proposal for the project are considered to be approximate only and are given as the basis for comparison of bids. The Department of Transportation may increase or decrease the quantity of any item or portion of the work as may be deemed necessary or expedient.

An increase or decrease in the quantity of an item will not be regarded as sufficient ground for an increase or decrease in the unit prices, nor in the time allowed for the completion of the work, except as provided for the contract.

Accompanying this bid is a bid bond secured by a corporate surety, or certified check payable to the order of the Department of Transportation, for five percent of the total bid price, which deposit is to be forfeited as liquidated damages in case this bid is accepted and the Bidder shall fail to provide the required payment and performance bonds with the Department of Transportation, under the condition of this proposal, within 14 calendar days after the written notice of award is received by him, as provided in the *Standard Specifications*; otherwise said deposit will be returned to the Bidder.

NORTH CAROLINA PROFESSIONAL SEAL 21076 ENGINEER RANDY A. GARRIS

State Contract Officer

DocuSigned by:
Randy A Garris
A7079FC32A09478...

9/16/2015

TABLE OF CONTENTS

COVER SHEET
PROPOSAL SHEET

PROJECT SPECIAL PROVISIONS

CONTRACT TIME AND LIQUIDATED DAMAGES: G-1
INTERMEDIATE CONTRACT TIME NUMBER 1 AND LIQUIDATED DAMAGES: G-1
INTERMEDIATE CONTRACT TIME NUMBER 2 AND LIQUIDATED DAMAGES: G-2
INTERMEDIATE CONTRACT TIME NUMBER 3 AND LIQUIDATED DAMAGES: G-3
INTERMEDIATE CONTRACT TIME NUMBER 4 AND LIQUIDATED DAMAGES: G-4
INTERMEDIATE CONTRACT TIME NUMBER 5 AND LIQUIDATED DAMAGES: G-4
PERMANENT VEGETATION ESTABLISHMENT: G-4
CONSTRUCTION MORATORIUM: G-5
MAJOR CONTRACT ITEMS: G-5
SPECIALTY ITEMS: G-6
FUEL PRICE ADJUSTMENT: G-6
SCHEDULE OF ESTIMATED COMPLETION PROGRESS: G-7
DISADVANTAGED BUSINESS ENTERPRISE: G-7
CERTIFICATION FOR FEDERAL-AID CONTRACTS: G-21
CONTRACTOR'S LICENSE REQUIREMENTS: G-21
U.S. DEPARTMENT OF TRANSPORTATION HOTLINE: G-21
SUBSURFACE INFORMATION: G-22
LOCATING EXISTING UNDERGROUND UTILITIES: G-22
VALUE ENGINEERING PROPOSAL: G-22
RESOURCE CONSERVATION AND ENV. SUSTAINABLE PRACTICES: G-23
DOMESTIC STEEL: G-24
PORTABLE CONCRETE BARRIER - (Partial Payments for Materials): G-24
REMOVABLE PAVEMENT MARKINGS - (Partial Payments for Materials): G-25
MAINTENANCE OF THE PROJECT: G-25
TWELVE MONTH GUARANTEE: G-26
GIFTS FROM VENDORS AND CONTRACTORS: G-26
LIABILITY INSURANCE: G-27
EROSION AND SEDIMENT CONTROL/STORMWATER CERTIFICATION: G-27
PROCEDURE FOR MONITORING BORROW PIT DISCHARGE: G-32
EMPLOYMENT: G-34
STATE HIGHWAY ADMINISTRATOR TITLE CHANGE: G-34
SUBLETTING OF CONTRACT: G-35
MOBILIZATION: G-35

ROADWAY R-1

STANDARD SPECIAL PROVISIONS

AVAILABILITY FUNDS – TERMINATION OF CONTRACTS SSP-1
NCDOT GENERAL SEED SPECIFICATION FOR SEED QUALITY SSP-2
ERRATA.....SSP-5
PLANT AND PEST QUARANTINES SSP-7
AWARD OF CONTRACT.....SSP-8
MINORITY AND FEMALE EMPLOYMENT REQUIREMENTS SSP-9
REQUIRED CONTRACT PROVISIONS FEDERAL-AID CONST. CONTRACTS.....SSP-12
ON-THE-JOB TRAINING.....SSP-21
MINIMUM WAGES SSP-24

UNIT PROJECT SPECIAL PROVISIONS

GEOTECHNICAL.....GT-0.1
GEOENVIRONMENTAL..... GV-1
TRAFFIC CONTROL TC-1
LIGHTING LT-1
UTILITY CONSTRUCTION.....UC-1
UTILITY BY OTHERS.....UBO-1
EROSION CONTROL EC-1
TRAFFIC SIGNALS TS-1
ELECTRICAL CONDUIT SYSTEM ECS-1
STRUCTURE / CULVERTS ST-1

PERMITS P-1

PROPOSAL ITEM SHEET

ITEM SHEET(S) (TAN SHEETS)

PROJECT SPECIAL PROVISIONS

GENERAL

CONTRACT TIME AND LIQUIDATED DAMAGES:

(8-15-00) (Rev. 12-18-07) 108 SP1 G07 A

The date of availability for this contract is **April 1, 2016**, except that work in jurisdictional waters and wetlands shall not begin until a meeting between the DOT, Regulatory Agencies, and the Contractor is held as stipulated in the permits contained elsewhere in this proposal. This delay in availability has been considered in determining the contract time for this project.

The completion date for this contract is **October 28, 2019**.

Except where otherwise provided by the contract, observation periods required by the contract will not be a part of the work to be completed by the completion date and/or intermediate contract times stated in the contract. The acceptable completion of the observation periods that extend beyond the final completion date shall be a part of the work covered by the performance and payment bonds.

The liquidated damages for this contract are **Two Hundred Dollars ($ 200.00)** per calendar day. These liquidated damages will not be cumulative with any liquidated damages which may become chargeable under Intermediate Contract Time Number 1.

INTERMEDIATE CONTRACT TIME NUMBER 1 AND LIQUIDATED DAMAGES:

(7-1-95) (Rev. 2-21-12) 108 SP1 G13 A

Except for that work required under the Project Special Provisions entitled *Planting, Reforestation* and/or *Permanent Vegetation Establishment*, included elsewhere in this proposal, the Contractor will be required to complete all work included in this contract and shall place and maintain traffic on same.

The date of availability for this intermediate contract time is **April 1, 2016**.

The completion date for this intermediate contract time is **May 1, 2019**.

The liquidated damages for this intermediate contract time are **Two Thousand Dollars ($ 2,000.00)** per calendar day.

Upon apparent completion of all the work required to be completed by this intermediate date, a final inspection will be held in accordance with Article 105-17 and upon acceptance, the Department will assume responsibility for the maintenance of all work except *Planting, Reforestation* and/or *Permanent Vegetation Establishment*. The Contractor will be responsible for and shall make corrections of all damages to the completed roadway caused by his planting operations, whether occurring prior to or after placing traffic through the project.

INTERMEDIATE CONTRACT TIME NUMBER 2 AND LIQUIDATED DAMAGES:
(2-20-07) 108 SP1 G14 A

The Contractor shall complete the required work of installing, maintaining, and removing the traffic control devices for lane closures and restoring traffic to the existing traffic pattern. The Contractor shall not close or narrow a lane of traffic on **–L– / –Y2– (NC 8)** during the following time restrictions:

DAY AND TIME RESTRICTIONS

Monday thru Friday
From 7:00 AM to 9:00 AM
and
From 4:00 PM to 6:00 PM

In addition, the Contractor shall not close or narrow a lane of traffic on **–L– / –Y2– (NC 8)**, detain and/or alter the traffic flow on or during holidays, holiday weekends, special events, or any other time when traffic is unusually heavy, including the following schedules:

HOLIDAY AND HOLIDAY WEEKEND LANE CLOSURE RESTRICTIONS

1. For **unexpected occurrence** that creates unusually high traffic volumes, as directed by the Engineer.

2. For **New Year's Day**, between the hours of **7:00 AM** December 31st and **6:00 PM** January 2nd. If New Year's Day is on a Friday, Saturday, Sunday or Monday, then until **6:00 PM** the following Tuesday.

3. For **Easter**, between the hours of **7:00 AM** Thursday and **6:00 PM** Monday.

4. For **Memorial Day**, between the hours of **7:00 AM** Friday and **6:00 PM** Tuesday.

5. For **Independence Day**, between the hours of **7:00 AM** the day before Independence Day and **6:00 PM** the day after Independence Day.

   If **Independence Day** is on a Friday, Saturday, Sunday or Monday, then between the hours of **7:00 AM** the Thursday before Independence Day and **6:00 PM** the Tuesday after Independence Day.

6. For **Labor Day**, between the hours of **7:00 AM** Friday and **6:00 PM** Tuesday.

7. For **Thanksgiving Day**, between the hours of **7:00 AM** Tuesday and **6:00 PM** Monday.

8. For **Christmas**, between the hours of **7:00 AM** the Friday before the week of Christmas Day and **6:00 PM** the following Tuesday after the week of Christmas Day.

9. For **Lexington BBQ Festival**, as directed by the engineer, between the hours of **7:00 AM** the **Friday** before the **festival** and **6:00 PM** the **Sunday** following the **festival**.

Holidays and holiday weekends shall include New Year's, Easter, Memorial Day, Independence Day, Labor Day, Thanksgiving, and Christmas. The Contractor shall schedule his work so that lane closures will not be required during these periods, unless otherwise directed by the Engineer.

The time of availability for this intermediate contract work shall be the time the Contractor begins to install all traffic control devices for lane closures according to the time restrictions listed herein.

The completion time for this intermediate contract work shall be the time the Contractor is required to complete the removal of all traffic control devices for lane closures according to the time restrictions stated above and place traffic in the existing traffic pattern.

The liquidated damages are **Five Hundred Dollars ($500.00)** per **15** minute time period.

INTERMEDIATE CONTRACT TIME NUMBER 3 AND LIQUIDATED DAMAGES:
(2-20-07) 108 SP1 G14 D

The Contractor shall complete the required work of installing, maintaining and removing the traffic control devices for road closures and restoring traffic to the existing traffic pattern. The Contractor shall not close **–Y– (I-85 Business)** during the following time restrictions:

DAY AND TIME RESTRICTIONS

From Monday at 5:00 AM to Friday at 10:00 PM
From Saturday at 5:00 AM to Saturday at 10:00 PM
From Sunday at 5:00 AM to Sunday at 10:00 PM

The contractor shall close I-85 Business and detour traffic up and down the ramps at the NC 8 interchange to perform NC 8 overhead work.

The time of availability for this intermediate contract time will be the time the Contractor begins to install traffic control devices required for road closures according to the time restrictions stated herein.

The completion time for this intermediate contract time will be the time the Contractor is required to complete the removal of traffic control devices required for the road closures according to the time restrictions stated herein and restore traffic to the existing traffic pattern

The liquidated damages are **Five Hundred Dollars ($500.00)** per **15** minute time period.

INTERMEDIATE CONTRACT TIME NUMBER 4 AND LIQUIDATED DAMAGES:
(2-20-07) (Rev. 10-15-13) 108 SP1 G14 E

The Contractor shall complete the required work of installing, maintaining and removing the traffic control devices for road closures and restoring traffic to the existing traffic pattern. The Contractor shall not close **–Y– (I-85 Business)** during the following time restrictions:

DAY AND TIME RESTRICTIONS

From Monday at 5:00 AM to Friday at 10:00 PM
From Saturday at 5:00 AM to Saturday at 10:00 PM
From Sunday at 5:00 AM to Sunday at 10:00 PM

The maximum allowable time for **pedestrian bridge overhead demolition** is **thirty (30)** minutes for **–Y– (I-85 Business)**. The Contractor shall reopen the travel lanes to traffic until any resulting traffic queue is depleted. **The pedestrian bridge overhead demolition shall be completed in one (1) weekend**.

The time of availability for this intermediate contract time will be the time the Contractor begins to install traffic control devices required for the road closures according to the time restrictions stated herein.

The completion time for this intermediate contract time will be the time the Contractor is required to complete the removal of traffic control devices required for the road closures according to the time restrictions stated herein and restore traffic to the existing traffic pattern.

The liquidated damages are **Five Hundred Dollars ($500.00)** per **15** minute time period.

INTERMEDIATE CONTRACT TIME NUMBER 5 AND LIQUIDATED DAMAGES:
(2-20-07) (Rev. 6-18-13) 108 SP1 G14 H

The Contractor shall complete the work required of **Phase I, Step #6** as shown on Sheet **TMP- 3** and shall place and maintain traffic on same.

The date of availability for this intermediate contract time is the date the Contractor elects to begin the work.

The completion date for this intermediate contract time is the date which is **ninety (90)** consecutive calendar days after and including the date the Contractor begins this work.

The liquidated damages are **Five Hundred Dollars ($500.00)** per calendar day.

PERMANENT VEGETATION ESTABLISHMENT:
(2-16-12) (Rev. 10-15-13) 104 SP1 G16

Establish a permanent stand of the vegetation mixture shown in the contract. During the period between initial vegetation planting and final project acceptance, perform all work necessary to establish permanent vegetation on all erodible areas within the project limits, as well as,

in borrow and waste pits. This work shall include erosion control device maintenance and installation, repair seeding and mulching, supplemental seeding and mulching, mowing, and fertilizer topdressing, as directed. All work shall be performed in accordance with the applicable section of the *2012 Standard Specifications*. All work required for initial vegetation planting shall be performed as a part of the work necessary for the completion and acceptance of the Intermediate Contract Time (ICT). Between the time of ICT and Final Project acceptance, or otherwise referred to as the vegetation establishment period, the Department will be responsible for preparing the required National Pollutant Discharge Elimination System (NPDES) inspection records.

Once the Engineer has determined that the permanent vegetation establishment requirement has been achieved at an 80% vegetation density (the amount of established vegetation per given area to stabilize the soil) and no erodible areas exist within the project limits, the Contractor will be notified to remove the remaining erosion control devices that are no longer needed. The Contractor will be responsible for, and shall correct any areas disturbed by operations performed in permanent vegetation establishment and the removal of temporary erosion control measures, whether occurring prior to or after placing traffic on the project.

Payment for *Response for Erosion Control*, *Seeding and Mulching*, *Repair Seeding*, *Supplemental Seeding*, *Mowing*, *Fertilizer Topdressing*, *Silt Excavation*, and *Stone for Erosion Control* will be made at contract unit prices for the affected items. Work required that is not represented by contract line items will be paid in accordance with Articles 104-7 or 104-3 of the *2012 Standard Specifications*. No additional compensation will be made for maintenance and removal of temporary erosion control items.

CONSTRUCTION MORATORIUM:

(4-27-15)

All tree cutting activities associated with this project shall occur between August 15th and May 15th, of any year, so that bat habitats are not disturbed during roosting season.

MAJOR CONTRACT ITEMS:

(2-19-02) 104 SP1 G28

The following listed items are the major contract items for this contract (see Article 104-5 of the *2012 Standard Specifications*):

Line #		Description
232	—	Reinforced Concrete Deck Slab
238	—	45” Prestressed Concrete Girders

SPECIALTY ITEMS:

(7-1-95)(Rev. 1-17-12) 108-6 SP1 G37

Items listed below will be the specialty items for this contract (see Article 108-6 of the *2012 Standard Specifications*).

Line #	**Description**
81 - 90	Guardrail
91 - 93	Fencing
97 - 107	Signing
124 - 130 & 132 - 133	Long-Life Pavement Markings
131	Removable Tape
140 - 141	Permanent Pavement Markers
142 - 144	Lighting
145 - 162	Utility Construction
163 - 189	Erosion Control
190 - 225	Signals/ITS System

FUEL PRICE ADJUSTMENT:

(11-15-05) (Rev. 2-18-14) 109-8 SP1 G43

Revise the *2012 Standard Specifications* as follows:

Page 1-83, Article 109-8, Fuel Price Adjustments, add the following:

The base index price for DIESEL #2 FUEL is **$ 1.4789** per gallon. Where any of the following are included as pay items in the contract, they will be eligible for fuel price adjustment.

The pay items and the fuel factor used in calculating adjustments to be made will be as follows:

Description	**Units**	**Fuel Usage Factor Diesel**
Unclassified Excavation	Gal/CY	0.29
Borrow Excavation	Gal/CY	0.29
Class IV Subgrade Stabilization	Gal/Ton	0.55
Aggregate Base Course	Gal/Ton	0.55
Sub-Ballast	Gal/Ton	0.55
Asphalt Concrete Base Course, Type ____	Gal/Ton	2.90
Asphalt Concrete Intermediate Course, Type ____	Gal/Ton	2.90
Asphalt Concrete Surface Course, Type ____	Gal/Ton	2.90
Open-Graded Asphalt Friction Course	Gal/Ton	2.90
Permeable Asphalt Drainage Course, Type ____	Gal/Ton	2.90
Sand Asphalt Surface Course, Type ____	Gal/Ton	2.90
Aggregate for Cement Treated Base Course	Gal/Ton	0.55
Portland Cement for Cement Treated Base Course	Gal/Ton	0.55
__" Portland Cement Concrete Pavement	Gal/SY	0.245
Concrete Shoulders Adjacent to __" Pavement	Gal/SY	0.245

SCHEDULE OF ESTIMATED COMPLETION PROGRESS:

(7-15-08) (Rev. 5-19-15) 108-2 SP1 G58

The Contractor's attention is directed to the Standard Special Provision entitled *Availability of Funds Termination of Contracts* included elsewhere in this proposal. The Department of Transportation's schedule of estimated completion progress for this project as required by that Standard Special Provision is as follows:

2016	(7/01/15 - 6/30/16)	**12** % of Total Amount Bid
2017	(7/01/16 - 6/30/17)	**43** % of Total Amount Bid
2018	(7/01/17 - 6/30/18)	**29** % of Total Amount Bid
2019	(7/01/18 - 6/30/19)	**16** % of Total Amount Bid

The Contractor shall also furnish his own progress schedule in accordance with Article 108-2 of the *2012 Standard Specifications*. Any acceleration of the progress as shown by the Contractor's progress schedule over the progress as shown above shall be subject to the approval of the Engineer.

DISADVANTAGED BUSINESS ENTERPRISE:

(10-16-07)(Rev. 12-17-13) 102-15(J) SP1 G61

Description

The purpose of this Special Provision is to carry out the U.S. Department of Transportation's policy of ensuring nondiscrimination in the award and administration of contracts financed in whole or in part with Federal funds. This provision is guided by 49 CFR Part 26.

Definitions

Additional DBE Subcontractors - Any DBE submitted at the time of bid that will not be used to meet the DBE goal. No submittal of a Letter of Intent is required.

Committed DBE Subcontractor - Any DBE submitted at the time of bid that is being used to meet the DBE goal by submission of a Letter of Intent. Or any DBE used as a replacement for a previously committed DBE firm.

Contract Goal Requirement - The approved DBE participation at time of award, but not greater than the advertised contract goal.

DBE Goal - A portion of the total contract, expressed as a percentage, that is to be performed by committed DBE subcontractor(s).

Disadvantaged Business Enterprise (DBE) - A firm certified as a Disadvantaged Business Enterprise through the North Carolina Unified Certification Program.

Goal Confirmation Letter - Written documentation from the Department to the bidder confirming the Contractor's approved, committed DBE participation along with a listing of the committed DBE firms.

Manufacturer - A firm that operates or maintains a factory or establishment that produces on the premises, the materials or supplies obtained by the Contractor.

Regular Dealer - A firm that owns, operates, or maintains a store, warehouse, or other establishment in which the materials or supplies required for the performance of the contract are bought, kept in stock, and regularly sold to the public in the usual course of business. A regular dealer engages in, as its principal business and in its own name, the purchase and sale or lease of the products in question. A regular dealer in such bulk items as steel, cement, gravel, stone, and petroleum products need not keep such products in stock, if it owns and operates distribution equipment for the products. Brokers and packagers are not regarded as manufacturers or regular dealers within the meaning of this section.

North Carolina Unified Certification Program (NCUCP) - A program that provides comprehensive services and information to applicants for DBE certification, such that an applicant is required to apply only once for a DBE certification that will be honored by all recipients of USDOT funds in the state and not limited to the Department of Transportation only. The Certification Program is in accordance with 49 CFR Part 26.

United States Department of Transportation (USDOT) - Federal agency responsible for issuing regulations (49 CFR Part 26) and official guidance for the DBE program.

Forms and Websites Referenced in this Provision

DBE Payment Tracking System - On-line system in which the Contractor enters the payments made to DBE subcontractors who have performed work on the project. https://apps.dot.state.nc.us/Vendor/PaymentTracking/

DBE-IS *Subcontractor Payment Information* - Form for reporting the payments made to all DBE firms working on the project. This form is for paper bid projects only. http://www.ncdot.org/doh/forms/files/DBE-IS.xls

RF-1 *DBE Replacement Request Form* - Form for replacing a committed DBE. http://connect.ncdot.gov/projects/construction/Construction%20Forms/DBE%20MBE%20WBE%20Replacement%20Request%20Form.pdf

SAF *Subcontract Approval Form* - Form required for approval to sublet the contract. http://connect.ncdot.gov/projects/construction/Construction%20Forms/Subcontract%20Approval%20Form%20Rev.%202012.zip

JC-1 *Joint Check Notification Form* - Form and procedures for joint check notification. The form acts as a written joint check agreement among the parties providing full and prompt disclosure of the expected use of joint checks. http://connect.ncdot.gov/projects/construction/Construction%20Forms/Joint%20Check%20Notification%20Form.pdf

Letter of Intent - Form signed by the Contractor and the DBE subcontractor, manufacturer or regular dealer that affirms that a portion of said contract is going to be performed by the signed DBE for the amount listed at the time of bid.
http://connect.ncdot.gov/letting/LetCentral/Letter%20of%20Intent%20to%20Perform%20as%20a%20Subcontractor.pdf

Listing of DBE Subcontractors Form - Form for entering DBE subcontractors on a project that will meet this DBE goal. This form is for paper bids only.
http://connect.ncdot.gov/municipalities/Bid%20Proposals%20for%20LGA%20Content/08%20DBE%20Subcontractors%20(Federal).docx

Subcontractor Quote Comparison Sheet - Spreadsheet for showing all subcontractor quotes in the work areas where DBEs quoted on the project. This sheet is submitted with good faith effort packages.
http://connect.ncdot.gov/business/SmallBusiness/Documents/DBE%20Subcontractor%20Quote%20Comparison%20Example.xls

DBE Goal

The following DBE goal for participation by Disadvantaged Business Enterprises is established for this contract:

Disadvantaged Business Enterprises **13.0 %**

(A) *If the DBE goal is more than zero*, the Contractor shall exercise all necessary and reasonable steps to ensure that DBEs participate in at least the percent of the contract as set forth above as the DBE goal.

(B) *If the DBE goal is zero*, the Contractor shall make an effort to recruit and use DBEs during the performance of the contract. Any DBE participation obtained shall be reported to the Department.

Directory of Transportation Firms (Directory)

Real-time information is available about firms doing business with the Department and firms that are certified through NCUCP in the Directory of Transportation Firms. Only firms identified in the Directory as DBE certified shall be used to meet the DBE goal. The Directory can be found at the following link. https://partner.ncdot.gov/VendorDirectory/default.html

The listing of an individual firm in the directory shall not be construed as an endorsement of the firm's capability to perform certain work.

Listing of DBE Subcontractors

At the time of bid, bidders shall submit <u>all</u> DBE participation that they anticipate to use during the life of the contract. Only those identified to meet the DBE goal will be considered

committed, even though the listing shall include both committed DBE subcontractors and additional DBE subcontractors. Additional DBE subcontractor participation submitted at the time of bid will be used toward the Department's overall race-neutral goal. Only those firms with current DBE certification at the time of bid opening will be acceptable for listing in the bidder's submittal of DBE participation. The Contractor shall indicate the following required information:

(A) Electronic Bids

Bidders shall submit a listing of DBE participation in the appropriate section of Expedite, the bidding software of Bid Express®.

(1) Submit the names and addresses of DBE firms identified to participate in the contract. If the bidder uses the updated listing of DBE firms shown in Expedite, the bidder may use the dropdown menu to access the name and address of the DBE firm.

(2) Submit the contract line numbers of work to be performed by each DBE firm. When no figures or firms are entered, the bidder will be considered to have no DBE participation.

(3) The bidder shall be responsible for ensuring that the DBE is certified at the time of bid by checking the Directory of Transportation Firms. If the firm is not certified at the time of the bid-letting, that DBE's participation will not count towards achieving the DBE goal.

(B) Paper Bids

(1) *If the DBE goal is more than zero,*

(a) Bidders, at the time the bid proposal is submitted, shall submit a listing of *DBE* participation, including the names and addresses on *Listing of DBE Subcontractors* contained elsewhere in the contract documents in order for the bid to be considered responsive. Bidders shall indicate the total dollar value of the DBE participation for the contract.

(b) If bidders have no DBE participation, they shall indicate this on the *Listing of DBE Subcontractors* by entering the word "None" or the number "0." This form shall be completed in its entirety. **Blank forms will not be deemed to represent zero participation**. Bids submitted that do not have DBE participation indicated on the appropriate form will not be read publicly during the opening of bids. The Department will not consider these bids for award and the proposal will be rejected.

(c) The bidder shall be responsible for ensuring that the DBE is certified at the time of bid by checking the Directory of Transportation Firms. If the

firm is not certified at the time of the bid-letting, that DBE's participation will not count towards achieving the corresponding goal.

(2) *If the DBE goal is zero,* entries on the *Listing of DBE Subcontractors* are not required for the zero goal, however any DBE participation that is achieved during the project shall be reported in accordance with requirements contained elsewhere in the special provision.

DBE Prime Contractor

When a certified DBE firm bids on a contract that contains a DBE goal, the DBE firm is responsible for meeting the goal or making good faith efforts to meet the goal, just like any other bidder. In most cases, a DBE bidder on a contract will meet the DBE goal by virtue of the work it performs on the contract with its own forces. However, all the work that is performed by the DBE bidder and any other DBE subcontractors will count toward the DBE goal. The DBE bidder shall list itself along with any DBE subcontractors, if any, in order to receive credit toward the DBE goal.

For example, if the DBE goal is 45% and the DBE bidder will only perform 40% of the contract work, the prime will list itself at 40%, and the additional 5% shall be obtained through additional DBE participation with DBE subcontractors or documented through a good faith effort.

DBE prime contractors shall also follow Sections A and B listed under *Listing of DBE Subcontractor* just as a non-DBE bidder would.

Written Documentation – Letter of Intent

The bidder shall submit written documentation for each DBE that will be used to meet the DBE goal of the contract, indicating the bidder's commitment to use the DBE in the contract. This documentation shall be submitted on the Department's form titled *Letter of Intent*.

The documentation shall be received in the office of the State Contractor Utilization Engineer or at DBE@ncdot.gov no later than 12:00 noon of the sixth calendar day following opening of bids, unless the sixth day falls on an official state holiday. In that situation, it is due in the office of the State Contractor Utilization Engineer no later than 12:00 noon on the next official state business day.

If the bidder fails to submit the Letter of Intent from each committed DBE to be used toward the DBE goal, or if the form is incomplete (i.e. both signatures are not present), the DBE participation will not count toward meeting the DBE goal. If the lack of this participation drops the commitment below the DBE goal, the Contractor shall submit evidence of good faith efforts, completed in its entirety, to the State Contractor Utilization Engineer or DBE@ncdot.gov no later than 12:00 noon on the eighth calendar day following opening of bids, unless the eighth day falls on an official state holiday. In that situation, it is due in the office of the State Contractor Utilization Engineer no later than 12:00 noon on the next official state business day.

Submission of Good Faith Effort

If the bidder fails to meet or exceed the DBE goal, the apparent lowest responsive bidder shall submit to the Department documentation of adequate good faith efforts made to reach the DBE goal.

A hard copy and an electronic copy of this information shall be received in the office of the State Contractor Utilization Engineer or at DBE@ncdot.gov no later than 12:00 noon of the sixth calendar day following opening of bids unless the sixth day falls on an official state holiday. In that situation, it is due in the office of the State Contractor Utilization Engineer the next official state business day. If the contractor cannot send the information electronically, then one complete set and 9 copies of this information shall be received under the same time constraints above.

Note: Where the information submitted includes repetitious solicitation letters, it will be acceptable to submit a representative letter along with a distribution list of the firms that were solicited. Documentation of DBE quotations shall be a part of the good faith effort submittal. This documentation may include written subcontractor quotations, telephone log notations of verbal quotations, or other types of quotation documentation.

Consideration of Good Faith Effort for Projects with DBE Goals More Than Zero

Adequate good faith efforts mean that the bidder took all necessary and reasonable steps to achieve the goal which, by their scope, intensity, and appropriateness, could reasonably be expected to obtain sufficient DBE participation. Adequate good faith efforts also mean that the bidder actively and aggressively sought DBE participation. Mere *pro forma* efforts are not considered good faith efforts.

The Department will consider the quality, quantity, and intensity of the different kinds of efforts a bidder has made. Listed below are examples of the types of actions a bidder will take in making a good faith effort to meet the goal and are not intended to be exclusive or exhaustive, nor is it intended to be a mandatory checklist.

(A) Soliciting through all reasonable and available means (e.g. attendance at pre-bid meetings, advertising, written notices, use of verifiable electronic means through the use of the NCDOT Directory of Transportation Firms) the interest of all certified DBEs who have the capability to perform the work of the contract. The bidder must solicit this interest within at least 10 days prior to bid opening to allow the DBEs to respond to the solicitation. Solicitation shall provide the opportunity to DBEs within the Division and surrounding Divisions where the project is located. The bidder must determine with certainty if the DBEs are interested by taking appropriate steps to follow up initial solicitations.

(B) Selecting portions of the work to be performed by DBEs in order to increase the likelihood that the DBE goals will be achieved.

(1) Where appropriate, break out contract work items into economically feasible units to facilitate DBE participation, even when the prime contractor might otherwise prefer to perform these work items with its own forces.

(2) Negotiate with subcontractors to assume part of the responsibility to meet the contract DBE goal when the work to be sublet includes potential for DBE participation (2nd and 3rd tier subcontractors).

(C) Providing interested DBEs with adequate information about the plans, specifications, and requirements of the contract in a timely manner to assist them in responding to a solicitation.

(D) (1) Negotiating in good faith with interested DBEs. It is the bidder's responsibility to make a portion of the work available to DBE subcontractors and suppliers and to select those portions of the work or material needs consistent with the available DBE subcontractors and suppliers, so as to facilitate DBE participation. Evidence of such negotiation includes the names, addresses, and telephone numbers of DBEs that were considered; a description of the information provided regarding the plans and specifications for the work selected for subcontracting; and evidence as to why additional agreements could not be reached for DBEs to perform the work.

(2) A bidder using good business judgment would consider a number of factors in negotiating with subcontractors, including DBE subcontractors, and would take a firm's price and capabilities as well as contract goals into consideration. However, the fact that there may be some additional costs involved in finding and using DBEs is not in itself sufficient reason for a bidder's failure to meet the contract DBE goal, as long as such costs are reasonable. Also, the ability or desire of a prime contractor to perform the work of a contract with its own organization does not relieve the bidder of the responsibility to make good faith efforts. Bidding contractors are not, however, required to accept higher quotes from DBEs if the price difference is excessive or unreasonable.

(E) Not rejecting DBEs as being unqualified without sound reasons based on a thorough investigation of their capabilities. The bidder's standing within its industry, membership in specific groups, organizations, or associates and political or social affiliations (for example, union vs. non-union employee status) are not legitimate causes for the rejection or non-solicitation of bids in the bidder's efforts to meet the project goal.

(F) Making efforts to assist interested DBEs in obtaining bonding, lines of credit, or insurance as required by the recipient or bidder.

(G) Making efforts to assist interested DBEs in obtaining necessary equipment, supplies, materials, or related assistance or services.

(H) Effectively using the services of available minority/women community organizations; minority/women contractors' groups; Federal, State, and local minority/women business assistance offices; and other organizations as allowed on a case-by-case basis to provide assistance in the recruitment and placement of DBEs. Contact within 7 days from the bid opening the Business Development Manager in the Business Opportunity and Work Force Development Unit to give notification of the bidder's inability to get DBE quotes.

(I) Any other evidence that the bidder submits which shows that the bidder has made reasonable good faith efforts to meet the DBE goal.

In addition, the Department may take into account the following:

(1) Whether the bidder's documentation reflects a clear and realistic plan for achieving the DBE goal.

(2) The bidders' past performance in meeting the DBE goals.

(3) The performance of other bidders in meeting the DBE goal. For example, when the apparent successful bidder fails to meet the DBE goal, but others meet it, you may reasonably raise the question of whether, with additional reasonable efforts the apparent successful bidder could have met the goal. If the apparent successful bidder fails to meet the DBE goal, but meets or exceeds the average DBE participation obtained by other bidders, the Department may view this, in conjunction with other factors, as evidence of the apparent successful bidder having made a good faith effort.

If the Department does not award the contract to the apparent lowest responsive bidder, the Department reserves the right to award the contract to the next lowest responsive bidder that can satisfy to the Department that the DBE goal can be met or that an adequate good faith effort has been made to meet the DBE goal.

Non-Good Faith Appeal

The State Contractor Utilization Engineer will notify the contractor verbally and in writing of non-good faith. A contractor may appeal a determination of non-good faith made by the Goal Compliance Committee. If a contractor wishes to appeal the determination made by the Committee, they shall provide written notification to the State Contractual Services Engineer or at DBE@ncdot.gov. The appeal shall be made within 2 business days of notification of the determination of non-good faith.

Counting DBE Participation Toward Meeting DBE Goal

(A) Participation

The total dollar value of the participation by a committed DBE will be counted toward the contract goal requirement. The total dollar value of participation by a committed DBE will be based upon the value of work actually performed by the DBE and the actual payments to DBE firms by the Contractor.

(B) Joint Checks

Prior notification of joint check use shall be required when counting DBE participation for services or purchases that involves the use of a joint check. Notification shall be through submission of Form JC-1 *(Joint Check Notification Form)* and the use of joint checks shall be in accordance with the Department's Joint Check Procedures.

(C) Subcontracts (Non-Trucking)

A DBE may enter into subcontracts. Work that a DBE subcontracts to another DBE firm may be counted toward the contract goal requirement. Work that a DBE subcontracts to a non-DBE firm does <u>not</u> count toward the contract goal requirement. If a DBE contractor or subcontractor subcontracts a significantly greater portion of the work of the contract than would be expected on the basis of standard industry practices, it shall be presumed that the DBE is not performing a commercially useful function. The DBE may present evidence to rebut this presumption to the Department. The Department's decision on the rebuttal of this presumption is subject to review by the Federal Highway Administration but is not administratively appealable to USDOT.

(D) Joint Venture

When a DBE performs as a participant in a joint venture, the Contractor may count toward its contract goal requirement a portion of the total value of participation with the DBE in the joint venture, that portion of the total dollar value being a distinct clearly defined portion of work that the DBE performs with its forces.

(E) Suppliers

A contractor may count toward its DBE requirement 60 percent of its expenditures for materials and supplies required to complete the contract and obtained from a DBE regular dealer and 100 percent of such expenditures from a DBE manufacturer.

(F) Manufacturers and Regular Dealers

A contractor may count toward its DBE requirement the following expenditures to DBE firms that are not manufacturers or regular dealers:

(1) The fees or commissions charged by a DBE firm for providing a *bona fide* service, such as professional, technical, consultant, or managerial services, or for providing bonds or insurance specifically required for the performance of a DOT-assisted contract, provided the fees or commissions are determined to be reasonable and not excessive as compared with fees and commissions customarily allowed for similar services.

(2) With respect to materials or supplies purchased from a DBE, which is neither a manufacturer nor a regular dealer, count the entire amount of fees or commissions charged for assistance in the procurement of the materials and supplies, or fees or transportation charges for the delivery of materials or supplies required on a job site (but not the cost of the materials and supplies themselves), provided the fees are determined to be reasonable and not excessive as compared with fees customarily allowed for similar services.

Commercially Useful Function

(A) DBE Utilization

The Contractor may count toward its contract goal requirement only expenditures to DBEs that perform a commercially useful function in the work of a contract. A DBE performs a commercially useful function when it is responsible for execution of the work of the contract and is carrying out its responsibilities by actually performing, managing, and supervising the work involved. To perform a commercially useful function, the DBE shall also be responsible with respect to materials and supplies used on the contract, for negotiating price, determining quality and quantity, ordering the material and installing (where applicable) and paying for the material itself. To determine whether a DBE is performing a commercially useful function, the Department will evaluate the amount of work subcontracted, industry practices, whether the amount the firm is to be paid under the contract is commensurate with the work it is actually performing and the DBE credit claimed for its performance of the work, and any other relevant factors.

(B) DBE Utilization in Trucking

The following factors will be used to determine if a DBE trucking firm is performing a commercially useful function:

(1) The DBE shall be responsible for the management and supervision of the entire trucking operation for which it is responsible on a particular contract, and there shall not be a contrived arrangement for the purpose of meeting DBE goals.

(2) The DBE shall itself own and operate at least one fully licensed, insured, and operational truck used on the contract.

(3) The DBE receives credit for the total value of the transportation services it provides on the contract using trucks it owns, insures, and operates using drivers it employs.

(4) The DBE may subcontract the work to another DBE firm, including an owner-operator who is certified as a DBE. The DBE who subcontracts work to another DBE receives credit for the total value of the transportation services the subcontracted DBE provides on the contract.

(5) The DBE may also subcontract the work to a non-DBE firm, including from an owner-operator. The DBE who subcontracts the work to a non-DBE is entitled to credit for the total value of transportation services provided by the non-DBE subcontractor not to exceed the value of transportation services provided by DBE-owned trucks on the contract. Additional participation by non-DBE subcontractors receives credit only for the fee or commission it receives as a result of the subcontract arrangement. The value of services performed under subcontract agreements between the DBE and the Contractor will not count towards the DBE contract requirement.

(6) A DBE may lease truck(s) from an established equipment leasing business open to the general public. The lease must indicate that the DBE has exclusive use of and control over the truck. This requirement does not preclude the leased truck from working for others during the term of the lease with the consent of the DBE, so long as the lease gives the DBE absolute priority for use of the leased truck. This type of lease may count toward the DBE's credit as long as the driver is under the DBE's payroll.

(7) Subcontracted/leased trucks shall display clearly on the dashboard the name of the DBE that they are subcontracted/leased to and their own company name if it is not identified on the truck itself. Magnetic door signs are not permitted.

DBE Replacement

When a Contractor has relied on a commitment to a DBE firm (or an approved substitute DBE firm) to meet all or part of a contract goal requirement, the contractor shall not terminate the DBE for convenience. This includes, but is not limited to, instances in which the Contractor seeks to perform the work of the terminated subcontractor with another DBE subcontractor, a non-DBE subcontractor, or with the Contractor's own forces or those of an affiliate. A DBE may only be terminated after receiving the Engineer's written approval based upon a finding of good cause for the termination.

All requests for replacement of a committed DBE firm shall be submitted to the Engineer for approval on Form RF-1 *(DBE Replacement Request).* If the Contractor fails to follow this procedure, the Contractor may be disqualified from further bidding for a period of up to 6 months.

The Contractor shall comply with the following for replacement of a committed DBE:

(A) Performance Related Replacement

When a committed DBE is terminated for good cause as stated above, an additional DBE that was submitted at the time of bid may be used to fulfill the DBE commitment. A good faith effort will only be required for removing a committed DBE if there were no additional DBEs submitted at the time of bid to cover the same amount of work as the DBE that was terminated.

If a replacement DBE is not found that can perform at least the same amount of work as the terminated DBE, the Contractor shall submit a good faith effort documenting the steps taken. Such documentation shall include, but not be limited to, the following:

(1) Copies of written notification to DBEs that their interest is solicited in contracting the work defaulted by the previous DBE or in subcontracting other items of work in the contract.

(2) Efforts to negotiate with DBEs for specific subbids including, at a minimum:

(a) The names, addresses, and telephone numbers of DBEs who were contacted.
(b) A description of the information provided to DBEs regarding the plans and specifications for portions of the work to be performed.

(3) A list of reasons why DBE quotes were not accepted.

(4) Efforts made to assist the DBEs contacted, if needed, in obtaining bonding or insurance required by the Contractor.

(B) Decertification Replacement

(1) When a committed DBE is decertified by the Department after the SAF (*Subcontract Approval Form*) has been received by the Department, the Department will not require the Contractor to solicit replacement DBE participation equal to the remaining work to be performed by the decertified firm. The participation equal to the remaining work performed by the decertified firm will count toward the contract goal requirement.

(2) When a committed DBE is decertified prior to the Department receiving the SAF (*Subcontract Approval Form*) for the named DBE firm, the Contractor shall

take all necessary and reasonable steps to replace the DBE subcontractor with another DBE subcontractor to perform at least the same amount of work to meet the DBE goal requirement. If a DBE firm is not found to do the same amount of work, a good faith effort must be submitted to NCDOT (see A herein for required documentation).

Changes in the Work

When the Engineer makes changes that result in the reduction or elimination of work to be performed by a committed DBE, the Contractor will not be required to seek additional participation. When the Engineer makes changes that result in additional work to be performed by a DBE based upon the Contractor's commitment, the DBE shall participate in additional work to the same extent as the DBE participated in the original contract work.

When the Engineer makes changes that result in extra work, which has more than a minimal impact on the contract amount, the Contractor shall seek additional participation by DBEs unless otherwise approved by the Engineer.

When the Engineer makes changes that result in an alteration of plans or details of construction, and a portion or all of the work had been expected to be performed by a committed DBE, the Contractor shall seek participation by DBEs unless otherwise approved by the Engineer.

When the Contractor requests changes in the work that result in the reduction or elimination of work that the Contractor committed to be performed by a DBE, the Contractor shall seek additional participation by DBEs equal to the reduced DBE participation caused by the changes.

Reports and Documentation

A SAF (*Subcontract Approval Form*) shall be submitted for all work which is to be performed by a DBE subcontractor. The Department reserves the right to require copies of actual subcontract agreements involving DBE subcontractors.

When using transportation services to meet the contract commitment, the Contractor shall submit a proposed trucking plan in addition to the SAF. The plan shall be submitted prior to beginning construction on the project. The plan shall include the names of all trucking firms proposed for use, their certification type(s), the number of trucks owned by the firm, as well as the individual truck identification numbers, and the line item(s) being performed.

Within 30 calendar days of entering into an agreement with a DBE for materials, supplies or services, not otherwise documented by the SAF as specified above, the Contractor shall furnish the Engineer a copy of the agreement. The documentation shall also indicate the percentage (60% or 100%) of expenditures claimed for DBE credit.

Reporting Disadvantaged Business Enterprise Participation

The Contractor shall provide the Engineer with an accounting of payments made to all DBE firms, including material suppliers and contractors at all levels (prime, subcontractor, or second tier subcontractor). This accounting shall be furnished to the Engineer for any given month by the end of the following month. Failure to submit this information accordingly may result in the following action:

(A) Withholding of money due in the next partial pay estimate; or

(B) Removal of an approved contractor from the prequalified bidders' list or the removal of other entities from the approved subcontractors list.

While each contractor (prime, subcontractor, 2nd tier subcontractor) is responsible for accurate accounting of payments to DBEs, it shall be the prime contractor's responsibility to report all monthly and final payment information in the correct reporting manner.

Failure on the part of the Contractor to submit the required information in the time frame specified may result in the disqualification of that contractor and any affiliate companies from further bidding until the required information is submitted.

Failure on the part of any subcontractor to submit the required information in the time frame specified may result in the disqualification of that contractor and any affiliate companies from being approved for work on future DOT projects until the required information is submitted.

Contractors reporting transportation services provided by non-DBE lessees shall evaluate the value of services provided during the month of the reporting period only.

At any time, the Engineer can request written verification of subcontractor payments.

(A) Electronic Bids Reporting

The Contractor shall report the accounting of payments through the Department's DBE Payment Tracking System.

(B) Paper Bids Reporting

The Contractor shall report the accounting of payments on the Department's DBE-IS *(Subcontractor Payment Information)* with each invoice. Invoices will not be processed for payment until the DBE-IS is received.

Failure to Meet Contract Requirements

Failure to meet contract requirements in accordance with Subarticle 102-15(J) of the *2012 Standard Specifications* may be cause to disqualify the Contractor.

CERTIFICATION FOR FEDERAL-AID CONTRACTS:

(3-21-90) SP1 G85

The prospective participant certifies, by signing and submitting this bid or proposal, to the best of his or her knowledge and belief, that:

(A) No Federal appropriated funds have been paid or will be paid, by or on behalf of the undersigned, to any person for influencing or attempting to influence an officer or employee of any Federal agency, a Member of Congress, an officer or employee of Congress, or an employee of a Member of Congress in connection with the awarding of any Federal contract, the making of any Federal grant, the making of any Federal loan, the entering into of any cooperative agreement, and the extension, continuation, renewal, amendment, or modification of any Federal contract, grant, loan, or cooperative agreement.

(B) If any funds other than Federal appropriated funds have been paid or will be paid to any person for influencing or attempting to influence an officer or employee of any Federal agency, a Member of Congress, an officer or employee of Congress, or an employee of a Member of Congress in connection with this Federal contract, grant, loan, or cooperative agreement, the undersigned shall complete and submit Standard Form-LLL, *Disclosure Form to Report Lobbying*, in accordance with its instructions.

This certification is a material representation of fact upon which reliance was placed when this transaction was made or entered into. Submission of this certification is a prerequisite for making or entering into this transaction imposed by *Section 1352, Title 31, U.S. Code*. Any person who fails to file the required certification shall be subject to a civil penalty of not less than $10,000 and not more than $100,000 for each such failure.

The prospective participant also agrees by submitting his or her bid or proposal that he or she shall require that the language of this certification be included in all lower tier subcontracts, which exceed $100,000 and that all such subrecipients shall certify and disclose accordingly.

CONTRACTOR'S LICENSE REQUIREMENTS:

(7-1-95) 102-14 SP1 G88

If the successful bidder does not hold the proper license to perform any plumbing, heating, air conditioning, or electrical work in this contract, he will be required to sublet such work to a contractor properly licensed in accordance with *Article 2 of Chapter 87 of the General Statutes* (licensing of heating, plumbing, and air conditioning contractors) and *Article 4 of Chapter 87* of the *General Statutes* (licensing of electrical contractors).

U.S. DEPARTMENT OF TRANSPORTATION HOTLINE:

(11-22-94) 108-5 SP1 G100

To report bid rigging activities call: **1-800-424-9071**

The U.S. Department of Transportation (DOT) operates the above toll-free hotline Monday through Friday, 8:00 a.m. to 5:00 p.m. eastern time. Anyone with knowledge of possible bid

rigging, bidder collusion, or other fraudulent activities should use the hotline to report such activities.

The hotline is part of the DOT's continuing effort to identify and investigate highway construction contract fraud and abuse is operated under the direction of the DOT Inspector General. All information will be treated confidentially and caller anonymity will be respected.

SUBSURFACE INFORMATION:

(7-1-95) 450 SP1 G112 D

Subsurface information is available on the roadway and structure portions of this project.

LOCATING EXISTING UNDERGROUND UTILITIES:

(3-20-12) 105 SP1 G115

Revise the *2012 Standard Specifications* as follows:

Page 1-43, Article 105-8, line 28, after the first sentence, add the following:

Identify excavation locations by means of pre-marking with white paint, flags, or stakes or provide a specific written description of the location in the locate request.

VALUE ENGINEERING PROPOSAL:

(05-19-15) 104 SP01 G116

Revise the *2012 Standard Specifications* as follows:

Page 1-36, Subarticle 104-12(B) Evaluation of Proposals, lines 42-44, replace the fourth sentence of the second paragraph with the following:

Pending execution of a formal supplemental agreement implementing an approved VEP and transferal of final plans (hard copy and electronic) sealed by an engineer licensed in the State of North Carolina incorporating an approved VEP to the Resident Engineer and the State Value Management Engineer, the Contractor shall remain obligated to perform the work in accordance with the terms of the existing contract.

Page 1-37, Subarticle 104-12(D) Preliminary Review, lines 9-12, replace the first sentence of the first paragraph with the following:

Should the Contractor desire a preliminary review of a possible VEP, before expending considerable time and expense in full development, a copy of the Preliminary VEP shall be submitted to the Resident Engineer and the State Value Management Engineer at ValueManagementUnit@ncdot.gov.

Page 1-37, Subarticle 104-12(E) Final Proposal, lines 22-23, replace the first sentence of the first paragraph with the following:

A copy of the Final VEP shall be submitted by the Contractor to the Resident Engineer and the State Value Management Engineer at ValueManagementUnit@ncdot.gov.

Page 1-38, Subarticle 104-12(F) Modifications, lines 2-8, replace the first paragraph with the following:

To facilitate the preparation of revisions to contract drawings, the Contractor may purchase reproducible copies of drawings for his use through the Department's Value Management Unit. The preparation of new design drawings by or for the Contractor shall be coordinated with the appropriate Design Branch through the State Value Management Engineer. The Contractor shall provide, at no charge to the Department, one set of reproducible drawings of the approved design needed to implement the VEP. Drawings (hard copy and electronic) which are sealed by an engineer licensed in the State of North Carolina shall be submitted to the State Value Management Engineer no later than ten (10) business days after acceptance of a VEP unless otherwise permitted.

Page 1-38, Subarticle 104-12(F) Modifications, line 17, add the following at the end of the third paragraph:

Supplemental agreements executed for design-bid-build contracts shall reflect any realized savings in the corresponding line items. Supplemental agreements executed for design-build contracts shall add one line item deducting the full savings from the total contract price and one line item crediting the Contractor with 50% of the total VEP savings.

Page 1-38, Subarticle 104-12(F) Modifications, lines 45-47, replace the eighth paragraph with the following:

Unless and until a supplemental agreement is executed and issued by the Department and final plans (hard copy and electronic) sealed by an engineer licensed in the State of North Carolina incorporating an approved VEP have been provided to the Resident Engineer and the State Value Management Engineer, the Contractor shall remain obligated to perform the work in accordance with the terms of the existing contract.

RESOURCE CONSERVATION AND ENV. SUSTAINABLE PRACTICES:

(5-21-13) (Rev. 5-19-15) 104-13 SP1 G118

In accordance with North Carolina Executive Order 156, NCGS 130A-309.14(3), and NCGS 136-28.8, it is the objective of the Department to aid in the reduction of materials that become a part of our solid waste stream, to divert materials from landfills, to find ways to recycle and reuse materials, to consider and minimize, where economically feasible, the environmental impacts associated with agency land use and acquisition, construction, maintenance and facility management for the benefit of the Citizens of North Carolina.

To achieve the mission of reducing environmental impacts across the state, the Department is committed to supporting the efforts to initiate, develop and use products and construction methods that incorporate the use of recycled, solid waste products and environmentally sustainable practices in accordance with Article 104-13 of the *Standard Specifications*.

Report the quantities of reused or recycled materials either incorporated in the project or diverted from landfills and any practice that minimizes the environmental impact on the project annually on the Project Construction Reuse and Recycling Reporting Form. The Project Construction Reuse and Recycling Reporting Form and a location tool for local recycling facilities are available at:
http://connect.ncdot.gov/resources/Environmental/Pages/North-Carolina-Recycling-Locations.aspx.

Submit the Project Construction Reuse and Recycling Reporting Form by August 1 annually to valuemanagementunit@ncdot.gov. For questions regarding the form or reporting, please contact the State Value Management Engineer at 919-707-4810.

DOMESTIC STEEL:
(4-16-13) 106 SP1 G120

Revise the *2012 Standard Specifications* as follows:

P**age 1-49, Subarticle 106-1(B) Domestic Steel, lines 2-7,** replace the first paragraph with the following:

All steel and iron products that are permanently incorporated into this project shall be produced in the United States except minimal amounts of foreign steel and iron products may be used provided the combined material cost of the items involved does not exceed 0.1% of the total amount bid for the entire project or $2,500, whichever is greater. If invoices showing the cost of the material are not provided, the amount of the bid item involving the foreign material will be used for calculations. This minimal amount of foreign produced steel and iron products permitted for use is not applicable to high strength fasteners. Domestically produced high strength fasteners are required.

PORTABLE CONCRETE BARRIER - (Partial Payments for Materials):
(7-1-95) (Rev. 8-16-11) 1170-4 SP1 G121

When so authorized by the Engineer, partial materials payments will be made up to 95 percent of the delivered cost of portable concrete barrier, provided that these materials have been delivered on the project and stored in an acceptable manner, and further provided the documents listed in Subarticle 109-5(C) of the *2012 Standard Specifications* have been furnished to the Engineer.

The provisions of Subarticle 109-5(B) of the *2012 Standard Specifications* will apply to the portable concrete barrier.

REMOVABLE PAVEMENT MARKINGS - (Partial Payments for Materials):
(7-1-95) (Rev. 8-16-11) 1205-10 SP1 G124

When so authorized by the Engineer, partial materials payments will be made up to 95 percent of the delivered cost of pavement marking tape, provided that these materials have been delivered on or in the vicinity of the project, stored in an acceptable manner, not to exceed the shelf life recommended by the manufacturer, and further provided the documents listed in Subarticle 109-5(C) of the *2012 Standard Specifications* have been furnished to the Engineer.

The Contractor shall be responsible for the material and the satisfactory performance of the material when used in the work.

The provisions of Article 109-6 of the *2012 Standard Specifications* will not apply to removable pavement marking materials.

MAINTENANCE OF THE PROJECT:
(11-20-07) (Rev. 1-17-12) 104-10 SP1 G125

Revise the *2012 Standard Specifications* as follows:

Page 1-35, Article 104-10 Maintenance of the Project, line 25, add the following after the first sentence of the first paragraph:

All guardrail/guiderail within the project limits shall be included in this maintenance.

Page 1-35, Article 104-10 Maintenance of the Project, line 30, add the following as the last sentence of the first paragraph:

The Contractor shall perform weekly inspections of guardrail and guiderail and shall report damages to the Engineer on the same day of the weekly inspection. *Where damaged guardrail or guiderail is repaired or replaced as a result of maintaining the project in* accordance with this article, such repair or replacement shall be performed within 7 consecutive calendar days of such inspection report.

Page 1-35, Article 104-10 Maintenance of the Project, lines 42-44, replace the last sentence of the last paragraph with the following:

The Contractor will not be directly compensated for any maintenance operations necessary, except for maintenance of guardrail/guiderail, as this work will be considered incidental to the work covered by the various contract items. The provisions of Article 104-7, Extra Work, and Article 104-8, Compensation and Record Keeping will apply to authorized maintenance of guardrail/guiderail. Performance of weekly inspections of guardrail/guiderail, and the damage reports required as described above, will be considered to be an incidental part of the work being paid for by the various contract items.

TWELVE MONTH GUARANTEE:
(7-15-03) 108 SP1 G145

(A) The Contractor shall guarantee materials and workmanship against latent and patent defects arising from faulty materials, faulty workmanship or negligence for a period of twelve months following the date of final acceptance of the work for maintenance and shall replace such defective materials and workmanship without cost to the Department. The Contractor will not be responsible for damage due to faulty design, normal wear and tear, for negligence on the part of the Department, and/or for use in excess of the design.

(B) Where items of equipment or material carry a manufacturer's guarantee for any period in excess of twelve months, then the manufacturer's guarantee shall apply for that particular piece of equipment or material. The Department's first remedy shall be through the manufacturer although the Contractor is responsible for invoking the warranted repair work with the manufacturer. The Contractor's responsibility shall be limited to the term of the manufacturer's guarantee. NCDOT would be afforded the same warranty as provided by the Manufacturer.

This guarantee provision shall be invoked only for major components of work in which the Contractor would be wholly responsible for under the terms of the contract. Examples would include pavement structures, bridge components, and sign structures. This provision will not be used as a mechanism to force the Contractor to return to the project to make repairs or perform additional work that the Department would normally compensate the Contractor for. In addition, routine maintenance activities (i.e. mowing grass, debris removal, ruts in earth shoulders,) are not parts of this guarantee.

Appropriate provisions of the payment and/or performance bonds shall cover this guarantee for the project.

To ensure uniform application statewide the Division Engineer will forward details regarding the circumstances surrounding any proposed guarantee repairs to the Chief Engineer for review and approval prior to the work being performed.

GIFTS FROM VENDORS AND CONTRACTORS:
(12-15-09) 107-1 SP1 G152

By Executive Order 24, issued by Governor Perdue, and *N.C.G.S.§ 133-32,* it is unlawful for any vendor or contractor (i.e. architect, bidder, contractor, construction manager, design professional, engineer, landlord, offeror, seller, subcontractor, supplier, or vendor), to make gifts or to give favors to any State employee of the Governor's Cabinet Agencies (i.e. Administration, Commerce, Correction, Crime Control and Public Safety, Cultural Resources, Environment and Natural Resources, Health and Human Services, Juvenile Justice and Delinquency Prevention, Revenue, Transportation, and the Office of the Governor). This prohibition covers those vendors and contractors who:

(A) Have a contract with a governmental agency; or
(B) Have performed under such a contract within the past year; or
(C) Anticipate bidding on such a contract in the future.

For additional information regarding the specific requirements and exemptions, vendors and contractors are encouraged to review Executive Order 24 and *N.C.G.S. § 133-32*.

Executive Order 24 also encouraged and invited other State Agencies to implement the requirements and prohibitions of the Executive Order to their agencies. Vendors and contractors should contact other State Agencies to determine if those agencies have adopted Executive Order 24.

LIABILITY INSURANCE:

(5-20-14) SP1 G160

Revise the *2012 Standard Specifications* as follows:

Page 1-60, Article 107-15 LIABILITY INSURANCE, line 16, add the following as the second sentence of the third paragraph:

Prior to beginning services, all contractors shall provide proof of coverage issued by a workers' compensation insurance carrier, or a certificate of compliance issued by the Department of Insurance for self-insured subcontractors, irrespective of whether having regularly in service fewer than three employees.

EROSION AND SEDIMENT CONTROL/STORMWATER CERTIFICATION:

(1-16-07) (Rev 9-18-12) 105-16, 225-2, 16 SP1 G180

General

Schedule and conduct construction activities in a manner that will minimize soil erosion and the resulting sedimentation and turbidity of surface waters. Comply with the requirements herein regardless of whether or not a National Pollution discharge Elimination System (NPDES) permit for the work is required.

Establish a chain of responsibility for operations and subcontractors' operations to ensure that the *Erosion and Sediment Control/Stormwater Pollution Prevention Plan* is implemented and maintained over the life of the contract.

(A) *Certified Supervisor* - Provide a certified Erosion and Sediment Control/Stormwater Supervisor to manage the Contractor and subcontractor operations, insure compliance with Federal, State and Local ordinances and regulations, and manage the Quality Control Program.

(B) *Certified Foreman* - Provide a certified, trained foreman for each construction operation that increases the potential for soil erosion or the possible sedimentation and turbidity of surface waters.

(C) *Certified Installer* - Provide a certified installer to install or direct the installation for erosion or sediment/stormwater control practices.

(D) *Certified Designer* - Provide a certified designer for the design of the erosion and sediment control/stormwater component of reclamation plans and, if applicable, for the design of the project erosion and sediment control/stormwater plan.

Roles and Responsibilities

(A) *Certified Erosion and Sediment Control/Stormwater Supervisor* - The Certified Supervisor shall be Level II and responsible for ensuring the erosion and sediment control/stormwater plan is adequately implemented and maintained on the project and for conducting the quality control program. The Certified Supervisor shall be on the project within 24 hours notice from initial exposure of an erodible surface to the project's final acceptance. Perform the following duties:

(1) Manage Operations - Coordinate and schedule the work of subcontractors so that erosion and sediment control/stormwater measures are fully executed for each operation and in a timely manner over the duration of the contract.

(a) Oversee the work of subcontractors so that appropriate erosion and sediment control/stormwater preventive measures are conformed to at each stage of the work.
(b) Prepare the required National Pollutant Discharge Elimination System (NPDES) Inspection Record and submit to the Engineer.
(c) Attend all weekly or monthly construction meetings to discuss the findings of the NPDES inspection and other related issues.
(d) Implement the erosion and sediment control/stormwater site plans requested.
(e) Provide any needed erosion and sediment control/stormwater practices for the Contractor's temporary work not shown on the plans, such as, but not limited to work platforms, temporary construction, pumping operations, plant and storage yards, and cofferdams.
(f) Acquire applicable permits and comply with requirements for borrow pits, dewatering, and any temporary work conducted by the Contractor in jurisdictional areas.
(g) Conduct all erosion and sediment control/stormwater work in a timely and workmanlike manner.
(h) Fully perform and install erosion and sediment control/stormwater work prior to any suspension of the work.
(i) Coordinate with Department, Federal, State and Local Regulatory agencies on resolution of erosion and sediment control/stormwater issues due to the Contractor's operations.
(j) Ensure that proper cleanup occurs from vehicle tracking on paved surfaces or any location where sediment leaves the Right-of-Way.
(k) Have available a set of erosion and sediment control/stormwater plans that are initialed and include the installation date of Best Management Practices. These practices shall include temporary and permanent groundcover and be properly updated to reflect necessary plan and field

changes for use and review by Department personnel as well as regulatory agencies.

(2) Requirements set forth under the NPDES Permit - The Department's NPDES Stormwater permit (NCS000250) outlines certain objectives and management measures pertaining to construction activities. The permit references *NCG010000, General Permit to Discharge Stormwater* under the NPDES, and states that the Department shall incorporate the applicable requirements into its delegated Erosion and Sediment Control Program for construction activities disturbing one or more acres of land. The Department further incorporates these requirements on all contracted bridge and culvert work at jurisdictional waters, regardless of size. Some of the requirements are, but are not limited to:

(a) Control project site waste to prevent contamination of surface or ground waters of the state, i.e. from equipment operation/maintenance, construction materials, concrete washout, chemicals, litter, fuels, lubricants, coolants, hydraulic fluids, any other petroleum products, and sanitary waste.

(b) Inspect erosion and sediment control/stormwater devices and stormwater discharge outfalls at least once every 7 calendar days, twice weekly for construction related *Federal Clean Water Act, Section 303(d)* impaired streams with turbidity violations, and within 24 hours after a significant rainfall event of 0.5 inch that occurs within a 24 hour period.

(c) Maintain an onsite rain gauge or use the Department’s Multi-Sensor Precipitation Estimate website to maintain a daily record of rainfall amounts and dates.

(d) Maintain erosion and sediment control/stormwater inspection records for review by Department and Regulatory personnel upon request.

(e) Implement approved reclamation plans on all borrow pits, waste sites and staging areas.

(f) Maintain a log of turbidity test results as outlined in the Department's Procedure for Monitoring Borrow Pit Discharge.

(g) Provide secondary containment for bulk storage of liquid materials.

(h) Provide training for employees concerning general erosion and sediment control/stormwater awareness, the Department’s NPDES Stormwater Permit NCS000250 requirements, and the applicable requirements of the *General Permit, NCG010000*.

(i) Report violations of the NPDES permit to the Engineer immediately who will notify the Division of Water Quality Regional Office within 24 hours of becoming aware of the violation.

(3) Quality Control Program - Maintain a quality control program to control erosion, prevent sedimentation and follow provisions/conditions of permits. The quality control program shall:

(a) Follow permit requirements related to the Contractor and subcontractors' construction activities.
(b) Ensure that all operators and subcontractors on site have the proper erosion and sediment control/stormwater certification.
(c) Notify the Engineer when the required certified erosion and sediment control/stormwater personnel are not available on the job site when needed.
(d) Conduct the inspections required by the NPDES permit.
(e) Take corrective actions in the proper timeframe as required by the NPDES permit for problem areas identified during the NPDES inspections.
(f) Incorporate erosion control into the work in a timely manner and stabilize disturbed areas with mulch/seed or vegetative cover on a section-by-section basis.
(g) Use flocculants approved by state regulatory authorities where appropriate and where required for turbidity and sedimentation reduction.
(h) Ensure proper installation and maintenance of temporary erosion and sediment control devices.
(i) Remove temporary erosion or sediment control devices when they are no longer necessary as agreed upon by the Engineer.
(j) The Contractor's quality control and inspection procedures shall be subject to review by the Engineer. Maintain NPDES inspection records and make records available at all times for verification by the Engineer.

(B) *Certified Foreman* - At least one Certified Foreman shall be onsite for each type of work listed herein during the respective construction activities to control erosion, prevent sedimentation and follow permit provisions:

(1) Foreman in charge of grading activities
(2) Foreman in charge of bridge or culvert construction over jurisdictional areas
(3) Foreman in charge of utility activities

The Contractor may request to use the same person as the Level II Supervisor and Level II Foreman. This person shall be onsite whenever construction activities as described above are taking place. This request shall be approved by the Engineer prior to work beginning.

The Contractor may request to name a single Level II Foreman to oversee multiple construction activities on small bridge or culvert replacement projects. This request shall be approved by the Engineer prior to work beginning.

(C) *Certified Installers* - Provide at least one onsite, Level I Certified Installer for each of the following erosion and sediment control/stormwater crew:

(1) Seeding and Mulching
(2) Temporary Seeding
(3) Temporary Mulching

(4) Sodding
(5) Silt fence or other perimeter erosion/sediment control device installations
(6) Erosion control blanket installation
(7) Hydraulic tackifier installation
(8) Turbidity curtain installation
(9) Rock ditch check/sediment dam installation
(10) Ditch liner/matting installation
(11) Inlet protection
(12) Riprap placement
(13) Stormwater BMP installations (such as but not limited to level spreaders, retention/detention devices)
(14) Pipe installations within jurisdictional areas

If a Level I *Certified Installer* is not onsite, the Contractor may substitute a Level II Foreman for a Level I Installer, provided the Level II Foreman is not tasked to another crew requiring Level II Foreman oversight.

(D) *Certified Designer* - Include the certification number of the Level III Certified Designer on the erosion and sediment control/stormwater component of all reclamation plans and if applicable, the certification number of the Level III Certified Designer on the design of the project erosion and sediment control/stormwater plan.

Preconstruction Meeting

Furnish the names of the *Certified Erosion and Sediment Control/Stormwater Supervisor, Certified Foremen, Certified Installers* and *Certified Designer* and notify the Engineer of changes in certified personnel over the life of the contract within 2 days of change.

Ethical Responsibility

Any company performing work for the North Carolina Department of Transportation has the ethical responsibility to fully disclose any reprimand or dismissal of an employee resulting from improper testing or falsification of records.

Revocation or Suspension of Certification

Upon recommendation of the Chief Engineer to the certification entity, certification for *Supervisor*, *Certified Foremen*, *Certified Installers* and *Certified Designer* may be revoked or suspended with the issuance of an *Immediate Corrective Action (ICA), Notice of Violation (NOV),* or C*ease and Desist Order* for erosion and sediment control/stormwater related issues.

The Chief Engineer may recommend suspension or permanent revocation of certification due to the following:

(A) Failure to adequately perform the duties as defined within this certification provision.

(B) Issuance of an ICA, NOV, or Cease and Desist Order.
(C) Failure to fully perform environmental commitments as detailed within the permit conditions and specifications.
(D) Demonstration of erroneous documentation or reporting techniques.
(E) Cheating or copying another candidate's work on an examination.
(F) Intentional falsification of records.
(G) Directing a subordinate under direct or indirect supervision to perform any of the above actions.
(H) Dismissal from a company for any of the above reasons.
(I) Suspension or revocation of one's certification by another entity.

Suspension or revocation of a certification will be sent by certified mail to the certificant and the Corporate Head of the company that employs the certificant.

A certificant has the right to appeal any adverse action which results in suspension or permanent revocation of certification by responding, in writing, to the Chief Engineer within 10 calendar days after receiving notice of the proposed adverse action.

Chief Engineer
1536 Mail Service Center
Raleigh, NC 27699-1536

Failure to appeal within 10 calendar days will result in the proposed adverse action becoming effective on the date specified on the certified notice. Failure to appeal within the time specified will result in a waiver of all future appeal rights regarding the adverse action taken. The certificant will not be allowed to perform duties associated with the certification during the appeal process.

The Chief Engineer will hear the appeal and make a decision within 7 days of hearing the appeal. Decision of the Chief Engineer will be final and will be made in writing to the certificant.

If a certification is temporarily suspended, the certificant shall pass any applicable written examination and any proficiency examination, at the conclusion of the specified suspension period, prior to having the certification reinstated.

Measurement and Payment

Certified Erosion and Sediment Control/Stormwater Supervisor, Certified Foremen, Certified Installers and *Certified Designer* will be incidental to the project for which no direct compensation will be made.

PROCEDURE FOR MONITORING BORROW PIT DISCHARGE:

(2-20-07) (Rev. 3-19-13) 105-16, 230, 801 SP1 G181

Water discharge from borrow pit sites shall not cause surface waters to exceed 50 NTUs (nephelometric turbidity unit) in streams not designated as trout waters and 10 NTUs in streams, lakes or reservoirs designated as trout waters. For lakes and reservoirs not designated as trout

waters, the turbidity shall not exceed 25 NTUs. If the turbidity exceeds these levels due to natural background conditions, the existing turbidity level shall not be increased.

If during any operating day, the downstream water quality exceeds the standard, the Contractor shall do all of the following:

(A) Either cease discharge or modify the discharge volume or turbidity levels to bring the downstream turbidity levels into compliance, or

(B) Evaluate the upstream conditions to determine if the exceedance of the standard is due to natural background conditions. If the background turbidity measurements exceed the standard, operation of the pit and discharge can continue as long as the stream turbidity levels are not increased due to the discharge.

(C) Measure and record the turbidity test results (time, date and sampler) at all defined sampling locations 30 minutes after startup and at a minimum, one additional sampling of all sampling locations during that 24-hour period in which the borrow pit is discharging.

(D) Notify DWQ within 24 hours of any stream turbidity standard exceedances that are not brought into compliance.

During the Environmental Assessment required by Article 230-4 of the *2012 Standard Specifications*, the Contractor shall define the point at which the discharge enters into the State's surface waters and the appropriate sampling locations. Sampling locations shall include points upstream and downstream from the point at which the discharge enters these waters. Upstream sampling location shall be located so that it is not influenced by backwater conditions and represents natural background conditions. Downstream sampling location shall be located at the point where complete mixing of the discharge and receiving water has occurred.

The discharge shall be closely monitored when water from the dewatering activities is introduced into jurisdictional wetlands. Any time visible sedimentation (deposition of sediment) on the wetland surface is observed, the dewatering activity will be suspended until turbidity levels in the stilling basin can be reduced to a level where sediment deposition does not occur. Staining of wetland surfaces from suspended clay particles, occurring after evaporation or infiltration, does not constitute sedimentation. No activities shall occur in wetlands that adversely affect the functioning of a wetland. Visible sedimentation will be considered an indication of possible adverse impacts on wetland use.

The Engineer will perform independent turbidity tests on a random basis. These results will be maintained in a log within the project records. Records will include, at a minimum, turbidity test results, time, date and name of sampler. Should the Department's test results exceed those of the Contractor's test results, an immediate test shall be performed jointly with the results superseding the previous test results of both the Department and the Contractor.

The Contractor shall use the *NCDOT Turbidity Reduction Options for Borrow Pits Matrix*, available at http://www.ncdot.gov/doh/operations/dp_chief_eng/roadside/fieldops/downloads/

Files/TurbidityReductionOptionSheet.pdf to plan, design, construct, and maintain BMPs to address water quality standards. Tier I Methods include stilling basins which are standard compensatory BMPs. Other Tier I methods are noncompensatory and shall be used when needed to meet the stream turbidity standards. Tier II Methods are also noncompensatory and are options that may be needed for protection of rare or unique resources or where special environmental conditions exist at the site which have led to additional requirements being placed in the DWQ's 401 Certifications and approval letters, Isolated Wetland Permits, Riparian Buffer Authorization or a DOT Reclamation Plan's Environmental Assessment for the specific site. Should the Contractor exhaust all Tier I Methods on a site exclusive of rare or unique resources or special environmental conditions, Tier II Methods may be required by regulators on a case by case basis per supplemental agreement.

The Contractor may use cation exchange capacity (CEC) values from proposed site borings to plan and develop the bid for the project. CEC values exceeding 15 milliequivalents per 100 grams of soil may indicate a high potential for turbidity and should be avoided when dewatering into surface water is proposed.

No additional compensation for monitoring borrow pit discharge will be paid.

EMPLOYMENT:

(11-15-11) (Rev. 1-17-12) 108, 102 SP1 G184

Revise the *2012 Standard Specifications* as follows:

Page 1-20, Subarticle 102-15(O), delete and replace with the following:

(O) Failure to restrict a former Department employee as prohibited by Article 108-5.

Page 1-65, Article 108-5 Character of Workmen, Methods, and Equipment, line 32, delete all of line 32, the first sentence of the second paragraph and the first word of the second sentence of the second paragraph.

STATE HIGHWAY ADMINISTRATOR TITLE CHANGE:

(9-18-12) SP1 G185

Revise the *2012 Standard Specifications* as follows:

Replace all references to "State Highway Administrator" with "Chief Engineer".

SUBLETTING OF CONTRACT:
(11-18-2014) 108-6 SP1 G186

Revise the *2012 Standard Specifications* as follows:

Page 1-66, Article 108-6 Subletting of Contract, line 37, add the following as the second sentence of the first paragraph:

All requests to sublet work shall be submitted within 30 days of the date of availability or prior to expiration of 20% of the contract time, whichever date is later, unless otherwise approved by the Engineer.

Page 1-67, Article 108-6 Subletting of Contract, line 7, add the following as the second sentence of the fourth paragraph:

Purchasing materials for subcontractors is not included in the percentage of work required to be performed by the Contractor. If the Contractor sublets items of work but elects to purchase material for the subcontractor, the value of the material purchased will be included in the total dollar amount considered to have been sublet.

MOBILIZATION:
(09-15-15) 800 SP1 G194

Revise the *2012 Standard Specifications* as follows:

Page 8-1, Subarticle 800-2 Measurement and Payment, add the following as the 5th paragraph:

For projects that have a delayed availability date of 90 calendar days or more after contract execution, the first mobilization payment may be for the verified actual cost of paid bond premiums. This payment will only be made upon request by the contractor with supporting documentation including invoice and proof of payment. This payment will be limited to 1% of the amount bid for the contract and the subsequent mobilization payment will be reduced by an equal amount to follow the payment schedule as shown above. In no case will more than 5% of the amount bid for the contract be paid before the last partial pay estimate.

PROJECT SPECIAL PROVISIONS

ROADWAY

CLEARING AND GRUBBING - METHOD III:

(4-6-06) (Rev.8-18-15) 200 SP2 R02B

Perform clearing on this project to the limits established by Method "III" shown on Standard Drawing No. 200.03 of the *2012 Roadway Standard Drawings*. Conventional clearing methods may be used except where permit drawings or conditions have been included in the proposal which require certain areas to be cleared by hand methods.

BURNING RESTRICTIONS:

(7-1-95) 200, 210, 215 SP2 R05

Open burning is not permitted on any portion of the right-of-way limits established for this project. Do not burn the clearing, grubbing or demolition debris designated for disposal and generated from the project at locations within the project limits, off the project limits or at any waste or borrow sites in this county. Dispose of the clearing, grubbing and demolition debris by means other than burning, according to state or local rules and regulations.

SHOULDER AND FILL SLOPE MATERIAL:

(5-21-02) 235, 560 SP2 R45 A

Description

Perform the required shoulder and slope construction for this project in accordance with the applicable requirements of Section 560 and Section 235 of the *2012 Standard Specifications*.

Measurement and Payment

Where the material has been obtained from an authorized stockpile or from a borrow source and *Borrow Excavation* is not included in the contract, no direct payment will be made for this work, as the cost of this work will be part of the work being paid at the contract lump sum price for *Grading*. If *Borrow Excavation* is included in this contract and the material has been obtained from an authorized stockpile or from a borrow source, measurement and payment will be as provided in Section 230 of the *2012 Standard Specifications* for *Borrow Excavation*.

TEMPORARY PAVEMENT:

(8-15-00) (Rev. 11-19-13) 1101

Construct the temporary pavement required on this project in accordance with the plans and as directed by the Engineer.

After the temporary pavement has served its purpose remove the portions deemed unsuitable for use as a permanent part of the project as directed by the Engineer. Place pavement and earth material removed from the temporary pavement areas in embankments or dispose of in waste areas furnished by the Contractor.

Pipe culverts removed from the temporary pavement remain the property of the Contractor. Pipe culverts that are removed will be measured and will be paid at the contract unit price per linear foot for *Pipe Removal*. Payment for the construction of the temporary pavement will be made at the contract unit prices for the various items involved.

No direct payment will be made for removing earth material and pavement, as the cost of same shall be included in the lump sum price bid for *Grading*. Such prices and payments will be full compensation for the work of removing pavement and earth material; removing pipe culverts; and for placing earth material and pavement in embankments or disposing of earth material and pavement in waste areas.

PIPE INSTALLATION:

(11-20-12) (Rev. 8-18-15) 300 SP3 R01

Revise the *2012 Standard Specifications* as follows:

Page 3-1, Article 300-2, Materials, line 15, in the materials table, replace "Flowable Fill" and "Geotextiles" with the following:

Item	Section
Flowable Fill, Excavatable	1000-6
Grout, Type 2	1003
Geotextiles, Type 4	1056

Page 3-1, Article 300-2, Materials, lines 23-24, replace sentence with the following:

Provide foundation conditioning geotextile and geotextile to wrap pipe joints in accordance with Section 1056 for Type 4 geotextile.

Page 3-3, Subarticle 300-6(A), Rigid Pipe, line 2, in the first paragraph, replace "an approved non-shrink grout." with "grout." and line 4, in the second paragraph, replace "filtration geotextile" with "geotextile".

Page 3-3, Article 300-7, Backfilling, lines 37-38, in the first and second sentences of the fifth paragraph, replace "Excavatable flowable fill" with "Flowable fill".

FLOWABLE FILL:

(9-17-02) (Rev 1-17-12) 300, 340, 450, 1000, 1530, 1540, 1550 SP3 R30

Description

This work consists of all work necessary to place flowable fill in accordance with these provisions, the plans, and as directed.

Materials

Refer to Division 10 of the *2012 Standard Specifications*.

Item	Section
Flowable Fill	1000-6

Construction Methods

Discharge flowable fill material directly from the truck into the space to be filled, or by other approved methods. The mix may be placed full depth or in lifts as site conditions dictate. The Contractor shall provide a method to plug the ends of the existing pipe in order to contain the flowable fill.

Measurement and Payment

At locations where flowable fill is called for on the plans and a pay item for flowable fill is included in the contract, *Flowable Fill* will be measured in cubic yards and paid as the actual number of cubic yards that have been satisfactorily placed and accepted. Such price and payment will be full compensation for all work covered by this provision including, but not limited to, the mix design, furnishing, hauling, placing and containing the flowable fill.

Payment will be made under:

Pay Item	Pay Unit
Flowable Fill	Cubic Yard

PIPE LINER:

Furnish and install pipe liner as shown at recommended locations on the plans. Pipe liner should be from NCDOT Approved Product Listing for drainage pipe liners at the following link or an approved equal:

https://connect.ncdot.gov/resources/Products/Pages/default.aspx

Pipe liner should maintain equivalent hydraulic conveyance as existing pipe. Pipe liner is subject to approval by the Engineer.

56”x40” Ellipse Pipe Liner will be measured and paid as the actual number of linear feet of pipe liner that has been incorporated into the completed and accepted work.

Pay Item	Pay Unit
56”x40” Ellipse Pipe Liner	Linear Foot

ASPHALT PAVEMENTS - SUPERPAVE:
(6-19-12) (Rev. 10-20-15) 605, 609, 610, 650 SP6 R01

Revise the *2012 Standard Specifications* as follows:

Page 6-3, Article 605-7, APPLICATION RATES AND TEMPERATURES, replace this article, including Table 605-1, with the following:

Apply tack coat uniformly across the existing surface at target application rates shown in Table 605-1.

TABLE 605-1 APPLICATION RATES FOR TACK COAT	
Existing Surface	**Target Rate (gal/sy)**
	Emulsified Asphalt
New Asphalt	0.04 ± 0.01
Oxidized or Milled Asphalt	0.06 ± 0.01
Concrete	0.08 ± 0.01

Apply tack coat at a temperature within the ranges shown in Table 605-2. Tack coat shall not be overheated during storage, transport or at application.

TABLE 605-2 APPLICATION TEMPERATURE FOR TACK COAT	
Asphalt Material	**Temperature Range**
Asphalt Binder, Grade PG 64-22	350 - 400°F
Emulsified Asphalt, Grade RS-1H	130 - 160°F
Emulsified Asphalt, Grade CRS-1	130 - 160°F
Emulsified Asphalt, Grade CRS-1H	130 - 160°F
Emulsified Asphalt, Grade HFMS-1	130 - 160°F
Emulsified Asphalt, Grade CRS-2	130 - 160°F

Page 6-7, Article 609-3, FIELD VERIFICATION OF MIXTURE AND JOB MIX FORMULA ADJUSTMENTS, lines 35-37, delete the second sentence of the second paragraph.

Page 6-18, Article 610-1 DESCRIPTION, lines 40-41, delete the last sentence of the last paragraph.

Page 6-19, Subarticle 610-3(A), Mix Design-General, line 5, add the following as the first paragraph:

Warm mix asphalt (WMA) is allowed for use at the Contractor's option in accordance with the NCDOT Approved Products List for WMA Technologies available at:

https://connect.ncdot.gov/resources/Materials/MaterialsResources/Warm%20Mix%20Asphalt%20Approved%20List.pdf

Page 6-20, Subarticle 610-3(C), Job Mix Formula (JMF), lines 47-48, replace the last sentence of the third paragraph with the following:

The JMF mix temperature shall be within the ranges shown in Table 610-1 unless otherwise approved.

Page 6-21, Subarticle 610-3(C) Job Mix Formula (JMF), replace Table 610-1 with the following:

TABLE 610-1
MIXING TEMPERATURE AT THE ASPHALT PLANT

Binder Grade	JMF Mix Temperature
PG 58-28; PG 64-22	250 - 290ºF
PG 70-22	275- 305ºF
PG 76-22	300- 325ºF

Page 6-21, Subarticle 610-3(C) Job Mix Formula (JMF), lines 1-2, in the first sentence of the first paragraph, delete "and compaction". Lines 4-7, delete the second paragraph and replace with the following:

When RAS is used, the JMF mix temperature shall be established at 275ºF or higher.

Page 6-22, Article 610-4, WEATHER, TEMPERATURE AND SEASONAL LIMITATIONS FOR PRODUCING AND PLACING ASPHALT MIXTURES, lines 15-17, replace the second sentence of the first paragraph with the following:

Do not place asphalt material when the air or surface temperatures, measured at the location of the paving operation away from artificial heat, do not meet Table 610-5.

Page 6-23, Article 610-4, WEATHER, TEMPERATURE AND SEASONAL LIMITATIONS FOR PRODUCING AND PLACING ASPHALT MIXTURES, replace Table 610-5 with the following:

TABLE 610-5
PLACEMENT TEMPERATURES FOR ASPHALT

Asphalt Concrete Mix Type	Minimum Surface and Air Temperature
B25.0B, C	35°F
I19.0B, C, D	35°F
SF9.5A, S9.5B	40°F[A]
S9.5C, S12.5C	45°F[A]
S9.5D, S12.5D	50°F

A. For the final layer of surface mixes containing recycled asphalt shingles (RAS), the minimum surface and air temperature shall be 50ºF.

Page 6-23, Subarticle 610-5(A), General, lines 33-34, replace the last sentence of the third paragraph with the following:

Produce the mixture at the asphalt plant within ±25 ºF of the JMF mix temperature. The temperature of the mixture, when discharged from the mixer, shall not exceed 350ºF.

Page 6-26, Article 610-7, HAULING OF ASPHALT MIXTURE, lines 22-23, in the fourth sentence of the first paragraph replace "so as to overlap the top of the truck bed and" with "to". Line 28, in the last paragraph, replace "+15 ºF to -25 ºF of the specified JMF temperature." with "±25 ºF of the specified JMF mix temperature."

Page 6-41, Subarticle 650-3(B), Mix Design Criteria, replace Table 650-1 with the following:

TABLE 650-1
OGAFC GRADATION CRITERIA

Sieve Size (mm)	*Type FC-1*	*Type FC-1 Modified*	*Type FC-2 Modified*
19.0	-	-	100
12.5	100	100	80 - 100
9.50	75 - 100	75 - 100	55 - 80
4.75	25 - 45	25 - 45	15 - 30
2.36	5 - 15	5 - 15	5 - 15
0.075	1.0 - 3.0	1.0 - 3.0	2.0 - 4.0

ASPHALT BINDER CONTENT OF ASPHALT PLANT MIXES:

(11-21-00) (Rev. 7-17-12) 609 SP6 R15

The approximate asphalt binder content of the asphalt concrete plant mixtures used on this project will be as follows:

Asphalt Concrete Base Course	Type B 25.0__	4.4%
Asphalt Concrete Intermediate Course	Type I 19.0__	4.8%
Asphalt Concrete Surface Course	Type S 4.75A	6.8%
Asphalt Concrete Surface Course	Type SA-1	6.8%
Asphalt Concrete Surface Course	Type SF 9.5A	6.7%
Asphalt Concrete Surface Course	Type S 9.5__	6.0%
Asphalt Concrete Surface Course	Type S 12.5__	5.6%

The actual asphalt binder content will be established during construction by the Engineer within the limits established in the *2012 Standard Specifications.*

ASPHALT PLANT MIXTURES:

(7-1-95) 609 SP6 R20

Place asphalt concrete base course material in trench sections with asphalt pavement spreaders made for the purpose or with other equipment approved by the Engineer.

PRICE ADJUSTMENT - ASPHALT BINDER FOR PLANT MIX:
(11-21-00) 620 SP6 R25

Price adjustments for asphalt binder for plant mix will be made in accordance with Section 620 of the *2012 Standard Specifications*.

The base price index for asphalt binder for plant mix is **$ 464.62** per ton.

This base price index represents an average of F.O.B. selling prices of asphalt binder at supplier's terminals on **September 1, 2015**.

FINAL SURFACE TESTING NOT REQUIRED:
(5-18-04) (Rev. 5-15-12) 610 SP6 R45

Final surface testing is not required on this project.

5-FOOT STAMPED CONCRETE SIDEWALK:

Construct the "*5' Stamped Concrete Sidewalk*" in accordance with Section 848 of the *Standard Specifications for Roads and Structures* and with the details shown on the contract plans. The Contractor shall coordinate with the City of Lexington, Mr. Rick Austin, PE, Director of Public Works (336-248-3930) for details related to pattern, depth and dimensions of stamping, color, and sealing.

5' Stamped Concrete Sidewalk will be measured and paid for in square yards measured along the surface of the stamped and accepted work. Such price includes the construction of the sidewalk and the stamping of the sidewalk surface.

Payment will be made under:

Pay Item	**Pay Unit**
5' Stamped Concrete Sidewalk	Square Yards

TEMPORARY SIDEWALK:
(8-15-00) (Rev. 4-21-15) 1101 SP2 R30A(Rev)

Construct the temporary sidewalks required on this project in accordance with the plans or as directed by the Engineer.

After the sidewalks have served their purpose, remove the portions deemed unsuitable for use as a permanent part of the project as directed by the Engineer. Place pavement and/or earth material removed as part of the sidewalks in embankments or dispose of in waste areas furnished by the Contractor.

Sidewalks removed remain the property of the Contractor. No direct payment will be made for removing the sidewalks as the cost of same shall be included in the lump sum price bid for *Grading*. Such prices and payments will be full compensation for the work of removing and

placing earth material, and/or sidewalk/pavement in embankments or disposing of material and sidewalk/pavement in waste areas.

Temporary Sidewalk will be measured and paid in square yards, measured along the surface of the completed and accepted work.

Pay Item	**Pay Unit**
Temporary Sidewalk	Square Yard

GUARDRAIL ANCHOR UNITS, TYPE 350 TL-2:

(10-21-08) (Rev. 7-21-15) 862 SP08 R064

Description

Furnish and install guardrail anchor units in accordance with the details in the plans, the applicable requirements of Section 862 of the *2012 Standard Specifications*, and at locations shown in the plans.

Materials

Furnish guardrail anchor units listed on the NCDOT Approved Products List at https://apps.dot.state.nc.us/vendor/approvedproducts/ or approved equal.

Prior to installation the Contractor shall submit to the Engineer:

(A) FHWA acceptance letter for each guardrail anchor unit certifying it meets the requirements of NCHRP Report 350, Test Level 2 in accordance with Article 106-2 of the *2012 Standard Specifications*.

(B) Certified working drawings and assembling instructions from the manufacturer for each guardrail anchor unit in accordance with Article 105-2 of the *2012 Standard Specifications*.

No modifications shall be made to the guardrail anchor unit without the express written permission from the manufacturer. Perform installation in accordance with the details in the plans, and details and assembling instructions furnished by the manufacturer.

Construction Methods

Guardrail end delineation is required on all approach and trailing end sections for both temporary and permanent installations. Guardrail end delineation consists of yellow reflective sheeting applied to the entire end section of the guardrail in accordance with Article 1088-3 of the *2012 Standard Specifications* and is incidental to the cost of the guardrail anchor unit.

Measurement and Payment

Measurement and payment will be made in accordance with Article 862-6 of the *2012 Standard Specifications*.

Payment will be made under:

Pay Item	**Pay Unit**
Guardrail Anchor Units, Type 350 TL-2	Each

GUARDRAIL ANCHOR UNITS, TYPE 350 (TL-3):

(4-20-04) (Rev. 7-21-15) 862 SP08 R065

Description

Furnish and install guardrail anchor units in accordance with the details in the plans, the applicable requirements of Section 862 of the *2012 Standard Specifications*, and at locations shown in the plans.

Materials

Furnish guardrail anchor units listed on the NCDOT Approved Products List at https://apps.dot.state.nc.us/vendor/approvedproducts/ or approved equal.

Prior to installation the Contractor shall submit to the Engineer:

(A) FHWA acceptance letter for each guardrail anchor unit certifying it meets the requirements of NCHRP Report 350, Test Level 3, in accordance with Article 106-2 of the *2012 Standard Specifications*.

(B) Certified working drawings and assembling instructions from the manufacturer for each guardrail anchor unit in accordance with Article 105-2 of the *2012 Standard Specifications*.

No modifications shall be made to the guardrail anchor unit without the express written permission from the manufacturer. Perform installation in accordance with the details in the plans, and details and assembling instructions furnished by the manufacturer.

Construction Methods

Guardrail end delineation is required on all approach and trailing end sections for both temporary and permanent installations. Guardrail end delineation consists of yellow reflective sheeting applied to the entire end section of the guardrail in accordance with Article 1088-3 of the *2012 Standard Specifications* and is incidental to the cost of the guardrail anchor unit.

Measurement and Payment

Measurement and payment will be made in accordance with Article 862-6 of the *2012 Standard Specifications*.

Payment will be made under:

Pay Item	**Pay Unit**
Guardrail Anchor Units, Type 350	Each

DETECTABLE WARNINGS FOR PROPOSED CURB RAMPS:

(6-15-10) (Rev. 8-16-11) 848 SP8 R126

Description

Construct detectable warnings consisting of integrated raised truncated domes on proposed concrete curb ramps in accordance with the *2012 Standard Specifications*, plan details, the requirements of the *28 CFR Part 36 ADA Standards for Accessible Design* and this provision.

Materials

Detectable warning for proposed curb ramps shall consist of integrated raised truncated domes. The description, size and spacing shall conform to Section 848 of the *2012 Standard Specifications.*

Use material for detectable warning systems as shown herein. Material and coating specifications must be stated in the Manufacturers Type 3 Certification and all Detectable Warning systems must be on the NCDOT Approved Products List.

Install detectable warnings created from one of the following materials: precast concrete blocks or bricks, clay paving brick, gray or ductile iron castings, mild steel, stainless steel, and engineered plastics, rubber or composite tile. Only one material type for detectable warning will be permitted per project, unless otherwise approved by the Engineer.

(A) Detectable Warnings shall consist of a base with integrated raised truncated domes, and when constructed of precast concrete they shall conform to the material requirements of Article 848-2 of the *2012 Standard Specifications.*

(B) Detectable Warnings shall consist of a base with integrated raised truncated domes, and may be comprised of other materials including, but not limited, to clay paving brick, gray iron or ductile iron castings, mild steel, stainless steel, and engineered plastics, rubber or composite tile, which are cast into the concrete of the curb ramps. The material shall have an integral color throughout the thickness of the material. The detectable warning shall include fasteners or anchors for attachment in the concrete and shall be furnished as a system from the manufacturer.

Prior to installation, the Contractor shall submit to the Engineer assembling instructions from the manufacturer for each type of system used in accordance with Article 105-2 of the *2012 Standard Specifications*. The system shall be furnished as a kit containing all consumable materials and consumable tools, required for the application. They shall be capable of being affixed to or anchored in the concrete curb ramp, including green

concrete (concrete that has set but not appreciably hardened). The system shall be solvent free and contain no volatile organic compounds (VOC). The static coefficient of friction shall be 0.8 or greater when measured on top of the truncated domes and when measured between the domes in accordance with ASTM C1028 (dry and wet). The system shall be resistant to deterioration due to exposure to sunlight, water, salt or adverse weather conditions and impervious to degradation by motor fuels, lubricants and antifreeze.

(C) When steel or gray iron or ductile iron casting products are provided, only products that meet the requirements of Subarticle 106-1(B) of the *2012 Standard Specifications* may be used. Submit to the Engineer a Type 6 Certification, catalog cuts and installation procedures at least 30 days prior to installation for all.

Construction Methods

(A) Prior to placing detectable warnings in proposed concrete curb ramps, adjust the existing subgrade to the proper grade and in accordance with Article 848-3 of the *2012 Standard Specifications*.

(B) Install all detectable warning in proposed concrete curb ramps in accordance with the manufacturer's recommendations.

Measurement and Payment

Detectable Warnings installed for construction of proposed curb ramps will not be paid for separately. Such payment will be included in the price bid for *Concrete Curb Ramps*.

FOUNDATIONS AND ANCHOR ROD ASSEMBLIES FOR METAL POLES:

(1-17-12) (Rev. 5-19-15) 9, 14, 17 SP9 R05

Description

Foundations for metal poles include foundations for signals, cameras, overhead and dynamic message signs (DMS) and high mount and low level light standards supported by metal poles or upright trusses. Foundations consist of footings with pedestals and drilled piers with or without grade beams or wings. Anchor rod assemblies consist of anchor rods (also called anchor bolts) with nuts and washers on the exposed ends of rods and nuts and a plate or washers on the other ends of rods embedded in the foundation.

Construct concrete foundations with the required resistances and dimensions and install anchor rod assemblies in accordance with the contract and accepted submittals. Construct drilled piers consisting of cast-in-place reinforced concrete cylindrical sections in excavated holes. Provide temporary casings or polymer slurry as needed to stabilize drilled pier excavations. Use a prequalified Drilled Pier Contractor to construct drilled piers for metal poles. Define "excavation" and "hole" as a drilled pier excavation and "pier" as a drilled pier.

This provision does not apply to materials and anchor rod assemblies for standard foundations for low level light standards. See Section 1405 of the *2012 Standard Specifications* and Standard Drawing No. 1405.01 of the *2012 Roadway Standard Drawings* for materials and anchor rod assemblies for standard foundations. For construction of standard foundations for low level light standards, standard foundations are considered footings in this provision.

This provision does not apply to foundations for signal pedestals; see Section 1743 of the *2012 Standard Specifications* and Standard Drawing No. 1743.01 of the *2012 Roadway Standard Drawings*.

Materials

Refer to the *2012 Standard Specifications*.

Item	**Section**
Conduit	1091-3
Grout, Type 2	1003
Polymer Slurry	411-2(B)
Portland Cement Concrete	1000
Reinforcing Steel	1070
Rollers and Chairs	411-2(C)
Temporary Casings	411-2(A)

Provide Type 3 material certifications in accordance with Article 106-3 of the *2012 Standard Specifications* for conduit, rollers, chairs and anchor rod assemblies. Store steel materials on blocking at least 12" above the ground and protect it at all times from damage; and when placing in the work make sure it is free from dirt, dust, loose mill scale, loose rust, paint, oil or other foreign materials. Load, transport, unload and store foundation and anchor rod assembly materials so materials are kept clean and free of damage. Bent, damaged or defective materials will be rejected.

Use conduit type in accordance with the contract. Use Class A concrete for footings and pedestals, Class Drilled Pier concrete for drilled piers and Class AA concrete for grade beams and wings including portions of drilled piers above bottom of wings elevations. Corrugated temporary casings may be accepted at the discretion of the Engineer. A list of approved polymer slurry products is available from:
connect.ncdot.gov/resources/Geological/Pages/Products.aspx

Provide anchor rod assemblies in accordance with the contract consisting of the following:

(A) Straight anchor rods,

(B) Heavy hex top and leveling nuts and flat washers on exposed ends of rods, and

(C) Nuts and either flat plates or washers on the other ends of anchor rods embedded in foundations.

Do not use lock washers. Use steel anchor rods, nuts and washers that meet ASTM F1554 for Grade 55 rods and Grade A nuts. Use steel plates and washers embedded in concrete with a thickness of at least 1/4". Galvanize anchor rods and exposed nuts and washers in accordance with Article 1076-4 of the *2012 Standard Specifications*. It is not necessary to galvanize nuts, plates and washers embedded in concrete.

Construction Methods

Install the required size and number of conduits in foundations in accordance with the plans and accepted submittals. Construct top of piers, footings, pedestals, grade beams and wings flat, level and within 1" of elevations shown in the plans or approved by the Engineer. Provide an Ordinary Surface finish in accordance with Subarticle 825-6(B) of the *2012 Standard Specifications* for portions of foundations exposed above finished grade. Do not remove anchor bolt templates or pedestal or grade beam forms or erect metal poles or upright trusses onto foundations until concrete attains a compressive strength of at least 3,000 psi.

(A) Drilled Piers

Before starting drilled pier construction, hold a predrill meeting to discuss the installation, monitoring and inspection of the drilled piers. Schedule this meeting after the Drilled Pier Contractor has mobilized to the site. The Resident or Division Traffic Engineer, Contractor and Drilled Pier Contractor Superintendent will attend this predrill meeting.

Do not excavate holes, install piles or allow equipment wheel loads or vibrations within 20 ft of completed piers until 16 hours after Drilled Pier concrete reaches initial set.

Check for correct drilled pier alignment and location before beginning drilling. Check plumbness of holes frequently during drilling.

Construct drilled piers with the minimum required diameters shown in the plans. Install piers with tip elevations no higher than shown in the plans or approved by the Engineer.

Excavate holes with equipment of the sizes required to construct drilled piers. Depending on the subsurface conditions encountered, drilling through rock and boulders may be required. Do not use blasting for drilled pier excavations.

Contain and dispose of drilling spoils and waste concrete as directed and in accordance with Section 802 of the *2012 Standard Specifications*. Drilling spoils consist of all materials and fluids removed from excavations.

If unstable, caving or sloughing materials are anticipated or encountered, stabilize holes with temporary casings and/or polymer slurry. Do not use telescoping temporary casings. If it becomes necessary to replace a temporary casing during drilling, backfill the

excavation, insert a larger casing around the casing to be replaced or stabilize the excavation with polymer slurry before removing the temporary casing.

If temporary casings become stuck or the Contractor proposes leaving casings in place, temporary casings should be installed against undisturbed material. Unless otherwise approved, do not leave temporary casings in place for mast arm poles and cantilever signs. The Engineer will determine if casings may remain in place. If the Contractor proposes leaving temporary casings in place, do not begin drilling until a casing installation method is approved.

Use polymer slurry and additives to stabilize holes in accordance with the slurry manufacturer's recommendations. Provide mixing water and equipment suitable for polymer slurry. Maintain polymer slurry at all times so slurry meets Table 411-3 of the *2012 Standard Specifications* except for sand content.

Define a "sample set" as slurry samples collected from mid-height and within 2 ft of the bottom of holes. Take sample sets from excavations to test polymer slurry immediately after filling holes with slurry, at least every 4 hours thereafter and immediately before placing concrete. Do not place Drilled Pier concrete until both slurry samples from an excavation meet the required polymer slurry properties. If any slurry test results do not meet the requirements, the Engineer may suspend drilling until both samples from a sample set meet the required slurry properties.

Remove soft and loose material from bottom of holes using augers to the satisfaction of the Engineer. Assemble rebar cages and place cages and Drilled Pier concrete in accordance with Subarticle 411-4(E) of the *2012 Standard Specifications* except for the following:

(1) Inspections for tip resistance and bottom cleanliness are not required,
(2) Temporary casings may remain in place if approved, and
(3) Concrete placement may be paused near the top of pier elevations for anchor rod assembly installation and conduit placement or
(4) If applicable, concrete placement may be stopped at bottom of grade beam or wings elevations for grade beam or wing construction.

If wet placement of concrete is anticipated or encountered, do not place Drilled Pier concrete until a concrete placement procedure is approved. If applicable, temporary casings and fluids may be removed when concrete placement is paused or stopped in accordance with the exceptions above provided holes are stable. Remove contaminated concrete from exposed Drilled Pier concrete after removing casings and fluids. If holes are unstable, do not remove temporary casings until a procedure for placing anchor rod assemblies and conduit or constructing grade beams or wings is approved.

Use collars to extend drilled piers above finished grade. Remove collars after Drilled Pier concrete sets and round top edges of piers.

If drilled piers are questionable, pile integrity testing (PIT) and further investigation may be required in accordance with Article 411-5 of the *2012 Standard Specifications*. A drilled pier will be considered defective in accordance with Subarticle 411-5(D) of the *2012 Standard Specifications* and drilled pier acceptance is based in part on the criteria in Article 411-6 of the *2012 Standard Specifications* except for the top of pier tolerances in Subarticle 411-6(C) of the *2012 Standard Specifications*.

If a drilled pier is under further investigation, do not grout core holes, backfill around the pier or perform any work on the drilled pier until the Engineer accepts the pier. If the drilled pier is accepted, dewater and grout core holes and backfill around the pier with approved material to finished grade. If the Engineer determines a pier is unacceptable, remediation is required in accordance with Article 411-6 of the *2012 Standard Specifications*. No extension of completion date or time will be allowed for remediation of unacceptable drilled piers or post repair testing.

Permanently embed a plate in or mark top of piers with the pier diameter and depth, size and number of vertical reinforcing bars and the minimum compressive strength of the concrete mix at 28 days.

(B) Footings, Pedestals, Grade Beams and Wings

Excavate as necessary for footings, grade beams and wings in accordance with the plans, accepted submittals and Section 410 of the *2012 Standard Specifications*. If unstable, caving or sloughing materials are anticipated or encountered, shore foundation excavations as needed with an approved method. Notify the Engineer when foundation excavation is complete. Do not place concrete or reinforcing steel until excavation dimensions and foundation material are approved.

Construct cast-in-place reinforced concrete footings, pedestals, grade beams and wings with the dimensions shown in the plans and in accordance with Section 825 of the *2012 Standard Specifications*. Use forms to construct portions of pedestals and grade beams protruding above finished grade. Provide a chamfer with a 3/4" horizontal width for pedestal and grade beam edges exposed above finished grade. Backfill and fill in accordance with Article 410-8 of the *2012 Standard Specifications*. Proper compaction around footings and wings is critical for foundations to resist uplift and torsion forces. Place concrete against undisturbed soil and do not use forms for standard foundations for low level light standards.

(C) Anchor Rod Assemblies

Size anchor rods for design and the required projection above top of foundations. Determine required anchor rod projections from nut, washer and base plate thicknesses, the protrusion of 3 to 5 anchor rod threads above top nuts after tightening and the distance of one nut thickness between top of foundations and bottom of leveling nuts.

Protect anchor rod threads from damage during storage and installation of anchor rod assemblies. Before placing anchor rods in foundations, turn nuts onto and off rods past leveling nut locations. Turn nuts with the effort of one workman using an ordinary wrench without a cheater bar. Report any thread damage to the Engineer that requires extra effort to turn nuts.

Arrange anchor rods symmetrically about center of base plate locations as shown in the plans. Set anchor rod elevations based on required projections above top of foundations. Securely brace and hold rods in the correct position, orientation and alignment with a steel template. Do not weld to reinforcing steel, temporary casings or anchor rods.

Install top and leveling (bottom) nuts, washers and the base plate for each anchor rod assembly in accordance with the following procedure:

(1) Turn leveling nuts onto anchor rods to a distance of one nut thickness between the top of foundation and bottom of leveling nuts. Place washers over anchor rods on top of leveling nuts.

(2) Determine if nuts are level using a flat rigid template on top of washers. If necessary, lower leveling nuts to level the template in all directions or if applicable, lower nuts to tilt the template so the metal pole or upright truss will lean as shown in the plans. If leveling nuts and washers are not in full contact with the template, replace washers with galvanized beveled washers.

(3) Verify the distance between the foundation and leveling nuts is no more than one nut thickness.

(4) Place base plate with metal pole or upright truss over anchor rods on top of washers. High mount luminaires may be attached before erecting metal poles but do not attach cables, mast arms or trusses to metal poles or upright trusses at this time.

(5) Place washers over anchor rods on top of base plate. Lubricate top nut bearing surfaces and exposed anchor rod threads above washers with beeswax, paraffin or other approved lubricant.

(6) Turn top nuts onto anchor rods. If nuts are not in full contact with washers or washers are not in full contact with the base plate, replace washers with galvanized beveled washers.

(7) Tighten top nuts to snug-tight with the full effort of one workman using a 12" wrench. Do not tighten any nut all at once. Turn top nuts in increments. Follow a star pattern cycling through each nut at least twice.

(8) Repeat (7) for leveling nuts.

(9) Replace washers above and below the base plate with galvanized beveled washers if the slope of any base plate face exceeds 1:20 (5%), any washer is not in firm contact with the base plate or any nut is not in firm contact with a washer. If any washers are replaced, repeat (7) and (8).

(10) With top and leveling nuts snug-tight, mark each top nut on a corner at the intersection of 2 flats and a corresponding reference mark on the base plate. Mark top nuts and base plate with ink or paint that is not water-soluble. Use the turn-of-nut method for pretensioning. Do not pretension any nut all at once. Turn top nuts in increments for a total turn that meets the following nut rotation requirements:

NUT ROTATION REQUIREMENTS (Turn-of-Nut Pretensioning Method)	
Anchor Rod Diameter, inch	**Requirement**
≤ 1 1/2	1/3 turn (2 flats)
> 1 1/2	1/6 turn (1 flat)

Follow a star pattern cycling through each top nut at least twice.

(11) Ensure nuts, washers and base plate are in firm contact with each other for each anchor rod. Cables, mast arms and trusses may now be attached to metal poles and upright trusses.

(12) Between 4 and 14 days after pretensioning top nuts, use a torque wrench calibrated within the last 12 months to check nuts in the presence of the Engineer. Completely erect mast arm poles and cantilever signs and attach any hardware before checking top nuts for these structures. Check that top nuts meet the following torque requirements:

TORQUE REQUIREMENTS	
Anchor Rod Diameter, inch	**Requirement, ft-lb**
7/8	180
1	270
1 1/8	380
1 1/4	420
≥ 1 1/2	600

If necessary, retighten top nuts in the presence of the Engineer with a calibrated torque wrench to within ± 10 ft-lb of the required torque. Do not overtighten top nuts.

(13) Do not grout under base plate.

Measurement and Payment

Foundations and anchor rod assemblies for metal poles and upright trusses will be measured and paid for elsewhere in the contract.

No payment will be made for temporary casings that remain in drilled pier excavations. No payment will be made for PIT. No payment will be made for further investigation of defective piers. Further investigation of piers that are not defective will be paid as extra work in accordance with Article 104-7 of the *2012 Standard Specifications*. No payment will be made for remediation of unacceptable drilled piers or post repair testing.

MATERIALS:

(2-21-12) (Rev. 10-20-15) 1000, 1002, 1005, 1018, 1024, 1050, 1056, 1074, 1078, 1080, 1081, 1086, 1084, 1087, 1092 SP10 R01

Revise the *2012 Standard Specifications* as follows:

Page 10-1, Article 1000-1, DESCRIPTION, lines 9-10, replace the last sentence of the first paragraph with the following:

Type IL, IP, IS or IT blended cement may be used instead of Portland cement.

Page 10-1, Article 1000-1, DESCRIPTION, line 14, add the following:

If any change is made to the mix design, submit a new mix design (with the exception of an approved pozzolan source change).

If any major change is made to the mix design, also submit new test results showing the mix design conforms to the criteria. Define a major change to the mix design as:

(1) A source change in coarse aggregate, fine aggregate or cement.

(2) A pozzolan class or type change (e.g. Class F fly ash to Class C fly ash).

(3) A quantitative change in coarse aggregate (applies to an increase or decrease greater than 5%), fine aggregate (applies to an increase or decrease greater than 5%), water (applies to an increase only), cement (applies to a decrease only), or pozzolan (applies to an increase or decrease greater than 5%).

Use materials which do not produce a mottled appearance through rusting or other staining of the finished concrete surface.

Page 10-1, Article 1000-2, MATERIALS, line 16; Page 10-8, Subarticle 1000-7(A), Materials, line 8; and Page 10-18, Article 1002-2, MATERIALS, line 9, add the following to the table of item references:

Item	**Section**
Type IL Blended Cement	1024-1

Page 10-1, Subarticle 1000-3(A), Composition and Design, lines 25-27, replace the second paragraph with the following:

Fly ash may be substituted for cement in the mix design up to 30% at a rate of 1.0 lb of fly ash to each pound of cement replaced.

Page 10-2, Subarticle 1000-3(A), Composition and Design, lines 12-21, delete the third paragraph through the sixth paragraph beginning with "If any change is made to the mix design, submit…" through "…(applies to a decrease only)."

Page 10-5, Table 1000-1, REQUIREMENTS FOR CONCRETE, replace with the following:

TABLE 1000-1
REQUIREMENTS FOR CONCRETE

Class of Concrete	Min. Comp. Strength at 28 days	Maximum Water-Cement Ratio				Consistency Max. Slump		Cement Content			
		Air-Entrained Concrete		Non Air-Entrained Concrete		Vibrated	Non-Vibrated	Vibrated		Non- Vibrated	
		Rounded Aggregate	Angular Aggre-gate	Rounded Aggregate	Angular Aggre-gate			Min.	Max.	Min.	Max.
Units	*psi*					*inch*	*inch*	*lb/cy*	*lb/cy*	*lb/cy*	*lb/cy*
AA	4,500	0.381	0.426	-	-	3.5	-	639	715	-	-
AA Slip Form	4,500	0.381	0.426	-	-	1.5	-	639	715	-	-
Drilled Pier	4,500	-	-	0.450	0.450	-	5-7 dry 7-9 wet	-	-	640	800
A	3,000	0.488	0.532	0.550	0.594	3.5	4	564	-	602	-
B	2,500	0.488	0.567	0.559	0.630	1.5 machine-placed 2.5 hand-placed	4	508	-	545	-
Sand Light-weight	4,500	-	0.420	-	-	4	-	715	-	-	-
Latex Modified	3,000 7 day	0.400	0.400	-	-	6	-	658	-	-	-
Flowable Fill excavatable	150 max. at 56 days	as needed	as needed	as needed	as needed	-	Flow-able	-	-	40	100
Flowable Fill non-excavatable	125	as needed	as needed	as needed	as needed	-	Flow-able	-	-	100	as needed
Pavement	4,500 design, field 650 flexural, design only	0.559	0.559	-	-	1.5 slip form 3.0 hand place	-	526	-	-	-
Precast	See Table 1077-1	as needed	as needed	-	-	6	as needed	as needed	as needed	as needed	as needed
Prestress	per contract	See Table 1078-1	See Table 1078-1	-	-	8	-	564	as needed	-	-

Page 10-6, Subarticle 1000-4(I), Use of Fly Ash, lines 36-2, replace the first paragraph with the following:

Fly ash may be substituted for cement in the mix design up to 30% at a rate of 1.0 lb of fly ash to each pound of cement replaced. Use Table 1000-1 to determine the maximum allowable water-cementitious material (cement + fly ash) ratio for the classes of concrete listed.

Page 10-7, Table 1000-3, MAXIMUM WATER-CEMENTITIOUS MATERIAL RATIO, delete the table.

Page 10-7, Article 1000-5, HIGH EARLY STRENGTH PORTLAND CEMENT CONCRETE, lines 30-31, delete the second sentence of the third paragraph.

Page 10-19, Article 1002-3, SHOTCRETE FOR TEMPORARY SUPPORT OF EXCAVATIONS, line 30, add the following at the end of Section 1002:

(H) Handling and Storing Test Panels

Notify the Area Materials Engineer when preconstruction or production test panels are made within 24 hours of shooting the panels. Field cure and protect test panels from damage in accordance with ASTM C1140 until the Department transports panels to the Materials and Tests Regional Laboratory for coring.

Page 10-23, Table 1005-1, AGGREGATE GRADATION-COARSE AGGREGATE, replace with the following:

TABLE 1005-1
AGGREGATE GRADATION - COARSE AGGREGATE

Percentage of Total by Weight Passing

Std. Size #	2"	1 1/2"	1"	3/4"	1/2"	3/8"	#4	#8	#10	#16	#40	#200	Remarks
4	100	90-100	20-55	0-15	-	0-5	-	-	-	-	-	**A**	Asphalt Plant Mix
467M	100	95-100	-	35-70	-	0-30	0-5	-	-	-	-	**A**	Asphalt Plant Mix
5	-	100	90-100	20-55	0-10	0-5	-	-	-	-	-	**A**	AST, Sediment Control Stone
57	-	100	95-100	-	25-60	-	0-10	0-5	-	-	-	**A**	AST, Str. Concrete, Shoulder Drain, Sediment Control Stone
57M	-	100	95-100	-	25-45	-	0-10	0-5	-	-	-	**A**	AST, Concrete Pavement
6M	-	-	100	90-100	20-55	0-20	0-8	-	-	-	-	**A**	AST
67	-	-	100	90-100	-	20-55	0-10	0-5	-	-	-	**A**	AST, Str. Concrete, Asphalt Plant Mix
78M	-	-	-	100	98-100	75-100	20-45	0-15	-	-	-	**A**	Asphalt Plant Mix, AST, Str. Conc, Weep Hole Drains
14M	-	-	-	-	-	100	35-70	5-20	-	0-8	-	**A**	Asphalt Plant Mix, AST, Weep Hole Drains, Str. Concrete
9	-	-	-	-	-	100	85-100	10-40	-	0-10	-	**A**	AST
ABC	-	100	75-97	-	55-80	-	35-55	-	25-45	-	14-30	4-12[B]	Aggregate Base Course, Aggregate Stabilization
ABC (M)	-	100	75-100	-	45-79	-	20-40	-	0-25	-	-	0-12[B]	Maintenance Stabilization
Light-weight[C]	-	-	-	-	100	80-100	5-40	0-20	-	0-10	-	0-2.5	AST

A. See Subarticle 1005-4(A).
B. See Subarticle 1005-4(B).
C. For Lightweight Aggregate used in Structural Concrete, see Subarticle 1014-2(E)(6).

Page 10-40, Tables 1018-1 and 1018-2, PIEDMONT, WESTERN AND COASTAL AREA CRITERIA FOR ACCEPTANCE OF BORROW MATERIAL, under second column in both tables, replace second row with the following:

Acceptable, but not to be used in the top 3 ft of embankment or backfill

Page 10-46, Article 1024-1, PORTLAND CEMENT, line 33, add the following as the ninth paragraph:

Use Type IL blended cement that meets AASHTO M 240, except that the limestone content is limited to between 5 and 12% by weight and the constituents shall be interground. Class F fly ash can replace a portion of Type IL blended cement and shall be replaced as outlined in Subarticle 1000-4(I) for Portland cement. For mixes that contain cement with alkali content between 0.6% and 1.0% and for mixes that contain a reactive aggregate documented by the Department, use a pozzolan in the amount shown in Table 1024-1.

Page 10-46, Table 1024-1, POZZOLANS FOR USE IN PORTLAND CEMENT CONCRETE, replace with the following:

TABLE 1024-1 POZZOLANS FOR USE IN PORTLAND CEMENT CONCRETE	
Pozzolan	**Rate**
Class F Fly Ash	20% - 30% by weight of required cement content with 1.0 lb Class F fly ash per lb of cement replaced
Ground Granulated Blast Furnace Slag	35%-50% by weight of required cement content with 1.0 lb slag per lb of cement replaced
Microsilica	4%-8% by weight of required cement content with 1.0 lb microsilica per lb of cement replaced

Page 10-47, Subarticle 1024-3(B), Approved Sources, lines 16-18, replace the second sentence of the second paragraph with the following:

Tests shall be performed by AASHTO's designated National Transportation Product Evaluation Program (NTPEP) laboratory for concrete admixture testing.

Page 10-65, Article 1050-1, GENERAL, line 41, replace the first sentence with the following:

All fencing material and accessories shall meet Section 106.

Page 10-73, Article 1056-1, DESCRIPTION, lines 7-8, delete the first sentence of the second paragraph and replace with the following:

Use geotextile fabrics that are on the NCDOT Approved Products List.

Page 10-73, Article 1056-2, HANDLING AND STORING, line 17, replace "mechanically stabilized earth (MSE) wall faces" with "temporary wall faces".

Page 10-73, Article 1056-4, GEOTEXTILES, line 33, add the following after the first sentence in the second paragraph:

Geotextiles will be identified by the product name printed directly on the geotextile. When geotextiles are not marked with a product name or marked with only a manufacturing plant identification code, geotextiles will be identified by product labels attached to the geotextile wrapping. When identification is based on labels instead of markings, unwrap geotextiles just before use in the presence of the Engineer to confirm that the product labels on both ends of the outside of the geotextile outer wrapping match the labels affixed to both ends of the inside of the geotextile roll core. Partial geotextile roles without the product name printed on the geotextile or product labels affixed to the geotextile roll core may not be used.

Page 10-74, Table 1056-1, GEOTEXTILE REQUIREMENTS, replace with the following:

TABLE 1056-1
GEOTEXTILE REQUIREMENTS

Property	**Requirement**					**Test Method**
	Type 1	**Type 2**	**Type 3[A]**	**Type 4**	**Type 5[B]**	
Typical Application	*Shoulder Drains*	*Under Rip Rap*	*Temporary Silt Fence*	*Soil Stabilization*	*Temporary Walls*	
Elongation (MD & CD)	≥ 50%	≥ 50%	≤ 25%	< 50%	< 50%	ASTM D4632
Grab Strength (MD & CD)	Table 1[D], Class 3	Table 1[D], Class 1	100 lb[C]	Table 1[D], Class 3	-	ASTM D4632
Tear Strength (MD & CD)			-			ASTM D4533
Puncture Strength			-			ASTM D6241
Ultimate Tensile Strength (MD & CD)	-	-	-	-	2,400 lb/ft[C] (unless required otherwise in the contract)	ASTM D4595
Permittivity	Table 2[D], 15% to 50% *in Situ* Soil Passing No. 200[E]		Table 7[D]	Table 5[D]	0.20 sec^{-1},[C]	ASTM D4491
Apparent Opening Size					0.60 mm[F]	ASTM D4751
UV Stability (Retained Strength)					70%[C, G]	ASTM D4355

A. Minimum roll width of 36" required.
B. Minimum roll width of 13 ft required.
C. MARV per Article 1056-3.
D. AASHTO M 288.
E. US Sieve No. per AASHTO M 92.
F. Maximum average roll value.
G. After 500 hours of exposure.

Page 10-74, Article 1056-5, GEOCOMPOSITES, lines 7-8, replace the first sentence with the following:

Provide geocomposite drain strips with a width of at least 12" and Type 1 geotextiles attached to drainage cores that meet Table 1056-2.

Page 10-115, Subarticle 1074-7(B), Gray Iron Castings, lines 10-11, replace the first two sentences with the following:

Supply gray iron castings meeting all facets of AASHTO M 306 excluding proof load. Proof load testing will only be required for new casting designs during the design process, and conformance to M306 loading (40,000 lbs.) will be required only when noted on the design documents.

Page 10-126, Table 1078-1, REQUIREMENTS FOR CONCRETE, replace with the following:

TABLE 1078-1 REQUIREMENTS FOR CONCRETE		
Property	**28 Day Design Compressive Strength 6,000 psi or less**	**28 Day Design Compressive Strength greater than 6,000 psi**
Maximum Water/Cementitious Material Ratio	0.45	0.40
Maximum Slump without HRWR	3.5"	3.5"
Maximum Slump with HRWR	8"	8"
Air Content (upon discharge into forms)	5 + 2%	5 + 2%

Page 10-151, Article 1080-4, INSPECTION AND SAMPLING, lines 18-22, replace (B), (C) and (D) with the following:

(B) At least 3 panels prepared as specified in 5.5.10 of AASHTO M 300, Bullet Hole Immersion Test.

(C) At least 3 panels of 4"x6"x1/4" for the Elcometer Adhesion Pull Off Test, ASTM D4541.

(D) A certified test report from an approved independent testing laboratory for the Salt Fog Resistance Test, Cyclic Weathering Resistance Test, and Bullet Hole Immersion Test as specified in AASHTO M 300.

(E) A certified test report from an approved independent testing laboratory that the product has been tested for slip coefficient and meets AASHTO M253, Class B.

Page 10-161, Subarticle 1081-1(A), Classifications, lines 29-33, delete first 3 sentences of the description for Type 2 and replace with the following:

Type 2 - A low-modulus, general-purpose adhesive used in epoxy mortar repairs. It may be used to patch spalled, cracked or broken concrete where vibration, shock or expansion and contraction are expected.

Page 10-162, Subarticle 1081-1(A), Classifications, lines 4-7, delete the second and third sentences of the description for Type 3A. **Lines 16-22,** delete Types 6A, 6B and 6C.

Page 10-162, Subarticle 1081-1(B), Requirements, lines 26-30, replace the second paragraph with the following:

For epoxy resin systems used for embedding dowel bars, threaded rods, rebar, anchor bolts and other fixtures in hardened concrete, the manufacturer shall submit test results showing that the bonding system will obtain 125% of the specified required yield strength of the fixture. Furnish certification that, for the particular bolt grade, diameter and embedment depth required, the anchor system will not fail by adhesive failure and that there is no movement of the anchor bolt. For certification and anchorage, use 3,000 psi as the minimum Portland cement concrete compressive strength used in this test. Use adhesives that meet Section 1081.

List the properties of the adhesive on the container and include density, minimum and maximum temperature application, setting time, shelf life, pot life, shear strength and compressive strength.

Page 10-163, Table 1081-1, PROPERTIES OF MIXED EPOXY RESIN SYSTEMS, replace with the following:

TABLE 1081-1
PROPERTIES OF MIXED EPOXY RESIN SYSTEMS

Property	Type 1	Type 2	Type 3	Type 3A	Type 4A	Type 4B	Type 5
Viscosity-Poises at 77°F ± 2°F	Gel	10-30	25-75	Gel	40-150	40-150	1-6
Spindle No.	-	3	4	--	4	4	2
Speed (RPM)	-	20	20	--	10	10	50
Pot Life (Minutes)	20-50	30-60	20-50	5-50	40-80	40-80	20-60
Minimum Tensile Strength at 7 days (psi)	1,500	2,000	4,000	4,000	1,500	1,500	4,000
Tensile Elongation at 7 days (%)	30 min.	30 min.	2-5	2-5	5-15	5-15	2-5
Min. Compressive Strength of 2". mortar cubes at 24 hours	3,000 (Neat)	4,000-	6,000-	6,000 (Neat)	3,000	3,000	6,000
Min. Compressive Strength of 2" mortar cubes at 7 days	5,000 (Neat)	-	-	-	-	5,000	-
Maximum Water Absorption (%)	1.5	1.0	1.0	1.5	1.0	1.0	1.0
Min. Bond Strength Slant Shear Test at 14 days (psi)	1,500	1,500	2,000	2,000	1,500	1,500	1,500

Page 10-164, Subarticle 1081-1(E), Prequalification, lines 31-33, replace the second sentence of the first paragraph with the following:

Manufacturers choosing to supply material for Department jobs must submit an application through the Value Management Unit with the following information for each type and brand name:

Page 10-164, Subarticle 1081-1(E)(3), line 37, replace with the following:

(3) Type of the material in accordance with Articles 1081-1 and 1081-4,

Page 10-165, Subarticle 1081-1(E)(6), line 1, in the first sentence of the first paragraph replace "AASHTO M 237" with "the specifications".

Page 10-165, Subarticle 1081-1(E), Prequalification, line 9-10, delete the second sentence of the last paragraph.

Page 10-165, Subarticle 1081-1(F), Acceptance, line 14, in the first sentence of the first paragraph replace "Type 1" with "Type 3".

Page 10-169, Subarticle 1081-3(G), Anchor Bolt Adhesives, delete this subarticle.

Page 10-170, Article 1081-3, HOT BITUMEN, line 9, add the following at the end of Section 1081:

1081-4 EPOXY RESIN ADHESIVE FOR BONDING TRAFFIC MARKINGS

(A) General

This section covers epoxy resin adhesive for bonding traffic markers to pavement surfaces.

(B) Classification

The types of epoxies and their uses are as shown below:

Type I – Rapid Setting, High Viscosity, Epoxy Adhesive. This type of adhesive provides rapid adherence to traffic markers to the surface of pavement.

Type II – Standard Setting, High Viscosity, Epoxy Adhesive. This type of adhesive is recommended for adherence of traffic markers to pavement surfaces when rapid set is not required.

Type III – Rapid Setting, Low Viscosity, Water Resistant, Epoxy Adhesive. This type of rapid setting adhesive, due to its low viscosity, is appropriate only for use with embedded traffic markers.

Type IV – Standard Set Epoxy for Blade Deflecting-Type Plowable Markers.

(C) Requirements

Epoxies shall conform to the requirements set forth in AASHTO M 237.

(D) Prequalification

Refer to Subarticle 1081-1(E).

(E) Acceptance

Refer to Subarticle 1081-1(F).

Page 10-173, Article 1084-2, STEEL SHEET PILES, lines 37-38, replace first paragraph with the following:

Steel sheet piles detailed for permanent applications shall be hot rolled and meet ASTM A572 or ASTM A690 unless otherwise required by the plans. Steel sheet piles shall be coated as required

by the plans. Galvanized sheet piles shall be coated in accordance with Section 1076. Metallized sheet piles shall be metallized in accordance to the Project Special Provision "Thermal Sprayed Coatings (Metallization)" with an 8 mil, 99.9% aluminum alloy coating and a 0.5 mil seal coating. Any portion of the metallized sheet piling encased in concrete shall receive a barrier coat. The barrier coat shall be an approved waterborne coating with a low-viscosity which readily absorbs into the pores of the aluminum thermal sprayed coating. The waterborne coating shall be applied at a spreading rate that results in a theoretical 1.5 mil dry film thickness. The manufacturer shall issue a letter of certification that the resin chemistry of the waterborne coating is compatible with the 99.9% aluminum thermal sprayed alloy and suitable for tidal water applications.

Page 10-174, Subarticle 1086-1(B)(1), Epoxy, lines 18-24, replace with the following:

The epoxy shall meet Article 1081-4.

The 2 types of epoxy adhesive which may be used are Type I, Rapid Setting, and Type II, Standard Setting. Use Type II when the pavement temperature is above 60°F or per the manufacturer's recommendations whichever is more stringent. Use Type I when the pavement temperature is between 50°F and 60°F or per the manufacturer's recommendations whichever is more stringent. Epoxy adhesive Type I, Cold Set, may be used to attach temporary pavement markers to the pavement surface when the pavement temperature is between 32°F and 50°F or per the manufacturer's recommendations whichever is more stringent.

Page 10-175, Subarticle 1086-2(E), Epoxy Adhesives, line 27, replace "Section 1081" with "Article 1081-4".

Page 10-177, Subarticle 1086-3(E), Epoxy Adhesives, line 22, replace "Section 1081" with "Article 1081-4".

Page 10-179, Subarticle 1087-4(A), Composition, lines 39-41, replace the third paragraph with the following:

All intermixed and drop-on glass beads shall not contain more than 75 ppm arsenic or 200 ppm lead.

Page 10-180, Subarticle 1087-4(B), Physical Characteristics, line 8, replace the second paragraph with the following:

All intermixed and drop-on glass beads shall comply with NCGS § 136-30.2 and 23 USC § 109(r).

Page 10-181, Subarticle 1087-7(A), Intermixed and Drop-on Glass Beads, line 24, add the following after the first paragraph:

Use X-ray Fluorescence for the normal sampling procedure for intermixed and drop-on beads, without crushing, to check for any levels of arsenic and lead. If any arsenic or lead is detected, the sample shall be crushed and repeat the test using X-ray Fluorescence. If the X-ray Fluorescence test shows more than a LOD of 5 ppm, test the beads using United States Environmental Protection Agency Method 6010B, 6010C or 3052 for no more than 75 ppm arsenic or 200 ppm lead.

SELECT MATERIAL, CLASS III, TYPE 3:
(1-17-12) 1016, 1044 SP10 R05

Revise the *2012 Standard Specifications* as follows:

Page 10-39, Article 1016-3, CLASS III, add the following after line 14:

Type 3 Select Material

Type 3 select material is a natural or manufactured fine aggregate material meeting the following gradation requirements and as described in Sections 1005 and 1006:

Percentage of Total by Weight Passing							
3/8"	#4	#8	#16	#30	#50	#100	#200
100	95-100	65-100	35-95	15-75	5-35	0-25	0-8

Page 10-39, Article 1016-3, CLASS III, line 15, replace "either type" with "Type 1, Type 2 or Type 3".

Page 10-62, Article 1044-1, line 36, delete the sentence and replace with the following:

Subdrain fine aggregate shall meet Class III select material, Type 1 or Type 3.

Page 10-63, Article 1044-2, line 2, delete the sentence and replace with the following:

Subdrain coarse aggregate shall meet Class V select material.

SHOULDER AND SLOPE BORROW:
(3-19-13) 1019 SP10 R10

Use soil in accordance with Section 1019 of the *2012 Standard Specifications*. Use soil consisting of loose, friable, sandy material with a PI greater than 6 and less than 25 and a pH ranging from 5.5 to 7.0.

Soil with a pH ranging from 4.0 to 5.5 will be accepted without further testing if additional limestone is provided in accordance with the application rates shown in Table 1019-1A. Soil type is identified during the soil analysis. Soils with a pH above 7.0 require acidic amendments to be added. Submit proposed acidic amendments to the Engineer for review and approval. Soils with a pH below 4.0 or that do not meet the PI requirements shall not be used.

pH TEST RESULT	**Sandy Soils Additional Rate (lbs. / Acre)**	**Silt Loam Soils Additional Rate (lbs. / Acre)**	**Clay Loam Soils Additional Rate (lbs. / Acre)**
4.0 - 4.4	1,000	4,000	6,000
4.5 - 4.9	500	3,000	5,000
5.0 - 5.4	NA	2,000	4,000

Note: Limestone application rates shown in this table are in addition to the standard rate of 4000 lbs. / acre required for seeding and mulching.

No direct payment will be made for providing additional lime or acidic amendments for Ph adjustment.

GROUT PRODUCTION AND DELIVERY:

(3-17-15) 1003 SP10 R20

Revise the *2012 Standard Specifications* as follows:

Replace Section 1003 with the following:

SECTION 1003
GROUT PRODUCTION AND DELIVERY

1003-1 DESCRIPTION

This section addresses cement grout to be used for structures, foundations, retaining walls, concrete barriers, embankments, pavements and other applications in accordance with the contract. Produce non-metallic grout composed of Portland cement and water and at the Contractor's option or as required, aggregate and pozzolans. Include chemical admixtures as required or needed. Provide sand cement or neat cement grout as required. Define "sand cement grout" as grout with only fine aggregate and "neat cement grout" as grout without aggregate.

The types of grout with their typical uses are as shown below:

Type 1 – A cement grout with only a 3-day strength requirement and a fluid consistency that is typically used for filling subsurface voids.

Type 2 – A nonshrink grout with strength, height change and flow conforming to ASTM C1107 that is typically used for foundations, ground anchors and soil nails.

Type 3 – A nonshrink grout with high early strength and freeze-thaw durability requirements that is typically used in pile blockouts, grout pockets, shear keys, dowel holes and recesses for concrete barriers and structures.

Type 4 – A neat cement grout with low strength, a fluid consistency and high fly ash content that is typically used for slab jacking.

Type 5 – A low slump, low mobility sand cement grout with minimal strength that is typically used for compaction grouting.

1003-2 MATERIALS

Refer to Division 10.

Item	**Section**
Chemical Admixtures	1024-3
Fine Aggregate	1014-1
Fly Ash	1024-5
Ground Granulated Blast Furnace Slag	1024-6
Portland Cement	1024-1
Silica Fume	1024-7
Water	1024-4

Do not use grout that contains soluble chlorides or more than 1% soluble sulfate. At the Contractor's option, use an approved packaged grout instead of the materials above except for water. Use packaged grouts that are on the NCDOT Approved Products List.

Use admixtures for grout that are on the NCDOT Approved Products List or other admixtures in accordance with Subarticle 1024-3(E) except do not use concrete additives or unclassified or other admixtures in Type 4 or 5 grout. Use Class F fly ash for Type 4 grout and Type II Portland cement for Type 5 grout.

Use well graded rounded aggregate with a gradation, liquid limit (LL) and plasticity index (PI) that meet Table 1003-1 for Type 5 grout. Fly ash may be substituted for a portion of the fines in the aggregate. Do not use any other pozzolans in Type 5 grout.

TABLE 1003-1
AGGREGATE REQUIREMENTS FOR TYPE 5 GROUT

Gradation		**Maximum Liquid Limit**	**Maximum Plasticity Index**
Sieve Designation per AASHTO M 92	**Percentage Passing (% by weight)**		
3/8"	100	N/A	N/A
No. 4	70 – 95		
No. 8	50 – 90		
No. 16	30 – 80		
No. 30	25 – 70		
No. 50	20 – 50		
No. 100	15 – 40		
No. 200	10 – 30	25	10

1003-3 COMPOSITION AND DESIGN

When using an approved packaged grout, a grout mix design submittal is not required. Otherwise, submit proposed grout mix designs for each grout mix to be used in the work. Mixes for all grout shall be designed by a Certified Concrete Mix Design Technician or an Engineer licensed by the State of North Carolina. Mix proportions shall be determined by a testing laboratory approved by the Department. Base grout mix designs on laboratory trial batches that meet Table 1003-2 and this section. With permission, the

Contractor may use a quantity of chemical admixture within the range shown on the current list of approved admixtures maintained by the Materials and Tests Unit.

Submit grout mix designs in terms of saturated surface dry weights on Materials and Tests Form 312U at least 35 days before proposed use. Adjust batch proportions to compensate for surface moisture contained in the aggregates at the time of batching. Changes in the saturated surface dry mix proportions will not be permitted unless revised grout mix designs have been submitted to the Engineer and approved.

Accompany Materials and Tests Form 312U with a listing of laboratory test results of compressive strength, density and flow or slump and if applicable, aggregate gradation, durability and height change. List the compressive strength of at least three 2" cubes at the age of 3 and 28 days.

The Engineer will review the grout mix design for compliance with the contract and notify the Contractor as to its acceptability. Do not use a grout mix until written notice has been received. Acceptance of the grout mix design or use of approved packaged grouts does not relieve the Contractor of his responsibility to furnish a product that meets the contract. Upon written request from the Contractor, a grout mix design accepted and used satisfactorily on any Department project may be accepted for use on other projects.

Perform laboratory tests in accordance with the following test procedures:

Property	**Test Method**
Aggregate Gradation[A]	AASHTO T 27
Compressive Strength	AASHTO T 106
Density (Unit Weight)	AASHTO T 121, AASHTO T 133[B], ANSI/API RP[C] 13B-1[B] (Section 4, Mud Balance)
Durability	AASHTO T 161[D]
Flow	ASTM C939 (Flow Cone)
Height Change	ASTM C1090[E]
Slump	AASHTO T 119

A. Applicable to grout with aggregate.
B. Applicable to Neat Cement Grout.
C. American National Standards Institute/American Petroleum Institute Recommended Practice.
D. Procedure A (Rapid Freezing and Thawing in Water) required.
E. Moist room storage required.

1003-4 GROUT REQUIREMENTS

Provide grout types in accordance with the contract. Use grouts with properties that meet Table 1003-2. The compressive strength of the grout will be considered the average compressive strength test results of three 2" cubes at each age. Make cubes that meet AASHTO T 106 from the grout delivered for the work or mixed on-site. Make cubes at

such frequencies as the Engineer may determine and cure them in accordance with AASHTO T 106.

TABLE 1003-2
GROUT REQUIREMENTS

Type of Grout	Minimum Compressive Strength at		Height Change at 28 days	Flow[A]/Slump[B]	Minimum Durability Factor
	3 days	28 days			
1	3,000 psi	–	–	10 – 30 sec	–
2	Table 1[C]			Fluid Consistency[C]	–
3	5,000 psi	–	0 – 0.2%	Per Accepted Grout Mix Design/ Approved Packaged Grout	80
4[D]	600 psi	1,500 psi	–	10 – 26 sec	–
5	–	500 psi	–	1 – 3"	–

A. Applicable to Type 1 through 4 grouts.
B. Applicable to Type 5 grout.
C. ASTM C1107.
D. Use Type 4 grout with proportions by volume of 1 part cement and 3 parts fly ash.

1003-5 TEMPERATURE REQUIREMENTS

When using an approved packaged grout, follow the manufacturer's instructions for grout and air temperature at the time of placement. Otherwise, the grout temperature at the time of placement shall be not less than 50°F nor more than 90°F. Do not place grout when the air temperature measured at the location of the grouting operation in the shade away from artificial heat is below 40°F.

1003-6 ELAPSED TIME FOR PLACING GROUT

Agitate grout continuously before placement. Regulate the delivery so the maximum interval between the placing of batches at the work site does not exceed 20 minutes. Place grout before exceeding the times in Table 1003-3. Measure the elapsed time as the time between adding the mixing water to the grout mix and placing the grout.

TABLE 1003-3 ELAPSED TIME FOR PLACING GROUT (with continuous agitation)		
Air or Grout Temperature, Whichever is Higher	**Maximum Elapsed Time**	
	No Retarding Admixture Used	**Retarding Admixture Used**
90°F or above	30 minutes	1 hr. 15 minutes
80°F through 89°F	45 minutes	1 hr. 30 minutes
79°F or below	60 minutes	1 hr. 45 minutes

1003-7 MIXING AND DELIVERY

Use grout free of any lumps and undispersed cement. When using an approved packaged grout, mix grout in accordance with the manufacturer's instructions. Otherwise, comply with Articles 1000-8 through 1000-12 to the extent applicable for grout instead of concrete.

TEMPORARY SHORING:

(2-20-07) (Rev. 3-17-15) SP11 R02

Description

Temporary shoring includes cantilever, braced and anchored shoring and temporary mechanically stabilized earth (MSE) walls. Temporary shoring does not include trench boxes. At the Contractor's option, use any type of temporary shoring unless noted otherwise in the plans or as directed. Design and construct temporary shoring based on actual elevations and shoring dimensions in accordance with the contract and accepted submittals. Construct temporary shoring at locations shown in the plans and as directed. Temporary shoring is required to maintain traffic when a 2:1 (H:V) slope from the top of an embankment or bottom of an excavation will intersect the existing ground line less than 5 ft from the edge of pavement of an open travelway. This provision does not apply to pipe, inlet or utility installation unless noted otherwise in the plans.

Positive protection includes concrete barrier and temporary guardrail. Provide positive protection for temporary shoring at locations shown in the plans and as directed. Positive protection is required if temporary shoring is located in the clear zone in accordance with the *AASHTO Roadside Design Guide*.

(A) Cantilever and Braced Shoring

Cantilever shoring consists of steel sheet piles or H-piles with timber lagging. Braced shoring consists of sheet piles or H-piles with timber lagging and bracing such as beams, plates, walers, struts, rakers, etc. Define "piles" as sheet piles or H-piles.

(B) Anchored Shoring

Anchored shoring consists of sheet piles with walers or H-piles with timber lagging anchored with ground or helical anchors. Driven anchors may be accepted at the discretion of the Engineer. A ground anchor consists of a grouted steel bar or multi-strand tendon with an anchorage. A helical anchor consists of a lead section with a central steel shaft and at least one helix steel plate followed by extensions with only central shafts (no helixes) and an anchorage. Anchorages consist of steel bearing plates with washers and hex nuts for bars or steel wedge plates and wedges for strands. Use a prequalified Anchored Wall Contractor to install ground anchors. Define "anchors" as ground, helical or driven anchors.

(C) Temporary MSE Walls

Temporary MSE walls include temporary geosynthetic and wire walls. Define "temporary wall" as a temporary MSE wall. Define "reinforcement" as geotextile, geogrid, welded wire grid or metallic strip reinforcement.

Temporary geosynthetic walls consist of geotextile or geogrid reinforcement wrapped behind welded wire facing. Define "temporary geotextile wall" as a temporary geosynthetic wall with geotextile reinforcement and "temporary geogrid wall" as a temporary geosynthetic wall with geogrid reinforcement.

Temporary wire walls consist of welded wire grid or metallic strip reinforcement connected to welded wire facing. Define "Wire Wall Vendor" as the vendor supplying the temporary wire wall.

(D) Embedment

Define "embedment" for cantilever, braced and anchored shoring as the pile depth below the grade in front of shoring. Define "embedment" for temporary walls as the wall height below the grade in front of walls.

(E) Positive Protection

Define "unanchored or anchored portable concrete barrier" as portable concrete barrier (PCB) that meets Standard Drawing No. 1170.01 of the *2012 Roadway Standard Drawings*. Define "concrete barrier" as unanchored or anchored PCB or an approved equal. Define "temporary guardrail" as temporary steel beam guardrail that meets Standard Drawing No. 862.02 of the *2012 Roadway Standard Drawings*.

Materials

Refer to the *2012 Standard Specifications*.

Item	**Section**
Anchor Pins	1056-2
Concrete Barrier Materials	1170-2
Flowable Fill, Excavatable	1000-6
Geotextiles	1056
Grout	1003
Portland Cement Concrete	1000
Select Material	1016
Steel Beam Guardrail Materials	862-2
Steel Plates	1072-2
Steel Sheet Piles and H-Piles	1084
Untreated Timber	1082-2
Welded Wire Reinforcement	1070-3
Wire Staples	1060-8(D)

Provide Type 6 material certifications for shoring materials in accordance with Article 106-3 of the *2012 Standard Specifications*. Use Class IV select material (standard size No. ABC) for temporary guardrail. Use neat cement grout for Type 2 grout for ground anchors. Use Class A concrete that meets Article 450-2 of the *2012 Standard Specifications* or Type 1 grout for drilled-in piles. Provide untreated timber with a thickness of at least 3" and a bending stress of at least 1,000 psi for timber lagging. Provide steel bracing that meets ASTM A36.

(A) Shoring Backfill

Use Class II, Type 1, Class III, Class V or Class VI select material or material that meets AASHTO M 145 for soil classification A-2-4 with a maximum PI of 6 for shoring backfill except do not use A-2-4 soil for backfill around culverts.

(B) Anchors

Store anchor materials on blocking a minimum of 12" above the ground and protect it at all times from damage; and when placing in the work make sure it is free from dirt, dust, loose mill scale, loose rust, paint, oil or other foreign materials. Load, transport, unload and store anchor materials so materials are kept clean and free of damage. Bent, damaged or defective materials will be rejected.

(1) Ground Anchors

Use high-strength deformed steel bars that meet AASHTO M 275 or seven-wire strands that meet ASTM A886 or Article 1070-5 of the *2012 Standard Specifications*. Splice bars in accordance with Article 1070-9 of the *2012 Standard Specifications*. Do not splice strands. Use bondbreakers, spacers

and centralizers that meet Article 6.3.5 of the *AASHTO LRFD Bridge Construction Specifications*.

(2) Helical Anchors

Use helical anchors with an ICC Evaluation Service, Inc. (ICC-ES) report. Helical anchors without an ICC-ES report may be approved at the discretion of the Engineer. Provide couplers, thread bar adapters and bolts recommended by the Anchor Manufacturer to connect helical anchors together and to piles.

(3) Anchorages

Provide steel plates for bearing plates and steel washers, hex nuts, wedge plates and wedges recommended by the Anchor Manufacturer.

(C) Temporary Walls

(1) Welded Wire Facing

Use welded wire reinforcement for welded wire facing, struts and wires. For temporary wire walls, provide welded wire facing supplied by the Wire Wall Vendor or a manufacturer approved or licensed by the vendor. For temporary wire walls with separate reinforcement and facing components, provide connectors (e.g., bars, clamps, plates, etc.) and fasteners (e.g., bolts, nuts, washers, etc.) required by the Wire Wall Vendor.

(2) Geotextiles

Provide Type 2 geotextile for separation and retention geotextiles. Provide Type 5 geotextile for geotextile reinforcement with ultimate tensile strengths in accordance with the accepted submittals.

(3) Geogrid Reinforcement

Handle and store geogrids in accordance with Article 1056-2 of the *2012 Standard Specifications*. Define "machine direction" (MD) and "cross-machine direction" (CD) for geogrids in accordance with ASTM D4439.

Use geogrids with a roll width of at least 4 ft and an "approved" or "approved for provisional use" status code. The list of approved geogrids is available from: connect.ncdot.gov/resources/Materials/Pages/SoilsLaboratory.aspx

Provide geogrids for geogrid reinforcement with design strengths in accordance with the accepted submittals. Geogrids are typically approved for ultimate tensile strengths in the MD and CD or short-term design strengths for a 3-year design life in the MD based on material type. Define material type from the website above for shoring backfill as follows:

Material Type	Shoring Backfill
Borrow	A-2-4 Soil
Fine Aggregate	Class II, Type 1 or Class III Select Material
Coarse Aggregate	Class V or VI Select Material

(4) Welded Wire Grid and Metallic Strip Reinforcement

Provide welded wire grid and metallic strip reinforcement supplied by the Wire Wall Vendor or a manufacturer approved or licensed by the vendor. Use welded wire grid reinforcement ("mesh", "mats" and "ladders") that meet Article 1070-3 of the *2012 Standard Specifications* and metallic strip reinforcement ("straps") that meet ASTM A572 or A1011.

Preconstruction Requirements

(A) Concrete Barrier

Define "clear distance" behind concrete barrier as the horizontal distance between the barrier and edge of pavement. The minimum required clear distance for concrete barrier is shown in the plans. At the Contractor's option or if the minimum required clear distance is not available, set concrete barrier next to and up against traffic side of temporary shoring except for barrier above temporary walls. Concrete barrier with the minimum required clear distance is required above temporary walls.

(B) Temporary Guardrail

Define "clear distance" behind temporary guardrail as the horizontal distance between guardrail posts and temporary shoring. At the Contractor's option or if clear distance for cantilever, braced and anchored shoring is less than 4 ft, attach guardrail to traffic side of shoring as shown in the plans. Place ABC in clear distance and around guardrail posts instead of pavement. Do not use temporary guardrail above temporary walls.

(C) Temporary Shoring Designs

Before beginning temporary shoring design, survey existing ground elevations in the vicinity of shoring locations to determine actual design heights (H). Submit 8 copies of working drawings and 3 copies of design calculations and a PDF copy of each for temporary shoring designs in accordance with Article 105-2 of the *2012 Standard Specifications*. Submit working drawings showing plan views, shoring profiles, typical

sections and details of temporary shoring design and construction sequence. Do not begin shoring construction until a design submittal is accepted.

Have cantilever and braced shoring designed, detailed and sealed by an engineer licensed in the state of North Carolina. Use a prequalified Anchored Wall Design Consultant to design anchored shoring. Provide anchored shoring designs sealed by a Design Engineer approved as a Geotechnical Engineer (key person) for an Anchored Wall Design Consultant. Include details in anchored shoring working drawings of anchor locations and lock-off loads, unit grout/ground bond strengths for ground anchors or minimum installation torque and torsional strength rating for helical anchors and if necessary, obstructions extending through shoring or interfering with anchors. Include details in the anchored shoring construction sequence of pile and anchor installation, excavation and anchor testing.

Use a prequalified MSE Wall Design Consultant to design temporary walls. Provide temporary wall designs sealed by a Design Engineer approved as a Geotechnical Engineer (key person) for the MSE Wall Design Consultant. Include details in temporary wall working drawings of geotextile and reinforcement types, locations and directions and obstructions extending through walls or interfering with reinforcement.

(1) Soil Parameters

Design temporary shoring for the assumed soil parameters and groundwater elevations shown in the plans. Assume the following soil parameters for shoring backfill:

(a) Unit weight (γ) = 120 lb/cf;

(b)

Friction Angle (ϕ)	**Shoring Backfill**
30°	A-2-4 Soil
34°	Class II, Type 1 or Class III Select Material
38°	Class V or VI Select Material

(c) Cohesion (c) = 0 lb/sf.

(2) Traffic Surcharge

Design temporary shoring for a traffic surcharge of 250 lb/sf if traffic will be above and within H of shoring. This traffic surcharge does not apply to construction traffic. Design temporary shoring for any construction surcharge if construction traffic will be above and within H of shoring. For LRFD shoring designs, apply traffic (live load) surcharge in accordance with Figure C11.5.5-3 of the *AASHTO LRFD Bridge Design Specifications*.

(3) Cantilever, Braced and Anchored Shoring Designs

Use shoring backfill for fill sections and voids between cantilever, braced and anchored shoring and the critical failure surface. Use concrete or grout for embedded portions of drilled-in H-piles. Do not use drilled-in sheet piles.

Define “top of shoring” for cantilever, braced and anchored shoring as where the grade intersects the back of sheet piles or H-piles and timber lagging. Design cantilever, braced and anchored shoring for a traffic impact load of 2,000 lb/ft applied 18" above top of shoring if concrete barrier is above and next to shoring or temporary guardrail is above and attached to shoring. For anchored shoring designs, apply traffic impact load as horizontal load (P_{H1}) in accordance with Figure 3.11.6.3-2(a) of the AASHTO LRFD specifications.

Extend cantilever, braced and anchored shoring at least 32" above top of shoring if shoring is designed for traffic impact. Otherwise, extend shoring at least 6" above top of shoring.

Design cantilever, braced and anchored shoring for a maximum deflection of 3" if the horizontal distance to the closest edge of pavement or structure is less than H. Otherwise, design shoring for a maximum deflection of 6". Design cantilever and braced shoring in accordance with the plans and *AASHTO Guide Design Specifications for Bridge Temporary Works*.

Design anchored shoring in accordance with the plans and Article 11.9 of the *AASHTO LRFD Bridge Design Specifications*. Use a resistance factor of 0.80 for tensile resistance of anchors with bars, strands or shafts. Extend the unbonded length for ground anchors and the shallowest helix for helical anchors at least 5 ft behind the critical failure surface. Do not extend anchors beyond right-of-way or easement limits. If existing or future obstructions such as foundations, guardrail posts, pavements, pipes, inlets or utilities will interfere with anchors, maintain a clearance of at least 6" between obstructions and anchors.

(4) Temporary Wall Designs

Use shoring backfill in the reinforced zone of temporary walls. Separation geotextiles are required between shoring backfill and backfill, natural ground or culverts along the sides of the reinforced zone perpendicular to the wall face. For Class V or VI select material in the reinforced zone, separation geotextiles are also required between shoring backfill and backfill or natural ground on top of and at the back of the reinforced zone.

Design temporary walls in accordance with the plans and Article 11.10 of the *AASHTO LRFD Bridge Design Specifications*. Embed temporary walls at least 18" except for walls on structures or rock as determined by the Engineer. Use a uniform reinforcement length throughout the wall height of at least 0.7H or 6 ft,

whichever is longer. Extend the reinforced zone at least 6" beyond end of reinforcement. Do not locate the reinforced zone outside right-of-way or easement limits.

Use the simplified method for determining maximum reinforcement loads in accordance with the AASHTO LRFD specifications. For geotextile reinforcement, use geotextile properties approved by the Department or default values in accordance with the AASHTO LRFD specifications. For geogrid reinforcement, use approved geogrid properties available from the website shown elsewhere in this provision. If the website does not list a short-term design strength for an approved geogrid, use a short-term design strength equal to the ultimate tensile strength divided by 3.5 for the geogrid reinforcement. Use geosynthetic properties for the direction reinforcement will be installed, a 3-year design life and shoring backfill to be used in the reinforced zone.

Do not use more than 4 different reinforcement strengths for each temporary geosynthetic wall. Design temporary geotextile walls for a reinforcement coverage ratio (R_c) of 1.0 and temporary geogrid walls for an R_c of at least 0.8. For geogrid reinforcement with an R_c of less than 1.0, use a maximum horizontal clearance between geogrids of 3 ft and stagger reinforcement so geogrids are centered over gaps in the reinforcement layer below.

For temporary geosynthetic walls, use “L” shaped welded wire facing with 18" to 24" long legs. Locate geotextile or geogrid reinforcement so reinforcement layers are at the same level as the horizontal legs of welded wire facing. Use vertical reinforcement spacing equal to facing height. Wrap geotextile or geogrid reinforcement behind welded wire facing and extend reinforcement at least 3 ft back behind facing into shoring backfill.

For temporary wire walls with separate reinforcement and facing components, attach welded wire grid or metallic strip reinforcement to welded wire facing with a connection approved by the Department. For temporary geogrid and wire walls, retain shoring backfill at welded wire facing with retention geotextiles and extend geotextiles at least 3 ft back behind facing into backfill.

(D) Preconstruction Meeting

The Engineer may require a shoring preconstruction meeting to discuss the construction, inspection and testing of the temporary shoring. If required and if this meeting occurs before all shoring submittals have been accepted, additional preconstruction meetings may be required before beginning construction of temporary shoring without accepted submittals. The Resident, District or Bridge Maintenance Engineer, Bridge or Roadway Construction Engineer, Geotechnical Operations Engineer, Contractor and Shoring Contractor Superintendent will attend preconstruction meetings.

Construction Methods

Control drainage during construction in the vicinity of shoring. Direct run off away from shoring and shoring backfill. Contain and maintain backfill and protect material from erosion.

Install positive protection in accordance with the contract and accepted submittals. Use PCB in accordance with Section 1170 of the *2012 Standard Specifications* and Standard Drawing No. 1170.01 of the *2012 Roadway Standard Drawings*. Use temporary guardrail in accordance with Section 862 of the *2012 Standard Specifications* and Standard Drawing No. 862.01, 862.02 and 862.03 of the *2012 Roadway Standard Drawings*.

(A) Tolerances

Construct shoring with the following tolerances:

(1) Horizontal wires of welded wire facing are level in all directions,

(2) Shoring location is within 6" of horizontal and vertical alignment shown in the accepted submittals, and

(3) Shoring plumbness (batter) is not negative and within 2° of vertical.

(B) Cantilever, Braced and Anchored Shoring Installation

If overexcavation behind cantilever, braced or anchored shoring is shown in the accepted submittals, excavate before installing piles. Otherwise, install piles before excavating for shoring. Install cantilever, braced or anchored shoring in accordance with the construction sequence shown in the accepted submittals. Remove piles and if applicable, timber lagging when shoring is no longer needed.

(1) Pile Installation

Install piles with the minimum required embedment and extension in accordance with Subarticles 450-3(D) and 450-3(E) of the *2012 Standard Specifications* except that a pile driving equipment data form is not required. Piles may be installed with a vibratory hammer as approved by the Engineer.

Do not splice sheet piles. Use pile excavation to install drilled-in H-piles. After filling holes with concrete or grout to the elevations shown in the accepted submittals, remove any fluids and fill remaining portions of holes with flowable fill. Cure concrete or grout at least 7 days before excavating.

Notify the Engineer if refusal is reached before pile excavation or driven piles attain the minimum required embedment. When this occurs, a revised design submittal may be required.

(2) Excavation

Excavate in front of piles from the top down in accordance with the accepted submittals. For H-piles with timber lagging and braced and anchored shoring, excavate in staged horizontal lifts with a maximum height of 5 ft. Remove flowable fill and material in between H-piles as needed to install timber lagging. Position lagging with at least 3" of contact in the horizontal direction between the lagging and pile flanges. Do not excavate the next lift until timber lagging for the current lift is installed and if applicable, bracing and anchors for the current lift are accepted. Backfill behind cantilever, braced or anchored shoring with shoring backfill.

(3) Anchor Installation

If applicable, install foundations located behind anchored shoring before installing anchors. Fabricate and install ground anchors in accordance with the accepted submittals, Articles 6.4 and 6.5 of the *AASHTO LRFD Bridge Construction Specifications* and the following unless otherwise approved:

(a) Materials in accordance with this provision are required instead of materials conforming to Articles 6.4 and 6.5.3 of the AASHTO LRFD Specifications,

(b) Encapsulation-protected ground anchors in accordance with Article 6.4.1.2 of the AASHTO LRFD specifications are not required, and

(c) Corrosion protection for unbonded lengths of ground anchors and anchorage covers are not required.

(d) Measure grout temperature, density and flow during grouting with at least the same frequency grout cubes are made for compressive strength. Perform density and flow field tests in the presence of the Engineer in accordance with American National Standards Institute/American Petroleum Institute Recommended Practice 13B-1 (Section 4, Mud Balance) and ASTM C939 (Flow Cone), respectively.

Install helical anchors in accordance with the accepted submittals and Anchor Manufacturer’s instructions. Measure torque during installation and do not exceed the torsional strength rating of the helical anchor. Attain the minimum required installation torque and penetration before terminating anchor installation. When replacing a helical anchor, embed last helix of the replacement anchor at least 3 helix plate diameters past the location of the first helix of the previous anchor.

(4) Anchor Testing

Proof test and lock-off anchors in accordance with the accepted submittals and Article 6.5.5 of the *AASHTO LRFD Bridge Construction Specifications* except for the acceptance criteria in Article 6.5.5.5. For the AASHTO LRFD specifications, “ground anchor” refers to a ground or helical anchor and “tendon” refers to a bar, strand or shaft.

(a) Anchor Acceptance

Anchor acceptance is based in part on the following criteria.

(i) For ground and helical anchors, total movement is less than 0.04" between the 1 and 10 minute readings or less than 0.08" between the 6 and 60 minute readings.

(ii) For ground anchors, total movement at maximum test load exceeds 80% of the theoretical elastic elongation of the unbonded length.

(b) Anchor Test Results

Submit 2 copies of anchor test records including movement versus load plots for each load increment within 24 hours of completing each row of anchors. The Engineer will review the test records to determine if the anchors are acceptable.

If the Engineer determines an anchor is unacceptable, revise the anchor design or installation methods. Submit a revised anchored shoring design for acceptance and provide an acceptable anchor with the revised design or installation methods. If required, replace the anchor or provide additional anchors with the revised design or installation methods.

(C) Temporary Wall Installation

Excavate as necessary for temporary walls in accordance with the plans and accepted submittals. If applicable, install foundations located in the reinforced zone before placing shoring backfill or reinforcement unless otherwise approved. Notify the Engineer when foundation excavation is complete. Do not place shoring backfill or reinforcement until excavation dimensions and foundation material are approved.

Erect welded wire facing so the wall position is as shown in the plans and accepted submittals. Set welded wire facing adjacent to each other in the horizontal and vertical direction to completely cover the wall face with facing. Stagger welded wire facing to create a running bond by centering facing over joints in the row below.

Wrap geotextile reinforcement and retention geotextiles behind welded wire facing as shown in the plans and accepted submittals and cover geotextiles with at least 3" of

shoring backfill. Overlap adjacent geotextile reinforcement and retention and separation geotextiles at least 18" with seams oriented perpendicular to the wall face. Hold geotextiles in place with wire staples or anchor pins as needed.

Place reinforcement within 3" of locations shown in the plans and accepted submittals and in slight tension free of kinks, folds, wrinkles or creases. Install reinforcement with the direction shown in the plans and accepted submittals. For temporary wire walls with separate reinforcement and facing components, attach welded wire grid or metallic strip reinforcement to welded wire facing as shown in the accepted submittals. Do not splice or overlap reinforcement so seams are parallel to the wall face. Contact the Engineer when unanticipated existing or future obstructions such as foundations, pavements, pipes, inlets or utilities will interfere with reinforcement.

Place shoring backfill in the reinforced zone in 8" to 10" thick lifts. Compact A-2-4 soil and Class II, Type 1 and Class III select material in accordance with Subarticle 235-3(C) of the *2012 Standard Specifications*. Use only hand operated compaction equipment to compact backfill within 3 ft of welded wire facing. At a distance greater than 3 ft, compact shoring backfill with at least 4 passes of an 8 ton to 10 ton vibratory roller in a direction parallel to the wall face. Smooth wheeled or rubber tired rollers are also acceptable for compacting backfill. Do not use sheepsfoot, grid rollers or other types of compaction equipment with feet. Do not displace or damage reinforcement when placing and compacting shoring backfill. End dumping directly on geotextile or geogrid reinforcement is not permitted. Do not operate heavy equipment on reinforcement until it is covered with at least 8" of shoring backfill. Replace any damaged reinforcement to the satisfaction of the Engineer.

Backfill for temporary walls outside the reinforced zone in accordance with Article 410-8 of the *2012 Standard Specifications*. Bench temporary walls into the sides of excavations where applicable. For temporary geosynthetic walls with top of wall within 5 ft of finished grade, remove top facing and incorporate top reinforcement layer into fill when placing fill in front of wall. Temporary walls remain in place permanently unless otherwise required.

Measurement and Payment

Temporary Shoring will be measured and paid in square feet. Temporary walls will be measured as the square feet of exposed wall face area. Cantilever, braced or anchored shoring will be measured as the square feet of exposed shoring face area with the shoring height equal to the difference between the top and bottom of shoring elevations. Define “top of shoring” as where the grade intersects the back of sheet piles or H-piles and timber lagging. Define “bottom of shoring” as where the grade intersects front of sheet piles or H-piles and timber lagging. No measurement will be made for any embedment, shoring extension above top of shoring or pavement thickness above temporary walls.

The contract unit price for *Temporary Shoring* will be full compensation for providing shoring designs, submittals and materials, excavating, backfilling, hauling and removing excavated

materials and supplying all labor, tools, equipment and incidentals necessary to construct temporary shoring.

No payment will be made for temporary shoring not shown in the plans or required by the Engineer including shoring for OSHA reasons or the Contractor's convenience. No value engineering proposals will be accepted based solely on revising or eliminating shoring locations shown in the plans or estimated quantities shown in the bid item sheets as a result of actual field measurements or site conditions.

PCB will be measured and paid in accordance with Section 1170 of the *2012 Standard Specifications*. No additional payment will be made for anchoring PCB for temporary shoring. Costs for anchoring PCB will be incidental to temporary shoring.

Temporary guardrail will be measured and paid for in accordance with Section 862 of the *2012 Standard Specifications*.

Payment will be made under:

Pay Item	**Pay Unit**
Temporary Shoring	Square Foot

TRUCK MOUNTED CHANGEABLE MESSAGE SIGNS:

(8-21-12) 1101.02 SP11 R10

Revise the *2012 Roadway Standard Drawings* as follows:

Drawing No. 1101.02, Sheet 12, TEMPORARY LANE CLOSURES, replace General Note #11 with the following:

11- TRUCK MOUNTED CHANGEABLE MESSAGE SIGNS (TMCMS) USED ON SHADOW VEHICLES FOR "IN LANE" ACTIVITIES SHALL BE A MINIMUM OF 43" X 73". THE DISPLAY PANEL SHALL HAVE FULL MATRIX CAPABILITY WITH THE CAPABILITY TO PROVIDE 2 MESSAGE LINES WITH 7 CHARACTERS PER LINE WITH A MINIMUM CHARACTER HEIGHT OF 18". FOR ADDITIONAL MESSAGING, CONTACT THE WORK ZONE TRAFFIC CONTROL SECTION.

12- TMCMS USED FOR ADVANCED WARNING ON VEHICLES LOCATED ON THE SHOULDER MAY BE SMALLER THAN 43" X 73". THE DISPLAY PANEL SHALL HAVE THE CAPABILITY TO PROVIDE 2 MESSAGE LINES WITH 7 CHARACTERS PER LINE WITH A MINIMUM CHARACTER HEIGHT OF 18". FOR ADDITIONAL MESSAGING, CONTACT THE WORK ZONE TRAFFIC CONTROL SECTION.

Drawing No. 1101.02, Sheet 13, TEMPORARY LANE CLOSURES, replace General Note #12 with the following:

12- TRUCK MOUNTED CHANGEABLE MESSAGE SIGNS (TMCMS) USED ON SHADOW VEHICLES FOR "IN LANE" ACTIVITIES SHALL BE A MINIMUM OF

43" X 73". THE DISPLAY PANEL SHALL HAVE FULL MATRIX CAPABILITY WITH THE CAPABILITY TO PROVIDE 2 MESSAGE LINES WITH 7 CHARACTERS PER LINE WITH A MINIMUM CHARACTER HEIGHT OF 18". FOR ADDITIONAL MESSAGING, CONTACT THE WORK ZONE TRAFFIC CONTROL SECTION.

13- TMCMS USED FOR ADVANCED WARNING ON VEHICLES LOCATED ON THE SHOULDER MAY BE SMALLER THAN 43" X 73". THE DISPLAY PANEL SHALL HAVE THE CAPABILITY TO PROVIDE 2 MESSAGE LINES WITH 7 CHARACTERS PER LINE WITH A MINIMUM CHARACTER HEIGHT OF 18". FOR ADDITIONAL MESSAGING, CONTACT THE WORK ZONE TRAFFIC CONTROL SECTION.

GROUT REFERENCES FOR POSITIVE PROTECTION:

(5-19-15) 1170 SP11 R20

Revise the *2012 Standard Specifications* as follows:

Page 11-14, Article 1170-2, Materials, line 30, in the materials table, replace “Freeze-Thaw Durable Grout, Nonshrink” with “Grout, Type 3”.

Page 11-14, Article 1170-2, Materials, lines 31-32, delete the first paragraph after the materials table.

GROUT REFERENCES FOR UTILITY MANHOLES:

(8-18-15) 1525 SP15 R40

Revise the *2012 Standard Specifications* as follows:

Page 15-13, Article 1525-2, Materials, line 9, in the materials table, add the following:

Item	**Section**
Grout, Type 2	1003

Page 15-13, Article 1525-2, Materials, lines 20-21, replace the third paragraph after the materials table with the following:

Use Type 2 grout with properties that meet Table 1003-2 in the *Grout Production and Delivery* provision except provide grout with a plastic consistency in accordance with ASTM C1107.

Page 15-14, Subarticle 1525-3(B), Installation of Precast Units, line 22, in the second sentence of the first paragraph, replace “non-shrink grout.” with “grout.”

PERMANENT SEEDING AND MULCHING:

(7-1-95) 1660 SP16 R02

The Department desires that permanent seeding and mulching be established on this project as soon as practical after slopes or portions of slopes have been graded. As an incentive to obtain an early stand of vegetation on this project, the Contractor's attention is called to the following:

For all permanent seeding and mulching that is satisfactorily completed in accordance with the requirements of Section 1660 in the *2012 Standard Specifications* and within the following percentages of elapsed contract times, an additional payment will be made to the Contractor as an incentive additive. The incentive additive will be determined by multiplying the number of acres of seeding and mulching satisfactorily completed times the contract unit bid price per acre for Seeding and Mulching times the appropriate percentage additive.

Percentage of Elapsed Contract Time	Percentage Additive
0% - 30%	30%
30.01% - 50%	15%

Percentage of elapsed contract time is defined as the number of calendar days from the date of availability of the contract to the date the permanent seeding and mulching is acceptably completed divided by the total original contract time.

STANDARD SPECIAL PROVISION
AVAILABILITY OF FUNDS – TERMINATION OF CONTRACTS

(5-20-08) Z-2

General Statute 143C-6-11. (h) Highway Appropriation is hereby incorporated verbatim in this contract as follows:

(h) Amounts Encumbered. – Transportation project appropriations may be encumbered in the amount of allotments made to the Department of Transportation by the Director for the estimated payments for transportation project contract work to be performed in the appropriation fiscal year. The allotments shall be multiyear allotments and shall be based on estimated revenues and shall be subject to the maximum contract authority contained in *General Statute 143C-6-11(c)*. Payment for transportation project work performed pursuant to contract in any fiscal year other than the current fiscal year is subject to appropriations by the General Assembly. Transportation project contracts shall contain a schedule of estimated completion progress, and any acceleration of this progress shall be subject to the approval of the Department of Transportation provided funds are available. The State reserves the right to terminate or suspend any transportation project contract, and any transportation project contract shall be so terminated or suspended if funds will not be available for payment of the work to be performed during that fiscal year pursuant to the contract. In the event of termination of any contract, the contractor shall be given a written notice of termination at least 60 days before completion of scheduled work for which funds are available. In the event of termination, the contractor shall be paid for the work already performed in accordance with the contract specifications.

Payment will be made on any contract terminated pursuant to the special provision in accordance with Subarticle 108-13(E) of the *2012 Standard Specifications*.

STANDARD SPECIAL PROVISION
NCDOT GENERAL SEED SPECIFICATION FOR SEED QUALITY

(5-17-11) Z-3

Seed shall be sampled and tested by the North Carolina Department of Agriculture and Consumer Services, Seed Testing Laboratory. When said samples are collected, the vendor shall supply an independent laboratory report for each lot to be tested. Results from seed so sampled shall be final. Seed not meeting the specifications shall be rejected by the Department of Transportation and shall not be delivered to North Carolina Department of Transportation warehouses. If seed has been delivered it shall be available for pickup and replacement at the supplier's expense.

Any re-labeling required by the North Carolina Department of Agriculture and Consumer Services, Seed Testing Laboratory, that would cause the label to reflect as otherwise specified herein shall be rejected by the North Carolina Department of Transportation.

Seed shall be free from seeds of the noxious weeds Johnsongrass, Balloonvine, Jimsonweed, Witchweed, Itchgrass, Serrated Tussock, Showy Crotalaria, Smooth Crotalaria, Sicklepod, Sandbur, Wild Onion, and Wild Garlic. Seed shall not be labeled with the above weed species on the seed analysis label. Tolerances as applied by the Association of Official Seed Analysts will NOT be allowed for the above noxious weeds except for Wild Onion and Wild Garlic.

Tolerances established by the Association of Official Seed Analysts will generally be recognized. However, for the purpose of figuring pure live seed, the found pure seed and found germination percentages as reported by the North Carolina Department of Agriculture and Consumer Services, Seed Testing Laboratory will be used. Allowances, as established by the NCDOT, will be recognized for minimum pure live seed as listed on the following pages.

The specifications for restricted noxious weed seed refers to the number per pound as follows:

Restricted Noxious **Weed**	Limitations per Lb. Of Seed	Restricted Noxious **Weed**	Limitations per Lb. of Seed
Blessed Thistle	4 seeds	Cornflower (Ragged Robin)	27 seeds
Cocklebur	4 seeds	Texas Panicum	27 seeds
Spurred Anoda	4 seeds	Bracted Plantain	54 seeds
Velvetleaf	4 seeds	Buckhorn Plantain	54 seeds
Morning-glory	8 seeds	Broadleaf Dock	54 seeds
Corn Cockle	10 seeds	Curly Dock	54 seeds
Wild Radish	12 seeds	Dodder	54 seeds
Purple Nutsedge	27 seeds	Giant Foxtail	54 seeds
Yellow Nutsedge	27 seeds	Horsenettle	54 seeds
Canada Thistle	27 seeds	Quackgrass	54 seeds
Field Bindweed	27 seeds	Wild Mustard	54 seeds
Hedge Bindweed	27 seeds		

Seed of Pensacola Bahiagrass shall not contain more than 7% inert matter, Kentucky Bluegrass, Centipede and Fine or Hard Fescue shall not contain more than 5% inert matter whereas a maximum of 2% inert matter will be allowed on all other kinds of seed. In addition, all seed shall not contain more than 2% other crop seed nor more than 1% total weed seed. The germination rate as tested by the North Carolina Department of Agriculture shall not fall below 70%, which includes both dormant and hard seed. Seed shall be labeled with not more than 7%, 5% or 2% inert matter (according to above specifications), 2% other crop seed and 1% total weed seed.

Exceptions may be made for minimum pure live seed allowances when cases of seed variety shortages are verified. Pure live seed percentages will be applied in a verified shortage situation. Those purchase orders of deficient seed lots will be credited with the percentage that the seed is deficient.

FURTHER SPECIFICATIONS FOR EACH SEED GROUP ARE GIVEN BELOW:

Minimum 85% pure live seed; maximum 1% total weed seed; maximum 2% total other crop seed; maximum 144 restricted noxious weed seed per pound. Seed less than 83% pure live seed will not be approved.

Sericea Lespedeza
Oats (seeds)

Minimum 80% pure live seed; maximum 1% total weed seed; maximum 2% total other crop; maximum 144 restricted noxious weed seed per pound. Seed less than 78% pure live seed will not be approved.

Tall Fescue (all approved varieties)
Kobe Lespedeza
Korean Lespedeza
Weeping Lovegrass
Carpetgrass
Bermudagrass
Browntop Millet
German Millet – Strain R
Clover – Red/White/Crimson

Minimum 78% pure live seed; maximum 1% total weed seed; maximum 2% total other crop seed; maximum 144 restricted noxious weed seed per pound. Seed less than 76% pure live seed will not be approved.

Common or Sweet Sundangrass

Minimum 76% pure live seed; maximum 1% total weed seed; maximum 2% total other crop seed; maximum 144 restricted noxious weed seed per pound. Seed less than 74% pure live seed will not be approved.

Rye (grain; all varieties)
Kentucky Bluegrass (all approved varieties)
Hard Fescue (all approved varieties)
Shrub (bicolor) Lespedeza

Minimum 70% pure live seed; maximum 1% total weed seed; maximum 2% total other crop seed; maximum 144 noxious weed seed per pound. Seed less than 70% pure live seed will not be approved.

Centipedegrass
Crownvetch
Pensacola Bahiagrass
Creeping Red Fescue
Japanese Millet
Reed Canary Grass
Zoysia

Minimum 70% pure live seed; maximum 1% total weed seed; maximum 2% total other crop seed; maximum 5% inert matter; maximum 144 restricted noxious weed seed per pound.

Barnyard Grass
Big Bluestem
Little Bluestem
Bristly Locust
Birdsfoot Trefoil
Indiangrass
Orchardgrass
Switchgrass
Yellow Blossom Sweet Clover

STANDARD SPECIAL PROVISION

ERRATA

(1-17-12) (Rev. 04-21-15) Z-4

Revise the *2012 Standard Specifications* as follows:

Division 2

Page 2-7, line 31, Article 215-2 Construction Methods, replace "Article 107-26" with "Article 107-25".

Page 2-17, Article 226-3, Measurement and Payment, line 2, delete "pipe culverts,".

Page 2-20, Subarticle 230-4(B), Contractor Furnished Sources, change references as follows: Line 1, replace "(4) Buffer Zone" with "(c) Buffer Zone"; **Line 12,** replace "(5) Evaluation for Potential Wetlands and Endangered Species" with "(d) Evaluation for Potential Wetlands and Endangered Species"; and **Line 33,** replace "(6) Approval" with "(4) Approval".

Division 3

Page 3-1, after line 15, Article 300-2 Materials, replace "1032-9(F)" with "1032-6(F)".

Division 4

Page 4-77, line 27, Subarticle 452-3(C) Concrete Coping, replace "sheet pile" with "reinforcement".

Division 6

Page 6-7, line 31, Article 609-3 Field Verification of Mixture and Job Mix Formula Adjustments, replace "30" with "45".

Page 6-10, line 42, Subarticle 609-6(C)(2), replace "Subarticle 609-6(E)" with "Subarticle 609-6(D)".

Page 6-11, Table 609-1 Control Limits, replace "Max. Spec. Limit" for the Target Source of $P_{0.075}/P_{be}$ Ratio with "1.0".

Page 6-40, Article 650-2 Materials, replace "Subarticle 1012-1(F)" with "Subarticle 1012-1(E)"

Division 7

Page 7-1, Article 700-3, CONCRETE HAULING EQUIPMENT, line 33, replace "competion" with "completion".

Division 8

Page 8-23, line 10, Article 838-2 Materials, replace "Portland Cement Concrete, Class B" with "Portland Cement Concrete, Class A".

Division 10

Page 10-166, Article 1081-3 Hot Bitumen, replace "Table 1081-16" with "Table 1081-2", replace "Table 1081-17" with "Table 1081-3", and replace "Table 1081-18" with "Table 1081-4".

Division 12

Page 12-7, Table 1205-3, add "FOR THERMOPLASTIC" to the end of the title.
Page 12-8, Subarticle 1205-5(B), line 13, replace "Table 1205-2" with "Table 1205-4".
Page 12-8, Table 1205-4 and 1205-5, replace "THERMOPLASTIC" in the title of these tables with "POLYUREA".
Page 12-9, Subarticle 1205-6(B), line 21, replace "Table 1205-4" with "Table 1205-6".
Page 12-11, Subarticle 1205-8(C), line 25, replace "Table 1205-5" with "Table 1205-7".

Division 15

Page 15-4, Subarticle 1505-3(F) Backfilling, line 26, replace "Subarticle 235-4(C)" with "Subarticle 235-3(C)".
Page 15-6, Subarticle 1510-3(B), after line 21, replace the allowable leakage formula with the following: $\mathbf{W=LD\sqrt{P} \div 148{,}000}$
Page 15-6, Subarticle 1510-3(B), line 32, delete "may be performed concurrently or" and replace with "shall be performed".
Page 15-17, Subarticle 1540-3(E), line 27, delete "Type 1".

Division 17

Page 17-26, line 42, Subarticle 1731-3(D) Termination and Splicing within Interconnect Center, delete this subarticle.

Revise the *2012 Roadway Standard Drawings* as follows:

1633.01 Sheet 1 of 1, English Standard Drawing for Matting Installation, replace "1633.01" with "1631.01".

STANDARD SPECIAL PROVISION

PLANT AND PEST QUARANTINES

(Imported Fire Ant, Gypsy Moth, Witchweed, And Other Noxious Weeds)

(3-18-03) (Rev. 10-15-13) Z-04a

Within Quarantined Area

This project may be within a county regulated for plant and/or pests. If the project or any part of the Contractor's operations is located within a quarantined area, thoroughly clean all equipment prior to moving out of the quarantined area. Comply with federal/state regulations by obtaining a certificate or limited permit for any regulated article moving from the quarantined area.

Originating in a Quarantined County

Obtain a certificate or limited permit issued by the N.C. Department of Agriculture/United States Department of Agriculture. Have the certificate or limited permit accompany the article when it arrives at the project site.

Contact

Contact the N.C. Department of Agriculture/United States Department of Agriculture at 1-800-206-9333, 919-733-6932, or *http://www.ncagr.gov/plantind/* to determine those specific project sites located in the quarantined area or for any regulated article used on this project originating in a quarantined county.

Regulated Articles Include

1. Soil, sand, gravel, compost, peat, humus, muck, and decomposed manure, separately or with other articles. This includes movement of articles listed above that may be associated with cut/waste, ditch pulling, and shoulder cutting.
2. Plants with roots including grass sod.
3. Plant crowns and roots.
4. Bulbs, corms, rhizomes, and tubers of ornamental plants.
5. Hay, straw, fodder, and plant litter of any kind.
6. Clearing and grubbing debris.
7. Used agricultural cultivating and harvesting equipment.
8. Used earth-moving equipment.
9. Any other products, articles, or means of conveyance, of any character, if determined by an inspector to present a hazard of spreading imported fire ant, gypsy moth, witchweed or other noxious weeds.

STANDARD SPECIAL PROVISION

AWARD OF CONTRACT

(6-28-77) Z-6

"The North Carolina Department of Transportation, in accordance with the provisions of *Title VI of the Civil Rights Act of 1964* (78 Stat. 252) and the Regulations of the Department of Transportation (*49 C.F.R., Part 21*), issued pursuant to such act, hereby notifies all bidders that it will affirmatively insure that the contract entered into pursuant to this advertisement will be awarded to the lowest responsible bidder without discrimination on the ground of race, color, or national origin".

STANDARD SPECIAL PROVISION

MINORITY AND FEMALE EMPLOYMENT REQUIREMENTS

Z-7

NOTICE OF REQUIREMENTS FOR AFFIRMATIVE ACTION TO ENSURE EQUAL EMPLOYMENT OPPORTUNITY (*EXECUTIVE NUMBER 11246*)

1. The goals and timetables for minority and female participation, expressed in percentage terms for the Contractor's aggregate workforce in each trade on all construction work in the covered area, see as shown on the attached sheet entitled "Employment Goals for Minority and Female participation".

These goals are applicable to all the Contractor's construction work (whether or not it is Federal or federally assisted) performed in the covered area. If the Contractor performs construction work in a geographical area located outside of the covered area, it shall apply the goals established for such geographical area where the work is actually performed. With regard to this second area, the Contractor also is subject to the goals for both its federally involved and nonfederally involved construction.

The Contractor's compliance with the Executive Order and the regulations in *41 CFR Part 60-4* shall be based on its implementation of the Equal Opportunity Clause, specific affirmative action obligations required by the specifications set forth in *41 CFR 60-4.3(a)*, and its effort to meet the goals. The hours of minority and female employment and training must be substantially uniform throughout the length of the contract, and in each trade and the Contractor shall make a good faith effort to employ minorities and women evenly on each of its projects. The transfer of minority or female employees or trainees from Contractor to Contractor or from project to project or the sole purpose of meeting the Contractor's goals shall be a violation of the contract, the executive Order and the regulations *in 41 CFR Part 60-4*. Compliance with the goals will be measured against the total work hours performed.

2. As used in this Notice and in the contract resulting from this solicitation, the "covered area" is the county or counties shown on the cover sheet of the proposal form and contract.

EMPLOYMENT GOALS FOR MINORITY AND FEMALE PARTICIPATION

Economic Areas

Area 023 29.7%
Bertie County
Camden County
Chowan County
Gates County
Hertford County
Pasquotank County
Perquimans County

Area 024 31.7%
Beaufort County
Carteret County
Craven County
Dare County
Edgecombe County
Green County
Halifax County
Hyde County
Jones County
Lenoir County
Martin County
Nash County
Northampton County
Pamlico County
Pitt County
Tyrrell County
Washington County
Wayne County
Wilson County

Area 025 23.5%
Columbus County
Duplin County
Onslow County
Pender County

Area 026 33.5%
Bladen County
Hoke County
Richmond County
Robeson County
Sampson County
Scotland County

Area 027 24.7%
Chatham County
Franklin County
Granville County
Harnett County
Johnston County
Lee County
Person County
Vance County
Warren County

Area 028 15.5%
Alleghany County
Ashe County
Caswell County
Davie County
Montgomery County
Moore County
Rockingham County
Surry County
Watauga County
Wilkes County

Area 029 15.7%
Alexander County
Anson County
Burke County
Cabarrus County
Caldwell County
Catawba County
Cleveland County
Iredell County
Lincoln County
Polk County
Rowan County
Rutherford County
Stanly County

Area 0480 8.5%
Buncombe County
Madison County

Area 030 6.3%
Avery County
Cherokee County
Clay County
Graham County
Haywood County
Henderson County
Jackson County
McDowell County
Macon County
Mitchell County
Swain County
Transylvania County
Yancey County

SMSA Areas

Area 5720 26.6%
Currituck County

Area 9200 20.7%
Brunswick County
New Hanover County

Area 2560 24.2%
Cumberland County

Area 6640 22.8%
Durham County
Orange County
Wake County

Area 1300 16.2%
Alamance County

Area 3120 16.4%
Davidson County
Forsyth County
Guilford County
Randolph County
Stokes County
Yadkin County

Area 1520 18.3%
Gaston County
Mecklenburg County
Union County

Goals for Female

Participation in Each Trade

(Statewide) 6.9%

STANDARD SPECIAL PROVISION

REQUIRED CONTRACT PROVISIONS FEDERAL - AID CONSTRUCTION CONTRACTS

FHWA - 1273 Electronic Version - May 1, 2012 Z-8

I. General
II. Nondiscrimination
III. Nonsegregated Facilities
IV. Davis-Bacon and Related Act Provisions
V. Contract Work Hours and Safety Standards Act Provisions
VI. Subletting or Assigning the Contract
VII. Safety: Accident Prevention
VIII. False Statements Concerning Highway Projects
IX. Implementation of Clean Air Act and Federal Water Pollution Control Act
X. Compliance with Governmentwide Suspension and Debarment Requirements
XI. Certification Regarding Use of Contract Funds for Lobbying

ATTACHMENTS

A. Employment and Materials Preference for Appalachian Development Highway System or Appalachian Local Access Road Contracts (included in Appalachian contracts only)

I. GENERAL

1. Form FHWA-1273 must be physically incorporated in each construction contract funded under Title 23 (excluding emergency contracts solely intended for debris removal). The contractor (or subcontractor) must insert this form in each subcontract and further require its inclusion in all lower tier subcontracts (excluding purchase orders, rental agreements and other agreements for supplies or services).

   The applicable requirements of Form FHWA-1273 are incorporated by reference for work done under any purchase order, rental agreement or agreement for other services. The prime contractor shall be responsible for compliance by any subcontractor, lower-tier subcontractor or service provider.

   Form FHWA-1273 must be included in all Federal-aid design-build contracts, in all subcontracts and in lower tier subcontracts (excluding subcontracts for design services, purchase orders, rental agreements and other agreements for supplies or services). The design-builder shall be responsible for compliance by any subcontractor, lower-tier subcontractor or service provider.

   Contracting agencies may reference Form FHWA-1273 in bid proposal or request for proposal documents, however, the Form FHWA-1273 must be physically incorporated (not referenced) in all contracts, subcontracts and lower-tier subcontracts (excluding purchase orders, rental agreements and other agreements for supplies or services related to a construction contract).
2. Subject to the applicability criteria noted in the following sections, these contract provisions shall apply to all work performed on the contract by the contractor's own organization and with the assistance of workers under the contractor's immediate superintendence and to all work performed on the contract by piecework, station work, or by subcontract.
3. A breach of any of the stipulations contained in these Required Contract Provisions may be sufficient grounds for withholding of progress payments, withholding of final payment, termination of the contract, suspension / debarment or any other action determined to be appropriate by the contracting agency and FHWA.
4. Selection of Labor: During the performance of this contract, the contractor shall not use convict labor for any purpose within the limits of a construction project on a Federal-aid highway unless it is labor performed by convicts who are on parole, supervised release, or probation. The term Federal-aid highway does not include roadways functionally classified as local roads or rural minor collectors.

II. NONDISCRIMINATION

The provisions of this section related to 23 CFR Part 230 are applicable to all Federal-aid construction contracts and to all related construction subcontracts of $10,000 or more. The provisions of 23 CFR Part 230 are not applicable to material supply, engineering, or architectural service contracts.

In addition, the contractor and all subcontractors must comply with the following policies: Executive Order 11246, 41 CFR 60, 29 CFR 1625-1627, Title 23 USC Section 140, the Rehabilitation Act of 1973, as amended (29 USC 794), Title VI of the Civil Rights Act of 1964, as amended, and related regulations including 49 CFR Parts 21, 26 and 27; and 23 CFR Parts 200, 230, and 633.

The contractor and all subcontractors must comply with: the requirements of the Equal Opportunity Clause in 41 CFR 60-1.4(b) and, for all construction contracts exceeding $10,000, the Standard Federal Equal Employment Opportunity Construction Contract Specifications in 41 CFR 60-4.3.

Note: The U.S. Department of Labor has exclusive authority to determine compliance with Executive Order 11246 and the policies of the Secretary of Labor including 41 CFR 60, and 29 CFR 1625-1627. The contracting agency and the FHWA have the authority and the responsibility to ensure compliance with Title 23 USC Section 140, the Rehabilitation Act of 1973, as amended (29 USC 794), and Title VI of the Civil Rights Act of 1964, as amended, and related regulations including 49 CFR Parts 21, 26 and 27; and 23 CFR Parts 200, 230, and 633.

The following provision is adopted from 23 CFR 230, Appendix A, with appropriate revisions to conform to the U.S. Department of Labor (US DOL) and FHWA requirements.

1. **Equal Employment Opportunity:** Equal employment opportunity (EEO) requirements not to discriminate and to take affirmative action to assure equal opportunity as set forth under laws, executive orders, rules, regulations (28 CFR 35, 29 CFR 1630, 29 CFR 1625-1627, 41 CFR 60 and 49 CFR 27) and orders of the Secretary of Labor as modified by the provisions prescribed herein, and imposed pursuant to 23 U.S.C. 140 shall constitute the EEO and specific affirmative action standards for the contractor's project activities under this contract. The provisions of the Americans with Disabilities Act of 1990 (42 U.S.C. 12101 et seq.) set forth under 28 CFR 35 and 29 CFR 1630 are

incorporated by reference in this contract. In the execution of this contract, the contractor agrees to comply with the following minimum specific requirement activities of EEO:

a. The contractor will work with the contracting agency and the Federal Government to ensure that it has made every good faith effort to provide equal opportunity with respect to all of its terms and conditions of employment and in their review of activities under the contract.
b. The contractor will accept as its operating policy the following statement:
"It is the policy of this Company to assure that applicants are employed, and that employees are treated during employment, without regard to their race, religion, sex, color, national origin, age or disability. Such action shall include: employment, upgrading, demotion, or transfer; recruitment or recruitment advertising; layoff or termination; rates of pay or other forms of compensation; and selection for training, including apprenticeship, pre-apprenticeship, and/or on-the-job training."

2. **EEO Officer:** The contractor will designate and make known to the contracting officers an EEO Officer who will have the responsibility for and must be capable of effectively administering and promoting an active EEO program and who must be assigned adequate authority and responsibility to do so.
3. **Dissemination of Policy:** All members of the contractor's staff who are authorized to hire, supervise, promote, and discharge employees, or who recommend such action, or who are substantially involved in such action, will be made fully cognizant of, and will implement, the contractor's EEO policy and contractual responsibilities to provide EEO in each grade and classification of employment. To ensure that the above agreement will be met, the following actions will be taken as a minimum:
   a. Periodic meetings of supervisory and personnel office employees will be conducted before the start of work and then not less often than once every six months, at which time the contractor's EEO policy and its implementation will be reviewed and explained. The meetings will be conducted by the EEO Officer.
   b. All new supervisory or personnel office employees will be given a thorough indoctrination by the EEO Officer, covering all major aspects of the contractor's EEO obligations within thirty days following their reporting for duty with the contractor.
   c. All personnel who are engaged in direct recruitment for the project will be instructed by the EEO Officer in the contractor's procedures for locating and hiring minorities and women.
   d. Notices and posters setting forth the contractor's EEO policy will be placed in areas readily accessible to employees, applicants for employment and potential employees.
   e. The contractor's EEO policy and the procedures to implement such policy will be brought to the attention of employees by means of meetings, employee handbooks, or other appropriate means.
4. **Recruitment:** When advertising for employees, the contractor will include in all advertisements for employees the notation: "An Equal Opportunity Employer." All such advertisements will be placed in publications having a large circulation among minorities and women in the area from which the project work force would normally be derived.
   a. The contractor will, unless precluded by a valid bargaining agreement, conduct systematic and direct recruitment through public and private employee referral sources likely to yield qualified minorities and women. To meet this requirement, the contractor will identify sources of potential minority group employees, and establish with such identified sources procedures whereby minority and women applicants may be referred to the contractor for employment consideration.
   b. In the event the contractor has a valid bargaining agreement providing for exclusive hiring hall referrals, the contractor is expected to observe the provisions of that agreement to the extent that the system meets the contractor's compliance with EEO contract provisions. Where implementation of such an agreement has the effect of discriminating against minorities or women, or obligates the contractor to do the same, such implementation violates Federal nondiscrimination provisions.
   c. The contractor will encourage its present employees to refer minorities and women as applicants for employment. Information and procedures with regard to referring such applicants will be discussed with employees.
5. **Personnel Actions:** Wages, working conditions, and employee benefits shall be established and administered, and personnel actions of every type, including hiring, upgrading, promotion, transfer, demotion, layoff, and termination, shall be taken without regard to race, color, religion, sex, national origin, age or disability. The following procedures shall be followed:
   a. The contractor will conduct periodic inspections of project sites to insure that working conditions and employee facilities do not indicate discriminatory treatment of project site personnel.
   b. The contractor will periodically evaluate the spread of wages paid within each classification to determine any evidence of discriminatory wage practices.
   c. The contractor will periodically review selected personnel actions in depth to determine whether there is evidence of discrimination. Where evidence is found, the contractor will promptly take corrective action. If the review indicates that the discrimination may extend beyond the actions reviewed, such corrective action shall include all affected persons.
   d. The contractor will promptly investigate all complaints of alleged discrimination made to the contractor in connection with its obligations under this contract, will attempt to resolve such complaints, and will take appropriate corrective action within a reasonable time. If the investigation indicates that the discrimination may affect persons other than the complainant, such corrective action shall include such other persons. Upon completion of each investigation, the contractor will inform every complainant of all of their avenues of appeal.
6. **Training and Promotion:**
   a. The contractor will assist in locating, qualifying, and increasing the skills of minorities and women who are applicants for employment or current employees. Such efforts should be aimed at developing full journey level status employees in the type of trade or job classification involved.
   b. Consistent with the contractor's work force requirements and as permissible under Federal and State regulations, the contractor shall make full use of training programs, i.e., apprenticeship, and on-the-job training programs for the geographical area of contract performance. In the event a special provision for training is provided under this contract, this subparagraph will be superseded as indicated in the special provision. The contracting agency may reserve training positions for persons who receive welfare assistance in accordance with 23 U.S.C. 140(a).
   c The contractor will advise employees and applicants for employment of available training programs and entrance requirements for each.
   d. The contractor will periodically review the training and promotion potential of employees who are minorities and women and will encourage eligible employees to apply for such training and promotion.

7. **Unions:** If the contractor relies in whole or in part upon unions as a source of employees, the contractor will use good faith efforts to obtain the cooperation of such unions to increase opportunities for minorities and women. Actions by the contractor, either directly or through a contractor's association acting as agent, will include the procedures set forth below:
   a. The contractor will use good faith efforts to develop, in cooperation with the unions, joint training programs aimed toward qualifying more minorities and women for membership in the unions and increasing the skills of minorities and women so that they may qualify for higher paying employment.
   b. The contractor will use good faith efforts to incorporate an EEO clause into each union agreement to the end that such union will be contractually bound to refer applicants without regard to their race, color, religion, sex, national origin, age or disability.
   c. The contractor is to obtain information as to the referral practices and policies of the labor union except that to the extent such information is within the exclusive possession of the labor union and such labor union refuses to furnish such information to the contractor, the contractor shall so certify to the contracting agency and shall set forth what efforts have been made to obtain such information.
   d. In the event the union is unable to provide the contractor with a reasonable flow of referrals within the time limit set forth in the collective bargaining agreement, the contractor will, through independent recruitment efforts, fill the employment vacancies without regard to race, color, religion, sex, national origin, age or disability; making full efforts to obtain qualified and/or qualifiable minorities and women. The failure of a union to provide sufficient referrals (even though it is obligated to provide exclusive referrals under the terms of a collective bargaining agreement) does not relieve the contractor from the requirements of this paragraph. In the event the union referral practice prevents the contractor from meeting the obligations pursuant to Executive Order 11246, as amended, and these special provisions, such contractor shall immediately notify the contracting agency.
8. **Reasonable Accommodation for Applicants / Employees with Disabilities:** The contractor must be familiar with the requirements for and comply with the Americans with Disabilities Act and all rules and regulations established there under. Employers must provide reasonable accommodation in all employment activities unless to do so would cause an undue hardship.
9. **Selection of Subcontractors, Procurement of Materials and Leasing of Equipment:** The contractor shall not discriminate on the grounds of race, color, religion, sex, national origin, age or disability in the selection and retention of subcontractors, including procurement of materials and leases of equipment. The contractor shall take all necessary and reasonable steps to ensure nondiscrimination in the administration of this contract.
   a. The contractor shall notify all potential subcontractors and suppliers and lessors of their EEO obligations under this contract.
   b. The contractor will use good faith efforts to ensure subcontractor compliance with their EEO obligations.
10. **Assurance Required by 49 CFR 26.13(b):**
   a. The requirements of 49 CFR Part 26 and the State DOT's U.S. DOT-approved DBE program are incorporated by reference.
   b. The contractor or subcontractor shall not discriminate on the basis of race, color, national origin, or sex in the performance of this contract. The contractor shall carry out applicable requirements of 49 CFR Part 26 in the award and administration of DOT-assisted contracts. Failure by the contractor to carry out these requirements is a material breach of this contract, which may result in the termination of this contract or such other remedy as the contracting agency deems appropriate.
11. **Records and Reports:** The contractor shall keep such records as necessary to document compliance with the EEO requirements. Such records shall be retained for a period of three years following the date of the final payment to the contractor for all contract work and shall be available at reasonable times and places for inspection by authorized representatives of the contracting agency and the FHWA.
   a. The records kept by the contractor shall document the following:
      (1) The number and work hours of minority and non-minority group members and women employed in each work classification on the project;
      (2) The progress and efforts being made in cooperation with unions, when applicable, to increase employment opportunities for minorities and women; and
      (3) The progress and efforts being made in locating, hiring, training, qualifying, and upgrading minorities and women;
   b. The contractors and subcontractors will submit an annual report to the contracting agency each July for the duration of the project, indicating the number of minority, women, and non-minority group employees currently engaged in each work classification required by the contract work. This information is to be reported on Form FHWA-1391. The staffing data should represent the project work force on board in all or any part of the last payroll period preceding the end of July. If on-the-job training is being required by special provision, the contractor will be required to collect and report training data. The employment data should reflect the work force on board during all or any part of the last payroll period preceding the end of July.

III. NONSEGREGATED FACILITIES

This provision is applicable to all Federal-aid construction contracts and to all related construction subcontracts of $10,000 or more.

The contractor must ensure that facilities provided for employees are provided in such a manner that segregation on the basis of race, color, religion, sex, or national origin cannot result. The contractor may neither require such segregated use by written or oral policies nor tolerate such use by employee custom. The contractor's obligation extends further to ensure that its employees are not assigned to perform their services at any location, under the contractor's control, where the facilities are segregated. The term "facilities" includes waiting rooms, work areas, restaurants and other eating areas, time clocks, restrooms, washrooms, locker rooms, and other storage or dressing areas, parking lots, drinking fountains, recreation or entertainment areas, transportation, and housing provided for employees. The contractor shall provide separate or single-user restrooms and necessary dressing or sleeping areas to assure privacy between sexes.

IV. DAVIS-BACON AND RELATED ACT PROVISIONS

This section is applicable to all Federal-aid construction projects exceeding $2,000 and to all related subcontracts and lower-tier subcontracts (regardless of subcontract size). The requirements apply to all projects located within the right-of-way of a roadway that is functionally classified as Federal-aid highway. This excludes roadways functionally classified as local roads or rural minor collectors, which are exempt. Contracting agencies may elect to apply these requirements to other projects.

The following provisions are from the U.S. Department of Labor regulations in 29 CFR 5.5 "Contract provisions and related matters" with minor revisions to conform to the FHWA-1273 format and FHWA program requirements.

1. **Minimum wages**
   a. All laborers and mechanics employed or working upon the site of the work, will be paid unconditionally and not less often than once a week, and without subsequent deduction or rebate on any account (except such payroll deductions as are permitted by regulations issued by the

Secretary of Labor under the Copeland Act (29 CFR part 3)), the full amount of wages and bona fide fringe benefits (or cash equivalents thereof) due at time of payment computed at rates not less than those contained in the wage determination of the Secretary of Labor which is attached hereto and made a part hereof, regardless of any contractual relationship which may be alleged to exist between the contractor and such laborers and mechanics.

Contributions made or costs reasonably anticipated for bona fide fringe benefits under section 1(b)(2) of the Davis-Bacon Act on behalf of laborers or mechanics are considered wages paid to such laborers or mechanics, subject to the provisions of paragraph 1.d. of this section; also, regular contributions made or costs incurred for more than a weekly period (but not less often than quarterly) under plans, funds, or programs which cover the particular weekly period, are deemed to be constructively made or incurred during such weekly period. Such laborers and mechanics shall be paid the appropriate wage rate and fringe benefits on the wage determination for the classification of work actually performed, without regard to skill, except as provided in 29 CFR 5.5(a)(4). Laborers or mechanics performing work in more than one classification may be compensated at the rate specified for each classification for the time actually worked therein: Provided, That the employer's payroll records accurately set forth the time spent in each classification in which work is performed. The wage determination (including any additional classification and wage rates conformed under paragraph 1.b. of this section) and the Davis-Bacon poster (WH–1321) shall be posted at all times by the contractor and its subcontractors at the site of the work in a prominent and accessible place where it can be easily seen by the workers.

b. (1) The contracting officer shall require that any class of laborers or mechanics, including helpers, which is not listed in the wage determination and which is to be employed under the contract shall be classified in conformance with the wage determination. The contracting officer shall approve an additional classification and wage rate and fringe benefits therefore only when the following criteria have been met:

(i) The work to be performed by the classification requested is not performed by a classification in the wage determination; and

(ii) The classification is utilized in the area by the construction industry; and

(iii) The proposed wage rate, including any bona fide fringe benefits, bears a reasonable relationship to the wage rates contained in the wage determination.

(2) If the contractor and the laborers and mechanics to be employed in the classification (if known), or their representatives, and the contracting officer agree on the classification and wage rate (including the amount designated for fringe benefits where appropriate), a report of the action taken shall be sent by the contracting officer to the Administrator of the Wage and Hour Division, Employment Standards Administration, U.S. Department of Labor, Washington, DC 20210. The Administrator, or an authorized representative, will approve, modify, or disapprove every additional classification action within 30 days of receipt and so advise the contracting officer or will notify the contracting officer within the 30-day period that additional time is necessary.

(3) In the event the contractor, the laborers or mechanics to be employed in the classification or their representatives, and the contracting officer do not agree on the proposed classification and wage rate (including the amount designated for fringe benefits, where appropriate), the contracting officer shall refer the questions, including the views of all interested parties and the recommendation of the contracting officer, to the Wage and Hour Administrator for determination. The Wage and Hour Administrator, or an authorized representative, will issue a determination within 30 days of receipt and so advise the contracting officer or will notify the contracting officer within the 30-day period that additional time is necessary.

(4) The wage rate (including fringe benefits where appropriate) determined pursuant to paragraphs 1.b.(2) or 1.b.(3) of this section, shall be paid to all workers performing work in the classification under this contract from the first day on which work is performed in the classification.

c. Whenever the minimum wage rate prescribed in the contract for a class of laborers or mechanics includes a fringe benefit which is not expressed as an hourly rate, the contractor shall either pay the benefit as stated in the wage determination or shall pay another bona fide fringe benefit or an hourly cash equivalent thereof.

d. If the contractor does not make payments to a trustee or other third person, the contractor may consider as part of the wages of any laborer or mechanic the amount of any costs reasonably anticipated in providing bona fide fringe benefits under a plan or program, Provided, That the Secretary of Labor has found, upon the written request of the contractor, that the applicable standards of the Davis-Bacon Act have been met. The Secretary of Labor may require the contractor to set aside in a separate account assets for the meeting of obligations under the plan or program.

2. **Withholding.** The contracting agency shall upon its own action or upon written request of an authorized representative of the Department of Labor, withhold or cause to be withheld from the contractor under this contract, or any other Federal contract with the same prime contractor, or any other federally-assisted contract subject to Davis-Bacon prevailing wage requirements, which is held by the same prime contractor, so much of the accrued payments or advances as may be considered necessary to pay laborers and mechanics, including apprentices, trainees, and helpers, employed by the contractor or any subcontractor the full amount of wages required by the contract. In the event of failure to pay any laborer or mechanic, including any apprentice, trainee, or helper, employed or working on the site of the work, all or part of the wages required by the contract, the contracting agency may, after written notice to the contractor, take such action as may be necessary to cause the suspension of any further payment, advance, or guarantee of funds until such violations have ceased.

3. **Payrolls and basic records**

a. Payrolls and basic records relating thereto shall be maintained by the contractor during the course of the work and preserved for a period of three years thereafter for all laborers and mechanics working at the site of the work. Such records shall contain the name, address, and social security number of each such worker, his or her correct classification, hourly rates of wages paid (including rates of contributions or costs anticipated for bona fide fringe benefits or cash equivalents thereof of the types described in section 1(b)(2)(B) of the Davis-Bacon Act), daily and weekly number of hours worked, deductions made and actual wages paid. Whenever the Secretary of Labor has found under 29 CFR 5.5(a)(1)(iv) that the wages of any laborer or mechanic include the amount of any costs reasonably anticipated in providing benefits under a plan or program described in section 1(b)(2)(B) of the Davis-Bacon Act, the contractor shall maintain records which show that the commitment to provide such benefits is enforceable, that the plan or program is financially responsible, and that the plan or program has been communicated in writing to the laborers or mechanics affected, and records which show the costs anticipated or the actual cost incurred in providing such benefits. Contractors employing apprentices or trainees under approved programs shall maintain written evidence of the registration of apprenticeship programs and certification of trainee programs, the registration of the apprentices and trainees, and the ratios and wage rates prescribed in the applicable programs.

b. (1) The contractor shall submit weekly for each week in which any contract work is performed a copy of all payrolls to the contracting agency. The payrolls submitted shall set out accurately and completely all of the information required to be maintained under 29 CFR 5.5(a)(3)(i), except that full social security numbers and home addresses shall not be included on weekly transmittals. Instead the

payrolls shall only need to include an individually identifying number for each employee (e.g. , the last four digits of the employee's social security number). The required weekly payroll information may be submitted in any form desired. Optional Form WH–347 is available for this purpose from the Wage and Hour Division Web site at http://www.dol.gov/esa/whd/forms/ wh347instr.htm or its successor site. The prime contractor is responsible for the submission of copies of payrolls by all subcontractors. Contractors and subcontractors shall maintain the full social security number and current address of each covered worker, and shall provide them upon request to the contracting agency for transmission to the State DOT, the FHWA or the Wage and Hour Division of the Department of Labor for purposes of an investigation or audit of compliance with prevailing wage requirements. It is not a violation of this section for a prime contractor to require a subcontractor to provide addresses and social security numbers to the prime contractor for its own records, without weekly submission to the contracting agency.

(2) Each payroll submitted shall be accompanied by a "Statement of Compliance," signed by the contractor or subcontractor or his or her agent who pays or supervises the payment of the persons employed under the contract and shall certify the following:

(i) That the payroll for the payroll period contains the information required to be provided under §5.5 (a)(3)(ii) of Regulations, 29 CFR part 5, the appropriate information is being maintained under §5.5 (a)(3)(i) of Regulations, 29 CFR part 5, and that such information is correct and complete;

(ii) That each laborer or mechanic (including each helper, apprentice, and trainee) employed on the contract during the payroll period has been paid the full weekly wages earned, without rebate, either directly or indirectly, and that no deductions have been made either directly or indirectly from the full wages earned, other than permissible deductions as set forth in Regulations, 29 CFR part 3;

(iii) That each laborer or mechanic has been paid not less than the applicable wage rates and fringe benefits or cash equivalents for the classification of work performed, as specified in the applicable wage determination incorporated into the contract.

(3) The weekly submission of a properly executed certification set forth on the reverse side of Optional Form WH–347 shall satisfy the requirement for submission of the "Statement of Compliance" required by paragraph 3.b.(2) of this section.

(4) The falsification of any of the above certifications may subject the contractor or subcontractor to civil or criminal prosecution under section 1001 of title 18 and section 231 of title 31 of the United States Code.

c. The contractor or subcontractor shall make the records required under paragraph 3.a. of this section available for inspection, copying, or transcription by authorized representatives of the contracting agency, the State DOT, the FHWA, or the Department of Labor, and shall permit such representatives to interview employees during working hours on the job. If the contractor or subcontractor fails to submit the required records or to make them available, the FHWA may, after written notice to the contractor, the contracting agency or the State DOT, take such action as may be necessary to cause the suspension of any further payment, advance, or guarantee of funds. Furthermore, failure to submit the required records upon request or to make such records available may be grounds for debarment action pursuant to 29 CFR 5.12.

4. **Apprentices and trainees**

a. Apprentices (programs of the USDOL). Apprentices will be permitted to work at less than the predetermined rate for the work they performed when they are employed pursuant to and individually registered in a bona fide apprenticeship program registered with the U.S. Department of Labor, Employment and Training Administration, Office of Apprenticeship Training, Employer and Labor Services, or with a State Apprenticeship Agency recognized by the Office, or if a person is employed in his or her first 90 days of probationary employment as an apprentice in such an apprenticeship program, who is not individually registered in the program, but who has been certified by the Office of Apprenticeship Training, Employer and Labor Services or a State Apprenticeship Agency (where appropriate) to be eligible for probationary employment as an apprentice.

The allowable ratio of apprentices to journeymen on the job site in any craft classification shall not be greater than the ratio permitted to the contractor as to the entire work force under the registered program. Any worker listed on a payroll at an apprentice wage rate, who is not registered or otherwise employed as stated above, shall be paid not less than the applicable wage rate on the wage determination for the classification of work actually performed. In addition, any apprentice performing work on the job site in excess of the ratio permitted under the registered program shall be paid not less than the applicable wage rate on the wage determination for the work actually performed. Where a contractor is performing construction on a project in a locality other than that in which its program is registered, the ratios and wage rates (expressed in percentages of the journeyman's hourly rate) specified in the contractor's or subcontractor's registered program shall be observed.

Every apprentice must be paid at not less than the rate specified in the registered program for the apprentice's level of progress, expressed as a percentage of the journeymen hourly rate specified in the applicable wage determination. Apprentices shall be paid fringe benefits in accordance with the provisions of the apprenticeship program. If the apprenticeship program does not specify fringe benefits, apprentices must be paid the full amount of fringe benefits listed on the wage determination for the applicable classification. If the Administrator determines that a different practice prevails for the applicable apprentice classification, fringes shall be paid in accordance with that determination.

In the event the Office of Apprenticeship Training, Employer and Labor Services, or a State Apprenticeship Agency recognized by the Office, withdraws approval of an apprenticeship program, the contractor will no longer be permitted to utilize apprentices at less than the applicable predetermined rate for the work performed until an acceptable program is approved.

b. Trainees (programs of the USDOL). Except as provided in 29 CFR 5.16, trainees will not be permitted to work at less than the predetermined rate for the work performed unless they are employed pursuant to and individually registered in a program which has received prior approval, evidenced by formal certification by the U.S. Department of Labor, Employment and Training Administration.

The ratio of trainees to journeymen on the job site shall not be greater than permitted under the plan approved by the Employment and Training Administration.

Every trainee must be paid at not less than the rate specified in the approved program for the trainee's level of progress, expressed as a percentage of the journeyman hourly rate specified in the applicable wage determination. Trainees shall be paid fringe benefits in accordance with the provisions of the trainee program. If the trainee program does not mention fringe benefits, trainees shall be paid the full amount of fringe benefits listed on the wage determination unless the Administrator of the Wage and Hour Division determines that there is an apprenticeship program associated with the corresponding journeyman wage rate on the wage determination which provides for less than full fringe benefits for apprentices. Any employee listed on the payroll at a trainee rate who is not registered and participating in a training plan approved by the Employment and Training Administration shall be paid not less than the applicable wage rate on the wage determination for the classification of work actually performed. In addition, any trainee performing work on the job site in excess of the ratio permitted under the registered program shall be paid not less than the applicable wage rate on the wage determination for the work actually performed.

In the event the Employment and Training Administration withdraws approval of a training program, the contractor will no longer be permitted to utilize trainees at less than the applicable predetermined rate for the work performed until an acceptable program is approved.

c. Equal employment opportunity. The utilization of apprentices, trainees and journeymen under this part shall be in conformity with the equal employment opportunity requirements of Executive Order 11246, as amended, and 29 CFR part 30.

d. Apprentices and Trainees (programs of the U.S. DOT). Apprentices and trainees working under apprenticeship and skill training programs which have been certified by the Secretary of Transportation as promoting EEO in connection with Federal-aid highway construction programs are not subject to the requirements of paragraph 4 of this Section IV. The straight time hourly wage rates for apprentices and trainees under such programs will be established by the particular programs. The ratio of apprentices and trainees to journeymen shall not be greater than permitted by the terms of the particular program.

5. **Compliance with Copeland Act requirements.** The contractor shall comply with the requirements of 29 CFR part 3, which are incorporated by reference in this contract.
6. **Subcontracts.** The contractor or subcontractor shall insert Form FHWA-1273 in any subcontracts and also require the subcontractors to include Form FHWA-1273 in any lower tier subcontracts. The prime contractor shall be responsible for the compliance by any subcontractor or lower tier subcontractor with all the contract clauses in 29 CFR 5.5.
7. **Contract termination:** debarment. A breach of the contract clauses in 29 CFR 5.5 may be grounds for termination of the contract, and for debarment as a contractor and a subcontractor as provided in 29 CFR 5.12.
8. **Compliance with Davis-Bacon and Related Act requirements.** All rulings and interpretations of the Davis-Bacon and Related Acts contained in 29 CFR parts 1, 3, and 5 are herein incorporated by reference in this contract.
9. **Disputes concerning labor standards.** Disputes arising out of the labor standards provisions of this contract shall not be subject to the general disputes clause of this contract. Such disputes shall be resolved in accordance with the procedures of the Department of Labor set forth in 29 CFR parts 5, 6, and 7. Disputes within the meaning of this clause include disputes between the contractor (or any of its subcontractors) and the contracting agency, the U.S. Department of Labor, or the employees or their representatives.
10. **Certification of eligibility.**
    a. By entering into this contract, the contractor certifies that neither it (nor he or she) nor any person or firm who has an interest in the contractor's firm is a person or firm ineligible to be awarded Government contracts by virtue of section 3(a) of the Davis-Bacon Act or 29 CFR 5.12(a)(1).
    b. No part of this contract shall be subcontracted to any person or firm ineligible for award of a Government contract by virtue of section 3(a) of the Davis-Bacon Act or 29 CFR 5.12(a)(1).
    c. The penalty for making false statements is prescribed in the U.S. Criminal Code, 18 U.S.C. 1001.

V. CONTRACT WORK HOURS AND SAFETY STANDARDS ACT

The following clauses apply to any Federal-aid construction contract in an amount in excess of $100,000 and subject to the overtime provisions of the Contract Work Hours and Safety Standards Act. These clauses shall be inserted in addition to the clauses required by 29 CFR 5.5(a) or 29 CFR 4.6. As used in this paragraph, the terms laborers and mechanics include watchmen and guards.

1. **Overtime requirements.** No contractor or subcontractor contracting for any part of the contract work which may require or involve the employment of laborers or mechanics shall require or permit any such laborer or mechanic in any workweek in which he or she is employed on such work to work in excess of forty hours in such workweek unless such laborer or mechanic receives compensation at a rate not less than one and one-half times the basic rate of pay for all hours worked in excess of forty hours in such workweek.
2. **Violation; liability for unpaid wages; liquidated damages.** In the event of any violation of the clause set forth in paragraph (1.) of this section, the contractor and any subcontractor responsible therefor shall be liable for the unpaid wages. In addition, such contractor and subcontractor shall be liable to the United States (in the case of work done under contract for the District of Columbia or a territory, to such District or to such territory), for liquidated damages. Such liquidated damages shall be computed with respect to each individual laborer or mechanic, including watchmen and guards, employed in violation of the clause set forth in paragraph (1.) of this section, in the sum of $10 for each calendar day on which such individual was required or permitted to work in excess of the standard workweek of forty hours without payment of the overtime wages required by the clause set forth in paragraph (1.) of this section.
3. **Withholding for unpaid wages and liquidated damages.** The FHWA or the contacting agency shall upon its own action or upon written request of an authorized representative of the Department of Labor withhold or cause to be withheld, from any moneys payable on account of work performed by the contractor or subcontractor under any such contract or any other Federal contract with the same prime contractor, or any other federally-assisted contract subject to the Contract Work Hours and Safety Standards Act, which is held by the same prime contractor, such sums as may be determined to be necessary to satisfy any liabilities of such contractor or subcontractor for unpaid wages and liquidated damages as provided in the clause set forth in paragraph (2.) of this section.
4. **Subcontracts.** The contractor or subcontractor shall insert in any subcontracts the clauses set forth in paragraph (1.) through (4.) of this section and also a clause requiring the subcontractors to include these clauses in any lower tier subcontracts. The prime contractor shall be responsible for compliance by any subcontractor or lower tier subcontractor with the clauses set forth in paragraphs (1.) through (4.) of this section.

VI. SUBLETTING OR ASSIGNING THE CONTRACT

This provision is applicable to all Federal-aid construction contracts on the National Highway System.

1. The contractor shall perform with its own organization contract work amounting to not less than 30 percent (or a greater percentage if specified elsewhere in the contract) of the total original contract price, excluding any specialty items designated by the contracting agency. Specialty items may be performed by subcontract and the amount of any such specialty items performed may be deducted from the total original contract price before computing the amount of work required to be performed by the contractor's own organization (23 CFR 635.116).
    a. The term “perform work with its own organization” refers to workers employed or leased by the prime contractor, and equipment owned or rented by the prime contractor, with or without operators. Such term does not include employees or equipment of a subcontractor or lower tier subcontractor, agents of the prime contractor, or any other assignees. The term may include payments for the costs of hiring leased employees from an employee leasing firm meeting all relevant Federal and State regulatory requirements. Leased employees may only be included in this term if the prime contractor meets all of the following conditions:
    (1) the prime contractor maintains control over the supervision of the day-to-day activities of the leased employees;

(2) the prime contractor remains responsible for the quality of the work of the leased employees;
(3) the prime contractor retains all power to accept or exclude individual employees from work on the project; and
(4) the prime contractor remains ultimately responsible for the payment of predetermined minimum wages, the submission of payrolls, statements of compliance and all other Federal regulatory requirements.

b. "Specialty Items" shall be construed to be limited to work that requires highly specialized knowledge, abilities, or equipment not ordinarily available in the type of contracting organizations qualified and expected to bid or propose on the contract as a whole and in general are to be limited to minor components of the overall contract.

2. The contract amount upon which the requirements set forth in paragraph (1) of Section VI is computed includes the cost of material and manufactured products which are to be purchased or produced by the contractor under the contract provisions.
3. The contractor shall furnish (a) a competent superintendent or supervisor who is employed by the firm, has full authority to direct performance of the work in accordance with the contract requirements, and is in charge of all construction operations (regardless of who performs the work) and (b) such other of its own organizational resources (supervision, management, and engineering services) as the contracting officer determines is necessary to assure the performance of the contract.
4. No portion of the contract shall be sublet, assigned or otherwise disposed of except with the written consent of the contracting officer, or authorized representative, and such consent when given shall not be construed to relieve the contractor of any responsibility for the fulfillment of the contract. Written consent will be given only after the contracting agency has assured that each subcontract is evidenced in writing and that it contains all pertinent provisions and requirements of the prime contract.
5. The 30% self-performance requirement of paragraph (1) is not applicable to design-build contracts; however, contracting agencies may establish their own self-performance requirements.

VII. SAFETY: ACCIDENT PREVENTION

This provision is applicable to all Federal-aid construction contracts and to all related subcontracts.

1. In the performance of this contract the contractor shall comply with all applicable Federal, State, and local laws governing safety, health, and sanitation (23 CFR 635). The contractor shall provide all safeguards, safety devices and protective equipment and take any other needed actions as it determines, or as the contracting officer may determine, to be reasonably necessary to protect the life and health of employees on the job and the safety of the public and to protect property in connection with the performance of the work covered by the contract.
2. It is a condition of this contract, and shall be made a condition of each subcontract, which the contractor enters into pursuant to this contract, that the contractor and any subcontractor shall not permit any employee, in performance of the contract, to work in surroundings or under conditions which are unsanitary, hazardous or dangerous to his/her health or safety, as determined under construction safety and health standards (29 CFR 1926) promulgated by the Secretary of Labor, in accordance with Section 107 of the Contract Work Hours and Safety Standards Act (40 U.S.C. 3704).
3. Pursuant to 29 CFR 1926.3, it is a condition of this contract that the Secretary of Labor or authorized representative thereof, shall have right of entry to any site of contract performance to inspect or investigate the matter of compliance with the construction safety and health standards and to carry out the duties of the Secretary under Section 107 of the Contract Work Hours and Safety Standards Act (40 U.S.C.3704).

VIII. FALSE STATEMENTS CONCERNING HIGHWAY PROJECTS

This provision is applicable to all Federal-aid construction contracts and to all related subcontracts.

In order to assure high quality and durable construction in conformity with approved plans and specifications and a high degree of reliability on statements and representations made by engineers, contractors, suppliers, and workers on Federal-aid highway projects, it is essential that all persons concerned with the project perform their functions as carefully, thoroughly, and honestly as possible. Willful falsification, distortion, or misrepresentation with respect to any facts related to the project is a violation of Federal law. To prevent any misunderstanding regarding the seriousness of these and similar acts, Form FHWA-1022 shall be posted on each Federal-aid highway project (23 CFR 635) in one or more places where it is readily available to all persons concerned with the project:

18 U.S.C. 1020 reads as follows:

"Whoever, being an officer, agent, or employee of the United States, or of any State or Territory, or whoever, whether a person, association, firm, or corporation, knowingly makes any false statement, false representation, or false report as to the character, quality, quantity, or cost of the material used or to be used, or the quantity or quality of the work performed or to be performed, or the cost thereof in connection with the submission of plans, maps, specifications, contracts, or costs of construction on any highway or related project submitted for approval to the Secretary of Transportation; or

Whoever knowingly makes any false statement, false representation, false report or false claim with respect to the character, quality, quantity, or cost of any work performed or to be performed, or materials furnished or to be furnished, in connection with the construction of any highway or related project approved by the Secretary of Transportation; or

Whoever knowingly makes any false statement or false representation as to material fact in any statement, certificate, or report submitted pursuant to provisions of the Federal-aid Roads Act approved July 1, 1916, (39 Stat. 355), as amended and supplemented;

Shall be fined under this title or imprisoned not more than 5 years or both."

IX. IMPLEMENTATION OF CLEAN AIR ACT AND FEDERAL WATER POLLUTION CONTROL ACT

This provision is applicable to all Federal-aid construction contracts and to all related subcontracts.

By submission of this bid/proposal or the execution of this contract, or subcontract, as appropriate, the bidder, proposer, Federal-aid construction contractor, or subcontractor, as appropriate, will be deemed to have stipulated as follows:

1. That any person who is or will be utilized in the performance of this contract is not prohibited from receiving an award due to a violation of Section 508 of the Clean Water Act or Section 306 of the Clean Air Act.
2. That the contractor agrees to include or cause to be included the requirements of paragraph (1) of this Section X in every subcontract, and further agrees to take such action as the contracting agency may direct as a means of enforcing such requirements.

X. CERTIFICATION REGARDING DEBARMENT, SUSPENSION, INELIGIBILITY AND VOLUNTARY EXCLUSION

This provision is applicable to all Federal-aid construction contracts, design-build contracts, subcontracts, lower-tier subcontracts, purchase orders, lease agreements, consultant contracts or any other covered transaction requiring FHWA approval or that is estimated to cost $25,000 or more – as defined in 2 CFR Parts 180 and 1200.

1. **Instructions for Certification – First Tier Participants:**
   a. By signing and submitting this proposal, the prospective first tier participant is providing the certification set out below.
   b. The inability of a person to provide the certification set out below will not necessarily result in denial of participation in this covered transaction. The prospective first tier participant shall submit an explanation of why it cannot provide the certification set out below. The certification or explanation will be considered in connection with the department or agency's determination whether to enter into this transaction. However, failure of the prospective first tier participant to furnish a certification or an explanation shall disqualify such a person from participation in this transaction.
   c. The certification in this clause is a material representation of fact upon which reliance was placed when the contracting agency determined to enter into this transaction. If it is later determined that the prospective participant knowingly rendered an erroneous certification, in addition to other remedies available to the Federal Government, the contracting agency may terminate this transaction for cause of default.
   d. The prospective first tier participant shall provide immediate written notice to the contracting agency to whom this proposal is submitted if any time the prospective first tier participant learns that its certification was erroneous when submitted or has become erroneous by reason of changed circumstances.
   e. The terms "covered transaction," "debarred," "suspended," "ineligible," "participant," "person," "principal," and "voluntarily excluded," as used in this clause, are defined in 2 CFR Parts 180 and 1200. “First Tier Covered Transactions” refers to any covered transaction between a grantee or subgrantee of Federal funds and a participant (such as the prime or general contract). “Lower Tier Covered Transactions” refers to any covered transaction under a First Tier Covered Transaction (such as subcontracts). “First Tier Participant” refers to the participant who has entered into a covered transaction with a grantee or subgrantee of Federal funds (such as the prime or general contractor). “Lower Tier Participant” refers any participant who has entered into a covered transaction with a First Tier Participant or other Lower Tier Participants (such as subcontractors and suppliers).
   f. The prospective first tier participant agrees by submitting this proposal that, should the proposed covered transaction be entered into, it shall not knowingly enter into any lower tier covered transaction with a person who is debarred, suspended, declared ineligible, or voluntarily excluded from participation in this covered transaction, unless authorized by the department or agency entering into this transaction.
   g. The prospective first tier participant further agrees by submitting this proposal that it will include the clause titled "Certification Regarding Debarment, Suspension, Ineligibility and Voluntary Exclusion-Lower Tier Covered Transactions," provided by the department or contracting agency, entering into this covered transaction, without modification, in all lower tier covered transactions and in all solicitations for lower tier covered transactions exceeding the $25,000 threshold.
   h. A participant in a covered transaction may rely upon a certification of a prospective participant in a lower tier covered transaction that is not debarred, suspended, ineligible, or voluntarily excluded from the covered transaction, unless it knows that the certification is erroneous. A participant is responsible for ensuring that its principals are not suspended, debarred, or otherwise ineligible to participate in covered transactions. To verify the eligibility of its principals, as well as the eligibility of any lower tier prospective participants, each participant may, but is not required to, check the Excluded Parties List System website (https://www.epls.gov/), which is compiled by the General Services Administration.
   i. Nothing contained in the foregoing shall be construed to require the establishment of a system of records in order to render in good faith the certification required by this clause. The knowledge and information of the prospective participant is not required to exceed that which is normally possessed by a prudent person in the ordinary course of business dealings.
   j. Except for transactions authorized under paragraph (f) of these instructions, if a participant in a covered transaction knowingly enters into a lower tier covered transaction with a person who is suspended, debarred, ineligible, or voluntarily excluded from participation in this transaction, in addition to other remedies available to the Federal Government, the department or agency may terminate this transaction for cause or default.

* * * * *

2. **Certification Regarding Debarment, Suspension, Ineligibility and Voluntary Exclusion – First Tier Participants:**
   a. The prospective first tier participant certifies to the best of its knowledge and belief, that it and its principals:
      (1) Are not presently debarred, suspended, proposed for debarment, declared ineligible, or voluntarily excluded from participating in covered transactions by any Federal department or agency;
      (2) Have not within a three-year period preceding this proposal been convicted of or had a civil judgment rendered against them for commission of fraud or a criminal offense in connection with obtaining, attempting to obtain, or performing a public (Federal, State or local) transaction or contract under a public transaction; violation of Federal or State antitrust statutes or commission of embezzlement, theft, forgery, bribery, falsification or destruction of records, making false statements, or receiving stolen property;
      (3) Are not presently indicted for or otherwise criminally or civilly charged by a governmental entity (Federal, State or local) with commission of any of the offenses enumerated in paragraph (a)(2) of this certification; and
      (4) Have not within a three-year period preceding this application/proposal had one or more public transactions (Federal, State or local) terminated for cause or default.
   b. Where the prospective participant is unable to certify to any of the statements in this certification, such prospective participant shall attach an explanation to this proposal.
2. **Instructions for Certification - Lower Tier Participants:**
   (Applicable to all subcontracts, purchase orders and other lower tier transactions requiring prior FHWA approval or estimated to cost $25,000 or more - 2 CFR Parts 180 and 1200)
   a. By signing and submitting this proposal, the prospective lower tier is providing the certification set out below.
   b. The certification in this clause is a material representation of fact upon which reliance was placed when this transaction was entered into. If it is later determined that the prospective lower tier participant knowingly rendered an erroneous certification, in addition to other remedies available to the Federal Government, the department, or agency with which this transaction originated may pursue available remedies, including suspension and/or debarment.

c. The prospective lower tier participant shall provide immediate written notice to the person to which this proposal is submitted if at any time the prospective lower tier participant learns that its certification was erroneous by reason of changed circumstances.
d. The terms "covered transaction," "debarred," "suspended," "ineligible," "participant," "person," "principal," and "voluntarily excluded," as used in this clause, are defined in 2 CFR Parts 180 and 1200. You may contact the person to which this proposal is submitted for assistance in obtaining a copy of those regulations. “First Tier Covered Transactions” refers to any covered transaction between a grantee or subgrantee of Federal funds and a participant (such as the prime or general contract). “Lower Tier Covered Transactions” refers to any covered transaction under a First Tier Covered Transaction (such as subcontracts). “First Tier Participant” refers to the participant who has entered into a covered transaction with a grantee or subgrantee of Federal funds (such as the prime or general contractor). “Lower Tier Participant” refers any participant who has entered into a covered transaction with a First Tier Participant or other Lower Tier Participants (such as subcontractors and suppliers).
e. The prospective lower tier participant agrees by submitting this proposal that, should the proposed covered transaction be entered into, it shall not knowingly enter into any lower tier covered transaction with a person who is debarred, suspended, declared ineligible, or voluntarily excluded from participation in this covered transaction, unless authorized by the department or agency with which this transaction originated.
f. The prospective lower tier participant further agrees by submitting this proposal that it will include this clause titled "Certification Regarding Debarment, Suspension, Ineligibility and Voluntary Exclusion-Lower Tier Covered Transaction," without modification, in all lower tier covered transactions and in all solicitations for lower tier covered transactions exceeding the $25,000 threshold.
g. A participant in a covered transaction may rely upon a certification of a prospective participant in a lower tier covered transaction that is not debarred, suspended, ineligible, or voluntarily excluded from the covered transaction, unless it knows that the certification is erroneous. A participant is responsible for ensuring that its principals are not suspended, debarred, or otherwise ineligible to participate in covered transactions. To verify the eligibility of its principals, as well as the eligibility of any lower tier prospective participants, each participant may, but is not required to, check the Excluded Parties List System website (https://www.epls.gov/), which is compiled by the General Services Administration.
h. Nothing contained in the foregoing shall be construed to require establishment of a system of records in order to render in good faith the certification required by this clause. The knowledge and information of participant is not required to exceed that which is normally possessed by a prudent person in the ordinary course of business dealings.
i. Except for transactions authorized under paragraph e of these instructions, if a participant in a covered transaction knowingly enters into a lower tier covered transaction with a person who is suspended, debarred, ineligible, or voluntarily excluded from participation in this transaction, in addition to other remedies available to the Federal Government, the department or agency with which this transaction originated may pursue available remedies, including suspension and/or debarment.

* * * * *

Certification Regarding Debarment, Suspension, Ineligibility and Voluntary Exclusion--Lower Tier Participants:

1. The prospective lower tier participant certifies, by submission of this proposal, that neither it nor its principals is presently debarred, suspended, proposed for debarment, declared ineligible, or voluntarily excluded from participating in covered transactions by any Federal department or agency.
2. Where the prospective lower tier participant is unable to certify to any of the statements in this certification, such prospective participant shall attach an explanation to this proposal.

* * * * *

XI. CERTIFICATION REGARDING USE OF CONTRACT FUNDS FOR LOBBYING

This provision is applicable to all Federal-aid construction contracts and to all related subcontracts which exceed $100,000 (49 CFR 20).

1. The prospective participant certifies, by signing and submitting this bid or proposal, to the best of his or her knowledge and belief, that:
   a. No Federal appropriated funds have been paid or will be paid, by or on behalf of the undersigned, to any person for influencing or attempting to influence an officer or employee of any Federal agency, a Member of Congress, an officer or employee of Congress, or an employee of a Member of Congress in connection with the awarding of any Federal contract, the making of any Federal grant, the making of any Federal loan, the entering into of any cooperative agreement, and the extension, continuation, renewal, amendment, or modification of any Federal contract, grant, loan, or cooperative agreement.
   b. If any funds other than Federal appropriated funds have been paid or will be paid to any person for influencing or attempting to influence an officer or employee of any Federal agency, a Member of Congress, an officer or employee of Congress, or an employee of a Member of Congress in connection with this Federal contract, grant, loan, or cooperative agreement, the undersigned shall complete and submit Standard Form-LLL, "Disclosure Form to Report Lobbying," in accordance with its instructions.
2. This certification is a material representation of fact upon which reliance was placed when this transaction was made or entered into. Submission of this certification is a prerequisite for making or entering into this transaction imposed by 31 U.S.C. 1352. Any person who fails to file the required certification shall be subject to a civil penalty of not less than $10,000 and not more than $100,000 for each such failure.
3. The prospective participant also agrees by submitting its bid or proposal that the participant shall require that the language of this certification be included in all lower tier subcontracts, which exceed $100,000 and that all such recipients shall certify and disclose accordingly.

STANDARD SPECIAL PROVISION

ON-THE-JOB TRAINING

(10-16-07) (Rev. 4-21-15) Z-10

Description

The North Carolina Department of Transportation will administer a custom version of the Federal On-the-Job Training (OJT) Program, commonly referred to as the Alternate OJT Program. All contractors (existing and newcomers) will be automatically placed in the Alternate Program. Standard OJT requirements typically associated with individual projects will no longer be applied at the project level. Instead, these requirements will be applicable on an annual basis for each contractor administered by the OJT Program Manager.

On the Job Training shall meet the requirements of 23 CFR 230.107 (b), 23 USC – Section 140, this provision and the On-the-Job Training Program Manual.

The Alternate OJT Program will allow a contractor to train employees on Federal, State and privately funded projects located in North Carolina. However, priority shall be given to training employees on NCDOT Federal-Aid funded projects.

Minorities and Women

Developing, training and upgrading of minorities and women toward journeyman level status is a primary objective of this special training provision. Accordingly, the Contractor shall make every effort to enroll minority and women as trainees to the extent that such persons are available within a reasonable area of recruitment. This training commitment is not intended, and shall not be used, to discriminate against any applicant for training, whether a member of a minority group or not.

Assigning Training Goals

The Department, through the OJT Program Manager, will assign training goals for a calendar year based on the contractors' past three years' activity and the contractors' anticipated upcoming year's activity with the Department. At the beginning of each year, all contractors eligible will be contacted by the Department to determine the number of trainees that will be assigned for the upcoming calendar year. At that time the Contractor shall enter into an agreement with the Department to provide a self-imposed on-the-job training program for the calendar year. This agreement will include a specific number of annual training goals agreed to by both parties. The number of training assignments may range from 1 to 15 per contractor per calendar year. The Contractor shall sign an agreement to fulfill their annual goal for the year.\

Training Classifications

The Contractor shall provide on-the-job training aimed at developing full journeyman level workers in the construction craft/operator positions. Preference shall be given to providing training in the following skilled work classifications:

Equipment Operators	Office Engineers
Truck Drivers	Estimators
Carpenters	Iron / Reinforcing Steel Workers
Concrete Finishers	Mechanics
Pipe Layers	Welders

The Department has established common training classifications and their respective training requirements that may be used by the contractors. However, the classifications established are not all-inclusive. Where the training is oriented toward construction applications, training will be allowed in lower-level management positions such as office engineers and estimators. Contractors shall submit new classifications for specific job functions that their employees are performing. The Department will review and recommend for acceptance to FHWA the new classifications proposed by contractors, if applicable. New classifications shall meet the following requirements:

Proposed training classifications are reasonable and realistic based on the job skill classification needs, and

The number of training hours specified in the training classification is consistent with common practices and provides enough time for the trainee to obtain journeyman level status.

The Contractor may allow trainees to be trained by a subcontractor provided that the Contractor retains primary responsibility for meeting the training and this provision is made applicable to the subcontract. However, only the Contractor will receive credit towards the annual goal for the trainee.

Where feasible, 25 percent of apprentices or trainees in each occupation shall be in their first year of apprenticeship or training. The number of trainees shall be distributed among the work classifications on the basis of the contractor's needs and the availability of journeymen in the various classifications within a reasonable area of recruitment.

No employee shall be employed as a trainee in any classification in which they have successfully completed a training course leading to journeyman level status or in which they have been employed as a journeyman.

Records and Reports

The Contractor shall maintain enrollment, monthly and completion reports documenting company compliance under these contract documents. These documents and any other information as requested shall be submitted to the OJT Program Manager.

Upon completion and graduation of the program, the Contractor shall provide each trainee with a certification Certificate showing the type and length of training satisfactorily completed.

Trainee Interviews

All trainees enrolled in the program will receive an initial and Trainee/Post graduate interview conducted by the OJT program staff.

Trainee Wages

Contractors shall compensate trainees on a graduating pay scale based upon a percentage of the prevailing minimum journeyman wages (Davis-Bacon Act). Minimum pay shall be as follows:

60 percent	of the journeyman wage for the first half of the training period
75 percent	of the journeyman wage for the third quarter of the training period
90 percent	of the journeyman wage for the last quarter of the training period

In no instance shall a trainee be paid less than the local minimum wage. The Contractor shall adhere to the minimum hourly wage rate that will satisfy both the NC Department of Labor (NCDOL) and the Department.

Achieving or Failing to Meet Training Goals

The Contractor will be credited for each trainee employed by him on the contract work who is currently enrolled or becomes enrolled in an approved program and who receives training for at least 50 percent of the specific program requirement. Trainees will be allowed to be transferred between projects if required by the Contractor's scheduled workload to meet training goals.

If a contractor fails to attain their training assignments for the calendar year, they may be taken off the NCDOT's Bidders List.

Measurement and Payment

No compensation will be made for providing required training in accordance with these contract documents.

STANDARD SPECIAL PROVISION
MINIMUM WAGES
GENERAL DECISION NC150102 01/02/2015 NC102

Z-102

Date: January 2, 2015

General Decision Number: NC150102 01/02/2015 NC102

Superseded General Decision Numbers: NC20140102

State: North Carolina

Construction Type: HIGHWAY

COUNTIES:

Caswell	Lee	Richmond
Davidson	Montgomery	Rowan
Iredell	Moore	Stanly

HIGHWAY CONSTRUCTION PROJECTS (excluding tunnels, building structures in rest area projects & railroad construction; bascule, suspension & spandrel arch bridges designed for commercial navigation, bridges involving marine construction; and other major bridges).

Note: Executive Order (EO) 13658 establishes an hourly minimum wage of $10.10 for 2015 that applies to all contracts subject to the Davis-Bacon Act for which the solicitation is issued on or after January 1, 2015. If this contract is covered by the EO, the contractor must pay all workers in any classification listed on this wage determination at least $10.10 (or the applicable wage rate listed on this wage determination, if it is higher) for all hours spent performing on the contract. The EO minimum wage rate will be adjusted annually. Additional information on contractor requirements and worker protections under the EO is available at www.dol.gov/whd/govcontracts.

Modification Number	Publication Date
0	01/02/2015

SUNC2014-004 11/17/2014

	Rates	Fringes
BLASTER	21.85	
CARPENTER	13.98	
CEMENT MASON/CONCRETE FINISHER	13.67	
ELECTRICIAN		
Electrician	19.19	2.39
Telecommunications Technician	14.96	1.07
IRONWORKER	14.53	
LABORER		
Asphalt Raker and Spreader	11.75	
Asphalt Screed/Jackman	14.03	
Carpenter Tender	10.21	
Cement Mason/Concrete Finisher Tender	12.26	
Common or General	10.45	.13
Guardrail/Fence Installer	13.43	

	Rates	Fringes
Pipelayer	13.36	.43
Traffic Signal/Lighting Installer	16.29	
PAINTER		
Bridge	19.62	
POWER EQUIPMENT OPERATORS		
Asphalt Broom Tractor	12.14	
Bulldozer Fine	16.92	
Bulldozer Rough	15.58	
Concrete Grinder/Groover	25.00	
Crane Boom Trucks	14.83	
Crane Other	21.05	
Crane Rough/All-Terrain	21.25	
Drill Operator Rock	15.43	1.61
Drill Operator Structure	19.24	
Excavator Fine	16.09	1.52
Excavator Rough	14.07	.74
Grader/Blade Fine	19.40	
Grader/Blade Rough	15.48	
Loader 2 Cubic Yards or Less	12.67	1.52
Loader Greater Than 2 Cubic Yards	14.48	
Material Transfer Vehicle (Shuttle Buggy)	17.39	
Mechanic	18.86	
Milling Machine	16.26	
Off-Road Hauler/Water Tanker	12.90	
Oiler/Greaser	16.36	
Pavement Marking Equipment	11.63	
Paver Asphalt	15.07	
Roller Asphalt Breakdown	12.91	
Roller Asphalt Finish	13.67	
Roller Other	13.48	
Scraper Finish	13.59	
Scraper Rough	11.53	
Slip Form Machine	19.99	
Tack Truck/Distributor Operator	15.60	
TRUCK DRIVER		
GVWR of 26,000 Lbs or Greater	10.58	
GVWR of 26,000 Lbs or Less	13.50	.15

Welders – Receive rate prescribed for craft performing operation to which welding is incidental.

Unlisted classifications needed for work not included within the scope of the classifications listed may be added after award only as provided in the labor standards contract clauses (29 CFR 5.5(a)(1)(ii)).

The body of each wage determination lists the classification and wage rates that have been found to be prevailing for the cited type(s) of construction in the area covered by the wage determination. The classifications are listed in alphabetical order of "identifiers" that indicate whether the particular rate is a union rate (current union negotiated rate for local), a survey rate (weighted average rate) or a union average rate (weighted union average rate).

Union Rate Identifiers

A four letter classification abbreviation identifier enclosed in dotted lines beginning with characters other than "SU" or "UAVG" denotes that the union classification and rate were prevailing for that classification in the survey. Example: PLUM0198-005 07/01/2014. PLUM is an abbreviation identifier of the union which prevailed in the survey for this classification, which in this example would be Plumbers. 0198 indicates the local union number or district council number where applicable, i.e., Plumbers Local 0198. The next number, 005 in the example, is an internal number used in processing the wage determination. 07/01/2014 is the effective date of the most current negotiated rate, which in this example is July 1, 2014.

Union prevailing wage rates are updated to reflect all rate changes in the collective bargaining agreement (CBA) governing this classification and rate.

Survey Rate Identifiers

Classifications listed under the "SU" identifier indicate that no one rate prevailed for this classification in the survey and the published rate is derived by computing a weighted average rate based on all the rates reported in the survey for that classification. As this weighted average rate includes all rates reported in the survey, it may include both union and non-union rates. Example: SULA2012-007 5/13/2014. SU indicates the rates are survey rates based on a weighted average calculation of rates and are not majority rates. LA indicates the State of Louisiana. 2012 is the year of survey on which these classifications and rates are based. The next number, 007 in the example, is an internal number used in producing the wage determination. 5/13/2014 indicates the survey completion date for the classifications and rates under that identifier.

Survey wage rates are not updated and remain in effect until a new survey is conducted.

Union Average Rate Identifiers

Classification(s) listed under the UAVG identifier indicate that no single majority rate prevailed for those classifications; however, 100% of the data reported for the classifications was union data. EXAMPLE: UAVG-OH-0010 08/29/2014. UAVG indicates that the rate is a weighted union average rate. OH indicates the state. The next number, 0010 in the example, is an internal number used in producing the wage determination. 08/29/2014 indicates the survey completion date for the classifications and rates under that identifier.

A UAVG rate will be updated once a year, usually in January of each year, to reflect a weighted average of the current negotiated/CBA rate of the union locals from which the rate is based.

WAGE DETERMINATION APPEALS PROCESS

1.) Has there been an initial decision in the matter? This can be:

* an existing published wage determination
* a survey underlying a wage determination
* a Wage and Hour Division letter setting forth a position on a wage determination matter
* a conformance (additional classification and rate) ruling

On survey related matters, initial contact, including requests for summaries of surveys, should be with the Wage and Hour Regional Office for the area in which the survey was conducted because those Regional Offices have responsibility for the Davis-Bacon survey program. If the response from this initial contact is not satisfactory, then the process described in 2.) and 3.) should be followed.

With regard to any other matter not yet ripe for the formal process described here, initial contact should be with the Branch of Construction Wage Determinations. Write to:

Branch of Construction Wage Determinations
Wage and Hour Division
U. S. Department of Labor
200 Constitution Avenue, N.W.
Washington, D.C. 20210

2.) If the answer to the question in 1.) is yes, then an interested party (those affected by the action) can request review and reconsideration from the Wage and Hour Administrator (See 29 CFR Part 1.8 and 29 CFR Part 7). Write to:

Wage and Hour Administrator
U.S. Department of Labor
200 Constitution Avenue, N.W.
Washington, D.C. 20210

The request should be accompanied by a full statement of the interested party's position and by any information (wage payment data, project description, area practice material, etc.) that the requestor considers relevant to the issue.

3.) If the decision of the Administrator is not favorable, an interested party may appeal directly to the Administrative Review Board (formerly the Wage Appeals Board). Write to:

Administrative Review Board
U.S. Department of Labor
200 Constitution Avenue, N.W.
Washington, D.C. 20210

4.) All decisions by the Administrative Review Board are final.

END OF GENERAL DECISION

PROJECT SPECIAL PROVISIONS

GEOTECHNICAL

MSE RETAINING WALLS (LRFD) - (3/17/2015)	GT-1.1 - GT-1.11
PILES (LRFD) - (10/20/2015)	GT-2.1 - GT-2.2

DocuSigned by:
Geotechnical Engineering Unit
E06538624A11498...

8/10/2015

MECHANICALLY STABILIZED EARTH RETAINING WALLS (3-17-15)

1.0 GENERAL

Construct mechanically stabilized earth (MSE) retaining walls consisting of steel or geosynthetic reinforcement in the reinforced zone connected to vertical facing elements. Use precast concrete panels for vertical facing elements and coarse aggregate in the reinforced zone unless noted otherwise in the plans. Provide reinforced concrete coping as required. Design and construct MSE retaining walls based on actual elevations and wall dimensions in accordance with the contract and accepted submittals. Use a prequalified MSE Wall Installer to construct MSE retaining walls.

Define "reinforcement" as steel or geosynthetic reinforcement and "geosynthetics" as geosynthetic grids (geogrids) or strips (geostrips). Define "aggregate" as coarse or fine aggregate. Define "panel" as a precast concrete panel and "coping" as precast or cast-in-place concrete coping.

Define "MSE wall" as a mechanically stabilized earth retaining wall and "MSE Wall Vendor" as the vendor supplying the chosen MSE wall system. Define "MSE panel wall" as an MSE wall with panels and "MSE segmental wall" as an MSE wall with segmental retaining wall (SRW) units. Define "abutment wall" as an MSE wall with bridge foundations in any portion of the reinforced zone or an MSE wall connected to an abutment wall. Even if bridge foundations only penetrate a small part of the reinforced zone, the entire MSE wall is considered an abutment wall.

Use an approved MSE wall system in accordance with the plans and any NCDOT restrictions or exceptions for the chosen system. Value engineering proposals for other MSE wall systems will not be considered. Do not use MSE wall systems with an "approved for provisional use" status for abutment walls or MSE walls subject to scour, walls with design heights greater than 35 ft or walls supporting or adjacent to railroads or interstate highways. The list of approved MSE wall systems with approval status is available from:
connect.ncdot.gov/resources/Geological/Pages/Products.aspx

2.0 MATERIALS

Refer to the *Standard Specifications*.

Item	Section
Aggregate	1014
Anchor Pins	1056-2
Curing Agents	1026
Epoxy, Type 3A	1081
Geotextiles, Type 2	1056
Grout, Type 3	1003
Joint Materials	1028
Portland Cement Concrete, Class A	1000
Precast Retaining Wall Coping	1077

Reinforcing Steel	1070
Retaining Wall Panels	1077
Segmental Retaining Wall Units	1040-4
Shoulder Drain Materials	816-2
Wire Staples	1060-8(D)

Provide Type 2 geotextile for filtration and separation geotextiles. Use Class A concrete for cast-in-place coping, leveling concrete and pads.

Use panels and SRW units from producers approved by the Department and licensed by the MSE Wall Vendor. Unless required otherwise in the contract, produce panels with a smooth flat final finish that meets Article 1077-11 of the *Standard Specifications*. Accurately locate and secure reinforcement connectors in panels and maintain required concrete cover. Produce panels within 1/4" of the panel dimensions shown in the accepted submittals.

Damaged panels or SRW units with excessive discoloration, chips or cracks as determined by the Engineer will be rejected. Do not damage reinforcement connection devices or mechanisms in handling or storing panels and SRW units.

Store steel materials on blocking at least 12" above the ground and protect it at all times from damage; and when placing in the work make sure it is free from dirt, dust, loose mill scale, loose rust, paint, oil or other foreign materials. Handle and store geosynthetics in accordance with Article 1056-2 of the *Standard Specifications*. Load, transport, unload and store MSE wall materials so materials are kept clean and free of damage. Bent, damaged or defective materials will be rejected.

A. Aggregate

Use standard size No. 57, 57M, 67 or 78M that meets Table 1005-1 of the *Standard Specifications* for coarse aggregate except do not use No. 57 or 57M stone in the reinforced zone of MSE walls with geosynthetic reinforcement or connectors. Use the following for fine aggregate:

1. Standard size No. 1S, 2S, 2MS or 4S that meets Table 1005-2 of the *Standard Specifications* or
2. Gradation that meets Class III, Type 3 select material in accordance with Article 1016-3 of the *Standard Specifications*.

Fine aggregate is exempt from mortar strength in Subarticle 1014-1(E) of the *Standard Specifications*. Use fine aggregate with a maximum organic content of 1.0%. Provide aggregate with electrochemical properties that meet the following requirements:

AGGREGATE ELECTROCHEMICAL REQUIREMENTS					
Aggregate Type	**Reinforcement or Connector Material**	**pH**	**Resistivity**	**Chlorides**	**Sulfates**
Coarse	Steel	Not Required			

Fine	Steel	5 – 10	≥ 3,000 Ω · cm	≤ 100 ppm	≤ 200 ppm
Coarse or Fine	Polyester Type (PET) Geogrid	5 – 8	N/A*	N/A*	N/A*
Coarse or Fine	Geostrip or Polyolefin Geogrid	4.5 – 9	N/A*	N/A*	N/A*

* Resistivity, chlorides and sulfates are not applicable to geosynthetics.

Use aggregate from a source that meets the *Mechanically Stabilized Earth Wall Aggregate Sampling and Testing Procedures*. Perform pH tests for coarse aggregate in accordance with Materials and Tests (M&T) Unit Chemical Procedure C-Elec. Perform organic content tests for fine aggregate in accordance with AASHTO T 267 instead of Subarticle 1014-1(D) of the *Standard Specifications*. Perform electrochemical tests for fine aggregate in accordance with the following test procedures:

Property	**Test Method**
pH	AASHTO T 289
Resistivity	AASHTO T 288
Chlorides	AASHTO T 291
Sulfates	AASHTO T 290

B. Reinforcement

Provide steel or geosynthetic reinforcement supplied by the MSE Wall Vendor or a manufacturer approved or licensed by the vendor. Use reinforcement approved for the chosen MSE wall system. The list of approved reinforcement for each MSE wall system is available from the website shown elsewhere in this provision.

1. Steel Reinforcement

Provide Type 1 material certifications in accordance with Article 106-3 of the *Standard Specifications* for steel reinforcement. Use welded wire grid reinforcement (“mesh”, “mats” and “ladders”) that meet Article 1070-3 of the *Standard Specifications* and metallic strip reinforcement (“straps”) that meet ASTM A572 or A1011. Galvanize steel reinforcement in accordance with Section 1076 of the *Standard Specifications*.

2. Geosynthetic Reinforcement

Define “machine direction” (MD) for geosynthetics in accordance with ASTM D4439. Provide Type 1 material certifications for geosynthetic strengths in the MD in accordance with Article 1056-3 of the *Standard Specifications*. Test geosynthetics in accordance with ASTM D6637.

C. Bearing Pads

For MSE panel walls, use bearing pads that meet Section 3.6.1.a of the *FHWA Design*

and Construction of Mechanically Stabilized Earth Walls and Reinforced Soil Slopes – Volume I (Publication No. FHWA-NHI-10-024). Provide bearing pads with thicknesses that meet the following:

BEARING PAD THICKNESS	
Facing Area per Panel (A)	**Minimum Pad Thickness After Compression (based on 2 times panel weight above pads)**
A ≤ 30 sf	1/2"
30 sf < A ≤ 75 sf	3/4"

D. Miscellaneous Components

Miscellaneous components may include connectors (e.g., anchors, bars, clamps, pins, plates, ties, etc.), fasteners (e.g., bolts, nuts, washers, etc.) and any other MSE wall components not included above. Galvanize steel components in accordance with Section 1076 of the *Standard Specifications*. Provide miscellaneous components approved for the chosen MSE wall system. The list of approved miscellaneous components for each MSE wall system is available from the website shown elsewhere in this provision.

3.0 PRECONSTRUCTION REQUIREMENTS

A. MSE Wall Surveys

The Retaining Wall Plans show a plan view, typical sections, details, notes and an elevation or profile view (wall envelope) for each MSE wall. Before beginning MSE wall design, survey existing ground elevations shown in the plans and other elevations in the vicinity of MSE wall locations as needed. For proposed slopes above or below MSE walls, survey existing ground elevations to at least 10 ft beyond slope stake points. Based on these elevations, finished grades and actual MSE wall dimensions and details, submit revised wall envelopes for acceptance. Use accepted wall envelopes for design.

B. MSE Wall Designs

For MSE wall designs, submit 11 copies of working drawings and 3 copies of design calculations and a PDF copy of each at least 30 days before the preconstruction meeting. Note name and NCDOT ID number of the panel or SRW unit production facility on the working drawings. Do not begin MSE wall construction until a design submittal is accepted.

Use a prequalified MSE Wall Design Consultant to design MSE walls. Provide designs sealed by a Design Engineer approved as a Geotechnical Engineer (key person) for the MSE Wall Design Consultant.

Design MSE walls in accordance with the plans, *AASHTO LRFD Bridge Design Specifications* and any NCDOT restrictions for the chosen MSE wall system unless

otherwise required. Design MSE walls for seismic if walls are located in seismic zone 2 based on Figure 2-1 of the *Structure Design Manual*. Use a uniform reinforcement length throughout the wall height of at least 0.7H with H as shown in the plans or 6 ft, whichever is longer, unless noted otherwise in the plans. Extend the reinforced zone at least 6" beyond end of reinforcement. Do not locate drains, the reinforced zone or leveling pads outside right-of-way or easement limits.

Use the simplified method for determining maximum reinforcement loads and design parameters approved for the chosen MSE wall system or default values in accordance with the AASHTO LRFD specifications. Design steel components including reinforcement and connectors for the design life noted in the plans and aggregate type in the reinforced zone. Use corrosion loss rates for galvanizing in accordance with the AASHTO LRFD specifications for nonaggressive backfill and carbon steel corrosion rates in accordance with the following:

CARBON STEEL CORROSION RATES	
Aggregate Type (in reinforced zone)	**Corrosion Loss Rate (after zinc depletion)**
Coarse	0.47 mil/year
Fine (except abutment walls)	0.58 mil/year
Fine (abutment walls)	0.70 mil/year

For geosynthetic reinforcement and connectors, use approved geosynthetic properties for the design life noted in the plans and aggregate type in the reinforced zone.

When noted in the plans, design MSE walls for a live load (traffic) surcharge of 250 lb/sf in accordance with Figure C11.5.6-3(b) of the AASHTO LRFD specifications. For steel beam guardrail with 8 ft posts or concrete barrier rail above MSE walls, analyze top 2 reinforcement layers for traffic impact loads in accordance with Section 7.2 of the FHWA MSE wall manual shown elsewhere in this provision except use the following for geosynthetic reinforcement rupture:

$$\phi\, T_{al}\, R_c \geq T_{max} + (T_I / RF_{CR})$$

Where,

ϕ = resistance factor for tensile resistance in accordance with Section 7.2.1 of the FHWA MSE wall manual,

T_{al} = long-term geosynthetic design strength approved for chosen MSE wall system,

R_c = reinforcement coverage ratio = 1 for continuous geosynthetic reinforcement,

T_{max} = factored static load in accordance with Section 7.2 of the FHWA MSE wall manual,

T_I = factored impact load in accordance with Section 7.2 of the FHWA MSE wall manual and

RF_{CR} = creep reduction factor approved for chosen MSE wall system.

If existing or future obstructions such as foundations, guardrail, fence or handrail posts, moment slabs, pavements, pipes, inlets or utilities will interfere with reinforcement,

maintain a clearance of at least 3" between obstructions and reinforcement unless otherwise approved. Locate reinforcement layers so all of reinforcement length is within 3" of corresponding connection elevations.

Use 6" thick cast-in-place unreinforced concrete leveling pads beneath panels and SRW units that are continuous at steps and extend at least 6" in front of and behind bottom row of panels or SRW units. Unless required otherwise in the plans, embed top of leveling pads in accordance with the following requirements:

EMBEDMENT REQUIREMENTS		
Front Slope[1] (H:V)	**Minimum Embedment Depth[2] (whichever is greater)**	
6:1 or flatter (except abutment walls)	H/20	1 ft for H ≤ 10 ft 2 ft for H > 10 ft
6:1 or flatter (abutment walls)	H/10	2 ft
> 6:1 to < 3:1	H/10	2 ft
3:1 to 2:1	H/7	2 ft

1. Front slope is as shown in the plans.
2. Define "H" as the maximum design height plus embedment per wall with the design height and embedment as shown in the plans.

When noted in the plans, locate a continuous aggregate shoulder drain along the base of the reinforced zone behind the aggregate. Provide wall drainage systems consisting of drains and outlet components in accordance with Standard Drawing No. 816.02 of the *Roadway Standard Drawings*.

For MSE panel walls, cover joints at back of panels with filtration geotextiles at least 12" wide. If the approval of the chosen MSE wall system does not require a minimum number of bearing pads, provide the number of pads in accordance with the following:

NUMBER OF BEARING PADS		
Facing Area per Panel (A)	**Maximum Wall Height Above Horizontal Panel Joint**	**Minimum Number of Pads per Horizontal Panel Joint**
A ≤ 30 sf	25 ft	2
	35 ft[1]	3
30 sf < A ≤ 75 sf	25 ft	3
	35 ft[1]	4

1. Additional bearing pads per horizontal panel joint may be required for wall heights above joints greater than 35 ft.

For MSE segmental walls, coarse aggregate is required in any SRW unit core spaces and between and behind SRW units for a horizontal distance of at least 18". Separation geotextiles are required between the aggregate and overlying fill or pavement sections except when concrete pavement, full depth asphalt or cement treated base is placed

directly on aggregate. When noted in the plans, separation geotextiles are also required at the back of the reinforced zone between the aggregate and backfill or natural ground. Unless required otherwise in the plans, use reinforced concrete coping at top of walls that meets the following requirements:

1. Coping dimensions as shown in the plans,
2. At the Contractor's option, coping that is precast or cast-in-place concrete for MSE panel walls unless cast-in-place coping is required as shown in the plans,
3. Cast-in-place concrete coping for MSE segmental walls and
4. At the Contractor's option and when shown in the plans, cast-in-place concrete coping that extends down back of panels or SRW units or connects to panels or SRW units with dowels.

For MSE segmental walls with dowels, attach dowels to top courses of SRW units in accordance with the following:

1. Set dowels in core spaces of SRW units filled with grout instead of coarse aggregate or
2. Embed adhesively anchored dowels in holes of solid SRW units with epoxy.

For MSE panel walls with coping, connect cast-in-place concrete coping or leveling concrete for precast concrete coping to top row of panels with dowels cast into panels. When concrete barrier rail is required above MSE walls, use concrete barrier rail with moment slab as shown in the plans.

Submit working drawings and design calculations for acceptance in accordance with Article 105-2 of the *Standard Specifications*. Submit working drawings showing plan views, wall profiles with foundation pressures, typical sections with reinforcement and connection details, aggregate locations and types, geotextile locations and details of leveling pads, panels or SRW units, coping, bin walls, slip joints, etc. If necessary, include details on working drawings for concrete barrier rail with moment slab, reinforcement splices if allowed for the chosen MSE wall system, reinforcement connected to end bent caps and obstructions extending through walls or interfering with reinforcement, leveling pads, barriers or moment slabs. Submit design calculations for each wall section with different surcharge loads, geometry or material parameters. At least one analysis is required for each wall section with different reinforcement lengths. When designing MSE walls with computer software other than MSEW, use MSEW, version 3.0 with update 14.93 or later, manufactured by ADAMA Engineering, Inc. to verify the design. At least one MSEW analysis is required per 100 ft of wall length with at least one analysis for the wall section with the longest reinforcement. Submit electronic MSEW input files and PDF output files with design calculations.

C. Preconstruction Meeting

Before starting MSE wall construction, hold a preconstruction meeting to discuss the construction and inspection of the MSE walls. If this meeting occurs before all MSE wall submittals have been accepted, additional preconstruction meetings may be

required before beginning construction of MSE walls without accepted submittals. The Resident or Bridge Maintenance Engineer, Bridge Construction Engineer, Geotechnical Operations Engineer, Contractor and MSE Wall Installer Superintendent will attend preconstruction meetings.

4.0 CORROSION MONITORING

Corrosion monitoring is required for MSE walls with steel reinforcement. The Engineer will determine the number of monitoring locations and where to install the instrumentation. Contact M&T before beginning wall construction. M&T will provide the corrosion monitoring instrumentation kits and if necessary, assistance with installation.

5.0 SITE ASSISTANCE

Unless otherwise approved, provide an MSE Wall Vendor representative to assist and guide the MSE Wall Installer on-site for at least 8 hours when the first panels or SRW units and reinforcement layer are placed. If problems are encountered during construction, the Engineer may require the vendor representative to return to the site for a time period determined by the Engineer.

6.0 CONSTRUCTION METHODS

Control drainage during construction in the vicinity of MSE walls. Direct run off away from MSE walls, aggregate and backfill. Contain and maintain aggregate and backfill and protect material from erosion.

Excavate as necessary for MSE walls in accordance with the accepted submittals. If applicable and at the Contractor's option, use temporary shoring for wall construction instead of temporary slopes to construct MSE walls. Define "temporary shoring for wall construction" as temporary shoring not shown in the plans or required by the Engineer including shoring for OSHA reasons or the Contractor's convenience.

Unless required otherwise in the plans, install foundations located in the reinforced zone before placing aggregate or reinforcement. Brace piles in the reinforced zone to maintain alignment when placing and compacting aggregate. Secure piles together with steel members near top of piles. Clamp members to piles instead of welding if bracing is at or below pile cut-off elevations.

Notify the Engineer when foundation excavation is complete. Do not place leveling pad concrete, aggregate or reinforcement until excavation dimensions and foundation material are approved.

Construct cast-in-place concrete leveling pads at elevations and with dimensions shown in the accepted submittals and in accordance with Section 420 of the *Standard Specifications*. Cure leveling pads at least 24 hours before placing panels or SRW units.

Erect and support panels and stack SRW units so the final wall position is as shown in the accepted submittals. Stagger SRW units to create a running bond by centering SRW units

over joints in the row below as shown in the accepted submittals. Space bearing pads in horizontal panel joints as shown in the accepted submittals and cover all panel joints with filtration geotextiles as shown in the accepted submittals. Attach filtration geotextiles to back of panels with adhesives, tapes or other approved methods.

Construct MSE walls with the following tolerances:

A. SRW units are level from front to back and between units when checked with a 4 ft long level,

B. Vertical joint widths are 1/4" maximum for SRW units and 3/4", ±1/4" for panels,

C. Final wall face is within 3/4" of horizontal and vertical alignment shown in the accepted submittals when measured along a 10 ft straightedge and

D. Final wall plumbness (batter) is not negative (wall face leaning forward) and within 0.5° of vertical unless otherwise approved.

Place reinforcement at locations and elevations shown in the accepted submittals and within 3" of corresponding connection elevations. Install reinforcement with the direction shown in the accepted submittals. Place reinforcement in slight tension free of kinks, folds, wrinkles or creases. Reinforcement may be spliced once per reinforcement length if shown in the accepted submittals. Use reinforcement pieces at least 6 ft long. Contact the Engineer when unanticipated existing or future obstructions such as foundations, guardrail, fence or handrail posts, pavements, pipes, inlets or utilities will interfere with reinforcement. To avoid obstructions, deflect, skew or modify reinforcement as shown in the accepted submittals.

Place aggregate in the reinforced zone in 8" to 10" thick lifts. Compact fine aggregate in accordance with Subarticle 235-3(C) of the *Standard Specifications*. Use only hand operated compaction equipment to compact aggregate within 3 ft of panels or SRW units. At a distance greater than 3 ft, compact aggregate with at least 4 passes of an 8 ton to 10 ton vibratory roller in a direction parallel to the wall face. Smooth wheeled or rubber tired rollers are also acceptable for compacting aggregate. Do not use sheepsfoot, grid rollers or other types of compaction equipment with feet. Do not displace or damage reinforcement when placing and compacting aggregate. End dumping directly on geosynthetics is not permitted. Do not operate heavy equipment on reinforcement until it is covered with at least 8" of aggregate. Replace any damaged reinforcement to the satisfaction of the Engineer.

Backfill for MSE walls outside the reinforced zone in accordance with Article 410-8 of the *Standard Specifications*. If a drain is required, install wall drainage systems as shown in the accepted submittals and in accordance with Section 816 of the *Standard Specifications*.

Install dowels as necessary for SRW units and place and construct coping and leveling concrete as shown in the accepted submittals. Construct leveling concrete in accordance with Section 420 of the *Standard Specifications*. Construct cast-in-place concrete coping in accordance with Subarticle 452-3(C) of the *Standard Specifications*. When single faced precast concrete barrier is required in front of and against MSE walls, stop coping just

above barrier so coping does not interfere with placing barrier up against wall faces.

When separation geotextiles are required, overlap adjacent geotextiles at least 18" and hold separation geotextiles in place with wire staples or anchor pins as needed. Seal joints above and behind MSE walls between coping and concrete slope protection with silicone sealant.

7.0 MEASUREMENT AND PAYMENT

MSE Retaining Wall No. __ will be measured and paid in square feet. MSE walls will be measured as the square feet of wall face area with the pay height equal to the difference between top of wall and top of leveling pad elevations. Define "top of wall" as top of coping or top of panels or SRW units for MSE walls without coping.

The contract unit price for *MSE Retaining Wall No.* __ will be full compensation for providing designs, submittals, labor, tools, equipment and MSE wall materials, excavating, backfilling, hauling and removing excavated materials and supplying site assistance, leveling pads, panels, SRW units, reinforcement, aggregate, wall drainage systems, geotextiles, bearing pads, coping, miscellaneous components and any incidentals necessary to construct MSE walls. The contract unit price for *MSE Retaining Wall No.* __ will also be full compensation for reinforcement connected to and aggregate behind end bent caps in the reinforced zone, if required.

No separate payment will be made for temporary shoring for wall construction. Temporary shoring for wall construction will be incidental to the contract unit price for *MSE Retaining Wall No.* __.

The contract unit price for *MSE Retaining Wall No.* __ does not include the cost for ditches, fences, handrails, barrier or guardrail associated with MSE walls as these items will be paid for elsewhere in the contract.

Where it is necessary to provide backfill material behind the reinforced zone from sources other than excavated areas or borrow sources used in connection with other work in the contract, payment for furnishing and hauling such backfill material will be paid as extra work in accordance with Article 104-7 of the *Standard Specifications*. Placing and compacting such backfill material is not considered extra work but is incidental to the work being performed.

Payment will be made under:

Pay Item	**Pay Unit**
MSE Retaining Wall No. __	Square Foot

NORTH CAROLINA PROFESSIONAL SEAL 022246 ENGINEER SCOTT A. HIDDEN

DocuSigned by:
Scott A. Hidden
F760CAEB96FC4D3...

8/10/2015

PILES **(10-20-15)**

Revise the *2012 Standard Specifications* as follows:

Page 4-70, Article 450-2, Materials, line 2, in the materials table, replace "Neat Cement Grout, Nonshrink" with "Neat Cement Grout, Type 1".

Page 4-70, Article 450-2, Materials, line 8, in the last sentence of the second paragraph, replace "approved by the Materials and Tests Unit." with "that are on the NCDOT Approved Products List."

Page 4-72, Subarticle 450-3(D)(3), Required Driving Resistance, lines 26-30, replace first paragraph with the following:

The Engineer will determine if the proposed pile driving methods and equipment are acceptable and provide the blows/ft and equivalent set for the required driving resistance noted in the plans, i.e., "pile driving criteria" except for structures with pile driving analyzer (PDA) testing. For structures with PDA testing, provide pile driving criteria for any bents and end bents with piles in accordance with Subarticle 450-3(F)(4).

Page 4-73, Subarticle 450-3(E)(1), Pile Excavation, lines 19-20, in the third sentence of the second paragraph, replace "use smooth or corrugated clean watertight steel casings" with "use smooth non-corrugated clean watertight steel casings".

Page 4-73, Subarticle 450-3(F), Pile Driving Analyzer, lines 45-48, replace third paragraph with the following:

The Engineer will complete the review of the proposed pile driving methods and equipment within 7 days of receiving PDA reports and pile driving criteria. Do not place concrete for caps or footings on piles until PDA reports and pile driving criteria have been accepted.

Page 4-75, Subarticle 450-3(F), Pile Driving Analyzer, line 21, add the following to the end of Article 450-3:

(4) Pile Driving Criteria

Analyze pile driving with the GRL Wave Equation Analysis Program (GRLWEAP) manufactured by Pile Dynamics, Inc. Use the same PDA Consultant that provides PDA reports to perform GRLWEAP analyses and develop pile driving criteria. Provide driving criteria sealed by an engineer approved as a Project Engineer (key person) for the same PDA Consultant.

Analyze pile driving so driving stresses, energy transfer, ram stroke and blows/ft from PDA testing and resistances from CAPWAP analyses correlate to GRLWEAP models. Provide pile driving criteria for each combination of required driving resistance and pile length installed for all pile types and sizes. Submit 2 copies of pile driving criteria with

PDA reports. Include the following for driving criteria:

(a) Project information in accordance with Subarticle 450-3(F)(3)(a)
(b) Table showing blows/ft and equivalent set vs. either stroke for multiple strokes in increments of 6" or bounce chamber pressure for multiple pressures in increments of 1 psi
(c) Maximum stroke or blows/ft or pile cushion requirements to prevent overstressing piles as needed
(d) GRLWEAP software version information
(e) PDF copy of all pile driving criteria and executable GRLWEAP input and output files

Page 4-76, Article 450-4, Measurement and Payment, lines 27-29, replace third sentence of the sixth paragraph with the following:

The contract unit price for *PDA Testing* will be full compensation for performing PDA testing the first time a pile is tested, performing CAPWAP analysis on data collected during initial drive, restrikes and redrives, providing PDA reports, performing GRLWEAP analysis and developing and providing pile driving criteria.

DocuSigned by:
Scott A. Hidden
F760CAEB96FC4D3...

8/10/2015

PROJECT SPECIAL PROVISIONS
GEOENVIRONMENTAL

CONTAMINATED SOIL (8/26/2015)

The Contractor's attention is directed to the fact that soil contaminated with petroleum hydrocarbon compounds exist within the project area. The known areas of contamination are indicated on corresponding plans sheets. Information relating to these contaminated areas, sample locations, and investigation reports will be available at the following web address by navigating to the correct letting year and month then selecting, "Plans and Proposals", "Davidson B-3159", "GeoEnv Postings":

http://dotw-xfer01.dot.state.nc.us/dsplan/

Petroleum contaminated soil may be encountered during any earthwork activities on the project. The Contractor shall only excavate those soils that the Engineer designates necessary to complete a particular task. The Engineer shall determine if soil is contaminated based on petroleum odors and unusual soil staining. Contaminated soil not required to be excavated is to remain in place and undisturbed. Undisturbed soil shall remain in place, whether contaminated or not. The Contractor shall transport all contaminated soil excavated from the project to a facility licensed to accept contaminated soil.

In the event that the Contractor chooses to stockpile the soil temporarily, the stockpile shall be created within the property boundaries of the source material and in accordance with the Stockpile Detail found in the plans. If the volume of contaminated material exceeds available space on site, the Contractor shall obtain a permit from the NCDENR UST Section's Regional Office for off-site temporary storage. Stockpiling contaminated soil will be incidental to the project. The Contractor shall provide disposal manifests and weigh tickets to the Engineer for review and approval. The Engineer will in turn provide the GeoEnvironmental Section with a copy of the disposal manifests and weigh tickets for their records.

Measurement and Payment:

The quantity of contaminated soil hauled, and disposed of shall be the actual number of tons of material, which has been acceptably transported and weighed with certified scales as documented by disposal manifests and weigh tickets. The quantity of contaminated soil, measured as provided above, shall be paid for at the contract unit price per ton for "Hauling and Disposal of Petroleum Contaminated Soil".

The above price and payment shall be full compensation for all work covered by this section, including, but not limited to loading, transportation, weighing, laboratory testing, disposal, equipment, decontamination of equipment, labor, and personal protective equipment.

DocuSigned by:
Cyrus Parker
C96492AF5E824DF...
8/26/2015

NORTH CAROLINA PROFESSIONAL SEAL 031499 ENGINEER Cyrus F. Parker

Payment shall be made under:

Pay Item	Pay Unit
Hauling and Disposal of Petroleum Contaminated Soil	Ton

TC-1

B-3159 Davidson County

WORK ZONE TRAFFIC CONTROL
Project Special Provisions

Law Enforcement:
(05/14/2013)

Description

Furnish Law Enforcement Officers and marked Law Enforcement vehicles to direct traffic in accordance with the contract.

Construction Methods

Use uniformed Law Enforcement Officers and marked Law Enforcement vehicles equipped with blue lights mounted on top of the vehicle, and Law Enforcement vehicle emblems to direct or control traffic as required by the plans or by the Engineer.

Measurement and Payment

Law Enforcement will be measured and paid for in the actual number of hours that each Law Enforcement Officer is provided during the life of the project as approved by the Engineer. There will be no direct payment for marked Law Enforcement vehicles as they are considered incidental to the pay item.

Payment will be made under:

Pay Item	**Pay Unit**
Law Enforcement	Hour

DocuSigned by:
David Bissette
ECDC908C875348C...
7/7/2015

PROJECT SPECIAL PROVISIONS
LIGHTING

1.00 DESCRIPTION

The work covered by this Section consists of furnishing, installing, connecting, Electrical Conduit Systems for future roadway lighting at locations shown on the plans. Perform all work in accordance with these Special Provisions, the Plans, the National Electrical Code, and North Carolina Department of Transportation "Standard Specifications for Roads and Structures" (*2012 Standard Specifications*). Install all bore pits outside the clear zone, as defined in the AASHTO Roadside Design Guide or as directed by the Engineer.

In addition to the requirements of Division 1400, other specific Sections of the *2012 Standard Specifications* applicable to the work on this project are listed below.

Section 1409	Electrical Duct
Section 1411	Electrical Junction Boxes

2.00 ELECTRICAL JUNCTION BOXES

2.10 DESCRIPTION

Same as Section 1411-1.

2.20 MATERIALS

Same as Section 1411-2, except modify referenced Section 1091-5 as follows:

- Page 10-202, revise paragraph starting on line 9 to read “Provide polymer concrete (PC) boxes which have bolted covers and open bottoms. Provide vertical extensions of 6" to 12" as required by project special provisions.”
- Page 10-202, revise sentence beginning on line 14 to read “Other thermoplastic materials may be used for components which are not normally exposed to sunlight.”

2.30 CONSTRUCTION METHODS

Same as Section 1411-3.

2.40 MEASUREMENT AND PAYMENT

Same as Section 1411-4.

NORTH CAROLINA PROFESSIONAL SEAL 022582 ENGINEER PAUL KI-BUN CHAN

DocuSigned by:
Paul Chan
F83C4985EEEF4A2...
7/9/2015

PROJECT SPECIAL PROVISIONS
Utility Construction

HINDE ENGINEERING
License No. C-2639
401 Harrison Oaks Blvd.
Suite 145
Cary, NC 27513
(919) 653-0001

NORTH CAROLINA PROFESSIONAL SEAL 040370 ENGINEER CLINT L. STEVENS
Docusigned by:
Clint L. Stevens
9D6F32D777EB42D...
7/6/15

Revise the 2012 Standard Specifications as follows:

Page 10-58, Sub-article 1036-1 General
add the following sentence

All materials in contact with potable water shall be in conformance with Section 1417 of the Safe Drinking Water Act.

Page 15-1, Sub-article 1500-2 Cooperation with the Utility Owner, paragraph 2:
add the following sentences:

Water facilities and sewer facilities are owned by the City of Lexington Public Works Department. The contact person for the City of Lexington Public Works Department is Mr. Roger Jones, PE; he can be reached by phone at (336) 240-1952.

Notify the City of Lexington Public Works Department at least one week prior to commencement of water and/or sewer utility work.

Page 15-2, Sub-article 1500-9 Placing Pipelines into Service
add the following sentence:

Obtain approval from the NCDENR-Public Water Supply Section prior to placing a new water line into service. Use backflow prevention assemblies for temporary connections to isolate new water lines from existing water line.

Page 15-6, Sub-article 1510-3 (B), Testing and Sterilization
change the allowable leakage formula to:

$$\boldsymbol{W = LD\sqrt{P} \div 148,000}$$

PROJECT SPECIAL PROVISIONS
Utility Construction

Page 15-6, Sub-article 1510-3 (B), Testing and Sterilization, sixth paragraph:
Replace the paragraph with the following:

Sterilize water lines in accordance with Section 1003 of The Rules Governing Public Water supply and AWWA C651 Section 4.4.3, the Continuous Feed Method. Provide a chlorine solution with between 50 parts per million and 100 parts per million in the initial feed. If the chlorine level drops below 10 parts per million during a 24 hour period, then flush, refill with fresh chlorine solution, and repeat for 24 hours. Provide certified bacteriological and contaminant test results from a state-approved or state-certified laboratory. Operate all valves and controls to assure thorough sterilization.

Page 15-6, Sub-article 1510-3 (B), Testing and Sterilization, seventh paragraph:
delete the words "may be performed concurrently or consecutively."
and replace with "shall be performed consecutively."

Page 15-7, sub-article 1515-2 Materials,
replace paragraph beginning "Double check valves…" with the following:

Double Check valves (DCV) and Reduced Pressure Zone principal (RPZ) backflow prevention assemblies shall be listed on the University of Southern California Foundation for Cross-Connection Control and Hydraulic Research list of approved backflow devices.

Page 15-11, Sub-article 1520-3(A)(2) Testing, line 5,
replace the second paragraph with the following:

Test all 24" and smaller gravity sewer lines for leakage using infiltration, exfiltration, or air test. Perform visual inspection on gravity sewer lines larger than 24". Perform line and grade testing and deflection testing on all gravity sewer lines.

1. FLOWABLE FILL

This work shall consist of furnishing and placing ready-mixed or volumetric mixed excavatable flowable fill between the top of existing water and sewer mains and the bottom of the proposed drainage pipes as specified in the plans or as directed by the Engineer.

Backfill shall not be placed on the excavatable flowable fill prior to final set or hardening as determined by the Engineer. The excavatable flowable fill materials shall meet the requirements of Section 1000-6.

The quantity of excavatable flowable fill placed in accordance with the plans and provisions herein and accepted, will be measured and paid for at the contract unit price per cubic yard for "Flowable Fill." Such price and payments will be full compensation for all labor, materials, backfilling, and incidentals necessary to complete the work as required.

PROJECT SPECIAL PROVISIONS
Utilities by Others

General:

The following utility companies have facilities that will be in conflict with the construction of this project:

A. Power – City of Lexington (Transmission & Distribution)
B. Telecommunications – Windstream
C. Gas – City of Lexington
D. Sewer – City of Lexington
E. Cable – Time Warner Cable

The conflicting facilities of these concerns will be adjusted prior to the date of availability, unless otherwise noted and are therefore listed in these special provisions for the benefit of the Contractor. All utility work listed herein will be done by the utility owners. All utilities are shown on the plans from the best available information.

The Contractor's attention is directed to Article 105.8 of the Standard Specifications.

Utilities Requiring Adjustment:

A. City of Lexington (Transmission & Distribution) - Power

1. See Utilities by Others plans for utility conflicts.
2. The Contact for the City of Lexington is Jeremy Furr and he may be reached at 704.701.3188.
3. Facilities to be relocated by May 16, 2016.

B. Windstream - Telecommunications

1. See Utilities by Others plans for utility conflicts.
2. The Contact for Windstream will be Michael Smith and he may be reached at 336.249.5845.
3. Facilities to be relocated by October 30, 2016.

C. City of Lexington - Gas

1. See Utilities by Others plans for utility conflicts.
2. The Contact for the City of Lexington is Andy Thomas and he may be reached at 336.248.3945.
3. Facilities to be relocated by April 29, 2016.
4. City of Lexington Gas will need a 4 week notice prior to completion of rough grading and will require 4 weeks to complete the relocation along piedmont drive, then thru the auto dealership to tie in at the valve in front of McDonalds.

PROJECT SPECIAL PROVISIONS
Utilities by Others

D. City of Lexington – Sewer

1. See Utilities by Others plans for utility conflicts.
2. The Contact for the City of Lexington is Roger Jones and he may be reached at 336.248.3930.
3. Sewer line crossing -Y- (I-85 Business) at Station 39+10 will be completed by July 1, 2016.
4. All other sewer utility relocation work will be done as shown on the utility construction plans.

E. Time Warner Cable - CATV

1. See Utilities by Others plans for utility conflicts.
2. The Contact for TWC is Eric Vivod and he may be reached at 336.231.6109.
3. Facilities will be relocated by July 29, 2016. Work cannot begin though until after the City of Lexington Power notifies them that they can begin work.

Project Special Provisions
Erosion Control

STABILIZATION REQUIREMENTS:

Stabilization for this project shall comply with the time frame guidelines as specified by the NCG-010000 general construction permit effective August 3, 2011 issued by the North Carolina Department of Environment and Natural Resources Division of Water Quality. Temporary or permanent ground cover stabilization shall occur within 7 calendar days from the last land-disturbing activity, with the following exceptions in which temporary or permanent ground cover shall be provided in 14 calendar days from the last land-disturbing activity:

- Slopes between 2:1 and 3:1, with a slope length of 10 ft. or less
- Slopes 3:1 or flatter, with a slope of length of 50 ft. or less
- Slopes 4:1 or flatter

The stabilization timeframe for High Quality Water (HQW) Zones shall be 7 calendar days with no exceptions for slope grades or lengths. High Quality Water Zones (HQW) Zones are defined by North Carolina Administrative Code 15A NCAC 04A.0105 (25). Temporary and permanent ground cover stabilization shall be achieved in accordance with the provisions in this contract and as directed.

SEEDING AND MULCHING: (West)

The kinds of seed and fertilizer, and the rates of application of seed, fertilizer, and limestone, shall be as stated below. During periods of overlapping dates, the kind of seed to be used shall be determined. All rates are in pounds per acre.

Shoulder and Median Areas

August 1 - June 1		**May 1 - September 1**	
20#	Kentucky Bluegrass	20#	Kentucky Bluegrass
75#	Hard Fescue	75#	Hard Fescue
25#	Rye Grain	10#	German or Browntop Millet
500#	Fertilizer	500#	Fertilizer
4000#	Limestone	4000#	Limestone

Areas Beyond the Mowing Pattern, Waste and Borrow Areas:

August 1 - June 1		**May 1 - September 1**	
100#	Tall Fescue	100#	Tall Fescue
15#	Kentucky Bluegrass	15#	Kentucky Bluegrass
30#	Hard Fescue	30#	Hard Fescue
25#	Rye Grain	10#	German or Browntop Millet
500#	Fertilizer	500#	Fertilizer
4000#	Limestone	4000#	Limestone

Approved Tall Fescue Cultivars

06 Dust	Escalade	Justice	Scorpion
2nd Millennium	Essential	Kalahari	Serengeti
3rd Millennium	Evergreen 2	Kentucky 31*	Shelby
Apache III	Falcon IV	Kitty Hawk 2000	Sheridan
Avenger	Falcon NG	Legitimate	Signia
Barlexas	Falcon V	Lexington	Silver Hawk
Barlexas II	Faith	LSD	Sliverstar
Bar Fa	Fat Cat	Magellan	Shenandoah Elite
Barrera	Festnova	Matador	Sidewinder
Barrington	Fidelity	Millennium SRP	Skyline
Barrobusto	Finelawn Elite	Monet	Solara
Barvado	Finelawn Xpress	Mustang 4	Southern Choice II
Biltmore	Finesse II	Ninja 2	Speedway
Bingo	Firebird	Ol' Glory	Spyder LS
Bizem	Firecracker LS	Olympic Gold	Sunset Gold
Blackwatch	Firenza	Padre	Taccoa
Blade Runner II	Five Point	Patagonia	Tanzania
Bonsai	Focus	Pedigree	Trio
Braveheart	Forte	Picasso	Tahoe II
Bravo	Garrison	Piedmont	Talladega
Bullseye	Gazelle II	Plantation	Tarheel
Cannavaro	Gold Medallion	Proseeds 5301	Terrano
Catalyst	Grande 3	Prospect	Titan ltd
Cayenne	Greenbrooks	Pure Gold	Titanium LS
Cessane Rz	Greenkeeper	Quest	Tracer
Chipper	Gremlin	Raptor II	Traverse SRP
Cochise IV	Greystone	Rebel Exeda	Tulsa Time
Constitution	Guardian 21	Rebel Sentry	Turbo
Corgi	Guardian 41	Rebel IV	Turbo RZ
Corona	Hemi	Regiment II	Tuxedo RZ
Coyote	Honky Tonk	Regenerate	Ultimate
Darlington	Hot Rod	Rendition	Venture
Davinci	Hunter	Rhambler 2 SRP	Umbrella
Desire	Inferno	Rembrandt	Van Gogh
Dominion	Innovator	Reunion	Watchdog
Dynamic	Integrity	Riverside	Wolfpack II
Dynasty	Jaguar 3	RNP	Xtremegreen
Endeavor	Jamboree	Rocket	

***Note: Kentucky 31 will no longer be an approved NCDOT Tall Fescue Cultivar after December 31, 2015.**

Approved Kentucky Bluegrass Cultivars:

4-Season	Blue Velvet	Gladstone	Quantum Leap
Alexa II	Blueberry	Granite	Rambo
America	Boomerang	Hampton	Rhapsody
Apollo	Brilliant	Harmonie	Rhythm
Arcadia	Cabernet	Impact	Rita
Aries	Champagne	Jefferson	Royce
Armada	Champlain	Juliet	Rubicon
Arrow	Chicago II	Jump Start	Rugby II
Arrowhead	Corsair	Keeneland	Shiraz
Aura	Courtyard	Langara	Showcase
Avid	Delight	Liberator	Skye
Award	Diva	Madison	Solar Eclipse
Awesome	Dynamo	Mercury	Sonoma
Bandera	Eagleton	Midnight	Sorbonne
Barduke	Emblem	Midnight II	Starburst
Barnique	Empire	Moon Shadow	Sudden Impact
Baroness	Envicta	Moonlight SLT	Total Eclipse
Barrister	Everest	Mystere	Touche
Barvette HGT	Everglade	Nu Destiny	Tsunami
Bedazzled	Excursion	NuChicago	Unique
Belissimo	Freedom II	NuGlade	Valor
Bewitched	Freedom III	Odyssey	Voyager II
Beyond	Front Page	Perfection	Washington
Blacksburg II	Futurity	Pinot	Zinfandel
Blackstone	Gaelic	Princeton 105	
Blue Note	Ginney II	Prosperity	

Approved Hard Fescue Cultivars:

Aurora II	Eureka II	Oxford	Scaldis II
Aurora Gold	Firefly	Reliant II	Spartan II
Berkshire	Granite	Reliant IV	Stonehenge
Bighorn GT	Heron	Rescue 911	
Chariot	Nordic	Rhino	

On cut and fill slopes 2:1 or steeper add 20# Sericea Lespedeza January 1 - December 31.

Fertilizer shall be 10-20-20 analysis. A different analysis of fertilizer may be used provided the 1-2-2 ratio is maintained and the rate of application adjusted to provide the same amount of plant food as a 10-20-20 analysis and as directed.

Native Grass Seeding And Mulching (West)

Native Grass Seeding and Mulching shall be performed on the disturbed areas of wetlands and riparian areas, and adjacent to Stream Relocation and/or trout stream construction within a 50 foot zone on both sides of the stream or depression, measured from top of stream bank or center of depression. The stream bank of the stream relocation shall be seeded by a method that does not alter the typical cross section of the stream bank. Native Grass Seeding and Mulching shall also be performed in the permanent soil reinforcement mat section of preformed scour holes, and in other areas as directed.

The kinds of seed and fertilizer, and the rates of application of seed, fertilizer, and limestone, shall be as stated below. During periods of overlapping dates, the kind of seed to be used shall be determined. All rates are in pounds per acre.

August 1 - June 1		**May 1 – September 1**	
18#	Creeping Red Fescue	18#	Creeping Red Fescue
8#	Big Bluestem	8#	Big Bluestem
6#	Indiangrass	6#	Indiangrass
4#	Switchgrass	4#	Switchgrass
35#	Rye Grain	25#	German or Browntop Millet
500#	Fertilizer	500#	Fertilizer
4000#	Limestone	4000#	Limestone

Approved Creeping Red Fescue Cultivars:

Aberdeen Boreal Epic Cindy Lou

Fertilizer shall be 10-20-20 analysis. A different analysis of fertilizer may be used provided the 1-2-2 ratio is maintained and the rate of application adjusted to provide the same amount of plant food as a 10-20-20 analysis and as directed.

Native Grass Seeding and Mulching shall be performed in accordance with Section 1660 of the *Standard Specifications* and vegetative cover sufficient to restrain erosion shall be installed immediately following grade establishment.

Measurement and Payment

Native Grass *Seeding and Mulching* will be measured and paid for in accordance with Article 1660-8 of the *Standard Specifications*.

<u>TEMPORARY SEEDING:</u>

Fertilizer shall be the same analysis as specified for *Seeding and Mulching* and applied at the rate of 400 pounds and seeded at the rate of 50 pounds per acre. German Millet, or Browntop Millet shall be used in summer months and rye grain during the remainder of the year. The Engineer will determine the exact dates for using each kind of seed.

FERTILIZER TOPDRESSING:

Fertilizer used for topdressing shall be 16-8-8 grade and shall be applied at the rate of 500 pounds per acre. A different analysis of fertilizer may be used provided the 2-1-1 ratio is maintained and the rate of application adjusted to provide the same amount of plant food as 16-8-8 analysis and as directed.

SUPPLEMENTAL SEEDING:

The kinds of seed and proportions shall be the same as specified for *Seeding and Mulching*, and the rate of application may vary from 25# to 75# per acre. The actual rate per acre will be determined prior to the time of topdressing and the Contractor will be notified in writing of the rate per acre, total quantity needed, and areas on which to apply the supplemental seed. Minimum tillage equipment, consisting of a sod seeder shall be used for incorporating seed into the soil as to prevent disturbance of existing vegetation. A clodbuster (ball and chain) may be used where degree of slope prevents the use of a sod seeder.

MOWING:

The minimum mowing height on this project shall be six inches.

RESPONSE FOR EROSION CONTROL:

Description

Furnish the labor, materials, tools and equipment necessary to move personnel, equipment, and supplies to the project necessary for the pursuit of any or all of the following work as shown herein, by an approved subcontractor.

Section	Erosion Control Item	Unit
1605	Temporary Silt Fence	LF
1606	Special Sediment Control Fence	LF/TON
1615	Temporary Mulching	ACR
1620	Seed - Temporary Seeding	LB
1620	Fertilizer - Temporary Seeding	TN
1631	Matting for Erosion Control	SY
SP	Coir Fiber Mat	SY
1640	Coir Fiber Baffles	LF
SP	Permanent Soil Reinforcement Mat	SY
1660	Seeding and Mulching	ACR

1661	Seed - Repair Seeding	LB
1661	Fertilizer - Repair Seeding	TON
1662	Seed - Supplemental Seeding	LB
1665	Fertilizer Topdressing	TON
SP	Safety/Highly Visible Fencing	LF
SP	Response for Erosion Control	EA

Construction Methods

Provide an approved subcontractor who performs an erosion control action as described in the NPDES Inspection Form SPPP30. Each erosion control action may include one or more of the above work items.

Measurement and Payment

Response for Erosion Control will be measured and paid for by counting the actual number of times the subcontractor moves onto the project, including borrow and waste sites, and satisfactorily completes an erosion control action described in Form 1675. The provisions of Article 104-5 of the *Standard Specifications* will not apply to this item of work.

Payment will be made under:

Pay Item	**Pay Unit**
Response for Erosion Control	Each

MINIMIZE REMOVAL OF VEGETATION:

The Contractor shall minimize removal of vegetation within project limits to the maximum extent practicable. Vegetation along stream banks and adjacent to other jurisdictional resources outside the construction limits shall only be removed upon approval of Engineer. No additional payment will be made for this minimization work.

STOCKPILE AREAS:

The Contractor shall install and maintain erosion control devices sufficient to contain sediment around any erodible material stockpile areas as directed.

ACCESS AND HAUL ROADS:

At the end of each working day, the Contractor shall install or re-establish temporary diversions or earth berms across access/haul roads to direct runoff into sediment devices. Silt fence sections that are temporarily removed shall be reinstalled across access/haul roads at the end of each working day.

WASTE AND BORROW SOURCES:

Payment for temporary erosion control measures, except those made necessary by the Contractor's own negligence or for his own convenience, will be paid for at the appropriate contract unit price for the devices or measures utilized in borrow sources and waste areas.

No additional payment will be made for erosion control devices or permanent seeding and mulching in any commercial borrow or waste pit. All erosion and sediment control practices that may be required on a commercial borrow or waste site will be done at the Contractor's expense.

All offsite Staging Areas, Borrow and Waste sites shall be in accordance with "Borrow and Waste Site Reclamation Procedures for Contracted Projects" located at:

http://www.ncdot.gov/doh/operations/dp_chief_eng/roadside/fieldops/downloads/Files/ContractedReclamationProcedures.pdf

All forms and documents referenced in the "Borrow and Waste Site Reclamation Procedures for Contracted Projects" shall be included with the reclamation plans for offsite staging areas, and borrow and waste sites.

TEMPORARY DIVERSION:

This work consists of installation, maintenance, and cleanout of *Temporary Diversions* in accordance with Section 1630 of the *Standard Specifications*. The quantity of excavation for installation and cleanout will be measured and paid for as *Silt Excavation* in accordance with Article 1630-4 of the *Standard Specifications*.

SAFETY FENCE AND JURISDICTIONAL FLAGGING:

Description

Safety Fence shall consist of furnishing materials, installing and maintaining polyethylene or polypropylene fence along the outside riparian buffer, wetland, or water boundary, or other boundaries located within the construction corridor to mark the areas that have been approved to infringe within the buffer, wetland, endangered vegetation, culturally sensitive areas or water. The fence shall be installed prior to any land disturbing activities.

Interior boundaries for jurisdictional areas noted above shall be delineated by stakes and highly visible flagging.

Jurisdictional boundaries at staging areas, waste sites, or borrow pits, whether considered outside or interior boundaries shall be delineated by stakes and highly visible flagging.

Materials

(A) Safety Fencing

Polyethylene or polypropylene fence shall be a highly visible preconstructed safety fence approved by the Engineer. The fence material shall have an ultraviolet coating.

Either wood posts or steel posts may be used. Wood posts shall be hardwood with a wedge or pencil tip at one end, and shall be at least 5 ft. in length with a minimum nominal 2" x 2” cross section. Steel posts shall be at least 5 ft. in length, and have a minimum weight of 0.85 lb/ft of length.

(B) Boundary Flagging

Wooden stakes shall be 4 feet in length with a minimum nominal 3/4” x 1-3/4” cross section. The flagging shall be at least 1” in width. The flagging material shall be vinyl and shall be orange in color and highly visible.

Construction Methods

No additional clearing and grubbing is anticipated for the installation of this fence. The fence shall be erected to conform to the general contour of the ground.

(A) Safety Fencing

Posts shall be set at a maximum spacing of 10 ft., maintained in a vertical position and hand set or set with a post driver. Posts shall be installed a minimum of 2 ft. into the ground. If hand set, all backfill material shall be thoroughly tamped. Wood posts may be sharpened to a dull point if power driven. Posts damaged by power driving shall be removed and replaced prior to final acceptance. The tops of all wood posts shall be cut at a 30-degree angle. The wood posts may, at the option of the Contractor, be cut at this angle either before or after the posts are erected.

The fence geotextile shall be attached to the wood posts with one 2" galvanized wire staple across each cable or to the steel posts with wire or other acceptable means.

Place construction stakes to establish the location of the safety fence in accordance with Article 105-9 or Article 801-1 of the *Standard Specifications.* No direct pay will be made for the staking of the safety fence. All stakeouts for safety fence shall be considered incidental to the work being paid for as “Construction Surveying”, except that where there is no pay item for construction surveying, all safety fence stakeout will be performed by state forces.

The Contractor shall be required to maintain the safety fence in a satisfactory condition for the duration of the project as determined by the Engineer.

(B) Boundary Flagging

Boundary flagging delineation of interior boundaries shall consist of wooden stakes on 25 feet maximum intervals with highly visible orange flagging attached. Stakes shall be installed a minimum of 6" into the ground. Interior boundaries may be staked on a tangent that runs parallel to buffer but must not encroach on the buffer at any location. Interior boundaries of hand clearing shall be identified with a different colored flagging to distinguish it from mechanized clearing.

Boundary flagging delineation of interior boundaries will be placed in accordance with Article 105-9 or Article 801-1 of the *Standard Specifications*. No direct pay will be made for delineation of the interior boundaries. This delineation will be considered incidental to the work being paid for as *Construction Surveying*, except that where there is no pay item or construction surveying the cost of boundary flagging delineation shall be included in the unit prices bid for the various items in the contract. Installation for delineation of all jurisdictional boundaries at staging areas, waste sites, or borrow pits shall consist of wooden stakes on 25 feet maximum intervals with highly visible orange flagging attached. Stakes shall be installed a minimum of 6" into the ground. Additional flagging may be placed on overhanging vegetation to enhance visibility but does not substitute for installation of stakes.

Installation of boundary flagging for delineation of all jurisdictional boundaries at staging areas, waste sites, or borrow pits shall be performed in accordance with Subarticle 230-4(B)(5) or Subarticle 802-2(F) of the *Standard Specifications*. No direct pay will be made for this delineation, as the cost of same shall be included in the unit prices bid for the various items in the contract.

The Contractor shall be required to maintain alternative stakes and highly visible flagging in a satisfactory condition for the duration of the project as determined by the Engineer.

Measurement and Payment

Safety Fence will be measured and paid as the actual number of linear feet of polyethylene or polypropylene fence installed in place and accepted. Such payment will be full compensation including but not limited to furnishing and installing fence geotextile with necessary posts and post bracing, staples, tie wires, tools, equipment and incidentals necessary to complete this work.

Payment will be made under:

Pay Item	**Pay Unit**
Safety Fence	Linear Foot

PERMANENT SOIL REINFORCEMENT MAT:

Description

This work consists of furnishing and placing *Permanent Soil Reinforcement Mat*, of the type specified, over previously prepared areas as directed.

Materials

The product shall be a permanent erosion control reinforcement mat and shall be constructed of synthetic or a combination of coconut and synthetic fibers evenly distributed throughout the mat between a bottom UV stabilized netting and a heavy duty UV stabilized top net. The matting shall be stitched together with UV stabilized polypropylene thread to form a permanent three-dimensional structure. The mat shall have the following minimum physical properties:

Property	Test Method	Value	Unit
Light Penetration	ASTM D6567	9	%
Thickness	ASTM D6525	0.40	in
Mass Per Unit Area	ASTM D6566	0.55	lb/sy
Tensile Strength	ASTM D6818	385	lb/ft
Elongation (Maximum)	ASTM D6818	49	%
Resiliency	ASTM D1777	>70	%
UV Stability *	ASTM D4355	≥80	%
Porosity (Permanent Net)	ECTC Guidelines	≥85	%
Maximum Permissible Shear Stress (Vegetated)	Performance Bench Test	≥8.0	lb/ft^2
Maximum Allowable Velocity (Vegetated)	Performance Bench Test	≥16.0	ft/s

*ASTM D1682 Tensile Strength and % strength retention of material after 1000 hours of exposure.

Submit a certification (Type 1, 2, or 3) from the manufacturer showing:

(A) the chemical and physical properties of the mat used, and
(B) conformance of the mat with this specification.

Construction Methods

Matting shall be installed in accordance with Subarticle 1631-3(B) of the *Standard Specifications*.

All areas to be protected with the mat shall be brought to final grade and seeded in accordance with Section 1660 of the *Standard Specifications*. The surface of the soil shall be smooth, firm, stable and free of rocks, clods, roots or other obstructions that would prevent the mat from lying

in direct contact with the soil surface. Areas where the mat is to be placed will not need to be mulched.

Measurement and Payment

Permanent Soil Reinforcement Mat will be measured and paid for as the actual number of square yards measured along the surface of the ground over which Permanent Soil Reinforcement Mat is installed and accepted. Overlaps will not be included in the measurement, and will be considered as incidental to the work. Such payment shall be full compensation for furnishing and installing the mat, including overlaps, and for all required maintenance.

Payment will be made under:

Pay Item	Pay Unit
Permanent Soil Reinforcement Mat	Square Yard

SKIMMER BASIN WITH BAFFLES:

Description

Provide a skimmer basin to remove sediment from construction site runoff at locations shown in the erosion control plans. See the Skimmer Basin with Baffles Detail sheet provided in the erosion control plans. Work includes constructing sediment basin, installation of temporary slope drain pipe and coir fiber baffles, furnishing, installation and cleanout of skimmer, providing and placing stone pad on bottom of basin underneath skimmer device, providing and placing a geotextile spillway liner, providing coir fiber mat stabilization for the skimmer outlet, disposing of excess materials, removing temporary slope drain, coir fiber baffles, geotextile liner and skimmer device, backfilling basin area with suitable material and providing proper drainage when basin area is abandoned.

Materials

Item	Section
Stone for Erosion Control, Class B	1042
Geotextile for Soil Stabilization, Type 4	1056
Fertilizer for Temporary Seeding	1060-2
Seed for Temporary Seeding	1060-4
Seeding and Mulching	1060-4
Matting for Erosion Control	1060-8
Staples	1060-8
Coir Fiber Mat	1060-14
Temporary Slope Drain	1622-2
Coir Fiber Baffle	1640

Provide appropriately sized and approved skimmer device.

Provide Schedule 40 PVC pipe with a length of 6 ft. to attach to the skimmer and the coupling connection to serve as the arm pipe. For skimmer sizes of 2.5 in. and smaller, the arm pipe diameter shall be 1.5 inches. For skimmer sizes of 3 in. and larger, refer to manufacturer recommendation.

Provide 4” diameter Schedule 40 PVC pipe to attach to coupling connection of skimmer to serve as the barrel pipe through the earthen dam.

Anchors: Staples, stakes, or reinforcement bars shall be used as anchors.

Wooden Stakes:

Provide hardwood stakes 12"- 24" long with a 2" x 2" nominal square cross section. One end of the stake must be sharpened or beveled to facilitate driving through the coir fiber mat and down into the underlying soil. The other end of the stake needs to have a 1"- 2" long head at the top with a 1"- 2" notch following to catch and secure the coir fiber mat.

Steel Reinforcement Bars:

Provide uncoated #10 steel reinforcement bars 24" nominal length. The bars shall have a 4" diameter bend at one end with a 4" straight section at the tip to catch and secure the coir fiber mat.

Staples:

Provide staples made of 0.125" diameter new steel wire formed into a *u* shape not less than 12" in length with a throat of 1" in width.

Construction Methods

Excavate basin according to the erosion control plans with basin surface free of obstructions, debris, and pockets of low-density material. Install temporary slope drain pipe and construct the primary spillway according to the Skimmer Basin with Baffles Detail sheet in the erosion control plans. Temporary slope drain pipe at inlet of basin may be replaced by geotextile as directed. Construct the coir fiber baffles according to *Roadway Standard Drawings* No. 1640.01 and Section 1640 of the *Standard Specifications*.

Install skimmer device according to manufacturer recommendations. Install 4” Schedule 40 PVC pipe into dam on the lower side of basin 1 ft. from the bottom of the basin and according to the detail, and extend the pipe so the basin will drain. Attach a 6 ft. arm pipe to the coupling connection and skimmer according to manufacturer recommendations. The coupling shall be rigid and non-buoyant and not exceed a diameter of 4” and 12” in length. Attach the rope included with the skimmer to the tee between the vent socket and the tube inlet, and the other end to a wooden stake or metal post. Clean out skimmer device when it becomes clogged with sediment and/or debris and is unable to float at the top of water in skimmer basin. Take appropriate measures to avoid ice accumulation in the skimmer device. Construct a stone pad of

Class B stone directly underneath the skimmer device at bottom of basin. The pad shall be a minimum of 12” in height, and shall have a minimum cross sectional area of 4 ft. by 4 ft.

Line primary spillway with geotextile unrolled in the direction of flow and lay smoothly but loosely on soil surface without creases. Bury edges of geotextile in a trench at least 5" deep and tamp firmly. If geotextile for the primary spillway is not one continuous piece of material, make horizontal overlaps a minimum of 18" with upstream geotextile overlapping the downstream geotextile. Secure geotextile with eleven gauge wire staples shaped into a *u* shape with a length of not less than 12" and a throat not less than 1" in width. Place staples along outer edges and throughout the geotextile a maximum of 3 ft. horizontally and vertically. Geotextile shall be placed to the bottom and across the entire width of the basin according to the Skimmer Basin with Baffles detail. Place sealant inside basin around barrel pipe on top of geotextile with a minimum width of 6 in.

At the skimmer outlet, provide a smooth soil surface free from stones, clods, or debris that will prevent contact of the coir fiber matting with the soil. Unroll the matting and apply without stretching such that it will lie smoothly but loosely on the soil surface. Wooden stakes, reinforcement bars, or staples may be used as anchors in accordance with the details in the plans and as directed. Place anchors across the matting at the ends approximately 1 ft. apart. Place anchors along the outer edges and down the center of the matting 3 ft. apart.

All bare side slope sections of the skimmer basin shall be seeded with a temporary or permanent seed mix as directed and in accordance with Articles 1620-3, 1620-4, 1620-5, 1660-4, 1660-5 and 1660-7 of the *Standard Specifications*. Straw or excelsior matting shall be installed on all bare side slope sections immediately upon the completion of seeding and in accordance with Article 1631-3 of the *Standard Specifications*.

Measurement and Payment

Silt Excavation will be measured and paid for in accordance with Article 1630-4 of the *Standard Specifications*, as calculated from the typical section throughout the length of the basin as shown on the final approved plans.

Geotextile for Soil Stabilization will be measured and paid for in accordance with Article 270-4 of the *Standard Specifications*.

Coir Fiber Baffles will be measured and paid for in accordance with Article 1640-4 of the *Standard Specifications*.

__" *Skimmer* will be measured in units of each. _*_” Skimmer* will be measured and paid for as the maximum number of each size skimmer acceptably installed and in use at any one time during the life of the project. Barrel and arm pipe, cleanout, relocation and reinstallation of _*_” Skimmer* is considered incidental to the measurement of the quantity of __*” Skimmer* and no separate payment will be made. No separate payment shall be made if __*” Skimmer*, barrel and/or arm pipe(s) are damaged by ice accumulation.

Coir Fiber Mat will be measured and paid for as the actual number of square yards measured along the surface of the ground over which coir fiber mat is installed and accepted.

Temporary Slope Drain will be measured and paid for in accordance with Article 1622-4 of the *Standard Specifications*.

Stone for Erosion Control, Class __ will be measured and paid for in accordance with Article 1610-4 of the *Standard Specifications*.

Seeding and Mulching will be measured and paid for in accordance with Article 1660-8 of the *Standard Specifications*.

Seed for Temporary Seeding will be measured and paid for in accordance with Article 1620-6 of the *Standard Specifications*.

Fertilizer for Temporary Seeding will be measured and paid for in accordance with Article 1620-6 of the *Standard Specifications*.

Matting for Erosion Control will be measured and paid for in accordance with Article 1631-4 of the *Standard Specifications*.

No measurement will be made for other items or for over excavation or stockpiling.

Payment will be made under:

Pay Item	**Pay Unit**
__" Skimmer	Each
Coir Fiber Mat	Square Yard

COIR FIBER WATTLES WITH POLYACRYLAMIDE (PAM):

Description

Coir Fiber Wattles are tubular products consisting of coir fibers (coconut fibers) encased in coir fiber netting. Coir Fiber Wattles are used on slopes or channels to intercept runoff and act as a velocity break. Coir Fiber Wattles are to be placed at locations shown on the plans or as directed. Installation shall follow the detail provided in the plans and as directed. Work includes furnishing materials, installation of coir fiber wattles, matting installation, PAM application, and removing wattles.

Materials

Coir Fiber Wattle shall meet the following specifications:

100% Coir (Coconut) Fibers
Minimum Diameter 12 in.

Minimum Density	3.5 lb/ft^3 +/- 10%
Net Material	Coir Fiber
Net Openings	2 in. x 2 in.
Net Strength	90 lbs.
Minimum Weight	2.6 lbs./ft. +/- 10%

Anchors: Stakes shall be used as anchors.

Wooden Stakes:

Provide hardwood stakes a minimum of 2-ft. long with a 2 in. x 2 in. nominal square cross section. One end of the stake must be sharpened or beveled to facilitate driving down into the underlying soil.

Matting shall meet the requirements of Article 1060-8 of the *Standard Specifications*, or shall meet specifications provided elsewhere in this contract.

Provide staples made of 0.125" diameter new steel wire formed into a *u* shape not less than 12" in length with a throat of 1" in width.

Polyacrylamide (PAM) shall be applied in powder form and shall be anionic or neutrally charged. Soil samples shall be obtained in areas where the wattles will be placed, and from offsite material used to construct the roadway, and analyzed for the appropriate PAM flocculant to be utilized with each wattle. The PAM product used shall be listed on the North Carolina Department of Environment and Natural Resources (NCDENR) Division of Water Quality (DWQ) web site as an approved PAM product for use in North Carolina.

Construction Methods

Coir Fiber Wattles shall be secured to the soil by wire staples approximately every 1 linear foot and at the end of each section of wattle. A minimum of 4 stakes shall be installed on the downstream side of the wattle with a maximum spacing of 2 linear feet along the wattle, and according to the detail. Install a minimum of 2 stakes on the upstream side of the wattle according to the detail provided in the plans. Stakes shall be driven into the ground a minimum of 10 in. with no more than 2 in. projecting from the top of the wattle. Drive stakes at an angle according to the detail provided in the plans.

Only install coir fiber wattle(s) to a height in ditch so flow will not wash around wattle and scour ditch slopes and according to the detail provided in the plans and as directed. Overlap adjoining sections of wattles a minimum of 6 in.

Installation of matting shall be in accordance with the detail provided in the plans, and in accordance with Article 1631-3 of the *Standard Specifications*, or in accordance with specifications provided elsewhere in this contract.

Apply PAM over the lower center portion of the coir fiber wattle where the water is going to flow over at a rate of 2 ounces per wattle, and 1 ounce of PAM on matting on each side of the wattle. PAM applications shall be done during construction activities after every rainfall event that is equal to or exceeds 0.50 in.

The Contractor shall maintain the coir fiber wattles until the project is accepted or until the wattles are removed, and shall remove and dispose of silt accumulations at the wattles when so directed in accordance with the requirements of Section 1630 of the *Standard Specifications*.

Measurement and Payment

Coir Fiber Wattles will be measured and paid for by the actual number of linear feet of wattles which are installed and accepted. Such price and payment will be full compensation for all work covered by this section, including, but not limited to, furnishing all materials, labor, equipment and incidentals necessary to install the *Coir Fiber Wattles*.

Matting will be measured and paid for in accordance with Article 1631-4 of the *Standard Specifications*, or in accordance with specifications provided elsewhere in this contract.

Polyacrylamide(PAM) will be measured and paid for by the actual weight in pounds of PAM applied to the coir fiber wattles. Such price and payment will be full compensation for all work covered by this section, including, but not limited to, furnishing all materials, labor, equipment and incidentals necessary to apply the *Polyacrylamide(PAM)*.

Payment will be made under:

Pay Item	**Pay Unit**
Polyacrylamide(PAM)	Pound
Coir Fiber Wattle	Linear Foot

<u>TEMPORARY ROCK SILT CHECK TYPE A WITH EXCELSIOR MATTING AND POLYACRYLAMIDE (PAM):</u>

Description

Temporary Rock Silt Checks Type A with Excelsior Matting and Polyacrylamide (PAM) are devices utilized in temporary and permanent ditches to reduce runoff velocity and incorporate PAM into the construction runoff to increase settling of sediment particles and reduce turbidity of runoff. Temporary Rock Silt Checks Type A with Excelsior Matting and PAM are to be placed at locations shown on the plans or as directed. Installation shall follow the detail provided in the plans and as directed. Work includes furnishing materials, installation of Temporary Rock Silt Checks Type A, matting installation, PAM application, and removing Temporary Rock Silt Checks Type A with Excelsior Matting and PAM.

Materials

Structural stone shall be class B stone that meets the requirements of Section 1042 of the *Standard Specifications* for Stone for Erosion Control, Class B.

Sediment control stone shall be #5 or #57 stone, which meets the requirements of Section 1005 of the *Standard Specifications* for these stone sizes.

Matting shall meet the requirements of Excelsior Matting in Subarticle 1060-8(B) of the *Standard Specifications*, or shall meet specifications provided elsewhere in this contract.

Polyacrylamide (PAM) shall be applied in powder form and shall be anionic or neutrally charged. Soil samples shall be obtained in areas where the Temporary Rock Silt Checks Type A with Excelsior Matting and PAM will be placed, and from offsite material used to construct the roadway, and analyzed for the appropriate PAM flocculant to be utilized with each Temporary Rock Silt Check Type A. The PAM product used shall be listed on the North Carolina Department of Environment and Natural Resources (NCDENR) Division of Water Quality (DWQ) web site as an approved PAM product for use in North Carolina.

Construction Methods

Temporary Rock Silt Checks Type A shall be installed in accordance with Subarticle 1633-3(A) of the *Standard Specifications*, Roadway Standard Drawing No. 1633.01 and the detail provided in the plans.

Installation of matting shall be in accordance with the detail provided in the plans, and anchored by placing Class B stone on top of the matting at the upper and lower ends.

Apply PAM at a rate of 4 ounces over the center portion of the Temporary Rock Silt Checks Type A and matting where the water is going to flow over. PAM applications shall be done during construction activities and after every rainfall event that is equal to or exceeds 0.50 in.

The Contractor shall maintain the Temporary Rock Silt Checks Type A with Excelsior Matting and PAM until the project is accepted or until the Temporary Rock Silt Checks Type A with Excelsior Matting and PAM are removed, and shall remove and dispose of silt accumulations at the Temporary Rock Silt Checks Type A with Excelsior Matting and PAM when so directed in accordance with the requirements of Section 1630 of the *Standard Specifications*.

Measurement and Payment

Temporary Rock Silt Checks Type A will be measured and paid for in accordance with Article 1633-5 of the *Standard Specifications*, or in accordance with specifications provided elsewhere in this contract.

Matting will be measured and paid for in accordance with Article 1631-4 of the *Standard Specifications*, or in accordance with specifications provided elsewhere in this contract.

Polyacrylamide(PAM) will be measured and paid for by the actual weight in pounds of PAM applied to the Temporary Rock Silt Checks Type A. Such price and payment will be full compensation for all work covered by this section, including, but not limited to, furnishing all materials, labor, equipment and incidentals necessary to apply the *Polyacrylamide(PAM)*.

Payment will be made under:

Pay Item	**Pay Unit**
Polyacrylamide(PAM)	Pound

COIR FIBER MAT:

Description

Furnish material, install and maintain coir fiber mat in locations shown on the plans or in locations as directed. Work includes providing all materials, excavating and backfilling, and placing and securing coir fiber mat with stakes, steel reinforcement bars or staples as directed.

Materials

Item	**Section**
Coir Fiber Mat	1060-14

Anchors: Stakes, reinforcement bars, or staples shall be used as anchors.

Wooden Stakes:

Provide hardwood stakes 12"- 24" long with a 2" x 2" nominal square cross section. One end of the stake must be sharpened or beveled to facilitate driving through the coir fiber mat and down into the underlying soil. The other end of the stake needs to have a 1"- 2" long head at the top with a 1"- 2" notch following to catch and secure the coir fiber mat.

Steel Reinforcement Bars:

Provide uncoated #10 steel reinforcement bars 24" nominal length. The bars shall have a 4" diameter bend at one end with a 4" straight section at the tip to catch and secure the coir fiber mat.

Staples:

Provide staples made of 0.125" diameter new steel wire formed into a *u* shape not less than 12" in length with a throat of 1" in width.

Construction Methods

Place the coir fiber mat immediately upon final grading. Provide a smooth soil surface free from stones, clods, or debris that will prevent the contact of the mat with the soil. Unroll the mat and apply without stretching such that it will lie smoothly but loosely on the soil surface.

For stream relocation applications, take care to preserve the required line, grade, and cross section of the area covered. Bury the top slope end of each piece of mat in a narrow trench at least 6 in. deep and tamp firmly. Where one roll of matting ends and a second roll begins, overlap the end of the upper roll over the buried end of the second roll so there is a 6 in. overlap. Construct check trenches at least 12 in. deep every 50 ft. longitudinally along the edges of the mat or as directed. Fold over and bury mat to the full depth of the trench, close and tamp firmly. Overlap mat at least 6 in. where 2 or more widths of mat are installed side by side.

Place anchors across the mat at the ends approximately 1 ft. apart. Place anchors along the outer edges and down the center of the mat 3 ft. apart.

Adjustments in the trenching or anchoring requirements to fit individual site conditions may be required.

Measurement and Payment

Coir Fiber Mat will be measured and paid for as the actual number of square yards measured along the surface of the ground over which coir fiber mat is installed and accepted.

No measurement will be made for anchor items.

Payment will be made under:

Pay Item	**Pay Unit**
Coir Fiber Mat	Square Yard

<u>CONCRETE WASHOUT STRUCTURE:</u>

Description

Concrete washout structures are watertight enclosures constructed above or below grade to contain concrete waste on construction sites. Concrete waste can include concrete waste water from washing out ready-mix trucks, drums, pumps, or other equipment. Concrete waste also includes concrete slurries from concrete saw cutting, coring, grinding, grooving operations, or hydro-concrete demolition. Concrete washouts must prevent the discharge of concrete waste materials to storm drainage systems, surface waters, wetlands, and buffers. Work for above grade washout structures includes gathering high cohesive and low infiltration soil to construct an above grade earthen berm basin. Work also includes preparing a rock and debris free soil base inside this earthen basin, installing a geomembrane liner in the basin, and then placing sandbags along the entire polypropylene liner basin perimeter. Work for below grade washout

structures includes preparing a rock and debris free soil base, excavation of a basin with non-vertical side slopes, installing a geomembrane liner in the basin, and then placing sandbags along the entire polypropylene liner excavation perimeter. Construct a gravel pad with Class A stone and a geotextile under liner to provide a defined access path to the concrete washout structures. Install safety fence around the perimeter of the concrete washout structures.

Materials

Item	**Section**
Borrow Material	1018
Stone for Erosion Control, Class A	1042
Geotextile for Drainage, Type 2	1056

The geomembrane basin liner shall meet the following minimum physical properties for low permeability, polypropylene or polyethylene geomembranes:

Property	**Test Method**	**Value**	**Unit**
Thickness, nominal		10	mil
Weight		0.04	lbs./ft^2
*1" Tensile Strength	ASTM D-751	52	lbf.
Elongation at Break	ASTM D-751	600	%
*Grab Tensile	ASTM D-751	70	lbf.
*Trapezoid Tear	ASTM D-4533	55	lbf.
Hydrostatic Resistance	ASTM D-751	70	lb./in^2
Water Vapor Transmission Rate	ASTM E-96 Procedure B	0.03	gal/100in^2/day
Perm Rating	ASTM E-96 Procedure B	0.066	U.S. Perms

***Tests are an average of diagonal directions.**

Safety Fence shall meet the specifications as provided elsewhere in this contract.

Construction Methods

Above Grade Structures

Assemble high cohesive and low infiltration soil to build an enclosed earthen berm for an above grade concrete washout basin in accordance with the details and as directed. Construct the height, length, and width of the earthen berm according to the detail. Slope the interior and exterior walls of the earthen berm at 1:1 and then compact to provide structural stability and contain concrete washout liquids and solid materials until evaporation, curing, extraction, or final removal.

The geomembrane liner will be of sufficient width and length so there will be no seams. Install the geomembrane lining by overlaying it in the basin to completely cover any exposed soil to create a water tight concrete washout basin. Extend the geomembrane lining from inside the basin floor, up the earth slope of the basin and extend, overlay, and wrap outside the earthen

berm. Trench the toe of the geomembrane lining into an eight inch depth trench and then backfill and tamper with soil.

Below Grade Structures

Excavate an area for concrete washout in accordance with the details and as directed. Excavate to a minimum depth of 3 feet. Slope the interior walls of the excavated area at 1:1 and then compact to provide structural stability and contain concrete washout liquids and solid materials until evaporation, curing, extraction, or final removal.

The geomembrane liner will be of sufficient width and length so there will be no seams. Install the geomembrane lining by overlaying it in the excavated area to completely cover any exposed soil to create a watertight impoundment. Extend the geomembrane lining from the excavation floor, up the interior slope of the excavated basin and beyond the outside perimeter of the excavation.

Prepare the soil base to be free of rocks or other debris that may cause holes or tears in the geomembrane lining.

Install safety fence around the perimeter of the concrete washout structures in accordance with the *Safety Fence and Jurisdictional Flagging* special provision.

Construct a stone gravel pad with Class A stone (or other approved aggregate material) and a geotextile liner to provide a defined access path to the concrete washout structure. Construct the stone gravel pad according to *Roadway Standard Drawings* No. 1607.01 and Section 1607 of the *Standard Specifications*. Post a sign with the words "Concrete Washout" in close proximity of the concrete washout area, so it is clearly visible to site personnel.

The construction details for the above grade and below grade concrete washout structures can be found on the following web page link:

http://www.ncdot.gov/doh/operations/dp_chief_eng/roadside/soil_water/details/

Maintenance and Removal

Maintain the concrete washout structure(s) to provide adequate holding capacity plus a minimum freeboard of 12 inches. Remove and dispose of hardened concrete and return the structure to a functional condition after reaching 75% capacity.

Inspect concrete washout structures for damage (i.e. tears in geomembrane liner, missing sand bags) and maintain for effectiveness.

Remove the concrete washout structures and sign upon project completion. If appropriate and possible, reuse the geomembrane liner, the sandbags, orange safety fence, the Class A stone, and the geotextile. Otherwise, properly dispose of items. Grade the earth material to match the existing contours and permanently seed and mulch area.

Measurement and Payment

Concrete Washout Structure will be measured and paid for by counting the actual number of washout structures installed and maintained on the project. Such price and payment will be full compensation for all work including but not limited to furnishing materials, construction, maintenance and removal of concrete washout structures, grading and seeding and mulching area. The provisions of Article 104-5 of the *Standard Specifications* will not apply to this item of work.

Payment will be made under:

Pay Item	**Pay Unit**
Concrete Washout Structure	Each

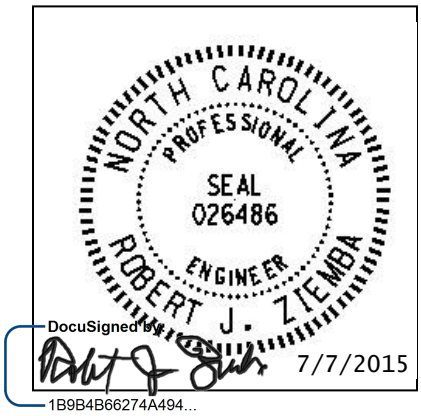

B-3159

Signals and Intelligent Transportation Systems Project Special Provisions

(Version 12.4)

Prepared By: iou
7-Jul-15

Contents

1. 2012 STANDARD SPECIFICATIONS FOR ROADS & STRUCTURES 3
1.1. POLYMER CONCRETE (PC) JUNCTION BOXES (1091-5(B)) 3
1.2. SUBMITTAL REQUIREMENTS (1098-1(B)) 3
1.3. JUNCTION BOXES (1098-5) 3
1.4. CONTROLLERS WITH CABINETS – MATERIAL (1751-2) 3
1.5. PEDESTALS (1743) 3
2. SIGNAL HEADS 4
2.1. MATERIALS 4
A. General: 4
B. Vehicle Signal Heads: 6
C. Pedestrian Signal Heads: 9
D. Signal Cable: 11
3. MODIFY SPREAD SPECTRUM WIRELESS RADIO 11
3.1. DESCRIPTION 11
3.2. MATERIALS 11
3.3. CONSTRUCTION METHODS 11
3.4. MEASUREMENT AND PAYMENT 12
4. TRAFFIC SIGNAL SUPPORTS 12
4.1. METAL TRAFFIC SIGNAL SUPPORTS – ALL POLES 12
A. General: 12
B. Materials: 14
C. Construction Methods: 15
4.2. METAL POLE UPRIGHTS (VERTICAL MEMBERS) 16
A. Materials: 16
4.3. MAST ARM POLE SHAFTS 17
A. Construction Methods: 17
4.4. MAST ARMS 17
A. Materials: 18
B. Construction Methods: 18
4.5. DRILLED PIER FOUNDATIONS FOR METAL TRAFFIC SIGNAL POLES 18
A. Description: 19
B. Soil Test and Foundation Determination: 19
C. Drilled Pier Construction: 22
4.6. CUSTOM DESIGN OF TRAFFIC SIGNAL SUPPORTS 22
A. General: 22
B. Metal Poles: 23
C. Mast Arms: 25
4.7. METAL SIGNAL POLE REMOVALS 25

A. Description: *25*
B. Construction Methods: *25*
4.8. POLE NUMBERING SYSTEM 25
4.9. MEASUREMENT AND PAYMENT 26

5. PROTECTIVE COATING FOR METAL POLES 26

5.1. DESCRIPTION 26
5.2. MATERIALS 26
5.3. COATING SHOP APPROVAL 27
5.4. POWDER COATING 28
A. Galvanizing *28*
B. Surface Preparation *28*
C. Powder Coating Application and Curing *28*
D. Quality Control *28*
E. Storage, Shipping, and Handling *29*
F. Repair of Powder Coated Material *29*
5.5. ACRYLIC PRIMER AND TOP COAT PAINT SYSTEM 4 (MODIFIED) 29
A. Description *29*
B. Surface Preparation *29*
C. Materials *30*
D. Painting *30*
E. Curing *30*
F. Inspection *30*
G. Handling *30*
H. Repair of Damaged Coating *30*
5.6. MEASUREMENT AND PAYMENT 31

6. CONTROLLERS WITH CABINETS 31

6.1. MATERIALS – TYPE 2070L CONTROLLERS 31
6.2. MATERIALS – GENERAL CABINETS 32
6.3. MATERIALS – TYPE 170E CABINETS 32
A. Type 170 E Cabinets General: *32*
B. Type 170 E Cabinet Electrical Requirements: *33*
C. Type 170 E Cabinet Physical Requirements: *39*
D. Model 2018 Enhanced Conflict Monitor: *40*
6.4. MATERIALS – TYPE 170 DETECTOR SENSOR UNITS 49
6.5. MATERIALS – TYPE 2070E CONTROLLERS 49

1. 2012 STANDARD SPECIFICATIONS FOR ROADS & STRUCTURES

The 2012 Standard Specifications are revised as follows:

1.1. Polymer Concrete (PC) Junction Boxes (1091-5(B))

Page 10-202, revise paragraph starting on line 9 to read "Provide polymer concrete (PC) boxes which have bolted covers and open bottoms. Provide vertical extensions of 6" to 12" as required by project special provisions."

Page 10-202, revise sentence beginning on line 14 to read "Other thermoplastic materials may be used for components which are not normally exposed to sunlight."

1.2. Submittal Requirements (1098-1(B))

Page 10-208, replace paragraph on line 34 with the following:

Submit for approval catalog cuts and/or shop drawings for materials proposed for use on the project. Allow 40 days for review of each submittal. Do not fabricate or order material until receipt of Engineer's approval.

Submit 4 copies of each catalog cut and/or drawing and show for each component the material description, brand name, stock-number, size, rating, manufacturing specification and the intended use (identified by labeling all components with the corresponding contract line item number). Present the submittals neatly arranged in the same order as the contract bid items. Electronic submittals of catalog cuts and drawings may be accepted in lieu of hard copies.

One hard copy and an electronic (PDF) copy of reviewed submittals will be returned to the Engineer from the ITS and Signals Unit.

1.3. Junction Boxes (1098-5)

Page 10-212, sub-Section 1098-5(C) Oversized Junction Boxes

Revise sentence to read, "Provide oversized junction boxes and covers with minimum inside dimensions of 28"(l) x 15"(w) x 22"(h)."

1.4. Controllers with Cabinets – Material (1751-2)

Page 17-37, Section 1751-2 Material

Add the following paragraph:

When the plans or specifications require a Type 2070L controller, contractor may provide a Type 2070E controller. Unless otherwise allowed by the Engineer, provide controllers of only one type.

1.5. Pedestals (1743)

Page 17-34, Add the following new sub-Section:

1743-4 - Screw-In Helical Foundation Anchor Assembly

Description:

Furnish and install screw-in helical foundation as an alternative to the standard reinforced concrete foundation specified in Article 1743 "Pedestals" of the Standard Specifications, for supporting Type I and Type II Pedestals. Do not use for Type III Pedestals.

Materials for Type I – Pedestrian Pushbutton Post:

Fabricate pipe assembly consisting of a 4" diameter x 56" long pipe, single helical blade and square fixed attachment plate. Furnish pipe in accordance with ASTM A-53 ERW Grade B and include a 2" x 3" cable opening in the pipe at 18" below the attachment plate. Furnish steel attachment plate and

helical blade in accordance with ASTM A-36. Include (4) slotted mounting holes in the attachment plate to fit bolt circles ranging from 7-3/4” to 14-3/4" diameter. Furnish additional 3/4” keyholes at slotted holes to permit anchor bolt installation and replacement from top surface. Include combination bolt-head retainer and dirt scrapers at the attachment plate underside to allow for a level or flush-mount plate installation with respect to the finished grade. Galvanize pipe assembly components in accordance with AASHTO M 111 or an approved equivalent.

Furnish (4) 3/4"-10NC x 3” square head anchor bolts to meet the requirements of ASTM 325. Provide (4) 3/4” plain flat galvanized washers, (4) 3/16” thick galvanized plate washers and (4) 3/4" galvanized hex nuts. Galvanize in accordance with AASHTO M 111 or an approved equivalent.

Construction Methods for Type I – Pedestrian Pushbutton Post:

Advance or mechanically screw foundation into soil up until top of attachment plate is level with finished grade. Slide the anchor bolt heads through the keyhole openings and under the attachment plate with threads pointing up. Bolt the pedestal base to the foundation attachment plate. For further construction methods, see manufacturer’s installation drawings.

Materials for Type II – Normal-Duty Pedestal:

Fabricate pipe assembly consisting of a 6” diameter x 60” long, single helical blade, 1-1/4” diameter stinger rod and square fixed attachment plate. Furnish pipe in accordance with ASTM A-53 ERW Grade B using schedule 40 wall thickness and include a 2” x 3” cable opening in the pipe at 18” below the attachment plate. Furnish steel attachment plate, helical blade and stinger rod in accordance with ASTM A-36. Include (4) slotted mounting holes in the attachment plate to fit bolt circles ranging from 10” to 15" diameter. Furnish additional 1-1/4” keyholes at slotted holes to permit anchor bolt installation and replacement from top surface. Include combination bolt-head retainer and dirt scrapers at the attachment plate underside to allow for a level or flush-mount plate installation with respect to the finished grade. Galvanize pipe assembly components in accordance with AASHTO M 111 or an approved equivalent.

Furnish (4) 1"-8NC x 4” galvanized Grade 5 square head anchor bolts. Provide (4) 1” plain flat galvanized washers and (4) 1" galvanized hex nuts. Galvanize in accordance with AASHTO M 111 or an approved equivalent.

Construction Methods for Type II – Normal-Duty Pedestal:

Advance or mechanically screw foundation into soil up until top of attachment plate is level with finished grade. Slide the anchor bolt heads through the keyhole openings and under the attachment plate with threads pointing up. Bolt the pedestal base to the foundation attachment plate.

For further construction methods, see manufacturer’s installation drawings.

Page 17-34, revise Measurement and Payment to sub-Section 1743-5.
Revise the last paragraph to read:

No measurement will be made for pedestal foundations, pedestal screw-in helical foundations, grounding systems and any peripheral pedestal mounting hardware as these are incidental to furnishing and installing pedestals.

2. SIGNAL HEADS

2.1. MATERIALS

A. General:

Fabricate vehicle signal head housings and end caps from die-cast aluminum. Fabricate 16-inch pedestrian signal head housings and end caps from die-cast aluminum. Provide visor mounting

screws, door latches, and hinge pins fabricated from stainless steel. Provide interior screws, fasteners, and metal parts fabricated from stainless steel or corrosion resistant material.

Fabricate tunnel and traditional visors from sheet aluminum.

Paint all surfaces inside and outside of signal housings and doors. Paint outside surfaces of tunnel and traditional visors, messenger cable mounting assemblies, pole and pedestal mounting assemblies, and pedestrian pushbutton housings. Unless otherwise directed by the Engineer, for all vehicle and pedestrian signal heads mounted on mast arms or pedestals (mostly for final signal patterns), have electrostatically-applied, fused-polyester paint in black (Federal Standard 595C, Color Chip Number 17038) a minimum of 2.5 to 3.5 mils thick. For all vehicle signal heads hung on messenger cable (most in temporary patterns only), have electrostatically-applied, fused-polyester paint in highway yellow (Federal Standard 595C, Color Chip Number 13538) a minimum of 2.5 to 3.5 mils thick. At the Contractor's option, black colored signal heads may also be used for all temporary patterns in lieu of highway yellow colored heads if approved by the Engineer in advance. Do not apply paint to the latching hardware or rigid vehicle signal head mounting brackets for mast-arm attachments.

Have the interior surfaces of tunnel and traditional visors painted an alkyd urea black synthetic baking enamel with a minimum gloss reflectance and meeting the requirements of MIL-E-10169, "Enamel Heat Resisting, Instrument Black."

Where required, provide polycarbonate signal heads and visors that comply with the provisions pertaining to the aluminum signal heads listed on the QPL with the following exceptions:

Fabricate signal head housings, end caps, and visors from virgin polycarbonate material. Provide UV stabilized polycarbonate plastic with a minimum thickness of 0.1 ± 0.01 inches that is highway yellow (Federal Standard 595C, Color Chip 13538). Ensure the color is incorporated into the plastic material before molding the signal head housings and end caps. Ensure the plastic formulation provides the following physical properties in the assembly (tests may be performed on separately molded specimens):

Test	**Required**	**Method**
Specific Gravity	1.17 minimum	ASTM D 792
Flammability	Self-extinguishing	ASTM D 635
Tensile Strength, yield, PSI	8500 minimum	ASTM D 638
Izod impact strength, ft-lb/in [notched, 1/8 inch]	12 minimum	ASTM D 256

For pole mounting, provide side of pole mounting assemblies with framework and all other hardware necessary to make complete, watertight connections of the signal heads to the poles and pedestals. Fabricate the mounting assemblies and frames from aluminum with all necessary hardware, screws, washers, etc. to be stainless steel. Provide mounting fittings that match the positive locking device on the signal head with the serrations integrally cast into the brackets. Provide upper and lower pole plates that have a 1 ¼-inch vertical conduit entrance hubs with the hubs capped on the lower plate and 1 ½-inch horizontal hubs. Ensure that the assemblies provide rigid attachments to poles and pedestals so as to allow no twisting or swaying of the signal heads. Ensure that all raceways are free of sharp edges and protrusions, and can accommodate a minimum of ten Number 14 AWG conductors.

For pedestal mounting, provide a post-top slipfitter mounting assembly that matches the positive locking device on the signal head with serrations integrally cast into the slipfitter. Provide stainless

steel hardware, screws, washers, etc. Provide a minimum of six 3/8 X 3/4-inch long square head bolts for attachment to pedestal. Provide a center post for multi-way slipfitters.

For light emitting diode (LED) traffic signal modules, provide the following requirements for inclusion on the Department's Qualified Products List for traffic signal equipment.

1. Sample submittal,
2. Third-party independent laboratory testing results for each submitted module with evidence of testing and conformance with all of the Design Qualification Testing specified in section 6.4 of each of the following Institute of Transportation Engineers (ITE) specifications:
   - Vehicle Traffic Control Signal Heads – Light Emitting Diode (LED) Circular Signal Supplement
   - Vehicle Traffic Control Signal Heads – Light Emitting Diode (LED) Vehicle Arrow Traffic Signal Supplement
   - Pedestrian Traffic Control Signal Indications –Light Emitting Diode (LED) Signal Modules.

   (Note: The Department currently recognizes two approved independent testing laboratories. They are Intertek ETL Semko and Light Metrics, Incorporated with Garwood Laboratories. Independent laboratory tests from other laboratories may be considered as part of the QPL submittal at the discretion of the Department,
3. Evidence of conformance with the requirements of these specifications,
4. A manufacturer's warranty statement in accordance with the required warranty, and
5. Submittal of manufacturer's design and production documentation for the model, including but not limited to, electrical schematics, electronic component values, proprietary part numbers, bill of materials, and production electrical and photometric test parameters.
6. Evidence of approval of the product to bear the Intertek ETL Verified product label for LED traffic signal modules.

In addition to meeting the performance requirements for the minimum period of 60 months, provide a written warranty against defects in materials and workmanship for the modules for a period of 60 months after installation of the modules. During the warranty period, the manufacturer must provide new replacement modules within 45 days of receipt of modules that have failed at no cost to the State. Repaired or refurbished modules may not be used to fulfill the manufacturer's warranty obligations. Provide manufacturer's warranty documentation to the Department during evaluation of product for inclusion on Qualified Products List (QPL).

B. Vehicle Signal Heads:

Comply with the ITE standard "Vehicle Traffic Control Signal Heads". Provide housings with provisions for attaching backplates.

Provide visors that are 10 inches in length for 12-inch vehicle signal heads.

Provide a termination block with one empty terminal for field wiring for each indication plus one empty terminal for the neutral conductor. Have all signal sections wired to the termination block. Provide barriers between the terminals that have terminal screws with a minimum Number 8 thread size and that will accommodate and secure spade lugs sized for a Number 10 terminal screw.

Mount termination blocks in the yellow signal head sections on all in-line vehicle signal heads. Mount the termination block in the red section on five-section vehicle signal heads.

Furnish vehicle signal head interconnecting brackets. Provide one-piece aluminum brackets less than 4.5 inches in height and with no threaded pipe connections. Provide hand holes on the bottom of the brackets to aid in installing wires to the signal heads. Lower brackets that carry no wires and are used only for connecting the bottom signal sections together may be flat in construction.

For messenger cable mounting, provide messenger cable hangers, wire outlet bodies, balance adjusters, bottom caps, wire entrance fitting brackets, and all other hardware necessary to make complete, watertight connections of the vehicle signal heads to the messenger cable. Fabricate mounting assemblies from malleable iron or steel and provide serrated rings made of aluminum. Provide messenger cable hangers and balance adjusters that are galvanized before being painted. Fabricate balance adjuster eyebolt and eyebolt nut from stainless steel or galvanized malleable iron. Provide messenger cable hangers with U-bolt clamps. Fabricate washers, screws, bolts, clevis pins, cotter pins, nuts, and U-bolt clamps from stainless steel.

For mast-arm mounting, provide rigid vehicle signal head mounting brackets and all other hardware necessary to make complete, watertight connections of the vehicle signal heads to the mast arms and to provide a means for vertically adjusting the vehicle signal heads to proper alignment. Fabricate the mounting assemblies from aluminum, and provide serrated rings made of aluminum. Provide stainless steel cable attachment assemblies to secure the brackets to the mast arms. Ensure all fastening hardware and fasteners are fabricated from stainless steel.

Provide LED vehicular traffic signal modules (hereafter referred to as modules) that consist of an assembly that uses LEDs as the light source in lieu of an incandescent lamp for use in traffic signal sections. Use LEDs that are aluminum indium gallium phosphorus (AlInGaP) technology for red and yellow indications and indium gallium nitride (InGaN) for green indications. Install the ultra bright type LEDs that are rated for 100,000 hours of continuous operation from -40°F to +165°F. Design modules to have a minimum useful life of 60 months and to meet all parameters of this specification during this period of useful life.

For the modules, provide spade terminals crimped to the lead wires and sized for a #10 screw connection to the existing terminal block in a standard signal head. Do not provide other types of crimped terminals with a spade adapter.

Ensure the power supply is integral to the module assembly. On the back of the module, permanently mark the date of manufacture (month & year) or some other method of identifying date of manufacture.

Tint the red, yellow and green lenses to correspond with the wavelength (chromaticity) of the LED. Transparent tinting films are unacceptable. Provide a lens that is integral to the unit with a smooth outer surface.

1. LED Circular Signal Modules:

Provide modules in the following configurations: 12-inch circular sections. All makes and models of LED modules purchased for use on the State Highway System shall appear on the current NCDOT Traffic Signal Qualified Products List (QPL).

Provide the manufacturer's model number and the product number (assigned by the Department) for each module that appears on the 2012 or most recent Qualified Products List. In addition, provide manufacturer's certification in accordance with Article 106-3 of the *Standard Specifications*, that

each module meets or exceeds the ITE "Vehicle Traffic Control Signal Heads – Light Emitting Diode (LED) Circular Signal Supplement" dated June 27, 2005 (hereafter referred to as VTCSH Circular Supplement) and other requirements stated in this specification.

Provide modules that meet the following requirements when tested under the procedures outlined in the VTCSH Circular Supplement:

Module Type	Max. Wattage at 165° F	Nominal Wattage at 77° F
12-inch red circular	17	11
12-inch green circular	15	15

For yellow circular signal modules, provide modules tested under the procedures outlined in the VTCSH Circular Supplement to insure power required at 77° F is 22 Watts or less for the 12-inch circular module.

Note: Use a wattmeter having an accuracy of ±1% to measure the nominal wattage and maximum wattage of a circular traffic signal module. Power may also be derived from voltage, current and power factor measurements.

2. LED Arrow Signal Modules

Provide 12-inch omnidirectional arrow signal modules. All makes and models of LED modules purchased for use on the State Highway System shall appear on the current NCDOT Traffic Signal Qualified Products List (QPL).

Provide the manufacturer's model number and the product number (assigned by the Department) for each module that appears on the 2012 or most recent Qualified Products List. In addition, provide manufacturer's certification in accordance with Article 106-3 of the *Standard Specifications,* that each module meets or exceeds the requirements for 12-inch omnidirectional modules specified in the ITE "Vehicle Traffic Control Signal Heads – Light Emitting Diode (LED) Vehicle Arrow Traffic Signal Supplement" dated July 1, 2007 (hereafter referred to as VTCSH Arrow Supplement) and other requirements stated in this specification.

Provide modules that meet the following requirements when tested under the procedures outlined in the VTCSH Arrow Supplement:

Module Type	Max. Wattage at 165° F	Nominal Wattage at 77° F
12-inch red arrow	12	9
12-inch green arrow	11	11

For yellow arrow signal modules, provide modules tested under the procedures outlined in the VTCSH Arrow Supplement to insure power required at 77° F is 12 Watts or less.

Note: Use a wattmeter having an accuracy of ±1% to measure the nominal wattage and maximum wattage of an arrow traffic signal module. Power may also be derived from voltage, current and power factor measurements.

3. LED U-Turn Arrow Signal Modules:

Provide modules in the following configurations: 12-inch left u-turn arrow signal modules.

Modules are not required to be listed on the ITS and Signals Qualified Products List. Provide manufacturer's certification in accordance with Article 106-3 of the *Standard Specifications,* that each module meets or exceeds the ITE "Vehicle Traffic Control Signal Heads – Light Emitting Diode (LED) Circular Signal Supplement" dated June 27, 2005 (hereafter referred to as VTCSH Circular Supplement) and other requirements stated in this specification.

Provide modules that have minimum maintained luminous intensity values that are not less than 16% of the values calculated using the method described in section 4.1 of the VTCSH Circular Supplement.

Provide modules that meet the following requirements when tested under the procedures outlined in the VTCSH Circular Supplement:

Module Type	Max. Wattage at 165° F	Nominal Wattage at 77° F
12-inch red u-turn arrow	17	11
12-inch green u-turn arrow	15	15

For yellow u-turn arrow signal modules, provide modules tested under the procedures outlined in the VTCSH Circular Supplement to ensure power required at 77° F is 22 Watts or less.

Note: Use a wattmeter having an accuracy of ±1% to measure the nominal wattage and maximum wattage of a circular traffic signal module. Power may also be derived from voltage, current and power factor measurements.

C. Pedestrian Signal Heads:

Provide pedestrian signal heads with international symbols that meet the MUTCD. Do not provide letter indications.

Comply with the ITE standard for "Pedestrian Traffic Control Signal Indications" and the following sections of the ITE standard for "Vehicle Traffic Control Signal Heads" in effect on the date of advertisement:

- Section 3.00 - "Physical and Mechanical Requirements"
- Section 4.01 - "Housing, Door, and Visor: General"
- Section 4.04 - "Housing, Door, and Visor: Materials and Fabrication"
- Section 7.00 - "Exterior Finish"

Provide a double-row termination block with three empty terminals and number 10 screws for field wiring. Provide barriers between the terminals that accommodate a spade lug sized for number 10 terminal screws. Mount the termination block in the hand section. Wire all signal sections to the terminal block.

Where required by the plans, provide 16-inch pedestrian signal heads with traditional three-sided, rectangular visors, 6 inches long.

Provide 2-inch diameter pedestrian push-buttons with weather-tight housings fabricated from die-cast aluminum and threading in compliance with the NEC for rigid metal conduit. Provide a weep hole in the housing bottom and ensure that the unit is vandal resistant.

Provide push-button housings that are suitable for mounting on flat or curved surfaces and that will accept 1/2-inch conduit installed in the top. Provide units that have a heavy duty push-button assembly with a sturdy, momentary, normally-open switch. Have contacts that are electrically

insulated from the housing and push-button. Ensure that the push-buttons are rated for a minimum of 5 mA at 24 volts DC and 250 mA at 12 volts AC.

Provide standard R10-3 signs with mounting hardware that comply with the MUTCD in effect on the date of advertisement. Provide R10-3E signs for countdown pedestrian heads and R10-3B for non-countdown pedestrian heads.

Design the LED pedestrian traffic signal modules (hereafter referred to as modules) for installation into standard pedestrian traffic signal sections that do not contain the incandescent signal section reflector, lens, eggcrate visor, gasket, or socket. Provide modules that consist of an assembly that uses LEDs as the light source in lieu of an incandescent lamp. Use LEDs that are of the latest aluminum indium gallium phosphorus (AlInGaP) technology for the Portland Orange hand and countdown displays. Use LEDs that are of the latest indium gallium nitride (InGaN) technology for the Lunar White walking man displays. Install the ultra-bright type LEDs that are rated for 100,000 hours of continuous operation from -40°F to +165°F. Design modules to have a minimum useful life of 60 months and to meet all parameters of this specification during this period of useful life.

Design all modules to operate using a standard 3 - wire field installation. Provide spade terminals crimped to the lead wires and sized for a #10 screw connection to the existing terminal block in a standard pedestrian signal housing. Do not provide other types of crimped terminals with a spade adapter.

Ensure the power supply is integral to the module assembly. On the back of the module, permanently mark the date of manufacture (month & year) or some other method of identifying date of manufacture.

Provide modules in the following configuration: 16-inch displays which have the solid hand/walking man overlay on the left and the countdown on the right. All makes and models of LED modules purchased for use on the State Highway System shall appear on the current NCDOT Traffic Signal Qualified Products List (QPL).

Provide the manufacturer's model number and the product number (assigned by the Department) for each module that appears on the 2012 or most recent Qualified Products List. In addition, provide manufacturer's certification in accordance with Article 106-3 of the *Standard Specifications*, that each module meets or exceeds the ITE "Pedestrian Traffic Control Signal Indicators - Light Emitting Diode (LED) Signal Modules" dated August 04, 2010 (hereafter referred to as PTCSI Pedestrian Standard) and other requirements stated in this specification.

Provide modules that meet the following requirements when tested under the procedures outlined in the PTCSI Pedestrian Standard:

Module Type	Max. Wattage at 165° F	Nominal Wattage at 77° F
Hand Indication	16	13
Walking Man Indication	12	9
Countdown Indication	16	13

Note: Use a wattmeter having an accuracy of ±1% to measure the nominal wattage and maximum wattage of a circular traffic signal module. Power may also be derived from voltage, current and power factor measurements.

Provide module lens that is hard coated or otherwise made to comply with the material exposure and weathering effects requirements of the Society of Automotive Engineers (SAE) J576. Ensure all exposed components of the module are suitable for prolonged exposure to the environment, without appreciable degradation that would interfere with function or appearance.

Ensure the countdown display continuously monitors the traffic controller to automatically learn the pedestrian phase time and update for subsequent changes to the pedestrian phase time.

Ensure the countdown display begins normal operation upon the completion of the preemption sequence and no more than one pedestrian clearance cycle.

D. Signal Cable:

Furnish 16-4 and 16-7 signal cable that complies with IMSA specification 20-1 except provide the following conductor insulation colors:

- For 16-4 cable: white, yellow, red, and green
- For 16-7 cable: white, yellow, red, green, yellow with black stripe tracer, red with black stripe tracer, and green with black stripe tracer. Apply continuous stripe tracer on conductor insulation with a longitudinal or spiral pattern.

Provide a ripcord to allow the cable jacket to be opened without using a cutter. IMSA specification 19-1 will not be acceptable. Provide a cable jacket labeled with the IMSA specification number and provide conductors constructed of stranded copper.

3. MODIFY SPREAD SPECTRUM WIRELESS RADIO

3.1. DESCRIPTION

Make modifications to existing Spread Spectrum Radio installations.

3.2. MATERIALS

Material, equipment, and hardware furnished under this section shall be pre-approved on the Departments' QPL.

Reference Article 1098-18 "Spread Spectrum Wireless Radio" of the Standard Specifications for Roads and Structures.

3.3. CONSTRUCTION METHODS

This item of work involves making modifications to existing wireless installations which include relocating an existing radio from an existing cabinet to a new cabinet, and/or relocating existing components of the radio system from an existing pole to new poles (wood poles, metal strain poles, metal poles with mast arms, etc.). This item of work includes, but may not be limited to, the following:

- Relocating existing radio from an existing cabinet to a new cabinet
- Relocating or installing new Coaxial Cable
- Furnishing and installing new N-Type Connectors
- Furnishing new Coaxial Cable and Shield Grounding Kits
- Relocating Antenna Mounting Hardware
- Relocating Antennas

This item of work may also involve converting an existing standalone radio site to a repeater site. This item of work includes, but may not be limited to, the following:

- Furnishing and installing new antenna(s)
- Furnishing and installing new antenna mounting hardware kits
- Furnishing and installing new 6 foot coaxial cable jumpers with N-Type Connectors
- Furnishing and installing new coaxial cable – power divider (Splitters)

3.4. MEASUREMENT AND PAYMENT

Modify Radio Installation will be measured as the actual number of modified radio installations that are modified and accepted.

This item includes relocating the radio, and furnishing and/or relocating and installing coaxial cable, N-Type Connectors, coaxial cable shield grounding kits, antenna mounting hardware, antennas, coaxial cable and power dividers. This item of work may also involve furnishing and installing new decals and furnishing or relocating signs. This item of work may also involve re-programming the radio.

Payment for new risers will be covered separately.

Payment will be made under:

Modify Radio Installation .....Each

4. TRAFFIC SIGNAL SUPPORTS

4.1. METAL TRAFFIC SIGNAL SUPPORTS – ALL POLES

A. General:

Furnish and install metal strain poles and metal poles with mast arms, grounding systems, and all necessary hardware. The work covered by this special provision includes requirements for the design, fabrication, and installation of both standard and custom/site specifically designed metal traffic signal supports and associated foundations.

Provide metal traffic signal support systems that contain no guy assemblies, struts, or stay braces. Provide designs of completed assemblies with hardware that equals or exceeds AASHTO *Standard Specifications for Structural Supports for Highway Signs, Luminaires and Traffic Signals* 5th Edition, 2009 (hereafter called 5th Edition AASHTO), including the latest interim specifications. Provide assemblies with a round or near-round (18 sides or more) cross-section, or a multi sided cross section with no less than six sides. The sides may be straight, convex, or concave.

Pole heights shown on signal plans are estimated from available data for bid purposes. Prior to furnishing metal signal poles, use field measurements and adjusted cross-sections to determine whether pole heights are sufficient to obtain required clearances. If pole heights are not sufficient, the Contractor should immediately notify the Engineer of the required revised pole heights.

Ensure that metal signal poles permit cables to be installed inside poles and any required mast arms. For holes in the poles and arms used to accommodate cables, provide full-circumference grommets. Arm flange plate wire access holes should be deburred, non grommeted, and oversized to fit around the 2” diameter grommeted shaft flange plate wire access hole.

After fabrication, have steel poles, required mast arms, and all parts used in the assembly hot-dip galvanized per section 1076. Design structural assemblies with weep holes large enough and

properly located to drain molten zinc during the galvanization process. Provide hot-dip galvanizing on structures that meets or exceeds ASTM Standard A-123. Provide galvanizing on hardware that meets or exceeds ASTM Standard A-153. Ensure that threaded material is brushed and retapped as necessary after galvanizing. Perform repair of damaged galvanizing that complies with the following:

Repair of Galvanizing.....Article 1076-7

Standard Drawings for Metal Poles are available that supplement these project special provisions. These drawings are located on the Department's website:

https://connect.ncdot.gov/resources/safety/pages/ITS-Design-Resources.aspx

Comply with article 1098-1B of the *2012 STANDARD SPECIFICATIONS FOR ROADS & STRUCTURES*, hereinafter referred to as the *Standard Specifications* for submittal requirements. Furnish shop drawings for approval. Provide the copies of detailed shop drawings for each type of structure as summarized below. Ensure that shop drawings include material specifications for each component and identify welds by type and size on the detail drawing only, not in table format. **Do not release structures for fabrication until shop drawings have been approved by NCDOT**. Provide an itemized bill of materials for all structural components and associated connecting hardware on the drawings.

Comply with article 1098-1A of the *Standard Specifications* for Qualified Products List (QPL) submittals. All shop drawings must include project location description, signal inventory number(s) and a project number or work order number on the drawings.

Summary of information required for metal pole review submittal:

Item	**Hardcopy Submittal**	**Electronic Submittal**	**Comments / Special Instructions**
Sealed, Approved Signal Plan/Loading Diagram	1	1	All structure design information needs to reflect the latest approved signal plans
Custom Pole Shop Drawings	4 sets	1 set	Show NCDOT inventory number(s), contractor's name and relevant revision number in the title block. All drawings must have a unique drawing number for each project and identified for multiple pages.
Standard Pole Shop Drawings (from the QPL)	4 sets	1 set	Submit drawings on 11" x 17" format media. Show NCDOT inventory number(s), contractor's name and relevant revision number in the title block. All drawings must have a unique drawing number for each project and identified for multiple pages.
Structure Calculations	1 set	1 set	Not required for Standard QPL Poles
Standard Pole Foundation Drawings	1 set	1 set	Submit drawings on 11" x 17" format media. Submit a completed Standard Foundation Selection form for each pole using foundation table on Metal Pole Drawing M-8.
Custom Foundation	4 sets	1 set	Submit drawings on 11" x 17" format media.

Drawings			Show NCDOT inventory number(s), contractor's name and relevant revision number in the title block. All drawings must have a unique drawing number for each project and identified for multiple pages. If QPL Poles are used, include the corresponding QPL pole shop drawings with this submittal.
Foundation Calculations	1	1	**Submit copies of LPILE input, output and pile tip deflection graph per Section 11.4 of this specification for each foundation.** Not required for Standard QPL Poles
Soil Boring Logs and Report	1	1	Report should include a location plan and a soil classification report including soil capacity, water level, hammer efficiency, soil bearing pressure, soil density, etc. for each pole.

NOTE – All shop drawings and custom foundation design drawings must be sealed by a Professional Engineer licensed in the state of North Carolina. All geotechnical information must be sealed by either a Professional Engineer or geologist licensed in the state of North Carolina. Include a title block and revision block on the shop drawings and foundation drawings showing the NCDOT inventory number.

Shop drawings and foundation drawings may be submitted together or separately for approval. However, shop drawings must be approved before foundations can be reviewed. Foundation designs will be returned without review if the associated shop drawing has not been approved. Incomplete submittals will be returned without review. The Reviewer has the right to request additional analysis and copies of the calculations to expedite the approval process.

B. Materials:

Fabricate metal pole and arm shaft from coil or plate steel to meet the requirements of ASTM A 595 Grade A tubes. For structural steel shapes, plates and bars use A572 Gr 50 min or ASTM A709 Gr 50 min. Provide pole and arm shafts that are round in cross section or multisided tubular shapes and have a uniform linear taper of 0.14 in/ft. Construct shafts from one piece of single ply plate or coil so there are no circumferential weld splices. Galvanize in accordance with AASHTO M 111 or an approved equivalent.

Use the submerged arc process or other NCDOT previously approved process suitable for pole shaft and arms to continuously weld pole shafts and arm shafts along their entire length. The longitudinal seam weld will be finished flush to the outside contour of the base metal. Ensure shafts have no circumferential welds except at the lower end joining the shaft to the pole base and arm base. Provide welding that conforms to Article 1072-18 of the *Standard Specifications*, except that no field welding on any part of the pole will be permitted unless approved by a qualified engineer.

Refer to Metal Pole Standard Drawing Sheets M2 through M5 for fabrication details. Fabricate anchor bases from plate steel meeting, as a minimum, the requirements of ASTM A 36M or cast steel meeting the requirements of ASTM A 27M Grade 485-250, AASHTO M270 Gr 36 or an approved equivalent. Conform to the applicable bolt pattern and orientation as shown on Metal Pole Standard Drawing Sheet M2.

Ensure all hardware is galvanized steel or stainless steel. The Contractor is responsible for ensuring that the designer/fabricator specifies connecting hardware and/or materials that do not create a dissimilar metal corrosive reaction.

Provide a minimum of four (4) 1-1/2" diameter high strength bolts for connection between arm plate and pole plate. Increase number of bolts to six (6) 1-1/2" diameter high strength bolts when arm lengths are greater than 50’-0” long.

Unless otherwise required by the design, ensure each anchor rod is 2” diameter and 60” length. Provide 10” minimum thread projection at the top of the rod, and 8” minimum at the bottom of the rod. Use anchor rod assembly and drilled pier foundation materials that meet the *Foundations and Anchor Rod Assemblies for Metal Poles* provision.

For each structural bolt and other steel hardware, hot dip galvanizing shall conform to the requirements of AASHTO M 232 (ASTM A 153). Ensure end caps for poles or mast arms are constructed of cast aluminum conforming to Aluminum Alloy 356.0F.

Provide a circular anchor bolt lock plate that will be secured to the anchor bolts at the embedded end with 2 washers and 2 nuts. Provide a base plate template that matches the bolt circle diameter of the anchor bolt lock plate. Construct plates and templates from ¼” minimum thick steel with a minimum width of 4”. Galvanizing is not required for both plates.

Provide 4 heavy hex nuts and 4 flat washers for each anchor bolt. For nuts, use AASHTO M291 grade 2H, DH, or DH3 or equivalent material. For flat washers, use AASHTO M293 or equivalent material.

C. Construction Methods:

Erect signal support poles only after concrete has attained a minimum allowable compressive strength of 3000 psi. Install anchor rod assemblies in accordance with the *Foundations and Anchor Rod Assemblies for Metal Poles* provision.

For further construction methods, see construction methods for Metal Pole with Mast Arm.

Connect poles to grounding electrodes and bond them to the electrical service grounding electrodes.

For holes in the poles used to accommodate cables, install grommets before wiring pole or arm. Do not cut or split grommets.

Attach the terminal compartment cover to the pole by a sturdy chain or cable. Ensure the chain or cable is long enough to permit the cover to hang clear of the compartment opening when the cover is removed, and is strong enough to prevent vandalism. Ensure the chain or cable will not interfere with service to the cables in the pole base.

Attach cap to pole with a sturdy chain or cable. Ensure the chain or cable is long enough to permit the cap to hang clear of the opening when the cap is removed.

Perform repair of damaged galvanizing that complies with the *Standard Specifications*, Article 1076-7 “Repair of Galvanizing.”

Install galvanized wire mesh around the perimeter of the base plate to cover the gap between the base plate and top of foundation for debris and pest control.

Install a ¼" thick plate for concrete foundation tag to include: concrete grade, depth, diameter, and reinforcement sizes of the installed foundation.

4.2. METAL POLE UPRIGHTS (VERTICAL MEMBERS)

A. Materials:

- Provide tapered tubular shafts and fabricated of steel conforming to ASTM A-595 Grade A or an approved equivalent.
- Hot-dip galvanize poles in accordance with AASHTO M 111 or an approved equivalent.
- Have shafts that are continuously welded for the entire length by the submerged arc process, and with exposed welds ground or rolled smooth and flush with the base metal. Provide welding that conforms to Article 1072-18 of the *Standard Specification* except that no field welding on any part of the pole will be permitted.
- Have Shafts with no circumferential welds except at the lower end joining the shaft to the base.
- Have anchor bases for steel poles fabricated from plate steel meeting as a minimum the requirements of ASTM A 36M or cast steel meeting the requirements of ASTM A 27M Grade 485-250 or an approved equivalent.

Provide a grounding lug(s) in the approximate vicinity of the messenger cable clamp for bonding and grounding messenger cable. Lugs must accept #4 or #6 AWG wire to bond messenger cables to the pole in order to provide an effective ground fault circuit path. Refer to Metal Pole Standard Drawing Sheet M6 for construction details.

Have poles permanently stamped above the hand holes with the identification tag details as shown on Metal Pole Standard Drawing Sheet M2.

Provide liquid tight flexible metal conduit (Type LFMC), liquid tight flexible nonmetallic conduit (Type LFNC), high density polyethylene conduit (Type HDPE), or approved equivalent to isolate conductors feeding luminaires.

Fabricate poles from a single piece of steel or aluminum with single line seam weld with no transverse butt welds. Fabrication of two ply pole shafts is unacceptable with the exception of fluted shafts. Provide tapers for all shafts that begin at base and that have diameters which decrease uniformly at the rate of not more than 0.14 inch per foot (11.7 millimeters per meter) of length.

Provide four anchor nuts and four washers for each anchor bolt. Ensure that anchor bolts have required diameters, lengths, and positions, and will develop strengths comparable to their respective poles.

Provide a terminal compartment with cover and screws in each pole that encompasses the hand hole and contains a 12-terminal barrier type terminal block. Provide two terminal screws with a removable shorting bar between them for each termination. Furnish terminal compartment covers attached to the pole by a sturdy chain or cable approved by the Engineer. Ensure that the chain or cable is long enough to permit the cover to hang clear of the compartment opening when the cover is removed, and is strong enough to prevent vandals from being able to disconnect the cover from the pole. Ensure that the chain or cable will not interfere with service to the cables in the pole base.

Install grounding lugs that will accept #4 or #6 AWG wire to electrically bond messenger cables to the pole. Refer to Metal Pole Standard Drawing Sheet M6 for construction details.

For each pole, provide a 1/2 inch minimum thread diameter, coarse thread stud and nut for grounding which will accommodate #6 AWG ground wire. Ensure that the lug is electrically bonded to the pole and is conveniently located inside the pole at the hand hole.

Provide a removable pole cap with stainless steel attachment screws for the top of each pole. Ensure that the cap is cast aluminum conforming to Aluminum Association Alloy 356.0F. Furnish cap attached to the pole with a sturdy chain or cable approved by the Engineer. Ensure that the chain or cable is long enough to permit the cap to hang clear of the pole-top opening when the cap is removed.

When required by the plans, furnish couplings 42 inches above the bottom of the base for mounting of pedestrian pushbuttons. Provide mounting points consisting of 1-1/2 inch internally threaded half-couplings that comply with the NEC and that are mounted within the poles. Ensure that couplings are essentially flush with the outside surfaces of the poles and are installed before any required galvanizing. Provide a threaded plug in each mounting point. Ensure that the surface of the plug is essentially flush with the outer end of the mounting point when installed and has a recessed hole to accommodate a standard wrench.

4.3. MAST ARM POLE SHAFTS

Ensure that allowable pole deflection does not exceed that allowed per 5th Edition AASHTO. Ensure that maximum angular rotation of the top of the mast arm pole does not exceed 1 degree 40 minutes (1°40').

A. Construction Methods:

Install metal poles, hardware, and fittings as shown on the manufacturer's installation drawings. Install metal poles so that when the pole is fully loaded it is within 1 degree 40 minutes (1°40') of vertical. Install poles with the manufacturer's recommended "rake." Use threaded leveling nuts to establish rake if required.

4.4. MAST ARMS

Provide pole plates and associated gussets and fittings for attachment of required mast arms. As part of each mast arm attachment, provide a cable passage hole in the pole to allow passage of signal cables from the pole to the arm.

Ensure that allowable mast arm deflection does not exceed that allowed per 5th Edition AASHTO. Also when arm is fully loaded, tip of the arm shall not go below the arm attachment point with the pole for all load conditions per 5th Edition AASHTO.

Furnish all arm plates and necessary attachment hardware, including bolts and brackets.

Provide two extra bolts for each arm.

Provide grommet holes on the arms to accommodate cables for the signals.

Provide arms with weatherproof connections for attaching to the shaft of the pole.

Provide hardware that is galvanized steel, stainless steel, or corrosive-resistant aluminum.

Provide a removable end cap with stainless steel attachment screws for the end of each mast arm. Ensure that the cap is cast aluminum conforming to Aluminum Association Alloy 356.0F. Furnish cap attached to the arm with a sturdy chain or cable approved by the Engineer. Ensure that the chain

or cable is long enough to permit the cap to hang clear of the arm end opening when the cap is removed.

Comply with the following for Steel Luminaire Arms:

- In addition to tapered tube, luminaire arms may be standard weight black steel pipe conforming to ASTM A 53-90a, Type E or Type S, Grade B or an approved equivalent.
- Conform to the welding requirements of the steel poles.
- After all fabricating, cutting, punching, and welding are completed, luminaire arms should be hot-dipped galvanized inside and outside.
- In accordance with the National Electrical Code (NEC) Article 230.2(E), provide identification of the electrical source provider for the luminaire feeder circuit with contact information on a permanent label located in the pole hand hole in the vicinity of the feeder circuit raceway.

A. Materials:

After all fabricating, cutting, punching, and welding are completed, hot-dip galvanize the structure in accordance with the AASHTO M 111 or an approved equivalent.

B. Construction Methods:

Install horizontal-type arms with sufficient manufactured rise to keep arm from deflecting below the arm attachment height.

Attach cap to the mast arm with a sturdy chain or cable. Ensure that the chain or cable is long enough to permit the cap to hang clear of the arm opening when the cap is removed.

For mast arm poles, use full penetration welds with back-up ring at the pole base and at the arm base connection.

4.5. DRILLED PIER FOUNDATIONS FOR METAL TRAFFIC SIGNAL POLES

Analysis procedures and formulas shall be based on AASHTO 5th Edition, latest ACI code and the *Drilled Shafts: Construction Procedures and Design Methods* FHWA-IF99-025 manual. Design methods based on engineering publications or research papers needs to have prior approval from NCDOT. The Department reserves the right to accept or disapprove any method used for the analysis.

Use a Factor of Safety of 1.33 for torsion and 2.0 for bending for the foundation design.

Foundation design for lateral load shall not exceed 1” lateral deflection at top of foundation.

For lateral analysis, use LPILE Plus V6.0 or later. Inputs, results and corresponding graphs are to be submitted with the design calculations.

Skin Friction is to be calculated using the α-method for cohesive soils and the β-method for cohesion-less soils (**Broms method will not be accepted**). Detailed descriptions of the “α” and “β” methods can be found in *FHWA-IF-99-025*.

Omit first 2.5ft for cohesive soils when calculating skin friction.

When extreme loading and poor soil conditions are encountered, the one diameter length omitted from the shaft depth calculations (per FHWA-1F-99-025) may be added back in for Torsion calculations (with prior NCDOT approval).

When hammer efficiency is not provided, assume a value of 0.70.

Design all custom foundations to carry the maximum capacity of each metal pole. For standard case strain poles only, if a custom foundation is designed, use the actual shear, axial and moment reactions from the Standard Foundation Selection Table shown on Standard Drawing No. M8.

When poor soil conditions are encountered which could create an excessively large foundation design, consideration may be given to allowing an exemption to the maximum capacity design. The contractor must gain approval from the engineer before reducing a foundation's capacity. On projects where poor soil is known to be present, it is advisable that the contractor consider getting foundations approved before releasing poles for fabrication.

Have the contractor notify the engineer if the proposed foundation is to be installed on a slope other than 8H: 1V or flatter.

A. Description:

Furnish and install foundations for NCDOT metal poles with all necessary hardware in accordance with the plans and specifications.

Metal Pole Standards have been developed and implemented by NCDOT for use at signalized intersections in North Carolina. If the plans call for a standard pole, then a standard foundation may be selected from the plans. However, the Contractor is not required to use a standard foundation. If the Contractor chooses to design a non-standard site-specific foundation for a standard pole or if the plans call for a non-standard site-specific pole, design the foundation to conform to the applicable provisions in the NCDOT Metal Pole Standard Drawings and Section B7 (Non-Standard Foundation Design) below. If non-standard site specific foundations are designed for standard QPL approved strain poles, the foundation designer must use the design moment specified by load case on Metal Pole Standard Drawing Sheet M8. Failure to conform to this requirement will be grounds for rejection of the design.

If the Contractor chooses to design a non-standard foundation for a standard pole and the soil test results indicate a standard foundation is feasible for the site, the Contractor will be paid the cost of the standard foundation (drilled pier and wing wall, if applicable). Any additional costs associated with a non-standard site-specific foundation including additional materials, labor and equipment will be considered incidental to the cost of the standard foundation. All costs for the non-standard foundation design will also be considered incidental to the cost of the standard foundation.

B. Soil Test and Foundation Determination:

1. General:

Drilled piers are reinforced concrete sections, cast-in-place against in situ, undisturbed material. Drilled piers are of straight shaft type and vertical.

Some standard drilled piers for supporting poles with mast arms may require wing walls to resist torsional rotation. Based upon this provision and the results of the required soil test, a drilled pier length and wing wall requirement may be determined and constructed in accordance with the plans.

For non-standard site-specific poles, the contractor-selected pole fabricator will determine if the addition of wing walls is necessary for the supporting foundations.

2. Soil Test:

Perform a soil test at each proposed metal pole location. Complete all required fill placement and excavation at each signal pole location to finished grade before drilling each boring. Soil tests performed that are not in compliance with this requirement may be rejected and will not be paid. Drill one boring to a depth of 26 feet within a 25 foot radius of each proposed foundation.

Perform standard penetration tests (SPT) in accordance with ASTM D 1586 at depths of 1, 2.5, 5, 7.5, 10, 15, 20 and 26 feet. Discontinue the boring if one of the following occurs:

- A total of 100 blows have been applied in any 2 consecutive 6-in. intervals.
- A total of 50 blows have been applied with < 3-in. penetration.

Describe each intersection as the "Intersection of *(Route or SR #)*, *(Street Name)* and *(Route or SR #)*, *(Street Name)*, _____ County, Signal Inventory No. _____". Label borings with "B- *N, S, E, W, NE, NW, SE or SW*" corresponding to the quadrant location within the intersection. Pole numbers should be made available to the Drill Contractor. Include pole numbers in the boring label if they are available. If they are not available, ensure the boring labels can be cross-referenced to corresponding pole numbers. For each boring, submit a legible (hand written or typed) boring log signed and sealed by a licensed Geologist or Professional Engineer registered in North Carolina. Include on each boring the SPT blow counts and N-values at each depth, depth of the boring, hammer efficiency, depth of water table and a general description of the soil types encountered using the AASHTO Classification System.

3. Standard Foundation Determination:

Use the following method for determining the Design N-value:

$$N_{AVG} = \frac{(N@1' + N@2.5' + \ldots\ldots\ldots N@\text{Deepest Boring Depth})}{\text{Total Number of N-values}}$$

$$Y = (N@1')^2 + (N@2.5')^2 + \ldots\ldots\ldots (N@\text{Deepest Boring Depth})^2$$

$$Z = (N@1' + N@2.5' + \ldots\ldots\ldots N@\text{Deepest Boring Depth})$$

$$N_{STD\ DEV} = \left(\frac{(\text{Total Number of N-values} \times Y) - Z^2}{(\text{Total Number of N-values}) \times (\text{Total Number of N-values} - 1)} \right)^{0.5}$$

Design N-value equals lesser of the following two conditions:

$N_{AVG} - (N_{STD\ DEV} \times 0.45)$

Or

$$\text{Average of First Four N-Values} = \frac{(N@1' + N@2.5' + N@5' + N@7.5')}{4}$$

Note: If less than 4 N-values are obtained because of criteria listed in Section 2 above, use average of N-values collected for second condition. Do not include the N-value at the deepest boring depth for above calculations if the boring is discontinued at or before the required boring depth because of criteria listed in Section 2 above. Use N-value of zero for weight of hammer or weight of rod. If N-value is greater than 50, reduce N-value to 50 for calculations.

If standard NCDOT strain poles are shown on the plans and the Contractor chooses to use standard foundations, determine a drilled pier length, "L," for each signal pole from the Standard Foundations Chart (sheet M 8) based on the Design N-value and the predominant soil type. For each standard pole location, submit a completed "Metal Pole Standard Foundation Selection Form" signed by the Contractor's representative. Signature on form is for verification purposes only. Include the Design N-value calculation and resulting drilled pier length, "L," on each form.

If non-standard site-specific poles are shown on the plans, submit completed boring logs collected in accordance with Section 2 (Soil Test) above along with pole loading diagrams from the plans to the contractor-selected pole fabricator to assist in the pole and foundation design.

If one of the following occurs, the Standard Foundations Chart shown on the plans may not be used and a non-standard foundation may be required. In such case, contact the Engineer.

- The Design N-value is less than 4.
- The drilled pier length, "L", determined from the Standard Foundations Chart, is greater than the depth of the corresponding boring.

In the case where a standard foundation cannot be used, the Department will be responsible for the additional cost of the non-standard foundation.

Foundation designs are based on level ground around the traffic signal pole. If the slope around the edge of the drilled pier is steeper than 8:1 (H:V) or the proposed foundation will be less than 10 feet from the top of an embankment slope, the Contractor is responsible for providing slope information to the foundation designer and to the Engineer so it can be considered in the design.

The "Metal Pole Standard Foundation Selection Form" may be found at:

http://www.ncdot.gov/doh/preconstruct/highway/geotech/formdet/misc/MetalPole.pdf

If assistance is needed, contact the Engineer.

4. Non-Standard Foundation Design:

Design non-standard foundations based upon site-specific soil test information collected in accordance with Section 2 (Soil Test) above. Design drilled piers for side resistance only in accordance with Section 4.6 of the *AASHTO Standard Specifications for Highway Bridges*. Use the computer software LPILE version-6.0 or later manufactured by Ensoft, Inc. to analyze drilled piers. Use the computer software gINT V8i or later manufactured by Bentley Systems, Inc. with the current NCDOT gINT library and data template to produce SPT boring logs. Provide a drilled pier foundation for each pole with a length and diameter that result in a horizontal lateral movement of less than 1 inch at the top of the pier and a horizontal rotational movement of less than 1 inch at the edge of the pier. Contact the Engineer for pole loading diagrams for standard poles to be used for non-standard foundation designs. Submit any non-standard foundation designs including drawings, calculations, and soil boring logs to the Engineer for review and approval before construction.

C. Drilled Pier Construction:

Construct drilled pier foundations in accordance with the *Foundations and Anchor Rod Assemblies for Metal Poles* provision.

4.6. CUSTOM DESIGN OF TRAFFIC SIGNAL SUPPORTS

A. General:

Design traffic signal supports with foundations consisting of metal poles with mast arms.

The lengths of the metal signal poles shown on the plans are estimated from available data for bid purposes. Determine the actual length of each pole from field measurements and adjusted cross-sections. Furnish the revised pole heights to the Engineer. Use all other dimensional requirements shown on the plans.

Ensure each pole includes an identification tag with information and location positions as defined on Metal Pole Standard Drawing Sheets M2, M3 and M4. All pole shaft tags must include the NCDOT Inventory number followed by the pole number shown on the traffic signal or ITS (non-signalized locations) plan.

Design all traffic signal support structures using the following 5th Edition AASHTO specifications:

- Design for a 50 year service life as recommended by Table 3-3.
- Use the wind pressure map developed from 3-second gust speeds, as provided in Article 3.8.
- Ensure signal support structures include natural wind gust loading and truck-induced gust loading in the fatigue design, as provided for in Articles 11.7.3 and 11.7.4, respectively. Designs need not consider periodic galloping forces.
- Assume the natural wind gust speed in North Carolina is 11.2 mph. For natural wind fatigue stress calculations, utilize a drag coefficient (C_d) computed for 11.2 mph wind velocity and not the basic wind speed velocity.
- Design for Category II fatigue, as provided for in Article 11.6, unless otherwise specified.
- Calculate all stresses using applicable equations from Section 5. The Maximum allowable stress ratios for all signal support designs are 0.9.
- Conform to article 10.4.2 and 11.8 for all deflection requirements.

Ensure that the design permits cables to be installed inside poles and mast arms.

Unless otherwise specified by special loading criteria, the computed surface area for ice load on signal heads is:

- 3-section, 12-inch, Surface area: 26.0 ft^2 (17.0 ft^2 without back plate)
- 4-section, 12-inch, Surface area: 32.0 ft^2 (21.0 ft^2 without back plate)
- 5-section, 12-inch, Surface area: 42.0 ft^2 (29.0 ft^2 without back plate)

The ice loading for signal heads defined above includes the additional surface area that back plates will induce. Special loading criteria may be specified in instances where back plates will not be installed on signal heads. Refer to the Loading Schedule on each Metal Pole Loading Diagram for revised signal head surface areas. The pole designer should revise ice loads accordingly in this instance. Careful examination of the plans when this is specified is important as this may impact

sizing of the metal support structure and foundation design which could affect proposed bid quotes. All maximum stress ratios of 0.9 still apply.

Assume the combined minimum weight of a messenger cable bundle (including messenger cable, signal cable and detector lead-in cables) is 1.3 lbs/ft. Assume the combined minimum diameter of this cable bundle is 1.3 inches.

Ensure that designs provide a removable pole cap with stainless steel attachment screws for each pole top and mast arm end.

B. Metal Poles:

Submit design drawings for approval including pre-approved QPL pole drawings. Show all the necessary details and calculations for the metal poles including the foundation and connections. Include NCDOT inventory number on design drawings. Include as part of the design calculations the ASTM specification numbers for the materials to be used. Provide the types and sizes of welds on the design drawings. Include a Bill of Materials on design drawings. Ensure design drawings and calculations are signed, dated, and sealed by the responsible professional engineer licensed in the state of North Carolina. Immediately bring to the attention of the Engineer any structural deficiency that becomes apparent in any assembly or member of any assembly as a result of the design requirements imposed by these specifications, the plans, or the typical drawings. Said Professional Engineer is wholly responsible for the design of all poles and arms. Review and acceptance of these designs by the Department does not relieve the said Professional Engineer of his responsibility. **Do not fabricate the assemblies until receipt of the Department's approval of the design drawings.**

For mast arm poles, provide designs with provisions for pole plates and associated gussets and fittings for mast arm attachment. As part of each mast arm attachment, provide a grommeted 2" diameter hole on the shaft side of the connection to allow passage of the signal cables from the pole to the arm.

Where ice is present, assume wind loads as shown in Figure 3-5 of the 5th Edition AASHTO Specification for Group III loading.

Provide a grounding lug(s) in the approximate vicinity of the messenger cable clamp for bonding and grounding messenger cable. Lugs must accept #4 or #6 AWG wire to bond messenger cables to the pole in order to provide an effective ground fault circuit path. Refer to Metal Pole Standard Drawing Sheet M6 for construction details.

Design tapers for all pole shafts that begin at the base with diameters that decrease uniformly at the rate of 0.14 inch per foot of length.

Design a base plate on each pole. The minimum base plate thickness for all poles is determined by the following criteria:

Case 1 Circular or rectangular solid base plate with the upright pole welded to the top surface of base plate with full penetration butt weld, and where no stiffeners are provided. A base plate with a small center hole, which is less than 1/3 of the upright diameter, and located concentrically with the upright pole, may be considered as a solid base plate.

The magnitude of bending moment in the base plate, induced by the anchoring force of each anchor bolt is $M = (P \times D_1) / 2$, where

M = bending moment at the critical section of the base plate induced by one anchor bolt

P = anchoring force of each anchor bolt

D_1 = horizontal distance between the anchor bolt center and the outer face of the upright, or the difference between the bolt circle radius and the outside radius of the upright

Locate the critical section at the face of the anchor bolt and perpendicular to the bolt circle radius. The overlapped part of two adjacent critical sections is considered ineffective.

Case 2 Circular or rectangular base plate with the upright pole socketed into and attached to the base plate with two lines of fillet weld, and where no stiffeners are provided, or any base plate with a center hole that is larger in diameter than 1/3 of the upright diameter.

The magnitude of bending moment induced by the anchoring force of each anchor bolt is $M = P \times D_2$,

where P = anchoring force of each anchor bolt

D_2 = horizontal distance between the face of the upright and the face of the anchor bolt nut

Locate the critical section at the face of the anchor bolt top nut and perpendicular to the radius of the bolt circle. The overlapped part of two adjacent critical sections is considered ineffective.

If the base plate thickness calculated for Case 2 is less than Case 1, use the thickness calculated for Case 1.

The following additional owner requirements apply concerning pole base plates.

- Ensure that whichever case governs as defined above, the anchor bolt diameter is set to match the base plate thickness. If the minimum diameter required for the anchor bolt exceeds the thickness required for the base plate, set the base plate thickness equal to the required bolt diameter.
- For dual mast arm supports, or for single mast arm supports 50’ or greater, use a minimum 8 bolt orientation with 2” diameter anchor bolts, and a 2” thick base plate.
- For all metal poles with mast arms, use a full penetration groove weld with a backing ring to connect the pole upright component to the base. Refer to Metal Pole Standard Drawing Sheet M4.

Ensure that designs have anchor bolt holes with a diameter 1/4 inch larger than the anchor bolt diameters in the base plate.

Ensure that the anchor bolts have the required diameters, lengths, and positions, and will develop strengths comparable to their respective poles.

Provide designs with a 6 x 12-inch hand hole with a reinforcing frame for each pole.

Provide designs with a terminal compartment with cover and screws in each pole that encompasses the hand hole and contains provisions for a 12-terminal barrier type terminal block.

For each pole, provide designs with provisions for a 1/2 inch minimum thread diameter, coarse thread stud and nut for grounding which will accommodate a #6 AWG ground wire. Ensure the lug is electrically bonded to the pole and is conveniently located inside the pole at the hand hole.

When required, design couplings on the pole for mounting pedestrian pushbuttons at a height of 42 inches above the bottom of the base. Provide mounting points consisting of 1-1/2 inch internally

threaded half-couplings that comply with the NEC that are mounted within the poles. Ensure the couplings are essentially flush with the outside surfaces of the poles and are installed before any required galvanizing. Provide a threaded plug for each half coupling. Ensure that the surface of the plug is essentially flush with the outer end of the mounting point when installed and has a recessed hole to accommodate a standard wrench.

C. Mast Arms:

Design all arm plates and necessary attachment hardware, including bolts and brackets as required by the plans.

Design for grommeted holes on the arms to accommodate the cables for the signals if specified.

Design arms with weatherproof connections for attaching to the shaft of the pole.

Always use a full penetration groove weld with a backing ring to connect the mast arm to the pole. Refer to Metal Pole Standard Drawing Sheet M5.

Capacity of tapped flange plate must be sufficient to develop the full capacity of the connecting bolts. In all cases the flange plate of both arm and shaft must be at least as thick as the arm connecting bolts are in diameter.

4.7. METAL SIGNAL POLE REMOVALS

A. Description:

Remove and dispose of existing metal signal poles including mast arms, and remove and dispose of existing foundations, associated anchor bolts, electrical wires and connections.

B. Construction Methods:

1. Foundations:

Remove and promptly dispose of the metal signal pole foundations including reinforcing steel, electrical wires, and anchor bolts to a minimum depth of two feet below the finished ground elevation. At the Contractor’s option, remove the complete foundation.

2. Metal Poles:

Assume ownership of the metal signal poles, remove the metal signal poles, and promptly transport the metal signal poles from the project. Use methods to remove the metal signal poles and attached traffic signal equipment that will not result in damage to other portions of the project or facility. Repair damages that are a result of the Contractor's actions at no additional cost to the Department.

Transport and properly dispose of the materials.

Backfill and compact disturbed areas to match the finished ground elevation. Seed unpaved areas.

Use methods to remove the foundations that will not result in damage to other portions of the project or facility. Repair damages that are a result of the Contractor's actions at no cost to the Department.

4.8. POLE NUMBERING SYSTEM

Attach an identification tag to each pole shaft and mast arm section as shown on Metal Pole Standard Drawing Sheet M2 “Typical Fabrication Details Common To All Metal Poles”.

4.9. MEASUREMENT AND PAYMENT

Actual number of metal poles with single mast arms furnished, installed, and accepted.

Actual number of soil tests with SPT borings drilled furnished and accepted.

Actual volume of concrete poured in cubic yards of drilled pier foundation furnished, installed and accepted.

Actual number of designs for mast arms with metal poles furnished and accepted.

Actual number of metal signal pole foundations removed and disposed.

Actual number of metal signal poles removed and disposed.

No measurement will be made for foundation designs prepared with metal pole designs, as these will be considered incidental to designing signal support structures.

Payment will be made under:

Metal Pole with Single Mast Arm .....Each
Soil Test .....Each
Drilled Pier Foundation..... Cubic Yard
Mast Arm with Metal Pole Design .....Each
Metal Pole Foundation Removal .....Each
Metal Pole Removal.....Each

5. PROTECTIVE COATING FOR METAL POLES

5.1. DESCRIPTION

Protective coating for metal poles is a supplemental durable color coating that is applied to galvanized steel and aluminum traffic signal structures installed in locations where maintaining an aesthetic appearance is important. Powder Coating is the preferred supplemental protective coating process for coating galvanized steel and aluminum structures. However, for the purposes of this special provision, an Acrylic Primer and top coat paint system is included as an acceptable alternative when protective color coating is required.

Provide protective black coating over galvanization for all steel poles including all necessary hardware in accordance with the plans and specifications. Any aluminum components do not need to be galvanized before application of protective coating.

5.2. MATERIALS

With the exception of aluminum components, furnish all metal poles with galvanic protection along with a tough and durable application of protective coating. Aluminum components shall have a durable powder coating application. Galvanization is not required for aluminum components.

Furnish pole caps that have a low gloss powder finish applied over a hot-dipped galvanized surface. Comply with the applicable provisions of Section 442-10 and 442-12 of the *Standard Specifications*.

The color selected for black protective coating must be verified and approved by the Engineer and City of Lexington prior to fabrication. Shop drawings for metal poles requiring powder coating will not be reviewed until the approving parties listed above have approved the color.

5.3. COATING SHOP APPROVAL

Approve the coating shop facility prior to the application of any coating process. Submit all requests, procedures and documents electronically to:

- Mr. Brian Hunter, P.E., Chemical Testing Engineer
- bhunter@ncdot.gov

A) Submit a quality control procedure that the company has established to ensure a quality and durable coating. The quality control procedure shall contain at a minimum the following:

- Qualified / Certified personnel to manage the QC Program and to conduct Quality Control tests
- Qualified / certified coaters
- Source and type of powder
- How the powder will be stored
- Powder application facility (heated or unheated)
- Surface pre-treatment
- Surface preparation including profile
- Application methods
- Curing conditions (conventional or infrared)
- Curing Temperature
- Adhesion & Holiday Detection
- Repair Procedure
- Storage and protection of coated items
- Shipping and handling (packing, protection, and wrapping)

B) Submit a powder certification from the manufacturer

C) Submit the following to the Chemical Testing Engineer a minimum of four weeks prior to coating application.

1. Two test panels of ASTM A36 steel, ¼ or greater in thickness measuring 8 inches by 11 inches using the proposed color of the final coat; a powder coated over galvanized test panel and a powder coated over un-galvanized test panel.
2. In addition, provide two (2) samples of the same or comparable material and thickness as production pieces. Ensure production piece replicas do not exceed twelve inches (12”) in length and width nor 50 pounds in weight.
3. Submit all test panels with inspection reports and records according to *Standard Specifications*, Section 442, Section 1072, Section 1076, and Section 1080.
4. Acceptance of the panels is determined by meeting the requirements of ASTM D-4541 of 800 psi for both galvanized and un-galvanized and production piece test panels.
5. Send all panels to :

   Materials and Tests Unit
   1801 Blue Ridge Road

Raleigh, NC 27607
Attn: Chemical Testing Engineer

5.4. POWDER COATING

A. Galvanizing

Galvanize steel products in accordance with Section 1076 of the *Standard Specifications*. Ensure the fabricator or designated representative(s) that is supplying the components to be galvanized communicates with the galvanizer to indicate that the galvanized pieces will be powder coated to avoid water or chromate quenching.

B. Surface Preparation

Comply with manufacturer's recommended surface coating specifications, Steel Structure Painting Council (SSPC) specifications and applicable articles of Section 442 (Painting Steel Structures) of the *Standard Specifications*. Ensure that surface preparations and treatments are performed and meet the requirements of the above referenced specifications.

Some pole components, specifically steel plates ¾ inches or more in thickness, may need blast cleaning prior to structure assembly to remove impurities and non-metallic foreign materials. Mechanically remove all weld flux after structure is assembled

Degrease and prepare steel structure for zinc coating after assembly using full immersion baths and pickling processes in heat controlled caustic and acid solutions. Rinse and clean structure to remove caustic or acid solutions by immersion in a circulating fresh water bath. Immerse structure in a heat controlled concentrated zinc ammonium chloride flux solution and air dry as a final prep before hot-dip galvanization.

Ensure that the surface preparation is no less than specified by the powder manufacturer's recommendations. Prepare all components to be coated in accordance with SSPC SP-2 (Hand Tool Cleaning) and/or SSPC SP-3 (Power Tool Cleaning). Remove all drainage spikes, high spots, protrusions or other surface defects using hand or power tools. Do not remove the galvanization below the limits set forth in AASHTO M111.

Remove grease, oils, moisture, scale, rust or any other foreign matter prior to powder coating to ensure ideal adhesion and coating performance. Prepare and coat the galvanized surface as soon as possible after the galvanization process.

C. Powder Coating Application and Curing

Prepare galvanized finish for powder coating by brush blasting in accordance with SSPC-SP7. Ensure all threaded components of the structure are protected from damage during blasting process.

Use thermosetting powder resin that meets 5A or 5B classifications of ASTM D3359. Apply powder coating electrostatically. Follow manufacturer's recommended preheating requirements. Ensure the top coat finish is applied uniformly to all surfaces with a dry film thickness of between 3.0 to 5.0 mils. Cure the top coat by heating the structure to manufacturer recommended temperatures at the duration required to ensure complete and uniform bond.

D. Quality Control

Ensure the applicator provides all test reports and documentation and inspects all coated material as outlined in the *Standard Specifications*, Section 442, Section 1072, Section 1076, and Section 1080. Ensure the quality control inspection is kept separate from the production functions.

E. Storage, Shipping, and Handling

Store all powder coated material inside or as directed by the Engineer.

Protect the product from incurring damage during all shipping, handling, and storing activities. Do not store the product directly on the ground or in areas where water may pool; the Engineer determines the effectiveness of all storage, shipping and handling methods.

F. Repair of Powder Coated Material

Repair all damage to the coating by the original method of application as outlined in the coating facility's repair procedure. Ensure all repair areas meet the original requirements for adhesion as stated in this Project Special Provision.

Photograph, document, and report all damages upon delivery to the project site prior to unloading. Provide documented damage notifications to the Engineer or to their authorized representative so the application firm can be notified. The Engineer has the authority to accept or reject the material as outlined in the *Standard Specifications*.

Submit to the Engineer a repair procedure for damaged coatings which occur during storage, transporting, handling and or installation. Utilize a liquid paint approved by the Department, compatible with the powder applied product. Ensure all repair areas demonstrate an adhesion rating of 400 psi in accordance with ASTM D-4541. Obtain Engineer's acceptance of the final finish.

5.5. ACRYLIC PRIMER AND TOP COAT PAINT SYSTEM 4 (MODIFIED)

A. Description

Follow NCDOT procedures for Powder Coating over Galvanizing. Provide an Acrylic Primer and top coat when a substitute for powder coating is necessary.

Provide supplemental coating for all mast arms with metal signal poles and all necessary hardware for the signalized intersection in accordance with NCDOT Standard specifications – sections 442 and 1080, as contained herein, and as shown on the plans.

Ensure all painting work for new structures, except field touch-up and bolt painting is performed in the shop.

B. Surface Preparation

Ensure all surface preparation is not less than that specified by the paint manufacturer's recommendations.

Ensure all components to be coated are prepared in accordance with SSPC SP2 (Hand Tool Cleaning and or SSPC SP-3 (Power Tool Cleaning). Remove all drainage spikes, high spots, protrusions or other surface defects using hand or power tools. Do not remove the galvanization below the limits set forth in AASHTO M111.

Perform abrasive sweep blasting in accordance with ASTM D6386. Refer to this section for a description of the abrasive blast material to be used. Use a material and technique capable of stripping action to remove corrosion products and to provide a rough surface profile while leaving base zinc layers intact.

Blow down all blasted surfaces with clean compressed air to provide a clean, dry surface.

Ensure all surfaces are free of visible zinc oxides or zinc hydroxides.

C. Materials

Use an approved/qualified waterborne paint meeting the requirements of NCDOT Standard specification section 1080. Do not apply paint until each batch has been tested by the Department. Provide color as specified in the contract documents.

Ensure all paint used on this contract is produced by the same manufacturer.

D. Painting

Apply paint in accordance with the requirements of Section 1080 and Section 442 of the 2010 *Standard Specifications* using System 4 as modified herein.

System 4 (Modified)
Acrylic Primer and Top Coats

Coat	Material	Mils Dry/Wet Film Thickness	Mils Dry/Wet Film Thickness
		Minimum	Maximum
Primer	1080-12 White	3.0 DFT	5.0 DFT
Stripe	1080-12 Brown	4.0 WFT	7.0 WFT
Topcoat	1080-12 Brown	2.0 DFT	4.0 DFT
Total		5.0 DFT	9.0 DFT

Shop paint all galvanized surfaces within 8 hours after surface preparation with the exception of field touch-up and bolt painting.

Mask off and do not paint all data plates and faying surfaces prior to application.

Spray apply all coatings except for the stripe coat. Brush apply the stripe coat to all plate edges, welds, bolt holes and bolts prior to applying the finish coat.

E. Curing

Store all material in a heated shop for a period no less than 24 hours once top coat has been applied. Continue storing material until requirements of ASTM D-1640 have been met.

F. Inspection

Provide inspection records showing the initial average thickness of the hot dipped galvanizing as well as the final average DFT measurement.

Ensure all material is of a uniform appearance free of runs, drips, and sags.

G. Handling

Do not handle, ship, or erect coated members until paint is thoroughly dry.

Protect all shipping and handling either from the coating facility to project site and or storage site to area(s) to construction location from incurring damage to product. Wood blocks and nylon slings are recommended for securing, loading, hoisting or storing members.

H. Repair of Damaged Coating

Repair damage occurring to the galvanized portion of the coating during shipment or installation in accordance with Articles 1076-6 and 1080-9 of the *Standard Specifications*. Repair damage

occurring to the painted portion of the coating during shipment or installation by applying 4.0-7.0 wet mils of topcoat with a brush or roller and feather or taper this to be level with the surrounding areas.

5.6. MEASUREMENT AND PAYMENT

Actual number of single mast arm poles with powder coat applied furnished, installed, and accepted.

Actual number of signal pedestals with powder coat applied furnished, installed, and accepted.

Actual number of pushbutton posts with powder coat applied furnished, installed, and accepted.

Payment will be made under:

Powder Coat for Single Mast Arm Pole (_____).....Each
Powder Coat for Signal Pedestal (_____).....Each
Powder Coat for Pushbutton Post (_____).....Each

6. CONTROLLERS WITH CABINETS

6.1. MATERIALS – TYPE 2070L CONTROLLERS

Conform to CALTRANS *Transportation Electrical Equipment Specifications* (TEES) (dated August 16, 2002, plus Errata 1 dated October 27, 2003 and Errata 2 dated June 08, 2004) except as required herein.

Furnish Model 2070L controllers. Ensure that removal of the CPU module from the controller will place the intersection into flash.

The Department will provide software at the beginning of the burning-in period. Contractor shall give 5 working days notice before needing software. Program software provided by the Department.

Provide model 2070L controllers with the latest version of OS9 operating software and device drivers, composed of the unit chassis and at a minimum the following modules and assemblies:

- MODEL 2070 1B, CPU Module, Single Board
- MODEL 2070-2A, Field I/O Module (FI/O)
  - Note: Configure the Field I/O Module to disable both the External WDT Shunt/Toggle Switch and SP3 (SP3 active indicator is “off”)
- MODEL 2070-3B, Front Panel Module (FP), Display B (8x40)
- MODEL 2070-4A, Power Supply Module, 10 AMP
- MODEL 2070-7A, Async Serial Com Module (9-pin RS-232)

Furnish one additional MODEL 2070-7A, Async Serial Com Module (9-pin RS-232) for all master controller locations.

For each master location and central control center, furnish a U.S. Robotics V.92 or approved equivalent auto-dial/auto-answer external modem to accomplish the interface to the Department-furnished microcomputers. Include all necessary hardware to ensure telecommunications.

6.2. MATERIALS – GENERAL CABINETS

Provide a moisture resistant coating on all circuit boards.

Provide one 20 mm diameter radial lead UL-recognized metal oxide varistor (MOV) between each load switch field terminal and equipment ground. Electrical performance is outlined below.

PROPERTIES OF MOV SURGE PROTECTOR	
Maximum Continuous Applied Voltage at 185° F	150 VAC (RMS) 200 VDC
Maximum Peak 8x20µs Current at 185° F	6500 A
Maximum Energy Rating at 185° F	80 J
Voltage Range 1 mA DC Test at 77° F	212-268 V
Max. Clamping Voltage 8x20µs, 100A at 77° F	395 V
Typical Capacitance (1 MHz) at 77° F	1600 pF

Provide a power line surge protector that is a two-stage device that will allow connection of the radio frequency interference filter between the stages of the device. Ensure that a maximum continuous current is at least 10A at 120V. Ensure that the device can withstand a minimum of 20 peak surge current occurrences at 20,000A for an 8x20 microsecond waveform. Provide a maximum clamp voltage of 395V at 20,000A with a nominal series inductance of 200µh. Ensure that the voltage does not exceed 395V. Provide devices that comply with the following:

Frequency (Hz)	Minimum Insertion Loss (dB)
60	0
10,000	30
50,000	55
100,000	50
500,000	50
2,000,000	60
5,000,000	40
10,000,000	20
20,000,000	25

6.3. MATERIALS – TYPE 170E CABINETS

A. Type 170 E Cabinets General:

Conform to the city of Los Angeles' Specification No. 54-053-08, *Traffic Signal Cabinet Assembly Specification* (dated July 2008), except as required herein.

Furnish model 332 base mounted cabinets configured for 8 vehicle phases, 4 pedestrian phases, and 6 overlaps. When overlaps are required, provide auxiliary output files for the overlaps. Do not reassign load switches to accommodate overlaps unless shown on electrical details.

Provide model 200 load switches, model 222 loop detector sensors, model 252 AC isolators, and model 242 DC isolators according to the electrical details. As a minimum, provide one (1) model 2018 conflict monitor, one (1) model 206L power supply unit, two (2) model 204 flashers, one (1) DC isolator (located in slot I14), and four (4) model 430 flash transfer relays (provide seven (7) model 430 flash transfer relays if auxiliary output file is installed) with each cabinet.

B. Type 170 E Cabinet Electrical Requirements:

Provide a cabinet assembly designed to ensure that upon leaving any cabinet switch or conflict monitor initiated flashing operation, the controller starts up in the programmed start up phases and start up interval.

Furnish two sets of non-fading cabinet wiring diagrams and schematics in a paper envelope or container and placed in the cabinet drawer.

All AC+ power is subject to radio frequency signal suppression.

Provide surge suppression in the cabinet for each type of cabinet device. Provide surge protection for the full capacity of the cabinet input file. Provide surge suppression devices that operate properly over a temperature range of -40º F to +185º F. Ensure the surge suppression devices provide both common and differential modes of protection.

Provide a pluggable power line surge protector that is installed on the back of the PDA (power distribution assembly) chassis to filter and absorb power line noise and switching transients. Ensure the device incorporates LEDs for failure indication and provides a dry relay contact closure for the purpose of remote sensing. Ensure the device meets the following specifications:

- Peak Surge Current (Single pulse, 8x20µs)……..20,000A
- Occurrences (8x20µs waveform)……..10 minimum @ 20,000A
- Maximum Clamp Voltage…….395VAC
- Operating Current……..15 amps
- Response Time……..< 5 nanoseconds

Provide a loop surge suppressor for each set of loop terminals in the cabinet. Ensure the device meets the following specifications:

- Peak Surge Current (6 times, 8x20µs)
  - (Differential Mode)…….400A
  - (Common Mode)……1,000A
- Occurrences (8x20µs waveform)……..500 min @ 200A
- Maximum Clamp Voltage
  - (Differential Mode @400A)……35V
  - (Common Mode @1,000A)…….35V

- Response Time……..< 5 nanoseconds
- Maximum Capacitance……..35 pF

Provide a data communications surge suppressor for each communications line entering or leaving the cabinet. Ensure the device meets the following specifications:

- Peak Surge Current (Single pulse, 8x20µs)……..10,000A
- Occurrences (8x20µs waveform)……..100 min @ 2,000A
- Maximum Clamp Voltage…….Rated for equipment protected
- Response Time……..< 1 nanosecond
- Maximum Capacitance…….1,500 pF
- Maximum Series Resistance…….15Ω

Provide a DC signal surge suppressor for each DC input channel in the cabinet. Ensure the device meets the following specifications:

- Peak Surge Current (Single pulse, 8x20µs)……..10,000A
- Occurrences (8x20µs waveform)……..100 @ 2,000A
- Maximum Clamp Voltage…….30V
- Response Time……..< 1 nanosecond

Provide a 120 VAC signal surge suppressor for each AC+ interconnect signal input. Ensure the device meets the following specifications:

- Peak Surge Current (Single pulse, 8x20µs)……..20,000A
- Maximum Clamp Voltage…….350VAC
- Response Time……..< 200 nanoseconds
- Discharge Voltage……<200 Volts @ 1,000A
- Insulation Resistance……≥100 MΩ

Provide conductors for surge protection wiring that are of sufficient size (ampacity) to withstand maximum overcurrents which could occur before protective device thresholds are attained and current flow is interrupted.

If additional surge protected power outlets are needed to accommodate fiber transceivers, modems, etc., install a UL listed, industrial, heavy-duty type power outlet strip with a minimum rating of 15 A / 125 VAC, 60 Hz. Provide a strip that has a minimum of 3 grounded outlets. Ensure the power outlet strip plugs into one of the controller unit receptacles located on the rear of the PDA. Ensure power outlet strip is mounted securely; provide strain relief if necessary.

Provide a door switch in the front and a door switch in the rear of the cabinet that will provide the controller unit with a Door Ajar alarm when either the front or the rear door is open. Ensure the door switches apply DC ground to the Input File when either the front door or the rear door is open.

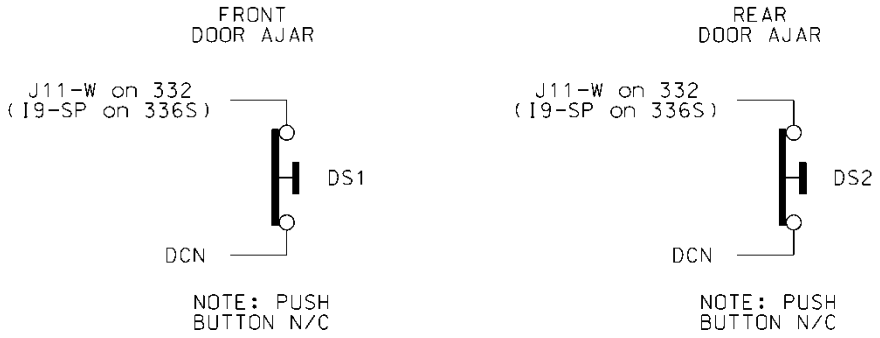

Furnish a fluorescent fixture in the rear across the top of the cabinet and another fluorescent fixture in the front across the top of the cabinet at a minimum. Ensure that the fixtures provide sufficient light to illuminate all terminals, labels, switches, and devices in the cabinet. Conveniently locate the fixtures so as not to interfere with a technician's ability to perform work on any devices or terminals in the cabinet. Provide a protective diffuser to cover exposed bulbs. Install 16 watt T-4 lamps in the fluorescent fixtures. Provide a door switch to provide power to each fixture when the respective door is open. Wire the fluorescent fixtures to the 15 amp ECB (equipment circuit breaker).

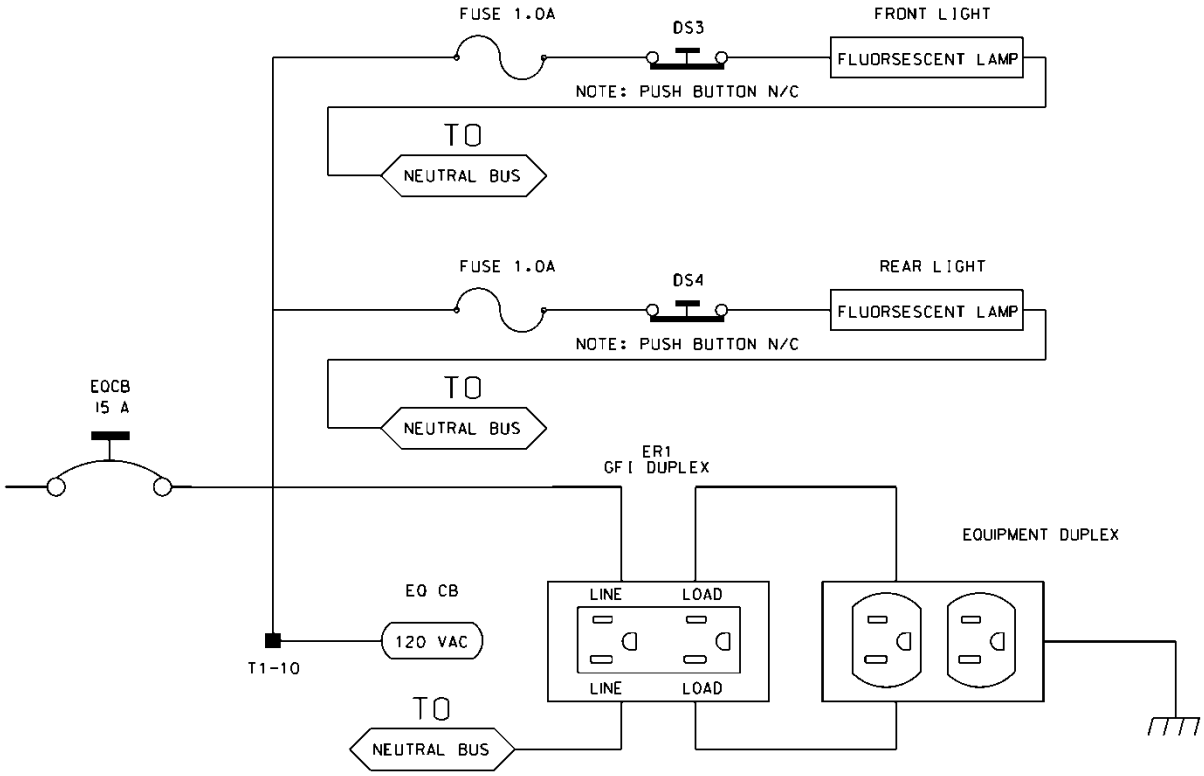

Furnish a police panel with a police panel door. Ensure that the police panel door permits access to the police panel when the main door is closed. Ensure that no rainwater can enter the cabinet even with the police panel door open. Provide a police panel door hinged on the right side as viewed from the front. Provide a police panel door lock that is keyed to a standard police/fire call box key. In addition to the requirements of LA Specification No. 54-053-08, provide the police panel with a

toggle switch connected to switch the intersection operation between normal stop-and-go operation (AUTO) and manual operation (MANUAL). Ensure that manual control can be implemented using inputs and software such that the controller provides full programmed clearance times for the yellow clearance and red clearance for each phase while under manual control.

Provide a 1/4-inch locking phone jack in the police panel for a hand control to manually control the intersection. Provide sufficient room in the police panel for storage of a hand control and cord.

For model 332 base mounted cabinets, ensure terminals J14-E and J14-K are wired together on the rear of the Input File. Connect TB9-12 (J14 Common) on the Input Panel to T1-2 (AC-) on the rear of the PDA.

Provide detector test switches mounted at the top of the cabinet rack or other convenient location which may be used to place a call on each of eight phases based on the chart below. Provide three positions for each switch: On (place call), Off (normal detector operation), and Momentary On (place momentary call and return to normal detector operation after switch is released). Ensure that the switches are located such that the technician can read the controller display and observe the intersection.

Connect detector test switches for cabinets as follows:

332 Cabinet	
Detector Call Switches	**Terminals**
Phase 1	I1-W
Phase 2	I4-W
Phase 3	I5-W
Phase 4	I8-W
Phase 5	J1-W
Phase 6	J4-W
Phase 7	J5-W
Phase 8	J8-W

Provide the PCB 28/56 connector for the conflict monitor unit (CMU) with 28 independent contacts per side, dual-sided with 0.156 inch contact centers. Provide the PCB 28/56 connector contacts with solder eyelet terminations. Ensure all connections to the PCB 28/56 connector are soldered to the solder eyelet terminations.

Ensure that all cabinets have the CMU connector wired according to the 332 cabinet connector pin assignments (include all wires for auxiliary output file connection). Wire pins 13, 16, R, and U of the CMU connector to a separate 4 pin plug, P1, as shown below. Provide a second plug, P2, which will mate with P1 and is wired to the auxiliary output file as shown below. Provide an additional plug, P3, which will mate with P1 and is wired to the pedestrian yellow circuits as shown below. When no auxiliary output file is installed in the cabinet, provide wires for the green and yellow inputs for channels 11, 12, 17, and 18, the red inputs for channels 17 and 18, and the wires

for the P2 plug. Terminate the two-foot wires with ring type lugs, insulated, and bundled for optional use.

	P1		P2		P3	
PIN	FUNCTION	CONN TO	FUNCTION	CONN TO	FUNCTION	CONN TO
1	CH-9G	CMU-13	OLA-GRN	A123	2P-YEL	114
2	CH-9Y	CMU-16	OLA-YEL	A122	4P-YEL	105
3	CH-10G	CMU-R	OLB-GRN	A126	6P-YEL	120
4	CH-10Y	CMU-U	OLB-YEL	A125	8P-YEL	111

Do not provide the P20 terminal assembly (red monitor board) or red interface ribbon cable as specified in LA Specification No. 54-053-08.

Provide a P20 connector that mates with and is compatible with the red interface connector mounted on the front of the conflict monitor. Ensure that the P20 connector and the red interface connector on the conflict monitor are center polarized to ensure proper connection. Ensure that removal of the P20 connector will cause the conflict monitor to recognize a latching fault condition and place the cabinet into flashing operation.

Wire the P20 connector to the output file and auxiliary output file using 22 AWG stranded wires. Ensure the length of these wires is a minimum of 42 inches in length. Provide a durable braided sleeve around the wires to organize and protect the wires.

Wire the P20 connector to the traffic signal red displays to provide inputs to the conflict monitor as shown below. Ensure the pedestrian Don't Walk circuits are wired to channels 13 through 16 of the P20 connector. When no auxiliary output file is installed in the cabinet, provide wires for channels 9 through 12 reds. Provide a wire for special function 1. Terminate the unused wires with ring type lugs, insulated, and bundled for optional use.

	P20 Connector				
IN	FUNCTION	CONN TO	PIN	FUNCTION	CONN TO
1	Channel 15 Red	119	2	Channel 16 Red	110
3	Channel 14 Red	104	4	Chassis GND	01-9
5	Channel 13 Red	113	6	N/C	
7	Channel 12 Red	AUX 101	8	Spec Function 1	
9	Channel 10 Red	AUX 124	10	Channel 11 Red	AUX 114
11	Channel 9 Red	AUX 121	12	Channel 8 Red	107
13	Channel 7 Red	122	14	Channel 6 Red	134
15	Channel 5 Red	131	16	Channel 4 Red	101
17	Channel 3 Red	116	18	Channel 2 Red	128
19	Channel 1 Red	125	20	Red Enable	01-14

Ensure the controller unit outputs to the auxiliary output file are pre-wired to the C5 connector. When no auxiliary output file is installed in the cabinet, connect the C5 connector to a storage socket located on the Input Panel or on the rear of the PDA.

Do not wire pin 12 of the load switch sockets.

In addition to the requirements of LA Specification No. 54-053-08, ensure relay K1 on the Power Distribution Assembly (PDA) is a four pole relay and K2 on the PDA is a two pole relay.

Provide a two pole, ganged circuit breaker for the flash bus circuit. Ensure the flash bus circuit breaker is an inverse time circuit breaker rated for 10 amps at 120 VAC with a minimum of 10,000 RMS symmetrical amperes short circuit current rating. Do not provide the auxiliary switch feature on the flash bus circuit breaker. Ensure the ganged flash bus circuit breaker is certified by the circuit breaker manufacturer to provide gang tripping operation.

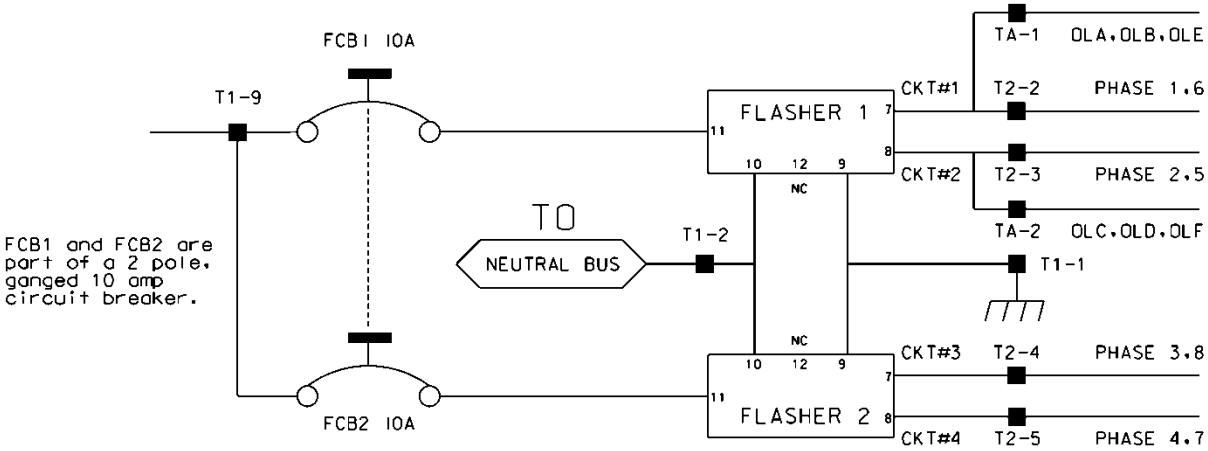

Ensure auxiliary output files are wired as follows:

AUXILIARY OUTPUT FILE TERMINAL BLOCK TA ASSIGNMENTS	
POSITION	**FUNCTION**
1	Flasher Unit #1, Circuit 1/FTR1 (OLA, OLB)/FTR3 (OLE)
2	Flasher Unit #1, Circuit 2/FTR2 (OLC, OLD)/FTR3 (OLF)
3	Flash Transfer Relay Coils
4	AC -
5	Power Circuit 5
6	Power Circuit 5
7	Equipment Ground Bus
8	NC

Provide four spare load resistors mounted in each cabinet. Ensure each load resistor is rated as shown in the table below. Wire one side of each load resistor to AC-. Connect the other side of each resistor to a separate terminal on a four (4) position terminal block. Mount the load resistors and terminal block either inside the back of Output File No. 1 or on the upper area of the Service Panel.

ACCEPTABLE LOAD RESISTOR VALUES	
VALUE (ohms)	**WATTAGE**
1.5K – 1.9 K	25W (min)
2.0K – 3.0K	10W (min)

Provide Model 200 load switches, Model 204 flashers, Model 242 DC isolators, Model 252 AC isolators, and Model 206L power supply units that conform to CALTRANS' "*Transportation Electrical Equipment Specifications*" dated March 12, 2009 with Erratum 1.

C. Type 170 E Cabinet Physical Requirements:

Do not mold, cast, or scribe the name "City of Los Angeles" on the outside of the cabinet door as specified in LA Specification No. 54-053-08. Do not provide a Communications Terminal Panel as specified in LA Specification No. 54-053-08. Do not provide terminal block TBB on the Service Panel. Do not provide Cabinet Verification Test Program software or associated test jigs as specified in LA Specification No. 54-053-08.

Furnish unpainted, natural, aluminum cabinet shells. Ensure that all non-aluminum hardware on the cabinet is stainless steel or a Department approved non-corrosive alternate.

Ensure the lifting eyes, gasket channels, police panel, and all supports welded to the enclosure and doors are fabricated from 0.125 inch minimum thickness aluminum sheet and meet the same standards as the cabinet and doors.

Provide front and rear doors with latching handles that allow padlocking in the closed position. Furnish 0.75 inch minimum diameter stainless steel handles with a minimum 0.5 inch shank. Place the padlocking attachment at 4.0 inches from the handle shank center to clear the lock and key. Provide an additional 4.0 inches minimum gripping length.

Provide Corbin #2 locks on the front and rear doors. Provide one (1) Corbin #2 and one (1) police master key with each cabinet. Ensure main door locks allow removal of keys in the locked position only.

Provide a surge protection panel with 16 loop surge protection devices and designed to allow sufficient free space for wire connection/disconnection and surge protection device replacement. For model 332 cabinets, provide an additional 20 loop surge protection devices. Provide an additional two AC+ interconnect surge devices to protect one slot and eight DC surge protection devices to protect four slots. Provide no protection devices on slot I14.

For base mounted cabinets, mount surge protection panels on the left side of the cabinet as viewed from the rear. Attach each panel to the cabinet rack assembly using bolts and make it easily removable. Mount the surge protection devices in vertical rows on each panel and connect the devices to one side of 12 position, double row terminal blocks with #8 screws. For each surge protection panel, terminate all grounds from the surge protection devices on a copper equipment ground bus attached to the surge protection panel. Wire the terminals to the rear of a standard input file using spade lugs for input file protection.

Provide permanent labels that indicate the slot and the pins connected to each terminal that may be viewed from the rear cabinet door. Label and orient terminals so that each pair of inputs is next to each other. Indicate on the labeling the input file (I or J), the slot number (1-14) and the terminal pins of the input slots (either D & E for upper or J & K for lower).

Provide a minimum 14 x 16 inch pull out, hinged top shelf located immediately below controller mounting section of the cabinet. Ensure the shelf is designed to fully expose the table surface outside the controller at a height approximately even with the bottom of the controller. Ensure the shelf has a storage bin interior which is a minimum of 1 inch deep and approximately the same dimensions as the shelf. Provide an access to the storage area by lifting the hinged top of the shelf. Fabricate the shelf and slide from aluminum or stainless steel and ensure the assembly can support the 2070L controller plus 15 pounds of additional weight. Ensure shelf has a locking mechanism to secure it in the fully extended position and does not inhibit the removal of the 2070L controller or removal of cards inside the controller when fully extended. Provide a locking mechanism that is easily released when the shelf is to be returned to its non-use position directly under the controller.

D. Model 2018 Enhanced Conflict Monitor:

Furnish Model 2018 Enhanced Conflict Monitors that provide monitoring of 18 channels. Ensure each channel consists of a green, yellow, and red field signal input. Ensure that the conflict monitor meets or exceeds CALTRANS' Transportation Electrical Equipment Specifications dated March 12, 2009, with Erratum 1 (hereafter referred to as CALTRANS' 2009 TEES) for a model 210 monitor unit and other requirements stated in this specification.

Ensure the conflict monitor is provided with an 18 channel conflict programming card. Pin EE and Pin T of the conflict programming card shall be connected together. Pin 16 of the conflict programming card shall be floating. Ensure that the absence of the conflict programming card will cause the conflict monitor to trigger (enter into fault mode), and remain in the triggered state until the programming card is properly inserted and the conflict monitor is reset.

Provide a conflict monitor that incorporates LED indicators into the front panel to dynamically display the status of the monitor under normal conditions and to provide a comprehensive review of field inputs with monitor status under fault conditions. Ensure that the monitor indicates the channels that were active during a conflict condition and the channels that experienced a failure for all other per channel fault conditions detected. Ensure that these indications and the status of each channel are retained until the Conflict Monitor is reset. Furnish LED indicators for the following:

- AC Power (Green LED indicator)
- VDC Failed (Red LED indicator)
- WDT Error (Red LED indicator)
- Conflict (Red LED indicator)
- Red Fail (Red LED indicator)
- Dual Indication (Red LED indicator)
- Yellow/Clearance Failure (Red LED indicator)
- PCA/PC Ajar (Red LED indicator)
- Monitor Fail/Diagnostic Failure (Red LED indicator)

- 54 Channel Status Indicators (1 Red, 1 Yellow, and 1 Green LED indicator for each of the 18 channels)

Provide a switch to set the Red Fail fault timing. Ensure that when the switch is in the ON position the Red Fail fault timing value is set to 1350 +/- 150ms (2018 mode). Ensure that when the switch is in the OFF position the Red Fail fault timing value is set to 850 +/- 150ms (210 mode).

Provide a switch to set the Watchdog fault timing. Ensure that when the switch is in the ON position the Watchdog fault timing value is set to 1.0 +/- 0.1s (2018 mode). Ensure that when the switch is in the OFF position the Watchdog fault timing value is set to 1.5 +/- 0.1s (210 mode).

Provide a jumper or switch to set the AC line brown-out levels. Ensure that when the jumper is present or the switch is in the ON position the AC line dropout voltage threshold is 98 +/- 2 Vrms, the AC line restore voltage threshold is 103 +/- 2 Vrms, and the AC line brown-out timing value is set to 400 +/- 50ms (2018 mode). Ensure that when the jumper is not present or the switch is in the OFF position the AC line dropout voltage threshold is 92 +/- 2 Vrms, the AC line restore voltage threshold is 98 +/- 2 Vrms, and the AC line brown-out timing value is set to 80 +/- 17ms (210 mode).

Provide a jumper or switch that will enable and disable the Watchdog Latch function. Ensure that when the jumper is not present or the switch is in the OFF position the Watchdog Latch function is disabled. In this mode of operation, a Watchdog fault will be reset following a power loss, brownout, or power interruption. Ensure that when the jumper is present or the switch is in the ON position the Watchdog Latch function is enabled. In this mode of operation, a Watchdog fault will be retained until a Reset command is issued.

Provide a jumper that will reverse the active polarity for pin #EE (output relay common). Ensure that when the jumper is not present pin #EE (output relay common) will be considered ‘Active’ at a voltage greater than 70 Vrms and ‘Not Active’ at a voltage less than 50 Vrms (Caltrans mode). Ensure that when the jumper is present pin #EE (output relay common) will be considered ‘Active’ at a voltage less than 50 Vrms and ‘Not Active’ at a voltage greater than 70 Vrms (Failsafe mode).

In addition to the connectors required by CALTRANS’ 2009 TEES, provide the conflict monitor with a red interface connector mounted on the front of the monitor. Ensure the connector is a 20 pin, right angle, center polarized, male connector with latching clip locks and polarizing keys. Ensure the right angle solder tails are designed for a 0.062” thick printed circuit board. Keying of the connector shall be between pins 3 and 5, and between 17 and 19. Ensure the connector has two rows of pins with the odd numbered pins on one row and the even pins on the other row. Ensure the connector pin row spacing is 0.10” and pitch is 0.10”. Ensure the mating length of the connector pins is 0.24”. Ensure the pins are finished with gold plating 30μ” thick.

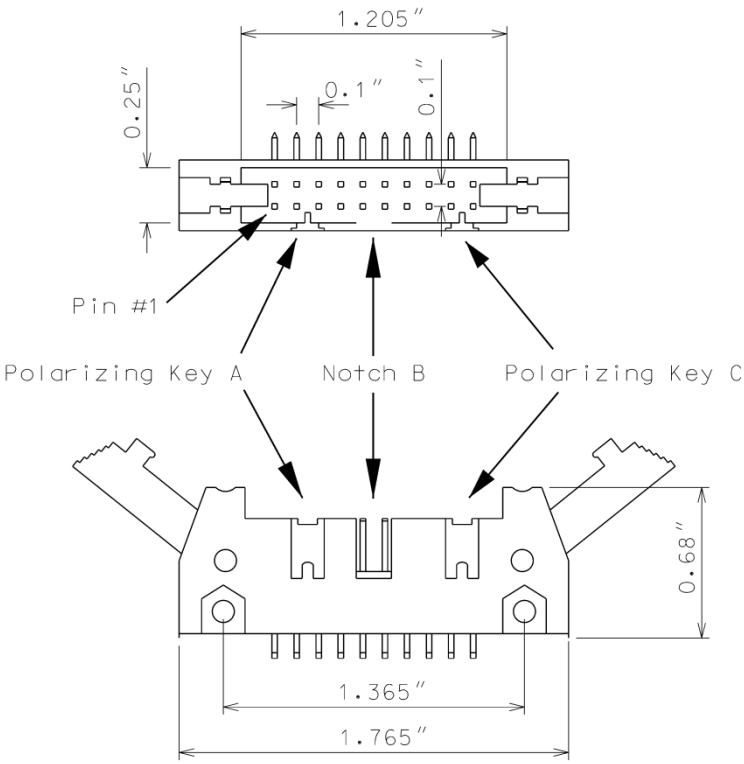

Ensure the red interface connector pins on the monitor have the following functions:

Pin #	Function	Pin #	Function
1	Channel 15 Red	2	Channel 16 Red
3	Channel 14 Red	4	Chassis Ground
5	Channel 13 Red	6	Special Function 2
7	Channel 12 Red	8	Special Function 1
9	Channel 10 Red	10	Channel 11 Red
11	Channel 9 Red	12	Channel 8 Red
13	Channel 7 Red	14	Channel 6 Red
15	Channel 5 Red	16	Channel 4 Red
17	Channel 3 Red	18	Channel 2 Red
19	Channel 1 Red	20	Red Enable

Ensure that removal of the P20 cable connector will cause the conflict monitor to recognize a latching fault condition and place the cabinet into flashing operation.

Provide Special Function 1 and Special Function 2 inputs to the unit which shall disable only Red Fail Monitoring when either input is sensed active. A Special Function input shall be sensed active when the input voltage exceeds 70 Vrms with a minimum duration of 550 ms. A Special Function input shall be sensed not active when the input voltage is less than 50 Vrms or the duration is less

than 250 ms. A Special Function input is undefined by these specifications and may or may not be sensed active when the input voltage is between 50 Vrms and 70 Vrms or the duration is between 250 ms and 550 ms.

Ensure the conflict monitor recognizes field signal inputs for each channel that meet the following requirements:

- consider a Red input greater than 70 Vrms and with a duration of at least 500 ms as an "on" condition;
- consider a Red input less than 50 Vrms or with a duration of less than 200 ms as an "off" condition (no valid signal);
- consider a Red input between 50 Vrms and 70 Vrms or with a duration between 200 ms and 500 ms to be undefined by these specifications;
- consider a Green or Yellow input greater than 25 Vrms and with a duration of at least 500 ms as an "on" condition;
- consider a Green or Yellow input less than 15 Vrms or with a duration of less than 200 ms as an "off" condition; and
- consider a Green or Yellow input between 15 Vrms and 25 Vrms or with a duration between 200 ms and 500 ms to be undefined by these specifications.

Provide a conflict monitor that recognizes the faults specified by CALTRANS' 2009 TEES and the following additional faults. Ensure the conflict monitor will trigger upon detection of a fault and will remain in the triggered (in fault mode) state until the unit is reset at the front panel or through the external remote reset input for the following failures:

1. **Red Monitoring or Absence of Any Indication (Red Failure):** A condition in which no "on" voltage signal is detected on any of the green, yellow, or red inputs to a given monitor channel. If a signal is not detected on at least one input (R, Y, or G) of a conflict monitor channel for a period greater than 1000 ms when used with a 170 controller and 1500 ms when used with a 2070L controller, ensure monitor will trigger and put the intersection into flash. If the absence of any indication condition lasts less that 750 ms when used with a 170 controller and 1200 ms when used with a 2070L controller, ensure conflict monitor will not trigger. Red fail monitoring shall be enabled on a per channel basis by the use of switches located on the conflict monitor. Have red monitoring occur when all of the following input conditions are in effect:

   a) Red Enable input to monitor is active (Red Enable voltages are "on" at greater than 70 Vrms, off at less than 50 Vrms, undefined between 50 and 70 Vrms), and

   b) Neither Special Function 1 nor Special Function 2 inputs are active.

   c) Pin #EE (output relay common) is not active

2. **Short/Missing Yellow Indication Fault (Clearance Error):** Yellow indication following a green is missing or shorter than 2.7 seconds (with ± 0.1-second accuracy). If a channel fails to detect an "on" signal at the Yellow input for a minimum of 2.7 seconds (± 0.1 second) following the detection of an "on" signal at a Green input for that channel, ensure that the monitor triggers and generates a clearance/short yellow error fault indication. Short/missing yellow (clearance) monitoring shall be enabled on a per channel basis by the use of switches

located on the conflict monitor. This fault shall not occur when the channel is programmed for Yellow Inhibit, when the Red Enable signal is inactive or pin #EE (output relay common) is active.

3. **Dual Indications on the Same Channel:** In this condition, more than one indication (R,Y,G) is detected as "on" at the same time on the same channel. If dual indications are detected for a period greater than 500 ms, ensure that the conflict monitor triggers and displays the proper failure indication (Dual Ind fault). If this condition is detected for less than 200 ms, ensure that the monitor does not trigger. G-Y-R dual indication monitoring shall be enabled on a per channel basis by the use of switches located on the conflict monitor. G-Y dual indication monitoring shall be enabled for all channels by use of a switch located on the conflict monitor. This fault shall not occur when the Red Enable signal is inactive or pin #EE (output relay common) is active.
4. **Configuration Settings Change:** The configuration settings are comprised of (as a minimum) the permissive diode matrix, dual indication switches, yellow disable jumpers, any option switches, any option jumpers, and the Watchdog Enable switch. Ensure the conflict monitor compares the current configuration settings with the previous stored configuration settings on power-up, on reset, and periodically during operation. If any of the configuration settings are changed, ensure that the conflict monitor triggers and causes the program card indicator to flash. Ensure that configuration change faults are only reset by depressing and holding the front panel reset button for a minimum of three seconds. Ensure the external remote reset input does not reset configuration change faults.

Ensure the conflict monitor will trigger and the AC Power indicator will flash at a rate of 2 Hz ± 20% with a 50% duty cycle when the AC Line voltage falls below the "drop-out" level. Ensure the conflict monitor will resume normal operation when the AC Line voltage returns above the "restore" level. Ensure the AC Power indicator will remain illuminated when the AC voltage returns above the "restore" level. Should an AC Line power interruption occur while the monitor is in the fault mode, then upon restoration of AC Line power, the monitor will remain in the fault mode and the correct fault and channel indicators will be displayed.

Provide a flash interval of at least 6 seconds and at most 10 seconds in duration following a power-up, an AC Line interruption, or a brownout restore. Ensure the conflict monitor will suspend all fault monitoring functions, close the Output relay contacts, and flash the AC indicator at a rate of 4 Hz ± 20% with a 50% duty cycle during this interval. Ensure the termination of the flash interval after at least 6 seconds if the Watchdog input has made 5 transitions between the True and False state and the AC Line voltage is greater than the "restore" level. If the watchdog input has not made 5 transitions between the True and False state within 10 ± 0.5 seconds, the monitor shall enter a WDT error fault condition.

Ensure the conflict monitor will monitor an intersection with a minimum of four approaches using the four-section Flashing Yellow Arrow (FYA) vehicle traffic signal as outlined by the NCHRP 3-54 research project for protected-permissive left turn signal displays. Ensure the conflict monitor will operate in the FYA mode and FYAc (Compact) mode as specified below to monitor each channel for the following fault conditions: Conflict, Red Fail, Dual Indication, and Clearance. Provide a switch to select between the FYA mode and FYAc mode. Provide a switch to select each FYA phase movement for monitoring.

FYA mode

FYA Signal Head	Phase 1	Phase 3	Phase 5	Phase 7
Red Arrow	Channel 9 Red	Channel 10 Red	Channel 11 Red	Channel 12 Red
Yellow Arrow	Channel 9 Yellow	Channel 10 Yellow	Channel 11 Yellow	Channel 12 Yellow
Flashing Yellow Arrow	Channel 9 Green	Channel 10 Green	Channel 11 Green	Channel 12 Green
Green Arrow	Channel 1 Green	Channel 3 Green	Channel 5 Green	Channel 7 Green

FYAc mode

FYA Signal Head	Phase 1	Phase 3	Phase 5	Phase 7
Red Arrow	Channel 1 Red	Channel 3 Red	Channel 5 Red	Channel 7 Red
Yellow Arrow	Channel 1 Yellow	Channel 3 Yellow	Channel 5 Yellow	Channel 7 Yellow
Flashing Yellow Arrow	Channel 1 Green	Channel 3 Green	Channel 5 Green	Channel 7 Green
Green Arrow	Channel 9 Green	Channel 9 Yellow	Channel 10 Green	Channel 10 Yellow

Ensure that the conflict monitor will log at least nine of the most recent events detected by the monitor in non-volatile EEPROM memory (or equivalent). For each event, record at a minimum the time, date, type of event, status of each field signal indication with RMS voltage, and specific channels involved with the event. Ensure the conflict monitor will log the following events: monitor reset, configuration, previous fault, and AC line. Furnish the signal sequence log that shows all channel states (Greens, Yellows, and Reds) and the Red Enable State for a minimum of 2 seconds prior to the current fault trigger point. Ensure the display resolution of the inputs for the signal sequence log is not greater than 50 ms.

For conflict monitors used within an Ethernet communications system, provide a conflict monitor with an Ethernet 10/100 Mbps, RJ-45 port for data communication access to the monitor by a local notebook computer and remotely via a workstation or notebook computer device connected to the signal system local area network. The Ethernet port shall be electrically isolated from the conflict monitor's electronics and shall provide a minimum of 1500 Vrms isolation. Integrate monitor with Ethernet network in cabinet. Provide software to retrieve the time and date from a network server in order to synchronize the on-board times between the conflict monitor and the

controller. Furnish and install the following Windows based, graphic user interface software on workstations and notebook computers where the signal system client software is installed: 1) software to view and retrieve all event log information, 2) software that will search and display a list of conflict monitor IP addresses and IDs on the network, and 3) software to change the conflict monitor's network parameters such as IP address and subnet mask.

For non-Ethernet connected monitors, provide a RS-232C/D compliant port (DB-9 female connector) on the front panel of the conflict monitor in order to provide communications from the conflict monitor to the 170/2070L controller or to a Department-furnished laptop computer. Electrically isolate the port interface electronics from all monitor electronics, excluding Chassis Ground. Ensure that the controller can receive all event log information through a controller Asynchronous Communications Interface Adapter (Type 170E) or Async Serial Comm Module (2070). Furnish and connect a serial cable from the conflict monitor's DB-9 connector to Comm Port 1 of the 2070 controller. Ensure conflict monitor communicates with the controller. Provide a Windows based graphic user interface software to communicate directly through the same monitor RS-232C/D compliant port to retrieve and view all event log information to a Department-furnished laptop computer. The RS-232C/D compliant port on the monitor shall allow the monitor to function as a DCE device with pin connections as follows:

Conflict Monitor RS-232C/D (DB-9 Female) Pinout		
Pin Number	**Function**	**I/O**
1	DCD	O
2	TX Data	O
3	RX Data	I
4	DTR	I
5	Ground	-
6	DSR	O
7	CTS	I
8	RTS	O
9	NC	-

MONITOR BOARD EDGE CONNECTOR

Pin #	Function (Back Side)	Pin #	Function (Component Side)
1	Channel 2 Green	A	Channel 2 Yellow
2	Channel 13 Green	B	Channel 6 Green
3	Channel 6 Yellow	C	Channel 15 Green
4	Channel 4 Green	D	Channel 4 Yellow
5	Channel 14 Green	E	Channel 8 Green
6	Channel 8 Yellow	F	Channel 16 Green
7	Channel 5 Green	H	Channel 5 Yellow
8	Channel 13 Yellow	J	Channel 1 Green
9	Channel 1 Yellow	K	Channel 15 Yellow
10	Channel 7 Green	L	Channel 7 Yellow
11	Channel 14 Yellow	M	Channel 3 Green
12	Channel 3 Yellow	N	Channel 16 Yellow
13	Channel 9 Green	P	Channel 17 Yellow
14	Channel 17 Green	R	Channel 10 Green
15	Channel 11 Yellow	S	Channel 11 Green
16	Channel 9 Yellow	T	Channel 18 Yellow
17	Channel 18 Green	U	Channel 10 Yellow
--		--	
18	Channel 12 Yellow	V	Channel 12 Green
19	Channel 17 Red	W	Channel 18 Red
20	Chassis Ground	X	Not Assigned
21	AC-	Y	DC Common
22	Watchdog Timer	Z	External Test Reset
23	+24VDC	AA	+24VDC
24	Tied to Pin 25	BB	Stop Time (Output)
25	Tied to Pin 24	CC	Not Assigned
26	Not Assigned	DD	Not Assigned
27	Relay Output, Side #3, N.O.	EE	Relay Output,Side #2,Common
28	Relay Output, Side #1, N.C.	FF	AC+

-- Slotted for keying between Pins 17/U and 18/V

CONFLICT PROGRAM CARD PIN ASSIGNMENTS

Pin #	Function (Back Side)	Pin #	Function (Component Side)
1	Channel 2 Green	A	Channel 1 Green
2	Channel 3 Green	B	Channel 2 Green
3	Channel 4 Green	C	Channel 3 Green
4	Channel 5 Green	D	Channel 4 Green
5	Channel 6 Green	E	Channel 5 Green
6	Channel 7 Green	F	Channel 6 Green
7	Channel 8 Green	H	Channel 7 Green
8	Channel 9 Green	J	Channel 8 Green
9	Channel 10 Green	K	Channel 9 Green
10	Channel 11 Green	L	Channel 10 Green
11	Channel 12 Green	M	Channel 11 Green
12	Channel 13 Green	N	Channel 12 Green
13	Channel 14 Green	P	Channel 13 Green
14	Channel 15 Green	R	Channel 14 Green
15	Channel 16 Green	S	Channel 15 Green
16	N/C	T	PC AJAR
17	Channel 1 Yellow	U	Channel 9 Yellow
18	Channel 2 Yellow	V	Channel 10 Yellow
19	Channel 3 Yellow	W	Channel 11 Yellow
20	Channel 4 Yellow	X	Channel 12 Yellow
21	Channel 5 Yellow	Y	Channel 13 Yellow
22	Channel 6 Yellow	Z	Channel 14 Yellow
23	Channel 7 Yellow	AA	Channel 15 Yellow
24	Channel 8 Yellow	BB	Channel 16 Yellow
--		--	
25	Channel 17 Green	CC	Channel 17 Yellow
26	Channel 18 Green	DD	Channel 18 Yellow
27	Channel 16 Green	EE	PC AJAR (Program Card)
28	Yellow Inhibit Common	FF	Channel 17 Green

-- Slotted for keying between Pins 24/BB and 25/CC

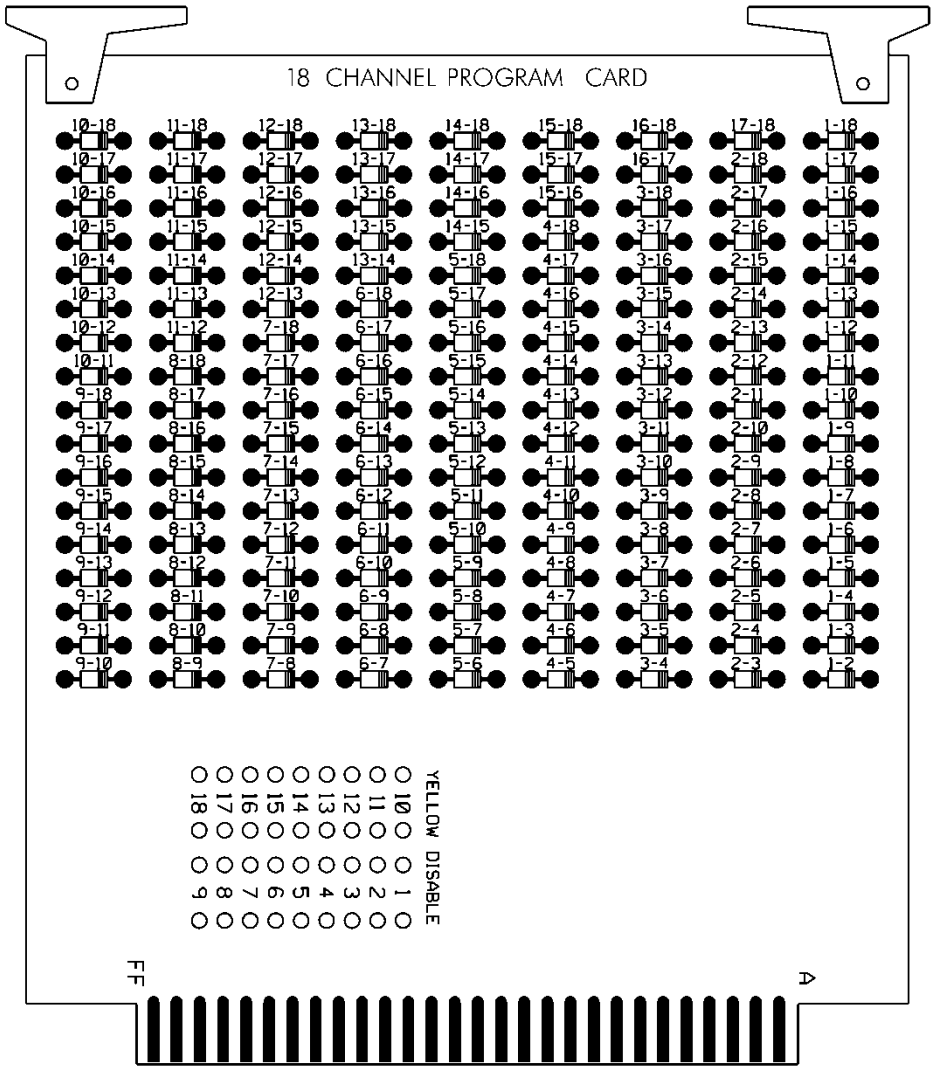

6.4. MATERIALS – TYPE 170 DETECTOR SENSOR UNITS

Furnish detector sensor units that comply with Chapter 5 Section 1, “General Requirements,” and Chapter 5 Section 2, “Model 222 & 224 Loop Detector Sensor Unit Requirements,” of the CALTRANS “Transportation Electrical Equipment Specifications” dated March 12, 2009 with Erratum 1.

6.5. MATERIALS – TYPE 2070E CONTROLLERS

Conform to CALTRANS *Transportation Electrical Equipment Specifications* (TEES) (dated March 12, 2009, plus Errata 1 dated January 21, 2010) except as required herein.

Furnish Model 2070E controllers. Ensure that removal of the CPU module from the controller will place the intersection into flash.

The Department will provide software at the beginning of the burning-in period. Contractor shall give 5 working days notice before needing software. Program software provided by the Department.

Provide Model 2070E controllers with the latest version of OS9 operating software and device drivers, composed of the unit chassis and at a minimum the following modules and assemblies:

- MODEL 2070-1E, CPU Module, Single Board, with 8Mb Datakey (blue in color)
- MODEL 2070-2A or approved MODEL 2070-2E, Field I/O Module (FI/O)
  - Note: Configure the Field I/O Module to disable both the External WDT Shunt/Toggle Switch and SP3 (SP3 active indicator is “off”)
- MODEL 2070-3B, Front Panel Module (FP), Display B (8x40)
- MODEL 2070-4, Power Supply Module, 10 AMP
- MODEL 2070-7A, Async Serial Com Module (9-pin RS-232)

Furnish one additional MODEL 2070-7A, Async Serial Com Module (9-pin RS-232) for all master controller locations.

For each master location and central control center, furnish a U.S. Robotics V.92 or approved equivalent auto-dial/auto-answer external modem to accomplish the interface to the Department-furnished microcomputers. Include all necessary hardware to ensure telecommunications.

ECS-1

B-3159 **Davidson County**

PROJECT SPECIAL PROVISIONS
ELECTRICAL CONDUIT SYSTEM

1.0 DESCRIPTION:

The work covered by this section consists of furnishing and installing one conduit system embedded in the Classic Concrete Bridge Rail. The conduit system in the Classic Concrete Bridge Rail includes anchor bolts for light standard attachment by others. Anchor bolts will be incidental to the cost of the vertical concrete barrier. Perform all work in accordance with these special provisions, the plans, the National Electrical Code (NEC), and Division 14 of the North Carolina Department of Transportation “Standard Specifications for Roads and Structures.”

The Contractor actually performing the work described in these special provisions shall have a license of the proper classification from the North Carolina State Board of Examiners of Electrical Contractors.

The licensed Electrical Contractor must be available on the job site when the work is being performed or when requested by the Engineer. The licensed Electrical Contractor shall have a set of plans and special provisions in his possession on the job site, and must maintain accurate "as built" plans.

2.0 MATERIALS:

Submit copies of catalog cuts and/or drawings for all proposed materials for the Engineer's review and approval. Include the brand name, stock number, description, size, rating, manufacturing specification, and applicable contract item number(s) on each submittal. Allow forty (40) days for submittal review. The Engineer will advise the Contractor of reasons for rejected submittals and will return approved submittals to the Contractor. Do not deliver material to the project prior to submittal approval.

2.1 Conduit System in the Classic Concrete Bridge Rail

Non-metallic conduit shall be rigid PVC (Polyvinyl chloride) heavy wall approved for above ground and underground use per U.L. 651 “Schedule 40, 80 Type E B and A Rigid PVC Conduit and Fittings”. Use Terminations designed for PVC conduit, to seal and stub out each PVC conduit, and to provide watertight protection.

Type BR junction box shall be NEMA Type-4 cast iron, hot-dipped galvanized with recess flange for flush mounting sized as shown on the plans. It shall have a neoprene gasketed cover with brass or stainless steel screws and shall be suitable for a watertight installation. A mounting button with a blind tapped bolt hole shall be provided on the interior for future connection of a grounding lug.

2.2 Miscellaneous

Use mastic that is a permanent, non-hardening, water sealing compound that adheres to metal, plastic, and concrete.

Provide jute that is a burlap-like material used for filling voids and protecting components from waterproofing and adhesive compounds.

Provide zinc rich paint conforming to Section 1080-9 of the Standard Specifications.

Provide pull lines specifically designed for pulling rope through conduit. Use pull lines made of 2-ply line, with a tensile strength of (240 pounds) minimum. Use rot and mildew resistant pull lines that are resistant to tangling when being dispensed.

The light standard manufacturer shall provide anchor bolts, nuts, washer and shims.

3.0 CONSTRUCTION METHODS:

3.1 Conduit System in the Classic Concrete Bridge Rail

Securely fasten all conduit and boxes prior to placing any concrete. After the conduit is encased in concrete, clean each conduit by snaking with a steel band that has an approved tube cleaner, equipped with a mandrel of a diameter not less than 85% of the nominal inside diameter of the conduit. To ensure against corrosion in the areas where hot dipped galvanizing has been damaged, cover all raw metal surfaces with a cold galvanized, zinc rich paint.

Stub the conduit out at an accessible location and seal with termination kits designed specifically for that purpose. Use termination kits of the same material as the conduit. Place backfill in accordance with Section 300-7 of the Standard Specifications. Conduit may enter junction boxes through field drilled holes protected with zinc rich paint before the conduit is inserted. Use threaded adapter and PVC bushing at all junction box to conduit connections. Install a pull line in each conduit for future use. Leave sufficient slack for attachment of a rope that will be used to install conductors. Coordinate electrical conduit system work with work by others. Allow installation of circuitry and light standards as directed by the Engineer.

Install anchor bolts according to light standard manufacturer’s recommendations. Protect exposed threaded portion of anchor bolts, to guard against damage from concrete installation.

All work must be inspected and approved by the Engineer before concealment.

4.0 MEASUREMENT AND PAYMENT:

No direct measurement will be made for the conduit system(s), since it will be paid for on a lump sum basis.

Payment for the conduit system(s) will be made at the contract lump sum price for "Electrical Conduit System at Station ".

ECS-3

B-3159 **Davidson County**

Such price and payment for the conduit system as provided above will be considered full compensation for all materials, equipment, and labor necessary to complete the work in accordance with the plans and these special provisions.

Payment will be made under:

Electrical Conduit System at Station 13+41.72 -L- _____Lump Sum

NORTH CAROLINA PROFESSIONAL SEAL 022582 ENGINEER PAUL KI-BUN CHAN

DocuSigned by:
Paul Chan
F83C4985EEEF4A2...

7/15/2015

ST-1

Project B-3159 **Davidson County**

Project Special Provisions
Structure

Table of Contents

		Page #
Maintenance and Protection of Traffic Beneath Proposed Structure at Station 13+41.72 -L-	(8-13-04)	ST-2
Placing Load on Structure Members	(11-27-12)	ST-3
Steel Reinforced Elastomeric Bearings	(11-27-12)	ST-3
Thermal Sprayed Coatings (Metallization)	(9-30-11)	ST-3
Expansion Joint Seals	(9-30-11)	ST-7
Sound Barrier Wall	(6-19-15)	ST-10
Falsework and Formwork	(4-5-12)	ST-14
Submittal of Working Drawings	(6-19-15)	ST-20
Crane Safety	(8-15-05)	ST-26
Grout for Structures	(9-30-11)	ST-26
Removal of Existing Structure at Station 13+41.72 -L-	(Special)	ST-28
Classic Concrete Bridge Rail	(Special)	ST-29
Patterned Concrete Sidewalk	(Special)	ST-30
Architectural Concrete Surface Treatment	(Special)	ST-30

For Piles and MSE Retaining Walls, see Geotechnical special provisions.

NORTH CAROLINA PROFESSIONAL SEAL 21638 ENGINEER LAURA E. SUTTON

DocuSigned by:
Laura E. Sutton
AE35E3E6727640E...
8/20/2015

PROJECT SPECIAL PROVISIONS
STRUCTURE

PROJECT B-3159 **DAVIDSON COUNTY**

MAINTENANCE AND PROTECTION OF TRAFFIC BENEATH PROPOSED STRUCTURE AT STATION 13+41.72 -L- **(8-13-04)**

1.0 GENERAL

Maintain traffic on -Y- (US 29-64-70 / I-85 Business Loop) as shown in Traffic Management Plans and as directed by the Engineer.

Provide a minimum temporary vertical clearance of 14.0' at all times during construction.

Submit plans and calculations for review and approval for protecting traffic and bracing girders, as described herein, at the above station before beginning work at this location. Have the drawings and design calculations prepared, signed, and sealed by a North Carolina Registered Professional Engineer. The approval of the Engineer will not relieve the Contractor of the responsibility for the safety of the method or equipment.

2.0 PROTECTION OF TRAFFIC

Protect traffic from any operation that affords the opportunity for construction materials, equipment, tools, etc. to be dropped into the path of traffic beneath the structure. Based on Contractor means and methods determine and clearly define all dead and live loads for this system, which, at a minimum, shall be installed between beams or girders over any travelway or shoulder area where traffic is maintained. Install the protective system before beginning any construction operations over traffic. In addition, for these same areas, keep the overhang falsework in place until after the rails have been poured.

3.0 BRACING GIRDERS

Brace girders to resist wind forces, weight of forms and other temporary loads, especially those eccentric to the vertical axis of the member during all stages of erection and construction. Before casting of intermediate diaphragms, decks, or connecting steel diaphragms do not allow the horizontal movement of girders to exceed ½ inch.

4.0 BASIS OF PAYMENT

Payment at the contract unit prices for the various pay items will be full compensation for the above work.

PLACING LOAD ON STRUCTURE MEMBERS (11-27-12)

The 2012 Standard Specifications shall be revised as follows:

In **Section 420-20 – Placing Load on Structure Members** replace the first sentence of the fifth paragraph with the following:

Do not place vehicles or construction equipment on a bridge deck until the deck concrete develops the minimum specified 28 day compressive strength and attains an age of at least 7 curing days.

STEEL REINFORCED ELASTOMERIC BEARINGS (11-27-12)

The 2012 Standard Specifications shall be revised as follows:

In **Section 1079-1 – Preformed Bearing Pads** add the following after the second paragraph:

Internal holding pins are required for all shim plates when the contract plans indicate the structure contains the necessary corrosion protection for a corrosive site.

Repair laminated (reinforced) bearing pads utilizing external holding pins via vulcanization. Submit product data for repair material and a detailed application procedure to the Materials and Tests Unit for approval before use and annually thereafter.

THERMAL SPRAYED COATINGS (METALLIZATION) (9-30-11)

1.0 DESCRIPTION

Apply a thermal sprayed coating (TSC) and sealer to metal surfaces as specified herein when called for on the plans or by other Special Provisions, or when otherwise approved by the Engineer in accordance with the SSPC-CS 23.00/AWS C2.23/NACE No. 12 Specification. Only Arc Sprayed application methods are used to apply TSC coatings, the Engineer must approve other methods of application.

2.0 QUALIFICATIONS

Only use NCDOT approved TSC Contractors meeting the following requirements:

1. The capability of blast cleaning steel surfaces to SSPC SP-5 and SP-10 Finishes.

2. Employ Spray Operator(s) qualified in accordance with AWS C.16/C2.16M2002 and Quality Control Inspector(s) who have documented training in the applicable test procedures of ASTM D-3276 and SSPC-CS 23.00.

A summary of the contractor's related work experience and the documents verifying each Spray Operator's and Quality Control Inspector's qualifications are submitted to the Engineer before any work is performed.

3.0 MATERIALS

Provide wire in accordance with the metallizing equipment manufacturer's recommendations. Use the wire alloy specified on the plans which meets the requirements in Annex **C** of the SSPC-CS 23.00 Specification. Have the contractor provide a certified analysis (NCDOT Type 2 Certification) for each lot of wire material.

Apply an approved sealer to all metallized surfaces in accordance with Section 9 of SSPC-CS 23. The sealer must either meet SSPC Paint 27 or is an alternate approved by the Engineer.

4.0 SURFACE PREPARATION AND TSC APPLICATION

Grind flame cut edges to remove the carbonized surface prior to blasting. Bevel all flame cut edges in accordance with Article 442-10(D) regardless of included angle. Blast clean surfaces to be metallized with grit or mineral abrasive in accordance with Steel Structures Painting Council SSPC SP-5/10(as specified) to impart an angular surface profile of 2.5 - 4.0 mils. Surface preparation hold times are in accordance with Section 7.32 of SSPC-CS 23. If flash rusting occurs prior to metallizing, blast clean the metal surface again. Apply the thermal sprayed coating only when the surface temperature of the steel is at least 5°F above the dew point.

At the beginning of each work period or shift, conduct bend tests in accordance with Section 6.5 of SSPC-CS 23.00. Any disbonding or delamination of the coating that exposes the substrate requires corrective action, additional testing, and the Engineer's approval before resuming the metallizing process.

Apply TSC with the alloy to the thickness specified on the plans or as provided in the table below. All spot results (the average of 3 to 5 readings) must meet the minimum requirement. No additional tolerance (as allowed by SSPC PA-2) is permitted. (For Steel Beams: For pieces with less than 200 ft^2 measure 2 spots/surface per piece and for pieces greater than 200 ft^2 add 1 additional spots/surface for each 500 ft^2).

Application	Thickness	Alloy	Seal Coat
Pot Bearings	8 mil	85/15 Zinc (W-Zn-Al-2)	0.5 mil
Armored Joint Angles	8 mil	85/15 Zinc (W-Zn-Al-2)	0.5 mil
Modular Joints	8 mil	99.99% Zn (W-Zn-1)	0.5 mil
Expansion Joint Seals	8 mil	99.99% Zn (W-Zn-1)	0.5 mil
Optional Disc Bearings	8 mil	85/15 Zinc (W-Zn-Al-2)	0.5 mil

When noted on the plans or as specified in the above chart, apply the sealer to all metallized surfaces in accordance with the manufacturer's recommendations and these provisions. Apply the seal coat only when the air temperature is above 40°F and the surface temperature of the steel is at least 5°F above the dew point. If the sealer is not applied within eight hours after the final application of TSC, the applicator verifies

acceptable TSC surfaces and obtains approval from the Engineer before applying the sealer.

5.0 INSPECTION FREQUENCY

The TSC Contractor must conduct the following tests at the specified frequency and the results documented in a format approved by the Engineer.

Test/Standard	Location	Frequency	Specification
Ambient Conditions	Site	Each Process	5°F above the dew point
Abrasive Properties	Site	Each Day	Size, angularity, cleanliness
Surface Cleanliness SSPC Vis 1	All Surfaces	Visual All Surfaces	SSPC-SP-10 Atmospheric Service SSPC-SP - 5 Immersion Service
Surface Profile ASTM D-4417 Method C	Random Surfaces	3 per 500 ft^2	2.5 - 4.0 mils
Bend Test SSPC-CS 23.00	Site	5 per shift	Pass Visual
Thickness SSPC PA-2R SSPC-CS 23.00	Each Surface	Use the method in PA-2 Appendix 3 for Girders and Appendix 4 for frames and miscellaneous steel. See Note 1.	Zn - 8 mils minimum Al - 8 mils minimum Zn Al - 8 mils minimum Areas with more than twice the minimum thickness are inspected for compliance to the adhesion and cut testing requirements of this specification.
Adhesion ASTM 4541	Random Surfaces Splice Areas	1 set of 3 per 500 ft^2	Zn > 500 psi Al > 1000 psi Zn Al > 750 psi
Cut Test - SSPC-CS 23.00	Random Surfaces	3 sets of 3 per 500 ft^2	No peeling or delamination
Job Reference Std. SSPC-CS 23.00	Site	1 per job	Meets all the above requirements

6.0 REPAIRS

All Repairs are to be performed in accordance with the procedures below, depending on whether the repair surface is hidden or exposed. As an exception to the following, field welded splices on joint angles and field welding bearing plates to girders may be repaired in accordance with the procedures for hidden surfaces.

For hidden surfaces (including but not limited to interior girders, interior faces of exterior girders, and below-grade sections of piles):

1. Welding of metallized surfaces may be performed only if specifically permitted by the Engineer. Remove metallizing at the location of field welds by blast cleaning (SSPC SP-6 finish), or hand (SSPC SP-2 finish) or power tool cleaning (SSPC SP-3 finish) just prior to welding. Clean sufficiently to prevent contamination of the weld. All repairs to welded connections are metallized in accordance with SSPC CS 23.00.

2. Minor areas less than or equal to 0.1 ft^2 exposing the substrate are metallized in accordance with SSPC CS 23.00 or painted in accordance with ASTM A780, "Repair of Damaged and Uncoated Areas of Hot Dip Galvanized Coatings."

3. Large areas greater than 0.1 ft^2 exposing the substrate are metallized in accordance with SSPC CS 23.00.

4. Damaged (burnished) areas not exposing the substrate with less than the specified coating thickness are metallized in accordance with SSPC CS 23.00 or painted in accordance with ASTM A780, "Repair of Damaged and Uncoated Areas of Hot Dip Galvanized Coatings."

5. Damaged (burnished) areas not exposing the substrate with more than the specified coating thickness are not repaired.

6. Defective coating is repaired by either method 2 or 3 depending on the area of the defect.

For Exposed Surfaces (including but not limited to exterior faces of exterior girders and above-grade sections of piles):

1. Welding of metallized surfaces may be performed only if specifically permitted by the Engineer. Remove metallization at the location of field welds by blast cleaning (SSPC SP-6 finish), or hand (SSPC SP-2 finish) or power tool cleaning (SSPC SP-3 finish) just prior to welding. Clean sufficiently to prevent contamination of the weld. All repairs to welded connections are metallized in accordance with SSPC CS 23.00.

2. All areas exposing the substrate are metallized in accordance with SSPC CS 23.00

3. Defective coating is repaired by either method 2 or 3 depending on the area of the defect.

7.0 TWELVE MONTH OBSERVATION PERIOD

The contractor maintains responsibility for the coating system for a twelve (12) month observation period beginning upon the satisfactory completion of all the work required in the plans or as directed by the engineer. The contractor must guarantee the coating system under the payment and performance bond (refer to Article 109-10). To successfully

complete the observation period, the coating system must meet the following requirements after twelve(12) months service:

- No visible rust, contamination or application defect is observed in any coated area.
- Painted surfaces have a uniform color and gloss.
- Surfaces have an adhesion of no less than 500 psi when tested in accordance with ASTM D-4541.

8.0 BASIS OF PAYMENT

The contract price bid for the bridge component to which the coating is applied will be full compensation for the thermal sprayed coating.

EXPANSION JOINT SEALS (9-30-11)

1.0 GENERAL

The work covered by this Special Provision consists of furnishing and installing the expansion joint seals as shown on the contract drawings. All materials, labor, equipment and incidentals necessary for the proper installation of the expansion joint seals are included.

2.0 MATERIAL

Provide expansion joint seals capable of accommodating a total movement measured parallel to the centerline of the roadway as shown on plans.

Provide an elastomeric component for each expansion joint seal that is a continuous unit for the entire length of the joint. Do not field splice the elastomeric component. Only vulcanized shop splicing of the elastomeric component is permitted. The minimum length of an elastomeric component before shop splicing is 20 feet. However, one piece shorter than 20 feet is permitted. Provide an elastomeric component that is clearly shop marked to indicate the top side and joint location of the elastomeric component. On skewed bridges, or under unsymmetrical conditions, clearly mark the left side of the elastomeric component. Left is defined as being on the left when facing in the direction of increasing station. Inspect the seals upon receipt to ensure that the marks are clearly visible upon installation.

Make sure the convolution of the gland does not project above the top of the hold-down plates when the joint opening is in the most compressed condition. Use either elastic polychloroprene (neoprene) or ethyl propylene diene monomer (EPDM) for the elastomer that meets the following minimum properties:

	ASTM TEST METHOD	REQUIREMENTS
Hardness, Durometer - Shore A	D2240	60 ± 5, Neoprene (upward corrugated shape - fabric reinforced) 75 ± 5, EPDM and Neoprene (upward non-corrugated shape) 80 ± 5, EPDM (upward corrugated shape-fabric reinforced)
Tensile Strength	D412	2000 psi (min.)
Elongation at Break	D412	250% (min.)
Width of Gland in Relaxed Condition	N/A	10" ± 0.25"
Thickness of Upturned portion of gland	N/A	0.25" non-corrugated shape, -0.032" to +0.032"
Thickness of Upturned portion of gland	N/A	0.1875" corrugated shape, -0.032" to +0.032"
Thickness of Flat portion of gland	N/A	0.1563", -0.032" to +0.032"

For fabric reinforced glands, submit one unreinforced sample per lot number, up to 500 feet of Expansion Joint Seal, to the Engineer for testing.

Only field splice hold-down plates at crown points, at abrupt changes in the deck slab cross slope, and on lane lines. Splicing within travel lanes is not permitted and splicing on edge lines is not required. Field splice hold-down plates between the edge line and gutter upturn and where necessary for proper installation and alignment is permitted. Show all splice locations on the working drawings for approval. For the location of lane markings at the expansion joint seal, see the Structure plans. At the splice locations, locate the hold-down bolts 3 inches from the end of the hold-down plate. At splice locations where changes in deck slab cross slope occur, cut the ends of hold-down plates parallel to the bridge centerline for skews less than 80° and greater than 100°.

Do not use welded shop splices in hold-down plates.

3.0 SHOP DRAWINGS

Submit nine sets of working drawings to the Engineer for review, comments and acceptance. Show complete details drawn to scale and include:

- The proposed template details including the makeup of the template
- The proposed method of holding the base angle assembly in place while concrete is cast around it

- The proposed procedure to correct for the effects of beam movement and rotation when setting width of joint opening
- The proposed chronology of installation including the sequence and direction of the concrete casting
- The details of cross connectors between base angles, such as steel bars with slots bolted to angles, to maintain evenness between the adjacent base angles while accommodating movement that occurs when concrete is cast. Indicate when bolts are loosened to allow movement.
- The proposed method for removing the hold-down plate
- A section detail through the joint showing horizontal offset dimensions of the base angles from the centerline joint. This detail is required when the vertical face of the joint opening is not perpendicular to the roadway surface (e.g. when the roadway grade is significant).

Have someone other than the one who prepares the drawing check all detailed drawings and include the signatures of both the drafter and checker on each sheet of the drawings. The Engineer returns unchecked drawings to the Contractor. Provide all completed drawings well in advance of the scheduled installation time for the expansion joint seal.

4.0 INSTALLATION

Provide supports for the base angle assembly at a maximum spacing of 9 feet. Place supports near field splices of base angles to ensure that field splices are straight and even. Provide base angles with ½" diameter weep holes at 12 inch centers to allow bleeding of trapped air and/or water. Do not obstruct the weep holes with falsework. Make the bottom of the trough parallel to grade and the sides parallel to the sides of the expansion joint seal.

For damaged areas, depressions, spalls, cracks, or irregularities of curbs or decks adjacent to the expansion joint, submit a proposed method of repair and repair material specifications for approval.

If the Engineer deems any aspects of the expansion joint seals unacceptable, make necessary corrections.

5.0 INSPECTION

When concrete is cast, use a non-aluminum, 10 foot, true to line straight edge to check and grade the top of the slab on each side of the joint to ensure smooth transition between spans.

<u>Watertight Integrity Test</u>

- Upon completion of an expansion joint seal, perform a water test on the top surface to detect any leakage. Cover the roadway section of the joint from curb to curb, or barrier rail to barrier rail, with water, either ponded or flowing, not less than 1 inch above the roadway surface at all points. Block sidewalk sections and secure an

unnozzled water hose delivering approximately 1 gallon of water per minute to the inside face of the bridge railing, trained in a downward position about 6 inches above the sidewalks, such that there is continuous flow of water across the sidewalk and down the curb face of the joint.

- Maintain the ponding or flowing of water on the roadway and continuous flow across sidewalks and curbs for a period of 5 hours. At the conclusion of the test, the underside of the joint is closely examined for leakage. The expansion joint seal is considered watertight if no obvious wetness is visible on the Engineer's finger after touching a number of underdeck areas. Damp concrete that does not impart wetness to the finger is not a sign of leakage.
- If the joint system leaks, locate the place(s) of leakage and take any repair measures necessary to stop the leakage at no additional cost to the Department. Use repair measures recommended by the manufacturer and approved by the Engineer prior to beginning corrective work.
- If measures to eliminate leakage are taken, perform a subsequent water integrity test subject to the same conditions as the original test. Subsequent tests carry the same responsibility as the original test and are performed at no extra cost to the Department.

6.0 BASIS OF PAYMENT

Basis of payment for all expansion joint seals will be at the lump sum contract price for "Expansion Joint Seals" which price and payment will be full compensation for furnishing all material, including any steel accessory plates for sidewalks, medians and rails, labor, tools, and incidentals necessary for installing the expansion joint seal in place and including all materials, labor, tools and incidentals for performing the original watertight integrity test.

SOUND BARRIER WALL (6-19-15)

1.0 DESCRIPTION

This work consists of furnishing precast panels, structural steel, concrete, and all other materials; handling, transporting, fabricating, galvanizing, and storing materials; furnishing erection drawings, pile excavation, backfilling, erecting and installing the sound barrier wall members and all other materials as required by the plans, Standard Specifications and this Special Provision.

The Standard Plans allow a pile spacing of 10, 15 or 20 feet. Pile spacing greater than 15 feet will not be allowed for standard precast concrete panels. Provide consistent pile spacing the entire length of the wall. Use odd pile spacing, if necessary, only at the ends of the wall and at turning points as approved by the Engineer.

A maximum one foot drop or rise in elevation between wall sections is permitted. Elevation changes greater than one foot, if necessary, will be allowed only at the end of the wall. Top of wall elevation changes that result in a jagged appearance will not be allowed.

2.0 ALTERNATE PILE SPACING FOR STANDARD PRECAST PANELS

As an alternate, the Contractor may submit plans for pile spacing greater than 10 feet and less than 15 feet for review and approval. The excavated diameter, excavation depth and reinforcing steel shall be equal to the amount shown on the existing plans for the 15 feet pile spacing. A variance in the reinforcing steel will be allowed for the length of horizontal and number of vertical reinforcement bars in the precast panel for the alternate pile spacing.

Submit two sets of detailed plans for review. Include all details in the plans, including the size and spacing of required reinforcement necessary to fabricate the precast panels. Have a North Carolina Registered Professional Engineer check, seal and date the plans. After the plans are reviewed and, if necessary, the corrections made, submit one set of reproducible tracings on 22" x 34" sheets to become part of the contract plans.

3.0 ALTERNATE WALL TYPE

Walls that have been assigned “Approved” or “Approved for Provisional Use” status by the Product Evaluation Program will be considered for substitution to the detailed Standard Sound Barrier Wall only when noted on the plans. Alternate wall types, piles and pile spacing must meet the design and construction requirements of the project. Pile spacing greater than 20 feet will not be permitted. Alternate pile and wall structural stability and connection details shall conform to the current edition of the AASHTO LRFD Bridge Design Specifications.

Prior to submittal of Working Drawings, as described herein, submit a copy of the signed NCDOT Product Status Notification Letter and two sets of preliminary plans for review and approval. Include material specifications for all components. Once preliminary plans are approved, submit Working Drawings in accordance with all applicable portions of the requirements herein, including details necessary to fabricate and construct the proposed alternate.

Have a North Carolina Registered Professional Engineer check, seal and date the plans and, when requested, calculations. After the plans are reviewed and, if necessary, corrections made, submit one set of reproducible tracings on 22" x 34" sheets to become part of the contract plans.

4.0 MATERIALS AND FABRICATION OF STANDARD PRECAST PANELS

Provide materials and fabricate members in accordance with the requirements of Division 10 of the Standard Specifications for Roads and Structures.

Provide precast panels that are 4 inches ± ¼ inch thick with an exposed aggregate finish on one face. The panel face with the aggregate finish shall be installed facing the roadway. The depth of the exposure is required to range from 0 to ¼ inch. Furnish three 12" x 12" samples for approval which establish the acceptable variations in color, texture, and uniformity. After the color, texture, and uniformity of the furnished samples are approved, produce a full scale panel unit meeting design requirements. This mock-up and the

furnished samples establish the standard quality for determining acceptance of the panels. When producing the final installed panels, use fine and coarse aggregate, retarder, and cement from the same source as those used in the approved sample panels.

5.0 CONSTRUCTION METHODS

Complete the final survey of existing ground profile after clearing the wall area but prior to submitting any working drawings. Submit the final groundline survey with the working drawings.

If the Department is responsible for the survey, the Engineer field verifies the existing ground profile along the sound barrier wall. Contact the Engineer to obtain the survey information. Otherwise, complete the existing ground survey prior to submittal of working drawings.

Excavate holes with the diameters shown on the plans. Perform pile excavation to the depths shown on the plans and install piles as shown on the plans or in the accepted submittals with a tolerance of 1/2 inch per foot from vertical. Backfill excavations with concrete after placing piles.

A. Pile Excavation

Use equipment of adequate capacity and capable of drilling through soil and non-soil including rock, boulders, debris, man-made objects and any other materials encountered. Blasting is not permitted to advance the excavation. Blasting for core removal is only permitted when approved by the Engineer. Dispose of drilling spoils in accordance with Section 802 of the Standard Specifications and as directed by the Engineer. Drilling spoils consist of all excavated material including water removed from the excavation either by pumping or drilling tools.

If unstable, caving or sloughing soils are anticipated or encountered, stabilize excavations with either slurry or steel casing. When using slurry, submit slurry details including product information, manufacturer's recommendations for use, slurry equipment information and written approval from the slurry supplier that the mixing water is acceptable before beginning drilling. When using steel casing, use either the sectional type or one continuous corrugated or non-corrugated piece. Steel casings should consist of clean watertight steel of ample strength to withstand handling and driving stresses and the pressures imposed by concrete, earth or backfill. Use steel casings with an outside diameter equal to the hole size and a minimum wall thickness of 1/4 inch.

B. Concrete Placement

Before placing concrete, center and support the pile in the excavation and check the water inflow rate in the excavation after any pumps have been removed. If the inflow rate is less than 6 inches per half hour, remove any water and free fall the concrete into the excavation. Ensure that concrete flows completely around the pile. If the water inflow rate is greater than 6 inches per half hour, propose a concrete placement

procedure to the Engineer. The Engineer shall approve the concrete placement procedure before placing concrete.

Fill the excavation with Class A concrete in accordance with Section 1000 of the Standard Specifications except as modified herein. Provide concrete with a slump of 6 to 8 inches. Use an approved high-range water reducer to achieve this slump. Place concrete in a continuous manner and remove all casings.

6.0 WORKING DRAWINGS

Submit casting drawings for the precast face panels for approval in accordance with Article 1077-2 of the Standard Specifications prior to casting. Show the inserts, method of handling, and support details used for transportation on casting drawings. Submit metalwork fabrication drawings for approval prior to fabrication of steel wall components. Submit an erection plan and concrete face panel placing plan, including location of various heights of panels, for review and acceptance prior to fabrication of metalwork. Submit five sets of detail drawings.

7.0 METHOD OF MEASUREMENT

The quantity of sound barrier wall to be paid will be the actual square feet of completed and accepted wall. In any individual section of sound barrier wall or in comparably dimensioned sections, the wall height is from the bottom of the bottom panel to the top of the top panel and the width is the distance between the centerline of the piles at the ends of the section. Include the full width of the piles at the ends of the wall.

8.0 BASIS OF PAYMENT

The quantity of sound barrier wall, measured as provided above, will be paid for at the contract unit price bid per square foot for “Sound Barrier Wall”.

The unit price bid per square foot will be full compensation for all work covered by this Special Provision including, but not limited to, furnishing precast panels, steel or concrete piles, miscellaneous structural steel, concrete, and all other materials; handling, transporting, fabricating, galvanizing, and storing materials; furnishing erection drawings, backfilling, pile excavation including any casing or slurry, and erecting and installing the sound barrier wall members.

Payment will be made under:

Sound Barrier Wall..... Square Foot

FALSEWORK AND FORMWORK **(4-5-12)**

1.0 DESCRIPTION

Use this Special Provision as a guide to develop temporary works submittals required by the Standard Specifications or other provisions; no additional submittals are required herein. Such temporary works include, but are not limited to, falsework and formwork.

Falsework is any temporary construction used to support the permanent structure until it becomes self-supporting. Formwork is the temporary structure or mold used to retain plastic or fluid concrete in its designated shape until it hardens. Access scaffolding is a temporary structure that functions as a work platform that supports construction personnel, materials, and tools, but is not intended to support the structure. Scaffolding systems that are used to temporarily support permanent structures (as opposed to functioning as work platforms) are considered to be falsework under the definitions given. Shoring is a component of falsework such as horizontal, vertical, or inclined support members. Where the term "temporary works" is used, it includes all of the temporary facilities used in bridge construction that do not become part of the permanent structure.

Design and construct safe and adequate temporary works that will support all loads imposed and provide the necessary rigidity to achieve the lines and grades shown on the plans in the final structure.

2.0 MATERIALS

Select materials suitable for temporary works; however, select materials that also ensure the safety and quality required by the design assumptions. The Engineer has authority to reject material on the basis of its condition, inappropriate use, safety, or nonconformance with the plans. Clearly identify allowable loads or stresses for all materials or manufactured devices on the plans. Revise the plan and notify the Engineer if any change to materials or material strengths is required.

3.0 DESIGN REQUIREMENTS

A. Working Drawings

Provide working drawings for items as specified in the contract, or as required by the Engineer, with design calculations and supporting data in sufficient detail to permit a structural and safety review of the proposed design of the temporary work.

On the drawings, show all information necessary to allow the design of any component to be checked independently as determined by the Engineer.

When concrete placement is involved, include data such as the drawings of proposed sequence, rate of placement, direction of placement, and location of all construction joints. Submit the number of copies as called for by the contract.

When required, have the drawings and calculations prepared under the guidance of, and sealed by, a North Carolina Registered Professional Engineer who is knowledgeable in temporary works design.

If requested by the Engineer, submit with the working drawings manufacturer's catalog data listing the weight of all construction equipment that will be supported on the temporary work. Show anticipated total settlements and/or deflections of falsework and forms on the working drawings. Include falsework footing settlements, joint take-up, and deflection of beams or girders.

As an option for the Contractor, overhang falsework hangers may be uniformly spaced, at a maximum of 36 inches, provided the following conditions are met:

Member Type (PCG)	Member Depth, (inches)	Max. Overhang Width, (inches)	Max. Slab Edge Thickness, (inches)	Max. Screed Wheel Weight, (lbs.)	Bracket Min. Vertical Leg Extension, (inches)
II	36	39	14	2000	26
III	45	42	14	2000	35
IV	54	45	14	2000	44
MBT	63	51	12	2000	50
MBT	72	55	12	1700	48

Overhang width is measured from the centerline of the girder to the edge of the deck slab.

For Type II, III & IV prestressed concrete girders (PCG), 45-degree cast-in-place half hangers and rods must have a minimum safe working load of 6,000 lbs.

For MBT prestressed concrete girders, 45-degree angle holes for falsework hanger rods shall be cast through the girder top flange and located, measuring along the top of the member, 1'-2 ½" from the edge of the top flange. Hanger hardware and rods must have a minimum safe working load of 6,000 lbs.

The overhang bracket provided for the diagonal leg shall have a minimum safe working load of 3,750 lbs. The vertical leg of the bracket shall extend to the point that the heel bears on the girder bottom flange, no closer than 4 inches from the bottom of the member. However, for 72-inch members, the heel of the bracket shall bear on the web, near the bottom flange transition.

Provide adequate overhang falsework and determine the appropriate adjustments for deck geometry, equipment, casting procedures and casting conditions.

If the optional overhang falsework spacing is used, indicate this on the falsework submittal and advise the girder producer of the proposed details. Failure to notify the

Engineer of hanger type and hanger spacing on prestressed concrete girder casting drawings may delay the approval of those drawings.

Falsework hangers that support concentrated loads and are installed at the edge of thin top flange concrete girders (such as bulb tee girders) shall be spaced so as not to exceed 75% of the manufacturer's stated safe working load. Use of dual leg hangers (such as Meadow Burke HF-42 and HF-43) are not allowed on concrete girders with thin top flanges. Design the falsework and forms supporting deck slabs and overhangs on girder bridges so that there will be no differential settlement between the girders and the deck forms during placement of deck concrete.

When staged construction of the bridge deck is required, detail falsework and forms for screed and fluid concrete loads to be independent of any previous deck pour components when the mid-span girder deflection due to deck weight is greater than ¾".

Note on the working drawings any anchorages, connectors, inserts, steel sleeves or other such devices used as part of the falsework or formwork that remains in the permanent structure. If the plan notes indicate that the structure contains the necessary corrosion protection required for a Corrosive Site, epoxy coat, galvanize or metalize these devices. Electroplating will not be allowed. Any coating required by the Engineer will be considered incidental to the various pay items requiring temporary works.

Design falsework and formwork requiring submittals in accordance with the 1995 AASHTO *Guide Design Specifications for Bridge Temporary Works* except as noted herein.

1. Wind Loads

   Table 2.2 of Article 2.2.5.1 is modified to include wind velocities up to 110 mph. In addition, Table 2.2A is included to provide the maximum wind speeds by county in North Carolina.

Table 2.2 - Wind Pressure Values

Height Zone	Pressure, lb/ft^2 for Indicated Wind Velocity, mph				
feet above ground	70	80	90	100	110
0 to 30	15	20	25	30	35
30 to 50	20	25	30	35	40
50 to 100	25	30	35	40	45
over 100	30	35	40	45	50

2. Time of Removal

The following requirements replace those of Article 3.4.8.2.

Do not remove forms until the concrete has attained strengths required in Article 420-16 of the Standard Specifications and these Special Provisions.

Do not remove forms until the concrete has sufficient strength to prevent damage to the surface.

Table 2.2A - Steady State Maximum Wind Speeds by Counties in North Carolina

COUNTY	25 YR (mph)	COUNTY	25 YR (mph)	COUNTY	25 YR (mph)
Alamance	70	Franklin	70	Pamlico	100
Alexander	70	Gaston	70	Pasquotank	100
Alleghany	70	Gates	90	Pender	100
Anson	70	Graham	80	Perquimans	100
Ashe	70	Granville	70	Person	70
Avery	70	Greene	80	Pitt	90
Beaufort	100	Guilford	70	Polk	80
Bertie	90	Halifax	80	Randolph	70
Bladen	90	Harnett	70	Richmond	70
Brunswick	100	Haywood	80	Robeson	80
Buncombe	80	Henderson	80	Rockingham	70
Burke	70	Hertford	90	Rowan	70
Cabarrus	70	Hoke	70	Rutherford	70
Caldwell	70	Hyde	110	Sampson	90
Camden	100	Iredell	70	Scotland	70
Carteret	110	Jackson	80	Stanley	70
Caswell	70	Johnston	80	Stokes	70
Catawba	70	Jones	100	Surry	70
Cherokee	80	Lee	70	Swain	80
Chatham	70	Lenoir	90	Transylvania	80
Chowan	90	Lincoln	70	Tyrell	100
Clay	80	Macon	80	Union	70
Cleveland	70	Madison	80	Vance	70
Columbus	90	Martin	90	Wake	70
Craven	100	McDowell	70	Warren	70
Cumberland	80	Mecklenburg	70	Washington	100
Currituck	100	Mitchell	70	Watauga	70

Table 2.2A - Steady State Maximum Wind Speeds by Counties in North Carolina

COUNTY	25 YR (mph)	COUNTY	25 YR (mph)	COUNTY	25 YR (mph)
Dare	110	Montgomery	70	Wayne	80
Davidson	70	Moore	70	Wilkes	70
Davie	70	Nash	80	Wilson	80
Duplin	90	New Hanover	100	Yadkin	70
Durham	70	Northampton	80	Yancey	70
Edgecombe	80	Onslow	100		
Forsyth	70	Orange	70		

B. Review and Approval

The Engineer is responsible for the review and approval of temporary works' drawings.

Submit the working drawings sufficiently in advance of proposed use to allow for their review, revision (if needed), and approval without delay to the work.

The time period for review of the working drawings does not begin until complete drawings and design calculations, when required, are received by the Engineer.

Do not start construction of any temporary work for which working drawings are required until the drawings have been approved. Such approval does not relieve the Contractor of the responsibility for the accuracy and adequacy of the working drawings.

4.0 CONSTRUCTION REQUIREMENTS

All requirements of Section 420 of the Standard Specifications apply.

Construct temporary works in conformance with the approved working drawings. Ensure that the quality of materials and workmanship employed is consistent with that assumed in the design of the temporary works. Do not weld falsework members to any portion of the permanent structure unless approved. Show any welding to the permanent structure on the approved construction drawings.

Provide tell-tales attached to the forms and extending to the ground, or other means, for accurate measurement of falsework settlement. Make sure that the anticipated compressive settlement and/or deflection of falsework does not exceed 1 inch. For cast-in-place concrete structures, make sure that the calculated deflection of falsework flexural members does not exceed 1/240 of their span regardless of whether or not the deflection is compensated by camber strips.

A. Maintenance and Inspection

Inspect and maintain the temporary work in an acceptable condition throughout the period of its use. Certify that the manufactured devices have been maintained in a condition to allow them to safely carry their rated loads. Clearly mark each piece so that its capacity can be readily determined at the job site.

Perform an in-depth inspection of an applicable portion(s) of the temporary works, in the presence of the Engineer, not more than 24 hours prior to the beginning of each concrete placement. Inspect other temporary works at least once a month to ensure that they are functioning properly. Have a North Carolina Registered Professional Engineer inspect the cofferdams, shoring, sheathing, support of excavation structures, and support systems for load tests prior to loading.

B. Foundations

Determine the safe bearing capacity of the foundation material on which the supports for temporary works rest. If required by the Engineer, conduct load tests to verify proposed bearing capacity values that are marginal or in other high-risk situations.

The use of the foundation support values shown on the contract plans of the permanent structure is permitted if the foundations are on the same level and on the same soil as those of the permanent structure.

Allow for adequate site drainage or soil protection to prevent soil saturation and washout of the soil supporting the temporary works supports.

If piles are used, the estimation of capacities and later confirmation during construction using standard procedures based on the driving characteristics of the pile is permitted. If preferred, use load tests to confirm the estimated capacities; or, if required by the Engineer conduct load tests to verify bearing capacity values that are marginal or in other high risk situations.

The Engineer reviews and approves the proposed pile and soil bearing capacities.

5.0 REMOVAL

Unless otherwise permitted, remove and keep all temporary works upon completion of the work. Do not disturb or otherwise damage the finished work.

Remove temporary works in conformance with the contract documents. Remove them in such a manner as to permit the structure to uniformly and gradually take the stresses due to its own weight.

6.0 METHOD OF MEASUREMENT

Unless otherwise specified, temporary works will not be directly measured.

7.0 BASIS OF PAYMENT

Payment at the contract unit prices for the various pay items requiring temporary works will be full compensation for the above falsework and formwork.

SUBMITTAL OF WORKING DRAWINGS (6-19-15)

1.0 GENERAL

Submit working drawings in accordance with Article 105-2 of the *Standard Specifications* and this provision. For this provision, "submittals" refers to only those listed in this provision. The list of submittals contained herein does not represent a list of required submittals for the project. Submittals are only necessary for those items as required by the contract. Make submittals that are not specifically noted in this provision directly to the Engineer. Either the Structures Management Unit or the Geotechnical Engineering Unit or both units will jointly review submittals.

If a submittal contains variations from plan details or specifications or significantly affects project cost, field construction or operations, discuss the submittal with and submit all copies to the Engineer. State the reason for the proposed variation in the submittal. To minimize review time, make sure all submittals are complete when initially submitted. Provide a contact name and information with each submittal. Direct any questions regarding submittal requirements to the Engineer, Structures Management Unit contacts or the Geotechnical Engineering Unit contacts noted below.

In order to facilitate in-plant inspection by NCDOT and approval of working drawings, provide the name, address and telephone number of the facility where fabrication will actually be done if different than shown on the title block of the submitted working drawings. This includes, but is not limited to, precast concrete items, prestressed concrete items and fabricated steel or aluminum items.

2.0 ADDRESSES AND CONTACTS

For submittals to the Structures Management Unit, use the following addresses:

Via US mail:
Mr. T. K. Koch, P. E.
State Structures Engineer
North Carolina Department of Transportation
Structures Management Unit
1581 Mail Service Center
Raleigh, NC 27699-1581
Attention: Mr. P. D. Lambert, P. E.

Via other delivery service:
Mr. T. K. Koch, P. E.
State Structures Engineer
North Carolina Department of Transportation
Structures Management Unit
1000 Birch Ridge Drive
Raleigh, NC 27610
Attention: Mr. P. D. Lambert, P. E.

Submittals may also be made via email. Send submittals to:

plambert@ncdot.gov (Paul Lambert)

Send an additional e-copy of the submittal to the following address:

jgaither@ncdot.gov (James Gaither)

mrorie@ncdot.gov (Madonna Rorie)

For submittals to the Geotechnical Engineering Unit, use the following addresses:

For projects in Divisions 1-7, use the following Eastern Regional Office address:

Via US mail:

Mr. K. J. Kim, Ph. D., P. E.
Eastern Regional Geotechnical Manager
North Carolina Department of Transportation
Geotechnical Engineering Unit
Eastern Regional Office
1570 Mail Service Center
Raleigh, NC 27699-1570

Via other delivery service:

Mr. K. J. Kim, Ph. D., P. E.
Eastern Regional Geotechnical Manager
North Carolina Department of Transportation
Geotechnical Engineering Unit
Eastern Regional Office
3301 Jones Sausage Road, Suite 100
Garner, NC 27529

For projects in Divisions 8-14, use the following Western Regional Office address:

Via US mail:

Mr. Eric Williams, P. E.
Western Regional Geotechnical Manager
North Carolina Department of Transportation
Geotechnical Engineering Unit
Western Regional Office
5253 Z Max Boulevard
Harrisburg, NC 28075

Via other delivery service:

Mr. Eric Williams, P. E.
Western Regional Geotechnical Manager
North Carolina Department of Transportation
Geotechnical Engineering Unit
Western Regional Office
5253 Z Max Boulevard
Harrisburg, NC 28075

The status of the review of structure-related submittals sent to the Structures Management Unit can be viewed from the Unit's web site, via the "Drawing Submittal Status" link.

Direct any questions concerning submittal review status, review comments or drawing markups to the following contacts:

Primary Structures Contact:	Paul Lambert	(919) 707-6407 (919) 250-4082 facsimile plambert@ncdot.gov
Secondary Structures Contacts:	James Gaither	(919) 707-6409 jgaither@ncdot.gov
	Madonna Rorie	(919) 707-6508 mrorie@ncdot.gov

Eastern Regional Geotechnical Contact (Divisions 1-7):	K. J. Kim	(919) 662-4710 (919) 662-3095 facsimile kkim@ncdot.gov
Western Regional Geotechnical Contact (Divisions 8-14):	Eric Williams	(704) 455-8902 (704) 455-8912 facsimile ewilliams3@ncdot.gov

3.0 SUBMITTAL COPIES

Furnish one complete copy of each submittal, including all attachments, to the Engineer. At the same time, submit the number of hard copies shown below of the same complete submittal directly to the Structures Management Unit and/or the Geotechnical Engineering Unit.

The first table below covers "Structure Submittals". The Engineer will receive review comments and drawing markups for these submittals from the Structures Management Unit. The second table in this section covers "Geotechnical Submittals". The Engineer will receive review comments and drawing markups for these submittals from the Geotechnical Engineering Unit.

Unless otherwise required, submit one set of supporting calculations to either the Structures Management Unit or the Geotechnical Engineering Unit unless both units require submittal copies in which case submit a set of supporting calculations to each unit. Provide additional copies of any submittal as directed.

STRUCTURE SUBMITTALS

Submittal	Copies Required by Structures Management Unit	Copies Required by Geotechnical Engineering Unit	Contract Reference Requiring Submittal [1]
Arch Culvert Falsework	5	0	Plan Note, SN Sheet & "Falsework and Formwork"
Box Culvert Falsework [7]	5	0	Plan Note, SN Sheet & "Falsework and Formwork"
Cofferdams	6	2	Article 410-4
Foam Joint Seals [6]	9	0	"Foam Joint Seals"
Expansion Joint Seals (hold down plate type with base angle)	9	0	"Expansion Joint Seals"

STRUCTURE SUBMITTALS

Submittal	Copies Required by Structures Management Unit	Copies Required by Geotechnical Engineering Unit	Contract Reference Requiring Submittal [1]
Expansion Joint Seals (modular)	2, then 9	0	"Modular Expansion Joint Seals"
Expansion Joint Seals (strip seals)	9	0	"Strip Seals"
Falsework & Forms [2] (substructure)	8	0	Article 420-3 & "Falsework and Formwork"
Falsework & Forms (superstructure)	8	0	Article 420-3 & "Falsework and Formwork"
Girder Erection over Railroad	5	0	Railroad Provisions
Maintenance and Protection of Traffic Beneath Proposed Structure	8	0	"Maintenance and Protection of Traffic Beneath Proposed Structure at Station ___"
Metal Bridge Railing	8	0	Plan Note
Metal Stay-in-Place Forms	8	0	Article 420-3
Metalwork for Elastomeric Bearings [4,5]	7	0	Article 1072-8
Miscellaneous Metalwork [4,5]	7	0	Article 1072-8
Disc Bearings [4]	8	0	"Disc Bearings"
Overhead and Digital Message Signs (DMS) (metalwork and foundations)	13	0	Applicable Provisions
Placement of Equipment on Structures (cranes, etc.)	7	0	Article 420-20
Precast Concrete Box Culverts	2, then 1 reproducible	0	"Optional Precast Reinforced Concrete Box Culvert at Station ___"
Prestressed Concrete Cored Slab (detensioning sequences) [3]	6	0	Article 1078-11

ST-24

B-3159 **Davidson Co.**

STRUCTURE SUBMITTALS

Submittal	Copies Required by Structures Management Unit	Copies Required by Geotechnical Engineering Unit	Contract Reference Requiring Submittal [1]
Prestressed Concrete Deck Panels	6 and 1 reproducible	0	Article 420-3
Prestressed Concrete Girder (strand elongation and detensioning sequences)	6	0	Articles 1078-8 and 1078-11
Removal of Existing Structure over Railroad	5	0	Railroad Provisions
Revised Bridge Deck Plans (adaptation to prestressed deck panels)	2, then 1 reproducible	0	Article 420-3
Revised Bridge Deck Plans (adaptation to modular expansion joint seals)	2, then 1 reproducible	0	"Modular Expansion Joint Seals"
Sound Barrier Wall (precast items)	10	0	Article 1077-2 & "Sound Barrier Wall"
Sound Barrier Wall Steel Fabrication Plans [5]	7	0	Article 1072-8 & "Sound Barrier Wall"
Structural Steel [4]	2, then 7	0	Article 1072-8
Temporary Detour Structures	10	2	Article 400-3 & "Construction, Maintenance and Removal of Temporary Structure at Station ____"
TFE Expansion Bearings [4]	8	0	Article 1072-8

FOOTNOTES

1. References are provided to help locate the part of the contract where the submittals are required. References in quotes refer to the provision by that name. Articles refer to the *Standard Specifications*.
2. Submittals for these items are necessary only when required by a note on plans.
3. Submittals for these items may not be required. A list of pre-approved sequences is available from the producer or the Materials & Tests Unit.

4. The fabricator may submit these items directly to the Structures Management Unit.
5. The two sets of preliminary submittals required by Article 1072-8 of the *Standard Specifications* are not required for these items.
6. Submittals for Fabrication Drawings are not required. Submittals for Catalogue Cuts of Proposed Material are required. See Section 5.A of the referenced provision.
7. Submittals are necessary only when the top slab thickness is 18" or greater.

GEOTECHNICAL SUBMITTALS

Submittal	Copies Required by Geotechnical Engineering Unit	Copies Required by Structures Management Unit	Contract Reference Requiring Submittal [1]
Drilled Pier Construction Plans [2]	1	0	Subarticle 411-3(A)
Crosshole Sonic Logging (CSL) Reports [2]	1	0	Subarticle 411-5(A)(2)
Pile Driving Equipment Data Forms [2,3]	1	0	Subarticle 450-3(D)(2)
Pile Driving Analyzer (PDA) Reports [2]	1	0	Subarticle 450-3(F)(3)
Retaining Walls [4]	8 drawings, 2 calculations	2 drawings	Applicable Provisions
Temporary Shoring [4]	5 drawings, 2 calculations	2 drawings	"Temporary Shoring" & "Temporary Soil Nail Walls"

FOOTNOTES

1. References are provided to help locate the part of the contract where the submittals are required. References in quotes refer to the provision by that name. Subarticles refer to the *Standard Specifications*.
2. Submit one hard copy of submittal to the Resident or Bridge Maintenance Engineer. Submit a second copy of submittal electronically (PDF via email) or by facsimile, US mail or other delivery service to the appropriate Geotechnical Engineering Unit regional office. Electronic submission is preferred.
3. The Pile Driving Equipment Data Form is available from:

   https://connect.ncdot.gov/resources/Geological/Pages/Geotech_Forms_Details.aspx

   See second page of form for submittal instructions.
4. Electronic copy of submittal is required. See referenced provision.

CRANE SAFETY (8-15-05)

Comply with the manufacturer specifications and limitations applicable to the operation of any and all cranes and derricks. Prime contractors, sub-contractors, and fully operated rental companies shall comply with the current Occupational Safety and Health Administration regulations (OSHA).

Submit all items listed below to the Engineer prior to beginning crane operations involving critical lifts. A critical lift is defined as any lift that exceeds 75 percent of the manufacturer's crane chart capacity for the radius at which the load will be lifted or requires the use of more than one crane. Changes in personnel or equipment must be reported to the Engineer and all applicable items listed below must be updated and submitted prior to continuing with crane operations.

CRANE SAFETY SUBMITTAL LIST

A. **Competent Person:** Provide the name and qualifications of the "Competent Person" responsible for crane safety and lifting operations. The named competent person will have the responsibility and authority to stop any work activity due to safety concerns.

B. **Riggers:** Provide the qualifications and experience of the persons responsible for rigging operations. Qualifications and experience should include, but not be limited to, weight calculations, center of gravity determinations, selection and inspection of sling and rigging equipment, and safe rigging practices.

C. **Crane Inspections:** Inspection records for all cranes shall be current and readily accessible for review upon request.

D. **Certifications:** **By July 1, 2006**, crane operators performing critical lifts shall be certified by NC CCO (National Commission for the Certification of Crane Operators), or satisfactorily complete the Carolinas AGC's Professional Crane Operator's Proficiency Program. Other approved nationally accredited programs will be considered upon request. All crane operators shall also have a current CDL medical card. Submit a list of anticipated critical lifts and corresponding crane operator(s). Include current certification for the type of crane operated (small hydraulic, large hydraulic, small lattice, large lattice) and medical evaluations for each operator.

GROUT FOR STRUCTURES (9-30-11)

1.0 DESCRIPTION

This special provision addresses grout for use in pile blockouts, grout pockets, shear keys, dowel holes and recesses for structures. This provision does not apply to grout placed in post-tensioning ducts for bridge beams, girders, or decks. Mix and place grout in accordance with the manufacturer's recommendations, the applicable sections of the Standard Specifications and this provision.

2.0 MATERIAL REQUIREMENTS

Use a Department approved pre-packaged, non-shrink, non-metallic grout. Contact the Materials and Tests Unit for a list of approved pre-packaged grouts and consult the manufacturer to determine if the pre-packaged grout selected is suitable for the required application.

When using an approved pre-packaged grout, a grout mix design submittal is not required.

The grout shall be free of soluble chlorides and contain less than one percent soluble sulfate. Supply water in compliance with Article 1024-4 of the Standard Specifications.

Aggregate may be added to the mix only where recommended or permitted by the manufacturer and Engineer. The quantity and gradation of the aggregate shall be in accordance with the manufacturer's recommendations.

Admixtures, if approved by the Department, shall be used in accordance with the manufacturer's recommendations. The manufacture date shall be clearly stamped on each container. Admixtures with an expired shelf life shall not be used.

The Engineer reserves the right to reject material based on unsatisfactory performance.

Initial setting time shall not be less than 10 minutes when tested in accordance with ASTM C266.

Test the expansion and shrinkage of the grout in accordance with ASTM C1090. The grout shall expand no more than 0.2% and shall exhibit no shrinkage. Furnish a Type 4 material certification showing results of tests conducted to determine the properties listed in the Standard Specifications and to assure the material is non-shrink.

Unless required elsewhere in the contract the compressive strength at 3 days shall be at least 5000 psi. Compressive strength in the laboratory shall be determined in accordance with ASTM C109 except the test mix shall contain only water and the dry manufactured material. Compressive strength in the field will be determined by molding and testing 4" x 8" cylinders in accordance with AASHTO T22. Construction loading and traffic loading shall not be allowed until the 3 day compressive strength is achieved.

When tested in accordance with ASTM C666, Procedure A, the durability factor of the grout shall not be less than 80.

3.0 SAMPLING AND PLACEMENT

Place and maintain components in final position until grout placement is complete and accepted. Concrete surfaces to receive grout shall be free of defective concrete, laitance, oil, grease and other foreign matter. Saturate concrete surfaces with clean water and remove excess water prior to placing grout.

Do not place grout if the grout temperature is less than 50°F or more than 90°F or if the air temperature measured at the location of the grouting operation in the shade away from artificial heat is below 45°F.

Provide grout at a rate that permits proper handling, placing and finishing in accordance with the manufacturer's recommendations unless directed otherwise by the Engineer. Use grout free of any lumps and undispersed cement. Agitate grout continuously before placement.

Control grout delivery so the interval between placing batches in the same component does not exceed 20 minutes.

The Engineer will determine the locations to sample grout and the number and type of samples collected for field and laboratory testing. The compressive strength of the grout will be considered the average compressive strength test results of 3 cube or 2 cylinder specimens at 28 days.

4.0 BASIS OF PAYMENT

No separate payment will be made for "Grout for Structures". The cost of the material, equipment, labor, placement, and any incidentals necessary to complete the work shall be considered incidental to the structure item requiring grout.

REMOVAL OF EXISTING STRUCTURE AT STATION 13+41.72 -L- (SPECIAL)

The existing bridge shall be removed in accordance with the Standard Specifications with the following exception.

The existing beams No. 5 & No. 6 of Span 3 shall be removed and salvaged for the Division of Highways as directed by the Engineer. All salvaged material shall be removed carefully without damage. These beams are composite with the deck; therefore, removal should be accomplished in a manner that minimizes damage to shear studs. Non-destructive removal methods for beams No. 5 & No. 6 are required. The remaining portions of the structure shall be removed in accordance with the plans and Standard Specifications.

The Contractor shall not use any of the items, either temporarily or permanently, which have been removed and are to be salvaged. The Contractor shall notify Chuck White, of the Bridge Maintenance Yard at (704) 630-3260, five days prior to removal of the beams so that NCDOT can provide equipment for the salvaged beams to be placed on. The Contractor shall load the beams onto equipment provided by NCDOT. NCDOT maintenance forces will pick up the salvaged material once loaded onto their equipment.

No separate measurement will be made for this work and the entire cost of this work shall be included in the lump sum contract price bid for "Removal of Existing Structure at Station 13+41.72 –L-".

ST-29

B-3159 **Davidson Co.**

CLASSIC CONCRETE BRIDGE RAIL **(SPECIAL)**

1.0 GENERAL

The "Classic Concrete Bridge Rail" shall be in accordance with applicable parts of the Standard Specifications, the details shown on the plans and as outlined in this Special Provision. Plans for the bridge rails are detailed for cast in place concrete and must be placed using conventional forms.

2.0 CONCRETE MIX

Concrete for the bridge rail shall meet the requirements for Class AA Concrete with exception noted below:

The maximum size coarse aggregate used in the concrete mix shall be #78M. The slump shall be within the range of 5" to 8" when tested in accordance with AASHTO T119. A high range water reducer shall be used. The quantity of high range water reducer per pound of cement shall be within the range recommended on the current list of approved admixtures issued by the Materials & Tests Unit.

3.0 CONSTRUCTION

The bridge rails shall be placed to the established shape, line, grade and dimensions shown on the plans.

Joints in the rails shall be constructed at the locations and of the type specified on the plans.

4.0 FINISHING

All exposed surfaces which are not satisfactory to the Engineer as to uniformity of color and texture or because of excessive patching shall be corrected as required by the Engineer. All surfaces of the bridge rails shall be given a Class I Surface Finish in accordance with the Standard Specifications unless directed otherwise by the Engineer.

5.0 MEASUREMENT

The quantity to be paid for under this item shall be the actual number of linear feet of “Classic Concrete Bridge Rail”, complete in place and accepted, measured continuously along the top surface of completed rail from end to end without deductions for spaces between sections.

6.0 PAYMENT

The quantity, measured as described above, will be paid for at the contract unit price per linear foot bid for “Classic Concrete Bridge Rail”, which price and payment shall be full compensation for all materials, admixtures, forms, falsework, curing, surface finish, tools, labor, equipment and incidentals necessary to complete the item.

B-3159 **Davidson Co.**

PATTERNED CONCRETE SIDEWALK (SPECIAL)

1.0 GENERAL

Construct the "1/3 running bond" concrete sidewalk pattern in accordance with the details shown on the contract plans and with Section 420 of the Standard Specifications. The Contractor shall coordinate with Roger Jones, P.E., Public Services Manager for the City of Lexington, at 336-248-3930 for any additional details related to the pattern dimensions and finishing not shown on the plans.

2.0 PAYMENT

Payment for the hand-cut patterned concrete sidewalk will be paid for at the square foot contract price bid for "Patterned Concrete Sidewalk". Prices and payment will be full compensation for the constructing the "1/3 running bond" pattern in the concrete sidewalk, labor, tools, and equipment necessary to complete the item.

ARCHITECTURAL CONCRETE SURFACE TREATMENT (SPECIAL)

1.0 GENERAL

The work covered by this special provision shall consist of constructing a simulated stone masonry textured surface on both faces of precast concrete panels used in sound barrier walls and exposed face of the MSE retaining walls as indicated on the Plans and in this Special Provision. The Contractor shall furnish all materials, labor, equipment, and incidentals necessary for the construction of architectural concrete surface treatment using simulated stone masonry form liners (molds) and a compatible concrete coloring system.

The Contractor is required to use the same source of form liner and color stains for all sound barrier and MSE retaining wall panels. The architectural concrete surface treatment should match the appearance (stone size and shape, stone texture, pattern and relief) of natural stone to resemble an Ashlar Stone pattern with Federal Standard 595 Color # FS 36152 coloration as directed by the Engineer. All texture is to be in addition to the nominal thickness of the wall panels of 4 inches ± ¼ inch. Relief of any texture is not to exceed an average depth of 1 inch. Concrete columns are to remain unstained in their natural concrete color. There shall be an appreciable contrast between the colors of the unstained concrete columns, the unstained top 1'-0" of the top panel and the stained panels. For information purposes only, sources of form liners in the ashlar stone pattern include, but are not limited to:

Scott System, Inc.
10777 E. 45th Avenue
Denver, Colorado 80239
www.scottsystem.com
Pattern: Ashlar Stone # C167C

Architectural Polymers, Inc.
1220 Little Gap Road
Palmerton, PA 18071
www.architecturalpolymers.com/
Pattern: Ashlar Stone # 904

Creative Form Liners, Inc.
3411 Windom Road
Brentwood, Maryland 20722
www.creativeformliners.com/
Patttern: Ashlar Stone # CFL-FF008

The Contractor has the option of supplying an alternative pattern of simulated stone form liners, as long as the patterns selected are approved, in writing, as an equal or approved alternative by the Engineer.

2.0 SUBMITTALS

Shop Drawings – The Contractor shall submit for review and acceptance, plan and elevation views and details showing overall simulated stone pattern, joint locations, form tie locations, and end, edge or other special conditions. The drawings should include typical cross sections of applicable surfaces, joints, corners, stone relief, stone size, pitch/working line, mortar joint and bed depths. If necessary, the Contractor shall revise the shop drawings until the proposed form liner patterns and arrangement have been accepted by the Engineer. Shop drawings should be of sufficient scale to show the detail of all stone and joints patterns. The size of the sheets used for the shop drawings shall be 22" x 34".

The form liner shall be patterned such that long continuous horizontal or vertical lines do not occur on the finished exposed surface. The line pattern shall be random in nature and shall conceal construction joint lines. Special attention should be given to details for wrapping form liners around corners. The top 1'-0" of the top panel shall remain untreated. This portion shall have a smooth, non-textured finish, and remain in its natural concrete color.

Shop drawings shall be reviewed and accepted prior to fabrication of form liners.

Sample Panels – After shop drawings have been reviewed and accepted by the Engineer, the Contractor shall construct three 24" x 24" transportable sample panel(s) at the project site. The materials used in construction of the sample panel(s) shall comply with Section 420 of the Standard Specifications. The sample panel(s) shall be constructed using approved form liners. Any sample panel that is not accepted by the Engineer is to be removed from the project site and a new sample panel produced at no additional expense to the Department.

After the color, texture, and uniformity of the furnished samples are approved, produce a full scale unit meeting the design requirements. This mock-up and the furnished samples establish the standard quality for determining the acceptance of the panels.

Architectural surface treatments and patterns of the finished work shall achieve the same final effect as demonstrated on the accepted sample panel(s). Upon acceptance by the Engineer, the sample panel(s) shall be used as the quality standard for the project. After the acceptance of the completed structure, the Contractor shall dispose of the sample panels as directed by the Engineer.

3.0 MATERIAL REQUIREMENTS

Form Liner – The form liner shall be a high quality, reusable product manufactured of high strength urethane rubber or other approved material which attaches easily to the form work system, and shall not compress more than ¼" when concrete is poured at a rate of 10 vertical feet per hour. The form liners shall be removable without causing deterioration of the surface or underlying concrete.

Form Release Agent – Form release agent shall be a non-staining petroleum distillate free from water, asphaltic, and other insoluble residue, or an equivalent product. Form release agents shall be compatible with the color system applied and any special surface finish.

Form Ties – Form ties shall be set back a minimum of 2" from the finished concrete surface. The ties shall be designed so that all material in the device to a depth of at least 2" back of the concrete face (bottom of simulated mortar groove) can be disengaged and removed without spalling or damaging the concrete. The Contractor shall submit the type of form ties to the Engineer for approval.

Concrete Color System/Stain – Special surface color system shall be performed using approved coloring systems/stains suitable for the purpose intended and applied in a manner consistent with the design intent of the project. The approved sample panel shall be the basis for determining the appropriate color/stain application.

Color stains shall be a special penetrating stain mix as provided by the manufacturer and shall be the equivalent of Federal Standard 595 Color # FS 36152 to achieve a full, natural color in the finished surface. The stain shall create a surface finish that is breathable (allowing water vapor transmission), and that resists deterioration from water, acid, alkali, fungi, sunlight, or weathering. Stain mix shall meet the requirements for mildew resistance of Federal Test Method Standard 144, Method 6271, and requirements for weathering resistance of 1,000 hours accelerated exposure measures by Weatherometer in accordance with ASTM G 26. Color samples must be submitted for approval. Final coloring system and the Contractor's equivalent of Federal Standard 595 Color # FS 36152 is subject to acceptance by the Engineer.

Quality Standards – Manufacturer of simulated stone masonry form liners and custom coloring system shall have at least five years' experience making stone masonry molds and color stains to create formed concrete surfaces to match natural stone shapes, surface textures and colors.

The Contractor shall schedule a pre-installation conference with manufacturer representative and the Engineer to assure understanding of simulated stone masonry form liner use, color application, requirements for construction of sample panel(s), and to

coordinate the work. The Contractor shall be required to disclose their source of simulated stone masonry manufacturer and final coloration contractor at the Preconstruction Conference.

4.0 CONSTRUCTION

Form Liner Preparation – Prior to each concrete pour, the form liners shall be clean and free of build-up. Each liner shall be visually inspected for blemishes and tears. Repairs shall be made in accordance with the manufacturer's recommendations. Repairs shall be accepted by the Engineer before being used. Form liner panels that do not perform as intended or are no longer repairable shall be replaced.

Form Liner Attachment – Form liners shall be securely attached to forms in accordance with the manufacturer's recommendations, with less than a ¼" seam. Blend form liner butt joints into the stone pattern and finish off the final concrete surface. Create no visible vertical or horizontal seams or conspicuous form liner butt joint marks. At locations where the form liners are joined, carefully blend to match the balance of the stone pattern. Form liners shall be installed to withstand anticipated concrete placement pressures without leakage and without causing physical or visual defects. Wall ties shall be coordinated with the form liner system. The Contractor shall have a technical representative from the form liner manufacturer on site for technical supervision during the installation and removal of form liners. Unless directed by the Engineer, installation and removal of form liners shall not be permitted if the technical representative is not present.

Form Release Agent – Form release agent shall be applied in accordance with the manufacturer's recommendations. The material shall be compatible with the form liner material and the concrete coloring system and in accordance with this Special Provision. Form release agent should be worked into all areas, especially pattern recesses.

Patching – All form tie holes and other defects in finished uncolored surface shall be filled or repaired within 48 hours of form removal. Use patching materials and procedures in accordance with the manufacturer's recommendations.

Surface Finish – All surfaces that are to receive coloring agent application shall be free of all laitance, dirt, dust, grease, efflorescence, paint or any other foreign material prior to the application of coloring agent. Cleaning of surfaces shall be accomplished by pressure washing with water set at 3,000 psi to remove laitance. The fan nozzle shall be held perpendicular to the surface at a distance of 1 to 2 feet. Sandblasting will not be permitted.

Final surface shall be free of blemishes, discolorations, surface voids, and other irregularities. All patterns should be continuous without visual disruption.

Reinforced concrete shall be finished in accordance with the Standard Specifications, except that curing of concrete should been done to accommodate the application of coloring and surface finish treatment.

Grout Pattern Joints – Grout pattern joints shall be constructed to simulate the appearance of mortared joints produced in laid up masonry work. Grout pattern joints shall be produced in accordance with the form liner / concrete color system manufacturer.

Color/Stain Application – Finished concrete and patches shall stand in place 30 days after form liners are removed prior to application of coloring/staining agent. Maintain the concrete temperature between 40°F and 85°F during color/stain application and for 48 hours after color/stain application. Consult the manufacturer's recommendations for preparation, application, curing, and storage of coloring agents/stains. The contractor shall provide a Color Application Artist who is trained in the special techniques to achieve realistic surface appearances, if requested by the Engineer. Treated surfaces located adjacent to exposed soil or pavement shall be temporarily covered to prevent dirt or soil splatter from rain.

Following the completion of all work, repairs of any damage made by other construction operations shall be made to the form lined and colored surfaces as directed by the Engineer.

Experience and Qualifications – The Contractor shall have a minimum of three consecutive years' experience in architectural concrete surface treatment construction on similar types of projects. The Contractor shall furnish, to the Engineer, five (5) references that were responsible for supervision of similar projects and will testify to the successful completion of these projects. Include name, address, telephone number, and specific type of application.

5.0 BASIS OF PAYMENT

This work will not be measured for payment, but shall be included in the contract unit price bid per square foot for "Sound Barrier Wall" or "MSE Retaining Wall" as shown on plans. Payment will include the furnishing and use of all form liners, coloring stains, the construction, finishing, and removal of all equipment, materials, labor, and incidentals necessary to complete the work in conformance with the Contract Documents.

PROJECT SPECIAL PROVISION

(10-18-95) (Rev. 10-15-13) Z-1

PERMITS

The Contractor's attention is directed to the following permits, which have been issued to the Department of Transportation by the authority granting the permit.

PERMIT	AUTHORITY GRANTING THE PERMIT
Dredge and Fill and/or Work in Navigable Waters (404)	U. S. Army Corps of Engineers
Water Quality (401)	Division of Environmental Management, DENR State of North Carolina

The Contractor shall comply with all applicable permit conditions during construction of this project. Those conditions marked by ***** are the responsibility of the Department and the Contractor has no responsibility in accomplishing those conditions.

Agents of the permitting authority will periodically inspect the project for adherence to the permits.

The Contractor's attention is also directed to Articles 107-10 and 107-13 of the *2012 Standard Specifications* and the following:

Should the Contractor propose to utilize construction methods (such as temporary structures or fill in waters and/or wetlands for haul roads, work platforms, cofferdams, etc.) not specifically identified in the permit (individual, general, or nationwide) authorizing the project it shall be the Contractor's responsibility to coordinate with the Engineer to determine what, if any, additional permit action is required. The Contractor shall also be responsible for initiating the request for the authorization of such construction method by the permitting agency. The request shall be submitted through the Engineer. The Contractor shall not utilize the construction method until it is approved by the permitting agency. The request normally takes approximately 60 days to process; however, no extensions of time or additional compensation will be granted for delays resulting from the Contractor's request for approval of construction methods not specifically identified in the permit.

Where construction moratoriums are contained in a permit condition which restricts the Contractor's activities to certain times of the year, those moratoriums will apply only to the portions of the work taking place in the waters or wetlands provided that activities outside those areas is done in such a manner as to not affect the waters or wetlands.

U.S. ARMY CORPS OF ENGINEERS
WILMINGTON DISTRICT

Action Id. **SAW-2009-02081** County: **Davidson** U.S.G.S. Quad: **NC-LEXINGTON WEST**

GENERAL PERMIT (REGIONAL AND NATIONWIDE) VERIFICATION

Permittee: **NC DOT/ Project Development and Environmental Analysis**
Amy James
Address: **1598 Mail Service Center**

Raleigh, NC, 27699
Telephone Number:

Size (acres)
Nearest Waterway **Michael Branch**
USGS HUC **3040103**

Nearest Town
River Basin **Lower Yadkin. North Carolina.**
Coordinates Latitude: **35.8358058430426**
Longitude: **-80.253814668533**

Location description: Bridge #27 on NC 8 adjacent to Michael Branch, in Lexington, Davidson County, NC. TIP B-3159

Description of projects area and activity: **replacement of existing overpass bridge** culvert replacement associated with bridge replacement at existing location including 18 linear feet of temporary stream channel associated with dewatering for culvert replacement.

Applicable Law: ☒ Section 404 (Clean Water Act, 33 USC 1344)
☐ Section 10 (Rivers and Harbors Act, 33 USC 403)

Authorization: Regional General Permit Number or Nationwide Permit Number: **NWP 3 Maintenance.**
SEE ATTACHED RGP or NWP GENERAL, REGIONAL AND SPECIAL CONDITIONS

Your work is authorized by the above referenced permit provided it is accomplished in strict accordance with the attached conditions and your submitted application and attached information dated 09/02/2014. Any violation of the attached conditions or deviation from your submitted plans may subject the permittee to a stop work order, a restoration order, a Class I administrative penalty, and/or appropriate legal action.

This verification will remain valid until the expiration date identified below unless the nationwide authorization is modified, suspended or revoked. If, prior to the expiration date identified below, the nationwide permit authorization is reissued and/or modified, this verification will remain valid until the expiration date identified below, provided it complies with all requirements of the modified nationwide permit. If the nationwide permit authorization expires or is suspended, revoked, or is modified, such that the activity would no longer comply with the terms and conditions of the nationwide permit, activities which have commenced (i.e., are under construction) or are under contract to commence in reliance upon the nationwide permit, will remain authorized provided the activity is completed within twelve months of the date of the nationwide permit's expiration, modification or revocation, unless discretionary authority has been exercised on a case-by-case basis to modify, suspend or revoke the authorization.

Activities subject to Section 404 (as indicated above) may also require an individual Section 401 Water Quality Certification. You should contact the NC Division of Water Quality (telephone 919-807-6300) to determine Section 401 requirements.

For activities occurring within the twenty coastal counties subject to regulation under the Coastal Area Management Act (CAMA), prior to beginning work you must contact the N.C. Division of Coastal Management in Morehead City, NC, at (252) 808-2808.

This Department of the Army verification does not relieve the permittee of the responsibility to obtain any other required Federal, State or local approvals/permits.

If there are any questions regarding this verification, any of the conditions of the Permit, or the Corps of Engineers regulatory program, please contact **John Thomas at 919-554-4884 x25 or John.T.Thomas.JR@usace.army.mil**.

Corps Regulatory Official: _____ Date: **09/02/2014**
Expiration Date of Verification: **03/18/2017**

SAW-2009-02081

Determination of Jurisdiction:

A. ☐ Based on preliminary information, there appear to be waters of the US including wetlands within the above described project area. This preliminary determination is not an appealable action under the Regulatory Program Administrative Appeal Process (Reference 33 CFR Part 331).

B. ☐ There are Navigable Waters of the United States within the above described project area subject to the permit requirements of Section 10 of the Rivers and Harbors Act and Section 404 of the Clean Water Act. Unless there is a change in the law or our published regulations, this determination may be relied upon for a period not to exceed five years from the date of this notification.

C. ☒ There are waters of the US and/or wetlands within the above described project area subject to the permit requirements of Section 404 of the Clean Water Act (CWA)(33 USC § 1344). Unless there is a change in the law or our published regulations, this determination may be relied upon for a period not to exceed five years from the date of this notification.

D. ☐ The jurisdictional areas within the above described project area have been identified under a previous action. Please reference jurisdictional determination issued . Action ID: **SAW-** .

Basis For Determination: **Michael Branch is a tributary of the Yadkin River that flows south to the Pee Dee River in South Carolina.**

Remarks:

E. Attention USDA Program Participants

This delineation/determination has been conducted to identify the limits of Corps' Clean Water Act jurisdiction for the particular site identified in this request. The delineation/determination may not be valid for the wetland conservation provisions of the Food Security Act of 1985. If you or your tenant are USDA Program participants, or anticipate participation in USDA programs, you should request a certified wetland determination from the local office of the Natural Resources Conservation Service, prior to starting work.

F. Appeals Information (This information applies only to approved jurisdictional determinations as indicated in B and C above).

This correspondence constitutes an approved jurisdictional determination for the above described site. If you object to this determination, you may request an administrative appeal under Corps regulations at 33 CFR Part 331. Enclosed you will find a Notification of Appeal Process (NAP) fact sheet and request for appeal (RFA) form. If you request to appeal this determination you must submit a completed RFA form to the following address:

US Army Corps of Engineers
South Atlantic Division
Attn: Jason Steele, Review Officer
60 Forsyth Street SW, Room 10M15
Atlanta, Georgia 30303-8801
Phone: (404) 562-5137

In order for an RFA to be accepted by the Corps, the Corps must determine that it is complete, that it meets the criteria for appeal under 33 CFR part 331.5, and that it has been received by the Division Office within 60 days of the date of the NAP. Should you decide to submit an RFA form, it must be received at the above address by 11/ 02/ 2014 .
It is not necessary to submit an RFA form to the Division Office if you do not object to the determination in this correspondence.

Corps Regulatory Official: _____
John Thomas

Date of JD: **09/02/2014**
Expiration Date of JD: 3/ 18/ 2017

Action ID Number: SAW-2009-02081 **County:** Davidson

Permittee: NC DOT/ Project Development and Environmental Analysis
Amy James

Project Name: NCDOT NC 8 Br 27 TIP B-3159

Date Verification Issued: 09/02/2014

Project Manager: John Thomas

Upon completion of the activity authorized by this permit and any mitigation required by the permit, sign this certification and return it to the following address:

US ARMY CORPS OF ENGINEERS
WILMINGTON DISTRICT
Attn: John Thomas
Raleigh Regulatory Field Office
3331 Heritage Trade Drive
Suite 105
Wake Forest, NC 27587

Please note that your permitted activity is subject to a compliance inspection by a U. S. Army Corps of Engineers representative. Failure to comply with any terms or conditions of this authorization may result in the Corps suspending, modifying or revoking the authorization and/or issuing a Class I administrative penalty, or initiating other appropriate legal action.

I hereby certify that the work authorized by the above referenced permit has been completed in accordance with the terms and condition of the said permit, and required mitigation was completed in accordance with the permit conditions.

_____ _____

Signature of Permittee Date

NOTIFICATION OF ADMINISTRATIVE APPEAL OPTIONS AND PROCESS AND REQUEST FOR APPEAL

Applicant: **NC DOT/ Project Development and Environmental Analysis** **Amy James**	File Number: **SAW-2009-02081**	Date: **09/02/2014**

Attached is:	See Section below
☐ INITIAL PROFFERED PERMIT (Standard Permit or Letter of permission)	A
☐ PROFFERED PERMIT (Standard Permit or Letter of permission)	B
☐ PERMIT DENIAL	C
☐ APPROVED JURISDICTIONAL DETERMINATION	D
☒ PRELIMINARY JURISDICTIONAL DETERMINATION	E

SECTION I - The following identifies your rights and options regarding an administrative appeal of the above decision. Additional information may be found at or http://www.usace.army.mil/Missions/CivilWorks/RegulatoryProgramandPermits.aspx or the Corps regulations at 33 CFR Part 331.

A: INITIAL PROFFERED PERMIT: You may accept or object to the permit.

- ACCEPT: If you received a Standard Permit, you may sign the permit document and return it to the district engineer for final authorization. If you received a Letter of Permission (LOP), you may accept the LOP and your work is authorized. Your signature on the Standard Permit or acceptance of the LOP means that you accept the permit in its entirety, and waive all rights to appeal the permit, including its terms and conditions, and approved jurisdictional determinations associated with the permit.
- OBJECT: If you object to the permit (Standard or LOP) because of certain terms and conditions therein, you may request that the permit be modified accordingly. You must complete Section II of this form and return the form to the district engineer. Your objections must be received by the district engineer within 60 days of the date of this notice, or you will forfeit your right to appeal the permit in the future. Upon receipt of your letter, the district engineer will evaluate your objections and may: (a) modify the permit to address all of your concerns, (b) modify the permit to address some of your objections, or (c) not modify the permit having determined that the permit should be issued as previously written. After evaluating your objections, the district engineer will send you a proffered permit for your reconsideration, as indicated in Section B below.

B: PROFFERED PERMIT: You may accept or appeal the permit

- ACCEPT: If you received a Standard Permit, you may sign the permit document and return it to the district engineer for final authorization. If you received a Letter of Permission (LOP), you may accept the LOP and your work is authorized. Your signature on the Standard Permit or acceptance of the LOP means that you accept the permit in its entirety, and waive all rights to appeal the permit, including its terms and conditions, and approved jurisdictional determinations associated with the permit.
- APPEAL: If you choose to decline the proffered permit (Standard or LOP) because of certain terms and conditions therein, you may appeal the declined permit under the Corps of Engineers Administrative Appeal Process by completing Section II of this form and sending the form to the division engineer. This form must be received by the division engineer within 60 days of the date of this notice.

C: PERMIT DENIAL: You may appeal the denial of a permit under the Corps of Engineers Administrative Appeal Process by completing Section II of this form and sending the form to the division engineer. This form must be received by the division engineer within 60 days of the date of this notice.

D: APPROVED JURISDICTIONAL DETERMINATION: You may accept or appeal the approved JD or provide new information.

- ACCEPT: You do not need to notify the Corps to accept an approved JD. Failure to notify the Corps within 60 days of the date of this notice, means that you accept the approved JD in its entirety, and waive all rights to appeal the approved JD.
- APPEAL: If you disagree with the approved JD, you may appeal the approved JD under the Corps of Engineers Administrative Appeal Process by completing Section II of this form and sending the form to the district engineer. This form must be received by the division engineer within 60 days of the date of this notice.

E: PRELIMINARY JURISDICTIONAL DETERMINATION: You do not need to respond to the Corps regarding the preliminary JD. The Preliminary JD is not appealable. If you wish, you may request an approved JD (which may be appealed), by contacting the Corps district for further instruction. Also you may provide new information for further consideration by the Corps to reevaluate the JD.

SECTION II - REQUEST FOR APPEAL or OBJECTIONS TO AN INITIAL PROFFERED PERMIT

REASONS FOR APPEAL OR OBJECTIONS: (Describe your reasons for appealing the decision or your objections to an initial proffered permit in clear concise statements. You may attach additional information to this form to clarify where your reasons or objections are addressed in the administrative record.)

ADDITIONAL INFORMATION: The appeal is limited to a review of the administrative record, the Corps memorandum for the record of the appeal conference or meeting, and any supplemental information that the review officer has determined is needed to clarify the administrative record. Neither the appellant nor the Corps may add new information or analyses to the record. However, you may provide additional information to clarify the location of information that is already in the administrative record.

POINT OF CONTACT FOR QUESTIONS OR INFORMATION:

If you have questions regarding this decision and/or the appeal process you may contact: **District Engineer, Wilmington Regulatory Division, Attn: John Thomas**	If you only have questions regarding the appeal process you may also contact: Mr. Jason Steele, Administrative Appeal Review Officer CESAD-PDO U.S. Army Corps of Engineers, South Atlantic Division 60 Forsyth Street, Room 10M15 Atlanta, Georgia 30303-8801 Phone: (404) 562-5137

RIGHT OF ENTRY: Your signature below grants the right of entry to Corps of Engineers personnel, and any government consultants, to conduct investigations of the project site during the course of the appeal process. You will be provided a 15 day notice of any site investigation, and will have the opportunity to participate in all site investigations.

_____ Signature of appellant or agent.	Date:	Telephone number:

For appeals on Initial Proffered Permits send this form to:

District Engineer, Wilmington Regulatory Division, Attn: John Thomas, 69 Darlington Avenue, Wilmington, North Carolina 28403

For Permit denials, Proffered Permits and approved Jurisdictional Determinations send this form to:

Division Engineer, Commander, U.S. Army Engineer Division, South Atlantic, Attn: Mr. Jason Steele, Administrative Appeal Officer, CESAD-PDO, 60 Forsyth Street, Room 10M15, Atlanta, Georgia 30303-8801
Phone: (404) 562-5137

NATIONWIDE PERMIT 3
DEPARTMENT OF THE ARMY
CORPS OF ENGINEERS
FINAL NOTICE OF ISSUANCE AND MODIFICATION OF NATIONWIDE PERMITS
FEDERAL REGISTER
AUTHORIZED MARCH 19, 2012

Maintenance. (a) The repair, rehabilitation, or replacement of any previously authorized, currently serviceable structure, or fill, or of any currently serviceable structure or fill authorized by 33 CFR 330.3, provided that the structure or fill is not to be put to uses differing from those uses specified or contemplated for it in the original permit or the most recently authorized modification. Minor deviations in the structure's configuration or filled area, including those due to changes in materials, construction techniques, requirements of other regulatory agencies, or current construction codes or safety standards that are necessary to make the repair, rehabilitation, or replacement are authorized. Any stream channel modification is limited to the minimum necessary for the repair, rehabilitation, or replacement of the structure or fill; such modifications, including the removal of material from the stream channel, must be immediately adjacent to the project or within the boundaries of the structure or fill. This NWP also authorizes the repair, rehabilitation, or replacement of those structures or fills destroyed or damaged by storms, floods, fire or other discrete events, provided the repair, rehabilitation, or replacement is commenced, or is under contract to commence, within two years of the date of their destruction or damage. In cases of catastrophic events, such as hurricanes or tornadoes, this two-year limit may be waived by the district engineer, provided the permittee can demonstrate funding, contract, or other similar delays.

(b) This NWP also authorizes the removal of accumulated sediments and debris in the vicinity of existing structures (e.g., bridges, culverted road crossings, water intake structures, etc.) and/or the placement of new or additional riprap to protect the structure. The removal of sediment is limited to the minimum necessary to restore the waterway in the vicinity of the structure to the approximate dimensions that existed when the structure was built, but cannot extend farther than 200 feet in any direction from the structure. This 200 foot limit does not apply to maintenance dredging to remove accumulated sediments blocking or restricting outfall and intake structures or to maintenance dredging to remove accumulated sediments from canals associated with outfall and intake structures. All dredged or excavated materials must be deposited and retained in an area that has no waters of the United States unless otherwise specifically approved by the district engineer under separate authorization. The placement of new or additional riprap must be the minimum necessary to protect the structure or to ensure the safety of the structure. Any bank stabilization measures not directly associated with the structure will require a separate authorization from the district engineer.

(c) This NWP also authorizes temporary structures, fills, and work necessary to conduct the maintenance activity. Appropriate measures must be taken to maintain normal downstream flows and minimize flooding to the maximum extent practicable, when temporary structures, work, and discharges, including cofferdams, are necessary for construction activities, access fills, or dewatering of construction sites. Temporary fills must consist of materials, and be placed in a manner, that will not be eroded by expected high flows. Temporary fills must be removed in

their entirety and the affected areas returned to pre-construction elevations. The areas affected by temporary fills must be revegetated, as appropriate.

(d) This NWP does not authorize maintenance dredging for the primary purpose of navigation. This NWP does not authorize beach restoration. This NWP does not authorize new stream channelization or stream relocation projects.

* Notification: For activities authorized by paragraph (b) of this NWP, the permittee must submit a pre-construction notification to the district engineer prior to commencing the activity (see general condition 31). The pre-construction notification must include information regarding the original design capacities and configurations of the outfalls, intakes, small impoundments, and canals. (Sections 10 and 404)

Note: This NWP authorizes the repair, rehabilitation, or replacement of any previously authorized structure or fill that does not qualify for the Clean Water Act Section 404(f) exemption for maintenance.

NATIONWIDE PERMIT CONDITIONS

The following General Conditions must be followed in order for any authorization by a NWP to be valid:

1. Navigation. (a) No activity may cause more than a minimal adverse effect on navigation.

(b) Any safety lights and signals prescribed by the U.S. Coast Guard, through regulations or otherwise, must be installed and maintained at the permittee's expense on authorized facilities in navigable waters of the United States.

(c) The permittee understands and agrees that, if future operations by the United States require the removal, relocation, or other alteration, of the structure or work herein authorized, or if, in the opinion of the Secretary of the Army or his authorized representative, said structure or work shall cause unreasonable obstruction to the free navigation of the navigable waters, the permittee will be required, upon due notice from the Corps of Engineers, to remove, relocate, or alter the structural work or obstructions caused thereby, without expense to the United States. No claim shall be made against the United States on account of any such removal or alteration.

2. Aquatic Life Movements. No activity may substantially disrupt the necessary life cycle movements of those species of aquatic life indigenous to the waterbody, including those species that normally migrate through the area, unless the activity's primary purpose is to impound water. All permanent and temporary crossings of waterbodies shall be suitably culverted, bridged, or otherwise designed and constructed to maintain low flows to sustain the movement of those aquatic species.

3. Spawning Areas. Activities in spawning areas during spawning seasons must be avoided to the maximum extent practicable. Activities that result in the physical destruction (e.g., through excavation, fill, or downstream smothering by substantial turbidity) of an important spawning area are not authorized.

4. Migratory Bird Breeding Areas. Activities in waters of the United States that serve as breeding areas for migratory birds must be avoided to the maximum extent practicable.

5. Shellfish Beds. No activity may occur in areas of concentrated shellfish populations, unless the activity is directly related to a shellfish harvesting activity authorized by NWPs 4 and 48, or is a shellfish seeding or habitat restoration activity authorized by NWP 27.

6. Suitable Material. No activity may use unsuitable material (e.g., trash, debris, car bodies, asphalt, etc.). Material used for construction or discharged must be free from toxic pollutants in toxic amounts (see Section 307 of the Clean Water Act).

7. Water Supply Intakes. No activity may occur in the proximity of a public water supply intake, except where the activity is for the repair or improvement of public water supply intake structures or adjacent bank stabilization.

8. Adverse Effects From Impoundments. If the activity creates an impoundment of water, adverse effects to the aquatic system due to accelerating the passage of water, and/or restricting its flow must be minimized to the maximum extent practicable.

9. Management of Water Flows. To the maximum extent practicable, the pre-construction course, condition, capacity, and location of open waters must be maintained for each activity, including stream channelization and storm water management activities, except as provided below. The activity must be constructed to withstand expected high flows. The activity must not restrict or impede the passage of normal or high flows, unless the primary purpose of the activity is to impound water or manage high flows. The activity may alter the pre-construction course, condition, capacity, and location of open waters if it benefits the aquatic environment (e.g., stream restoration or relocation activities).

10. Fills Within 100-Year Floodplains. The activity must comply with applicable FEMA-approved state or local floodplain management requirements.

11. Equipment. Heavy equipment working in wetlands or mudflats must be placed on mats, or other measures must be taken to minimize soil disturbance.

12. Soil Erosion and Sediment Controls. Appropriate soil erosion and sediment controls must be used and maintained in effective operating condition during construction, and all exposed soil and other fills, as well as any work below the ordinary high water mark or high tide line, must be permanently stabilized at the earliest practicable date. Permittees are encouraged to perform work within waters of the United States during periods of low-flow or no-flow.

13. Removal of Temporary Fills. Temporary fills must be removed in their entirety and the affected areas returned to pre-construction elevations. The affected areas must be revegetated, as appropriate.

14. Proper Maintenance. Any authorized structure or fill shall be properly maintained, including maintenance to ensure public safety and compliance with applicable NWP general conditions, as well as any activity-specific conditions added by the district engineer to an NWP authorization.

15. Single and Complete Project. The activity must be a single and complete project. The same NWP cannot be used more than once for the same single and complete project.

16. Wild and Scenic Rivers. No activity may occur in a component of the National Wild and Scenic River System, or in a river officially designated by Congress as a “study river” for possible inclusion in the system while the river is in an official study status, unless the appropriate Federal agency with direct management responsibility for such river, has determined in writing that the proposed activity will not adversely affect the Wild and Scenic River designation or study status. Information on Wild and Scenic Rivers may be obtained from the appropriate Federal land management agency responsible for the designated Wild and Scenic River or study river (e.g., National Park Service, U.S. Forest Service, Bureau of Land Management, U.S. Fish and Wildlife Service).

17. Tribal Rights. No activity or its operation may impair reserved tribal rights, including, but not limited to, reserved water rights and treaty fishing and hunting rights.

18. Endangered Species. (a) No activity is authorized under any NWP which is likely to directly or indirectly jeopardize the continued existence of a threatened or endangered species or a species proposed for such designation, as identified under the Federal Endangered Species Act (ESA), or which will directly or indirectly destroy or adversely modify the critical habitat of such species. No activity is authorized under any NWP which “may affect” a listed species or critical habitat, unless Section 7 consultation addressing the effects of the proposed activity has been completed.

(b) Federal agencies should follow their own procedures for complying with the requirements of the ESA. Federal permittees must provide the district engineer with the appropriate documentation to demonstrate compliance with those requirements. The district engineer will review the documentation and determine whether it is sufficient to address ESA compliance for the NWP activity, or whether additional ESA consultation is necessary.

* (c) Non-federal permittees must submit a pre-construction notification to the district engineer if any listed species or designated critical habitat might be affected or is in the vicinity of the project, or if the project is located in designated critical habitat, and shall not begin work on the activity until notified by the district engineer that the requirements of the ESA have been satisfied and that the activity is authorized. For activities that might affect Federally-listed endangered or threatened species or designated critical habitat, the pre-construction notification must include the name(s) of the endangered or threatened species that might be affected by the proposed work or that utilize the designated critical habitat that might be affected by the proposed work. The district engineer will determine whether the proposed activity “may affect” or will have “no effect” to listed species and designated critical habitat and will notify the non-Federal applicant of the Corps’ determination within 45 days of receipt of a complete pre-construction notification. In cases where the non-Federal applicant has identified listed species or critical habitat that might be affected or is in the vicinity of the project, and has so notified the Corps, the applicant shall not begin work until the Corps has provided notification the proposed activities will have “no effect” on listed species or critical habitat, or until Section 7 consultation has been completed. If the non-Federal applicant has not heard back from the Corps within 45 days, the applicant must still wait for notification from the Corps.

(d) As a result of formal or informal consultation with the FWS or NMFS the district engineer may add species-specific regional endangered species conditions to the NWPs.

(e) Authorization of an activity by a NWP does not authorize the “take” of a threatened or endangered species as defined under the ESA. In the absence of separate authorization (e.g., an ESA Section 10 Permit, a Biological Opinion with “incidental take” provisions, etc.) from the U.S. FWS or the NMFS, The Endangered Species Act prohibits any person subject to the jurisdiction of the United States to take a listed species, where "take" means to harass, harm, pursue, hunt, shoot, wound, kill, trap, capture, or collect, or to attempt to engage in any such conduct. The word “harm” in the definition of “take" means an act which actually kills or injures wildlife. Such an act may include significant habitat modification or degradation where it actually kills or injures wildlife by significantly impairing essential behavioral patterns, including breeding, feeding or sheltering.

(f) Information on the location of threatened and endangered species and their critical habitat can be obtained directly from the offices of the U.S. FWS and NMFS or their world wide web pages at http://www.fws.gov/ or http://www.fws.gov/ipac and http://www.noaa.gov/fisheries.html respectively.

19. Migratory Birds and Bald and Golden Eagles. The permittee is responsible for obtaining any "take" permits required under the U.S. Fish and Wildlife Service's regulations governing compliance with the Migratory Bird Treaty Act or the Bald and Golden Eagle Protection Act. The permittee should contact the appropriate local office of the U.S. Fish and Wildlife Service to determine if such "take" permits are required for a particular activity.

20. Historic Properties. (a) In cases where the district engineer determines that the activity may affect properties listed, or eligible for listing, in the National Register of Historic Places, the activity is not authorized, until the requirements of Section 106 of the National Historic Preservation Act (NHPA) have been satisfied.

(b) Federal permittees should follow their own procedures for complying with the requirements of Section 106 of the National Historic Preservation Act. Federal permittees must provide the district engineer with the appropriate documentation to demonstrate compliance with those requirements. The district engineer will review the documentation and determine whether it is sufficient to address section 106 compliance for the NWP activity, or whether additional section 106 consultation is necessary.

* (c) Non-federal permittees must submit a pre-construction notification to the district engineer if the authorized activity may have the potential to cause effects to any historic properties listed on, determined to be eligible for listing on, or potentially eligible for listing on the National Register of Historic Places, including previously unidentified properties. For such activities, the pre-construction notification must state which historic properties may be affected by the proposed work or include a vicinity map indicating the location of the historic properties or the potential for the presence of historic properties. Assistance regarding information on the location of or potential for the presence of historic resources can be sought from the State Historic Preservation Officer or Tribal Historic Preservation Officer, as appropriate, and the National Register of Historic Places (see 33 CFR 330.4(g)). When reviewing pre-construction notifications, district engineers will comply with the current procedures for addressing the requirements of Section 106 of the National Historic Preservation Act. The district engineer shall make a reasonable and good faith effort to carry out appropriate identification efforts, which may include background research, consultation, oral history interviews, sample field investigation, and field survey. Based on the information submitted and these efforts, the district engineer shall determine whether the proposed activity has the potential to cause an effect on the historic properties. Where the non-Federal applicant has identified historic properties on which the activity may have the potential to cause effects and so notified the Corps, the non-Federal applicant shall not begin the activity until notified by the district engineer either that the activity has no potential to cause effects or that consultation under Section 106 of the NHPA has been completed.

(d) The district engineer will notify the prospective permittee within 45 days of receipt of a complete pre-construction notification whether NHPA Section 106 consultation is required. Section 106 consultation is not required when the Corps determines that the activity does not have the potential to cause effects on historic properties (see 36 CFR §800.3(a)). If NHPA

section 106 consultation is required and will occur, the district engineer will notify the non-Federal applicant that he or she cannot begin work until Section 106 consultation is completed. If the non-Federal applicant has not heard back from the Corps within 45 days, the applicant must still wait for notification from the Corps.

(e) Prospective permittees should be aware that section 110k of the NHPA (16 U.S.C. 470h-2(k)) prevents the Corps from granting a permit or other assistance to an applicant who, with intent to avoid the requirements of Section 106 of the NHPA, has intentionally significantly adversely affected a historic property to which the permit would relate, or having legal power to prevent it, allowed such significant adverse effect to occur, unless the Corps, after consultation with the Advisory Council on Historic Preservation (ACHP), determines that circumstances justify granting such assistance despite the adverse effect created or permitted by the applicant. If circumstances justify granting the assistance, the Corps is required to notify the ACHP and provide documentation specifying the circumstances, the degree of damage to the integrity of any historic properties affected, and proposed mitigation. This documentation must include any views obtained from the applicant, SHPO/THPO, appropriate Indian tribes if the undertaking occurs on or affects historic properties on tribal lands or affects properties of interest to those tribes, and other parties known to have a legitimate interest in the impacts to the permitted activity on historic properties.

21. Discovery of Previously Unknown Remains and Artifacts. If you discover any previously unknown historic, cultural or archeological remains and artifacts while accomplishing the activity authorized by this permit, you must immediately notify the district engineer of what you have found, and to the maximum extent practicable, avoid construction activities that may affect the remains and artifacts until the required coordination has been completed. The district engineer will initiate the Federal, Tribal and state coordination required to determine if the items or remains warrant a recovery effort or if the site is eligible for listing in the National Register of Historic Places.

22. Designated Critical Resource Waters. Critical resource waters include, NOAA-managed marine sanctuaries and marine monuments, and National Estuarine Research Reserves. The district engineer may designate, after notice and opportunity for public comment, additional waters officially designated by a state as having particular environmental or ecological significance, such as outstanding national resource waters or state natural heritage sites. The district engineer may also designate additional critical resource waters after notice and opportunity for public comment.

(a) Discharges of dredged or fill material into waters of the United States are not authorized by NWPs 7, 12, 14, 16, 17, 21, 29, 31, 35, 39, 40, 42, 43, 44, 49, 50, 51, and 52 for any activity within, or directly affecting, critical resource waters, including wetlands adjacent to such waters.

(b) For NWPs 3, 8, 10, 13, 15, 18, 19, 22, 23, 25, 27, 28, 30, 33, 34, 36, 37, and 38, notification is required in accordance with general condition 31, for any activity proposed in the designated critical resource waters including wetlands adjacent to those waters. The district engineer may authorize activities under these NWPs only after it is determined that the impacts to the critical resource waters will be no more than minimal.

23. Mitigation. The district engineer will consider the following factors when determining appropriate and practicable mitigation necessary to ensure that adverse effects on the aquatic environment are minimal:

(a) The activity must be designed and constructed to avoid and minimize adverse effects, both temporary and permanent, to waters of the United States to the maximum extent practicable at the project site (i.e., on site).

(b) Mitigation in all its forms (avoiding, minimizing, rectifying, reducing, or compensating for resource losses) will be required to the extent necessary to ensure that the adverse effects to the aquatic environment are minimal.

(c) Compensatory mitigation at a minimum one-for-one ratio will be required for all wetland losses that exceed 1/10-acre and require pre-construction notification, unless the district engineer determines in writing that either some other form of mitigation would be more environmentally appropriate or the adverse effects of the proposed activity are minimal, and provides a project-specific waiver of this requirement. For wetland losses of 1/10-acre or less that require pre-construction notification, the district engineer may determine on a case-by-case basis that compensatory mitigation is required to ensure that the activity results in minimal adverse effects on the aquatic environment. Compensatory mitigation projects provided to offset losses of aquatic resources must comply with the applicable provisions of 33 CFR part 332.

(1) The prospective permittee is responsible for proposing an appropriate compensatory mitigation option if compensatory mitigation is necessary to ensure that the activity results in minimal adverse effects on the aquatic environment.

(2) Since the likelihood of success is greater and the impacts to potentially valuable uplands are reduced, wetland restoration should be the first compensatory mitigation option considered.

(3) If permittee-responsible mitigation is the proposed option, the prospective permittee is responsible for submitting a mitigation plan. A conceptual or detailed mitigation plan may be used by the district engineer to make the decision on the NWP verification request, but a final mitigation plan that addresses the applicable requirements of 33 CFR 332.4(c)(2) – (14) must be approved by the district engineer before the permittee begins work in waters of the United States, unless the district engineer determines that prior approval of the final mitigation plan is not practicable or not necessary to ensure timely completion of the required compensatory mitigation (see 33 CFR 332.3(k)(3)).

(4) If mitigation bank or in-lieu fee program credits are the proposed option, the mitigation plan only needs to address the baseline conditions at the impact site and the number of credits to be provided.

(5) Compensatory mitigation requirements (e.g., resource type and amount to be provided as compensatory mitigation, site protection, ecological performance standards, monitoring requirements) may be addressed through conditions added to the NWP authorization, instead of components of a compensatory mitigation plan.

(d) For losses of streams or other open waters that require pre-construction notification, the district engineer may require compensatory mitigation, such as stream rehabilitation, enhancement, or preservation, to ensure that the activity results in minimal adverse effects on the aquatic environment.

(e) Compensatory mitigation will not be used to increase the acreage losses allowed by the acreage limits of the NWPs. For example, if an NWP has an acreage limit of 1/2-acre, it cannot be used to authorize any project resulting in the loss of greater than 1/2-acre of waters of

the United States, even if compensatory mitigation is provided that replaces or restores some of the lost waters. However, compensatory mitigation can and should be used, as necessary, to ensure that a project already meeting the established acreage limits also satisfies the minimal impact requirement associated with the NWPs.

(f) Compensatory mitigation plans for projects in or near streams or other open waters will normally include a requirement for the restoration or establishment, maintenance, and legal protection (e.g., conservation easements) of riparian areas next to open waters. In some cases, riparian areas may be the only compensatory mitigation required. Riparian areas should consist of native species. The width of the required riparian area will address documented water quality or aquatic habitat loss concerns. Normally, the riparian area will be 25 to 50 feet wide on each side of the stream, but the district engineer may require slightly wider riparian areas to address documented water quality or habitat loss concerns. If it is not possible to establish a riparian area on both sides of a stream, or if the waterbody is a lake or coastal waters, then restoring or establishing a riparian area along a single bank or shoreline may be sufficient. Where both wetlands and open waters exist on the project site, the district engineer will determine the appropriate compensatory mitigation (e.g., riparian areas and/or wetlands compensation) based on what is best for the aquatic environment on a watershed basis. In cases where riparian areas are determined to be the most appropriate form of compensatory mitigation, the district engineer may waive or reduce the requirement to provide wetland compensatory mitigation for wetland losses.

(g) Permittees may propose the use of mitigation banks, in-lieu fee programs, or separate permittee-responsible mitigation. For activities resulting in the loss of marine or estuarine resources, permittee-responsible compensatory mitigation may be environmentally preferable if there are no mitigation banks or in-lieu fee programs in the area that have marine or estuarine credits available for sale or transfer to the permittee. For permittee-responsible mitigation, the special conditions of the NWP verification must clearly indicate the party or parties responsible for the implementation and performance of the compensatory mitigation project, and, if required, its long-term management.

(h) Where certain functions and services of waters of the United States are permanently adversely affected, such as the conversion of a forested or scrub-shrub wetland to a herbaceous wetland in a permanently maintained utility line right-of-way, mitigation may be required to reduce the adverse effects of the project to the minimal level.

24. Safety of Impoundment Structures. To ensure that all impoundment structures are safely designed, the district engineer may require non-Federal applicants to demonstrate that the structures comply with established state dam safety criteria or have been designed by qualified persons. The district engineer may also require documentation that the design has been independently reviewed by similarly qualified persons, and appropriate modifications made to ensure safety.

25. Water Quality. Where States and authorized Tribes, or EPA where applicable, have not previously certified compliance of an NWP with CWA Section 401, individual 401 Water Quality Certification must be obtained or waived (see 33 CFR 330.4(c)). The district engineer or State or Tribe may require additional water quality management measures to ensure that the authorized activity does not result in more than minimal degradation of water quality.

26. Coastal Zone Management. In coastal states where an NWP has not previously received a state coastal zone management consistency concurrence, an individual state coastal zone management consistency concurrence must be obtained, or a presumption of concurrence must occur (see 33 CFR 330.4(d)). The district engineer or a State may require additional measures to ensure that the authorized activity is consistent with state coastal zone management requirements.

27. Regional and Case-By-Case Conditions. The activity must comply with any regional conditions that may have been added by the Division Engineer (see 33 CFR 330.4(e)) and with any case specific conditions added by the Corps or by the state, Indian Tribe, or U.S. EPA in its section 401 Water Quality Certification, or by the state in its Coastal Zone Management Act consistency determination.

28. Use of Multiple Nationwide Permits. The use of more than one NWP for a single and complete project is prohibited, except when the acreage loss of waters of the United States authorized by the NWPs does not exceed the acreage limit of the NWP with the highest specified acreage limit. For example, if a road crossing over tidal waters is constructed under NWP 14, with associated bank stabilization authorized by NWP 13, the maximum acreage loss of waters of the United States for the total project cannot exceed 1/3-acre.

29. Transfer of Nationwide Permit Verifications. If the permittee sells the property associated with a nationwide permit verification, the permittee may transfer the nationwide permit verification to the new owner by submitting a letter to the appropriate Corps district office to validate the transfer. A copy of the nationwide permit verification must be attached to the letter, and the letter must contain the following statement and signature:

"When the structures or work authorized by this nationwide permit are still in existence at the time the property is transferred, the terms and conditions of this nationwide permit, including any special conditions, will continue to be binding on the new owner(s) of the property. To validate the transfer of this nationwide permit and the associated liabilities associated with compliance with its terms and conditions, have the transferee sign and date below."

_____

(Transferee)

_____

(Date)

* 30. Compliance Certification. Each permittee who receives an NWP verification letter from the Corps must provide a signed certification documenting completion of the authorized activity and any required compensatory mitigation. The success of any required permittee-responsible mitigation, including the achievement of ecological performance standards, will be addressed separately by the district engineer. The Corps will provide the permittee the certification document with the NWP verification letter. The certification document will include:

(a) A statement that the authorized work was done in accordance with the NWP authorization, including any general, regional, or activity-specific conditions;

(b) A statement that the implementation of any required compensatory mitigation was completed in accordance with the permit conditions. If credits from a mitigation bank or in-lieu fee program are used to satisfy the compensatory mitigation requirements, the certification must include the documentation required by 33 CFR 332.3(l)(3) to confirm that the permittee secured the appropriate number and resource type of credits; and

(c) The signature of the permittee certifying the completion of the work and mitigation.

* 31. Pre-Construction Notification. (a) Timing. Where required by the terms of the NWP, the prospective permittee must notify the district engineer by submitting a pre-construction notification (PCN) as early as possible. The district engineer must determine if the PCN is complete within 30 calendar days of the date of receipt and, if the PCN is determined to be incomplete, notify the prospective permittee within that 30 day period to request the additional information necessary to make the PCN complete. The request must specify the information needed to make the PCN complete. As a general rule, district engineers will request additional information necessary to make the PCN complete only once. However, if the prospective permittee does not provide all of the requested information, then the district engineer will notify the prospective permittee that the PCN is still incomplete and the PCN review process will not commence until all of the requested information has been received by the district engineer. The prospective permittee shall not begin the activity until either:

(1) He or she is notified in writing by the district engineer that the activity may proceed under the NWP with any special conditions imposed by the district or division engineer; or

(2) 45 calendar days have passed from the district engineer's receipt of the complete PCN and the prospective permittee has not received written notice from the district or division engineer. However, if the permittee was required to notify the Corps pursuant to general condition 18 that listed species or critical habitat might be affected or in the vicinity of the project, or to notify the Corps pursuant to general condition 20 that the activity may have the potential to cause effects to historic properties, the permittee cannot begin the activity until receiving written notification from the Corps that there is "no effect" on listed species or "no potential to cause effects" on historic properties, or that any consultation required under Section 7 of the Endangered Species Act (see 33 CFR 330.4(f)) and/or Section 106 of the National Historic Preservation (see 33 CFR 330.4(g)) has been completed. Also, work cannot begin under NWPs 21, 49, or 50 until the permittee has received written approval from the Corps. If the proposed activity requires a written waiver to exceed specified limits of an NWP, the permittee may not begin the activity until the district engineer issues the waiver. If the district or division engineer notifies the permittee in writing that an individual permit is required within 45 calendar days of receipt of a complete PCN, the permittee cannot begin the activity until an individual permit has been obtained. Subsequently, the permittee's right to proceed under the NWP may be modified, suspended, or revoked only in accordance with the procedure set forth in 33 CFR 330.5(d)(2).

(b) Contents of Pre-Construction Notification: The PCN must be in writing and include the following information:

(1) Name, address and telephone numbers of the prospective permittee;

(2) Location of the proposed project;

(3) A description of the proposed project; the project's purpose; direct and indirect adverse environmental effects the project would cause, including the anticipated amount of loss of water of the United States expected to result from the NWP activity, in acres, linear feet, or other appropriate unit of measure; any other NWP(s), regional general permit(s), or individual permit(s) used or intended to be used to authorize any part of the proposed project or any related activity. The description should be sufficiently detailed to allow the district engineer to determine that the adverse effects of the project will be minimal and to determine the need for compensatory mitigation. Sketches should be provided when necessary to show that the activity complies with the terms of the NWP. (Sketches usually clarify the project and when provided results in a quicker decision. Sketches should contain sufficient detail to provide an illustrative description of the proposed activity (e.g., a conceptual plan), but do not need to be detailed engineering plans);

(4) The PCN must include a delineation of wetlands, other special aquatic sites, and other waters, such as lakes and ponds, and perennial, intermittent, and ephemeral streams, on the project site. Wetland delineations must be prepared in accordance with the current method required by the Corps. The permittee may ask the Corps to delineate the special aquatic sites and other waters on the project site, but there may be a delay if the Corps does the delineation, especially if the project site is large or contains many waters of the United States. Furthermore, the 45 day period will not start until the delineation has been submitted to or completed by the Corps, as appropriate;

(5) If the proposed activity will result in the loss of greater than 1/10-acre of wetlands and a PCN is required, the prospective permittee must submit a statement describing how the mitigation requirement will be satisfied, or explaining why the adverse effects are minimal and why compensatory mitigation should not be required. As an alternative, the prospective permittee may submit a conceptual or detailed mitigation plan.

(6) If any listed species or designated critical habitat might be affected or is in the vicinity of the project, or if the project is located in designated critical habitat, for non-Federal applicants the PCN must include the name(s) of those endangered or threatened species that might be affected by the proposed work or utilize the designated critical habitat that may be affected by the proposed work. Federal applicants must provide documentation demonstrating compliance with the Endangered Species Act; and

(7) For an activity that may affect a historic property listed on, determined to be eligible for listing on, or potentially eligible for listing on, the National Register of Historic Places, for non-Federal applicants the PCN must state which historic property may be affected by the proposed work or include a vicinity map indicating the location of the historic property. Federal applicants must provide documentation demonstrating compliance with Section 106 of the National Historic Preservation Act.

(c) Form of Pre-Construction Notification: The standard individual permit application form (Form ENG 4345) may be used, but the completed application form must clearly indicate that it is a PCN and must include all of the information required in paragraphs (b)(1) through (7) of this general condition. A letter containing the required information may also be used.

(d) Agency Coordination: (1) The district engineer will consider any comments from Federal and state agencies concerning the proposed activity's compliance with the terms and conditions of the NWPs and the need for mitigation to reduce the project's adverse environmental effects to a minimal level.

(2) For all NWP activities that require pre-construction notification and result in the loss of greater than 1/2-acre of waters of the United States, for NWP 21, 29, 39, 40, 42, 43, 44, 50, 51, and 52 activities that require pre-construction notification and will result in the loss of greater than 300 linear feet of intermittent and ephemeral stream bed, and for all NWP 48 activities that require pre-construction notification, the district engineer will immediately provide (e.g., via e-mail, facsimile transmission, overnight mail, or other expeditious manner) a copy of the complete PCN to the appropriate Federal or state offices (U.S. FWS, state natural resource or water quality agency, EPA, State Historic Preservation Officer (SHPO) or Tribal Historic Preservation Office (THPO), and, if appropriate, the NMFS). With the exception of NWP 37, these agencies will have 10 calendar days from the date the material is transmitted to telephone or fax the district engineer notice that they intend to provide substantive, site-specific comments. The comments must explain why the agency believes the adverse effects will be more than minimal. If so contacted by an agency, the district engineer will wait an additional 15 calendar days before making a decision on the pre-construction notification. The district engineer will fully consider agency comments received within the specified time frame concerning the proposed activity's compliance with the terms and conditions of the NWPs, including the need for mitigation to ensure the net adverse environmental effects to the aquatic environment of the proposed activity are minimal. The district engineer will provide no response to the resource agency, except as provided below. The district engineer will indicate in the administrative record associated with each pre-construction notification that the resource agencies' concerns were considered. For NWP 37, the emergency watershed protection and rehabilitation activity may proceed immediately in cases where there is an unacceptable hazard to life or a significant loss of property or economic hardship will occur. The district engineer will consider any comments received to decide whether the NWP 37 authorization should be modified, suspended, or revoked in accordance with the procedures at 33 CFR 330.5.

(3) In cases of where the prospective permittee is not a Federal agency, the district engineer will provide a response to NMFS within 30 calendar days of receipt of any Essential Fish Habitat conservation recommendations, as required by Section 305(b)(4)(B) of the Magnuson-Stevens Fishery Conservation and Management Act.

(4) Applicants are encouraged to provide the Corps with either electronic files or multiple copies of pre-construction notifications to expedite agency coordination.

D. District Engineer's Decision

1. In reviewing the PCN for the proposed activity, the district engineer will determine whether the activity authorized by the NWP will result in more than minimal individual or cumulative adverse environmental effects or may be contrary to the public interest. For a linear project, this determination will include an evaluation of the individual crossings to determine whether they individually satisfy the terms and conditions of the NWP(s), as well as the cumulative effects caused by all of the crossings authorized by NWP. If an applicant requests a waiver of the 300 linear foot limit on impacts to intermittent or ephemeral streams or of an otherwise applicable limit, as provided for in NWPs 13, 21, 29, 36, 39, 40, 42, 43, 44, 50, 51 or 52, the district engineer will only grant the waiver upon a written determination that the NWP activity will result in minimal adverse effects. When making minimal effects determinations the district engineer will consider the direct and indirect effects caused by the NWP activity. The district engineer will also consider site specific factors, such as the environmental setting in the

vicinity of the NWP activity, the type of resource that will be affected by the NWP activity, the functions provided by the aquatic resources that will be affected by the NWP activity, the degree or magnitude to which the aquatic resources perform those functions, the extent that aquatic resource functions will be lost as a result of the NWP activity (e.g., partial or complete loss), the duration of the adverse effects (temporary or permanent), the importance of the aquatic resource functions to the region (e.g., watershed or ecoregion), and mitigation required by the district engineer. If an appropriate functional assessment method is available and practicable to use, that assessment method may be used by the district engineer to assist in the minimal adverse effects determination. The district engineer may add case-specific special conditions to the NWP authorization to address site-specific environmental concerns.

2. If the proposed activity requires a PCN and will result in a loss of greater than 1/10-acre of wetlands, the prospective permittee should submit a mitigation proposal with the PCN. Applicants may also propose compensatory mitigation for projects with smaller impacts. The district engineer will consider any proposed compensatory mitigation the applicant has included in the proposal in determining whether the net adverse environmental effects to the aquatic environment of the proposed activity are minimal. The compensatory mitigation proposal may be either conceptual or detailed. If the district engineer determines that the activity complies with the terms and conditions of the NWP and that the adverse effects on the aquatic environment are minimal, after considering mitigation, the district engineer will notify the permittee and include any activity-specific conditions in the NWP verification the district engineer deems necessary. Conditions for compensatory mitigation requirements must comply with the appropriate provisions at 33 CFR 332.3(k). The district engineer must approve the final mitigation plan before the permittee commences work in waters of the United States, unless the district engineer determines that prior approval of the final mitigation plan is not practicable or not necessary to ensure timely completion of the required compensatory mitigation. If the prospective permittee elects to submit a compensatory mitigation plan with the PCN, the district engineer will expeditiously review the proposed compensatory mitigation plan. The district engineer must review the proposed compensatory mitigation plan within 45 calendar days of receiving a complete PCN and determine whether the proposed mitigation would ensure no more than minimal adverse effects on the aquatic environment. If the net adverse effects of the project on the aquatic environment (after consideration of the compensatory mitigation proposal) are determined by the district engineer to be minimal, the district engineer will provide a timely written response to the applicant. The response will state that the project can proceed under the terms and conditions of the NWP, including any activity-specific conditions added to the NWP authorization by the district engineer.

3. If the district engineer determines that the adverse effects of the proposed work are more than minimal, then the district engineer will notify the applicant either: (a) That the project does not qualify for authorization under the NWP and instruct the applicant on the procedures to seek authorization under an individual permit; (b) that the project is authorized under the NWP subject to the applicant’s submission of a mitigation plan that would reduce the adverse effects on the aquatic environment to the minimal level; or (c) that the project is authorized under the NWP with specific modifications or conditions. Where the district engineer determines that mitigation is required to ensure no more than minimal adverse effects occur to the aquatic environment, the activity will be authorized within the 45-day PCN period, with activity-specific

conditions that state the mitigation requirements. The authorization will include the necessary conceptual or detailed mitigation or a requirement that the applicant submit a mitigation plan that would reduce the adverse effects on the aquatic environment to the minimal level. When mitigation is required, no work in waters of the United States may occur until the district engineer has approved a specific mitigation plan or has determined that prior approval of a final mitigation plan is not practicable or not necessary to ensure timely completion of the required compensatory mitigation.

FURTHER INFORMATION

1. District Engineers have authority to determine if an activity complies with the terms and conditions of an NWP.
2. NWPs do not obviate the need to obtain other federal, state, or local permits, approvals, or authorizations required by law.
3. NWPs do not grant any property rights or exclusive privileges.
4. NWPs do not authorize any injury to the property or rights of others.
5. NWPs do not authorize interference with any existing or proposed Federal project.

DEFINITIONS

Best management practices (BMPs): Policies, practices, procedures, or structures implemented to mitigate the adverse environmental effects on surface water quality resulting from development. BMPs are categorized as structural or non-structural.

Compensatory mitigation: The restoration (re-establishment or rehabilitation), establishment (creation), enhancement, and/or in certain circumstances preservation of aquatic resources for the purposes of offsetting unavoidable adverse impacts which remain after all appropriate and practicable avoidance and minimization has been achieved.

Currently serviceable: Useable as is or with some maintenance, but not so degraded as to essentially require reconstruction.

Direct effects: Effects that are caused by the activity and occur at the same time and place.

Discharge: The term “discharge” means any discharge of dredged or fill material.

Enhancement: The manipulation of the physical, chemical, or biological characteristics of an aquatic resource to heighten, intensify, or improve a specific aquatic resource function(s). Enhancement results in the gain of selected aquatic resource function(s), but may also lead to a decline in other aquatic resource function(s). Enhancement does not result in a gain in aquatic resource area.

Ephemeral stream: An ephemeral stream has flowing water only during, and for a short duration after, precipitation events in a typical year. Ephemeral stream beds are located above the water table year-round. Groundwater is not a source of water for the stream. Runoff from rainfall is the primary source of water for stream flow.

Establishment (creation): The manipulation of the physical, chemical, or biological characteristics present to develop an aquatic resource that did not previously exist at an upland site. Establishment results in a gain in aquatic resource area.

High Tide Line: The line of intersection of the land with the water’s surface at the maximum height reached by a rising tide. The high tide line may be determined, in the absence

of actual data, by a line of oil or scum along shore objects, a more or less continuous deposit of fine shell or debris on the foreshore or berm, other physical markings or characteristics, vegetation lines, tidal gages, or other suitable means that delineate the general height reached by a rising tide. The line encompasses spring high tides and other high tides that occur with periodic frequency but does not include storm surges in which there is a departure from the normal or predicted reach of the tide due to the piling up of water against a coast by strong winds such as those accompanying a hurricane or other intense storm.

Historic Property: Any prehistoric or historic district, site (including archaeological site), building, structure, or other object included in, or eligible for inclusion in, the National Register of Historic Places maintained by the Secretary of the Interior. This term includes artifacts, records, and remains that are related to and located within such properties. The term includes properties of traditional religious and cultural importance to an Indian tribe or Native Hawaiian organization and that meet the National Register criteria (36 CFR part 60).

Independent utility: A test to determine what constitutes a single and complete non-linear project in the Corps regulatory program. A project is considered to have independent utility if it would be constructed absent the construction of other projects in the project area. Portions of a multi-phase project that depend upon other phases of the project do not have independent utility. Phases of a project that would be constructed even if the other phases were not built can be considered as separate single and complete projects with independent utility.

Indirect effects: Effects that are caused by the activity and are later in time or farther removed in distance, but are still reasonably foreseeable.

Intermittent stream: An intermittent stream has flowing water during certain times of the year, when groundwater provides water for stream flow. During dry periods, intermittent streams may not have flowing water. Runoff from rainfall is a supplemental source of water for stream flow.

Loss of waters of the United States: Waters of the United States that are permanently adversely affected by filling, flooding, excavation, or drainage because of the regulated activity. Permanent adverse effects include permanent discharges of dredged or fill material that change an aquatic area to dry land, increase the bottom elevation of a waterbody, or change the use of a waterbody. The acreage of loss of waters of the United States is a threshold measurement of the impact to jurisdictional waters for determining whether a project may qualify for an NWP; it is not a net threshold that is calculated after considering compensatory mitigation that may be used to offset losses of aquatic functions and services. The loss of stream bed includes the linear feet of stream bed that is filled or excavated. Waters of the United States temporarily filled, flooded, excavated, or drained, but restored to pre-construction contours and elevations after construction, are not included in the measurement of loss of waters of the United States. Impacts resulting from activities eligible for exemptions under Section 404(f) of the Clean Water Act are not considered when calculating the loss of waters of the United States.

Non-tidal wetland: A non-tidal wetland is a wetland that is not subject to the ebb and flow of tidal waters. The definition of a wetland can be found at 33 CFR 328.3(b). Non-tidal wetlands contiguous to tidal waters are located landward of the high tide line (i.e., spring high tide line).

Open water: For purposes of the NWPs, an open water is any area that in a year with normal patterns of precipitation has water flowing or standing above ground to the extent that an ordinary high water mark can be determined. Aquatic vegetation within the area of standing or

flowing water is either non-emergent, sparse, or absent. Vegetated shallows are considered to be open waters. Examples of "open waters" include rivers, streams, lakes, and ponds.

Ordinary High Water Mark: An ordinary high water mark is a line on the shore established by the fluctuations of water and indicated by physical characteristics, or by other appropriate means that consider the characteristics of the surrounding areas (see 33 CFR 328.3(e)).

Perennial stream: A perennial stream has flowing water year-round during a typical year. The water table is located above the stream bed for most of the year. Groundwater is the primary source of water for stream flow. Runoff from rainfall is a supplemental source of water for stream flow.

Practicable: Available and capable of being done after taking into consideration cost, existing technology, and logistics in light of overall project purposes.

Pre-construction notification: A request submitted by the project proponent to the Corps for confirmation that a particular activity is authorized by nationwide permit. The request may be a permit application, letter, or similar document that includes information about the proposed work and its anticipated environmental effects. Pre-construction notification may be required by the terms and conditions of a nationwide permit, or by regional conditions. A pre-construction notification may be voluntarily submitted in cases where pre-construction notification is not required and the project proponent wants confirmation that the activity is authorized by nationwide permit.

Preservation: The removal of a threat to, or preventing the decline of, aquatic resources by an action in or near those aquatic resources. This term includes activities commonly associated with the protection and maintenance of aquatic resources through the implementation of appropriate legal and physical mechanisms. Preservation does not result in a gain of aquatic resource area or functions.

Re-establishment: The manipulation of the physical, chemical, or biological characteristics of a site with the goal of returning natural/historic functions to a former aquatic resource. Re-establishment results in rebuilding a former aquatic resource and results in a gain in aquatic resource area and functions.

Rehabilitation: The manipulation of the physical, chemical, or biological characteristics of a site with the goal of repairing natural/historic functions to a degraded aquatic resource. Rehabilitation results in a gain in aquatic resource function, but does not result in a gain in aquatic resource area.

Restoration: The manipulation of the physical, chemical, or biological characteristics of a site with the goal of returning natural/historic functions to a former or degraded aquatic resource. For the purpose of tracking net gains in aquatic resource area, restoration is divided into two categories: re-establishment and rehabilitation.

Riffle and pool complex: Riffle and pool complexes are special aquatic sites under the 404(b)(1) Guidelines. Riffle and pool complexes sometimes characterize steep gradient sections of streams. Such stream sections are recognizable by their hydraulic characteristics. The rapid movement of water over a course substrate in riffles results in a rough flow, a turbulent surface, and high dissolved oxygen levels in the water. Pools are deeper areas associated with riffles. A slower stream velocity, a streaming flow, a smooth surface, and a finer substrate characterize pools.

Riparian areas: Riparian areas are lands adjacent to streams, lakes, and estuarine-marine shorelines. Riparian areas are transitional between terrestrial and aquatic ecosystems, through

which surface and subsurface hydrology connects riverine, lacustrine, estuarine, and marine waters with their adjacent wetlands, non-wetland waters, or uplands. Riparian areas provide a variety of ecological functions and services and help improve or maintain local water quality. (See general condition 23.)

Shellfish seeding: The placement of shellfish seed and/or suitable substrate to increase shellfish production. Shellfish seed consists of immature individual shellfish or individual shellfish attached to shells or shell fragments (i.e., spat on shell). Suitable substrate may consist of shellfish shells, shell fragments, or other appropriate materials placed into waters for shellfish habitat.

Single and complete linear project: A linear project is a project constructed for the purpose of getting people, goods, or services from a point of origin to a terminal point, which often involves multiple crossings of one or more waterbodies at separate and distant locations. The term "single and complete project" is defined as that portion of the total linear project proposed or accomplished by one owner/developer or partnership or other association of owners/developers that includes all crossings of a single water of the United States (i.e., a single waterbody) at a specific location. For linear projects crossing a single or multiple waterbodies several times at separate and distant locations, each crossing is considered a single and complete project for purposes of NWP authorization. However, individual channels in a braided stream or river, or individual arms of a large, irregularly shaped wetland or lake, etc., are not separate waterbodies, and crossings of such features cannot be considered separately.

Single and complete non-linear project: For non-linear projects, the term "single and complete project" is defined at 33 CFR 330.2(i) as the total project proposed or accomplished by one owner/developer or partnership or other association of owners/developers. A single and complete non-linear project must have independent utility (see definition of "independent utility"). Single and complete non-linear projects may not be "piecemealed" to avoid the limits in an NWP authorization.

Stormwater management: Stormwater management is the mechanism for controlling stormwater runoff for the purposes of reducing downstream erosion, water quality degradation, and flooding and mitigating the adverse effects of changes in land use on the aquatic environment.

Stormwater management facilities: Stormwater management facilities are those facilities, including but not limited to, stormwater retention and detention ponds and best management practices, which retain water for a period of time to control runoff and/or improve the quality (i.e., by reducing the concentration of nutrients, sediments, hazardous substances and other pollutants) of stormwater runoff.

Stream bed: The substrate of the stream channel between the ordinary high water marks. The substrate may be bedrock or inorganic particles that range in size from clay to boulders. Wetlands contiguous to the stream bed, but outside of the ordinary high water marks, are not considered part of the stream bed.

Stream channelization: The manipulation of a stream's course, condition, capacity, or location that causes more than minimal interruption of normal stream processes. A channelized stream remains a water of the United States.

Structure: An object that is arranged in a definite pattern of organization. Examples of structures include, without limitation, any pier, boat dock, boat ramp, wharf, dolphin, weir, boom, breakwater, bulkhead, revetment, riprap, jetty, artificial island, artificial reef, permanent

mooring structure, power transmission line, permanently moored floating vessel, piling, aid to navigation, or any other manmade obstacle or obstruction.

Tidal wetland: A tidal wetland is a wetland (i.e., water of the United States) that is inundated by tidal waters. The definitions of a wetland and tidal waters can be found at 33 CFR 328.3(b) and 33 CFR 328.3(f), respectively. Tidal waters rise and fall in a predictable and measurable rhythm or cycle due to the gravitational pulls of the moon and sun. Tidal waters end where the rise and fall of the water surface can no longer be practically measured in a predictable rhythm due to masking by other waters, wind, or other effects. Tidal wetlands are located channelward of the high tide line, which is defined at 33 CFR 328.3(d).

Vegetated shallows: Vegetated shallows are special aquatic sites under the 404(b)(1) Guidelines. They are areas that are permanently inundated and under normal circumstances have rooted aquatic vegetation, such as seagrasses in marine and estuarine systems and a variety of vascular rooted plants in freshwater systems.

Waterbody: For purposes of the NWPs, a waterbody is a jurisdictional water of the United States. If a jurisdictional wetland is adjacent – meaning bordering, contiguous, or neighboring – to a waterbody determined to be a water of the United States under 33 CFR 328.3(a)(1)-(6), that waterbody and its adjacent wetlands are considered together as a single aquatic unit (see 33 CFR 328.4(c)(2)). Examples of “waterbodies” include streams, rivers, lakes, ponds, and wetlands.

Final Regional Conditions 2012

NOTICE ABOUT WEB LINKS IN THIS DOCUMENT:
The web links (both internal to our District and any external links to collaborating agencies) in this document are valid at the time of publication. However, the Wilmington District Regulatory Program web page addresses, as with other agency web sites, may change over the timeframe of the five-year Nationwide Permit renewal cycle, in response to policy mandates or technology advances. While we will make every effort to check on the integrity of our web links and provide re-direct pages whenever possible, we ask that you report any broken links to us so we can keep the page information current and usable. We apologize in advanced for any broken links that you may encounter, and we ask that you navigate from the regulatory home page (wetlands and stream permits) of the Wilmington District Corps of Engineers, to the "Permits" section of our web site to find links for pages that cannot be found by clicking directly on the listed web link in this document.

Final 2012 Regional Conditions for Nationwide Permits (NWP) in the Wilmington District

1.0 Excluded Waters

The Corps has identified waters that will be excluded from the use of all NWP's during certain timeframes. These waters are:

1.1 Anadromous Fish Spawning Areas

Waters of the United States identified by either the North Carolina Division of Marine Fisheries (NCDMF) or the North Carolina Wildlife Resources Commission (NCWRC) as anadromous fish spawning areas are excluded during the period between February 15 and June 30, without prior written approval from NCDMF or NCWRC and the Corps.

1.2 Trout Waters Moratorium

Waters of the United States in the twenty-five designated trout counties of North Carolina are excluded during the period between October 15 and April 15 without prior written approval from the NCWRC. (See Section 2.7 for a list of the twenty-five trout counties).

1.3 Sturgeon Spawning Areas as Designated by the National Marine Fisheries Service (NMFS)

Waters of the United States designated as sturgeon spawning areas are excluded during the period between February 1 and June 30, without prior written approval from the NMFS.

* 2.0 Waters Requiring Additional Notification

The Corps has identified waters that will be subject to additional notification requirements for activities authorized by all NWP's. These waters are:

* 2.1 Western NC Counties that Drain to Designated Critical Habitat

For proposed activities within Waters of the U.S. that require a Pre-Construction Notification pursuant to General Condition 31 (PCN) and are located in the sixteen counties listed below, applicants must provide a copy of the PCN to the US Fish and Wildlife Service, 160 Zillicoa Street, Asheville, North Carolina 28801. This PCN must be sent concurrently to the US Fish and Wildlife Service and the Corps Asheville Regulatory Field Office. Please see General Condition 18 for specific notification requirements related to Federally Endangered Species and the following website for information on the location of designated critical habitat.

Counties with tributaries that drain to designated critical habitat that require notification to the Asheville US Fish and Wildlife Service: Avery, Cherokee, Forsyth, Graham, Haywood, Henderson, Jackson, Macon Mecklenburg, Mitchell, Stokes, Surry, Swain, Transylvania, Union and Yancey.

Website and office addresses for Endangered Species Act Information:

The Wilmington District has developed the following website for applicants which provides guidelines on how to review linked websites and maps in order to fulfill NWP general condition 18 requirements: http://www.saw.usace.army.mil/wetlands/ESA

Applicants who do not have internet access may contact the appropriate US Fish and Wildlife Service offices listed below or the US Army Corps of Engineers at (910) 251- 4633:

US Fish and Wildlife Service
Asheville Field Office
160 Zillicoa Street
Asheville, NC 28801
Telephone: (828) 258-3939

Asheville US Fish and Wildlife Service Office counties: All counties west of and including Anson, Stanly, Davidson, Forsyth and Stokes Counties

US Fish and Wildlife Service
Raleigh Field Office
Post Office Box 33726
Raleigh, NC 27636-3726
Telephone: (919) 856-4520

Raleigh US Fish and Wildlife Service Office counties: all counties east of and including Richmond, Montgomery, Randolph, Guilford, and Rockingham Counties.

* **2.2 Special Designation Waters**

Prior to the use of any NWP in any of the following identified waters and contiguous wetlands in North Carolina, applicants must comply with Nationwide Permit General Condition 31 (PCN). The North Carolina waters and contiguous wetlands that require additional notification requirements are:

"Outstanding Resource Waters" (ORW) or "High Quality Waters" (HQW) as designated by the North Carolina Environmental Management Commission; "Inland Primary Nursery Areas" (IPNA) as designated by the NCWRC; "Contiguous Wetlands" as defined by the North Carolina Environmental Management Commission; or "Primary Nursery Areas" (PNA) as designated by the North Carolina Marine Fisheries Commission.

2.3 Coastal Area Management Act (CAMA) Areas of Environmental Concern

Non-federal applicants for any NWP in a designated "Area of Environmental Concern" (AEC) in the twenty (20) counties of Eastern North Carolina covered by the North Carolina Coastal Area Management Act (CAMA) must also obtain the required CAMA permit. Development activities for non-federal projects may not commence until a copy of the approved CAMA permit is furnished to the appropriate Wilmington District Regulatory Field Office (Wilmington Field Office – 69 Darlington Avenue, Wilmington, NC 28403 or Washington Field Office – 2407 West 5th Street, Washington, NC 27889).

* **2.4 Barrier Islands**

Prior to the use of any NWP on a barrier island of North Carolina, applicants must comply with Nationwide Permit General Condition 31 (PCN).

* **2.5 Mountain or Piedmont Bogs**

Prior to the use of any NWP in a Bog classified by the North Carolina Wetland Assessment Methodology (NCWAM), applicants shall comply with Nationwide Permit General Condition 31 (PCN). The latest version of NCWAM is located on the NC DWQ web site at: http://portal.ncdenr.org/web/wq/swp/ws/pdu/ncwam .

* **2.6 Animal Waste Facilities**

Prior to use of any NWP for construction of animal waste facilities in waters of the US, including wetlands, applicants shall comply with Nationwide Permit General Condition 31 (PCN).

* **2.7 Trout Waters**

Prior to any discharge of dredge or fill material into streams or waterbodies within the twenty-five (25) designated trout counties of North Carolina, the applicant shall comply with Nationwide Permit General Condition 31 (PCN). The applicant shall also provide a copy of the notification to the appropriate NCWRC office to facilitate the determination of any potential

impacts to designated Trout Waters. Notification to the Corps of Engineers will include a statement with the name of the NCWRC biologist contacted, the date of the notification, the location of work, a delineation of wetlands, a discussion of alternatives to working in the mountain trout waters, why alternatives were not selected, and a plan to provide compensatory mitigation for all unavoidable adverse impacts to mountain trout waters.

NCWRC and NC Trout Counties

Western Piedmont Region Coordinator	Alleghany	Caldwell	Watauga
20830 Great Smoky Mtn. Expressway	Ashe	Mitchell	Wilkes
Waynesville, NC 28786	Avery	Stokes	
Telephone: (828) 452-2546	Burke	Surry	

Mountain Region Coordinator	Buncombe	Henderson	Polk
20830 Great Smoky Mtn. Expressway	Cherokee	Jackson	Rutherford
Waynesville, NC 28786	Clay	Macon	Swain
Telephone: (828) 452-2546	Graham	Madison	Transylvania
Fax: (828) 452-7772	Haywood	McDowell	Yancey

3.0 List of Corps Regional Conditions for All Nationwide Permits

The following conditions apply to all Nationwide Permits in the Wilmington District:

3.1 Limitation of Loss of Perennial Stream Bed

NWPs may not be used for activities that may result in the loss or degradation of greater than 300 total linear feet of perennial, intermittent or ephemeral stream, unless the District Commander has waived the 300 linear foot limit for ephemeral and intermittent streams on a case-by-case basis and he determines that the proposed activity will result in minimal individual and cumulative adverse impacts to the aquatic environment. Loss of stream includes the linear feet of stream bed that is filled, excavated, or flooded by the proposed activity. Waivers for the loss of ephemeral and intermittent streams must be in writing and documented by appropriate/accepted stream quality assessments*. This waiver only applies to the 300 linear feet threshold for NWPs.

*NOTE: Applicants should utilize the most current methodology prescribed by Wilmington District to assess stream function and quality. Information can be found at:

http://www.saw.usace.army.mil/wetlands/permits/nwp/nwp2012 (see “Quick Links”)

3.2 Mitigation for Loss of Stream Bed

For any NWP that results in a loss of more than 150 linear feet of perennial and/or ephemeral/intermittent stream, the applicant shall provide a mitigation proposal to compensate for more than minimal individual and cumulative adverse impacts to the aquatic environment. For stream losses less than 150 linear feet, that require a PCN, the District Commander may determine, on a case-by-case basis that compensatory mitigation is required to ensure that the activity results in minimal adverse effect on the aquatic environment.

3.3 Pre-construction Notification for Loss of Streambed Exceeding 150 Feet.

Prior to use of any NWP for any activity which impacts more than 150 total linear feet of perennial stream or ephemeral/ intermittent stream, the applicant must comply with Nationwide Permit General Condition 31 (PCN). This applies to NWPs that do not have specific notification requirements. If a NWP has specific notification requirements, the requirements of the NWP should be followed.

3.4 Restriction on Use of Live Concrete

For all NWPs which allow the use of concrete as a building material, live or fresh concrete, including bags of uncured concrete, may not come into contact with the water in or entering into waters of the US. Water inside coffer dams or casings that has been in contact with wet concrete shall only be returned to waters of the US when it is no longer poses a threat to aquatic organisms.

3.5 Requirements for Using Riprap for Bank Stabilization

For all NWPs that allow for the use of riprap material for bank stabilization, the following measures shall be applied:

3.5.1. Filter cloth must be placed underneath the riprap as an additional requirement of its use in North Carolina waters.

3.5.2. The placement of riprap shall be limited to the areas depicted on submitted work plan drawings.

3.5.3. The riprap material shall be clean and free from loose dirt or any pollutant except in trace quantities that would not have an adverse environmental effect.

3.5.4. It shall be of a size sufficient to prevent its movement from the authorized alignment by natural forces under normal conditions.

3.5.5. The riprap material shall consist of clean rock or masonry material such as, but not limited to, granite, marl, or broken concrete.

3.5.6. A waiver from the specifications in this Regional Condition may be requested in writing. The waiver will only be issued if it can be demonstrated that the impacts of complying with this Regional condition would result in greater adverse impacts to the aquatic environment.

3.6 Safe Passage Requirements for Culvert Placement

For all NWPs that involve the construction/installation of culverts, measures will be included in the construction/installation that will promote the safe passage of fish and other aquatic organisms. The dimension, pattern, and profile of the stream above and below a pipe or culvert should not be modified by widening the stream channel or by reducing the depth of the stream in connection with the construction activity. The width, height, and gradient of a proposed culvert should be such as to pass the average historical low flow and spring flow without adversely altering flow velocity. Spring flow should be determined from gage data, if available. In the absence of such data, bankfull flow can be used as a comparable level.

In the twenty (20) counties of North Carolina designated as coastal counties by the Coastal Area Management Act (CAMA): All pipes/culverts must be sufficiently sized to allow for the burial of the bottom of the pipe/culvert at least one foot below normal bed elevation when they are placed within the Public Trust Area of Environmental Concern (AEC) and/or the Estuarine Waters AEC as designated by CAMA, and/or all streams appearing as blue lines on United States Geological Survey (USGS) 7.5-minute quadrangle maps.

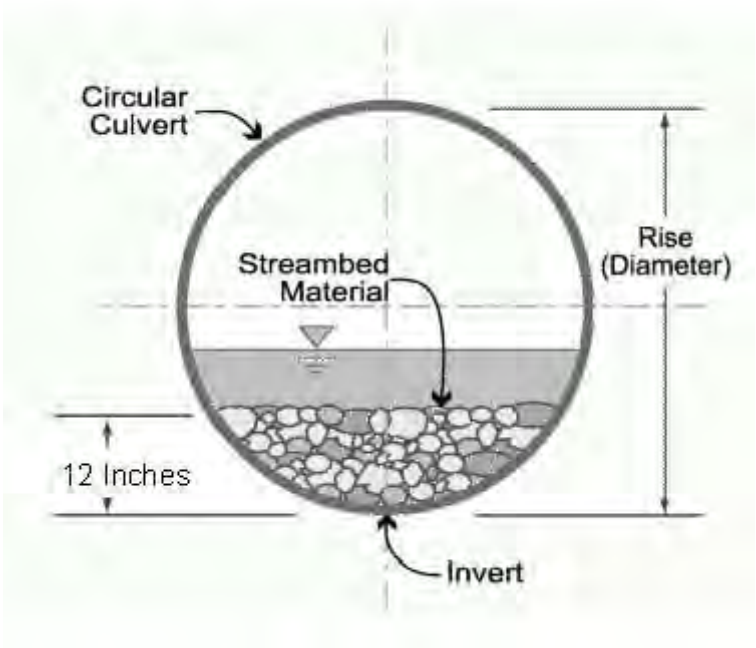

In all other counties: Culverts greater than 48 inches in diameter will be buried at least one foot below the bed of the stream. Culverts 48 inches in diameter or less shall be buried or placed on the stream bed as practicable and appropriate to maintain aquatic passage, and every effort shall be made to maintain the existing channel slope. The bottom of the culvert must be placed at a

depth below the natural stream bottom to provide for passage during drought or low flow conditions.

Culverts are to be designed and constructed in a manner that minimizes destabilization and head cutting. Destabilizing the channel and head cutting upstream should be considered and appropriate actions incorporated in the design and placement of the culvert.

A waiver from the depth specifications in this condition may be requested in writing. The waiver will be issued if it can be demonstrated that the proposal would result in the least impacts to the aquatic environment.

All counties: Culverts placed within riparian and/or riverine wetlands must be installed in a manner that does not restrict the flow and circulation patterns of waters of the United States. Culverts placed across wetland fills purely for the purposes of equalizing surface water do not have to be buried.

3.7 Notification to NCDENR Shellfish Sanitation Section

Applicants shall notify the NCDENR Shellfish Sanitation Section prior to dredging in or removing sediment from an area closed to shell fishing where the effluent may be released to an area open for shell fishing or swimming in order to avoid contamination from the disposal area and cause a temporary shellfish closure to be made. Such notification shall also be provided to the appropriate Corps of Engineers Regulatory Field Office. Any disposal of sand to the ocean beach should occur between November 1 and April 30 when recreational usage is low. Only clean sand should be used and no dredged sand from closed shell fishing areas may be used. If beach disposal were to occur at times other than stated above or if sand from a closed shell fishing area is to be used, a swimming advisory shall be posted, and a press release shall be issued by the permittee.

3.8 Preservation of Submerged Aquatic Vegetation

Adverse impacts to Submerged Aquatic Vegetation (SAV) are not authorized by any NWP within any of the twenty coastal counties defined by North Carolina's Coastal Area Management Act of 1974 (CAMA).

3.9 Sedimentation and Erosion Control Structures and Measures

3.9.1. All PCNs will identify and describe sedimentation and erosion control structures and measures proposed for placement in waters of the US. The structures and measures should be depicted on maps, surveys or drawings showing location and impacts to jurisdictional wetlands and streams.

Water Quality Certification No. 3883

GENERAL CERTIFICATION FOR PROJECTS ELIGIBLE FOR U.S. ARMY CORPS OF ENGINEERS NATIONWIDE PERMIT NUMBERS: 3 (MAINTENANCE), 4 (FISH AND WILDLIFE HARVESTING, ENHANCEMENT, AND ATTRACTION DEVICES AND ACTIVITIES), 5 (SCIENTIFIC MEASUREMENT DEVICES—25 CUBIC YARDS FOR WEIRS AND FLUMES), 6 (SURVEY ACTIVITIES—25 CUBIC YARDS FOR TEMPORARY PADS), 7 (OUTFALL STRUCTURES AND ASSOCIATED INTAKE STRUCTURES), 19 (MINOR DREDGING), 20 (OIL SPILL CLEANUP), 22 (REMOVAL OF VESSELS), 25 (STRUCTURAL DISCHARGE), 30(MOIST SOIL MANAGEMENT FOR WILDLIFE), 32 (COMPLETED ENFORCEMENT ACTIONS), 36 (BOAT RAMPS [IN NONWETLAND SITES]), AND REGIONAL PERMIT 197800056 (PIERS, DOCKS AND BOATHOUSES), AND REGIONAL PERMIT 197800125 (BOAT RAMPS) AND RIPARIAN AREA PROTECTION RULES (BUFFER RULES)

Water Quality Certification Number 3883 is issued in conformity with the requirements of Section 401, Public Laws 92-500 and 95-217 of the United States and subject to the North Carolina Division of Water Quality (DWQ) Regulations in 15 NCAC 02H .0500 and 15 NCAC 02B .0200 for the discharge of fill material to waters and wetland areas which are waters of the United States as described in 33 CFR 330 Appendix A (B) (3, 4, 5, 6, 7, 19, 20, 22, 25, 30, 32, and 36) and Regional Permits 197800056 and 19780125 and for the Riparian Area Protection Rules (Buffer Rules) in 15A NCAC 02B .0200.

The State of North Carolina certifies that the specified category of activity will not violate applicable portions of Sections 301, 302, 303, 306 and 307 of the Public Laws 92-500 and 95-217 if conducted in accordance with the conditions hereinafter set forth.

Activities meeting any one (1) of the following thresholds or circumstances require *written approval* for a 401 Water Quality Certification from the Division of Water Quality (the "Division"):

a. Impacts equal to or greater than 40 linear feet of additional permanent stream impact (including stream relocations) at an existing stream impact location; or
b. Temporary or permanent impacts equal to or greater than one-tenth (1/10) of an acre of wetlands; or
c. Any impact associated with a Notice of Violation or an enforcement action for violation(s) of DWQ Wetland Rules (15A NCAC 02H .0500), Isolated Wetland Rules (15A NCAC 02H .1300), DWQ Surface Water or Wetland Standards, or Riparian Buffer Rules (15A NCAC 02B .0200); or
d. Any impacts to streams and/or buffers in the Neuse, Tar-Pamlico, or Catawba River Basins or in the Randleman, Jordan or Goose Creek Watersheds (or any other basin or watershed with Riparian Area Protection Rules [Buffer Rules] in effect at the time of application) *unless* the activities are listed as "EXEMPT" from these rules or a Buffer Authorization Certificate is issued through N.C. Division of Coastal Management (DCM) delegation for "ALLOWABLE" activities.

* In accordance with North Carolina General Statute 143-215.3D(e), written approval for a 401 Water Quality General Certification must include the appropriate fee. If a project also requires a CAMA Permit, then one payment to both agencies shall be submitted and will be the higher of the two fees.

Activities included in this General Certification that do not meet one of the thresholds listed above do not require written approval from the Division as long as they comply with the Conditions of Certification listed below. If any of these Conditions cannot be met, then written approval from the Division is required.

Conditions of Certification:

1. No Impacts Beyond those Authorized in the Written Approval or Beyond the Threshold of Use of this Certification

   No waste, spoil, solids, or fill of any kind shall occur in wetlands, waters, or riparian areas beyond the footprint of the impacts depicted in the Pre-Construction Notification, as authorized in the written approval from the Division or beyond the thresholds established for use of this Certification without written authorization, including incidental impacts. All construction activities, including the design, installation, operation, and maintenance of sediment and erosion control Best Management Practices shall be performed so that no violations of state water quality standards, statutes, or rules occur. Approved plans and specifications for this project are incorporated by reference and are enforceable parts of this permit.

2. Standard Erosion and Sediment Control Practices

   Erosion and sediment control practices must be in full compliance with all specifications governing the proper design, installation and operation and maintenance of such Best Management Practices and if applicable, comply with the specific conditions and requirements of the NPDES Construction Stormwater Permit issued to the site:

   a. Design, installation, operation, and maintenance of the sediment and erosion control measures must be such that they equal or exceed the requirements specified in the most recent version of the *North Carolina Sediment and Erosion Control Manual*. The devices shall be maintained on all construction sites, borrow sites, and waste pile (spoil) projects, including contractor-owned or leased borrow pits associated with the project.

   b. For borrow pit sites, the erosion and sediment control measures must be designed, installed, operated, and maintained in accordance with the most recent version of the *North Carolina Surface Mining Manual*.

   c. Reclamation measures and implementation must comply with the reclamation in accordance with the requirements of the Sedimentation Pollution Control Act and the Mining Act of 1971.

   d. Sufficient materials required for stabilization and/or repair of erosion control measures and stormwater routing and treatment shall be on site at all times.

   e. If the project occurs in waters or watersheds classified as Primary Nursery Areas (PNAs), SA, WS-I, WS-II, High Quality (HQW), or Outstanding Resource (ORW) waters, then the sedimentation and erosion control designs must comply with the requirements set forth in 15A NCAC 04B .0124, *Design Standards in Sensitive Watersheds*.

3. No Sediment and Erosion Control Measures in Wetlands or Waters

   Sediment and erosion control measures shall not be placed in wetlands or waters. Exceptions to this condition require application submittal to and written approval by the Division. If placement of sediment and erosion control devices in wetlands and waters is unavoidable, then design and placement of temporary erosion control measures shall not be conducted in a manner that may result in dis-equilibrium of wetlands, stream beds, or banks, adjacent to or upstream and downstream of the above structures. All sediment and erosion control devices shall be removed and the natural grade restored within two (2) months of the date that the Division of Land Resources (DLR) or locally delegated program has released the specific area within the project.

4. Construction Stormwater Permit NCG010000

   An NPDES Construction Stormwater Permit is required for construction projects that disturb one (1) or more acres of land. This Permit allows stormwater to be discharged during land disturbing construction activities as stipulated in the conditions of the permit. If your project is covered by this permit, full compliance with permit conditions including the erosion & sedimentation control plan, inspections and maintenance, self-monitoring, record keeping and reporting requirements is required. A copy of the general permit (NCG010000), inspection log sheets, and other information may be found at http://portal.ncdenr.org/web/wq/ws/su/npdessw#tab-w .

   The North Carolina Department of Transportation (NCDOT) shall be required to be in full compliance with the conditions related to construction activities within the most recent version of their individual NPDES (NCS000250) stormwater permit.

5. Work in the Dry

   All work in or adjacent to stream waters shall be conducted so that the flowing stream does not come in contact with the disturbed area. Approved best management practices from the most current version of the NC Sediment and Erosion Control Manual, or the NC DOT Construction and Maintenance Activities Manual, such as sandbags, rock berms, cofferdams, and other diversion structures shall be used to minimize excavation in flowing water. Exceptions to this condition require application submittal to and written approval by the Division.

6. Construction Moratoriums and Coordination

   If activities must occur during periods of high biological activity (i.e. sea turtle nesting, fish spawning, or bird nesting), then biological monitoring may be required at the request of other state or federal agencies and coordinated with these activities.

   All moratoriums on construction activities established by the NC Wildlife Resources Commission (WRC), US Fish and Wildlife Service (USFWS), NC Division of Marine Fisheries (DMF), or National Marine Fisheries Service (NMFS) to lessen impacts on trout, anadromous fish, larval/post-larval fishes and crustaceans, or other aquatic species of concern shall be implemented. Exceptions to this condition require written approval by the resource agency responsible for the given moratorium.

   Work within the twenty-five (25) designated trout counties or identified state or federal endangered or threatened species habitat shall be coordinated with the appropriate WRC, USFWS, NMFS, and/or DMF personnel.

7. Riparian Area Protection Rules (Buffer Rules)

   Activities located in the protected riparian areas (whether jurisdictional wetlands or not), within the Neuse, Tar-Pamlico, or Catawba River Basins or in the Randleman, Jordan, or Goose Creek Watersheds (or any other basin or watershed with buffer rules) shall be limited to "uses" identified within and constructed in accordance with 15A NCAC 02B .0233, .0259, .0243, .0250, .0267 and .0605, and shall be located, designed, constructed, and maintained to have minimal disturbance to protect water quality to the maximum extent practicable through the use of best management practices. All buffer rule requirements, including diffuse flow requirements, must be met.

8. Placement of Culverts and Other Structures in Waters and Wetlands

   Culverts required for this project shall be designed and installed in such a manner that the original stream profiles are not altered and allow for aquatic life movement during low flows. Existing stream dimensions (including the cross section dimensions, pattern, and longitudinal profile) must be maintained above and below locations of each culvert.

   Placement of culverts and other structures in waters and streams must be below the elevation of the streambed by one foot for all culverts with a diameter greater than 48 inches, and 20 percent of the culvert diameter for culverts having a diameter less than or equal to 48 inches, to allow low flow passage of water and aquatic life.

   When topographic constraints indicate culvert slopes of greater than 5%, culvert burial is not required, provided that all alternative options for flattening the slope have been investigated and aquatic life movement/ connectivity has been provided when possible (rock ladders, crossvanes, etc). Notification to the Division including supporting documentation to include a location map of the culvert, culvert profile drawings, and slope calculations shall be provided to the Division 60 days prior to the installation of the culvert.

   When bedrock is present in culvert locations, culvert burial is not required provided that there is sufficient documentation of the presence of bedrock. Notification to the Division including supporting documentation such as, but not limited to, a location map of the culvert, geotechnical reports, photographs, etc shall be provided to the Division a minimum of 60 days prior to the installation of the culvert. If bedrock is discovered during construction, then the Division shall be notified by phone or email within 24 hours of discovery.

   If other site-specific topographic constraints preclude the ability to bury the culverts as described above and/or it can be demonstrated that burying the culvert would result in destabilization of the channel, then exceptions to this condition require application submittal to, and written approval by, the Division of Water Quality, regardless of the total impacts to streams or wetlands from the project.

   Installation of culverts in wetlands must ensure continuity of water movement and be designed to adequately accommodate high water or flood conditions. Additionally, when roadways, causeways, or other fill projects are constructed across FEMA-designated floodways or wetlands, openings such as culverts or bridges must be provided to maintain the natural hydrology of the system as well as prevent constriction of the floodway that may result in destabilization of streams or wetlands.

   The establishment of native, woody vegetation and other soft stream bank stabilization techniques must be used where practicable instead of riprap or other bank hardening methods.

9. If concrete is used during the construction, then all necessary measures shall be taken to prevent direct contact between uncured or curing concrete and waters of the state. Water that inadvertently contacts uncured concrete shall not be discharged to waters of the state due to the potential for elevated pH and possible aquatic life/ fish kills.

10. Applications for riprap groins proposed in accordance with 15A NCAC 07H .1401 (NC Division of Coastal Management General Permit for construction of Wooden and Riprap Groins in Estuarine and Public Trust Waters) must meet all the specific conditions for design and construction specified in 15A NCAC 07H .1405.

11. Bridge deck drains shall not discharge directly into the stream. Stormwater shall be directed across the bridge and pre-treated through site-appropriate means (grassed swales, pre-formed scour holes, vegetated buffers, etc.) before entering the stream. Please refer to the most current version of *Stormwater Best Management Practices*. Exceptions to this condition require written approval by the Division.

* 12. Compensatory Mitigation

In accordance with 15A NCAC 02H .0506 (h), compensatory mitigation may be required for losses of equal to or greater than 150 linear feet of streams (intermittent and perennial) and/or equal to or greater than one (1) acre of wetlands. For linear public transportation projects, impacts equal to or exceeding 150 linear feet per stream shall require mitigation.

Buffer mitigation may be required for any project with Buffer Rules in effect at the time of application for activities classified as "Allowable with Mitigation" or "Prohibited" within the Table of Uses.

A determination of buffer, wetland, and stream mitigation requirements shall be made for any General Water Quality Certification for this Nationwide and/or Regional General Permit. Design and monitoring protocols shall follow the US Army Corps of Engineers Wilmington District *Stream Mitigation Guidelines* (April 2003) or its subsequent updates. Compensatory mitigation plans shall be submitted to the Division for written approval as required in those protocols. The mitigation plan must be implemented and/or constructed before any impacts occur on site. Alternatively, the Division will accept payment into an in-lieu fee program or a mitigation bank. In these cases, proof of payment shall be provided to the Division before any impacts occur on site.

13. All temporary fill and culverts shall be removed and the impacted area returned to natural conditions within 60 days of the determination that the temporary impact is no longer necessary. The impacted areas shall be restored to original grade, including each stream's original cross sectional dimensions, plan form pattern, and longitudinal bed and bed profile, and the various sites shall be stabilized with natural woody vegetation (except for the approved maintenance areas) and restored to prevent erosion.

14. All temporary pipes/ culverts/ riprap pads etc, shall be installed in all streams as outlined in the most recent edition of the *North Carolina Sediment and Erosion Control Planning and Design Manual* or the *North Carolina Surface Mining Manual* so as not to restrict stream flow or cause dis-equilibrium during use of this General Certification.

15. Any riprap required for proper culvert placement, stream stabilization, or restoration of temporarily disturbed areas shall be restricted to the area directly impacted by the approved construction activity. All rip-rap shall buried and/or "keyed in" such that the original stream elevation and streambank contours are restored and maintained. Placement of rip-rap or other approved materials shall not result in de-stabilization of the stream bed or banks upstream or downstream of the area.

16. Any rip-rap used for stream stabilization shall be of a size and density so as not to be able to be carried off by wave, current action, or stream flows and consist of clean rock or masonry material free of debris or toxic pollutants. Rip-rap shall not be installed in the streambed except in specific areas required for velocity control and to ensure structural integrity of bank stabilization measures.

17. A one-time application of fertilizer to re-establish vegetation is allowed in disturbed areas including riparian buffers, but is restricted to no closer than 10 feet from top of bank of streams. Any fertilizer application must comply with all other Federal, State and Local regulations.

* 18. If an environmental document is required under the National or State Environmental Policy Act (NEPA or SEPA), then this General Certification is not valid until a Finding of No Significant Impact (FONSI) or Record of Decision (ROD) is issued by the State Clearinghouse.

19. In the twenty (20) coastal counties, the appropriate DWQ Regional Office must be contacted to determine if Coastal Stormwater Regulations will be required.

20. This General Certification does not relieve the applicant of the responsibility to obtain all other required Federal, State, or Local approvals.

21. The applicant/permittee and their authorized agents shall conduct all activities in a manner consistent with State water quality standards (including any requirements resulting from compliance with §303(d) of the Clean Water Act), and any other appropriate requirements of State and Federal Law. If the Division determines that such standards or laws are not being met, including failure to sustain a designated or achieved use, or that State or Federal law is being violated, or that further conditions are necessary to assure compliance, then the Division may reevaluate and modify this General Water Quality Certification.

* 22. When written authorization is required for use of this certification, upon completion of all permitted impacts included within the approval and any subsequent modifications, the applicant shall be required to return the certificate of completion attached to the approval. One copy of the certificate shall be sent to the DWQ Central Office in Raleigh at 1650 Mail Service Center, Raleigh, NC, 27699-1650.

23. Additional site-specific conditions, including monitoring and/or modeling requirements, may be added to the written approval letter for projects proposed under this Water Quality Certification in order to ensure compliance with all applicable water quality and effluent standards.

24. This certification grants permission to the director, an authorized representative of the Director, or DENR staff, upon the presentation of proper credentials, to enter the property during normal business hours.

This General Certification shall expire on the same day as the expiration date of the corresponding Nationwide and/or Regional General Permit. The conditions in effect on the date of issuance of Certification for a specific project shall remain in effect for the life of the project, regardless of the expiration date of this Certification.

Non-compliance with or violation of the conditions herein set forth by a specific project may result in revocation of this General Certification for the project and may also result in criminal and/or civil penalties.

The Director of the North Carolina Division of Water Quality may require submission of a formal application for Individual Certification for any project in this category of activity if it is determined that the project is likely to have a significant adverse effect upon water quality, including state or federally listed endangered or threatened aquatic species, or degrade the waters so that existing uses of the wetland or downstream waters are precluded.

Public hearings may be held for specific applications or group of applications prior to a Certification decision if deemed in the public's best interest by the Director of the North Carolina Division of Water Quality.

Effective date: March 19, 2012

DIVISION OF WATER QUALITY

By

Charles Wakild, P.E.

Director

History Note: Water Quality Certification (WQC) Number 3883 issued March 19, 2012 replaces WQC Number 3687 issued November 1, 2007; WQC Number 3624 issued March 19, 2007; WQC Number 3494 issued December 31, 2004; and WQC Number 3376 issued March 18, 2002. This General Certification is rescinded when the Corps of Engineers reauthorizes any of the corresponding Nationwide and/or Regional General Permits or when deemed appropriate by the Director of the Division of Water Quality.

09/08/99

TIP PROJECT: B-3159

CONTRACT:

See Sheet 1-A For Index of Sheets

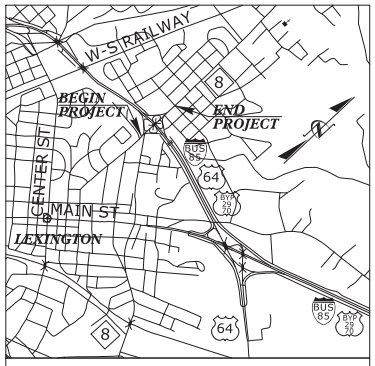

VICINITY MAP

STATE OF NORTH CAROLINA
DIVISION OF HIGHWAYS

DAVIDSON COUNTY

LOCATION: BRIDGE NO. 27 OVER US 29-64-70 /I-85 BUS ON NC 8 /US 52
TYPE OF WORK: GRADING, DRAINAGE, PAVING, RETAINING WALL, SIGNALS & STRUCTURE

SURFACE WATER IMPACTS PERMIT

STATE	STATE PROJECT REFERENCE NO.	SHEET NO.	TOTAL SHEETS
N.C.	B-3159	1	

STATE PROJ. NO.	F.A. PROJ. NO.	DESCRIPTION
38331.1.1	STPNHS-0052(31)	PE

PERMIT DRAWING
SHEET 1 OF 5

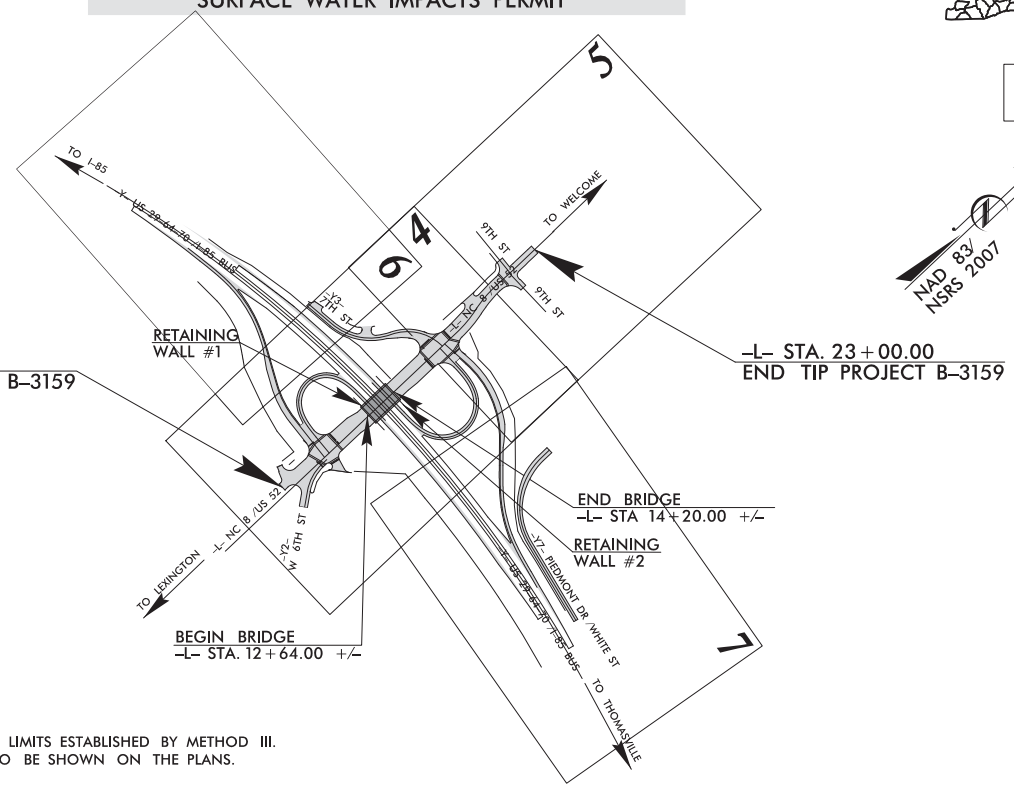

NAD 83/
NSRS 2007

P-40

CLEARING ON THIS PROJECT SHOULD BE PERFORMED TO THE LIMITS ESTABLISHED BY METHOD III.
THIS IS A FULL CONTROL OF ACCESS PROJECT WITH ACCESS TO BE SHOWN ON THE PLANS.
THIS PROJECT IS WITHIN THE CITY LIMITS OF LEXINGTON.

INCOMPLETE PLANS
DO NOT USE FOR R/W ACQUISITION
PRELIMINARY PLANS
DO NOT USE FOR CONSTRUCTION

GRAPHIC SCALES

50 25 0 50 100
PLANS

50 25 0 50 100
PROFILE (HORIZONTAL)

10 5 0 10 20
PROFILE (VERTICAL)

DESIGN DATA

ADT 2009 = 23,900
ADT 2035 = 28,600
DHV = 10 %
D = 60 %
T = 5 % *
V = 40 MPH
* TTST = 2 DUAL 3
FUNC CLASS = ARTERIAL
STATEWIDE TIER

PROJECT LENGTH

LENGTH ROADWAY OF TIP PROJECT B-3159 = 0.259 MILES
LENGTH STRUCTURE OF TIP PROJECT B-3159 = 0.030 MILES
TOTAL LENGTH OF TIP PROJECT B-3159 = 0.289 MILES

Prepared In the Office of:
DIVISION OF HIGHWAYS
1000 Birch Ridge Dr., Raleigh NC, 27610

2012 STANDARD SPECIFICATIONS

RIGHT OF WAY DATE:
JUNE 20, 2014

LETTING DATE:
JUNE 16, 2015

TONY HOUSER, PE
PROJECT ENGINEER

BRUCE PAYNE, PE
PROJECT DESIGN ENGINEER

HYDRAULICS ENGINEER
SIGNATURE:

ROADWAY DESIGN ENGINEER
SIGNATURE:

7/14/2014
R:\Hydraulics\PERMITS_Enviornmental\Drawings\B3159_hyd_prm_tsh.dgn
chrtkemb

PROJECT REFERENCE NO.	SHEET NO.
B-3159	6
R/W SHEET NO.	
ROADWAY DESIGN ENGINEER	HYDRAULICS ENGINEER

INCOMPLETE PLANS
DO NOT USE FOR R/W ACQUISITION
PRELIMINARY PLANS
DO NOT USE FOR CONSTRUCTION

PERMIT DRAWING
SHEET 2 OF 5

LEGEND

DENOTES TEMPORARY IMPACTS IN SURFACE WATER

GRAPHIC SCALE 100' 0' 100'

NAD 83/NSRS 2007

-RPC-

PIs Sta 11+97.82	PI Sta 13+50.37	PIs Sta 15+01.75
Θs = 8° 58' 47.7"	Δ = 17° 41' 38.5" (RT)	Θs = 8° 58' 47.7"
Ls = 184.00'	D = 9° 45' 38.8"	Ls = 184.00'
LT = 122.82'	L = 181.28'	LT = 122.82'
ST = 61.48'	T = 91.37'	ST = 61.48'
	R = 587.00'	
	SE = .08	

-Y-

PI Sta 25+58.78
Δ = 30° 35' 22.0" (RT)
D = 1° 00' 18.7"
L = 3,043.15'
T = 1,558.78'
R = 5,700.00'
SE = EXIST

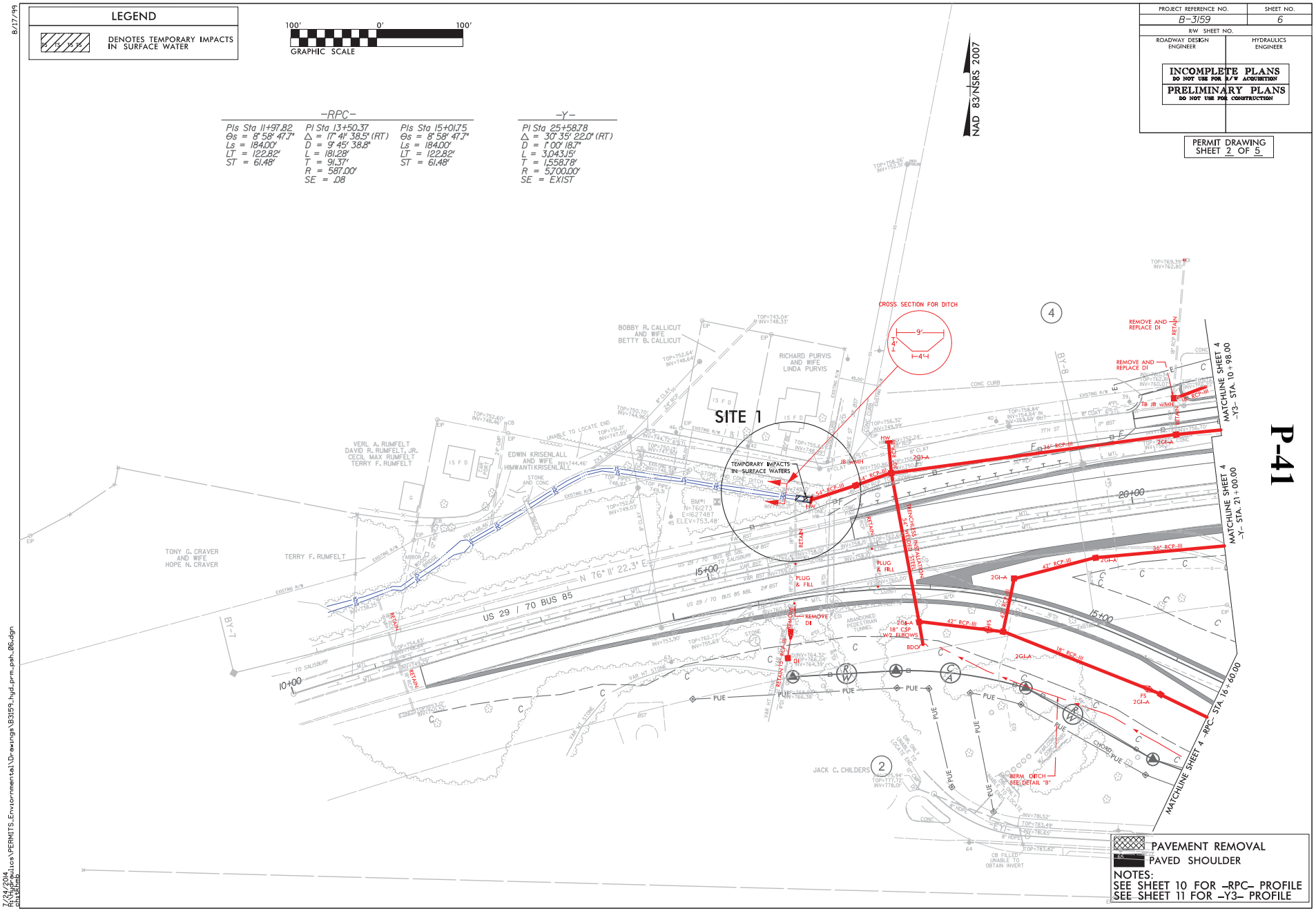

PAVEMENT REMOVAL
PAVED SHOULDER

NOTES:
SEE SHEET 10 FOR -RPC- PROFILE
SEE SHEET 11 FOR -Y3- PROFILE

P-41

8/17/99

7/24/2014
R:\Hydraulics\PERMITS_Environmental\Drawings\B3159_hyd_prm_psh_06.dgn
chrisstmp

PROJECT REFERENCE NO.	SHEET NO.
B-3159	6a
R/W SHEET NO.	
ROADWAY DESIGN ENGINEER	HYDRAULICS ENGINEER

INCOMPLETE PLANS
DO NOT USE FOR R/W ACQUISITION
PRELIMINARY PLANS
DO NOT USE FOR CONSTRUCTION

PERMIT DRAWING
SHEET 3 OF 5

LEGEND

DENOTES TEMPORARY IMPACTS IN SURFACE WATER

GRAPHIC SCALE 100' 0' 100'

NAD 83/NSRS 2007

–RPC–

PIs Sta 11+97.82	PI Sta 13+50.37	PIs Sta 15+01.75
Θs = 8° 58' 47.7"	Δ = 17° 41' 38.5" (RT)	Θs = 8° 58' 47.7"
Ls = 184.00'	D = 9° 45' 38.8"	Ls = 184.00'
LT = 122.82'	L = 181.28'	LT = 122.82'
ST = 61.48'	T = 91.37'	ST = 61.48'
	R = 587.00'	
	SE = .08	

–Y–

PI Sta 25+58.78
Δ = 30° 35' 22.0" (RT)
D = 1° 00' 18.7"
L = 3,043.15'
T = 1,558.78'
R = 5,700.00'
SE = EXIST

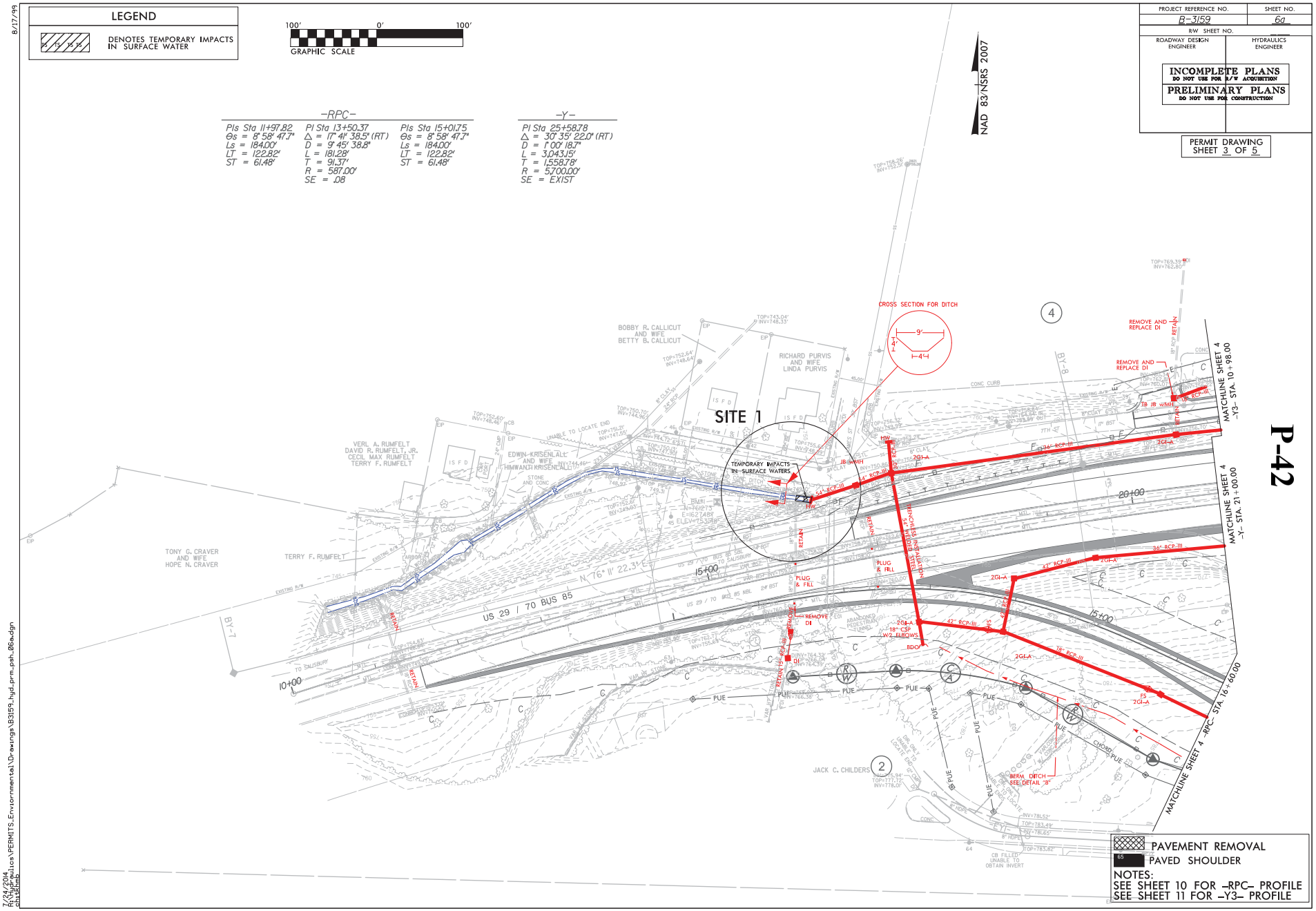

PAVEMENT REMOVAL
PAVED SHOULDER

NOTES:
SEE SHEET 10 FOR –RPC– PROFILE
SEE SHEET 11 FOR –Y3– PROFILE

P-42

8/17/99

7/24/2014
R:\Hydraulics\PERMITS_Environmental\Drawings\B3159_hyd_prm_psh_06a.dgn
chrisstmp

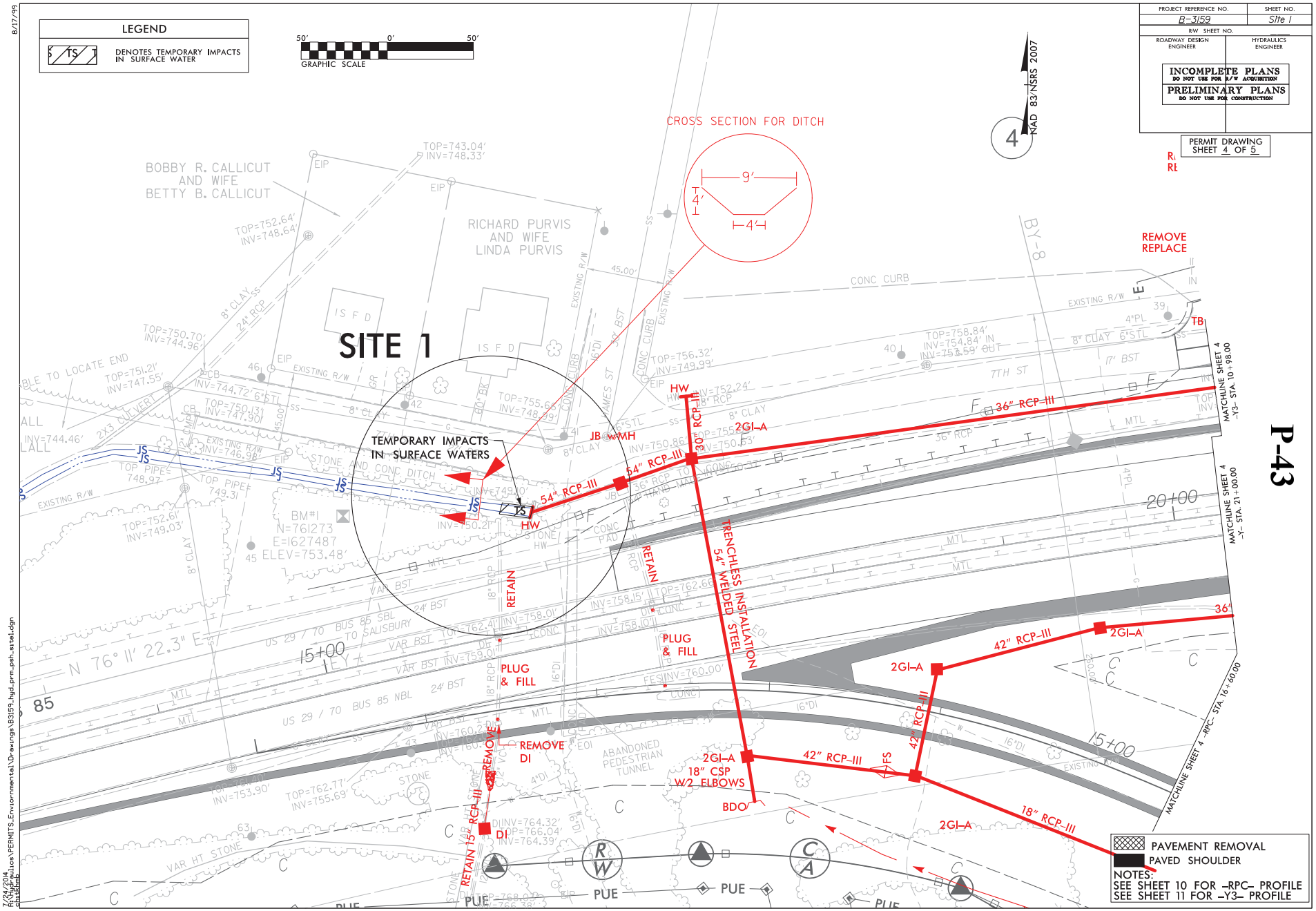

PROJECT REFERENCE NO.	SHEET NO.
B-3159	Site 1
R/W SHEET NO.	
ROADWAY DESIGN ENGINEER	HYDRAULICS ENGINEER

INCOMPLETE PLANS
DO NOT USE FOR R/W ACQUISITION
PRELIMINARY PLANS
DO NOT USE FOR CONSTRUCTION

PERMIT DRAWING
SHEET 4 OF 5

8/17/99

7/24/2014
R:\Hydraulics\PERMITS_Environmental\Drawings\B3159_hyd_prm_psh_site1.dgn
cbrisette

P-43

WETLAND PERMIT IMPACT SUMMARY

			WETLAND IMPACTS					SURFACE WATER IMPACTS				
Site No.	Station (From/To)	Structure Size / Type	Permanent Fill In Wetlands (ac)	Temp. Fill In Wetlands (ac)	Excavation in Wetlands (ac)	Mechanized Clearing in Wetlands (ac)	Hand Clearing in Wetlands (ac)	Permanent SW impacts (ac)	Temp. SW impacts (ac)	Existing Channel Impacts Permanent (ft)	Existing Channel Impacts Temp. (ft)	Natural Stream Design (ft)
1	-Y- 16+17 to 16+35	54" RCP							<0.01		18	
TOTALS:									<0.01		18	

NC DEPARTMENT OF TRANSPORTATION
DIVISION OF HIGHWAYS

DAVIDSON COUNTY
TIP B-3159
Bridge No. 27

Sheet 5 of 5

7/24/2014

ATN Revised 3/31/05

United States Department of the Interior

FISH AND WILDLIFE SERVICE
Asheville Field Office
160 Zillicoa Street
Asheville, North Carolina 28801

September 10, 2015

Mr. Richard W. Hancock
North Carolina Department of Transportation
Project Development and Environmental Analysis Unit
1598 Mail Service Center
Raleigh, NC 27699-1598

Subject: Endangered Species Concurrence for the Proposed Replacement of Bridge No. 27 on NC 8 (Winston Road) over US 29-64-70/I-85 Business Loop, Davidson County, North Carolina. Federal Aid Project No. STPNHS-0052(31), TIP No B-3159.

Dear Richard:

As requested by the North Carolina Department of Transportation (NCDOT) in your letter of August 12, 2015, we have reviewed the natural resources information and biological conclusion with regard to the federally threatened northern long-eared bat (NLEB) (*Myotis septentrionalis*) for the subject project. We provide the following comments in accordance with the provisions of section 7 of the Endangered Species Act of 1973, as amended (16 U.S.C. 1531-1543) (Act).

The NCDOT proposes to replace Bridge No. 27 over US 29-64-70/I-85 Business Loop on US 50/NC 8 in Davidson County. Approximately 1.5 acres of trees will be cleared to construct the bridge and these acres provide marginal summer roost habitat for the NLEB. A search for mines and caves was conducted in the project footprint and within a quarter mile of the project and none were found. The existing bridge was inspected for signs of bat use and none was found.

Based on the negative surveys for wintering habitat and the commitment by NCDOT to cut trees between August 15th and May 15th of any year we agree that replacing Bridge No 27 is "not likely to adversely affect" northern long-eared bat. In view of this, we believe the requirements under Section 7(c) of the Act are fulfilled. However, obligations under Section 7 of the Act must be reconsidered if: (1) new information reveals impacts of this identified action that may affect listed species or critical habitat in a manner not previously considered, (2) this action is subsequently modified in a manner that was not considered in this review, or (3) a new species is listed or critical habitat is determined that may be affected by the identified action.

If you have questions about these comments, please contact Ms. Marella Buncick of our staff at 828/258-3939, Ext. 237. In any future correspondence concerning this project, please reference our Log No. 4-2-15-422.

Sincerely,

- - original signed - -
Janet Mizzi
Field Supervisor

County : Davidson

Line #	Item Number	Sec #	Description	Quantity	Unit Cost	Amount
			ROADWAY ITEMS			
0001	0000100000-N	800	MOBILIZATION	Lump Sum	L.S.	
0002	0000400000-N	801	CONSTRUCTION SURVEYING	Lump Sum	L.S.	
0003	0043000000-N	226	GRADING	Lump Sum	L.S.	
0004	0050000000-E	226	SUPPLEMENTARY CLEARING & GRUBBING	1 ACR		
0005	0057000000-E	226	UNDERCUT EXCAVATION	2,500 CY		
0006	0141000000-E	240	BERM DITCH CONSTRUCTION	410 LF		
0007	0195000000-E	265	SELECT GRANULAR MATERIAL	1,000 CY		
0008	0196000000-E	270	GEOTEXTILE FOR SOIL STABILIZATION	2,682 SY		
0009	0199000000-E	SP	TEMPORARY SHORING	4,117.3 SF		
0010	0255000000-E	SP	GENERIC GRADING ITEM HAULING & DISPOSAL OF PETROLEUM CONTAMINATED SOIL	100 TON		
0011	0318000000-E	300	FOUNDATION CONDITIONING MATERIAL, MINOR STRUCTURES	1,067 TON		
0012	0320000000-E	300	FOUNDATION CONDITIONING GEOTEXTILE	2,760 SY		
0013	0343000000-E	310	15" SIDE DRAIN PIPE	44 LF		
0014	0360000000-E	310	12" RC PIPE CULVERTS, CLASS III	60 LF		
0015	0366000000-E	310	15" RC PIPE CULVERTS, CLASS III	724 LF		
0016	0372000000-E	310	18" RC PIPE CULVERTS, CLASS III	3,560 LF		
0017	0378000000-E	310	24" RC PIPE CULVERTS, CLASS III	428 LF		
0018	0384000000-E	310	30" RC PIPE CULVERTS, CLASS III	548 LF		

County : Davidson

Line #	Item Number	Sec #	Description	Quantity	Unit Cost	Amount
0019	0390000000-E	310	36" RC PIPE CULVERTS, CLASS III	1,544 LF		
0020	0396000000-E	310	42" RC PIPE CULVERTS, CLASS III	588 LF		
0021	0408000000-E	310	54" RC PIPE CULVERTS, CLASS III	32 LF		
0022	0448200000-E	310	15" RC PIPE CULVERTS, CLASS IV	24 LF		
0023	0582000000-E	310	15" CS PIPE CULVERTS, 0.064" THICK	108 LF		
0024	0588000000-E	310	18" CS PIPE CULVERTS, 0.064" THICK	100 LF		
0025	0636000000-E	310	**" CS PIPE ELBOWS, *****" THICK (15", 0.064")	4 EA		
0026	0636000000-E	310	**" CS PIPE ELBOWS, *****" THICK (18", 0.064")	4 EA		
0027	0973100000-E	330	**" WELDED STEEL PIPE, ****" THICK, GRADE B IN SOIL (18", 0.312")	140 LF		
0028	0973100000-E	330	**" WELDED STEEL PIPE, ****" THICK, GRADE B IN SOIL (36", 0.531")	156 LF		
0029	0973100000-E	330	**" WELDED STEEL PIPE, ****" THICK, GRADE B IN SOIL (42", 0.625")	176 LF		
0030	0986000000-E	SP	GENERIC PIPE ITEM 56" X 40" ELLIPSE PIPE LINER	19 LF		
0031	0987000000-E	310	GENERIC PIPE ITEM 43" X 68" ELLIPSE RC PIPE CLASS III	40 LF		
0032	0995000000-E	340	PIPE REMOVAL	1,713 LF		
0033	1099500000-E	505	SHALLOW UNDERCUT	1,000 CY		
0034	1099700000-E	505	CLASS IV SUBGRADE STABILIZA-TION	1,800 TON		

County : Davidson

Line #	Item Number	Sec #	Description	Quantity	Unit Cost	Amount
0035	1121000000-E	520	AGGREGATE BASE COURSE	1,340 TON		
0036	1220000000-E	545	INCIDENTAL STONE BASE	100 TON		
0037	1275000000-E	600	PRIME COAT	469 GAL		
0038	1297000000-E	607	MILLING ASPHALT PAVEMENT, ***" DEPTH (3")	12,850 SY		
0039	1308000000-E	607	MILLING ASPHALT PAVEMENT, ***" TO ******" (0" TO 3")	2,000 SY		
0040	1489000000-E	610	ASPHALT CONC BASE COURSE, TYPE B25.0B	6,600 TON		
0041	1491000000-E	610	ASPHALT CONC BASE COURSE, TYPE B25.0C	6,210 TON		
0042	1498000000-E	610	ASPHALT CONC INTERMEDIATE COURSE, TYPE I19.0B	3,765 TON		
0043	1503000000-E	610	ASPHALT CONC INTERMEDIATE COURSE, TYPE I19.0C	1,725 TON		
0044	1519000000-E	610	ASPHALT CONC SURFACE COURSE, TYPE S9.5B	4,280 TON		
0045	1523000000-E	610	ASPHALT CONC SURFACE COURSE, TYPE S9.5C	3,810 TON		
0046	1575000000-E	620	ASPHALT BINDER FOR PLANT MIX	1,310 TON		
0047	1693000000-E	654	ASPHALT PLANT MIX, PAVEMENT REPAIR	609 TON		
0048	2000000000-N	806	RIGHT OF WAY MARKERS	43 EA		
0049	2022000000-E	815	SUBDRAIN EXCAVATION	134.4 CY		
0050	2026000000-E	815	GEOTEXTILE FOR SUBSURFACE DRAINS	600 SY		
0051	2036000000-E	815	SUBDRAIN COARSE AGGREGATE	100.8 CY		
0052	2044000000-E	815	6" PERFORATED SUBDRAIN PIPE	600 LF		

County : Davidson

Line #	Item Number	Sec #	Description	Quantity	Unit Cost	Amount
0053	2070000000-N	815	SUBDRAIN PIPE OUTLET	2 EA		
0054	2077000000-E	815	6" OUTLET PIPE	12 LF		
0055	2209000000-E	838	ENDWALLS	2.3 CY		
0056	2253000000-E	840	PIPE COLLARS	1.151 CY		
0057	2275000000-E	SP	FLOWABLE FILL	542 CY		
0058	2286000000-N	840	MASONRY DRAINAGE STRUCTURES	76 EA		
0059	2297000000-E	840	MASONRY DRAINAGE STRUCTURES	11.135 CY		
0060	2308000000-E	840	MASONRY DRAINAGE STRUCTURES	125.2 LF		
0061	2364000000-N	840	FRAME WITH TWO GRATES, STD 840.16	6 EA		
0062	2364200000-N	840	FRAME WITH TWO GRATES, STD 840.20	5 EA		
0063	2365000000-N	840	FRAME WITH TWO GRATES, STD 840.22	31 EA		
0064	2367000000-N	840	FRAME WITH TWO GRATES, STD 840.29	1 EA		
0065	2374000000-N	840	FRAME WITH GRATE & HOOD, STD 840.03, TYPE ** (E)	5 EA		
0066	2374000000-N	840	FRAME WITH GRATE & HOOD, STD 840.03, TYPE ** (F)	8 EA		
0067	2374000000-N	840	FRAME WITH GRATE & HOOD, STD 840.03, TYPE ** (G)	13 EA		
0068	2396000000-N	840	FRAME WITH COVER, STD 840.54	11 EA		
0069	2451000000-N	852	CONCRETE TRANSITIONAL SECTION FOR DROP INLET	5 EA		
0070	2549000000-E	846	2'-6" CONCRETE CURB & GUTTER	4,030 LF		

County : Davidson

Line #	Item Number	Sec #	Description	Quantity	Unit Cost	Amount
0071	2605000000-N	848	CONCRETE CURB RAMP	26 EA		
0072	2619000000-E	850	4" CONCRETE PAVED DITCH	11 SY		
0073	2655000000-E	852	5" MONOLITHIC CONCRETE ISLANDS (KEYED IN)	925 SY		
0074	2724000000-E	857	PRECAST REINFORCED CONCRETE BARRIER, SINGLE FACED	625 LF		
0075	2738000000-E	SP	GENERIC PAVING ITEM 5' STAMPED CONCRETE SIDEWALK	1,050 SY		
0076	2738000000-E	SP	GENERIC PAVING ITEM TEMPORARY SIDEWALK	400 SY		
0077	2815000000-N	858	ADJUSTMENT OF DROP INLETS	1 EA		
0078	2845000000-N	858	ADJUSTMENT OF METER BOXES OR VALVE BOXES	33 EA		
0079	2860000000-N	859	CONVERT EXISTING CATCH BASIN TO JUNCTION BOX	1 EA		
0080	2905000000-N	859	CONVERT EXISTING DROP INLET TO JUNCTION BOX	1 EA		
0081	3030000000-E	862	STEEL BM GUARDRAIL	6,225 LF		
0082	3105000000-N	862	STEEL BM GUARDRAIL TERMINAL SECTIONS	8 EA		
0083	3150000000-N	862	ADDITIONAL GUARDRAIL POSTS	5 EA		
0084	3165000000-N	SP	GUARDRAIL ANCHOR UNITS, TYPE ********** (350, TL-2)	2 EA		
0085	3180000000-N	862	GUARDRAIL ANCHOR UNITS, TYPE ********** (W-BEAM)	2 EA		
0086	3195000000-N	862	GUARDRAIL ANCHOR UNITS, TYPE AT-1	1 EA		
0087	3215000000-N	862	GUARDRAIL ANCHOR UNITS, TYPE III	4 EA		

County : Davidson

Line #	Item Number	Sec #	Description	Quantity	Unit Cost	Amount
0088	3270000000-N	SP	GUARDRAIL ANCHOR UNITS, TYPE 350	7 EA		
0089	3317000000-N	862	GUARDRAIL ANCHOR UNITS, TYPE B-77	6 EA		
0090	3360000000-E	863	REMOVE EXISTING GUARDRAIL	6,800 LF		
0091	3536000000-E	866	CHAIN LINK FENCE, 48" FABRIC	4,050 LF		
0092	3542000000-E	866	METAL LINE POSTS FOR 48" CHAIN LINK FENCE	346 EA		
0093	3548000000-E	866	METAL TERMINAL POSTS FOR 48" CHAIN LINK FENCE	59 EA		
0094	3628000000-E	876	RIP RAP, CLASS I	15 TON		
0095	3649000000-E	876	RIP RAP, CLASS B	13 TON		
0096	3656000000-E	876	GEOTEXTILE FOR DRAINAGE	751 SY		
0097	4048000000-E	902	REINFORCED CONCRETE SIGN FOUN-DATIONS	13 CY		
0098	4054000000-E	902	PLAIN CONCRETE SIGN FOUNDA-TIONS	1 CY		
0099	4060000000-E	903	SUPPORTS, BREAKAWAY STEEL BEAM	3,711 LB		
0100	4066000000-E	903	SUPPORTS, SIMPLE STEEL BEAM	6,248 LB		
0101	4072000000-E	903	SUPPORTS, 3-LB STEEL U-CHANNEL	943 LF		
0102	4096000000-N	904	SIGN ERECTION, TYPE D	2 EA		
0103	4102000000-N	904	SIGN ERECTION, TYPE E	63 EA		
0104	4108000000-N	904	SIGN ERECTION, TYPE F	11 EA		
0105	4110000000-N	904	SIGN ERECTION, TYPE *** (GROUND MOUNTED) (A)	6 EA		

County : Davidson

Line #	Item Number	Sec #	Description	Quantity	Unit Cost	Amount
0106	4152000000-N	907	DISPOSAL OF SIGN SYSTEM, STEEL BEAM	9 EA		
0107	4155000000-N	907	DISPOSAL OF SIGN SYSTEM, U-CHANNEL	78 EA		
0108	4400000000-E	1110	WORK ZONE SIGNS (STATIONARY)	1,050 SF		
0109	4405000000-E	1110	WORK ZONE SIGNS (PORTABLE)	1,000 SF		
0110	4410000000-E	1110	WORK ZONE SIGNS (BARRICADE MOUNTED)	200 SF		
0111	4415000000-N	1115	FLASHING ARROW BOARD	4 EA		
0112	4420000000-N	1120	PORTABLE CHANGEABLE MESSAGE SIGN	7 EA		
0113	4430000000-N	1130	DRUMS	200 EA		
0114	4445000000-E	1145	BARRICADES (TYPE III)	220 LF		
0115	4455000000-N	1150	FLAGGER	160 DAY		
0116	4465000000-N	1160	TEMPORARY CRASH CUSHIONS	4 EA		
0117	4470000000-N	1160	RESET TEMPORARY CRASH CUSHION	6 EA		
0118	4480000000-N	1165	TMA	6 EA		
0119	4485000000-E	1170	PORTABLE CONCRETE BARRIER	2,000 LF		
0120	4490000000-E	1170	PORTABLE CONCRETE BARRIER (ANCHORED)	160 LF		
0121	4500000000-E	1170	RESET PORTABLE CONCRETE BAR-RIER	3,550 LF		
0122	4510000000-N	SP	LAW ENFORCEMENT	200 HR		
0123	4650000000-N	1251	TEMPORARY RAISED PAVEMENT MARKERS	250 EA		
0124	4685000000-E	1205	THERMOPLASTIC PAVEMENT MARKING LINES (4", 90 MILS)	16,312 LF		

County : Davidson

Line #	Item Number	Sec #	Description	Quantity	Unit Cost	Amount
0125	4686000000-E	1205	THERMOPLASTIC PAVEMENT MARKING LINES (4", 120 MILS)	6,563 LF		
0126	4695000000-E	1205	THERMOPLASTIC PAVEMENT MARKING LINES (8", 90 MILS)	2,119 LF		
0127	4697000000-E	1205	THERMOPLASTIC PAVEMENT MARKING LINES (8", 120 MILS)	1,479 LF		
0128	4710000000-E	1205	THERMOPLASTIC PAVEMENT MARKING LINES (24", 120 MILS)	605 LF		
0129	4725000000-E	1205	THERMOPLASTIC PAVEMENT MARKING SYMBOL (90 MILS)	73 EA		
0130	4770000000-E	1205	COLD APPLIED PLASTIC PAVEMENT MARKING LINES, TYPE ** (4") (II)	725 LF		
0131	4770000000-E	1205	COLD APPLIED PLASTIC PAVEMENT MARKING LINES, TYPE ** (4") (IV)	5,500 LF		
0132	4780000000-E	1205	COLD APPLIED PLASTIC PAVEMENT MARKING LINES, TYPE ** (8") (II)	184 LF		
0133	4805000000-N	1205	COLD APPLIED PLASTIC PAVEMENT MARKING SYMBOL, TYPE ** (II)	2 EA		
0134	4810000000-E	1205	PAINT PAVEMENT MARKING LINES (4")	134,000 LF		
0135	4820000000-E	1205	PAINT PAVEMENT MARKING LINES (8")	6,700 LF		
0136	4835000000-E	1205	PAINT PAVEMENT MARKING LINES (24")	1,220 LF		
0137	4845000000-N	1205	PAINT PAVEMENT MARKING SYMBOL	95 EA		
0138	4850000000-E	1205	REMOVAL OF PAVEMENT MARKING LINES (4")	3,100 LF		
0139	4870000000-E	1205	REMOVAL OF PAVEMENT MARKING LINES (24")	150 LF		
0140	4900000000-N	1251	PERMANENT RAISED PAVEMENT MARKERS	13 EA		

County : Davidson

Line #	Item Number	Sec #	Description	Quantity	Unit Cost	Amount
0141	4905000000-N	1253	SNOWPLOWABLE PAVEMENT MARKERS	122 EA		
0142	5155000000-E	1409	ELECTRICAL DUCT, TYPE BD, SIZE ***** (2", WITH MIN 240LB 2 PLY PULL LINE)	2,335 LF		
0143	5155000000-E	1409	ELECTRICAL DUCT, TYPE BD, SIZE ***** (4")	578 LF		
0144	5240000000-N	1411	ELECTRICAL JUNCTION BOXES ********** (PC 18)	18 EA		
0145	5325400000-E	1510	4" WATER LINE	40 LF		
0146	5325600000-E	1510	6" WATER LINE	603 LF		
0147	5326600000-E	1510	16" WATER LINE	38 LF		
0148	5540000000-E	1515	6" VALVE	4 EA		
0149	5648000000-N	1515	RELOCATE WATER METER	3 EA		
0150	5666000000-E	1515	FIRE HYDRANT	1 EA		
0151	5672000000-N	1515	RELOCATE FIRE HYDRANT	3 EA		
0152	5691300000-E	1520	8" SANITARY GRAVITY SEWER	1,060 LF		
0153	5775000000-E	1525	4' DIA UTILITY MANHOLE	10 EA		
0154	5776000000-E	1525	5' DIA UTILITY MANHOLE	1 EA		
0155	5781000000-E	1525	UTILITY MANHOLE WALL, 4' DIA	9.97 LF		
0156	5782000000-E	1525	UTILITY MANHOLE WALL, 5' DIA	2.57 LF		
0157	5800000000-E	1530	ABANDON 6" UTILITY PIPE	2,680 LF		
0158	5801000000-E	1530	ABANDON 8" UTILITY PIPE	3,344 LF		
0159	5810000000-E	1530	ABANDON 16" UTILITY PIPE	33 LF		

County : Davidson

Line #	Item Number	Sec #	Description	Quantity	Unit Cost	Amount
0160	5815000000-N	1530	REMOVE WATER METER	7 EA		
0161	5816000000-N	1530	ABANDON UTILITY MANHOLE	6 EA		
0162	5828000000-N	1530	REMOVE UTILITY MANHOLE	6 EA		
0163	6000000000-E	1605	TEMPORARY SILT FENCE	5,920 LF		
0164	6006000000-E	1610	STONE FOR EROSION CONTROL, CLASS A	390 TON		
0165	6009000000-E	1610	STONE FOR EROSION CONTROL, CLASS B	1,710 TON		
0166	6012000000-E	1610	SEDIMENT CONTROL STONE	1,550 TON		
0167	6015000000-E	1615	TEMPORARY MULCHING	31 ACR		
0168	6018000000-E	1620	SEED FOR TEMPORARY SEEDING	2,000 LB		
0169	6021000000-E	1620	FERTILIZER FOR TEMPORARY SEED-ING	11 TON		
0170	6024000000-E	1622	TEMPORARY SLOPE DRAINS	300 LF		
0171	6029000000-E	SP	SAFETY FENCE	200 LF		
0172	6030000000-E	1630	SILT EXCAVATION	1,810 CY		
0173	6036000000-E	1631	MATTING FOR EROSION CONTROL	25,000 SY		
0174	6037000000-E	SP	COIR FIBER MAT	100 SY		
0175	6038000000-E	SP	PERMANENT SOIL REINFORCEMENT MAT	850 SY		
0176	6042000000-E	1632	1/4" HARDWARE CLOTH	3,340 LF		
0177	6071012000-E	SP	COIR FIBER WATTLE	1,080 LF		
0178	6071020000-E	SP	POLYACRYLAMIDE (PAM)	520 LB		
0179	6071030000-E	1640	COIR FIBER BAFFLE	450 LF		

County : Davidson

Line #	Item Number	Sec #	Description	Quantity	Unit Cost	Amount
0180	6071050000-E	SP	**" SKIMMER (1-1/2")	1 EA		
0181	6084000000-E	1660	SEEDING & MULCHING	36 ACR		
0182	6087000000-E	1660	MOWING	17 ACR		
0183	6090000000-E	1661	SEED FOR REPAIR SEEDING	350 LB		
0184	6093000000-E	1661	FERTILIZER FOR REPAIR SEEDING	1 TON		
0185	6096000000-E	1662	SEED FOR SUPPLEMENTAL SEEDING	825 LB		
0186	6108000000-E	1665	FERTILIZER TOPDRESSING	24.5 TON		
0187	6114500000-N	1667	SPECIALIZED HAND MOWING	10 MHR		
0188	6117000000-N	SP	RESPONSE FOR EROSION CONTROL	25 EA		
0189	6132000000-N	SP	GENERIC EROSION CONTROL ITEM CONCRETE WASHOUT STRUCTURE	6 EA		
0190	7048500000-E	1705	PEDESTRIAN SIGNAL HEAD (16", 1 SECTION W/COUNTDOWN)	16 EA		
0191	7060000000-E	1705	SIGNAL CABLE	9,335 LF		
0192	7120000000-E	1705	VEHICLE SIGNAL HEAD (12", 3 SECTION)	35 EA		
0193	7132000000-E	1705	VEHICLE SIGNAL HEAD (12", 4 SECTION)	7 EA		
0194	7144000000-E	1705	VEHICLE SIGNAL HEAD (12", 5 SECTION)	7 EA		
0195	7264000000-E	1710	MESSENGER CABLE (3/8")	1,050 LF		
0196	7288000000-E	1715	PAVED TRENCHING (**********) (2, 2")	250 LF		
0197	7300000000-E	1715	UNPAVED TRENCHING (**********) (1, 2")	625 LF		

County : Davidson

Line #	Item Number	Sec #	Description	Quantity	Unit Cost	Amount
0198	7300000000-E	1715	UNPAVED TRENCHING (**********) (2, 2")	250 LF		
0199	7300100000-E	1715	UNPAVED TRENCHING FOR TEMP-ORARY LEAD-IN	710 LF		
0200	7301000000-E	1715	DIRECTIONAL DRILL (**********) (2, 2")	700 LF		
0201	7324000000-N	1716	JUNCTION BOX (STANDARD SIZE)	26 EA		
0202	7360000000-N	1720	WOOD POLE	8 EA		
0203	7372000000-N	1721	GUY ASSEMBLY	16 EA		
0204	7408000000-E	1722	1" RISER WITH WEATHERHEAD	2 EA		
0205	7420000000-E	1722	2" RISER WITH WEATHERHEAD	10 EA		
0206	7444000000-E	1725	INDUCTIVE LOOP SAWCUT	5,500 LF		
0207	7456000000-E	1726	LEAD-IN CABLE (**********) (14-2)	10,475 LF		
0208	7575142000-N	1736	900MHZ RADIO	2 EA		
0209	7575142060-N	SP	MODIFY RADIO INSTALLATION	3 EA		
0210	7588000000-N	SP	METAL POLE WITH SINGLE MAST ARM	8 EA		
0211	7613000000-N	SP	SOIL TEST	8 EA		
0212	7614100000-E	SP	DRILLED PIER FOUNDATION	48 CY		
0213	7631000000-N	SP	MAST ARM WITH METAL POLE DE-SIGN	8 EA		
0214	7636000000-N	1745	SIGN FOR SIGNALS	8 EA		
0215	7642100000-N	1743	TYPE I POST WITH FOUNDATION	2 EA		
0216	7642200000-N	1743	TYPE II PEDESTAL WITH FOUND-ATION	13 EA		

County : Davidson

Line #	Item Number	Sec #	Description	Quantity	Unit Cost	Amount
0217	7684000000-N	1750	SIGNAL CABINET FOUNDATION	3 EA		
0218	7756000000-N	1751	CONTROLLER WITH CABINET (TYPE 2070L, BASE MOUNTED)	3 EA		
0219	7780000000-N	1751	DETECTOR CARD (TYPE 2070L)	15 EA		
0220	7901000000-N	1753	CABINET BASE EXTENDER	3 EA		
0221	7960000000-N	SP	METAL POLE FOUNDATION REMOVAL	4 EA		
0222	7972000000-N	SP	METAL POLE REMOVAL	4 EA		
0223	7980000000-N	SP	GENERIC SIGNAL ITEM POWDER COAT FOR PUSHBUTTON POST (BLACK)	2 EA		
0224	7980000000-N	SP	GENERIC SIGNAL ITEM POWDER COAT FOR SIGNAL PED-ESTAL (BLACK)	13 EA		
0225	7980000000-N	SP	GENERIC SIGNAL ITEM POWDER COAT FOR SINGLE MAST ARM POLE (BLACK)	8 EA		
			WALL ITEMS			
0226	8801000000-E	SP	MSE RETAINING WALL NO **** (1)	3,180 SF		
0227	8801000000-E	SP	MSE RETAINING WALL NO **** (2)	3,130 SF		
0228	8847000000-E	SP	GENERIC RETAINING WALL ITEM SOUND BARRIER WALL	12,015 SF		
			STRUCTURE ITEMS			
0229	8021000000-N	SP	REMOVAL OF EXISTING STRUCTURE AT STATION ********** (13+41.72 -L-)	Lump Sum	L.S.	

County : Davidson

Line #	Item Number	Sec #	Description	Quantity	Unit Cost	Amount
0230	8091000000-N	410	FOUNDATION EXCAVATION FOR BENT ** AT STATION ********** (1, 13+41.72 -L-)	Lump Sum	L.S.	
0231	8112730000-N	450	PDA TESTING	1 EA		
0232	8147000000-E	420	REINFORCED CONCRETE DECK SLAB	14,788 SF		
0233	8161000000-E	420	GROOVING BRIDGE FLOORS	14,928 SF		
0234	8182000000-E	420	CLASS A CONCRETE (BRIDGE)	260.3 CY		
0235	8210000000-N	422	BRIDGE APPROACH SLABS, STATION ********** (13+41.72 -L-)	Lump Sum	L.S.	
0236	8217000000-E	425	REINFORCING STEEL (BRIDGE)	36,079 LB		
0237	8238000000-E	425	SPIRAL COLUMN REINFORCING STEEL (BRIDGE)	2,212 LB		
0238	8262000000-E	430	45" PRESTRESSED CONCRETE GIR-DERS	1,752 LF		
0239	8364000000-E	450	HP12X53 STEEL PILES	1,785 LF		
0240	8531000000-E	462	4" SLOPE PROTECTION	76 SY		
0241	8657000000-N	430	ELASTOMERIC BEARINGS	Lump Sum	L.S.	
0242	8706000000-N	SP	EXPANSION JOINT SEALS	Lump Sum	L.S.	
0243	8734000000-N	SP	ELECTRICAL CONDUIT SYSTEM AT STA********** (13+41.72 -L-)	Lump Sum	L.S.	
0244	8867000000-E	SP	GENERIC STRUCTURE ITEM CLASSIC CONC BRIDGE RAIL	306.3 LF		
0245	8892000000-E	SP	GENERIC STRUCTURE ITEM PATTERNED CONC SIDEWALK	1,972.92 SF		

Vendor 1 of 8: J. T. RUSSELL & SONS, INC. (3075)
Call Order 006 (Proposal: C203587)

Bid Information

Proposal County: DAVIDSON

Vendor Address: 1721 US Highway 52 North
Albemarle , NC , 28001

Signature Check: atlas_james_russell_3075

Time Bid Received: October 20, 2015 01:57 PM

Amendment Count: 0

Bid Checksum: CAA73D51

Bid Total: $10,164,621.36

Items Total: $10,164,621.36

Time Total: $0.00

Bidding Errors:

Item Warning : item 0000100000-N (Line# 0001) quantity

DBE Goal Set: 13.0%
DBE Goal Met.: 13.0%

Vendor 1 of 8: J. T. RUSSELL & SONS, INC. (3075)
Call Order 006 (Proposal: C203587)

Bid Bond Information

Projects:		**Bond Maximum:**	
Counties:		**State of Incorporation:**	
Bond ID:	SNC15313255	**Agency Execution Date:**	10/19/2015 12
Paid by Check:	No	**Surety Name:**	surety2000
Bond Percent:	5%	**Bond Agency Name:**	Fidelity And Deposit Company of Maryland

Bidder 1 of 8

Vendor 3075's Bid Information for Call 006, Letting L151020, 10/20/15

J.T. Russell and Sons Inc (3075)
Call Order 006 (Proposal ID C203587)

LIST OF DBE PARTICIPANTS

VENDOR NUMBER	DBE NAME / ADDRESS	WORK CODE	TYPE OF WORK	CERT TYPE	AMOUNT	
4898 WB	BULLINGTON CONSTRUCTION INC 417 FOXGLOVE LANE , INDIAN TRAIL, NC 28079			Sub	133,852.50	Committed
3080 WB	CURTIN TRUCKING & DRAINAGE, INC POST OFFICE BOX 38220 , CHARLOTTE, NC 282781003			Sub	128,235.00	Committed
3026 WB	KNOX CONTRACT SEEDING INC 550 KNOX ROAD , CLEVELAND, NC 27013			Sub	205,006.25	Committed
1875 WB	SKC, INC. POST OFFICE BOX 386 , SEAGROVE, NC 27203			Sub	258,725.00	Committed
4729 WB	THERESA'S CONCRETE SERVICE, INC PO BOX 1513 , SALISBURY, NC 28145			Sub	187,725.00	Committed
4761 WB	TRAFFIC CONTROL SAFETY SERVICES POST OFFICE BOX 24511 , WINSTON-SALEM, NC 27114			Sub	55,143.75	Committed
4880 WB	TRICOR CONSTRUCTION, INC. 625 POPLAR STREET , SPARTANBURG, SC 29302			Sub	383,792.50	Committed
				TOTAL:	$1,352,480.00 13.31%	

Vendor 3075's Bid Information for Call 006, Letting L151020, 10/20/15

J.T. Russell and Sons Inc (3075)
Call Order 006 (Proposal ID C203587)

Miscelleneous Data Info - Contractor Responses:
==========

NON-COLLUSION AND DEBARMENT CERTIFICATION

Explanation of the prospective bidder that is unable to certify to any of the statements in this certification:

Explanation:
NOT ANSWERED
NOT ANSWERED
NOT ANSWERED
NOT ANSWERED

AWARD LIMITS ON MULTIPLE PROJECTS

By answering YES to this statement, the bidder acknowleges that they are using the award limits on multiple projects. No

It is the desire of the Bidder to be awarded contracts, the value of which will not exceed a total of NOT ANSWERED for those projects indicated herein, for which bids will be opened on (MM/DD/YY)

The Award Limits shall apply to the following projects:

Contract Number	County
NOT ANSWERED	
NOT ANSWERED	

```
Bidder 1 of 8

      NOT ANSWERED
      NOT ANSWERED
      NOT ANSWERED
      NOT ANSWERED


Bid Bond Data Info - Contractor Responses:
==============================================

                BondID: SNC15313255
Surety Registry Agency: surety2000
             Verified?: Yes
         Surety Agency: Fidelity And Deposit Company of Maryland
   Bond Execution Date: 10/19/2015 12
           Bond Amount:     $508,231.07 (Five Percent of Bid)
```

Contract ID: C203587 Project(s): STPNHS-0052(31)
Letting Date: 10-20-15 Call Order: 006
Bidder: 3075 - J.T. Russell and Sons Inc

Section 0001 ROADWAY ITEMS

Alt Group

Line No.	Item Description	Approx. Quantity and Units	Unit Price Dollars	Unit Price Cts	Bid Amount Dollars	Bid Amount Ct
0001	0000100000-N MOBILIZATION	LUMP	LUMP		506,940.00	
0002	0000400000-N CONSTRUCTION SURVEYING	LUMP	LUMP		90,000.00	
0003	0043000000-N GRADING	LUMP	LUMP		1,238,000.00	
0004	0050000000-E SUPPLEMENTARY CLEARING & GRUB-BING	1.000 ACR	3,630.21000		3,630.21	
0005	0057000000-E UNDERCUT EXCAVATION	2,500.000 CY	12.47000		31,175.00	
0006	0141000000-E BERM DITCH CONSTRUCTION	410.000 LF	1.92000		787.20	
0007	0195000000-E SELECT GRANULAR MATERIAL	1,000.000 CY	35.00000		35,000.00	
0008	0196000000-E GEOTEXTILE FOR SOIL STABILIZA-TION	2,682.000 SY	1.37000		3,674.34	
0009	0199000000-E TEMPORARY SHORING	4,117.300 SF	39.98000		164,609.65	
0010	0255000000-E GENERIC GRADING ITEM HAULING & DISPOSAL OF PETRO- LEUM CONTAMINATED SOIL	100.000 TON	35.04000		3,504.00	

Contract ID: C203587 Project(s): STPNHS-0052(31)
Letting Date: 10-20-15 Call Order: 006
Bidder: 3075 - J.T. Russell and Sons Inc

Line No.	Item Description	Approx. Quantity and Units	Unit Price Dollars	Unit Price Cts	Bid Amount Dollars	Bid Amount Ct
0011	0318000000-E FOUNDATION CONDITIONING MATE- RIAL, MINOR STRUCTURES	1,067.000 TON	38.00	00	40,546.00	
0012	0320000000-E FOUNDATION CONDITIONING GEO- TEXTILE	2,760.000 SY	2.93	00	8,086.80	
0013	0343000000-E 15" SIDE DRAIN PIPE	44.000 LF	36.74	00	1,616.56	
0014	0360000000-E 12" RC PIPE CULVERTS, CLASS III	60.000 LF	30.40	00	1,824.00	
0015	0366000000-E 15" RC PIPE CULVERTS, CLASS III	724.000 LF	30.32	00	21,951.68	
0016	0372000000-E 18" RC PIPE CULVERTS, CLASS III	3,560.000 LF	39.42	00	140,335.20	
0017	0378000000-E 24" RC PIPE CULVERTS, CLASS III	428.000 LF	46.43	00	19,872.04	
0018	0384000000-E 30" RC PIPE CULVERTS, CLASS III	548.000 LF	56.78	00	31,115.44	
0019	0390000000-E 36" RC PIPE CULVERTS, CLASS III	1,544.000 LF	69.91	00	107,941.04	
0020	0396000000-E 42" RC PIPE CULVERTS, CLASS III	588.000 LF	98.33	00	57,818.04	
0021	0408000000-E 54" RC PIPE CULVERTS, CLASS III	32.000 LF	234.34	00	7,498.88	
0022	0448200000-E 15" RC PIPE CULVERTS, CLASS IV	24.000 LF	30.95	00	742.80	

Contract ID: C203587 Project(s): STPNHS-0052(31)
Letting Date: 10-20-15 Call Order: 006
Bidder: 3075 - J.T. Russell and Sons Inc

Line No.	Item Description	Approx. Quantity and Units	Unit Price Dollars	Unit Price Cts	Bid Amount Dollars	Bid Amount Ct
0023	0582000000-E 15" CS PIPE CULVERTS, 0.064" THICK	108.000 LF	49.25000		5,319.00	
0024	0588000000-E 18" CS PIPE CULVERTS, 0.064" THICK	100.000 LF	54.79000		5,479.00	
0025	0636000000-E **" CS PIPE ELBOWS, *****" THICK (15", 0.064")	4.000 EA	222.60000		890.40	
0026	0636000000-E **" CS PIPE ELBOWS, *****" THICK (18", 0.064")	4.000 EA	263.23000		1,052.92	
0027	0973100000-E **" WELDED STEEL PIPE, ****" THICK, GRADE B IN SOIL (18", 0.312")	140.000 LF	198.84000		27,837.60	
0028	0973100000-E **" WELDED STEEL PIPE, ****" THICK, GRADE B IN SOIL (36", 0.531")	156.000 LF	346.12000		53,994.72	
0029	0973100000-E **" WELDED STEEL PIPE, ****" THICK, GRADE B IN SOIL (42", 0.625")	176.000 LF	472.37000		83,137.12	
0030	0986000000-E GENERIC PIPE ITEM 56" X 40" ELLIPSE PIPE LINER	19.000 LF	671.69000		12,762.11	
0031	0987000000-E GENERIC PIPE ITEM 43" X 68" ELLIPSE RC PIPE CLASS III	40.000 LF	397.15000		15,886.00	
0032	0995000000-E PIPE REMOVAL	1,713.000 LF	10.16000		17,404.08	
0033	1099500000-E SHALLOW UNDERCUT	1,000.000 CY	5.34000		5,340.00	

Contract ID: C203587 Project(s): STPNHS-0052(31)
Letting Date: 10-20-15 Call Order: 006
Bidder: 3075 - J.T. Russell and Sons Inc

Line No.	Item Description	Approx. Quantity and Units	Unit Price Dollars	Unit Price Cts	Bid Amount Dollars	Bid Amount Ct
0034	1099700000-E CLASS IV SUBGRADE STABILIZA- TION	1,800.000 TON	35.18000		63,324.00	
0035	1121000000-E AGGREGATE BASE COURSE	1,340.000 TON	38.00000		50,920.00	
0036	1220000000-E INCIDENTAL STONE BASE	100.000 TON	45.00000		4,500.00	
0037	1275000000-E PRIME COAT	469.000 GAL	4.44000		2,082.36	
0038	1297000000-E MILLING ASPHALT PAVEMENT, ***"DEPTH (3")	12,850.000 SY	2.66000		34,181.00	
0039	1308000000-E MILLING ASPHALT PAVEMENT, ***"TO ******" (0" TO 3")	2,000.000 SY	4.57000		9,140.00	
0040	1489000000-E ASPHALT CONC BASE COURSE, TYPE B25.0B	6,600.000 TON	47.27000		311,982.00	
0041	1491000000-E ASPHALT CONC BASE COURSE, TYPE B25.0C	6,210.000 TON	47.59000		295,533.90	
0042	1498000000-E ASPHALT CONC INTERMEDIATE COURSE, TYPE I19.0B	3,765.000 TON	50.18000		188,927.70	
0043	1503000000-E ASPHALT CONC INTERMEDIATE COURSE, TYPE I19.0C	1,725.000 TON	50.82000		87,664.50	
0044	1519000000-E ASPHALT CONC SURFACE COURSE, TYPE S9.5B	4,280.000 TON	50.47000		216,011.60	
0045	1523000000-E ASPHALT CONC SURFACE COURSE, TYPE S9.5C	3,810.000 TON	46.89000		178,650.90	

Contract ID: C203587 Project(s): STPNHS-0052(31)
Letting Date: 10-20-15 Call Order: 006
Bidder: 3075 - J.T. Russell and Sons Inc

Line No.	Item Description	Approx. Quantity and Units	Unit Price Dollars	Unit Price Cts	Bid Amount Dollars	Bid Amount Ct
0046	1575000000-E ASPHALT BINDER FOR PLANT MIX	1,310.000 TON	575.15000		753,446.50	
0047	1693000000-E ASPHALT PLANT MIX, PAVEMENT REPAIR	609.000 TON	131.17000		79,882.53	
0048	2000000000-N RIGHT OF WAY MARKERS	43.000 EA	369.08000		15,870.44	
0049	2022000000-E SUBDRAIN EXCAVATION	134.400 CY	15.78000		2,120.83	
0050	2026000000-E GEOTEXTILE FOR SUBSURFACE DRAINS	600.000 SY	6.31000		3,786.00	
0051	2036000000-E SUBDRAIN COARSE AGGREGATE	100.800 CY	68.38000		6,892.70	
0052	2044000000-E 6" PERFORATED SUBDRAIN PIPE	600.000 LF	12.62000		7,572.00	
0053	2070000000-N SUBDRAIN PIPE OUTLET	2.000 EA	841.63000		1,683.26	
0054	2077000000-E 6" OUTLET PIPE	12.000 LF	15.78000		189.36	
0055	2209000000-E ENDWALLS	2.300 CY	1,169.36000		2,689.53	
0056	2253000000-E PIPE COLLARS	1.151 CY	2,190.76000		2,521.56	
0057	2275000000-E FLOWABLE FILL	542.000 CY	179.55000		97,316.10	

Contract ID: C203587 Project(s): STPNHS-0052(31)
Letting Date: 10-20-15 Call Order: 006
Bidder: 3075 - J.T. Russell and Sons Inc

Line No.	Item Description	Approx. Quantity and Units	Unit Price Dollars	Unit Price Cts	Bid Amount Dollars	Bid Amount Ct
0058	2286000000-N MASONRY DRAINAGE STRUCTURES	76.000 EA	1,964.66000		149,314.16	
0059	2297000000-E MASONRY DRAINAGE STRUCTURES	11.135 CY	1,183.37000		13,176.82	
0060	2308000000-E MASONRY DRAINAGE STRUCTURES	125.200 LF	271.54000		33,996.81	
0061	2364000000-N FRAME WITH TWO GRATES, STD 840.16	6.000 EA	482.04000		2,892.24	
0062	2364200000-N FRAME WITH TWO GRATES, STD 840.20	5.000 EA	474.97000		2,374.85	
0063	2365000000-N FRAME WITH TWO GRATES, STD 840.22	31.000 EA	451.11000		13,984.41	
0064	2367000000-N FRAME WITH TWO GRATES, STD 840.29	1.000 EA	501.66000		501.66	
0065	2374000000-N FRAME WITH GRATE & HOOD, STD 840.03, TYPE ** (E)	5.000 EA	574.13000		2,870.65	
0066	2374000000-N FRAME WITH GRATE & HOOD, STD 840.03, TYPE ** (F)	8.000 EA	546.50000		4,372.00	
0067	2374000000-N FRAME WITH GRATE & HOOD, STD 840.03, TYPE ** (G)	13.000 EA	567.89000		7,382.57	
0068	2396000000-N FRAME WITH COVER, STD 840.54	11.000 EA	387.12000		4,258.32	
0069	2451000000-N CONCRETE TRANSITIONAL SECTION FOR DROP INLET	5.000 EA	894.23000		4,471.15	

Contract ID: C203587 Project(s): STPNHS-0052(31)
Letting Date: 10-20-15 Call Order: 006
Bidder: 3075 - J.T. Russell and Sons Inc

Line No.	Item Description	Approx. Quantity and Units	Unit Price Dollars	Unit Price Cts	Bid Amount Dollars	Bid Amount Ct
0070	2549000000-E 2'-6" CONCRETE CURB & GUTTER	4,030.000 LF	23.14000		93,254.20	
0071	2605000000-N CONCRETE CURB RAMP	26.000 EA	1,262.44000		32,823.44	
0072	2619000000-E 4" CONCRETE PAVED DITCH	11.000 SY	68.38000		752.18	
0073	2655000000-E 5" MONOLITHIC CONCRETE ISLANDS(KEYED IN)	925.000 SY	71.54000		66,174.50	
0074	2724000000-E PRECAST REINFORCED CONCRETE BARRIER, SINGLE FACED	625.000 LF	103.10000		64,437.50	
0075	2738000000-E GENERIC PAVING ITEM 5' STAMPED CONCRETE SIDEWALK	1,050.000 SY	125.00000		131,250.00	
0076	2738000000-E GENERIC PAVING ITEM TEMPORARY SIDEWALK	400.000 SY	17.55000		7,020.00	
0077	2815000000-N ADJUSTMENT OF DROP INLETS	1.000 EA	619.88000		619.88	
0078	2845000000-N ADJUSTMENT OF METER BOXES OR VALVE BOXES	33.000 EA	643.56000		21,237.48	
0079	2860000000-N CONVERT EXISTING CATCH BASIN TO JUNCTION BOX	1.000 EA	1,322.84000		1,322.84	
0080	2905000000-N CONVERT EXISTING DROP INLET TOJUNCTION BOX	1.000 EA	1,322.84000		1,322.84	
0081	3030000000-E STEEL BM GUARDRAIL	6,225.000 LF	15.67000		97,545.75	

Contract ID: C203587 Project(s): STPNHS-0052(31)
Letting Date: 10-20-15 Call Order: 006
Bidder: 3075 - J.T. Russell and Sons Inc

Line No.	Item Description	Approx. Quantity and Units	Unit Price Dollars	Unit Price Cts	Bid Amount Dollars	Bid Amount Ct
0082	3105000000-N STEEL BM GUARDRAIL TERMINAL SECTIONS	8.000 EA	78.90000		631.20	
0083	3150000000-N ADDITIONAL GUARDRAIL POSTS	5.000 EA	31.56000		157.80	
0084	3165000000-N GUARDRAIL ANCHOR UNITS, TYPE ********** (350, TL-2)	2.000 EA	1,841.06000		3,682.12	
0085	3180000000-N GUARDRAIL ANCHOR UNITS, TYPE ********** (W-BEAM)	2.000 EA	1,578.05000		3,156.10	
0086	3195000000-N GUARDRAIL ANCHOR UNITS, TYPE AT-1	1.000 EA	473.42000		473.42	
0087	3215000000-N GUARDRAIL ANCHOR UNITS, TYPE III	4.000 EA	1,472.85000		5,891.40	
0088	3270000000-N GUARDRAIL ANCHOR UNITS, TYPE 350	7.000 EA	1,893.66000		13,255.62	
0089	3317000000-N GUARDRAIL ANCHOR UNITS, TYPE B-77	6.000 EA	1,472.85000		8,837.10	
0090	3360000000-E REMOVE EXISTING GUARDRAIL	6,800.000 LF	1.05000		7,140.00	
0091	3536000000-E CHAIN LINK FENCE, 48" FABRIC	4,050.000 LF	4.89000		19,804.50	
0092	3542000000-E METAL LINE POSTS FOR 48" CHAINLINK FENCE	346.000 EA	44.18000		15,286.28	
0093	3548000000-E METAL TERMINAL POSTS FOR 48" CHAIN LINK FENCE	59.000 EA	110.46000		6,517.14	

Contract ID: C203587 Project(s): STPNHS-0052(31)
Letting Date: 10-20-15 Call Order: 006
Bidder: 3075 - J.T. Russell and Sons Inc

Line No.	Item Description	Approx. Quantity and Units	Unit Price Dollars	Unit Price Cts	Bid Amount Dollars	Bid Amount Ct
0094	3628000000-E RIP RAP, CLASS I	15.000 TON	45.09000		676.35	
0095	3649000000-E RIP RAP, CLASS B	13.000 TON	47.32000		615.16	
0096	3656000000-E GEOTEXTILE FOR DRAINAGE	751.000 SY	2.21000		1,659.71	
0097	4048000000-E REINFORCED CONCRETE SIGN FOUN-DATIONS	13.000 CY	946.83000		12,308.79	
0098	4054000000-E PLAIN CONCRETE SIGN FOUNDA-TIONS	1.000 CY	1.05000		1.05	
0099	4060000000-E SUPPORTS, BREAKAWAY STEEL BEAM	3,711.000 LB	3.42000		12,691.62	
0100	4066000000-E SUPPORTS, SIMPLE STEEL BEAM	6,248.000 LB	3.16000		19,743.68	
0101	4072000000-E SUPPORTS, 3-LB STEEL U-CHANNEL	943.000 LF	5.26000		4,960.18	
0102	4096000000-N SIGN ERECTION, TYPE D	2.000 EA	89.42000		178.84	
0103	4102000000-N SIGN ERECTION, TYPE E	63.000 EA	68.38000		4,307.94	
0104	4108000000-N SIGN ERECTION, TYPE F	11.000 EA	84.16000		925.76	
0105	4110000000-N SIGN ERECTION, TYPE *** (GROUND MOUNTED) (A)	6.000 EA	394.51000		2,367.06	

Contract ID: C203587 Project(s): STPNHS-0052(31)
Letting Date: 10-20-15 Call Order: 006
Bidder: 3075 - J.T. Russell and Sons Inc

Line No.	Item Description	Approx. Quantity and Units	Unit Price Dollars	Unit Price Cts	Bid Amount Dollars	Bid Amount Ct
0106	4152000000-N DISPOSAL OF SIGN SYSTEM, STEELBEAM	9.000 EA	52.60000		473.40	
0107	4155000000-N DISPOSAL OF SIGN SYSTEM, U- CHANNEL	78.000 EA	1.05000		81.90	
0108	4400000000-E WORK ZONE SIGNS (STATIONARY)	1,050.000 SF	4.58000		4,809.00	
0109	4405000000-E WORK ZONE SIGNS (PORTABLE)	1,000.000 SF	6.00000		6,000.00	
0110	4410000000-E WORK ZONE SIGNS (BARRICADE MOUNTED)	200.000 SF	5.47000		1,094.00	
0111	4415000000-N FLASHING ARROW BOARD	4.000 EA	4,455.44000		17,821.76	
0112	4420000000-N PORTABLE CHANGEABLE MESSAGE SIGN	7.000 EA	11,881.16000		83,168.12	
0113	4430000000-N DRUMS	200.000 EA	50.85000		10,170.00	
0114	4445000000-E BARRICADES (TYPE III)	220.000 LF	18.94000		4,166.80	
0115	4455000000-N FLAGGER	160.000 DAY	229.66000		36,745.60	
0116	4465000000-N TEMPORARY CRASH CUSHIONS	4.000 EA	3,156.10000		12,624.40	
0117	4470000000-N RESET TEMPORARY CRASH CUSHION	6.000 EA	1,315.04000		7,890.24	

Contract ID: C203587 Project(s): STPNHS-0052(31)
Letting Date: 10-20-15 Call Order: 006
Bidder: 3075 - J.T. Russell and Sons Inc

Line No.	Item Description	Approx. Quantity and Units	Unit Price Dollars	Unit Price Cts	Bid Amount Dollars	Bid Amount Ct
0118	4480000000-N TMA	6.000 EA	11,146.63000		66,879.78	
0119	4485000000-E PORTABLE CONCRETE BARRIER	2,000.000 LF	16.83000		33,660.00	
0120	4490000000-E PORTABLE CONCRETE BARRIER (ANCHORED)	160.000 LF	29.46000		4,713.60	
0121	4500000000-E RESET PORTABLE CONCRETE BARRIER	3,550.000 LF	3.26000		11,573.00	
0122	4510000000-N LAW ENFORCEMENT	200.000 HR	29.70000		5,940.00	
0123	4650000000-N TEMPORARY RAISED PAVEMENT MARKERS	250.000 EA	7.36000		1,840.00	
0124	4685000000-E THERMOPLASTIC PAVEMENT MARKINGLINES (4", 90 MILS)	16,312.000 LF	0.86000		14,028.32	
0125	4686000000-E THERMOPLASTIC PAVEMENT MARKING LINES (4", 120 MILS)	6,563.000 LF	0.97000		6,366.11	
0126	4695000000-E THERMOPLASTIC PAVEMENT MARKINGLINES (8", 90 MILS)	2,119.000 LF	1.10000		2,330.90	
0127	4697000000-E THERMOPLASTIC PAVEMENT MARKINGLINES (8", 120 MILS)	1,479.000 LF	3.42000		5,058.18	
0128	4710000000-E THERMOPLASTIC PAVEMENT MARKINGLINES (24", 120 MILS)	605.000 LF	7.89000		4,773.45	
0129	4725000000-E THERMOPLASTIC PAVEMENT MARKINGSYMBOL (90 MILS)	73.000 EA	126.24000		9,215.52	

Contract ID: C203587 Project(s): STPNHS-0052(31)
Letting Date: 10-20-15 Call Order: 006
Bidder: 3075 - J.T. Russell and Sons Inc

Line No.	Item Description	Approx. Quantity and Units	Unit Price Dollars	Unit Price Cts	Bid Amount Dollars	Bid Amount Ct
0130	4770000000-E COLD APPLIED PLASTIC PAVEMENT MARKING LINES, TYPE ** (4") (II)	725.000 LF	4.21000		3,052.25	
0131	4770000000-E COLD APPLIED PLASTIC PAVEMENT MARKING LINES, TYPE ** (4") (IV)	5,500.000 LF	2.63000		14,465.00	
0132	4780000000-E COLD APPLIED PLASTIC PAVEMENT MARKING LINES, TYPE ** (8") (II)	184.000 LF	8.42000		1,549.28	
0133	4805000000-N COLD APPLIED PLASTIC PAVEMENT MARKING SYMBOL, TYPE ** (II)	2.000 EA	315.61000		631.22	
0134	4810000000-E PAINT PAVEMENT MARKING LINES (4")	134,000.000 LF	0.26000		34,840.00	
0135	4820000000-E PAINT PAVEMENT MARKING LINES (8")	6,700.000 LF	0.89000		5,963.00	
0136	4835000000-E PAINT PAVEMENT MARKING LINES (24")	1,220.000 LF	3.37000		4,111.40	
0137	4845000000-N PAINT PAVEMENT MARKING SYMBOL	95.000 EA	68.38000		6,496.10	
0138	4850000000-E REMOVAL OF PAVEMENT MARKING LINES (4")	3,100.000 LF	1.31000		4,061.00	
0139	4870000000-E REMOVAL OF PAVEMENT MARKING LINES (24")	150.000 LF	6.31000		946.50	
0140	4900000000-N PERMANENT RAISED PAVEMENT MARKERS	13.000 EA	36.82000		478.66	

Line No.	Item Description	Approx. Quantity and Units	Unit Price Dollars	Unit Price Cts	Bid Amount Dollars	Bid Amount Ct
0141	4905000000-N SNOWPLOWABLE PAVEMENT MARKERS	122.000 EA	31.56000		3,850.32	
0142	5155000000-E ELECTRICAL DUCT, TYPE BD, SIZE ***** (2", WITH MIN 240LB 2 PLY PULL LINE)	2,335.000 LF	5.05000		11,791.75	
0143	5155000000-E ELECTRICAL DUCT, TYPE BD, SIZE ***** (4")	578.000 LF	7.63000		4,410.14	
0144	5240000000-N ELECTRICAL JUNCTION BOXES ********** (PC 18)	18.000 EA	399.77000		7,195.86	
0145	5325400000-E 4" WATER LINE	40.000 LF	157.81000		6,312.40	
0146	5325600000-E 6" WATER LINE	603.000 LF	63.12000		38,061.36	
0147	5326600000-E 16" WATER LINE	38.000 LF	368.21000		13,991.98	
0148	5540000000-E 6" VALVE	4.000 EA	1,262.44000		5,049.76	
0149	5648000000-N RELOCATE WATER METER	3.000 EA	1,578.05000		4,734.15	
0150	5666000000-E FIRE HYDRANT	1.000 EA	5,260.17000		5,260.17	
0151	5672000000-N RELOCATE FIRE HYDRANT	3.000 EA	4,208.14000		12,624.42	

Contract ID: C203587 Project(s): STPNHS-0052(31)
Letting Date: 10-20-15 Call Order: 006
Bidder: 3075 - J.T. Russell and Sons Inc

Line No.	Item Description	Approx. Quantity and Units	Unit Price Dollars	Unit Price Cts	Bid Amount Dollars	Bid Amount Ct
0152	5691300000-E 8" SANITARY GRAVITY SEWER	1,060.000 LF	52.60000		55,756.00	
0153	5775000000-E 4' DIA UTILITY MANHOLE	10.000 EA	2,630.09000		26,300.90	
0154	5776000000-E 5' DIA UTILITY MANHOLE	1.000 EA	4,208.14000		4,208.14	
0155	5781000000-E UTILITY MANHOLE WALL, 4' DIA	9.970 LF	263.01000		2,622.21	
0156	5782000000-E UTILITY MANHOLE WALL, 5' DIA	2.570 LF	368.21000		946.30	
0157	5800000000-E ABANDON 6" UTILITY PIPE	2,680.000 LF	10.52000		28,193.60	
0158	5801000000-E ABANDON 8" UTILITY PIPE	3,344.000 LF	12.62000		42,201.28	
0159	5810000000-E ABANDON 16" UTILITY PIPE	33.000 LF	131.50000		4,339.50	
0160	5815000000-N REMOVE WATER METER	7.000 EA	526.02000		3,682.14	
0161	5816000000-N ABANDON UTILITY MANHOLE	6.000 EA	841.63000		5,049.78	
0162	5828000000-N REMOVE UTILITY MANHOLE	6.000 EA	1,262.44000		7,574.64	
0163	6000000000-E TEMPORARY SILT FENCE	5,920.000 LF	2.89000		17,108.80	

Contract ID: C203587 Project(s): STPNHS-0052(31)
Letting Date: 10-20-15 Call Order: 006
Bidder: 3075 - J.T. Russell and Sons Inc

Line No.	Item Description	Approx. Quantity and Units	Unit Price Dollars	Unit Price Cts	Bid Amount Dollars	Bid Amount Ct
0164	6006000000-E STONE FOR EROSION CONTROL, CLASS A	390.000 TON	47.32000		18,454.80	
0165	6009000000-E STONE FOR EROSION CONTROL, CLASS B	1,710.000 TON	45.86000		78,420.60	
0166	6012000000-E SEDIMENT CONTROL STONE	1,550.000 TON	44.29000		68,649.50	
0167	6015000000-E TEMPORARY MULCHING	31.000 ACR	973.13000		30,167.03	
0168	6018000000-E SEED FOR TEMPORARY SEEDING	2,000.000 LB	0.68000		1,360.00	
0169	6021000000-E FERTILIZER FOR TEMPORARY SEED-ING	11.000 TON	526.02000		5,786.22	
0170	6024000000-E TEMPORARY SLOPE DRAINS	300.000 LF	24.32000		7,296.00	
0171	6029000000-E SAFETY FENCE	200.000 LF	1.84000		368.00	
0172	6030000000-E SILT EXCAVATION	1,810.000 CY	11.35000		20,543.50	
0173	6036000000-E MATTING FOR EROSION CONTROL	25,000.000 SY	1.58000		39,500.00	
0174	6037000000-E COIR FIBER MAT	100.000 SY	7.36000		736.00	
0175	6038000000-E PERMANENT SOIL REINFORCEMENT MAT	850.000 SY	6.31000		5,363.50	

Contract ID: C203587 Project(s): STPNHS-0052(31)
Letting Date: 10-20-15 Call Order: 006
Bidder: 3075 - J.T. Russell and Sons Inc

Line No.	Item Description	Approx. Quantity and Units	Unit Price Dollars	Unit Price Cts	Bid Amount Dollars	Bid Amount Ct
0176	6042000000-E 1/4" HARDWARE CLOTH	3,340.000 LF	3.73000		12,458.20	
0177	6071012000-E COIR FIBER WATTLE	1,080.000 LF	9.21000		9,946.80	
0178	6071020000-E POLYACRYLAMIDE (PAM)	520.000 LB	13.15000		6,838.00	
0179	6071030000-E COIR FIBER BAFFLE	450.000 LF	9.99000		4,495.50	
0180	6071050000-E **" SKIMMER (1-1/2")	1.000 EA	1,304.70000		1,304.70	
0181	6084000000-E SEEDING & MULCHING	36.000 ACR	1,630.65000		58,703.40	
0182	6087000000-E MOWING	17.000 ACR	78.90000		1,341.30	
0183	6090000000-E SEED FOR REPAIR SEEDING	350.000 LB	3.42000		1,197.00	
0184	6093000000-E FERTILIZER FOR REPAIR SEEDING	1.000 TON	1,046.77000		1,046.77	
0185	6096000000-E SEED FOR SUPPLEMENTAL SEEDING	825.000 LB	3.42000		2,821.50	
0186	6108000000-E FERTILIZER TOPDRESSING	24.500 TON	710.12000		17,397.94	
0187	6114500000-N SPECIALIZED HAND MOWING	10.000 MHR	99.94000		999.40	

Line No.	Item Description	Approx. Quantity and Units	Unit Price Dollars	Unit Price Cts	Bid Amount Dollars	Bid Amount Ct
0188	6117000000-N RESPONSE FOR EROSION CONTROL	25.000 EA	263.01000		6,575.25	
0189	6132000000-N GENERIC EROSION CONTROL ITEM CONCRETE WASHOUT STRUCTURE	6.000 EA	1,578.05000		9,468.30	
0190	7048500000-E PEDESTRIAN SIGNAL HEAD (16", 1SECTION W/COUNTDOWN)	16.000 EA	878.45000		14,055.20	
0191	7060000000-E SIGNAL CABLE	9,335.000 LF	2.26000		21,097.10	
0192	7120000000-E VEHICLE SIGNAL HEAD (12", 3 SECTION)	35.000 EA	820.59000		28,720.65	
0193	7132000000-E VEHICLE SIGNAL HEAD (12", 4 SECTION)	7.000 EA	904.75000		6,333.25	
0194	7144000000-E VEHICLE SIGNAL HEAD (12", 5 SECTION)	7.000 EA	1,199.32000		8,395.24	
0195	7264000000-E MESSENGER CABLE (3/8")	1,050.000 LF	3.89000		4,084.50	
0196	7288000000-E PAVED TRENCHING (**********) (2, 2")	250.000 LF	16.62000		4,155.00	
0197	7300000000-E UNPAVED TRENCHING (**********) (1, 2")	625.000 LF	6.05000		3,781.25	
0198	7300000000-E UNPAVED TRENCHING (**********) (2, 2")	250.000 LF	7.68000		1,920.00	

Line No.	Item Description	Approx. Quantity and Units	Unit Price Dollars	Unit Price Cts	Bid Amount Dollars	Bid Amount Ct
0199	7300100000-E UNPAVED TRENCHING FOR TEMPORARY LEAD-IN	710.000 LF	2.89000		2,051.90	
0200	7301000000-E DIRECTIONAL DRILL (**********) (2, 2")	700.000 LF	16.62000		11,634.00	
0201	7324000000-N JUNCTION BOX (STANDARD SIZE)	26.000 EA	305.09000		7,932.34	
0202	7360000000-N WOOD POLE	8.000 EA	899.49000		7,195.92	
0203	7372000000-N GUY ASSEMBLY	16.000 EA	268.27000		4,292.32	
0204	7408000000-E 1" RISER WITH WEATHERHEAD	2.000 EA	599.66000		1,199.32	
0205	7420000000-E 2" RISER WITH WEATHERHEAD	10.000 EA	368.21000		3,682.10	
0206	7444000000-E INDUCTIVE LOOP SAWCUT	5,500.000 LF	6.31000		34,705.00	
0207	7456000000-E LEAD-IN CABLE (**********) (14-2)	10,475.000 LF	1.58000		16,550.50	
0208	7575142000-N 900MHZ RADIO	2.000 EA	3,508.53000		7,017.06	
0209	7575142060-N MODIFY RADIO INSTALLATION	3.000 EA	1,246.66000		3,739.98	
0210	7588000000-N METAL POLE WITH SINGLE MAST ARM	8.000 EA	12,624.41000		100,995.28	

Contract ID: C203587 Project(s): STPNHS-0052(31)
Letting Date: 10-20-15 Call Order: 006
Bidder: 3075 - J.T. Russell and Sons Inc

Line No.	Item Description	Approx. Quantity and Units	Unit Price Dollars	Unit Price Cts	Bid Amount Dollars	Bid Amount Ct
0211	7613000000-N SOIL TEST	8.000 EA	1,030.99000		8,247.92	
0212	7614100000-E DRILLED PIER FOUNDATION	48.000 CY	773.25000		37,116.00	
0213	7631000000-N MAST ARM WITH METAL POLE DE- SIGN	8.000 EA	252.49000		2,019.92	
0214	7636000000-N SIGN FOR SIGNALS	8.000 EA	194.63000		1,557.04	
0215	7642100000-N TYPE I POST WITH FOUNDATION	2.000 EA	1,020.47000		2,040.94	
0216	7642200000-N TYPE II PEDESTAL WITH FOUND- ATION	13.000 EA	904.75000		11,761.75	
0217	7684000000-N SIGNAL CABINET FOUNDATION	3.000 EA	973.13000		2,919.39	
0218	7756000000-N CONTROLLER WITH CABINET (TYPE 2070L, BASE MOUNTED)	3.000 EA	12,308.80000		36,926.40	
0219	7780000000-N DETECTOR CARD (TYPE 2070L)	15.000 EA	115.72000		1,735.80	
0220	7901000000-N CABINET BASE EXTENDER	3.000 EA	362.95000		1,088.85	
0221	7960000000-N METAL POLE FOUNDATION REMOVAL	4.000 EA	704.86000		2,819.44	
0222	7972000000-N METAL POLE REMOVAL	4.000 EA	273.53000		1,094.12	

Line No.	Item Description	Approx. Quantity and Units	Unit Price Dollars	Unit Price Cts	Bid Amount Dollars	Bid Amount Ct
0223	7980000000-N GENERIC SIGNAL ITEM POWDER COAT FOR PUSHBUTTON POST (BLACK)	2.000 EA	46.81000		93.62	
0224	7980000000-N GENERIC SIGNAL ITEM POWDER COAT FOR SIGNAL PED- ESTAL (BLACK)	13.000 EA	66.80000		868.40	
0225	7980000000-N GENERIC SIGNAL ITEM POWDER COAT FOR SINGLE MAST ARM POLE (BLACK)	8.000 EA	1,330.82000		10,646.56	
	Section 0001 Total				7,630,283.03	

Section 0003 WALL ITEMS

Alt Group

0226	8801000000-E MSE RETAINING WALL NO **** (1)	3,180.000 SF	60.75000		193,185.00	
0227	8801000000-E MSE RETAINING WALL NO **** (2)	3,130.000 SF	63.91000		200,038.30	
0228	8847000000-E GENERIC RETAINING WALL ITEM SOUND BARRIER WALL	12,015.000 SF	37.96000		456,089.40	
	Section 0003 Total				849,312.70	

Section 0004 STRUCTURE ITEMS

Alt Group

0229	8021000000-N REMOVAL OF EXISTING STRUCTURE AT STATION ********** (13+41.72 -L-)	LUMP	LUMP		105,203.45	

Line No.	Item Description	Approx. Quantity and Units	Unit Price Dollars	Unit Price Cts	Bid Amount Dollars	Bid Amount Ct
0230	8091000000-N FOUNDATION EXCAVATION FOR BENT** AT STATION ********** (1, 13+41.72 -L-)	LUMP	LUMP		10,520.34	
0231	8112730000-N PDA TESTING	1.000 EA	4,102.93000		4,102.93	
0232	8147000000-E REINFORCED CONCRETE DECK SLAB	14,788.000 SF	31.56000		466,709.28	
0233	8161000000-E GROOVING BRIDGE FLOORS	14,928.000 SF	0.68000		10,151.04	
0234	8182000000-E CLASS A CONCRETE (BRIDGE)	260.300 CY	789.03000		205,384.51	
0235	8210000000-N BRIDGE APPROACH SLABS, STATION********** (13+41.72 -L-)	LUMP	LUMP		73,642.41	
0236	8217000000-E REINFORCING STEEL (BRIDGE)	36,079.000 LB	1.31000		47,263.49	
0237	8238000000-E SPIRAL COLUMN REINFORCING STEEL (BRIDGE)	2,212.000 LB	3.16000		6,989.92	
0238	8262000000-E 45" PRESTRESSED CONCRETE GIR-DERS	1,752.000 LF	236.71000		414,715.92	
0239	8364000000-E HP12X53 STEEL PILES	1,785.000 LF	52.60000		93,891.00	
0240	8531000000-E 4" SLOPE PROTECTION	76.000 SY	152.54000		11,593.04	

Contract ID: C203587 Project(s): STPNHS-0052(31)
Letting Date: 10-20-15 Call Order: 006
Bidder: 3075 - J.T. Russell and Sons Inc

Line No.	Item Description	Approx. Quantity and Units	Unit Price Dollars	Unit Price Cts	Bid Amount Dollars	Bid Amount Ct
0241	8657000000-N ELASTOMERIC BEARINGS	LUMP	LUMP		14,938.89	
0242	8706000000-N EXPANSION JOINT SEALS	LUMP	LUMP		105,203.45	
0243	8734000000-N ELECTRICAL CONDUIT SYSTEM AT STA********** (13+41.72 -L-)	LUMP	LUMP		13,255.63	
0244	8867000000-E GENERIC STRUCTURE ITEM CLASSIC CONC BRIDGE RAIL	306.300 LF	226.19000		69,282.00	
0245	8892000000-E GENERIC STRUCTURE ITEM PATTERNED CONC SIDEWALK	1,972.920 SF	16.31000		32,178.33	
	Section 0004 Total				1,685,025.63	
	Bid Total				10,164,621.36	

NON-COLLUSION AND DEBARMENT CERTIFICATION

The bidder certifies that neither he, nor any official, agent or employee of the bidder has entered into any agreement, participated in any collusion, or otherwise taken any action which is in restraint of free competitive bidding in connection with this bid, and that the bidder intends to do the work with its own bonafide employees or subcontractors and is not bidding for the benefit of another contractor. In addition, submitting this electronic bid constitutes the bidder's certification of Status under penalty of perjury under the laws of the United States and in accordance with the Debarment Certification on file with the Department.

By submitting this bid, the bidder certifies to the best of his knowledge and belief that he and his principals:

a. Are not presently debarred, suspended, proposed for debarment, declared ineligible, or voluntarily excluded from covered transactions by any Federal department or agency;

b. Have not within a three-year period preceding this proposal been convicted of or had a civil judgment rendered against them for commission of fraud or a criminal offense in connection with obtaining, attempting to obtain, or performing a public (Federal, State or local) transaction or contract under a public transaction; violation of Federal or State antitrust statutes or commission of embezzlement, theft, forgery, bribery, falsification or destruction of records; making false statements; or receiving stolen property;

c. Are not presently indicted for or otherwise criminally or civilly charged by a governmental entity (Federal, State or local) with commission of any of the offenses enumerated in paragraph b. of this certification; and

d. Have not within a three-year period preceding this proposal had one or more public transactions (Federal, State or local) terminated for cause or default.

Where the prospective bidder is unable to certify to any of the statements in this certification, the bidder shall submit an explanation in the blanks provided herein. The explanation will not necessarily result in denial of participation in a contract.

Explanation:
NOT ANSWERED
NOT ANSWERED
NOT ANSWERED
NOT ANSWERED

If the prequalified bidder's status changes, he shall immediately submit a new fully executed non-collusion affidavit and debarment certification with an explanation of the change to the Contract Office prior to submitting the bid.

Failure to furnish a certification or an explanation will be grounds for rejection of a bid

AWARD LIMITS ON MULTIPLE PROJECTS

By answering YES to this statement, the bidder acknowleges that they are using the award limits on multiple projects. No

A bidder who desires to bid on more than one project on which bids are to be opened on the same date, and who also desires to avoid receiving an award of more projects than he is equipped to handle, may bid on any number of projects but may limit the total amount of work awarded to him on selected projects by completing the AWARD LIMITS ON MULTIPLE PROJECTS.

The Award Limits on Multiple Projects must be filled in on each project bid for which the Bidder desires protection.

It is the desire of the Bidder to be awarded contracts, the value of which

will not exceed a total of NOT ANSWERED for those

projects indicated herein, for which bids will be opened on (MM/DD/YY)

The Award Limits shall apply to the following projects:

Contract Number	County
NOT ANSWERED	
NOT ANSWERED	
NOT ANSWERED	
NOT ANSWERED	
NOT ANSWERED	
NOT ANSWERED	

It is agreed that if I am (we are) the low Bidder(s) on indicated projects, the total value of which is more than the above stipulated award limits, the Board of Transportation will award me (us) projects from among those indicated that have a total value not to exceed the award limit and will result in the lowest total bids to the Department of Transportation.

PROPOSAL: C203587
LETTING: L151020 CALL: 006
VENDOR: 3075 J.T. Russell and Sons Inc

LINE NO.	ITEM NO.	ITEM DESC.	UNIT TYPE	SUBCONTRACTOR QUANTITY	SUBCONTRACTOR UNIT PRICE	EXTENDED AMOUNT
DBE SUBCONTRACTOR: 4898 BULLINGTON CONSTRUCTION INC						
Will Use Quote: Yes						
0081	3030000000-E	STL BM GUARD	LF	6225.000	14.90000	92752.50
0082	3105000000-N	SBGR TERM SE	EA	8.000	75.00000	600.00
0083	3150000000-N	ADDIT GUARDR	EA	5.000	30.00000	150.00
0084	3165000000-N	GR ANCHOR TY	EA	2.000	1750.00000	3500.00
0085	3180000000-N	GR ANCHOR TY	EA	2.000	1500.00000	3000.00
0086	3195000000-N	GR ANCHOR TY	EA	1.000	450.00000	450.00
0087	3215000000-N	GR ANCHOR TY	EA	4.000	1400.00000	5600.00
0088	3270000000-N	GR ANCHOR TY	EA	7.000	1800.00000	12600.00
0089	3317000000-N	GR ANCHOR TY	EA	6.000	1400.00000	8400.00
0090	3360000000-E	REMOVE EXIST	LF	6800.000	1.00000	6800.00
		DBE COMMITMENT TOTAL FOR SUBCONTRACTOR:				133,852.50 Committed
		DBE COMMITMENT TOTAL FOR VENDOR (SubContractor)				133,852
DBE SUBCONTRACTOR: 3080 CURTIN TRUCKING & DRAINAGE, INC.						
Will Use Quote: Yes						
0074	2724000000-E	PC REINF BAR	LF	625.000	98.00000	61250.00
0116	4465000000-N	TEMPORARY CR	EA	4.000	3000.00000	12000.00
0117	4470000000-N	RESET CRASH	EA	6.000	1250.00000	7500.00
0119	4485000000-E	PORT CONC BA	LF	2000.000	16.00000	32000.00
0120	4490000000-E	PORT CONC BA	LF	160.000	28.00000	4480.00
0121	4500000000-E	RESET PORT C	LF	3550.000	3.10000	11005.00
		DBE COMMITMENT TOTAL FOR SUBCONTRACTOR:				128,235.00 Committed
		DBE COMMITMENT TOTAL FOR VENDOR (SubContractor)				128,235
DBE SUBCONTRACTOR: 3026 KNOX CONTRACT SEEDING INC						
Will Use Quote: Yes						
0163	6000000000-E	TEMPORARY SI	LF	5920.000	2.75000	16280.00
0171	6029000000-E	SAFETY FENCE	LF	200.000	1.75000	350.00
0173	6036000000-E	MATTING FOR	SY	25000.000	1.50000	37500.00
0174	6037000000-E	COIR FIBER M	SY	100.000	7.00000	700.00
0175	6038000000-E	PERM SOIL RE	SY	850.000	6.00000	5100.00
0177	6071012000-E	COIR FIBER W	LF	1080.000	8.75000	9450.00
0178	6071020000-E	POLYACRYLAMI	LB	520.000	12.50000	6500.00
0179	6071030000-E	COIR FIBER B	LF	450.000	9.50000	4275.00
0167	6015000000-E	TEMPORARY MU	ACR	31.000	925.00000	28675.00
0168	6018000000-E	SEED FOR TEM	LB	2000.000	0.65000	1300.00
0169	6021000000-E	FERT FOR TEM	TON	11.000	500.00000	5500.00
0181	6084000000-E	SEEDING AND	ACR	36.000	1550.00000	55800.00
0182	6087000000-E	MOWING	ACR	17.000	75.00000	1275.00
0183	6090000000-E	SEED FOR REP	LB	350.000	3.25000	1137.50

LINE NO.	ITEM NO.	ITEM DESC.	UNIT TYPE	SUBCONTRACTOR QUANTITY	SUBCONTRACTOR UNIT PRICE	EXTENDED AMOUNT
0184	6093000000-E	FERT FOR REP	TON	1.000	995.00000	995.00
0185	6096000000-E	SEED FOR SUP	LB	825.000	3.25000	2681.25
0186	6108000000-E	FERTILIZER T	TON	24.500	675.00000	16537.50
0187	6114500000-N	SPECIALIZED	MHR	10.000	95.00000	950.00
0219	7780000000-N	DETECTOR CAR	EA	15.000	250.00000	3750.00
0188	6117000000-N	RESPONSE FOR	EA	25.000	250.00000	6250.00

DBE COMMITMENT TOTAL FOR SUBCONTRACTOR: 205,006.25 Committed
DBE COMMITMENT TOTAL FOR VENDOR (SubContractor) 205,006

DBE SUBCONTRACTOR: 1875 SKC, INC.
Will Use Quote: Yes

0145	5325400000-E	4" WATER LIN	LF	40.000	150.00000	6000.00
0146	5325600000-E	6" WATER LIN	LF	603.000	60.00000	36180.00
0147	5326600000-E	16" WATER LI	LF	38.000	350.00000	13300.00
0148	5540000000-E	6" VALVE	EA	4.000	1200.00000	4800.00
0149	5648000000-N	RELOCATE WAT	EA	3.000	1500.00000	4500.00
0150	5666000000-E	FIRE HYDRANT	EA	1.000	5000.00000	5000.00
0151	5672000000-N	RELOCATE FIR	EA	3.000	4000.00000	12000.00
0152	5691300000-E	8" SANITARY	LF	1060.000	50.00000	53000.00
0153	5775000000-E	4' DIA UTILI	EA	10.000	2500.00000	25000.00
0154	5776000000-E	5' DIA UTILI	EA	1.000	4000.00000	4000.00
0155	5781000000-E	UTILITY MANH	LF	9.970	250.00000	2492.50
0156	5782000000-E	UTILITY MANH	LF	2.570	350.00000	899.50
0157	5800000000-E	ABANDON 6" U	LF	2680.000	10.00000	26800.00
0158	5801000000-E	ABANDON 8" U	LF	3344.000	12.00000	40128.00
0159	5810000000-E	ABANDON 16"	LF	33.000	125.00000	4125.00
0160	5815000000-N	REMOVE WATER	EA	7.000	500.00000	3500.00
0161	5816000000-N	ABANDON UTIL	EA	6.000	800.00000	4800.00
0162	5828000000-N	REMOVE UTILI	EA	6.000	1200.00000	7200.00
0001	0000100000-N	MOBILIZATION	LS	1.000	5000.00000	5000.00

DBE COMMITMENT TOTAL FOR SUBCONTRACTOR: 258,725.00 Committed
DBE COMMITMENT TOTAL FOR VENDOR (SubContractor) 258,725

DBE SUBCONTRACTOR: 4729 THERESA'S CONCRETE SERVICE, INC.
Will Use Quote: Yes

0069	2451000000-N	CONC TRANS S	EA	5.000	850.00000	4250.00
0070	2549000000-E	2'-6" CONC C	LF	4030.000	22.00000	88660.00
0071	2605000000-N	CONCRETE CUR	EA	26.000	1200.00000	31200.00
0072	2619000000-E	4" CONCRETE	SY	11.000	65.00000	715.00
0073	2655000000-E	5" MONO CONC	SY	925.000	68.00000	62900.00

DBE COMMITMENT TOTAL FOR SUBCONTRACTOR: 187,725.00 Committed
DBE COMMITMENT TOTAL FOR VENDOR (SubContractor) 187,725

DBE SUBCONTRACTOR: 4761 TRAFFIC CONTROL SAFETY SERVICES, INC.
Will Use Quote: Yes

LINE NO.	ITEM NO.	ITEM DESC.	UNIT TYPE	SUBCONTRACTOR QUANTITY	SUBCONTRACTOR UNIT PRICE	EXTENDED AMOUNT
0097	4048000000-E	REINF CONC F	CY	13.000	900.00000	11700.00
0098	4054000000-E	PLN CONC FOU	CY	1.000	1.00000	1.00
0099	4060000000-E	SUPPORT, BRE	LB	3711.000	3.25000	12060.75
0100	4066000000-E	SUPPORTS, SI	LB	6248.000	3.00000	18744.00
0101	4072000000-E	SUPPORT, 3-L	LF	943.000	5.00000	4715.00
0102	4096000000-N	SIGN ERECTIO	EA	2.000	85.00000	170.00
0103	4102000000-N	SIGN ERECTIO	EA	63.000	65.00000	4095.00
0104	4108000000-N	SIGN ERECTIO	EA	11.000	80.00000	880.00
0105	4110000000-N	SIGN ERECTIO	EA	6.000	375.00000	2250.00
0106	4152000000-N	DISPOSE SIGN	EA	9.000	50.00000	450.00
0107	4155000000-N	DISPOSE SIGN	EA	78.000	1.00000	78.00

DBE COMMITMENT TOTAL FOR SUBCONTRACTOR: 55,143.75 Committed
DBE COMMITMENT TOTAL FOR VENDOR (SubContractor) 55,143.

DBE SUBCONTRACTOR: 4880 TRICOR CONSTRUCTION, INC.
Will Use Quote: Yes

0226	8801000000-E	MSE RETAIN W	SF	3180.000	57.75000	183645.00
0227	8801000000-E	MSE RETAIN W	SF	3130.000	60.75000	190147.50
0001	0000100000-N	MOBILIZATION	LS	1.000	10000.00000	10000.00

DBE COMMITMENT TOTAL FOR SUBCONTRACTOR: 383,792.50 Committed
DBE COMMITMENT TOTAL FOR VENDOR (SubContractor) 383,792

TOTAL DBE COMMITMENT FOR VENDOR: Entered: 13.31% or 1352480.00
Required: 13.00% or 1321400.78
<GOAL MET>

THIS PROPOSAL CONTAINS THE FOLLOWING ERRORS/WARNINGS (IF ANY)

Item Warning : item 0000100000-N (Line# 0001) quantity overcommitted by DBE'

This Bid contains 0 amendment files

Electronic Bid Submission

By submitting this bid electronically, I hereby acknowledge that all requirements included in the hard copy proposal, addendum, amendments, plans, standard specifications, supplemental specifications and special provisions are part of the bid and contract. Further, I acknowledge that I have read, understand, accept, acknowledge and agree to comply with all statements in this electronic bid.

I Hereby certify that I have the authority to submit this bid.

Signature	Agency	Date

Contract Item Sheets For C203587

Line #	ItemNumber	Sec #	Description	Quantity Unit	Unit Bid Price	Amount Bid
			ROADWAY ITEMS			
0001	0000100000-N	800	MOBILIZATION	Lump Sum LS	506,940.00	506,940.00
0002	0000400000-N	801	CONSTRUCTION SURVEYING	Lump Sum LS	90,000.00	90,000.00
0003	0043000000-N	226	GRADING	Lump Sum LS	1,238,000.00	1,238,000.00
0004	0050000000-E	226	SUPPLEMENTARY CLEARING & GRUB-BING	1 ACR	3,630.21	3,630.21
0005	0057000000-E	226	UNDERCUT EXCAVATION	2,500 CY	12.47	31,175.00
0006	0141000000-E	240	BERM DITCH CONSTRUCTION	410 LF	1.92	787.20
0007	0195000000-E	265	SELECT GRANULAR MATERIAL	1,000 CY	35.00	35,000.00
0008	0196000000-E	270	GEOTEXTILE FOR SOIL STABILIZA-TION	2,682 SY	1.37	3,674.34
0009	0199000000-E	SP	TEMPORARY SHORING	4,117.3 SF	39.98	164,609.65
0010	0255000000-E	SP	GENERIC GRADING ITEM HAULING & DISPOSAL OF PETRO-LEUM CONTAMINATED SOIL	100 TON	35.04	3,504.00
0011	0318000000-E	300	FOUNDATION CONDITIONING MATE-RIAL, MINOR STRUCTURES	1,067 TON	38.00	40,546.00
0012	0320000000-E	300	FOUNDATION CONDITIONING GEO-TEXTILE	2,760 SY	2.93	8,086.80
0013	0343000000-E	310	15" SIDE DRAIN PIPE	44 LF	36.74	1,616.56
0014	0360000000-E	310	12" RC PIPE CULVERTS, CLASS III	60 LF	30.40	1,824.00
0015	0366000000-E	310	15" RC PIPE CULVERTS, CLASS III	724 LF	30.32	21,951.68
0016	0372000000-E	310	18" RC PIPE CULVERTS, CLASS III	3,560 LF	39.42	140,335.20
0017	0378000000-E	310	24" RC PIPE CULVERTS, CLASS III	428 LF	46.43	19,872.04
0018	0384000000-E	310	30" RC PIPE CULVERTS, CLASS III	548 LF	56.78	31,115.44

Contract Item Sheets For C203587

Line #	ItemNumber	Sec #	Description	Quantity Unit	Unit Bid Price	Amount Bid
0019	0390000000-E	310	36" RC PIPE CULVERTS, CLASS III	1,544 LF	69.91	107,941.04
0020	0396000000-E	310	42" RC PIPE CULVERTS, CLASS III	588 LF	98.33	57,818.04
0021	0408000000-E	310	54" RC PIPE CULVERTS, CLASS III	32 LF	234.34	7,498.88
0022	0448200000-E	310	15" RC PIPE CULVERTS, CLASS IV	24 LF	30.95	742.80
0023	0582000000-E	310	15" CS PIPE CULVERTS, 0.064" THICK	108 LF	49.25	5,319.00
0024	0588000000-E	310	18" CS PIPE CULVERTS, 0.064" THICK	100 LF	54.79	5,479.00
0025	0636000000-E	310	**" CS PIPE ELBOWS, *****" THICK (15", 0.064")	4 EA	222.60	890.40
0026	0636000000-E	310	**" CS PIPE ELBOWS, *****" THICK (18", 0.064")	4 EA	263.23	1,052.92
0027	0973100000-E	330	**" WELDED STEEL PIPE, ****" THICK, GRADE B IN SOIL (18", 0.312")	140 LF	198.84	27,837.60
0028	0973100000-E	330	**" WELDED STEEL PIPE, ****" THICK, GRADE B IN SOIL (36", 0.531")	156 LF	346.12	53,994.72
0029	0973100000-E	330	**" WELDED STEEL PIPE, ****" THICK, GRADE B IN SOIL (42", 0.625")	176 LF	472.37	83,137.12
0030	0986000000-E	SP	GENERIC PIPE ITEM 56" X 40" ELLIPSE PIPE LINER	19 LF	671.69	12,762.11
0031	0987000000-E	310	GENERIC PIPE ITEM 43" X 68" ELLIPSE RC PIPE CLASS III	40 LF	397.15	15,886.00
0032	0995000000-E	340	PIPE REMOVAL	1,713 LF	10.16	17,404.08
0033	1099500000-E	505	SHALLOW UNDERCUT	1,000 CY	5.34	5,340.00
0034	1099700000-E	505	CLASS IV SUBGRADE STABILIZA-TION	1,800 TON	35.18	63,324.00

Contract Item Sheets For C203587

Line #	ItemNumber	Sec #	Description	Quantity Unit	Unit Bid Price	Amount Bid
0035	1121000000-E	520	AGGREGATE BASE COURSE	1,340 TON	38.00	50,920.00
0036	1220000000-E	545	INCIDENTAL STONE BASE	100 TON	45.00	4,500.00
0037	1275000000-E	600	PRIME COAT	469 GAL	4.44	2,082.36
0038	1297000000-E	607	MILLING ASPHALT PAVEMENT, ***" DEPTH (3")	12,850 SY	2.66	34,181.00
0039	1308000000-E	607	MILLING ASPHALT PAVEMENT, ***" TO ******" (0" TO 3")	2,000 SY	4.57	9,140.00
0040	1489000000-E	610	ASPHALT CONC BASE COURSE, TYPE B25.0B	6,600 TON	47.27	311,982.00
0041	1491000000-E	610	ASPHALT CONC BASE COURSE, TYPE B25.0C	6,210 TON	47.59	295,533.90
0042	1498000000-E	610	ASPHALT CONC INTERMEDIATE COURSE, TYPE I19.0B	3,765 TON	50.18	188,927.70
0043	1503000000-E	610	ASPHALT CONC INTERMEDIATE COURSE, TYPE I19.0C	1,725 TON	50.82	87,664.50
0044	1519000000-E	610	ASPHALT CONC SURFACE COURSE, TYPE S9.5B	4,280 TON	50.47	216,011.60
0045	1523000000-E	610	ASPHALT CONC SURFACE COURSE, TYPE S9.5C	3,810 TON	46.89	178,650.90
0046	1575000000-E	620	ASPHALT BINDER FOR PLANT MIX	1,310 TON	575.15	753,446.50
0047	1693000000-E	654	ASPHALT PLANT MIX, PAVEMENT REPAIR	609 TON	131.17	79,882.53
0048	2000000000-N	806	RIGHT OF WAY MARKERS	43 EA	369.08	15,870.44
0049	2022000000-E	815	SUBDRAIN EXCAVATION	134.4 CY	15.78	2,120.83
0050	2026000000-E	815	GEOTEXTILE FOR SUBSURFACE DRAINS	600 SY	6.31	3,786.00
0051	2036000000-E	815	SUBDRAIN COARSE AGGREGATE	100.8 CY	68.38	6,892.70
0052	2044000000-E	815	6" PERFORATED SUBDRAIN PIPE	600 LF	12.62	7,572.00

Contract Item Sheets For C203587

Line #	ItemNumber	Sec #	Description	Quantity Unit	Unit Bid Price	Amount Bid
0053	2070000000-N	815	SUBDRAIN PIPE OUTLET	2 EA	841.63	1,683.26
0054	2077000000-E	815	6" OUTLET PIPE	12 LF	15.78	189.36
0055	2209000000-E	838	ENDWALLS	2.3 CY	1,169.36	2,689.53
0056	2253000000-E	840	PIPE COLLARS	1.151 CY	2,190.76	2,521.56
0057	2275000000-E	SP	FLOWABLE FILL	542 CY	179.55	97,316.10
0058	2286000000-N	840	MASONRY DRAINAGE STRUCTURES	76 EA	1,964.66	149,314.16
0059	2297000000-E	840	MASONRY DRAINAGE STRUCTURES	11.135 CY	1,183.37	13,176.82
0060	2308000000-E	840	MASONRY DRAINAGE STRUCTURES	125.2 LF	271.54	33,996.81
0061	2364000000-N	840	FRAME WITH TWO GRATES, STD 840.16	6 EA	482.04	2,892.24
0062	2364200000-N	840	FRAME WITH TWO GRATES, STD 840.20	5 EA	474.97	2,374.85
0063	2365000000-N	840	FRAME WITH TWO GRATES, STD 840.22	31 EA	451.11	13,984.41
0064	2367000000-N	840	FRAME WITH TWO GRATES, STD 840.29	1 EA	501.66	501.66
0065	2374000000-N	840	FRAME WITH GRATE & HOOD, STD 840.03, TYPE ** (E)	5 EA	574.13	2,870.65
0066	2374000000-N	840	FRAME WITH GRATE & HOOD, STD 840.03, TYPE ** (F)	8 EA	546.50	4,372.00
0067	2374000000-N	840	FRAME WITH GRATE & HOOD, STD 840.03, TYPE ** (G)	13 EA	567.89	7,382.57
0068	2396000000-N	840	FRAME WITH COVER, STD 840.54	11 EA	387.12	4,258.32
0069	2451000000-N	852	CONCRETE TRANSITIONAL SECTION FOR DROP INLET	5 EA	894.23	4,471.15
0070	2549000000-E	846	2'-6" CONCRETE CURB & GUTTER	4,030 LF	23.14	93,254.20

Contract Item Sheets For C203587

Line #	ItemNumber	Sec #	Description	Quantity Unit	Unit Bid Price	Amount Bid
0071	2605000000-N	848	CONCRETE CURB RAMP	26 EA	1,262.44	32,823.44
0072	2619000000-E	850	4" CONCRETE PAVED DITCH	11 SY	68.38	752.18
0073	2655000000-E	852	5" MONOLITHIC CONCRETE ISLANDS (KEYED IN)	925 SY	71.54	66,174.50
0074	2724000000-E	857	PRECAST REINFORCED CONCRETE BARRIER, SINGLE FACED	625 LF	103.10	64,437.50
0075	2738000000-E	SP	GENERIC PAVING ITEM 5' STAMPED CONCRETE SIDEWALK	1,050 SY	125.00	131,250.00
0076	2738000000-E	SP	GENERIC PAVING ITEM TEMPORARY SIDEWALK	400 SY	17.55	7,020.00
0077	2815000000-N	858	ADJUSTMENT OF DROP INLETS	1 EA	619.88	619.88
0078	2845000000-N	858	ADJUSTMENT OF METER BOXES OR VALVE BOXES	33 EA	643.56	21,237.48
0079	2860000000-N	859	CONVERT EXISTING CATCH BASIN TO JUNCTION BOX	1 EA	1,322.84	1,322.84
0080	2905000000-N	859	CONVERT EXISTING DROP INLET TO JUNCTION BOX	1 EA	1,322.84	1,322.84
0081	3030000000-E	862	STEEL BM GUARDRAIL	6,225 LF	15.67	97,545.75
0082	3105000000-N	862	STEEL BM GUARDRAIL TERMINAL SECTIONS	8 EA	78.90	631.20
0083	3150000000-N	862	ADDITIONAL GUARDRAIL POSTS	5 EA	31.56	157.80
0084	3165000000-N	SP	GUARDRAIL ANCHOR UNITS, TYPE ********** (350, TL-2)	2 EA	1,841.06	3,682.12
0085	3180000000-N	862	GUARDRAIL ANCHOR UNITS, TYPE ********** (W-BEAM)	2 EA	1,578.05	3,156.10
0086	3195000000-N	862	GUARDRAIL ANCHOR UNITS, TYPE AT-1	1 EA	473.42	473.42
0087	3215000000-N	862	GUARDRAIL ANCHOR UNITS, TYPE III	4 EA	1,472.85	5,891.40

Contract Item Sheets For C203587

Line #	ItemNumber	Sec #	Description	Quantity Unit	Unit Bid Price	Amount Bid
0088	3270000000-N	SP	GUARDRAIL ANCHOR UNITS, TYPE 350	7 EA	1,893.66	13,255.62
0089	3317000000-N	862	GUARDRAIL ANCHOR UNITS, TYPE B-77	6 EA	1,472.85	8,837.10
0090	3360000000-E	863	REMOVE EXISTING GUARDRAIL	6,800 LF	1.05	7,140.00
0091	3536000000-E	866	CHAIN LINK FENCE, 48" FABRIC	4,050 LF	4.89	19,804.50
0092	3542000000-E	866	METAL LINE POSTS FOR 48" CHAIN LINK FENCE	346 EA	44.18	15,286.28
0093	3548000000-E	866	METAL TERMINAL POSTS FOR 48" CHAIN LINK FENCE	59 EA	110.46	6,517.14
0094	3628000000-E	876	RIP RAP, CLASS I	15 TON	45.09	676.35
0095	3649000000-E	876	RIP RAP, CLASS B	13 TON	47.32	615.16
0096	3656000000-E	876	GEOTEXTILE FOR DRAINAGE	751 SY	2.21	1,659.71
0097	4048000000-E	902	REINFORCED CONCRETE SIGN FOUN-DATIONS	13 CY	946.83	12,308.79
0098	4054000000-E	902	PLAIN CONCRETE SIGN FOUNDA-TIONS	1 CY	1.05	1.05
0099	4060000000-E	903	SUPPORTS, BREAKAWAY STEEL BEAM	3,711 LB	3.42	12,691.62
0100	4066000000-E	903	SUPPORTS, SIMPLE STEEL BEAM	6,248 LB	3.16	19,743.68
0101	4072000000-E	903	SUPPORTS, 3-LB STEEL U-CHANNEL	943 LF	5.26	4,960.18
0102	4096000000-N	904	SIGN ERECTION, TYPE D	2 EA	89.42	178.84
0103	4102000000-N	904	SIGN ERECTION, TYPE E	63 EA	68.38	4,307.94
0104	4108000000-N	904	SIGN ERECTION, TYPE F	11 EA	84.16	925.76
0105	4110000000-N	904	SIGN ERECTION, TYPE *** (GROUND MOUNTED) (A)	6 EA	394.51	2,367.06
0106	4152000000-N	907	DISPOSAL OF SIGN SYSTEM, STEEL BEAM	9 EA	52.60	473.40

Contract Item Sheets For C203587

Line #	ItemNumber	Sec #	Description	Quantity Unit	Unit Bid Price	Amount Bid
0107	4155000000-N	907	DISPOSAL OF SIGN SYSTEM, U-CHANNEL	78 EA	1.05	81.90
0108	4400000000-E	1110	WORK ZONE SIGNS (STATIONARY)	1,050 SF	4.58	4,809.00
0109	4405000000-E	1110	WORK ZONE SIGNS (PORTABLE)	1,000 SF	6.00	6,000.00
0110	4410000000-E	1110	WORK ZONE SIGNS (BARRICADE MOUNTED)	200 SF	5.47	1,094.00
0111	4415000000-N	1115	FLASHING ARROW BOARD	4 EA	4,455.44	17,821.76
0112	4420000000-N	1120	PORTABLE CHANGEABLE MESSAGE SIGN	7 EA	11,881.16	83,168.12
0113	4430000000-N	1130	DRUMS	200 EA	50.85	10,170.00
0114	4445000000-E	1145	BARRICADES (TYPE III)	220 LF	18.94	4,166.80
0115	4455000000-N	1150	FLAGGER	160 DAY	229.66	36,745.60
0116	4465000000-N	1160	TEMPORARY CRASH CUSHIONS	4 EA	3,156.10	12,624.40
0117	4470000000-N	1160	RESET TEMPORARY CRASH CUSHION	6 EA	1,315.04	7,890.24
0118	4480000000-N	1165	TMA	6 EA	11,146.63	66,879.78
0119	4485000000-E	1170	PORTABLE CONCRETE BARRIER	2,000 LF	16.83	33,660.00
0120	4490000000-E	1170	PORTABLE CONCRETE BARRIER (ANCHORED)	160 LF	29.46	4,713.60
0121	4500000000-E	1170	RESET PORTABLE CONCRETE BAR-RIER	3,550 LF	3.26	11,573.00
0122	4510000000-N	SP	LAW ENFORCEMENT	200 HR	29.70	5,940.00
0123	4650000000-N	1251	TEMPORARY RAISED PAVEMENT MARKERS	250 EA	7.36	1,840.00
0124	4685000000-E	1205	THERMOPLASTIC PAVEMENT MARKING LINES (4", 90 MILS)	16,312 LF	0.86	14,028.32
0125	4686000000-E	1205	THERMOPLASTIC PAVEMENT MARKING LINES (4", 120 MILS)	6,563 LF	0.97	6,366.11

Contract Item Sheets For C203587

Line #	ItemNumber	Sec #	Description	Quantity Unit	Unit Bid Price	Amount Bid
0126	4695000000-E	1205	THERMOPLASTIC PAVEMENT MARKING LINES (8", 90 MILS)	2,119 LF	1.10	2,330.90
0127	4697000000-E	1205	THERMOPLASTIC PAVEMENT MARKING LINES (8", 120 MILS)	1,479 LF	3.42	5,058.18
0128	4710000000-E	1205	THERMOPLASTIC PAVEMENT MARKING LINES (24", 120 MILS)	605 LF	7.89	4,773.45
0129	4725000000-E	1205	THERMOPLASTIC PAVEMENT MARKING SYMBOL (90 MILS)	73 EA	126.24	9,215.52
0130	4770000000-E	1205	COLD APPLIED PLASTIC PAVEMENT MARKING LINES, TYPE ** (4") (II)	725 LF	4.21	3,052.25
0131	4770000000-E	1205	COLD APPLIED PLASTIC PAVEMENT MARKING LINES, TYPE ** (4") (IV)	5,500 LF	2.63	14,465.00
0132	4780000000-E	1205	COLD APPLIED PLASTIC PAVEMENT MARKING LINES, TYPE ** (8") (II)	184 LF	8.42	1,549.28
0133	4805000000-N	1205	COLD APPLIED PLASTIC PAVEMENT MARKING SYMBOL, TYPE ** (II)	2 EA	315.61	631.22
0134	4810000000-E	1205	PAINT PAVEMENT MARKING LINES (4")	134,000 LF	0.26	34,840.00
0135	4820000000-E	1205	PAINT PAVEMENT MARKING LINES (8")	6,700 LF	0.89	5,963.00
0136	4835000000-E	1205	PAINT PAVEMENT MARKING LINES (24")	1,220 LF	3.37	4,111.40
0137	4845000000-N	1205	PAINT PAVEMENT MARKING SYMBOL	95 EA	68.38	6,496.10
0138	4850000000-E	1205	REMOVAL OF PAVEMENT MARKING LINES (4")	3,100 LF	1.31	4,061.00
0139	4870000000-E	1205	REMOVAL OF PAVEMENT MARKING LINES (24")	150 LF	6.31	946.50
0140	4900000000-N	1251	PERMANENT RAISED PAVEMENT MARKERS	13 EA	36.82	478.66
0141	4905000000-N	1253	SNOWPLOWABLE PAVEMENT MARKERS	122 EA	31.56	3,850.32

Contract Item Sheets For C203587

Line #	ItemNumber	Sec #	Description	Quantity Unit	Unit Bid Price	Amount Bid
0142	5155000000-E	1409	ELECTRICAL DUCT, TYPE BD, SIZE ***** (2", WITH MIN 240LB 2 PLY PULL LINE)	2,335 LF	5.05	11,791.75
0143	5155000000-E	1409	ELECTRICAL DUCT, TYPE BD, SIZE ***** (4")	578 LF	7.63	4,410.14
0144	5240000000-N	1411	ELECTRICAL JUNCTION BOXES ********** (PC 18)	18 EA	399.77	7,195.86
0145	5325400000-E	1510	4" WATER LINE	40 LF	157.81	6,312.40
0146	5325600000-E	1510	6" WATER LINE	603 LF	63.12	38,061.36
0147	5326600000-E	1510	16" WATER LINE	38 LF	368.21	13,991.98
0148	5540000000-E	1515	6" VALVE	4 EA	1,262.44	5,049.76
0149	5648000000-N	1515	RELOCATE WATER METER	3 EA	1,578.05	4,734.15
0150	5666000000-E	1515	FIRE HYDRANT	1 EA	5,260.17	5,260.17
0151	5672000000-N	1515	RELOCATE FIRE HYDRANT	3 EA	4,208.14	12,624.42
0152	5691300000-E	1520	8" SANITARY GRAVITY SEWER	1,060 LF	52.60	55,756.00
0153	5775000000-E	1525	4' DIA UTILITY MANHOLE	10 EA	2,630.09	26,300.90
0154	5776000000-E	1525	5' DIA UTILITY MANHOLE	1 EA	4,208.14	4,208.14
0155	5781000000-E	1525	UTILITY MANHOLE WALL, 4' DIA	9.97 LF	263.01	2,622.21
0156	5782000000-E	1525	UTILITY MANHOLE WALL, 5' DIA	2.57 LF	368.21	946.30
0157	5800000000-E	1530	ABANDON 6" UTILITY PIPE	2,680 LF	10.52	28,193.60
0158	5801000000-E	1530	ABANDON 8" UTILITY PIPE	3,344 LF	12.62	42,201.28
0159	5810000000-E	1530	ABANDON 16" UTILITY PIPE	33 LF	131.50	4,339.50
0160	5815000000-N	1530	REMOVE WATER METER	7 EA	526.02	3,682.14

Contract Item Sheets For C203587

Line #	ItemNumber	Sec #	Description	Quantity Unit	Unit Bid Price	Amount Bid
0161	5816000000-N	1530	ABANDON UTILITY MANHOLE	6 EA	841.63	5,049.78
0162	5828000000-N	1530	REMOVE UTILITY MANHOLE	6 EA	1,262.44	7,574.64
0163	6000000000-E	1605	TEMPORARY SILT FENCE	5,920 LF	2.89	17,108.80
0164	6006000000-E	1610	STONE FOR EROSION CONTROL, CLASS A	390 TON	47.32	18,454.80
0165	6009000000-E	1610	STONE FOR EROSION CONTROL, CLASS B	1,710 TON	45.86	78,420.60
0166	6012000000-E	1610	SEDIMENT CONTROL STONE	1,550 TON	44.29	68,649.50
0167	6015000000-E	1615	TEMPORARY MULCHING	31 ACR	973.13	30,167.03
0168	6018000000-E	1620	SEED FOR TEMPORARY SEEDING	2,000 LB	0.68	1,360.00
0169	6021000000-E	1620	FERTILIZER FOR TEMPORARY SEED-ING	11 TON	526.02	5,786.22
0170	6024000000-E	1622	TEMPORARY SLOPE DRAINS	300 LF	24.32	7,296.00
0171	6029000000-E	SP	SAFETY FENCE	200 LF	1.84	368.00
0172	6030000000-E	1630	SILT EXCAVATION	1,810 CY	11.35	20,543.50
0173	6036000000-E	1631	MATTING FOR EROSION CONTROL	25,000 SY	1.58	39,500.00
0174	6037000000-E	SP	COIR FIBER MAT	100 SY	7.36	736.00
0175	6038000000-E	SP	PERMANENT SOIL REINFORCEMENT MAT	850 SY	6.31	5,363.50
0176	6042000000-E	1632	1/4" HARDWARE CLOTH	3,340 LF	3.73	12,458.20
0177	6071012000-E	SP	COIR FIBER WATTLE	1,080 LF	9.21	9,946.80
0178	6071020000-E	SP	POLYACRYLAMIDE (PAM)	520 LB	13.15	6,838.00
0179	6071030000-E	1640	COIR FIBER BAFFLE	450 LF	9.99	4,495.50
0180	6071050000-E	SP	**" SKIMMER (1-1/2")	1 EA	1,304.70	1,304.70

Contract Item Sheets For C203587

Line #	ItemNumber	Sec #	Description	Quantity Unit	Unit Bid Price	Amount Bid
0181	6084000000-E	1660	SEEDING & MULCHING	36 ACR	1,630.65	58,703.40
0182	6087000000-E	1660	MOWING	17 ACR	78.90	1,341.30
0183	6090000000-E	1661	SEED FOR REPAIR SEEDING	350 LB	3.42	1,197.00
0184	6093000000-E	1661	FERTILIZER FOR REPAIR SEEDING	1 TON	1,046.77	1,046.77
0185	6096000000-E	1662	SEED FOR SUPPLEMENTAL SEEDING	825 LB	3.42	2,821.50
0186	6108000000-E	1665	FERTILIZER TOPDRESSING	24.5 TON	710.12	17,397.94
0187	6114500000-N	1667	SPECIALIZED HAND MOWING	10 MHR	99.94	999.40
0188	6117000000-N	SP	RESPONSE FOR EROSION CONTROL	25 EA	263.01	6,575.25
0189	6132000000-N	SP	GENERIC EROSION CONTROL ITEM CONCRETE WASHOUT STRUCTURE	6 EA	1,578.05	9,468.30
0190	7048500000-E	1705	PEDESTRIAN SIGNAL HEAD (16", 1 SECTION W/COUNTDOWN)	16 EA	878.45	14,055.20
0191	7060000000-E	1705	SIGNAL CABLE	9,335 LF	2.26	21,097.10
0192	7120000000-E	1705	VEHICLE SIGNAL HEAD (12", 3 SECTION)	35 EA	820.59	28,720.65
0193	7132000000-E	1705	VEHICLE SIGNAL HEAD (12", 4 SECTION)	7 EA	904.75	6,333.25
0194	7144000000-E	1705	VEHICLE SIGNAL HEAD (12", 5 SECTION)	7 EA	1,199.32	8,395.24
0195	7264000000-E	1710	MESSENGER CABLE (3/8")	1,050 LF	3.89	4,084.50
0196	7288000000-E	1715	PAVED TRENCHING (**********) (2, 2")	250 LF	16.62	4,155.00
0197	7300000000-E	1715	UNPAVED TRENCHING (**********) (1, 2")	625 LF	6.05	3,781.25
0198	7300000000-E	1715	UNPAVED TRENCHING (**********) (2, 2")	250 LF	7.68	1,920.00
0199	7300100000-E	1715	UNPAVED TRENCHING FOR TEMP-ORARY LEAD-IN	710 LF	2.89	2,051.90

Contract Item Sheets For C203587

Line #	ItemNumber	Sec #	Description	Quantity Unit	Unit Bid Price	Amount Bid
0200	7301000000-E	1715	DIRECTIONAL DRILL (**********) (2, 2")	700 LF	16.62	11,634.00
0201	7324000000-N	1716	JUNCTION BOX (STANDARD SIZE)	26 EA	305.09	7,932.34
0202	7360000000-N	1720	WOOD POLE	8 EA	899.49	7,195.92
0203	7372000000-N	1721	GUY ASSEMBLY	16 EA	268.27	4,292.32
0204	7408000000-E	1722	1" RISER WITH WEATHERHEAD	2 EA	599.66	1,199.32
0205	7420000000-E	1722	2" RISER WITH WEATHERHEAD	10 EA	368.21	3,682.10
0206	7444000000-E	1725	INDUCTIVE LOOP SAWCUT	5,500 LF	6.31	34,705.00
0207	7456000000-E	1726	LEAD-IN CABLE (**********) (14-2)	10,475 LF	1.58	16,550.50
0208	7575142000-N	1736	900MHZ RADIO	2 EA	3,508.53	7,017.06
0209	7575142060-N	SP	MODIFY RADIO INSTALLATION	3 EA	1,246.66	3,739.98
0210	7588000000-N	SP	METAL POLE WITH SINGLE MAST ARM	8 EA	12,624.41	100,995.28
0211	7613000000-N	SP	SOIL TEST	8 EA	1,030.99	8,247.92
0212	7614100000-E	SP	DRILLED PIER FOUNDATION	48 CY	773.25	37,116.00
0213	7631000000-N	SP	MAST ARM WITH METAL POLE DE-SIGN	8 EA	252.49	2,019.92
0214	7636000000-N	1745	SIGN FOR SIGNALS	8 EA	194.63	1,557.04
0215	7642100000-N	1743	TYPE I POST WITH FOUNDATION	2 EA	1,020.47	2,040.94
0216	7642200000-N	1743	TYPE II PEDESTAL WITH FOUND-ATION	13 EA	904.75	11,761.75
0217	7684000000-N	1750	SIGNAL CABINET FOUNDATION	3 EA	973.13	2,919.39
0218	7756000000-N	1751	CONTROLLER WITH CABINET (TYPE 2070L, BASE MOUNTED)	3 EA	12,308.80	36,926.40

Contract Item Sheets For C203587

Line #	ItemNumber	Sec #	Description	Quantity Unit	Unit Bid Price	Amount Bid
0219	7780000000-N	1751	DETECTOR CARD (TYPE 2070L)	15 EA	115.72	1,735.80
0220	7901000000-N	1753	CABINET BASE EXTENDER	3 EA	362.95	1,088.85
0221	7960000000-N	SP	METAL POLE FOUNDATION REMOVAL	4 EA	704.86	2,819.44
0222	7972000000-N	SP	METAL POLE REMOVAL	4 EA	273.53	1,094.12
0223	7980000000-N	SP	GENERIC SIGNAL ITEM POWDER COAT FOR PUSHBUTTON POST (BLACK)	2 EA	46.81	93.62
0224	7980000000-N	SP	GENERIC SIGNAL ITEM POWDER COAT FOR SIGNAL PED-ESTAL (BLACK)	13 EA	66.80	868.40
0225	7980000000-N	SP	GENERIC SIGNAL ITEM POWDER COAT FOR SINGLE MAST ARM POLE (BLACK)	8 EA	1,330.82	10,646.56

Contract Item Sheets For C203587

Line #	ItemNumber	Sec #	Description	Quantity Unit	Unit Bid Price	Amount Bid
0226	8801000000-E	SP	MSE RETAINING WALL NO **** (1)	3,180 SF	60.75	193,185.00
0227	8801000000-E	SP	MSE RETAINING WALL NO **** (2)	3,130 SF	63.91	200,038.30
0228	8847000000-E	SP	GENERIC RETAINING WALL ITEM SOUND BARRIER WALL	12,015 SF	37.96	456,089.40

Contract Item Sheets For C203587

Line #	ItemNumber	Sec #	Description	Quantity Unit	Unit Bid Price	Amount Bid
0229	8021000000-N	SP	REMOVAL OF EXISTING STRUCTURE AT STATION ********** (13+41.72 -L-)	Lump Sum LS	105,203.45	105,203.45
0230	8091000000-N	410	FOUNDATION EXCAVATION FOR BENT ** AT STATION ********** (1, 13+41.72 -L-)	Lump Sum LS	10,520.34	10,520.34
0231	8112730000-N	450	PDA TESTING	1 EA	4,102.93	4,102.93
0232	8147000000-E	420	REINFORCED CONCRETE DECK SLAB	14,788 SF	31.56	466,709.28
0233	8161000000-E	420	GROOVING BRIDGE FLOORS	14,928 SF	0.68	10,151.04
0234	8182000000-E	420	CLASS A CONCRETE (BRIDGE)	260.3 CY	789.03	205,384.51
0235	8210000000-N	422	BRIDGE APPROACH SLABS, STATION ********** (13+41.72 -L-)	Lump Sum LS	73,642.41	73,642.41
0236	8217000000-E	425	REINFORCING STEEL (BRIDGE)	36,079 LB	1.31	47,263.49
0237	8238000000-E	425	SPIRAL COLUMN REINFORCING STEEL (BRIDGE)	2,212 LB	3.16	6,989.92
0238	8262000000-E	430	45" PRESTRESSED CONCRETE GIR-DERS	1,752 LF	236.71	414,715.92
0239	8364000000-E	450	HP12X53 STEEL PILES	1,785 LF	52.60	93,891.00
0240	8531000000-E	462	4" SLOPE PROTECTION	76 SY	152.54	11,593.04
0241	8657000000-N	430	ELASTOMERIC BEARINGS	Lump Sum LS	14,938.89	14,938.89
0242	8706000000-N	SP	EXPANSION JOINT SEALS	Lump Sum LS	105,203.45	105,203.45
0243	8734000000-N	SP	ELECTRICAL CONDUIT SYSTEM AT STA********** (13+41.72 -L-)	Lump Sum LS	13,255.63	13,255.63
0244	8867000000-E	SP	GENERIC STRUCTURE ITEM CLASSIC CONC BRIDGE RAIL	306.3 LF	226.19	69,282.00

Contract Item Sheets For C203587

Line #	ItemNumber	Sec #	Description	Quantity Unit	Unit Bid Price	Amount Bid
0245	8892000000-E	SP	GENERIC STRUCTURE ITEM PATTERNED CONC SIDEWALK	1,972.92 SF	16.31	32,178.33

TOTAL AMOUNT OF BID FOR ENTIRE PROJECT **$10,164,621.36**

0838/Nov03/Q478324.846/D1090846926060/E245

Contract No. C203587

County Davidson

Rev. 5-19-11

EXECUTION OF CONTRACT
NON-COLLUSION AFFIDAVIT, DEBARMENT CERTIFICATION AND GIFT BAN CERTIFICATION

CORPORATION

The Contractor being duly sworn, solemnly swears (or affirms) that neither he, nor any official, agent or employee has entered into any agreement, participated in any collusion, or otherwise taken any action which is in restraint of free competitive bidding in connection with this Contract, that the Contractor has not been convicted of violating *N.C.G.S. § 133-24* within the last three years, and that the Contractor intends to do the work with its own bonafide employees or subcontractors and did not bid for the benefit of another contractor.

By submitting this Execution of Contract, Non-Collusion Affidavit and Debarment Certification, the Contractor is certifying his status under penalty of perjury under the laws of the United States in accordance with the Debarment Certification attached, provided that the Debarment Certification also includes any required statements concerning exceptions that are applicable.

N.C.G.S. § 133-32 and Executive Order 24 prohibit the offer to, or acceptance by, any State Employee of any gift from anyone with a contract with the State, or from any person seeking to do business with the State. By execution of any response in this procurement, you attest, for your entire organization and its employees or agents, that you are not aware that any such gift has been offered, accepted, or promised by any employees of your organization.

SIGNATURE OF CONTRACTOR

J. T. Russell & Sons, Inc

Full name of Corporation

PO Box 670, Albemarle, NC 28002

Address as Prequalified

Attest A. James Russell
Secretary/~~Assistant Secretary~~
Select appropriate title

By R. E. Russell
President/~~Vice President/Assistant Vice President~~
Select appropriate title

A. James Russell
Print or type Signer's name

R. E. Russell
Print or type Signer's name

CORPORATE SEAL

AFFIDAVIT MUST BE NOTARIZED

Subscribed and sworn to before me this the

12 day of November 2015.

Julie C Pfyle
Signature of Notary Public

of Stanly County

State of North Carolina

My Commission Expires: 05-21-2016

NOTARY SEAL

Contract No. C203587
County Davidson

Rev. 5-19-11

DEBARMENT CERTIFICATION

Conditions for certification:

1. The prequalified bidder shall provide immediate written notice to the Department if at any time the bidder learns that his certification was erroneous when he submitted his debarment certification or explanation filed with the Department, or has become erroneous because of changed circumstances.

2. The terms *covered transaction, debarred, suspended, ineligible, lower tier covered transaction, participant, person, primary covered transaction, principal, proposal,* and *voluntarily excluded,* as used in this provision, have the meanings set out in the Definitions and Coverage sections of the rules implementing Executive Order 12549. A copy of the Federal Rules requiring this certification and detailing the definitions and coverages may be obtained from the Contract Officer of the Department.

3. The prequalified bidder agrees by submitting this form, that he will not knowingly enter into any lower tier covered transaction with a person who is debarred, suspended, declared ineligible, or voluntarily excluded from participation in NCDOT contracts, unless authorized by the Department.

4. For Federal Aid projects, the prequalified bidder further agrees that by submitting this form he will include the Federal-Aid Provision titled *Required Contract Provisions Federal-Aid Construction Contract (Form FHWA PR* 1273) provided by the Department, without subsequent modification, in all lower tier covered transactions.

5. The prequalified bidder may rely upon a certification of a participant in a lower tier covered transaction that he is not debarred, suspended, ineligible, or voluntarily excluded from the covered transaction, unless he knows that the certification is erroneous. The bidder may decide the method and frequency by which he will determine the eligibility of his subcontractors.

6. Nothing contained in the foregoing shall be construed to require establishment of a system of records in order to render in good faith the certification required by this provision. The knowledge and information of a participant is not required to exceed that which is normally possessed by a prudent person in the ordinary course of business dealings.

7. Except as authorized in paragraph 6 herein, the Department may terminate any contract if the bidder knowingly enters into a lower tier covered transaction with a person who is suspended, debarred, ineligible, or voluntarily excluded from participation in this transaction, in addition to other remedies available by the Federal Government.

Contract No. C203587

County Davidson

Rev. 5-19-11

DEBARMENT CERTIFICATION

The prequalified bidder certifies to the best of his knowledge and belief, that he and his principals:

a. Are not presently debarred, suspended, proposed for debarment, declared ineligible, or voluntarily excluded from covered transactions by any Federal department or agency;

b. Have not within a three-year period preceding this proposal been convicted of or had a civil judgment rendered against them for commission of fraud or a criminal offense in connection with obtaining, attempting to obtain, or performing a public (Federal, State or local) transaction or contract under a public transaction; violation of Federal or State antitrust statutes or commission of embezzlement, theft, forgery, bribery, falsification or destruction of records; making false statements; or receiving stolen property;

c. Are not presently indicted for or otherwise criminally or civilly charged by a governmental entity (Federal, State or local) with commission of any of the offenses enumerated in paragraph b. of this certification; and

d. Have not within a three-year period preceding this proposal had one or more public transactions (Federal, State or local) terminated for cause or default.

e. Will submit a revised Debarment Certification immediately if his status changes and will show in his bid proposal an explanation for the change in status.

If the prequalified bidder cannot certify that he is not debarred, he shall provide an explanation with this submittal. An explanation will not necessarily result in denial of participation in a contract.

Failure to submit a non-collusion affidavit and debarment certification will result in the prequalified bidder's bid being considered non-responsive.

☐ Check here if an explanation is attached to this certification.

Contract No. **C203587**

County (ies): **Davidson**

ACCEPTED BY THE
DEPARTMENT OF TRANSPORTATION

DocuSigned by:
Randy A Sam
A7079FC32A09478...

Contract Officer

11/16/2015

Date

Execution of Contract and Bonds
Approved as to Form:

DocuSigned by:
Thomas Moore
A2E31ABDC19E410...

Attorney General

11/13/2015

Date

Signature Sheet (Bid - Acceptance by Department)

Contract No. C203587
County Davidson

Rev 5-17-11

CONTRACT PAYMENT BOND

Date of Payment Bond Execution	November 10, 2015
Name of Principal Contractor	J T Russell and Sons, Inc
Name of Surety:	Fidelity and Deposit Company of Maryland
Name of Contracting Body:	**North Carolina Department of Transportation**
	Raleigh, North Carolina
Amount of Bond:	$10,164,621.36
Contract ID No.:	C203587
County Name:	Davidson County

KNOW ALL MEN BY THESE PRESENTS, That we, the PRINCIPAL CONTRACTOR (hereafter, PRINCIPAL) and SURETY above named, are held and firmly bound unto the above named Contracting Body, hereinafter called the Contracting Body, in the penal sum of the amount stated above for the payment of which sum well and truly to be made, we bind ourselves, our heirs, executors, administrators, and successors, jointly and severally, firmly by these presents.

THE CONDITION OF THIS OBLIGATION IS SUCH, that whereas the principal entered into a certain contract with the Contracting Body, numbered as shown above and hereto attached:

NOW THEREFORE, if the principal shall promptly make payment to all persons supplying labor and material in the prosecution of the work provided for in said contract, and any and all duly authorized modifications of said contract that may hereafter be made, notice of which modifications to the surety being hereby waived, then this obligation to be void; otherwise to remain in full force and virtue.

IN WITNESS WHEREOF, the above-bound parties have executed this instrument under their several seals on the date indicated above, the name and corporate seal of each corporate party being hereto affixed and these presents duly signed by its undersigned representative, pursuant to authority of its governing body.

Contract No. C203587
County Davidson

Rev 5-17-11

CONTRACT PAYMENT BOND

Affix Seal of Surety Company

Fidelity and Deposit Company of Maryland
Print or type Surety Company Name

By Pamela T. Morton
Print, stamp or type name of Attorney-in-Fact

Pamela T. Morton
Signature of Attorney-in-Fact

Julie P. Lingerfelt
Signature of Witness

Julie P. Lingerfelt
Print or type Signer's name

173 N Second St, Albemarle, NC 28001
Address of Attorney-in-Fact

Contract No. C203587
County Davidson

Rev 5-17-11

CONTRACT PAYMENT BOND

CORPORATION

SIGNATURE OF CONTRACTOR (Principal)

J T Russell and Sons, Inc.

Full name of Corporation

PO Box 670, Albemarle, NC 28002

Address as prequalified

By R. E. Russell

Signature of **President**, ~~**Vice President, Assistant Vice President**~~

Select appropriate title

R. E. Russell, Pres.

Print or type Signer's name

Affix Corporate Seal

Attest A. James Russell

Signature of **Secretary**, ~~**Assistant Secretary**~~

Select appropriate title

A. James Russell, Sec.

Print or type Signer's name

PRF7647087
Bond Number

NC Department of Transportation
Obligee

ZURICH AMERICAN INSURANCE COMPANY
COLONIAL AMERICAN CASUALTY AND SURETY COMPANY
FIDELITY AND DEPOSIT COMPANY OF MARYLAND
POWER OF ATTORNEY

KNOW ALL MEN BY THESE PRESENTS: That the ZURICH AMERICAN INSURANCE COMPANY, a corporation of the State of New York, the COLONIAL AMERICAN CASUALTY AND SURETY COMPANY, a corporation of the State of Maryland, and the FIDELITY AND DEPOSIT COMPANY OF MARYLAND a corporation of the State of Maryland (herein collectively called the "Companies"), by **Michael P. Bond, Vice President**, in pursuance of authority granted by Article V, Section 8, of the By-Laws of said Companies, which are set forth on the reverse side hereof and are hereby certified to be in full force and effect on the date hereof, do hereby nominate, constitute, and appoint Pamela T. Morton, its true and lawful agent and Attorney-in-Fact, to make, execute, seal and deliver, for, and on its behalf as surety, and as its act and deed: **any and all bonds and undertakings,** and the execution of such bonds or undertakings in pursuance of these presents, shall be as binding upon said Companies, as fully and amply, to all intents and purposes, as if they had been duly executed and acknowledged by the regularly elected officers of the ZURICH AMERICAN INSURANCE COMPANY at its office in New York, New York., the regularly elected officers of the COLONIAL AMERICAN CASUALTY AND SURETY COMPANY at its office in Owings Mills, Maryland., and the regularly elected officers of the FIDELITY AND DEPOSIT COMPANY OF MARYLAND at its office in Owings Mills, Maryland., in their own proper persons.

The said Vice President does hereby certify that the extract set forth on the reverse side hereof is a true copy of Article V, Section 8, of the By-Laws of said Companies, and is now in force.

IN WITNESS WHEREOF, the said Vice-President has hereunto subscribed his/her names and affixed the Corporate Seals of the said **ZURICH AMERICAN INSURANCE COMPANY, COLONIAL AMERICAN CASUALTY AND SURETY COMPANY, and FIDELITY AND DEPOSIT COMPANY OF MARYLAND**, this 10th day of November, A.D. 2015.

ATTEST:
ZURICH AMERICAN INSURANCE COMPANY
COLONIAL AMERICAN CASUALTY AND SURETY COMPANY
FIDELITY AND DEPOSIT COMPANY OF MARYLAND

By: Gerald F. Haley — *Secretary* *Gerald F. Haley*

Michael P. Bond — *Vice President* *Michael P. Bond*

State of Maryland
County of Baltimore

On this 10th day of November A.D. 2015, before the subscriber, a Notary Public of the State of Maryland, duly commissioned and qualified, **Michael P. Bond, Vice President and Gerald F. Haley, Secretary** of the Companies, to me personally known to be the individuals and officers described in and who executed the preceding instrument, and acknowledged the execution of same, and being by me duly sworn, deposeth and saith, that he/she is the said officer of the Company aforesaid, and that the seals affixed to the preceding instrument are the Corporate Seals of said Companies, and that the said Corporate Seals and the signature as such officer were duly affixed and subscribed to the said instrument by the authority and direction of the said Corporations.

IN TESTIMONY WHEREOF, I have hereunto set my hand and affixed my Official Seal the day and year first above written.

Constance A. Dunn

Constance A. Dunn, Notary Public
My Commission Expires: July 9, 2019

EXTRACT FROM BY-LAWS OF THE COMPANIES

"Article V, Section 8, Attorneys-in-Fact. The Chief Executive Officer, the President, or any Executive Vice President or Vice President may, by written instrument under the attested corporate seal, appoint attorneys-in-fact with authority to execute bonds, policies, recognizances, stipulations, undertakings, or other like instruments on behalf of the Company, and may authorize any officer or any such attorney-in-fact to affix the corporate seal thereto; and may with or without cause modify of revoke any such appointment or authority at any time."

CERTIFICATE

I, the undersigned, Vice President of the ZURICH AMERICAN INSURANCE COMPANY, the COLONIAL AMERICAN CASUALTY AND SURETY COMPANY, and the FIDELITY AND DEPOSIT COMPANY OF MARYLAND, do hereby certify that the foregoing Power of Attorney is still in full force and effect on the date of this certificate; and I do further certify that Article V, Section 8, of the By-Laws of the Companies is still in force.

This Power of Attorney and Certificate may be signed by facsimile under and by authority of the following resolution of the Board of Directors of the ZURICH AMERICAN INSURANCE COMPANY at a meeting duly called and held on the 15th day of December 1998.

RESOLVED: "That the signature of the President or a Vice President and the attesting signature of a Secretary or an Assistant Secretary and the Seal of the Company may be affixed by facsimile on any Power of Attorney...Any such Power or any certificate thereof bearing such facsimile signature and seal shall be valid and binding on the Company."

This Power of Attorney and Certificate may be signed by facsimile under and by authority of the following resolution of the Board of Directors of the COLONIAL AMERICAN CASUALTY AND SURETY COMPANY at a meeting duly called and held on the 5th day of May, 1994, and the following resolution of the Board of Directors of the FIDELITY AND DEPOSIT COMPANY OF MARYLAND at a meeting duly called and held on the 10th day of May, 1990.

RESOLVED: "That the facsimile or mechanically reproduced seal of the company and facsimile or mechanically reproduced signature of any Vice-President, Secretary, or Assistant Secretary of the Company, whether made heretofore or hereafter, wherever appearing upon a certified copy of any power of attorney issued by the Company, shall be valid and binding upon the Company with the same force and effect as though manually affixed.

IN TESTIMONY WHEREOF, I have hereunto subscribed my name and affixed the corporate seals of the said Companies, this 10th day of November, 2015.

Thomas O. McClellan, Vice President

Contract No. C203587
County Davidson

Rev 5-17-11

CONTRACT PERFORMANCE BOND

Date of Performance Bond Execution: November 10, 2015

Name of Principal Contractor: J T Russell & Sons, Inc

Name of Surety: Fidelity and Deposit Company of Maryland

Name of Contracting Body: **North Carolina Department of Transportation**

Raleigh, North Carolina

Amount of Bond: $10,164,621.36

Contract ID No.: C203587

County Name: Davidson County

KNOW ALL MEN BY THESE PRESENTS, That we, the PRINCIPAL CONTRACTOR (hereafter, PRINCIPAL) and SURETY above named, are held and firmly bound unto the above named Contracting Body, hereinafter called the Contracting Body, in the penal sum of the amount stated above for the payment of which sum well and truly to be made, we bind ourselves, our heirs, executors, administrators, and successors, jointly and severally, firmly by these presents.

THE CONDITION OF THIS OBLIGATION IS SUCH, that whereas the principal entered into a certain contract with the Contracting Body, numbered as shown above and hereto attached:

NOW THEREFORE, if the principal shall well and truly perform and fulfill all the undertakings, covenants, terms, conditions, and agreements of said contract during the original term of said contract and any extensions thereof that may be granted by the Contracting Body, with or without notice to the Surety, and during the life of any guaranty required under the contract, and shall also well and truly perform and fulfill all the undertakings, covenants, terms, conditions, and agreements of any and all duly authorized modifications of said contract that may hereafter be made, notice of which modifications to the surety being hereby waived, then this obligation to be void; otherwise to remain in full force and virtue.

IN WITNESS WHEREOF, the above-bound parties have executed this instrument under their several seals on the date indicated above, the name and corporate seal of each corporate party being hereto affixed and these presents duly signed by its undersigned representative, pursuant to authority of its governing body.

Contract No. C203587
County Davidson

Rev 5-17-11

CONTRACT PERFORMANCE BOND

Affix Seal of Surety Company

Fidelity and Deposit Company of Maryland
Print or type Surety Company Name

By Pamela T. Morton
Print, stamp or type name of Attorney-in-Fact

Pamela T. Morton
Signature of Attorney-in-Fact

Julie P. Lingerfelt
Signature of Witness

Julie P. Lingerfelt
Print or type Signer's name

173 N Second St., Albemarle, NC 28001
Address of Attorney-in-Fact

Contract No. C203587
County Davidson

Rev 5-17-11

CONTRACT PERFORMANCE BOND

CORPORATION

SIGNATURE OF CONTRACTOR (Principal)

J T Russell and Sons, Inc.

Full name of Corporation

PO Box 670, Albemarle, NC 28002

Address as prequalified

By R. E. Russell

Signature of **President**, ~~**Vice President, Assistant Vice President**~~

Select appropriate title

R. E. Russell, Pres.

Print or type Signer's name

Affix Corporate Seal

Attest A. James Russell

Signature of **Secretary**, ~~**Assistant Secretary**~~

Select appropriate title

A. James Russell, Sec.

Print or type Signer's name

PRF7647087

Bond Number

NC Department of Transportation

Obligee

ZURICH AMERICAN INSURANCE COMPANY
COLONIAL AMERICAN CASUALTY AND SURETY COMPANY
FIDELITY AND DEPOSIT COMPANY OF MARYLAND
POWER OF ATTORNEY

KNOW ALL MEN BY THESE PRESENTS: That the ZURICH AMERICAN INSURANCE COMPANY, a corporation of the State of New York, the COLONIAL AMERICAN CASUALTY AND SURETY COMPANY, a corporation of the State of Maryland, and the FIDELITY AND DEPOSIT COMPANY OF MARYLAND a corporation of the State of Maryland (herein collectively called the "Companies"), by **Michael P. Bond, Vice President**, in pursuance of authority granted by Article V, Section 8, of the By-Laws of said Companies, which are set forth on the reverse side hereof and are hereby certified to be in full force and effect on the date hereof, do hereby nominate, constitute, and appoint Pamela T. Morton, its true and lawful agent and Attorney-in-Fact, to make, execute, seal and deliver, for, and on its behalf as surety, and as its act and deed: **any and all bonds and undertakings,** and the execution of such bonds or undertakings in pursuance of these presents, shall be as binding upon said Companies, as fully and amply, to all intents and purposes, as if they had been duly executed and acknowledged by the regularly elected officers of the ZURICH AMERICAN INSURANCE COMPANY at its office in New York, New York., the regularly elected officers of the COLONIAL AMERICAN CASUALTY AND SURETY COMPANY at its office in Owings Mills, Maryland., and the regularly elected officers of the FIDELITY AND DEPOSIT COMPANY OF MARYLAND at its office in Owings Mills, Maryland., in their own proper persons.

The said Vice President does hereby certify that the extract set forth on the reverse side hereof is a true copy of Article V, Section 8, of the By-Laws of said Companies, and is now in force.

IN WITNESS WHEREOF, the said Vice-President has hereunto subscribed his/her names and affixed the Corporate Seals of the said **ZURICH AMERICAN INSURANCE COMPANY, COLONIAL AMERICAN CASUALTY AND SURETY COMPANY, and FIDELITY AND DEPOSIT COMPANY OF MARYLAND,** this 10th day of November, A.D. 2015.

ATTEST:
ZURICH AMERICAN INSURANCE COMPANY
COLONIAL AMERICAN CASUALTY AND SURETY COMPANY
FIDELITY AND DEPOSIT COMPANY OF MARYLAND

By: Gerald F. Haley — *Secretary* *Gerald F. Haley*

Michael P. Bond — *Vice President* *Michael P. Bond*

State of Maryland
County of Baltimore

On this 10th day of November A.D. 2015, before the subscriber, a Notary Public of the State of Maryland, duly commissioned and qualified, **Michael P. Bond, Vice President and Gerald F. Haley, Secretary** of the Companies, to me personally known to be the individuals and officers described in and who executed the preceding instrument, and acknowledged the execution of same, and being by me duly sworn, deposeth and saith, that he/she is the said officer of the Company aforesaid, and that the seals affixed to the preceding instrument are the Corporate Seals of said Companies, and that the said Corporate Seals and the signature as such officer were duly affixed and subscribed to the said instrument by the authority and direction of the said Corporations.

IN TESTIMONY WHEREOF, I have hereunto set my hand and affixed my Official Seal the day and year first above written.

Constance A. Dunn

Constance A. Dunn, Notary Public
My Commission Expires: July 9, 2019

EXTRACT FROM BY-LAWS OF THE COMPANIES

"Article V, Section 8, Attorneys-in-Fact. The Chief Executive Officer, the President, or any Executive Vice President or Vice President may, by written instrument under the attested corporate seal, appoint attorneys-in-fact with authority to execute bonds, policies, recognizances, stipulations, undertakings, or other like instruments on behalf of the Company, and may authorize any officer or any such attorney-in-fact to affix the corporate seal thereto; and may with or without cause modify of revoke any such appointment or authority at any time."

CERTIFICATE

I, the undersigned, Vice President of the ZURICH AMERICAN INSURANCE COMPANY, the COLONIAL AMERICAN CASUALTY AND SURETY COMPANY, and the FIDELITY AND DEPOSIT COMPANY OF MARYLAND, do hereby certify that the foregoing Power of Attorney is still in full force and effect on the date of this certificate; and I do further certify that Article V, Section 8, of the By-Laws of the Companies is still in force.

This Power of Attorney and Certificate may be signed by facsimile under and by authority of the following resolution of the Board of Directors of the ZURICH AMERICAN INSURANCE COMPANY at a meeting duly called and held on the 15th day of December 1998.

RESOLVED: "That the signature of the President or a Vice President and the attesting signature of a Secretary or an Assistant Secretary and the Seal of the Company may be affixed by facsimile on any Power of Attorney...Any such Power or any certificate thereof bearing such facsimile signature and seal shall be valid and binding on the Company."

This Power of Attorney and Certificate may be signed by facsimile under and by authority of the following resolution of the Board of Directors of the COLONIAL AMERICAN CASUALTY AND SURETY COMPANY at a meeting duly called and held on the 5th day of May, 1994, and the following resolution of the Board of Directors of the FIDELITY AND DEPOSIT COMPANY OF MARYLAND at a meeting duly called and held on the 10th day of May, 1990.

RESOLVED: "That the facsimile or mechanically reproduced seal of the company and facsimile or mechanically reproduced signature of any Vice-President, Secretary, or Assistant Secretary of the Company, whether made heretofore or hereafter, wherever appearing upon a certified copy of any power of attorney issued by the Company, shall be valid and binding upon the Company with the same force and effect as though manually affixed.

IN TESTIMONY WHEREOF, I have hereunto subscribed my name and affixed the corporate seals of the said Companies, this 10th day of November, 2015.

Thomas O. McClellan, Vice President