STATE OF NORTH CAROLINA
DEPARTMENT OF TRANSPORTATION
RALEIGH, N.C.

C203994

CONTRACT AND
CONTRACT BONDS

FOR CONTRACT NO. C203994

WBS	44378.3.1 STATE FUNDED
T.I.P NO.	U-5806
COUNTY OF	CABARRUS
THIS IS THE	ROADWAY & STRUCTURE CONTRACT
ROUTE NUMBER	SR 2894 LENGTH 0.434 MILES
LOCATION	INTERSECTION OF SR-2894 (CONCORD MILLS BOULEVARD) AND ENTRANCE #1 KINGS GRANT PAVILION.
CONTRACTOR	BLYTHE DEVELOPMENT CO.
ADDRESS	1415 E WESTINGHOUSE BLVD CHARLOTTE, NC 282735801
BIDS OPENED	DECEMBER 19, 2017
CONTRACT EXECUTION	1/5/2018

STATE OF NORTH CAROLINA
DEPARTMENT OF TRANSPORTATION
RALEIGH, N.C.

PROPOSAL

INCLUDES ADDENDUM No. 1 DATED 12-07-2017

DATE AND TIME OF BID OPENING: **DECEMBER 19, 2017 AT 2:00 PM**

CONTRACT ID	C203994
WBS	44378.3.1

FEDERAL-AID NO.	STATE FUNDED
COUNTY	CABARRUS
T.I.P. NO.	U-5806
MILES	0.434
ROUTE NO.	SR 2894
LOCATION	INTERSECTION OF SR-2894 (CONCORD MILLS BOULEVARD) AND ENTRANCE #1 KINGS GRANT PAVILION.
TYPE OF WORK	GRADING, DRAINAGE, PAVING, SIGNAL, AND STRUCTURE.

NOTICE:

ALL BIDDERS SHALL COMPLY WITH ALL APPLICABLE LAWS REGULATING THE PRACTICE OF GENERAL CONTRACTING AS CONTAINED IN CHAPTER 87 OF THE GENERAL STATUTES OF NORTH CAROLINA WHICH REQUIRES THE BIDDER TO BE LICENSED BY THE N.C. LICENSING BOARD FOR CONTRACTORS WHEN BIDDING ON ANY NON-FEDERAL AID PROJECT WHERE THE BID IS $30,000 OR MORE, EXCEPT FOR CERTAIN SPECIALTY WORK AS DETERMINED BY THE LICENSING BOARD. BIDDERS SHALL ALSO COMPLY WITH ALL OTHER APPLICABLE LAWS REGULATING THE PRACTICES OF ELECTRICAL, PLUMBING, HEATING AND AIR CONDITIONING AND REFRIGERATION CONTRACTING AS CONTAINED IN CHAPTER 87 OF THE GENERAL STATUTES OF NORTH CAROLINA. NOTWITHSTANDING THESE LIMITATIONS ON BIDDING, THE BIDDER WHO IS AWARDED ANY FEDERAL - AID FUNDED PROJECT SHALL COMPLY WITH CHAPTER 87 OF THE GENERAL STATUTES OF NORTH CAROLINA FOR LICENSING REQUIREMENTS WITHIN 60 CALENDAR DAYS OF BID OPENING.

BIDS WILL BE RECEIVED AS SHOWN BELOW:

THIS IS A ROADWAY & STRUCTURE PROPOSAL

5% BID BOND OR BID DEPOSIT REQUIRED

PROPOSAL FOR THE CONSTRUCTION OF

CONTRACT No. C203994 IN CABARRUS COUNTY, NORTH CAROLINA

Date_____ 20_____

DEPARTMENT OF TRANSPORTATION,

RALEIGH, NORTH CAROLINA

The Bidder has carefully examined the location of the proposed work to be known as Contract No. **C203994** has carefully examined the plans and specifications, which are acknowledged to be part of the proposal, the special provisions, the proposal, the form of contract, and the forms of contract payment bond and contract performance bond; and thoroughly understands the stipulations, requirements and provisions. The undersigned bidder agrees to bound upon his execution of the bid and subsequent award to him by the Board of Transportation in accordance with this proposal to provide the necessary contract payment bond and contract performance bond within fourteen days after the written notice of award is received by him. The undersigned Bidder further agrees to provide all necessary machinery, tools, labor, and other means of construction; and to do all the work and to furnish all materials, except as otherwise noted, necessary to perform and complete the said contract in accordance with *the 2012 Standard Specifications for Roads and Structures* by the dates(s) specified in the Project Special Provisions and in accordance with the requirements of the Engineer, and at the unit or lump sum prices, as the case may be, for the various items given on the sheets contained herein.

The Bidder shall provide and furnish all the materials, machinery, implements, appliances and tools, and perform the work and required labor to construct and complete State Highway Contract No. **C203994** in **Cabarrus County**, for the unit or lump sum prices, as the case may be, bid by the Bidder in his bid and according to the proposal, plans, and specifications prepared by said Department, which proposal, plans, and specifications show the details covering this project, and hereby become a part of this contract.

The published volume entitled *North Carolina Department of Transportation, Raleigh, Standard Specifications for Roads and Structures, January 2012* with all amendments and supplements thereto, is by reference incorporated into and made a part of this contract; that, except as herein modified, all the construction and work included in this contract is to be done in accordance with the specifications contained in said volume, and amendments and supplements thereto, under the direction of the Engineer.

If the proposal is accepted and the award is made, the contract is valid only when signed either by the Contract Officer or such other person as may be designated by the Secretary to sign for the Department of Transportation. The conditions and provisions herein cannot be changed except over the signature of the said Contract Officer.

The quantities shown in the itemized proposal for the project are considered to be approximate only and are given as the basis for comparison of bids. The Department of Transportation may increase or decrease the quantity of any item or portion of the work as may be deemed necessary or expedient.

An increase or decrease in the quantity of an item will not be regarded as sufficient ground for an increase or decrease in the unit prices, nor in the time allowed for the completion of the work, except as provided for the contract.

Accompanying this bid is a bid bond secured by a corporate surety, or certified check payable to the order of the Department of Transportation, for five percent of the total bid price, which deposit is to be forfeited as liquidated damages in case this bid is accepted and the Bidder shall fail to provide the required payment and performance bonds with the Department of Transportation, under the condition of this proposal, within 14 calendar days after the written notice of award is received by him, as provided in the *Standard Specifications*; otherwise said deposit will be returned to the Bidder.



State Contract Officer

DocuSigned by:
Ronald E. Davenport, Jr.
F81B6038A47A442...

12/7/2017

TABLE OF CONTENTS

COVER SHEET
PROPOSAL SHEET

PROJECT SPECIAL PROVISIONS

CONTRACT TIME AND LIQUIDATED DAMAGES: G-1
INTERMEDIATE CONTRACT TIME NUMBER 1 AND LIQUIDATED DAMAGES: G-1
INTERMEDIATE CONTRACT TIME NUMBER 2 AND LIQUIDATED DAMAGES: G-2
INTERMEDIATE CONTRACT TIME NUMBER 3 AND LIQUIDATED DAMAGES: G-3
INTERMEDIATE CONTRACT TIME NUMBER 4 AND LIQUIDATED DAMAGES: G-3
INTERMEDIATE CONTRACT TIME NUMBER 5 AND LIQUIDATED DAMAGES: G-4
INTERMEDIATE CONTRACT TIME NUMBER 6 AND LIQUIDATED DAMAGES: G-4
INTERMEDIATE CONTRACT TIME NUMBER 7 AND LIQUIDATED DAMAGES: G-5
PERMANENT VEGETATION ESTABLISHMENT:..... G-5
MAJOR CONTRACT ITEMS: G-6
SPECIALTY ITEMS:..... G-6
FUEL PRICE ADJUSTMENT:..... G-6
SCHEDULE OF ESTIMATED COMPLETION PROGRESS:..... G-7
MINORITY BUSINESS ENTERPRISE AND WOMEN BUSINESS ENTERPRISE:..... G-7
CONTRACTOR'S LICENSE REQUIREMENTS:..... G-22
SUBSURFACE INFORMATION:..... G-22
LOCATING EXISTING UNDERGROUND UTILITIES:..... G-22
VALUE ENGINEERING PROPOSAL: G-22
RESOURCE CONSERVATION AND ENV. SUSTAINABLE PRACTICES:..... G-23
DOMESTIC STEEL:..... G-24
PORTABLE CONCRETE BARRIER - (Partial Payments for Materials):..... G-24
MAINTENANCE OF THE PROJECT: G-25
COOPERATION BETWEEN CONTRACTORS:..... G-25
TWELVE MONTH GUARANTEE:..... G-26
OUTSOURCING OUTSIDE THE USA:..... G-26
GIFTS FROM VENDORS AND CONTRACTORS:..... G-27
LIABILITY INSURANCE:..... G-27
EROSION AND SEDIMENT CONTROL/STORMWATER CERTIFICATION:..... G-27
PROCEDURE FOR MONITORING BORROW PIT DISCHARGE:..... G-32
EMPLOYMENT:..... G-34
STATE HIGHWAY ADMINISTRATOR TITLE CHANGE:..... G-34
SUBLETTING OF CONTRACT:..... G-34
MOBILIZATION: G-35
DELAY IN RIGHT OF ENTRY:..... G-35

ROADWAY..... R-1

STANDARD SPECIAL PROVISIONS

AVAILABILITY FUNDS – TERMINATION OF CONTRACTS SSP-1
NCDOT GENERAL SEED SPECIFICATION FOR SEED QUALITY SSP-2
ERRATA..... SSP-5

PLANT AND PEST QUARANTINES SSP-7
MINIMUM WAGES SSP-8
AWARD OF CONTRACT SSP-9
ON-THE-JOB TRAINING SSP-14
NCDENR NAME CHANGE SSP-17

UNIT PROJECT SPECIAL PROVISIONS

GEOTECHNICAL GT-0.1
SIGNING SN-1
TRAFFIC CONTROL TC-1
UTILITY CONSTRUCTION UC-1
UTILITY BY OTHERS UBO-1
EROSION CONTROL EC-1
TRAFFIC SIGNALS TS-1
STRUCTURE / CULVERTS ST-1

PROPOSAL ITEM SHEET

ITEM SHEET(S) (TAN SHEETS)

PROJECT SPECIAL PROVISIONS

GENERAL

CONTRACT TIME AND LIQUIDATED DAMAGES:
(4-17-12) 108 SP1 G07 C

The date of availability for this contract is **May 1, 2018**.

The completion date for this contract is **December 12, 2020**.

Except where otherwise provided by the contract, observation periods required by the contract will not be a part of the work to be completed by the completion date and/or intermediate contract times stated in the contract. The acceptable completion of the observation periods that extend beyond the final completion date shall be a part of the work covered by the performance and payment bonds.

The liquidated damages for this contract are **Two Hundred Dollars ($ 200.00)** per calendar day. These liquidated damages will not be cumulative with any liquidated damages which may become chargeable under Intermediate Contract Time Number 1.

INTERMEDIATE CONTRACT TIME NUMBER 1 AND LIQUIDATED DAMAGES:
(7-1-95) (Rev. 2-21-12) 108 SP1 G13 A

Except for that work required under the Project Special Provisions entitled *Planting, Reforestation* and/or *Permanent Vegetation Establishment*, included elsewhere in this proposal, the Contractor will be required to complete all work included in this contract and shall place and maintain traffic on same.

The date of availability for this intermediate contract time is **May 1, 2018**.

The completion date for this intermediate contract time is **June 15, 2020**.

The liquidated damages for this intermediate contract time are **Two Thousand Dollars ($ 2,000.00)** per calendar day.

Upon apparent completion of all the work required to be completed by this intermediate date, a final inspection will be held in accordance with Article 105-17 and upon acceptance, the Department will assume responsibility for the maintenance of all work except *Planting, Reforestation* and/or *Permanent Vegetation Establishment*. The Contractor will be responsible for and shall make corrections of all damages to the completed roadway caused by his planting operations, whether occurring prior to or after placing traffic through the project.

INTERMEDIATE CONTRACT TIME NUMBER 2 AND LIQUIDATED DAMAGES:
(2-20-07) 108 SP1 G14 A

The Contractor shall complete the required work of installing, maintaining, and removing the traffic control devices for lane closures and restoring traffic to the existing traffic pattern. The Contractor shall not close or narrow a lane of traffic on **Concord Mills Boulevard, Bruton Smith Boulevard, I-85 Ramps, or Driveways,** during the following time restrictions:

DAY AND TIME RESTRICTIONS

Monday thru Thursday, 6:00 AM to 7:00 PM
Friday, 6:00 AM to 10:00 PM
Saturday & Sunday, 10:00 AM to 10:00 PM

In addition, the Contractor shall not close or narrow a lane of traffic on **Concord Mills Boulevard, Bruton Smith Boulevard, I-85 Ramps, or Driveways,** detain and/or alter the traffic flow on or during holidays, holiday weekends, special events, or any other time when traffic is unusually heavy, including the following schedules:

HOLIDAY AND HOLIDAY WEEKEND LANE CLOSURE RESTRICTIONS

1. For **unexpected occurrence** that creates unusually high traffic volumes, as directed by the Engineer.

2. For **New Year's Day**, between the hours of **6:00 AM** December 31st and **7:00 PM** January 2nd. If New Year's Day is on a Friday, Saturday, Sunday or Monday, then until **7:00 PM** the following Tuesday.

3. For **Easter**, between the hours of **6:00 AM** Thursday and **7:00 PM** Monday.

4. For **Memorial Day**, between the hours of **6:00 AM** Friday and **7:00 PM** Tuesday.

5. For **Independence Day**, between the hours of **6:00 AM** the day before Independence Day and **7:00 PM** the day after Independence Day.

   If **Independence Day** is on a Friday, Saturday, Sunday or Monday, then between the hours of **6:00 AM** the Thursday before Independence Day and **7:00 PM** the Tuesday after Independence Day.

6. For **Labor Day**, between the hours of **6:00 AM** Friday and **7:00 PM** Tuesday.

7. For **Thanksgiving Day**, between the hours of **6:00 AM** Tuesday and **7:00 PM** Monday.

8. For **Christmas**, between the hours of **6:00 AM** the Friday before the week of Christmas Day and **8:00 PM** the following Tuesday after the week of Christmas Day.

9. For **any race events at Charlotte Motor Speedway, zMax Dragway, or the Dirt Track** between the hours of **6:00 AM** the **Wednesday** before the **first track event** and **7:00 PM** the day after the **last track event**.

10. For the **Charlotte Auto Fair**, between the hours of **6:00 AM** the **Wednesday** of the week of the **Fair** until **6:00 AM** the following **Monday** after the **Fair**.

11. For the **Coca-Cola 600 race event**, the Contractor shall suspend all work operations by **12:00 AM** the **Saturday** two weeks before the day of the event and resume work operations at **6:00 AM** the following **Tuesday** after the event.

12. For the **Bank of America 500 race event,** the Contractor shall suspend all work operations by **12:00 AM** the **Saturday** one week before the day of the event and resume work operations at **6:00 AM** the following **Monday** after the event

Holidays and holiday weekends shall include New Year's, Easter, Memorial Day, Independence Day, Labor Day, Thanksgiving, and Christmas. The Contractor shall schedule his work so that lane closures will not be required during these periods, unless otherwise directed by the Engineer.

The time of availability for this intermediate contract work shall be the time the Contractor begins to install all traffic control devices for lane closures according to the time restrictions listed herein.

The completion time for this intermediate contract work shall be the time the Contractor is required to complete the removal of all traffic control devices for lane closures according to the time restrictions stated above and place traffic in the existing traffic pattern.

The liquidated damages are **Two Thousand Five Hundred Dollars ($2,500.00)** per fifteen **(15)** minute time period.

INTERMEDIATE CONTRACT TIME NUMBER 3 AND LIQUIDATED DAMAGES:
(2-20-07) (Rev. 6-18-13) 108 SP1 G14 F

The Contractor shall complete the work required of **Phase III Step #1 thru Phase III Step #8** as shown on Sheet(s) **TMP-9 thru TMP-11** and shall place and maintain traffic on same.

The date of availability for this intermediate contract time is **January 2, 2019.**

The completion date for this intermediate contract time is **October 31, 2019.**

The liquidated damages are **Ten Thousand Dollars ($10,000.00)** per calendar day.

INTERMEDIATE CONTRACT TIME NUMBER 4 AND LIQUIDATED DAMAGES:
(2-20-07) (Rev. 6-18-13) 108 SP1 G14 H

The Contractor shall complete the work required of **Phase III Step #4** as shown on Sheet **TMP-10** and shall place and maintain traffic on same.

The date of availability for this intermediate contract time is the date the Contractor elects to begin the work.

The completion date for this intermediate contract time is the date which is **Thirty (30)** consecutive calendar days after and including the date the Contractor begins this work.

The liquidated damages are **Five Hundred Dollars ($500.00)** per calendar day.

INTERMEDIATE CONTRACT TIME NUMBER 5 AND LIQUIDATED DAMAGES:
(2-20-07) 108 SP1 G14 D

The Contractor shall complete the required work of installing, maintaining and removing the traffic control devices for road closures and restoring traffic to the existing traffic pattern. The Contractor shall not close **Concord Mills Boulevard Eastbound** for the purpose of overhead girder installation during the following time restrictions:

DAY AND TIME RESTRICTIONS

Monday thru Thursday, 5:00 AM to 12:00 AM
And from Friday at 5:00 AM to Monday at 12:00 AM

The time of availability for this intermediate contract time will be the time the Contractor begins to install traffic control devices required for road closures according to the time restrictions stated herein.

The completion time for this intermediate contract time will be the time the Contractor is required to complete the removal of traffic control devices required for the road closures according to the time restrictions stated herein and restore traffic to the existing traffic pattern

The liquidated damages are **Two Thousand Five Hundred Dollars ($2,500.00)** per fifteen **(15)** minute time period.

INTERMEDIATE CONTRACT TIME NUMBER 6 AND LIQUIDATED DAMAGES:
(2-20-07) (Rev. 10-15-13) 108 SP1 G14 E

The Contractor shall complete the required work of installing, maintaining and removing the traffic control devices for road closures and restoring traffic to the existing traffic pattern. The Contractor shall not close **Concord Mills Boulevard or Bruton Smith Boulevard** for the purpose of overhead sign installations during the following time restrictions:

DAY AND TIME RESTRICTIONS

Monday thru Sunday, 4:00 AM to 12:00 AM

The maximum allowable time for overhead sign installations is **20** minutes for **Concord Mills Boulevard or Bruton Smith Boulevard**. The Contractor shall reopen the travel lanes to traffic until any resulting traffic queue is depleted.

The time of availability for this intermediate contract time will be the time the Contractor begins to install traffic control devices required for the road closures according to the time restrictions stated herein.

The completion time for this intermediate contract time will be the time the Contractor is required to complete the removal of traffic control devices required for the road closures according to the time restrictions stated herein and restore traffic to the existing traffic pattern.

The liquidated damages are **Two Thousand Five Hundred Dollars ($2,500.00)** per twenty **(20)** minute time period.

INTERMEDIATE CONTRACT TIME NUMBER 7 AND LIQUIDATED DAMAGES:
(2-20-07) 108 SP1 G14 D

The Contractor shall complete the required work of installing, maintaining and removing the traffic control devices for road closures and restoring traffic to the existing traffic pattern. The Contractor shall not close **Exit 49 I-85 Southbound Off-Ramp** for the purpose of overhead sign installations during the following time restrictions:

DAY AND TIME RESTRICTIONS

Monday thru Sunday, 4:00 AM to 12:00 AM

The time of availability for this intermediate contract time will be the time the Contractor begins to install traffic control devices required for road closures according to the time restrictions stated herein.

The completion time for this intermediate contract time will be the time the Contractor is required to complete the removal of traffic control devices required for the road closures according to the time restrictions stated herein and restore traffic to the existing traffic pattern.

The liquidated damages are **Two Thousand Five Hundred Dollars ($2,500.00)** per fifteen **(15)** minute time period.

PERMANENT VEGETATION ESTABLISHMENT:
(2-16-12) (Rev. 10-15-13) 104 SP1 G16

Establish a permanent stand of the vegetation mixture shown in the contract. During the period between initial vegetation planting and final project acceptance, perform all work necessary to establish permanent vegetation on all erodible areas within the project limits, as well as, in borrow and waste pits. This work shall include erosion control device maintenance and installation, repair seeding and mulching, supplemental seeding and mulching, mowing, and fertilizer topdressing, as directed. All work shall be performed in accordance with the applicable section of the *2012 Standard Specifications*. All work required for initial vegetation planting shall be performed as a part of the work necessary for the completion and acceptance of the Intermediate Contract Time (ICT). Between the time of ICT and Final Project acceptance, or otherwise referred to as the vegetation establishment period, the Department will be responsible for preparing the required National Pollutant Discharge Elimination System (NPDES) inspection records.

Once the Engineer has determined that the permanent vegetation establishment requirement has been achieved at an 80% vegetation density (the amount of established vegetation per given area to stabilize the soil) and no erodible areas exist within the project limits, the Contractor will be notified to remove the remaining erosion control devices that are no longer needed. The Contractor will be responsible for, and shall correct any areas disturbed by operations performed in permanent vegetation establishment and the removal of temporary erosion control measures, whether occurring prior to or after placing traffic on the project.

Payment for *Response for Erosion Control*, *Seeding and Mulching, Repair Seeding*, *Supplemental Seeding, Mowing, Fertilizer Topdressing, Silt Excavation,* and *Stone for Erosion Control* will be made at contract unit prices for the affected items. Work required that is not represented by contract line items will be paid in accordance with Articles 104-7 or 104-3 of the *2012 Standard Specifications*. No additional compensation will be made for maintenance and removal of temporary erosion control items.

MAJOR CONTRACT ITEMS:

(2-19-02) 104 SP1 G28

The following listed items are the major contract items for this contract (see Article 104-5 of the *2012 Standard Specifications*):

Line #	Description
14	#57 Stone
208	MSE Retaining Wall No. 3
214	Class A Concrete (Bridge)
222	Concrete Barrier Rail With Moment Slab

SPECIALTY ITEMS:

(7-1-95)(Rev. 1-17-12) 108-6 SP1 G37

Items listed below will be the specialty items for this contract (see Article 108-6 of the *2012 Standard Specifications*).

Line #	Description
60-67	Guardrail
68	Fencing
71-84	Signing
100-108	Long-Life Pavement Markings
109	Removable Tape
120-121	Permanent Pavement Markers
123-136	Utility Construction
137-160	Erosion Control
161-205, 221	Signals/ITS System

FUEL PRICE ADJUSTMENT:

(11-15-05) (Rev. 2-18-14) 109-8 SP1 G43

Revise the *2012 Standard Specifications* as follows:

Page 1-83, Article 109-8, Fuel Price Adjustments, add the following:

The base index price for DIESEL #2 FUEL is **$ 1.8971** per gallon. Where any of the following are included as pay items in the contract, they will be eligible for fuel price adjustment.

The pay items and the fuel factor used in calculating adjustments to be made will be as follows:

Description	Units	Fuel Usage Factor Diesel
Unclassified Excavation	Gal/CY	0.29
Borrow Excavation	Gal/CY	0.29
Class IV Subgrade Stabilization	Gal/Ton	0.55
Aggregate Base Course	Gal/Ton	0.55
Sub-Ballast	Gal/Ton	0.55
Asphalt Concrete Base Course, Type ____	Gal/Ton	2.90
Asphalt Concrete Intermediate Course, Type ____	Gal/Ton	2.90
Asphalt Concrete Surface Course, Type ____	Gal/Ton	2.90
Open-Graded Asphalt Friction Course	Gal/Ton	2.90
Permeable Asphalt Drainage Course, Type ____	Gal/Ton	2.90
Sand Asphalt Surface Course, Type ____	Gal/Ton	2.90
Aggregate for Cement Treated Base Course	Gal/Ton	0.55
Portland Cement for Cement Treated Base Course	Gal/Ton	0.55
__" Portland Cement Concrete Pavement	Gal/SY	0.245
Concrete Shoulders Adjacent to __" Pavement	Gal/SY	0.245

SCHEDULE OF ESTIMATED COMPLETION PROGRESS:

(7-15-08) (Rev. 5-16-17) 108-2 SP1 G58

The Contractor's attention is directed to the Standard Special Provision entitled *Availability of Funds Termination of Contracts* included elsewhere in this proposal. The Department of Transportation's schedule of estimated completion progress for this project as required by that Standard Special Provision is as follows:

	Fiscal Year	Progress (% of Dollar Value)
2018	(7/01/17 - 6/30/18)	**12**% of Total Amount Bid
2019	(7/01/18 - 6/30/19)	**57**% of Total Amount Bid
2020	(7/01/19 - 6/30/20)	**31**% of Total Amount Bid

The Contractor shall also furnish his own progress schedule in accordance with Article 108-2 of the *2012 Standard Specifications*. Any acceleration of the progress as shown by the Contractor's progress schedule over the progress as shown above shall be subject to the approval of the Engineer.

MINORITY BUSINESS ENTERPRISE AND WOMEN BUSINESS ENTERPRISE:

(10-16-07)(Rev. 1-17-17) 102-15(J) SP1 G66

Description

The purpose of this Special Provision is to carry out the North Carolina Department of Transportation’s policy of ensuring nondiscrimination in the award and administration of contracts financed in whole or in part with State funds.

Definitions

Additional MBE/WBE Subcontractors - Any MBE/WBE submitted at the time of bid that will not be used to meet either the MBE or WBE goal. No submittal of a Letter of Intent is required, unless the additional participation is used for banking purposes.

Committed MBE/WBE Subcontractor - Any MBE/WBE submitted at the time of bid that is being used to meet either the MBE or WBE goal by submission of a Letter of Intent. Or any MBE or WBE used as a replacement for a previously committed MBE or WBE firm.

Contract Goals Requirement - The approved MBE and WBE participation at time of award, but not greater than the advertised contract goals for each.

Goal Confirmation Letter - Written documentation from the Department to the bidder confirming the Contractor's approved, committed MBE and WBE participation along with a listing of the committed MBE and WBE firms.

Manufacturer - A firm that operates or maintains a factory or establishment that produces on the premises, the materials or supplies obtained by the Contractor.

MBE Goal - A portion of the total contract, expressed as a percentage, that is to be performed by committed MBE subcontractor(s).

Minority Business Enterprise (MBE) - A firm certified as a Disadvantaged Minority-Owned Business Enterprise through the North Carolina Unified Certification Program.

Regular Dealer - A firm that owns, operates, or maintains a store, warehouse, or other establishment in which the materials or supplies required for the performance of the contract are bought, kept in stock, and regularly sold to the public in the usual course of business. A regular dealer engages in, as its principal business and in its own name, the purchase and sale or lease of the products in question. A regular dealer in such bulk items as steel, cement, gravel, stone, and petroleum products need not keep such products in stock, if it owns and operates distribution equipment for the products. Brokers and packagers are not regarded as manufacturers or regular dealers within the meaning of this section.

North Carolina Unified Certification Program (NCUCP) - A program that provides comprehensive services and information to applicants for MBE/WBE certification. The MBE/WBE program follows the same regulations as the federal Disadvantaged Business Enterprise (DBE) program in accordance with 49 CFR Part 26.

United States Department of Transportation (USDOT) - Federal agency responsible for issuing regulations (49 CFR Part 26) and official guidance for the DBE program.

WBE Goal - A portion of the total contract, expressed as a percentage, that is to be performed by committed WBE subcontractor(s).

Women Business Enterprise (WBE) - A firm certified as a Disadvantaged Women-Owned Business Enterprise through the North Carolina Unified Certification Program.

Forms and Websites Referenced in this Provision

Payment Tracking System - On-line system in which the Contractor enters the payments made to MBE and WBE subcontractors who have performed work on the project. https://apps.dot.state.nc.us/Vendor/PaymentTracking/

DBE-IS *Subcontractor Payment Information* - Form for reporting the payments made to all MBE/WBE firms working on the project. This form is for paper bid projects only. https://connect.ncdot.gov/business/Turnpike/Documents/Form%20DBE-IS%20Subcontractor%20Payment%20Information.pdf

RF-1 *MBE/WBE Replacement Request Form* - Form for replacing a committed MBE or WBE. http://connect.ncdot.gov/projects/construction/Construction%20Forms/DBE%20MBE%20WBE%20Replacement%20Request%20Form.pdf

SAF *Subcontract Approval Form* - Form required for approval to sublet the contract. http://connect.ncdot.gov/projects/construction/Construction%20Forms/Subcontract%20Approval%20Form%20Rev.%202012.zip

JC-1 *Joint Check Notification Form* - Form and procedures for joint check notification. The form acts as a written joint check agreement among the parties providing full and prompt disclosure of the expected use of joint checks. http://connect.ncdot.gov/projects/construction/Construction%20Forms/Joint%20Check%20Notification%20Form.pdf

Letter of Intent - Form signed by the Contractor and the MBE/WBE subcontractor, manufacturer or regular dealer that affirms that a portion of said contract is going to be performed by the signed MBE/WBE for the amount listed at the time of bid. http://connect.ncdot.gov/letting/LetCentral/Letter%20of%20Intent%20to%20Perform%20as%20a%20Subcontractor.pdf

Listing of MBE and WBE Subcontractors Form - Form for entering MBE/WBE subcontractors on a project that will meet this MBE and WBE goals. This form is for paper bids only. http://connect.ncdot.gov/municipalities/Bid%20Proposals%20for%20LGA%20Content/09%20MBE-WBE%20Subcontractors%20(State).docx

Subcontractor Quote Comparison Sheet - Spreadsheet for showing all subcontractor quotes in the work areas where MBEs and WBEs quoted on the project. This sheet is submitted with good faith effort packages. http://connect.ncdot.gov/business/SmallBusiness/Documents/DBE%20Subcontractor%20Quote%20Comparison%20Example.xls

MBE and WBE Goal

The following goals for participation by Minority Business Enterprises and Women Business Enterprises are established for this contract:

(A) Minority Business Enterprises **3.0 %**

(1) *If the MBE goal is more than zero*, the Contractor shall exercise all necessary and reasonable steps to ensure that MBEs participate in at least the percent of the contract as set forth above as the MBE goal.

(2) *If the MBE goal is zero*, the Contractor shall make an effort to recruit and use MBEs during the performance of the contract. Any MBE participation obtained shall be reported to the Department.

(B) Women Business Enterprises **3.0 %**

(1) *If the WBE goal is more than zero*, the Contractor shall exercise all necessary and reasonable steps to ensure that WBEs participate in at least the percent of the contract as set forth above as the WBE goal.

(2) *If the WBE goal is zero*, the Contractor shall make an effort to recruit and use WBEs during the performance of the contract. Any WBE participation obtained shall be reported to the Department.

Directory of Transportation Firms (Directory)

Real-time information is available about firms doing business with the Department and firms that are certified through NCUCP in the Directory of Transportation Firms. Only firms identified in the Directory as MBE and WBE certified shall be used to meet the MBE and WBE goals respectively. The Directory can be found at the following link. https:// www.ebs.nc.gov/VendorDirectory/default.html

The listing of an individual firm in the directory shall not be construed as an endorsement of the firm's capability to perform certain work.

Listing of MBE/WBE Subcontractors

At the time of bid, bidders shall submit <u>all</u> MBE and WBE participation that they anticipate to use during the life of the contract. Only those identified to meet the MBE goal and the WBE goal will be considered committed, even though the listing shall include both committed MBE/WBE subcontractors and additional MBE/WBE subcontractors. Any additional MBE/WBE subcontractor participation above the goal for which letters of intent are received will follow the banking guidelines found elsewhere in this provision. All other additional MBE/WBE subcontractor participation submitted at the time of bid will be used toward the Department's overall race-neutral goals. Only those firms with current MBE and WBE certification at the time of bid opening will be acceptable for listing in the bidder's submittal of MBE and WBE participation. The Contractor shall indicate the following required information:

(A) Electronic Bids

Bidders shall submit a listing of MBE and WBE participation in the appropriate section of Expedite, the bidding software of Bid Express®.

(1) Submit the names and addresses of MBE and WBE firms identified to participate in the contract. If the bidder uses the updated listing of MBE and WBE firms shown in Expedite, the bidder may use the dropdown menu to access the name and address of the firms.

(2) Submit the contract line numbers of work to be performed by each MBE and WBE firm. When no figures or firms are entered, the bidder will be considered to have no MBE or WBE participation.

(3) The bidder shall be responsible for ensuring that the MBE and WBE are certified at the time of bid by checking the Directory of Transportation Firms. If the firm is not certified at the time of the bid-letting, that MBE's or WBE's participation will not count towards achieving either the MBE or WBE goal.

(B) Paper Bids

(1) *If either the MBE or WBE goal is more than zero,*

(a) Bidders, at the time the bid proposal is submitted, shall submit a listing of MBE/WBE participation, including the names and addresses on *Listing of MBE and WBE Subcontractors* contained elsewhere in the contract documents in order for the bid to be considered responsive. Bidders shall indicate the total dollar value of the MBE and WBE participation for the contract.

(b) If bidders have no MBE or WBE participation, they shall indicate this on the *Listing of MBE and WBE Subcontractors* by entering the word "None" or the number "0." This form shall be completed in its entirety. **Blank forms will not be deemed to represent zero participation.** Bids submitted that do not have MBE and WBE participation indicated on the appropriate form will not be read publicly during the opening of bids. The Department will not consider these bids for award and the proposal will be rejected.

(c) The bidder shall be responsible for ensuring that the MBE/WBE is certified at the time of bid by checking the Directory of Transportation Firms. If the firm is not certified at the time of the bid-letting, that MBE's or WBE's participation will not count towards achieving the corresponding goal.

(2) *If either the MBE or WBE goal is zero,* entries on the *Listing of MBE and WBE Subcontractors* are not required for the zero goal, however any MBE or WBE

participation that is achieved during the project shall be reported in accordance with requirements contained elsewhere in the special provision.

MBE or WBE Prime Contractor

When a certified MBE or WBE firm bids on a contract that contains MBE and WBE goals, the firm is responsible for meeting the goals or making good faith efforts to meet the goals, just like any other bidder. In most cases, a MBE or WBE bidder on a contract will meet one of the goals by virtue of the work it performs on the contract with its own forces. However, all the work that is performed by the MBE or WBE bidder and any other similarly certified subcontractors will count toward the goal. The MBE or WBE bidder shall list itself along with any MBE or WBE subcontractors, if any, in order to receive credit toward the goals.

For example, on a proposed contract, the WBE goal is 10%, and the MBE goal is 8%. A WBE bidder puts in a bid where they will perform 40% of the contract work and have a WBE subcontractor which will perform another 5% of the work. Together the two WBE firms submit on the *Listing of MBE and WBE Subcontractors* a value of 45% of the contract which fulfills the WBE goal. The 8% MBE goal shall be obtained through MBE participation with MBE certified subcontractors or documented through a good faith effort. It should be noted that you cannot combine the two goals to meet an overall value. The two goals shall remain separate.

MBE/WBE prime contractors shall also follow Sections A and B listed under *Listing of MBE and WBE Subcontractor* just as a non-MBE/WBE bidder would.

Written Documentation – Letter of Intent

The bidder shall submit written documentation for each MBE/WBE that will be used to meet the MBE and WBE goals of the contract, indicating the bidder's commitment to use the MBE/WBE in the contract. This documentation shall be submitted on the Department's form titled *Letter of Intent*.

The documentation shall be received in the office of the State Contractor Utilization Engineer or at DBE@ncdot.gov no later than 10:00 a.m. of the sixth calendar day following opening of bids, unless the sixth day falls on an official state holiday. In that situation, it is due in the office of the State Contractor Utilization Engineer no later than 10:00 a.m. on the next official state business day.

If the bidder fails to submit the Letter of Intent from each committed MBE and WBE to be used toward the MBE and WBE goals, or if the form is incomplete (i.e. both signatures are not present), the MBE/WBE participation will not count toward meeting the MBE/WBE goal. If the lack of this participation drops the commitment below either the MBE or WBE goal, the Contractor shall submit evidence of good faith efforts for the goal not met, completed in its entirety, to the State Contractor Utilization Engineer or DBE@ncdot.gov no later than 10:00 a.m. on the eighth calendar day following opening of bids, unless the eighth day falls on an official state holiday. In that situation, it is due in the office of the State Contractor Utilization Engineer no later than 10:00 a.m. on the next official state business day.

Banking MBE/WBE Credit

If the bid of the lowest responsive bidder exceeds $500,000 and if the committed MBE/WBE participation submitted by Letter of Intent exceeds the algebraic sum of the MBE or WBE goal by $1,000 or more, the excess will be placed on deposit by the Department for future use by the bidder. Separate accounts will be maintained for MBE and WBE participation and these may accumulate for a period not to exceed 24 months.

When the apparent lowest responsive bidder fails to submit sufficient participation by MBE firms to meet the contract goal, as part of the good faith effort, the Department will consider allowing the bidder to withdraw funds to meet the MBE goal as long as there are adequate funds available from the bidder's MBE bank account.

When the apparent lowest responsive bidder fails to submit sufficient participation by WBE firms to meet the contract goal, as part of the good faith effort, the Department will consider allowing the bidder to withdraw funds to meet the WBE goal as long as there are adequate funds available from the bidder's WBE bank account.

Submission of Good Faith Effort

If the bidder fails to meet or exceed either the MBE or the WBE goal, the apparent lowest responsive bidder shall submit to the Department documentation of adequate good faith efforts made to reach that specific goal(s).

A hard copy and an electronic copy of this information shall be received in the office of the State Contractor Utilization Engineer or at DBE@ncdot.gov no later than 10:00 a.m. on the sixth calendar day following opening of bids unless the sixth day falls on an official state holiday. In that situation, it would be due in the office of the State Contractor Utilization Engineer no later than 10:00 a.m. on the next official state business day. If the contractor cannot send the information electronically, then one complete set and 9 copies of this information shall be received under the same time constraints above.

Note: Where the information submitted includes repetitious solicitation letters, it will be acceptable to submit a representative letter along with a distribution list of the firms that were solicited. Documentation of MBE/WBE quotations shall be a part of the good faith effort submittal. This documentation may include written subcontractor quotations, telephone log notations of verbal quotations, or other types of quotation documentation.

Consideration of Good Faith Effort for Projects with MBE/WBE Goals More Than Zero

Adequate good faith efforts mean that the bidder took all necessary and reasonable steps to achieve the goal which, by their scope, intensity, and appropriateness, could reasonably be expected to obtain sufficient MBE/WBE participation. Adequate good faith efforts also mean that the bidder actively and aggressively sought MBE/WBE participation. Mere *pro forma* efforts are not considered good faith efforts.

The Department will consider the quality, quantity, and intensity of the different kinds of efforts a bidder has made. Listed below are examples of the types of actions a bidder will take in making a good faith effort to meet the goals and are not intended to be exclusive or exhaustive, nor is it intended to be a mandatory checklist.

(A) Soliciting through all reasonable and available means (e.g. attendance at pre-bid meetings, advertising, written notices, use of verifiable electronic means through the use of the NCDOT Directory of Transportation Firms) the interest of all certified MBEs/WBEs that are also prequalified subcontractors. The bidder must solicit this interest within at least 10 days prior to bid opening to allow the MBEs/WBEs to respond to the solicitation. Solicitation shall provide the opportunity to MBEs/WBEs within the Division and surrounding Divisions where the project is located. The bidder must determine with certainty if the MBEs/WBEs are interested by taking appropriate steps to follow up initial solicitations.

(B) Selecting portions of the work to be performed by MBEs/WBEs in order to increase the likelihood that the MBE and WBE goals will be achieved.

(1) Where appropriate, break out contract work items into economically feasible units to facilitate MBE/WBE participation, even when the prime contractor might otherwise prefer to perform these work items with its own forces.

(2) Negotiate with subcontractors to assume part of the responsibility to meet the contract MBE/WBE goals when the work to be sublet includes potential for MBE/WBE participation (2nd and 3rd tier subcontractors).

(C) Providing interested certified MBEs/WBEs that are also prequalified subcontractors with adequate information about the plans, specifications, and requirements of the contract in a timely manner to assist them in responding to a solicitation.

(D) (1) Negotiating in good faith with interested MBEs/WBEs. It is the bidder's responsibility to make a portion of the work available to MBE/WBE subcontractors and suppliers and to select those portions of the work or material needs consistent with the available MBE/WBE subcontractors and suppliers, so as to facilitate MBE/WBE participation. Evidence of such negotiation includes the names, addresses, and telephone numbers of MBEs/WBEs that were considered; a description of the information provided regarding the plans and specifications for the work selected for subcontracting; and evidence as to why additional agreements could not be reached for MBEs/WBEs to perform the work.

(2) A bidder using good business judgment would consider a number of factors in negotiating with subcontractors, including MBE/WBE subcontractors, and would take a firm's price and capabilities as well as contract goals into consideration. However, the fact that there may be some additional costs involved in finding and using MBEs/WBEs is not in itself sufficient reason for a bidder's failure to meet the contract MBE or WBE goals, as long as such costs are reasonable. Also, the ability or desire of a prime contractor to perform the work of a contract with its own organization does not relieve the bidder of the responsibility

to make good faith efforts. Bidding contractors are not, however, required to accept higher quotes from MBEs/WBEs if the price difference is excessive or unreasonable.

(E) Not rejecting MBEs/WBEs as being unqualified without sound reasons based on a thorough investigation of their capabilities. The bidder's standing within its industry, membership in specific groups, organizations, or associates and political or social affiliations (for example, union vs. non-union employee status) are not legitimate causes for the rejection or non-solicitation of bids in the bidder's efforts to meet the project goal.

(F) Making efforts to assist interested MBEs/WBEs in obtaining bonding, lines of credit, or insurance as required by the recipient or bidder.

(G) Making efforts to assist interested MBEs/WBEs in obtaining necessary equipment, supplies, materials, or related assistance or services.

(H) Effectively using the services of available minority/women community organizations; minority/women contractors' groups; Federal, State, and local minority/women business assistance offices; and other organizations as allowed on a case-by-case basis to provide assistance in the recruitment and placement of MBEs/WBEs. Contact within 7 days from the bid opening the Business Opportunity and Work Force Development Unit at DBE@ncdot.gov to give notification of the bidder's inability to get MBE or WBE quotes.

(I) Any other evidence that the bidder submits which shows that the bidder has made reasonable good faith efforts to meet the MBE and WBE goal.

In addition, the Department may take into account the following:

(1) Whether the bidder's documentation reflects a clear and realistic plan for achieving the MBE and WBE goals.

(2) The bidders' past performance in meeting the MBE and WBE goals.

(3) The performance of other bidders in meeting the MBE and WBE goals. For example, when the apparent successful bidder fails to meet the goals, but others meet it, you may reasonably raise the question of whether, with additional reasonable efforts the apparent successful bidder could have met the goals. If the apparent successful bidder fails to meet the MBE and WBE goals, but meets or exceeds the average MBE and WBE participation obtained by other bidders, the Department may view this, in conjunction with other factors, as evidence of the apparent successful bidder having made a good faith effort.

If the Department does not award the contract to the apparent lowest responsive bidder, the Department reserves the right to award the contract to the next lowest responsive bidder that can satisfy to the Department that the MBE and WBE goals can be met or that an adequate good faith effort has been made to meet the MBE and WBE goals.

Non-Good Faith Appeal

The State Contractual Services Engineer will notify the contractor verbally and in writing of non-good faith. A contractor may appeal a determination of non-good faith made by the Goal Compliance Committee. If a contractor wishes to appeal the determination made by the Committee, they shall provide written notification to the State Contractual Services Engineer or at DBE@ncdot.gov. The appeal shall be made within 2 business days of notification of the determination of non-good faith.

Counting MBE/WBE Participation Toward Meeting MBE/WBE Goals

(A) Participation

The total dollar value of the participation by a committed MBE/WBE will be counted toward the contract goal requirements. The total dollar value of participation by a committed MBE/WBE will be based upon the value of work actually performed by the MBE/WBE and the actual payments to MBE/WBE firms by the Contractor.

(B) Joint Checks

Prior notification of joint check use shall be required when counting MBE/WBE participation for services or purchases that involves the use of a joint check. Notification shall be through submission of Form JC-1 *(Joint Check Notification Form)* and the use of joint checks shall be in accordance with the Department's Joint Check Procedures.

(C) Subcontracts (Non-Trucking)

A MBE/WBE may enter into subcontracts. Work that a MBE subcontracts to another MBE firm may be counted toward the MBE contract goal requirement. The same holds for work that a WBE subcontracts to another WBE firm. Work that a MBE subcontracts to a non-MBE firm does <u>not</u> count toward the MBE contract goal requirement. Again, the same holds true for the work that a WBE subcontracts to a non-WBE firm. If a MBE or WBE contractor or subcontractor subcontracts a significantly greater portion of the work of the contract than would be expected on the basis of standard industry practices, it shall be presumed that the MBE or WBE is not performing a commercially useful function. The MBE/WBE may present evidence to rebut this presumption to the Department. The Department's decision on the rebuttal of this presumption may be subject to review by the Office of Inspector General, NCDOT.

(D) Joint Venture

When a MBE or WBE performs as a participant in a joint venture, the Contractor may count toward its contract goal requirement a portion of the total value of participation with the MBE or WBE in the joint venture, that portion of the total dollar value being a distinct clearly defined portion of work that the MBE or WBE performs with its forces.

(E) Suppliers

A contractor may count toward its MBE or WBE requirement 60 percent of its expenditures for materials and supplies required to complete the contract and obtained from a MBE or WBE regular dealer and 100 percent of such expenditures from a MBE or WBE manufacturer.

(F) Manufacturers and Regular Dealers

A contractor may count toward its MBE or WBE requirement the following expenditures to MBE/WBE firms that are not manufacturers or regular dealers:

(1) The fees or commissions charged by a MBE/WBE firm for providing a *bona fide* service, such as professional, technical, consultant, or managerial services, or for providing bonds or insurance specifically required for the performance of a DOT-assisted contract, provided the fees or commissions are determined to be reasonable and not excessive as compared with fees and commissions customarily allowed for similar services.

(2) With respect to materials or supplies purchased from a MBE/WBE, which is neither a manufacturer nor a regular dealer, count the entire amount of fees or commissions charged for assistance in the procurement of the materials and supplies, or fees or transportation charges for the delivery of materials or supplies required on a job site (but not the cost of the materials and supplies themselves), provided the fees are determined to be reasonable and not excessive as compared with fees customarily allowed for similar services.

Commercially Useful Function

(A) MBE/WBE Utilization

The Contractor may count toward its contract goal requirement only expenditures to MBEs and WBEs that perform a commercially useful function in the work of a contract. A MBE/WBE performs a commercially useful function when it is responsible for execution of the work of the contract and is carrying out its responsibilities by actually performing, managing, and supervising the work involved. To perform a commercially useful function, the MBE/WBE shall also be responsible with respect to materials and supplies used on the contract, for negotiating price, determining quality and quantity, ordering the material and installing (where applicable) and paying for the material itself. To determine whether a MBE/WBE is performing a commercially useful function, the Department will evaluate the amount of work subcontracted, industry practices, whether the amount the firm is to be paid under the contract is commensurate with the work it is actually performing and the MBE/WBE credit claimed for its performance of the work, and any other relevant factors.

(B) MBE/WBE Utilization in Trucking

The following factors will be used to determine if a MBE or WBE trucking firm is performing a commercially useful function:

(1) The MBE/WBE shall be responsible for the management and supervision of the entire trucking operation for which it is responsible on a particular contract, and there shall not be a contrived arrangement for the purpose of meeting the MBE or WBE goal.

(2) The MBE/WBE shall itself own and operate at least one fully licensed, insured, and operational truck used on the contract.

(3) The MBE/WBE receives credit for the total value of the transportation services it provides on the contract using trucks it owns, insures, and operates using drivers it employs.

(4) The MBE may subcontract the work to another MBE firm, including an owner-operator who is certified as a MBE. The same holds true that a WBE may subcontract the work to another WBE firm, including an owner-operator who is certified as a WBE. When this occurs, the MBE or WBE who subcontracts work receives credit for the total value of the transportation services the subcontracted MBE or WBE provides on the contract. It should be noted that every effort shall be made by MBE and WBE contractors to subcontract to the same certification (i.e., MBEs to MBEs and WBEs to WBEs), in order to fulfill the goal requirement. This, however, may not always be possible due to the limitation of firms in the area. If the MBE or WBE firm shows a good faith effort has been made to reach out to similarly certified transportation service providers and there is no interest or availability, and they can get assistance from other certified providers, the Engineer will not hold the prime liable for meeting the goal.

(5) The MBE/WBE may also subcontract the work to a non-MBE/WBE firm, including from an owner-operator. The MBE/WBE who subcontracts the work to a non-MBE/WBE is entitled to credit for the total value of transportation services provided by the non-MBE/WBE subcontractor not to exceed the value of transportation services provided by MBE/WBE-owned trucks on the contract. Additional participation by non-MBE/WBE subcontractors receives credit only for the fee or commission it receives as a result of the subcontract arrangement. The value of services performed under subcontract agreements between the MBE/WBE and the Contractor will not count towards the MBE/WBE contract requirement.

(6) A MBE/WBE may lease truck(s) from an established equipment leasing business open to the general public. The lease must indicate that the MBE/WBE has exclusive use of and control over the truck. This requirement does not preclude the leased truck from working for others during the term of the lease with the consent of the MBE/WBE, so long as the lease gives the MBE/WBE absolute priority for use of the leased truck. This type of lease may count toward the MBE/WBE's credit as long as the driver is under the MBE/WBE's payroll.

(7) Subcontracted/leased trucks shall display clearly on the dashboard the name of the MBE/WBE that they are subcontracted/leased to and their own company name if it is not identified on the truck itself. Magnetic door signs are not permitted.

MBE/WBE Replacement

When a Contractor has relied on a commitment to a MBE or WBE firm (or an approved substitute MBE or WBE firm) to meet all or part of a contract goal requirement, the contractor shall not terminate the MBE/WBE for convenience. This includes, but is not limited to, instances in which the Contractor seeks to perform the work of the terminated subcontractor with another MBE/WBE subcontractor, a non-MBE/WBE subcontractor, or with the Contractor's own forces or those of an affiliate. A MBE/WBE may only be terminated after receiving the Engineer's written approval based upon a finding of good cause for the termination. The prime contractor must give the MBE/WBE firm five (5) calendar days to respond to the prime contractor's notice of termination and advise the prime contractor and the Department of the reasons, if any, why the firm objects to the proposed termination of its subcontract and why the Department should not approve the action. All requests for replacement of a committed MBE/WBE firm shall be submitted to the Engineer for approval on Form RF-1 *(Replacement Request).* If the Contractor fails to follow this procedure, the Contractor may be disqualified from further bidding for a period of up to 6 months.

The Contractor shall comply with the following for replacement of a committed MBE/WBE:

(A) Performance Related Replacement

When a committed MBE is terminated for good cause as stated above, an additional MBE that was submitted at the time of bid may be used to fulfill the MBE commitment. The same holds true if a committed WBE is terminated for good cause, an additional WBE that was submitted at the time of bid may be used to fulfill the WBE goal. A good faith effort will only be required for removing a committed MBE/WBE if there were no additional MBEs/WBEs submitted at the time of bid to cover the same amount of work as the MBE/WBE that was terminated.

If a replacement MBE/WBE is not found that can perform at least the same amount of work as the terminated MBE/WBE, the Contractor shall submit a good faith effort documenting the steps taken. Such documentation shall include, but not be limited to, the following:

(1) Copies of written notification to MBEs/WBEs that their interest is solicited in contracting the work defaulted by the previous MBE/WBE or in subcontracting other items of work in the contract.

(2) Efforts to negotiate with MBEs/WBEs for specific subbids including, at a minimum:

(a) The names, addresses, and telephone numbers of MBEs/WBEs who were contacted.
(b) A description of the information provided to MBEs/WBEs regarding the plans and specifications for portions of the work to be performed.

(3) A list of reasons why MBE/WBE quotes were not accepted.

(4) Efforts made to assist the MBEs/WBEs contacted, if needed, in obtaining bonding or insurance required by the Contractor.

(B) Decertification Replacement

(1) When a committed MBE/WBE is decertified by the Department after the SAF (*Subcontract Approval Form*) has been received by the Department, the Department will not require the Contractor to solicit replacement MBE/WBE participation equal to the remaining work to be performed by the decertified firm. The participation equal to the remaining work performed by the decertified firm will count toward the contract goal requirement.

(2) When a committed MBE/WBE is decertified prior to the Department receiving the SAF (*Subcontract Approval Form*) for the named MBE/WBE firm, the Contractor shall take all necessary and reasonable steps to replace the MBE/WBE subcontractor with another similarly certified MBE/WBE subcontractor to perform at least the same amount of work to meet the MBE/WBE goal requirement. If a MBE/WBE firm is not found to do the same amount of work, a good faith effort must be submitted to NCDOT (see A herein for required documentation).

Changes in the Work

When the Engineer makes changes that result in the reduction or elimination of work to be performed by a committed MBE/WBE, the Contractor will not be required to seek additional participation. When the Engineer makes changes that result in additional work to be performed by a MBE/WBE based upon the Contractor's commitment, the MBE/WBE shall participate in additional work to the same extent as the MBE/WBE participated in the original contract work.

When the Engineer makes changes that result in extra work, which has more than a minimal impact on the contract amount, the Contractor shall seek additional participation by MBEs/WBEs unless otherwise approved by the Engineer.

When the Engineer makes changes that result in an alteration of plans or details of construction, and a portion or all of the work had been expected to be performed by a committed MBE/WBE, the Contractor shall seek participation by MBEs/WBEs unless otherwise approved by the Engineer.

When the Contractor requests changes in the work that result in the reduction or elimination of work that the Contractor committed to be performed by a MBE/WBE, the Contractor shall seek additional participation by MBEs/WBEs equal to the reduced MBE/WBE participation caused by the changes.

Reports and Documentation

A SAF (*Subcontract Approval Form*) shall be submitted for all work which is to be performed by a MBE/WBE subcontractor. The Department reserves the right to require copies of actual subcontract agreements involving MBE/WBE subcontractors.

When using transportation services to meet the contract commitment, the Contractor shall submit a proposed trucking plan in addition to the SAF. The plan shall be submitted prior to beginning construction on the project. The plan shall include the names of all trucking firms proposed for use, their certification type(s), the number of trucks owned by the firm, as well as the individual truck identification numbers, and the line item(s) being performed.

Within 30 calendar days of entering into an agreement with a MBE/WBE for materials, supplies or services, not otherwise documented by the SAF as specified above, the Contractor shall furnish the Engineer a copy of the agreement. The documentation shall also indicate the percentage (60% or 100%) of expenditures claimed for MBE/WBE credit.

Reporting Minority and Women Business Enterprise Participation

The Contractor shall provide the Engineer with an accounting of payments made to all MBE and WBE firms, including material suppliers and contractors at all levels (prime, subcontractor, or second tier subcontractor). This accounting shall be furnished to the Engineer for any given month by the end of the following month. Failure to submit this information accordingly may result in the following action:

(A) Withholding of money due in the next partial pay estimate; or

(B) Removal of an approved contractor from the prequalified bidders' list or the removal of other entities from the approved subcontractors list.

While each contractor (prime, subcontractor, 2nd tier subcontractor) is responsible for accurate accounting of payments to MBEs/WBEs, it shall be the prime contractor's responsibility to report all monthly and final payment information in the correct reporting manner.

Failure on the part of the Contractor to submit the required information in the time frame specified may result in the disqualification of that contractor and any affiliate companies from further bidding until the required information is submitted.

Failure on the part of any subcontractor to submit the required information in the time frame specified may result in the disqualification of that contractor and any affiliate companies from being approved for work on future DOT projects until the required information is submitted.

Contractors reporting transportation services provided by non-MBE/WBE lessees shall evaluate the value of services provided during the month of the reporting period only.

At any time, the Engineer can request written verification of subcontractor payments.

The Contractor shall report the accounting of payments through the Department's Payment Tracking System.

Failure to Meet Contract Requirements

Failure to meet contract requirements in accordance with Subarticle 102-15(J) of the *2012 Standard Specifications* may be cause to disqualify the Contractor.

CONTRACTOR'S LICENSE REQUIREMENTS:
(7-1-95) 102-14 SP1 G88

If the successful bidder does not hold the proper license to perform any plumbing, heating, air conditioning, or electrical work in this contract, he will be required to sublet such work to a contractor properly licensed in accordance with *Article 2 of Chapter 87 of the General Statutes* (licensing of heating, plumbing, and air conditioning contractors) and *Article 4 of Chapter 87* of the *General Statutes* (licensing of electrical contractors).

SUBSURFACE INFORMATION:
(7-1-95) 450 SP1 G112 C

Subsurface information is available on the structure portion of this project only.

LOCATING EXISTING UNDERGROUND UTILITIES:
(3-20-12) 105 SP1 G115

Revise the *2012 Standard Specifications* as follows:

Page 1-43, Article 105-8, line 28, after the first sentence, add the following:

Identify excavation locations by means of pre-marking with white paint, flags, or stakes or provide a specific written description of the location in the locate request.

VALUE ENGINEERING PROPOSAL:
(05-19-15) 104 SP01 G116

Revise the *2012 Standard Specifications* as follows:

Page 1-36, Subarticle 104-12(B) Evaluation of Proposals, lines 42-44, replace the fourth sentence of the second paragraph with the following:

Pending execution of a formal supplemental agreement implementing an approved VEP and transferal of final plans (hard copy and electronic) sealed by an engineer licensed in the State of North Carolina incorporating an approved VEP to the Resident Engineer and the State Value Management Engineer, the Contractor shall remain obligated to perform the work in accordance with the terms of the existing contract.

Page 1-37, Subarticle 104-12(D) Preliminary Review, lines 9-12, replace the first sentence of the first paragraph with the following:

Should the Contractor desire a preliminary review of a possible VEP, before expending considerable time and expense in full development, a copy of the Preliminary VEP shall be

submitted to the Resident Engineer and the State Value Management Engineer at ValueManagementUnit@ncdot.gov.

Page 1-37, Subarticle 104-12(E) Final Proposal, lines 22-23, replace the first sentence of the first paragraph with the following:

A copy of the Final VEP shall be submitted by the Contractor to the Resident Engineer and the State Value Management Engineer at ValueManagementUnit@ncdot.gov.

Page 1-38, Subarticle 104-12(F) Modifications, lines 2-8, replace the first paragraph with the following:

To facilitate the preparation of revisions to contract drawings, the Contractor may purchase reproducible copies of drawings for his use through the Department's Value Management Unit. The preparation of new design drawings by or for the Contractor shall be coordinated with the appropriate Design Branch through the State Value Management Engineer. The Contractor shall provide, at no charge to the Department, one set of reproducible drawings of the approved design needed to implement the VEP. Drawings (hard copy and electronic) which are sealed by an engineer licensed in the State of North Carolina shall be submitted to the State Value Management Engineer no later than ten (10) business days after acceptance of a VEP unless otherwise permitted.

Page 1-38, Subarticle 104-12(F) Modifications, line 17, add the following at the end of the third paragraph:

Supplemental agreements executed for design-bid-build contracts shall reflect any realized savings in the corresponding line items. Supplemental agreements executed for design-build contracts shall add one line item deducting the full savings from the total contract price and one line item crediting the Contractor with 50% of the total VEP savings.

Page 1-38, Subarticle 104-12(F) Modifications, lines 45-47, replace the eighth paragraph with the following:

Unless and until a supplemental agreement is executed and issued by the Department and final plans (hard copy and electronic) sealed by an engineer licensed in the State of North Carolina incorporating an approved VEP have been provided to the Resident Engineer and the State Value Management Engineer, the Contractor shall remain obligated to perform the work in accordance with the terms of the existing contract.

RESOURCE CONSERVATION AND ENV. SUSTAINABLE PRACTICES:

(5-21-13) (Rev. 5-19-15) 104-13 SP1 G118

In accordance with North Carolina Executive Order 156, NCGS 130A-309.14(3), and NCGS 136-28.8, it is the objective of the Department to aid in the reduction of materials that become a part of our solid waste stream, to divert materials from landfills, to find ways to recycle and reuse materials, to consider and minimize, where economically feasible, the environmental impacts associated with agency land use and acquisition, construction, maintenance and facility management for the benefit of the Citizens of North Carolina.

To achieve the mission of reducing environmental impacts across the state, the Department is committed to supporting the efforts to initiate, develop and use products and construction methods that incorporate the use of recycled, solid waste products and environmentally sustainable practices in accordance with Article 104-13 of the *Standard Specifications*.

Report the quantities of reused or recycled materials either incorporated in the project or diverted from landfills and any practice that minimizes the environmental impact on the project annually on the Project Construction Reuse and Recycling Reporting Form. The Project Construction Reuse and Recycling Reporting Form and a location tool for local recycling facilities are available at:
http://connect.ncdot.gov/resources/Environmental/Pages/North-Carolina-Recycling-Locations.aspx.

Submit the Project Construction Reuse and Recycling Reporting Form by August 1 annually to valuemanagementunit@ncdot.gov. For questions regarding the form or reporting, please contact the State Value Management Engineer at 919-707-4810.

DOMESTIC STEEL:

(4-16-13) 106 SP1 G120

Revise the *2012 Standard Specifications* as follows:

P**age 1-49, Subarticle 106-1(B) Domestic Steel, lines 2-7,** replace the first paragraph with the following:

All steel and iron products that are permanently incorporated into this project shall be produced in the United States except minimal amounts of foreign steel and iron products may be used provided the combined material cost of the items involved does not exceed 0.1% of the total amount bid for the entire project or $2,500, whichever is greater. If invoices showing the cost of the material are not provided, the amount of the bid item involving the foreign material will be used for calculations. This minimal amount of foreign produced steel and iron products permitted for use is not applicable to high strength fasteners. Domestically produced high strength fasteners are required.

PORTABLE CONCRETE BARRIER - (Partial Payments for Materials):

(7-1-95) (Rev. 8-16-11) 1170-4 SP1 G121

When so authorized by the Engineer, partial materials payments will be made up to 95 percent of the delivered cost of portable concrete barrier, provided that these materials have been delivered on the project and stored in an acceptable manner, and further provided the documents listed in Subarticle 109-5(C) of the *2012 Standard Specifications* have been furnished to the Engineer.

The provisions of Subarticle 109-5(B) of the *2012 Standard Specifications* will apply to the portable concrete barrier.

MAINTENANCE OF THE PROJECT:

(11-20-07) (Rev. 1-17-12) 104-10 SP1 G125

Revise the *2012 Standard Specifications* as follows:

Page 1-35, Article 104-10 Maintenance of the Project, line 25, add the following after the first sentence of the first paragraph:

All guardrail/guiderail within the project limits shall be included in this maintenance.

Page 1-35, Article 104-10 Maintenance of the Project, line 30, add the following as the last sentence of the first paragraph:

The Contractor shall perform weekly inspections of guardrail and guiderail and shall report damages to the Engineer on the same day of the weekly inspection. *Where damaged guardrail or guiderail is repaired or replaced as a result of maintaining the project in* accordance with this article, such repair or replacement shall be performed within 7 consecutive calendar days of such inspection report.

Page 1-35, Article 104-10 Maintenance of the Project, lines 42-44, replace the last sentence of the last paragraph with the following:

The Contractor will not be directly compensated for any maintenance operations necessary, except for maintenance of guardrail/guiderail, as this work will be considered incidental to the work covered by the various contract items. The provisions of Article 104-7, Extra Work, and Article 104-8, Compensation and Record Keeping will apply to authorized maintenance of guardrail/guiderail. Performance of weekly inspections of guardrail/guiderail, and the damage reports required as described above, will be considered to be an incidental part of the work being paid for by the various contract items.

COOPERATION BETWEEN CONTRACTORS:

(7-1-95) 105-7 SP1 G133

The Contractor's attention is directed to Article 105-7 of the *2012 Standard Specifications*.

B-5123 (C203889) is currently under construction and located in the vicinity of this project.

EB-5732 is anticipated for a February 20, 2019 Letting and located in the vicinity of this project.

U-4910A / U-4910B (C203661) is currently under construction and located in the vicinity of this project.

The Contractor on this project shall cooperate with the Contractor working within or adjacent to the limits of this project to the extent that the work can be carried out to the best advantage of all concerned.

TWELVE MONTH GUARANTEE:

(7-15-03) 108 SP1 G145

(A) The Contractor shall guarantee materials and workmanship against latent and patent defects arising from faulty materials, faulty workmanship or negligence for a period of twelve months following the date of final acceptance of the work for maintenance and shall replace such defective materials and workmanship without cost to the Department. The Contractor will not be responsible for damage due to faulty design, normal wear and tear, for negligence on the part of the Department, and/or for use in excess of the design.

(B) Where items of equipment or material carry a manufacturer's guarantee for any period in excess of twelve months, then the manufacturer's guarantee shall apply for that particular piece of equipment or material. The Department's first remedy shall be through the manufacturer although the Contractor is responsible for invoking the warranted repair work with the manufacturer. The Contractor's responsibility shall be limited to the term of the manufacturer's guarantee. NCDOT would be afforded the same warranty as provided by the Manufacturer.

This guarantee provision shall be invoked only for major components of work in which the Contractor would be wholly responsible for under the terms of the contract. Examples would include pavement structures, bridge components, and sign structures. This provision will not be used as a mechanism to force the Contractor to return to the project to make repairs or perform additional work that the Department would normally compensate the Contractor for. In addition, routine maintenance activities (i.e. mowing grass, debris removal, ruts in earth shoulders,) are not parts of this guarantee.

Appropriate provisions of the payment and/or performance bonds shall cover this guarantee for the project.

To ensure uniform application statewide the Division Engineer will forward details regarding the circumstances surrounding any proposed guarantee repairs to the Chief Engineer for review and approval prior to the work being performed.

OUTSOURCING OUTSIDE THE USA:

(9-21-04) (Rev. 5-16-06) SP1 G150

All work on consultant contracts, services contracts, and construction contracts shall be performed in the United States of America. No work shall be outsourced outside of the United States of America.

Outsourcing for the purpose of this provision is defined as the practice of subcontracting labor, work, services, staffing, or personnel to entities located outside of the United States.

The North Carolina Secretary of Transportation shall approve exceptions to this provision in writing.

GIFTS FROM VENDORS AND CONTRACTORS:

(12-15-09) 107-1 SP1 G152

By Executive Order 24, issued by Governor Perdue, and *N.C.G.S.§ 133-32,* it is unlawful for any vendor or contractor (i.e. architect, bidder, contractor, construction manager, design professional, engineer, landlord, offeror, seller, subcontractor, supplier, or vendor), to make gifts or to give favors to any State employee of the Governor's Cabinet Agencies (i.e. Administration, Commerce, Correction, Crime Control and Public Safety, Cultural Resources, Environment and Natural Resources, Health and Human Services, Juvenile Justice and Delinquency Prevention, Revenue, Transportation, and the Office of the Governor). This prohibition covers those vendors and contractors who:

(A) Have a contract with a governmental agency; or
(B) Have performed under such a contract within the past year; or
(C) Anticipate bidding on such a contract in the future.

For additional information regarding the specific requirements and exemptions, vendors and contractors are encouraged to review Executive Order 24 and *N.C.G.S. § 133-32*.

Executive Order 24 also encouraged and invited other State Agencies to implement the requirements and prohibitions of the Executive Order to their agencies. Vendors and contractors should contact other State Agencies to determine if those agencies have adopted Executive Order 24.

LIABILITY INSURANCE:

(5-20-14) SP1 G160

Revise the *2012 Standard Specifications* as follows:

Page 1-60, Article 107-15 LIABILITY INSURANCE, line 16, add the following as the second sentence of the third paragraph:

Prior to beginning services, all contractors shall provide proof of coverage issued by a workers' compensation insurance carrier, or a certificate of compliance issued by the Department of Insurance for self-insured subcontractors, irrespective of whether having regularly in service fewer than three employees.

EROSION AND SEDIMENT CONTROL/STORMWATER CERTIFICATION:

(1-16-07) (Rev 11-22-16) 105-16, 225-2, 16 SP1 G180

General

Schedule and conduct construction activities in a manner that will minimize soil erosion and the resulting sedimentation and turbidity of surface waters. Comply with the requirements herein regardless of whether or not a National Pollution discharge Elimination System (NPDES) permit for the work is required.

Establish a chain of responsibility for operations and subcontractors' operations to ensure that the *Erosion and Sediment Control/Stormwater Pollution Prevention Plan* is implemented and maintained over the life of the contract.

(A) *Certified Supervisor* - Provide a certified Erosion and Sediment Control/Stormwater Supervisor to manage the Contractor and subcontractor operations, insure compliance with Federal, State and Local ordinances and regulations, and manage the Quality Control Program.

(B) *Certified Foreman* - Provide a certified, trained foreman for each construction operation that increases the potential for soil erosion or the possible sedimentation and turbidity of surface waters.

(C) *Certified Installer* - Provide a certified installer to install or direct the installation for erosion or sediment/stormwater control practices.

(D) *Certified Designer* - Provide a certified designer for the design of the erosion and sediment control/stormwater component of reclamation plans and, if applicable, for the design of the project erosion and sediment control/stormwater plan.

Roles and Responsibilities

(A) *Certified Erosion and Sediment Control/Stormwater Supervisor* - The Certified Supervisor shall be Level II and responsible for ensuring the erosion and sediment control/stormwater plan is adequately implemented and maintained on the project and for conducting the quality control program. The Certified Supervisor shall be on the project within 24 hours notice from initial exposure of an erodible surface to the project's final acceptance. Perform the following duties:

(1) Manage Operations - Coordinate and schedule the work of subcontractors so that erosion and sediment control/stormwater measures are fully executed for each operation and in a timely manner over the duration of the contract.

(a) Oversee the work of subcontractors so that appropriate erosion and sediment control/stormwater preventive measures are conformed to at each stage of the work.
(b) Prepare the required National Pollutant Discharge Elimination System (NPDES) Inspection Record and submit to the Engineer.
(c) Attend all weekly or monthly construction meetings to discuss the findings of the NPDES inspection and other related issues.
(d) Implement the erosion and sediment control/stormwater site plans requested.
(e) Provide any needed erosion and sediment control/stormwater practices for the Contractor's temporary work not shown on the plans, such as, but not limited to work platforms, temporary construction, pumping operations, plant and storage yards, and cofferdams.
(f) Acquire applicable permits and comply with requirements for borrow pits, dewatering, and any temporary work conducted by the Contractor in jurisdictional areas.
(g) Conduct all erosion and sediment control/stormwater work in a timely and workmanlike manner.

(h) Fully perform and install erosion and sediment control/stormwater work prior to any suspension of the work.

(i) Coordinate with Department, Federal, State and Local Regulatory agencies on resolution of erosion and sediment control/stormwater issues due to the Contractor's operations.

(j) Ensure that proper cleanup occurs from vehicle tracking on paved surfaces or any location where sediment leaves the Right-of-Way.

(k) Have available a set of erosion and sediment control/stormwater plans that are initialed and include the installation date of Best Management Practices. These practices shall include temporary and permanent groundcover and be properly updated to reflect necessary plan and field changes for use and review by Department personnel as well as regulatory agencies.

(2) Requirements set forth under the NPDES Permit - The Department's NPDES Stormwater permit (NCS000250) outlines certain objectives and management measures pertaining to construction activities. The permit references *NCG010000, General Permit to Discharge Stormwater* under the NPDES, and states that the Department shall incorporate the applicable requirements into its delegated Erosion and Sediment Control Program for construction activities disturbing one or more acres of land. The Department further incorporates these requirements on all contracted bridge and culvert work at jurisdictional waters, regardless of size. Some of the requirements are, but are not limited to:

(a) Control project site waste to prevent contamination of surface or ground waters of the state, i.e. from equipment operation/maintenance, construction materials, concrete washout, chemicals, litter, fuels, lubricants, coolants, hydraulic fluids, any other petroleum products, and sanitary waste.

(b) Inspect erosion and sediment control/stormwater devices and stormwater discharge outfalls at least once every 7 calendar days and within 24 hours after a rainfall event of 0.5 inch that occurs within a 24 hour period. Additional monitoring may be required at the discretion of Division of Water Resources personnel if the receiving stream is 303(d) listed for turbidity and the project has had documented problems managing turbidity.

(c) Maintain an onsite rain gauge or use the Department's Multi-Sensor Precipitation Estimate website to maintain a daily record of rainfall amounts and dates.

(d) Maintain erosion and sediment control/stormwater inspection records for review by Department and Regulatory personnel upon request.

(e) Implement approved reclamation plans on all borrow pits, waste sites and staging areas.

(f) Maintain a log of turbidity test results as outlined in the Department's Procedure for Monitoring Borrow Pit Discharge.

(g) Provide secondary containment for bulk storage of liquid materials.

(h) Provide training for employees concerning general erosion and sediment control/stormwater awareness, the Department's NPDES Stormwater Permit NCS000250 requirements, and the applicable requirements of the *General Permit, NCG010000*.

(i) Report violations of the NPDES permit to the Engineer immediately who will notify the Division of Water Quality Regional Office within 24 hours of becoming aware of the violation.

(3) Quality Control Program - Maintain a quality control program to control erosion, prevent sedimentation and follow provisions/conditions of permits. The quality control program shall:

(a) Follow permit requirements related to the Contractor and subcontractors' construction activities.
(b) Ensure that all operators and subcontractors on site have the proper erosion and sediment control/stormwater certification.
(c) Notify the Engineer when the required certified erosion and sediment control/stormwater personnel are not available on the job site when needed.
(d) Conduct the inspections required by the NPDES permit.
(e) Take corrective actions in the proper timeframe as required by the NPDES permit for problem areas identified during the NPDES inspections.
(f) Incorporate erosion control into the work in a timely manner and stabilize disturbed areas with mulch/seed or vegetative cover on a section-by-section basis.
(g) Use flocculants approved by state regulatory authorities where appropriate and where required for turbidity and sedimentation reduction.
(h) Ensure proper installation and maintenance of temporary erosion and sediment control devices.
(i) Remove temporary erosion or sediment control devices when they are no longer necessary as agreed upon by the Engineer.
(j) The Contractor's quality control and inspection procedures shall be subject to review by the Engineer. Maintain NPDES inspection records and make records available at all times for verification by the Engineer.

(B) *Certified Foreman* - At least one Certified Foreman shall be onsite for each type of work listed herein during the respective construction activities to control erosion, prevent sedimentation and follow permit provisions:

(1) Foreman in charge of grading activities
(2) Foreman in charge of bridge or culvert construction over jurisdictional areas
(3) Foreman in charge of utility activities

The Contractor may request to use the same person as the Level II Supervisor and Level II Foreman. This person shall be onsite whenever construction activities as described above are taking place. This request shall be approved by the Engineer prior to work beginning.

The Contractor may request to name a single Level II Foreman to oversee multiple construction activities on small bridge or culvert replacement projects. This request shall be approved by the Engineer prior to work beginning.

(C) *Certified Installers* - Provide at least one onsite, Level I Certified Installer for each of the following erosion and sediment control/stormwater crew:

(1) Seeding and Mulching
(2) Temporary Seeding
(3) Temporary Mulching
(4) Sodding
(5) Silt fence or other perimeter erosion/sediment control device installations
(6) Erosion control blanket installation
(7) Hydraulic tackifier installation
(8) Turbidity curtain installation
(9) Rock ditch check/sediment dam installation
(10) Ditch liner/matting installation
(11) Inlet protection
(12) Riprap placement
(13) Stormwater BMP installations (such as but not limited to level spreaders, retention/detention devices)
(14) Pipe installations within jurisdictional areas

If a Level I *Certified Installer* is not onsite, the Contractor may substitute a Level II Foreman for a Level I Installer, provided the Level II Foreman is not tasked to another crew requiring Level II Foreman oversight.

(D) *Certified Designer* - Include the certification number of the Level III-B Certified Designer on the erosion and sediment control/stormwater component of all reclamation plans and if applicable, the certification number of the Level III-A Certified Designer on the design of the project erosion and sediment control/stormwater plan.

Preconstruction Meeting

Furnish the names of the *Certified Erosion and Sediment Control/Stormwater Supervisor, Certified Foremen, Certified Installers* and *Certified Designer* and notify the Engineer of changes in certified personnel over the life of the contract within 2 days of change.

Ethical Responsibility

Any company performing work for the North Carolina Department of Transportation has the ethical responsibility to fully disclose any reprimand or dismissal of an employee resulting from improper testing or falsification of records.

Revocation or Suspension of Certification

Upon recommendation of the Chief Engineer to the certification entity, certification for *Supervisor*, *Certified Foremen*, *Certified Installers* and *Certified Designer* may be revoked or suspended with the issuance of an *Immediate Corrective Action (ICA), Notice of Violation (NOV),* or C*ease and Desist Order* for erosion and sediment control/stormwater related issues.

The Chief Engineer may recommend suspension or permanent revocation of certification due to the following:

(A) Failure to adequately perform the duties as defined within this certification provision.
(B) Issuance of an ICA, NOV, or Cease and Desist Order.
(C) Failure to fully perform environmental commitments as detailed within the permit conditions and specifications.
(D) Demonstration of erroneous documentation or reporting techniques.
(E) Cheating or copying another candidate's work on an examination.
(F) Intentional falsification of records.
(G) Directing a subordinate under direct or indirect supervision to perform any of the above actions.
(H) Dismissal from a company for any of the above reasons.
(I) Suspension or revocation of one's certification by another entity.

Suspension or revocation of a certification will be sent by certified mail to the certificant and the Corporate Head of the company that employs the certificant.

A certificant has the right to appeal any adverse action which results in suspension or permanent revocation of certification by responding, in writing, to the Chief Engineer within 10 calendar days after receiving notice of the proposed adverse action.

Chief Engineer
1536 Mail Service Center
Raleigh, NC 27699-1536

Failure to appeal within 10 calendar days will result in the proposed adverse action becoming effective on the date specified on the certified notice. Failure to appeal within the time specified will result in a waiver of all future appeal rights regarding the adverse action taken. The certificant will not be allowed to perform duties associated with the certification during the appeal process.

The Chief Engineer will hear the appeal and make a decision within 7 days of hearing the appeal. Decision of the Chief Engineer will be final and will be made in writing to the certificant.

If a certification is temporarily suspended, the certificant shall pass any applicable written examination and any proficiency examination, at the conclusion of the specified suspension period, prior to having the certification reinstated.

Measurement and Payment

Certified Erosion and Sediment Control/Stormwater Supervisor, Certified Foremen, Certified Installers and *Certified Designer* will be incidental to the project for which no direct compensation will be made.

PROCEDURE FOR MONITORING BORROW PIT DISCHARGE:

(2-20-07) (Rev. 3-19-13) 105-16, 230, 801 SP1 G181

Water discharge from borrow pit sites shall not cause surface waters to exceed 50 NTUs (nephelometric turbidity unit) in streams not designated as trout waters and 10 NTUs in streams, lakes or reservoirs designated as trout waters. For lakes and reservoirs not designated as trout waters, the turbidity shall not exceed 25 NTUs. If the turbidity exceeds these levels due to natural background conditions, the existing turbidity level shall not be increased.

If during any operating day, the downstream water quality exceeds the standard, the Contractor shall do all of the following:

(A) Either cease discharge or modify the discharge volume or turbidity levels to bring the downstream turbidity levels into compliance, or

(B) Evaluate the upstream conditions to determine if the exceedance of the standard is due to natural background conditions. If the background turbidity measurements exceed the standard, operation of the pit and discharge can continue as long as the stream turbidity levels are not increased due to the discharge.

(C) Measure and record the turbidity test results (time, date and sampler) at all defined sampling locations 30 minutes after startup and at a minimum, one additional sampling of all sampling locations during that 24-hour period in which the borrow pit is discharging.

(D) Notify DWQ within 24 hours of any stream turbidity standard exceedances that are not brought into compliance.

During the Environmental Assessment required by Article 230-4 of the *2012 Standard Specifications*, the Contractor shall define the point at which the discharge enters into the State's surface waters and the appropriate sampling locations. Sampling locations shall include points upstream and downstream from the point at which the discharge enters these waters. Upstream sampling location shall be located so that it is not influenced by backwater conditions and represents natural background conditions. Downstream sampling location shall be located at the point where complete mixing of the discharge and receiving water has occurred.

The discharge shall be closely monitored when water from the dewatering activities is introduced into jurisdictional wetlands. Any time visible sedimentation (deposition of sediment) on the wetland surface is observed, the dewatering activity will be suspended until turbidity levels in the stilling basin can be reduced to a level where sediment deposition does not occur. Staining of wetland surfaces from suspended clay particles, occurring after evaporation or infiltration, does not constitute sedimentation. No activities shall occur in wetlands that adversely affect the functioning of a wetland. Visible sedimentation will be considered an indication of possible adverse impacts on wetland use.

The Engineer will perform independent turbidity tests on a random basis. These results will be maintained in a log within the project records. Records will include, at a minimum, turbidity test results, time, date and name of sampler. Should the Department's test results exceed those of the Contractor's test results, an immediate test shall be performed jointly with the results superseding the previous test results of both the Department and the Contractor.

The Contractor shall use the *NCDOT Turbidity Reduction Options for Borrow Pits Matrix,* available at http://www.ncdot.gov/doh/operations/dp_chief_eng/roadside/fieldops/downloads/Files/TurbidityReductionOptionSheet.pdf to plan, design, construct, and maintain BMPs to address water quality standards. Tier I Methods include stilling basins which are standard compensatory BMPs. Other Tier I methods are noncompensatory and shall be used when needed to meet the stream turbidity standards. Tier II Methods are also noncompensatory and are options

that may be needed for protection of rare or unique resources or where special environmental conditions exist at the site which have led to additional requirements being placed in the DWQ's 401 Certifications and approval letters, Isolated Wetland Permits, Riparian Buffer Authorization or a DOT Reclamation Plan's Environmental Assessment for the specific site. Should the Contractor exhaust all Tier I Methods on a site exclusive of rare or unique resources or special environmental conditions, Tier II Methods may be required by regulators on a case by case basis per supplemental agreement.

The Contractor may use cation exchange capacity (CEC) values from proposed site borings to plan and develop the bid for the project. CEC values exceeding 15 milliequivalents per 100 grams of soil may indicate a high potential for turbidity and should be avoided when dewatering into surface water is proposed.

No additional compensation for monitoring borrow pit discharge will be paid.

EMPLOYMENT:

(11-15-11) (Rev. 1-17-12) 108, 102 SP1 G184

Revise the *2012 Standard Specifications* as follows:

Page 1-20, Subarticle 102-15(O), delete and replace with the following:

(O) Failure to restrict a former Department employee as prohibited by Article 108-5.

Page 1-65, Article 108-5 Character of Workmen, Methods, and Equipment, line 32, delete all of line 32, the first sentence of the second paragraph and the first word of the second sentence of the second paragraph.

STATE HIGHWAY ADMINISTRATOR TITLE CHANGE:

(9-18-12) SP1 G185

Revise the *2012 Standard Specifications* as follows:

Replace all references to "State Highway Administrator" with "Chief Engineer".

SUBLETTING OF CONTRACT:

(11-18-2014) 108-6 SP1 G186

Revise the *2012 Standard Specifications* as follows:

Page 1-66, Article 108-6 Subletting of Contract, line 37, add the following as the second sentence of the first paragraph:

All requests to sublet work shall be submitted within 30 days of the date of availability or prior to expiration of 20% of the contract time, whichever date is later, unless otherwise approved by the Engineer.

Page 1-67, Article 108-6 Subletting of Contract, line 7, add the following as the second sentence of the fourth paragraph:

Purchasing materials for subcontractors is not included in the percentage of work required to be performed by the Contractor. If the Contractor sublets items of work but elects to purchase material for the subcontractor, the value of the material purchased will be included in the total dollar amount considered to have been sublet.

MOBILIZATION:

(09-15-15) 800 SP1 G194

Revise the *2012 Standard Specifications* as follows:

Page 8-1, Subarticle 800-2 Measurement and Payment, add the following as the 5th paragraph:

For projects that have a delayed availability date of 90 calendar days or more after contract execution, the first mobilization payment may be for the verified actual cost of paid bond premiums. This payment will only be made upon request by the contractor with supporting documentation including invoice and proof of payment. This payment will be limited to 1% of the amount bid for the contract and the subsequent mobilization payment will be reduced by an equal amount to follow the payment schedule as shown above. In no case will more than 5% of the amount bid for the contract be paid before the last partial pay estimate.

DELAY IN RIGHT OF ENTRY:

(7-1-95) (Rev. 7-15-14) 108 SP1 G22

The Contractor will not be allowed right of entry to the following parcel(s) prior to the listed date(s) unless otherwise permitted by the Engineer.

Parcel No.	Property Owner	Date
U-5806 002	Concord Mills	1-1-18
U-5806 005	Chick-fil-A	1-1-18

PROJECT SPECIAL PROVISIONS

ROADWAY

CLEARING AND GRUBBING - METHOD II:

(9-17-02) (Rev.8-18-15) 200 SP2 R02A

Perform clearing on this project to the limits established by Method "II" shown on Standard Drawing No. 200.02 of the *2012 Roadway Standard Drawings*. Conventional clearing methods may be used except where permit drawings or conditions have been included in the proposal which require certain areas to be cleared by hand methods.

BURNING RESTRICTIONS:

(7-1-95) 200, 210, 215 SP2 R05

Open burning is not permitted on any portion of the right-of-way limits established for this project. Do not burn the clearing, grubbing or demolition debris designated for disposal and generated from the project at locations within the project limits, off the project limits or at any waste or borrow sites in this county. Dispose of the clearing, grubbing and demolition debris by means other than burning, according to state or local rules and regulations.

SHOULDER AND FILL SLOPE MATERIAL:

(5-21-02) 235, 560 SP2 R45 A

Description

Perform the required shoulder and slope construction for this project in accordance with the applicable requirements of Section 560 and Section 235 of the *2012 Standard Specifications*.

Measurement and Payment

Where the material has been obtained from an authorized stockpile or from a borrow source and *Borrow Excavation* is not included in the contract, no direct payment will be made for this work, as the cost of this work will be part of the work being paid at the contract lump sum price for *Grading.* If *Borrow Excavation* is included in this contract and the material has been obtained from an authorized stockpile or from a borrow source, measurement and payment will be as provided in Section 230 of the *2012 Standard Specifications* for *Borrow Excavation*.

BLASTING:

(2-16-16) 220 SP2 R88B

Revise the *2012 Standard Specifications* as follows:

Page 2-8, Article 220-1 DESCRIPTION, line 22, delete "cushion, ".

Page 2-8, Article 220-1 DESCRIPTION, line 23, add the following after the third sentence:

Unless required otherwise in the contract, design blasts for the vibration and air overpressure limits in this section.

Page 2-9, Subarticle 220-3(A) Vibration and Air Overpressure Limits, line 18, add the following to the end of Subarticle 220-3(A):

Unless required otherwise in the contract or directed, design production and trench blasts in accordance with the following:

(1) Production Blasting

(a) For rock cut slopes steeper than 1.5:1 (H:V) without pre-splitting, do not use production blast holes more than 4" in diameter within 10 ft of finished slope faces or neat lines
(b) Do not drill production holes below bottom of adjacent pre-split blast holes
(c) Use delay blasting to detonate production blast holes towards a free face

(2) Trench Blasting

(a) Do not use trench blast holes more than 3" in diameter
(b) Do not use ANFO or other bulk loaded products
(c) Use cartridge explosives or other explosive types designed for trench blasting
(d) Use charges with a diameter of 1/2" to 3/4" less than the trench blast hole diameter

PIPE INSTALLATION:

(11-20-12) (Rev. 8-18-15) 300 SP3 R01

Revise the *2012 Standard Specifications* as follows:

Page 3-1, Article 300-2, Materials, line 15, in the materials table, replace "Flowable Fill" and "Geotextiles" with the following:

Item	**Section**
Flowable Fill, Excavatable	1000-6
Grout, Type 2	1003
Geotextiles, Type 4	1056

Page 3-1, Article 300-2, Materials, lines 23-24, replace sentence with the following:

Provide foundation conditioning geotextile and geotextile to wrap pipe joints in accordance with Section 1056 for Type 4 geotextile.

Page 3-3, Subarticle 300-6(A), Rigid Pipe, line 2, in the first paragraph, replace "an approved non-shrink grout." with "grout." and line 4, in the second paragraph, replace "filtration geotextile" with "geotextile".

Page 3-3, Article 300-7, Backfilling, lines 37-38, in the first and second sentences of the fifth paragraph, replace "Excavatable flowable fill" with "Flowable fill".

ASPHALT PAVEMENTS - SUPERPAVE:

(6-19-12) (Rev. 8-16-16) 605, 609, 610, 650 SP6 R01

Revise the *2012 Standard Specifications* as follows:

Page 6-3, Article 605-7, APPLICATION RATES AND TEMPERATURES, replace this article, including Table 605-1, with the following:

Apply tack coat uniformly across the existing surface at target application rates shown in Table 605-1.

TABLE 605-1
APPLICATION RATES FOR TACK COAT

Existing Surface	Target Rate (gal/sy)
	Emulsified Asphalt
New Asphalt	0.04 ± 0.01
Oxidized or Milled Asphalt	0.06 ± 0.01
Concrete	0.08 ± 0.01

Apply tack coat at a temperature within the ranges shown in Table 605-2. Tack coat shall not be overheated during storage, transport or at application.

TABLE 605-2
APPLICATION TEMPERATURE FOR TACK COAT

Asphalt Material	Temperature Range
Asphalt Binder, Grade PG 64-22	350 - 400°F
Emulsified Asphalt, Grade RS-1H	130 - 160°F
Emulsified Asphalt, Grade CRS-1	130 - 160°F
Emulsified Asphalt, Grade CRS-1H	130 - 160°F
Emulsified Asphalt, Grade HFMS-1	130 - 160°F
Emulsified Asphalt, Grade CRS-2	130 - 160°F

Page 6-6, Subarticle 607-5(A), Milled Asphalt Pavement, line 25, add the following to the end of the paragraph:

Areas to be paid under these items include mainline, turn lanes, shoulders, and other areas milled in conjunction with the mainline and any additional equipment necessary to remove pavement in the area of manholes, water valves, curb, gutter and other obstructions.

Page 6-6, Subarticle 607-5(C), Incidental Milling, lines 42-48, replace the paragraph with the following:

Incidental Milling to be paid will be the actual number of square yards of surface milled where the Contractor is required to mill butt joints, irregular areas and intersections milled as a separate operation from mainline milling and re-mill areas that are not due to the Contractor's negligence whose length is less than 100 feet. Measurement will be made as provided in Subarticle 607-5(A) for each cut the Contractor is directed to perform. Where the Contractor elects to make multiple cuts to achieve the final depth, no additional measurement will be made. Compensation will be made at the contract unit price per square yard for *Incidental Milling*.

Page 6-7, Article 609-3, FIELD VERIFICATION OF MIXTURE AND JOB MIX FORMULA ADJUSTMENTS, lines 35-37, delete the second sentence of the second paragraph.

Page 6-18, Article 610-1 DESCRIPTION, lines 40-41, delete the last sentence of the last paragraph.

Page 6-19, Subarticle 610-3(A), Mix Design-General, line 5, add the following as the first paragraph:

Warm mix asphalt (WMA) is allowed for use at the Contractor's option in accordance with the NCDOT Approved Products List for WMA Technologies available at:

https://connect.ncdot.gov/resources/Materials/MaterialsResources/Warm%20Mix%20Asphalt%20Approved%20List.pdf

Page 6-20, Subarticle 610-3(C), Job Mix Formula (JMF), lines 47-48, replace the last sentence of the third paragraph with the following:

The JMF mix temperature shall be within the ranges shown in Table 610-1 unless otherwise approved.

Page 6-21, Subarticle 610-3(C) Job Mix Formula (JMF), replace Table 610-1 with the following:

TABLE 610-1
MIXING TEMPERATURE AT THE ASPHALT PLANT

Binder Grade	JMF Mix Temperature
PG 58-28; PG 64-22	250 - 290ºF
PG 70-22	275- 305ºF
PG 76-22	300- 325ºF

Page 6-21, Subarticle 610-3(C) Job Mix Formula (JMF), lines 1-2, in the first sentence of the first paragraph, delete "and compaction". Lines 4-7, delete the second paragraph and replace with the following:

When RAS is used, the JMF mix temperature shall be established at 275ºF or higher.

Page 6-22, Article 610-4, WEATHER, TEMPERATURE AND SEASONAL LIMITATIONS FOR PRODUCING AND PLACING ASPHALT MIXTURES, lines 15-17, replace the second sentence of the first paragraph with the following:

Do not place asphalt material when the air or surface temperatures, measured at the location of the paving operation away from artificial heat, do not meet Table 610-5.

Page 6-23, Article 610-4, WEATHER, TEMPERATURE AND SEASONAL LIMITATIONS FOR PRODUCING AND PLACING ASPHALT MIXTURES, replace Table 610-5 with the following:

TABLE 610-5
PLACEMENT TEMPERATURES FOR ASPHALT

Asphalt Concrete Mix Type	Minimum Surface and Air Temperature
B25.0B, C	35°F
I19.0B, C, D	35°F
SF9.5A, S9.5B	40°F[A]
S9.5C, S12.5C	45°F[A]
S9.5D, S12.5D	50°F

A. For the final layer of surface mixes containing recycled asphalt shingles (RAS), the minimum surface and air temperature shall be 50ºF.

Page 6-23, Subarticle 610-5(A), General, lines 33-34, replace the last sentence of the third paragraph with the following:

Produce the mixture at the asphalt plant within ±25 ºF of the JMF mix temperature. The temperature of the mixture, when discharged from the mixer, shall not exceed 350ºF.

Page 6-26, Article 610-7, HAULING OF ASPHALT MIXTURE, lines 22-23, in the fourth sentence of the first paragraph replace "so as to overlap the top of the truck bed and" with "to". Line 28, in the last paragraph, replace "+15 ºF to -25 ºF of the specified JMF temperature." with "±25 ºF of the specified JMF mix temperature."

Page 6-26, Article 610-8, SPREADING AND FINISHING, **line 34**, add the following new paragraph:

As referenced in Section 9.6.3 of the *HMA/QMS Manual*, use the automatic screed controls on the paver to control the longitudinal profile. Where approved by the Engineer, the Contractor has the option to use either a fixed or mobile string line.

Page 6-29, Article 610-13, FINAL SURFACE TESTING AND ACCEPTANCE, line 39, add the following after the first sentence in the first paragraph:

Smoothness acceptance testing using the inertial profiler is not required on ramps, loops and turn lanes.

Page 6-30, Subarticle 610-13(A), Option 1 – Inertial Profiler, lines 15-16, replace the fourth sentence of the fourth paragraph with the following:

The interval at which relative profile elevations are reported shall be 2".

Page 6-30, Subarticle 610-13(A), Option 1 – Inertial Profiler, lines 25-28, replace the ninth paragraph with the following:

Operate the profiler at any speed as per the manufacturer's recommendations to collect valid data.

Page 6-30, Subarticle 610-13(A), Option 1 – Inertial Profiler, lines 30-31, delete the third sentence of the tenth paragraph.

Page 6-31, Subarticle 610-13(A), Option 1 – Inertial Profiler, lines 11-13, replace the first sentence of the third paragraph with the following:

After testing, transfer the profile data from the profiler portable computer's hard drive to a write once storage media (Flash drive, USB, DVD-R or CD-R) or electronic media approved by the Engineer.

Page 6-31, Subarticle 610-13(A), Option 1 – Inertial Profiler, lines 17-18, replace the first sentence of the fourth paragraph with the following:

Submit a report with the documentation and electronic data of the evaluation for each section to the Engineer within 10 days after completion of the smoothness testing. The report shall be in the tabular format for each 0.10 segment or a portion thereof with a summary of the MRI values and the localized roughness areas including corresponding project station numbers or acceptable reference points. Calculate the pay adjustments for all segments in accordance with the formulas in Sections (1) and (2) shown below. The Engineer shall review and approval all pay adjustments unless corrective action is required.

Page 6-31, Subarticle 610-13(A)(1), Acceptance for New Construction, lines 36-37, replace the third paragraph with the following:

The price adjustment will apply to each 0.10-mile section or prorated for a portion thereof, based on the Mean Roughness Index (MRI), the average IRI values from both wheel paths.

Page 6-32, Subarticle 610-13(A)(2), Localized Roughness, lines 12-16, replace the first paragraph with the following:

Areas of localized roughness shall be identified through the "Smoothness Assurance Module (SAM)" provided in the ProVAL software. Use the SAM report to optimize repair strategies by analyzing the measurements from profiles collected using inertial profilers. The ride quality threshold for localized roughness shall be 165 in/mile for any sections that are 15 ft. to 100 ft. in length at the continuous short interval of 25 ft. Submit a continuous roughness report to identify each section with project station numbers or reference points outside the threshold and identify all localized roughness, with the signature of the Operator included with the submitted IRI trace and electronic files.

Page 6-32, Subarticle 610-13(A)(2), Localized Roughness, line 21, add the following new paragraph:
If the Engineer does not require corrective action, the pay adjustment for each area of localized roughness shall be based on the following formula:

$$PA = (165 - LR\#)\ 5$$

Where:

PA = Pay Adjustment (dollars)
LR# = The Localized Roughness number determined from SAM report for the ride quality threshold

Page 6-41, Subarticle 650-3(B), Mix Design Criteria, replace Table 650-1 with the following:

TABLE 650-1
OGAFC GRADATION CRITERIA

Sieve Size (mm)	*Type FC-1*	*Type FC-1 Modified*	*Type FC-2 Modified*
19.0	-	-	100
12.5	100	100	80 - 100
9.50	75 - 100	75 - 100	55 - 80
4.75	25 - 45	25 - 45	15 - 30
2.36	5 - 15	5 - 15	5 - 15
0.075	1.0 - 3.0	1.0 - 3.0	2.0 - 4.0

ASPHALT BINDER CONTENT OF ASPHALT PLANT MIXES:
(11-21-00) (Rev. 7-17-12) 609 SP6 R15

The approximate asphalt binder content of the asphalt concrete plant mixtures used on this project will be as follows:

Asphalt Concrete Base Course	Type B 25.0__	4.4%
Asphalt Concrete Intermediate Course	Type I 19.0__	4.8%
Asphalt Concrete Surface Course	Type S 4.75A	6.8%
Asphalt Concrete Surface Course	Type SA-1	6.8%
Asphalt Concrete Surface Course	Type SF 9.5A	6.7%
Asphalt Concrete Surface Course	Type S 9.5__	6.0%
Asphalt Concrete Surface Course	Type S 12.5__	5.6%

The actual asphalt binder content will be established during construction by the Engineer within the limits established in the *2012 Standard Specifications.*

ASPHALT PLANT MIXTURES:
(7-1-95) 609 SP6 R20

Place asphalt concrete base course material in trench sections with asphalt pavement spreaders made for the purpose or with other equipment approved by the Engineer.

PRICE ADJUSTMENT - ASPHALT BINDER FOR PLANT MIX:
(11-21-00) 620 SP6 R25

Price adjustments for asphalt binder for plant mix will be made in accordance with Section 620 of the *2012 Standard Specifications.*

The base price index for asphalt binder for plant mix is **$ 366.00** per ton.

This base price index represents an average of F.O.B. selling prices of asphalt binder at supplier's terminals on **November 1, 2017**.

FINAL SURFACE TESTING NOT REQUIRED:
(5-18-04) (Rev. 2-16-16) 610 SP6 R45

Final surface testing is not required on this project in accordance with Section 610-13, *Final Surface Testing and Acceptance*.

CONVERT EXISTING CATCH BASIN TO TBJB WITH MANHOLE:
(1-1-02) (Rev. 7-18-06) 840, 859 SP8 R50

At the proper phase of construction, convert the existing catch basins at locations indicated in the plans or where directed, to traffic bearing junction boxes with manhole in accordance with the details in the plans and the applicable requirements of Sections 840 and 859 of the *2012 Standard Specifications*.

Convert Existing Catch Basin to Traffic Bearing Junction Box With Manhole will be measured and paid as each, completed and accepted. Such price and payment is considered full compensation for all equipment, materials, labor, tools, and incidentals necessary to complete each conversion satisfactorily.

Payment will be made under:

Pay Item	**Pay Unit**
Convert Existing Catch Basin to Traffic Bearing Junction Box With Manhole	Each

GUARDRAIL END UNITS, TYPE - TL-3:
(4-20-04) (Rev. 7-1-17) 862 SP8 R65

Description

Furnish and install guardrail end units in accordance with the details in the plans, the applicable requirements of Section 862 of the *2012 Standard Specifications*, and at locations shown in the plans.

Materials

Furnish guardrail end units listed on the NCDOT Approved Products List at https://apps.dot.state.nc.us/vendor/approvedproducts/ or approved equal.

Prior to installation the Contractor shall submit to the Engineer:

(A) FHWA acceptance letter for each guardrail end unit certifying it meets the requirements of the AASHTO Manual for Assessing Safety Hardware, Test Level 3, in accordance with Article 106-2 of the *2012 Standard Specifications*.

(B) Certified working drawings and assembling instructions from the manufacturer for each guardrail end unit in accordance with Article 105-2 of the *2012 Standard Specifications*.

No modifications shall be made to the guardrail end unit without the express written permission from the manufacturer. Perform installation in accordance with the details in the plans, and details and assembling instructions furnished by the manufacturer.

Construction Methods

Guardrail end delineation is required on all approach and trailing end sections for both temporary and permanent installations. Guardrail end delineation consists of yellow reflective sheeting applied to the entire end section of the guardrail in accordance with Article 1088-3 of the *2012 Standard Specifications* and is incidental to the cost of the guardrail end unit.

Measurement and Payment

Measurement and payment will be made in accordance with Article 862-6 of the *2012 Standard Specifications*.

Payment will be made under:

Pay Item	**Pay Unit**
Guardrail End Units, Type TL-3	Each

IMPACT ATTENUATOR UNITS, TYPE 350:

(4-20-04) (Rev. 7-21-15) SP08 R075

Description

Furnish and install impact attenuator units and any components necessary to connect the impact attenuator units in accordance with the manufacturer's requirement, the details in the plans and at locations shown in the plans.

Materials

Furnish impact attenuator units listed on the Approved Products List at https://apps.dot.state.nc.us/vendor/approvedproducts/ or approved equal. Prior to installation the Contractor shall submit to the Engineer:

(A) FHWA acceptance letter for each impact attenuator unit certifying it meets the requirements of NCHRP Report 350, Test Level 3, in accordance with Article 106-2 of the *2012 Standard Specifications*.

(B) Certified working drawings and assembling instructions from the manufacturer for each impact attenuator unit in accordance with Article 105-2 of the *2012 Standard Specifications*.

No modifications shall be made to the impact attenuator unit without the express written permission from the manufacturer. Perform installation in accordance with the details in the plans and details and assembling instructions furnished by the manufacturer.

Construction Methods

If the median width is 40 feet or less, the Contractor shall supply NON-GATING Impact Attenuator Units.

If the median width is greater than 40 feet, the Contractor may use GATING or NON-GATING Impact Attenuator Units.

Measurement and Payment

Impact Attenuator Unit, Type 350 will be measured and paid at the contract unit price per each. Such prices and payment will be full compensation for all work covered by this provision including, but not limited to, furnishing, installing and all incidentals necessary to complete the work.

Payment will be made under:

Pay Item	**Pay Unit**
Impact Attenuator Units, Type 350	Each

TEMPORARY 48" CHAIN LINK FENCE WITH POSTS:

Description

Construct temporary 48" chain link fence in accordance with the plans, the *2012 Standard Specifications*, Roadway Standard Drawing No. 866.01, and as directed by the Engineer.

Materials

Refer to Article 866-2 of the *Standard Specifications*.

Construction Methods

Construct the temporary 48" chain link fence in accordance with the applicable requirements of Section 866 of the *2012 Standard Specifications*, Roadway Standard Drawing No. 866.01, and as directed by the Engineer. After the fence has served its purpose and is no longer needed, as determined by the Engineer, it will become the property of the Contractor and shall be removed.

Measurement and Payment

Temporary 48" Chain Link Fence With Posts will be measured and paid for as the actual number of linear feet of fence constructed and accepted, measured in place from center of end post to center of end post. All posts used for the chain link fence are included in the price of the fence and will not be paid for separately. Such price and payment will be full compensation for all materials, labor, fence maintenance, removal, and incidentals, necessary to satisfactorily complete the work.

Work includes, but is not limited to, clearing and grading; and furnishing and installing fence fabric, barbed wire, tie wires, tie rods, stretcher bars, top rails, tension wire, posts and post braces, concrete, fittings and any other materials, and removal of the fence.

Payment will be made under:

Pay Item	**Pay Unit**
Temporary 48" Chain Link Fence With Posts	Linear Foot

DETECTABLE WARNINGS TO RETROFIT EXISTING CURB RAMPS:

(10-21-03) (Rev. 8-16-11) 848 SP8 R125

Description

Construct detectable warnings consisting of raised truncated domes to retrofit existing curb ramps in accordance with the plan details, Section 848 of the *2012 Standard Specifications,* the requirements of the *28 CFR Part 36 ADA Standards for Accessible Design* and these provisions.

Materials

Detectable warning for retrofitting existing curb ramps shall consist of raised truncated domes. The description, size and spacing shall conform to Section 848 of the *2012 Standard Specifications.*

Use material for detectable warning systems as shown herein. Material and coating specifications must be stated in the Manufacturers Type 3 Certification and all Detectable Warning systems must be on the NCDOT Approved Products List.

Install detectable warnings created from one of the following materials: precast concrete blocks or bricks, clay paving brick, gray or ductile iron castings, mild steel, stainless steel, and engineered plastics, rubber or composite tile. Only one material type for detectable warning will be permitted per project, unless otherwise approved by the Engineer.

(A) Detectable Warnings shall consist of a base with integrated raised truncated domes, and when constructed of precast concrete they shall conform to the material requirements of Article 848-2 of the *2012 Standard Specifications.*

(B) Detectable Warnings shall consist of a base with integrated raised truncated domes, and may be comprised of other materials including, but not limited to, clay paving brick, gray iron or ductile iron castings, mild steel, stainless steel, and engineered plastics, rubber or composite tile, which are applied directly to the curb ramps by incorporating into or attaching to the existing ramp floor. The material shall have an integral color throughout the thickness of the material. The detectable warning shall include fasteners, anchors, or adhesives for attachment in the existing ramp and shall be furnished as a system from the manufacturer.

Prior to installation, the Contractor shall submit to the Engineer assembling instructions from the manufacturer for each type of system used in accordance with Article 105-2 of the *2012 Standard Specifications*. The system shall be furnished as a kit containing all consumable materials and consumable tools, required for the application. They shall be capable of being affixed to or anchored in the concrete curb ramp, including green concrete (concrete that has set but not appreciably hardened). The system shall be solvent free and contain no volatile organic compounds (VOC). The static coefficient of friction shall be 0.8 or greater when measured on top of the truncated domes and when measured between the domes in accordance with ASTM C1028 (dry and wet). The system shall be resistant to deterioration due to exposure to sunlight, water, salt or adverse weather conditions and impervious to degradation by motor fuels, lubricants and antifreeze.

(C) When steel or gray iron or ductile iron casting products are provided, only products that meet the requirements of Subarticle 106-1(B) of the *2012 Standard Specifications* may be used. Submit to the Engineer a Type 6 Certification, catalog cuts and installation procedures at least 30 days prior to installation for all.

Construction Methods

(A) Prior to placing detectable warnings in existing concrete curb ramps, saw cut to the full depth of the concrete, for other material remove as necessary, and adjust the existing subgrade to the proper grade and in accordance with Article 848-3 of the *2012 Standard Specifications*.

(B) Install all detectable warning to retrofit existing curb ramps in accordance with the manufacturer's recommendations.

Measurement and Payment

Retrofit Existing Curb Ramps with detectable warnings constructed of any type material will be paid as the actual number of retrofitted curb ramps, completed and accepted. Such price and payment will be full compensation for excavating and backfilling; sawing, repairing and replacing portions of the existing curb ramp within the pay limits for retrofit shown on the detail; pavement repairs; furnishing and placing detectable warnings, construction joints and removing and disposing of portions of the existing curb ramp when required and for all materials, labor, equipment, tools and incidentals necessary to complete the work.

Payment will be made under:

Pay Item	**Pay Unit**
Retrofit Existing Curb Ramp	Each

DETECTABLE WARNINGS FOR PROPOSED CURB RAMPS:

(6-15-10) (Rev. 8-16-11) 848 SP8 R126

Description

Construct detectable warnings consisting of integrated raised truncated domes on proposed concrete curb ramps in accordance with the *2012 Standard Specifications,* plan details, the requirements of the *28 CFR Part 36 ADA Standards for Accessible Design* and this provision.

Materials

Detectable warning for proposed curb ramps shall consist of integrated raised truncated domes. The description, size and spacing shall conform to Section 848 of the *2012 Standard Specifications.*

Use material for detectable warning systems as shown herein. Material and coating specifications must be stated in the Manufacturers Type 3 Certification and all Detectable Warning systems must be on the NCDOT Approved Products List.

Install detectable warnings created from one of the following materials: precast concrete blocks or bricks, clay paving brick, gray or ductile iron castings, mild steel, stainless steel, and engineered plastics, rubber or composite tile. Only one material type for detectable warning will be permitted per project, unless otherwise approved by the Engineer.

(A) Detectable Warnings shall consist of a base with integrated raised truncated domes, and when constructed of precast concrete they shall conform to the material requirements of Article 848-2 of the *2012 Standard Specifications.*

(B) Detectable Warnings shall consist of a base with integrated raised truncated domes, and may be comprised of other materials including, but not limited, to clay paving brick, gray iron or ductile iron castings, mild steel, stainless steel, and engineered plastics, rubber or composite tile, which are cast into the concrete of the curb ramps. The material shall have an integral color throughout the thickness of the material. The detectable warning shall include fasteners or anchors for attachment in the concrete and shall be furnished as a system from the manufacturer.

Prior to installation, the Contractor shall submit to the Engineer assembling instructions from the manufacturer for each type of system used in accordance with Article 105-2 of the *2012 Standard Specifications*. The system shall be furnished as a kit containing all consumable materials and consumable tools, required for the application. They shall be capable of being affixed to or anchored in the concrete curb ramp, including green concrete (concrete that has set but not appreciably hardened). The system shall be solvent free and contain no volatile organic compounds (VOC). The static coefficient of friction shall be 0.8 or greater when measured on top of the truncated domes and when measured between the domes in accordance with ASTM C1028 (dry and wet). The system shall be resistant to deterioration due to exposure to sunlight, water, salt or adverse weather conditions and impervious to degradation by motor fuels, lubricants and antifreeze.

(C) When steel or gray iron or ductile iron casting products are provided, only products that meet the requirements of Subarticle 106-1(B) of the *2012 Standard Specifications* may be used. Submit to the Engineer a Type 6 Certification, catalog cuts and installation procedures at least 30 days prior to installation for all.

Construction Methods

(A) Prior to placing detectable warnings in proposed concrete curb ramps, adjust the existing subgrade to the proper grade and in accordance with Article 848-3 of the *2012 Standard Specifications*.

(B) Install all detectable warning in proposed concrete curb ramps in accordance with the manufacturer's recommendations.

Measurement and Payment

Detectable Warnings installed for construction of proposed curb ramps will not be paid for separately. Such payment will be included in the price bid for *Concrete Curb Ramp*.

FOUNDATIONS AND ANCHOR ROD ASSEMBLIES FOR METAL POLES:

(1-17-12) (Rev. 5-19-15) 9, 14, 17 SP9 R05

Description

Foundations for metal poles include foundations for signals, cameras, overhead and dynamic message signs (DMS) and high mount and low level light standards supported by metal poles or upright trusses. Foundations consist of footings with pedestals and drilled piers with or without grade beams or wings. Anchor rod assemblies consist of anchor rods (also called anchor bolts) with nuts and washers on the exposed ends of rods and nuts and a plate or washers on the other ends of rods embedded in the foundation.

Construct concrete foundations with the required resistances and dimensions and install anchor rod assemblies in accordance with the contract and accepted submittals. Construct drilled piers consisting of cast-in-place reinforced concrete cylindrical sections in excavated holes. Provide temporary casings or polymer slurry as needed to stabilize drilled pier excavations. Use a prequalified Drilled Pier Contractor to construct drilled piers for metal poles. Define "excavation" and "hole" as a drilled pier excavation and "pier" as a drilled pier.

This provision does not apply to materials and anchor rod assemblies for standard foundations for low level light standards. See Section 1405 of the *2012 Standard Specifications* and Standard Drawing No. 1405.01 of the *2012 Roadway Standard Drawings* for materials and anchor rod assemblies for standard foundations. For construction of standard foundations for low level light standards, standard foundations are considered footings in this provision.

This provision does not apply to foundations for signal pedestals; see Section 1743 of the *2012 Standard Specifications* and Standard Drawing No. 1743.01 of the *2012 Roadway Standard Drawings*.

Materials

Refer to the *2012 Standard Specifications*.

Item	Section
Conduit	1091-3
Grout, Type 2	1003
Polymer Slurry	411-2(B)
Portland Cement Concrete	1000
Reinforcing Steel	1070
Rollers and Chairs	411-2(C)
Temporary Casings	411-2(A)

Provide Type 3 material certifications in accordance with Article 106-3 of the *2012 Standard Specifications* for conduit, rollers, chairs and anchor rod assemblies. Store steel materials on blocking at least 12" above the ground and protect it at all times from damage; and when placing in the work make sure it is free from dirt, dust, loose mill scale, loose rust, paint, oil or other foreign materials. Load, transport, unload and store foundation and anchor rod assembly materials so materials are kept clean and free of damage. Bent, damaged or defective materials will be rejected.

Use conduit type in accordance with the contract. Use Class A concrete for footings and pedestals, Class Drilled Pier concrete for drilled piers and Class AA concrete for grade beams and wings including portions of drilled piers above bottom of wings elevations. Corrugated temporary casings may be accepted at the discretion of the Engineer. A list of approved polymer slurry products is available from:
connect.ncdot.gov/resources/Geological/Pages/Products.aspx

Provide anchor rod assemblies in accordance with the contract consisting of the following:

(A) Straight anchor rods,

(B) Heavy hex top and leveling nuts and flat washers on exposed ends of rods, and

(C) Nuts and either flat plates or washers on the other ends of anchor rods embedded in foundations.

Do not use lock washers. Use steel anchor rods, nuts and washers that meet ASTM F1554 for Grade 55 rods and Grade A nuts. Use steel plates and washers embedded in concrete with a thickness of at least 1/4". Galvanize anchor rods and exposed nuts and washers in accordance with Article 1076-4 of the *2012 Standard Specifications*. It is not necessary to galvanize nuts, plates and washers embedded in concrete.

Construction Methods

Install the required size and number of conduits in foundations in accordance with the plans and accepted submittals. Construct top of piers, footings, pedestals, grade beams and wings flat, level and within 1" of elevations shown in the plans or approved by the Engineer. Provide an Ordinary Surface finish in accordance with Subarticle 825-6(B) of the *2012 Standard Specifications* for portions of foundations exposed above finished grade. Do not remove anchor bolt templates or pedestal or grade beam forms or erect metal poles or upright trusses onto foundations until concrete attains a compressive strength of at least 3,000 psi.

(A) Drilled Piers

Before starting drilled pier construction, hold a predrill meeting to discuss the installation, monitoring and inspection of the drilled piers. Schedule this meeting after the Drilled Pier Contractor has mobilized to the site. The Resident or Division Traffic Engineer, Contractor and Drilled Pier Contractor Superintendent will attend this predrill meeting.

Do not excavate holes, install piles or allow equipment wheel loads or vibrations within 20 ft of completed piers until 16 hours after Drilled Pier concrete reaches initial set.

Check for correct drilled pier alignment and location before beginning drilling. Check plumbness of holes frequently during drilling.

Construct drilled piers with the minimum required diameters shown in the plans. Install piers with tip elevations no higher than shown in the plans or approved by the Engineer.

Excavate holes with equipment of the sizes required to construct drilled piers. Depending on the subsurface conditions encountered, drilling through rock and boulders may be required. Do not use blasting for drilled pier excavations.

Contain and dispose of drilling spoils and waste concrete as directed and in accordance with Section 802 of the *2012 Standard Specifications*. Drilling spoils consist of all materials and fluids removed from excavations.

If unstable, caving or sloughing materials are anticipated or encountered, stabilize holes with temporary casings and/or polymer slurry. Do not use telescoping temporary casings. If it becomes necessary to replace a temporary casing during drilling, backfill the excavation, insert a larger casing around the casing to be replaced or stabilize the excavation with polymer slurry before removing the temporary casing.

If temporary casings become stuck or the Contractor proposes leaving casings in place, temporary casings should be installed against undisturbed material. Unless otherwise approved, do not leave temporary casings in place for mast arm poles and cantilever signs. The Engineer will determine if casings may remain in place. If the Contractor proposes leaving temporary casings in place, do not begin drilling until a casing installation method is approved.

Use polymer slurry and additives to stabilize holes in accordance with the slurry manufacturer's recommendations. Provide mixing water and equipment suitable for polymer slurry. Maintain polymer slurry at all times so slurry meets Table 411-3 of the *2012 Standard Specifications* except for sand content.

Define a "sample set" as slurry samples collected from mid-height and within 2 ft of the bottom of holes. Take sample sets from excavations to test polymer slurry immediately after filling holes with slurry, at least every 4 hours thereafter and immediately before placing concrete. Do not place Drilled Pier concrete until both slurry samples from an excavation meet the required polymer slurry properties. If any slurry test results do not meet the requirements, the Engineer may suspend drilling until both samples from a sample set meet the required slurry properties.

Remove soft and loose material from bottom of holes using augers to the satisfaction of the Engineer. Assemble rebar cages and place cages and Drilled Pier concrete in accordance with Subarticle 411-4(E) of the *2012 Standard Specifications* except for the following:

(1) Inspections for tip resistance and bottom cleanliness are not required,
(2) Temporary casings may remain in place if approved, and
(3) Concrete placement may be paused near the top of pier elevations for anchor rod assembly installation and conduit placement or
(4) If applicable, concrete placement may be stopped at bottom of grade beam or wings elevations for grade beam or wing construction.

If wet placement of concrete is anticipated or encountered, do not place Drilled Pier concrete until a concrete placement procedure is approved. If applicable, temporary casings and fluids may be removed when concrete placement is paused or stopped in accordance with the exceptions above provided holes are stable. Remove contaminated concrete from exposed Drilled Pier concrete after removing casings and fluids. If holes are unstable, do not remove temporary casings until a procedure for placing anchor rod assemblies and conduit or constructing grade beams or wings is approved.

Use collars to extend drilled piers above finished grade. Remove collars after Drilled Pier concrete sets and round top edges of piers.

If drilled piers are questionable, pile integrity testing (PIT) and further investigation may be required in accordance with Article 411-5 of the *2012 Standard Specifications*. A drilled pier will be considered defective in accordance with Subarticle 411-5(D) of the *2012 Standard Specifications* and drilled pier acceptance is based in part on the criteria in Article 411-6 of the *2012 Standard Specifications* except for the top of pier tolerances in Subarticle 411-6(C) of the *2012 Standard Specifications*.

If a drilled pier is under further investigation, do not grout core holes, backfill around the pier or perform any work on the drilled pier until the Engineer accepts the pier. If the drilled pier is accepted, dewater and grout core holes and backfill around the pier with approved material to finished grade. If the Engineer determines a pier is unacceptable, remediation is required in accordance with Article 411-6 of the *2012 Standard Specifications*. No extension of completion date or time will be allowed for remediation of unacceptable drilled piers or post repair testing.

Permanently embed a plate in or mark top of piers with the pier diameter and depth, size and number of vertical reinforcing bars and the minimum compressive strength of the concrete mix at 28 days.

(B) Footings, Pedestals, Grade Beams and Wings

Excavate as necessary for footings, grade beams and wings in accordance with the plans, accepted submittals and Section 410 of the *2012 Standard Specifications*. If unstable, caving or sloughing materials are anticipated or encountered, shore foundation excavations as needed with an approved method. Notify the Engineer when foundation excavation is complete. Do not place concrete or reinforcing steel until excavation dimensions and foundation material are approved.

Construct cast-in-place reinforced concrete footings, pedestals, grade beams and wings with the dimensions shown in the plans and in accordance with Section 825 of the *2012 Standard Specifications*. Use forms to construct portions of pedestals and grade beams protruding above finished grade. Provide a chamfer with a 3/4" horizontal width for pedestal and grade beam edges exposed above finished grade. Backfill and fill in accordance with Article 410-8 of the *2012 Standard Specifications*. Proper compaction around footings and wings is critical for foundations to resist uplift and torsion forces. Place concrete against undisturbed soil and do not use forms for standard foundations for low level light standards.

(C) Anchor Rod Assemblies

Size anchor rods for design and the required projection above top of foundations. Determine required anchor rod projections from nut, washer and base plate thicknesses, the protrusion of 3 to 5 anchor rod threads above top nuts after tightening and the distance of one nut thickness between top of foundations and bottom of leveling nuts.

Protect anchor rod threads from damage during storage and installation of anchor rod assemblies. Before placing anchor rods in foundations, turn nuts onto and off rods past leveling nut locations. Turn nuts with the effort of one workman using an ordinary wrench without a cheater bar. Report any thread damage to the Engineer that requires extra effort to turn nuts.

Arrange anchor rods symmetrically about center of base plate locations as shown in the plans. Set anchor rod elevations based on required projections above top of foundations. Securely brace and hold rods in the correct position, orientation and alignment with a steel template. Do not weld to reinforcing steel, temporary casings or anchor rods.

Install top and leveling (bottom) nuts, washers and the base plate for each anchor rod assembly in accordance with the following procedure:

(1) Turn leveling nuts onto anchor rods to a distance of one nut thickness between the top of foundation and bottom of leveling nuts. Place washers over anchor rods on top of leveling nuts.

(2) Determine if nuts are level using a flat rigid template on top of washers. If necessary, lower leveling nuts to level the template in all directions or if applicable, lower nuts to tilt the template so the metal pole or upright truss will lean as shown in the plans. If leveling nuts and washers are not in full contact with the template, replace washers with galvanized beveled washers.

(3) Verify the distance between the foundation and leveling nuts is no more than one nut thickness.

(4) Place base plate with metal pole or upright truss over anchor rods on top of washers. High mount luminaires may be attached before erecting metal poles but do not attach cables, mast arms or trusses to metal poles or upright trusses at this time.

(5) Place washers over anchor rods on top of base plate. Lubricate top nut bearing surfaces and exposed anchor rod threads above washers with beeswax, paraffin or other approved lubricant.

(6) Turn top nuts onto anchor rods. If nuts are not in full contact with washers or washers are not in full contact with the base plate, replace washers with galvanized beveled washers.

(7) Tighten top nuts to snug-tight with the full effort of one workman using a 12" wrench. Do not tighten any nut all at once. Turn top nuts in increments. Follow a star pattern cycling through each nut at least twice.

(8) Repeat (7) for leveling nuts.

(9) Replace washers above and below the base plate with galvanized beveled washers if the slope of any base plate face exceeds 1:20 (5%), any washer is not in firm contact with the base plate or any nut is not in firm contact with a washer. If any washers are replaced, repeat (7) and (8).

(10) With top and leveling nuts snug-tight, mark each top nut on a corner at the intersection of 2 flats and a corresponding reference mark on the base plate. Mark top nuts and base plate with ink or paint that is not water-soluble. Use the turn-of-nut method for pretensioning. Do not pretension any nut all at once. Turn top nuts in increments for a total turn that meets the following nut rotation requirements:

NUT ROTATION REQUIREMENTS (Turn-of-Nut Pretensioning Method)	
Anchor Rod Diameter, inch	**Requirement**
≤ 1 1/2	1/3 turn (2 flats)
> 1 1/2	1/6 turn (1 flat)

Follow a star pattern cycling through each top nut at least twice.

(11) Ensure nuts, washers and base plate are in firm contact with each other for each anchor rod. Cables, mast arms and trusses may now be attached to metal poles and upright trusses.

(12) Between 4 and 14 days after pretensioning top nuts, use a torque wrench calibrated within the last 12 months to check nuts in the presence of the Engineer. Completely erect mast arm poles and cantilever signs and attach any hardware before checking top nuts for these structures. Check that top nuts meet the following torque requirements:

TORQUE REQUIREMENTS	
Anchor Rod Diameter, inch	**Requirement, ft-lb**
7/8	180
1	270
1 1/8	380
1 1/4	420
≥ 1 1/2	600

If necessary, retighten top nuts in the presence of the Engineer with a calibrated torque wrench to within ± 10 ft-lb of the required torque. Do not overtighten top nuts.

(13) Do not grout under base plate.

Measurement and Payment

Foundations and anchor rod assemblies for metal poles and upright trusses will be measured and paid for elsewhere in the contract.

No payment will be made for temporary casings that remain in drilled pier excavations. No payment will be made for PIT. No payment will be made for further investigation of defective piers. Further investigation of piers that are not defective will be paid as extra work in accordance with Article 104-7 of the *2012 Standard Specifications*. No payment will be made for remediation of unacceptable drilled piers or post repair testing.

MATERIALS:

(2-21-12) (Rev. 11-22-16) 1000, 1002, 1005, 1016, 1018, 1024, 1050, 1074, 1078, 1080, 1081, 1086, 1084, 1087, 1092 SP10 R01

Revise the *2012 Standard Specifications* as follows:

Page 10-1, Article 1000-1, DESCRIPTION, lines 9-10, replace the last sentence of the first paragraph with the following:

Type IL, IP, IS or IT blended cement may be used instead of Portland cement.

Page 10-1, Article 1000-1, DESCRIPTION, line 14, add the following:

If any change is made to the mix design, submit a new mix design (with the exception of an approved pozzolan source change).

If any major change is made to the mix design, also submit new test results showing the mix design conforms to the criteria. Define a major change to the mix design as:

(1) A source change in coarse aggregate, fine aggregate or cement.

(2) A pozzolan class or type change (e.g. Class F fly ash to Class C fly ash).

(3) A quantitative change in coarse aggregate (applies to an increase or decrease greater than 5%), fine aggregate (applies to an increase or decrease greater than 5%), water (applies to an increase only), cement (applies to a decrease only), or pozzolan (applies to an increase or decrease greater than 5%).

Use materials which do not produce a mottled appearance through rusting or other staining of the finished concrete surface.

Page 10-1, Article 1000-2, MATERIALS, line 16; Page 10-8, Subarticle 1000-7(A), Materials, line 8; and Page 10-18, Article 1002-2, MATERIALS, line 9, add the following to the table of item references:

Item	**Section**
Type IL Blended Cement	1024-1

Page 10-1, Subarticle 1000-3(A), Composition and Design, lines 25-27, replace the second paragraph with the following:

Fly ash may be substituted for cement in the mix design up to 30% at a rate of 1.0 lb of fly ash to each pound of cement replaced.

Page 10-2, Subarticle 1000-3(A), Composition and Design, lines 12-21, delete the third paragraph through the sixth paragraph beginning with “If any change is made to the mix design, submit…” through “…(applies to a decrease only).”

Page 10-5, Table 1000-1, REQUIREMENTS FOR CONCRETE, replace with the following:

TABLE 1000-1
REQUIREMENTS FOR CONCRETE

Class of Concrete	Min. Comp. Strength at 28 days	Maximum Water-Cement Ratio				Consistency Max. Slump		Cement Content			
		Air-Entrained Concrete		Non Air-Entrained Concrete		Vibrated	Non-Vibrated	Vibrated		Non-Vibrated	
		Rounded Aggregate	Angular Aggregate	Rounded Aggregate	Angular Aggregate			Min.	Max.	Min.	Max.
Units	*psi*					*inch*	*inch*	*lb/cy*	*lb/cy*	*lb/cy*	*lb/cy*
AA	4,500	0.381	0.426	-	-	3.5	-	639	715	-	-
AA Slip Form	4,500	0.381	0.426	-	-	1.5	-	639	715	-	-
Drilled Pier	4,500	-	-	0.450	0.450	-	5-7 dry 7-9 wet	-	-	640	800
A	3,000	0.488	0.532	0.550	0.594	3.5	4	564	-	602	-
B	2,500	0.488	0.567	0.559	0.630	1.5 machine-placed 2.5 hand-placed	4	508	-	545	-
Sand Light-weight	4,500	-	0.420	-	-	4	-	715	-	-	-
Latex Modified	3,000 7 day	0.400	0.400	-	-	6	-	658	-	-	-
Flowable Fill excavatable	150 max. at 56 days	as needed	as needed	as needed	as needed	-	Flow-able	-	-	40	100
Flowable Fill non-excavatable	125	as needed	as needed	as needed	as needed	-	Flow-able	-	-	100	as needed
Pavement	4,500 design, field 650 flexural, design only	0.559	0.559	-	-	1.5 slip form 3.0 hand place	-	526	-	-	-
Precast	See Table 1077-1	as needed	as needed	-	-	6	as needed	as needed	as needed	as needed	as needed
Prestress	per contract	See Table 1078-1	See Table 1078-1	-	-	8	-	564	as needed	-	-

Page 10-6, Subarticle 1000-4(I), Use of Fly Ash, lines 36-2, replace the first paragraph with the following:

Fly ash may be substituted for cement in the mix design up to 30% at a rate of 1.0 lb of fly ash to each pound of cement replaced. Use Table 1000-1 to determine the maximum allowable water-cementitious material (cement + fly ash) ratio for the classes of concrete listed.

Page 10-7, Table 1000-3, MAXIMUM WATER-CEMENTITIOUS MATERIAL RATIO, delete the table.

Page 10-7, Article 1000-5, HIGH EARLY STRENGTH PORTLAND CEMENT CONCRETE, lines 30-31, delete the second sentence of the third paragraph.

Page 10-19, Article 1002-3, SHOTCRETE FOR TEMPORARY SUPPORT OF EXCAVATIONS, line 30, add the following at the end of Section 1002:

(H) Handling and Storing Test Panels

Notify the Area Materials Engineer when preconstruction or production test panels are made within 24 hours of shooting the panels. Field cure and protect test panels from damage in accordance with ASTM C1140 until the Department transports panels to the Materials and Tests Regional Laboratory for coring.

Page 10-23, Table 1005-1, AGGREGATE GRADATION-COARSE AGGREGATE, replace with the following:

TABLE 1005-1
AGGREGATE GRADATION - COARSE AGGREGATE

Percentage of Total by Weight Passing

Std. Size #	2"	1 1/2"	1"	3/4"	1/2"	3/8"	#4	#8	#10	#16	#40	#200	Remarks
4	100	90-100	20-55	0-15	-	0-5	-	-	-	-	-	A	Asphalt Plant Mix
467M	100	95-100	-	35-70	-	0-30	0-5	-	-	-	-	A	Asphalt Plant Mix
5	-	100	90-100	20-55	0-10	0-5	-	-	-	-	-	A	AST, Sediment Control Stone
57	-	100	95-100	-	25-60	-	0-10	0-5	-	-	-	A	AST, Structural Concrete, Shoulder Drain Stone, Sediment Control Stone
57M	-	100	95-100	-	25-45	-	0-10	0-5	-	-	-	A	AST, Concrete Pavement
6M	-	-	100	90-100	20-55	0-20	0-8	-	-	-	-	A	AST
67	-	-	100	90-100	-	20-55	0-10	0-5	-	-	-	A	Asphalt Plant Mix, AST, Structural Concrete
78M	-	-	-	100	98-100	75-100	20-45	0-15	-	-	-	A	Asphalt Plant Mix, AST, Structural Concrete, Weep Hole Drains
14M	-	-	-	-	100	98-100	35-70	5-20	-	0-8	-	A	Asphalt Plant Mix, AST, Structural Concrete, Weep Hole Drains
9M	-	-	-	-	100	98-100	85-100	10-40	-	0-10	-	A	AST
ABC	-	100	75-97	-	55-80	-	35-55	-	25-45	-	14-30	4-12[B]	Aggregate Base Course, Aggregate Stabilization
ABC(M)	-	100	75- 100	-	45-79	-	20-40	-	0- 25	-	-	0-12[B]	Maintenance Stabilization
Light-weight[C]	-	-	-	-	100	80-100	5- 40	0-20	-	0-10	-	0-2.5	AST

A. See Subarticle 1005-4(A).
B. See Subarticle 1005-4(B).
C. For Lightweight Aggregate used in Structural Concrete, see Subarticle 1014-2(E)(6).

Page 10-39, Article 1016-3, CLASSIFICATIONS , lines 27-32, replace with the following:

Select material is clean, unweathered durable, blasted rock material obtained from an approved source. While no specific gradation is required, the below criteria will be used to evaluate the materials for visual acceptance by the Engineer:

(A) At least 50% of the rock has a diameter of from 1.5 ft to 3 ft,

(B) 30% of the rock ranges in size from 2" to 1.5 ft in diameter, and

(C) Not more than 20% of the rock is less than 2" in diameter. No rippable rock will be permitted.

Page 10-40, Tables 1018-1 and 1018-2, PIEDMONT, WESTERN AND COASTAL AREA CRITERIA FOR ACCEPTANCE OF BORROW MATERIAL, under second column in both tables, replace second row with the following:

Acceptable, but not to be used in the top 3 ft of embankment or backfill

Page 10-46, Article 1024-1, PORTLAND CEMENT, line 33, add the following as the ninth paragraph:

Use Type IL blended cement that meets AASHTO M 240, except that the limestone content is limited to between 5 and 12% by weight and the constituents shall be interground. Class F fly ash can replace a portion of Type IL blended cement and shall be replaced as outlined in Subarticle 1000-4(I) for Portland cement. For mixes that contain cement with alkali content between 0.6% and 1.0% and for mixes that contain a reactive aggregate documented by the Department, use a pozzolan in the amount shown in Table 1024-1.

Page 10-46, Table 1024-1, POZZOLANS FOR USE IN PORTLAND CEMENT CONCRETE, replace with the following:

TABLE 1024-1
POZZOLANS FOR USE IN PORTLAND CEMENT CONCRETE

Pozzolan	Rate
Class F Fly Ash	20% - 30% by weight of required cement content with 1.0 lb Class F fly ash per lb of cement replaced
Ground Granulated Blast Furnace Slag	35%-50% by weight of required cement content with 1.0 lb slag per lb of cement replaced
Microsilica	4%-8% by weight of required cement content with 1.0 lb microsilica per lb of cement replaced

Page 10-47, Subarticle 1024-3(B), Approved Sources, lines 16-18, replace the second sentence of the second paragraph with the following:

Tests shall be performed by AASHTO's designated National Transportation Product Evaluation Program (NTPEP) laboratory for concrete admixture testing.

Page 10-65, Article 1050-1, GENERAL, line 41, replace the first sentence with the following:

All fencing material and accessories shall meet Section 106.

Page 10-115, Subarticle 1074-7(B), Gray Iron Castings, lines 10-11, replace the first two sentences with the following:

Supply gray iron castings meeting all facets of AASHTO M 306 excluding proof load. Proof load testing will only be required for new casting designs during the design process, and conformance to M306 loading (40,000 lb.) will be required only when noted on the design documents.

Page 10-126, Table 1078-1, REQUIREMENTS FOR CONCRETE, replace with the following:

TABLE 1078-1
REQUIREMENTS FOR CONCRETE

Property	28 Day Design Compressive Strength 6,000 psi or less	28 Day Design Compressive Strength greater than 6,000 psi
Maximum Water/Cementitious Material Ratio	0.45	0.40
Maximum Slump without HRWR	3.5"	3.5"
Maximum Slump with HRWR	8"	8"
Air Content (upon discharge into forms)	5 + 2%	5 + 2%

Page 10-151, Article 1080-4, INSPECTION AND SAMPLING, lines 18-22, replace (B), (C) and (D) with the following:

(B) At least 3 panels prepared as specified in 5.5.10 of AASHTO M 300, Bullet Hole Immersion Test.

(C) At least 3 panels of 4"x6"x1/4" for the Elcometer Adhesion Pull Off Test, ASTM D4541.

(D) A certified test report from an approved independent testing laboratory for the Salt Fog Resistance Test, Cyclic Weathering Resistance Test, and Bullet Hole Immersion Test as specified in AASHTO M 300.

(E) A certified test report from an approved independent testing laboratory that the product has been tested for slip coefficient and meets AASHTO M253, Class B.

Page 10-161, Subarticle 1081-1(A), Classifications, lines 29-33, delete first 3 sentences of the description for Type 2 and replace with the following:

Type 2 - A low-modulus, general-purpose adhesive used in epoxy mortar repairs. It may be used to patch spalled, cracked or broken concrete where vibration, shock or expansion and contraction are expected.

Page 10-162, Subarticle 1081-1(A), Classifications, lines 4-7, delete the second and third sentences of the description for Type 3A. **Lines 16-22,** delete Types 6A, 6B and 6C.

Page 10-162, Subarticle 1081-1(B), Requirements, lines 26-30, replace the second paragraph with the following:

For epoxy resin systems used for embedding dowel bars, threaded rods, rebar, anchor bolts and other fixtures in hardened concrete, the manufacturer shall submit test results showing that the bonding system will obtain 125% of the specified required yield strength of the fixture. Furnish certification that, for the particular bolt grade, diameter and embedment depth required, the anchor system will not fail by adhesive failure and that there is no movement of the anchor bolt. For certification and anchorage, use 3,000 psi as the minimum Portland cement concrete compressive strength used in this test. Use adhesives that meet Section 1081.

List the properties of the adhesive on the container and include density, minimum and maximum temperature application, setting time, shelf life, pot life, shear strength and compressive strength.

Page 10-163, Table 1081-1, PROPERTIES OF MIXED EPOXY RESIN SYSTEMS, replace with the following:

TABLE 1081-1
PROPERTIES OF MIXED EPOXY RESIN SYSTEMS

Property	Type 1	Type 2	Type 3	Type 3A	Type 4A	Type 4B	Type 5
Viscosity-Poises at 77°F ± 2°F	Gel	10-30	25-75	Gel	40-150	40-150	1-6
Spindle No.	-	3	4	--	4	4	2
Speed (RPM)	-	20	20	--	10	10	50
Pot Life (Minutes)	20-50	30-60	20-50	5-50	40-80	40-80	20-60
Minimum Tensile Strength at 7 days (psi)	1,500	2,000	4,000	4,000	1,500	1,500	4,000
Tensile Elongation at 7 days (%)	30 min.	30 min.	2-5	2-5	5-15	5-15	2-5
Min. Compressive Strength of 2". mortar cubes at 24 hours	3,000 (Neat)	4,000-	6,000-	6,000 (Neat)	3,000	3,000	6,000
Min. Compressive Strength of 2" mortar cubes at 7 days	5,000 (Neat)	-	-	-	-	5,000	-
Maximum Water Absorption (%)	1.5	1.0	1.0	1.5	1.0	1.0	1.0
Min. Bond Strength Slant Shear Test at 14 days (psi)	1,500	1,500	2,000	2,000	1,500	1,500	1,500

Page 10-164, Subarticle 1081-1(E), Prequalification, lines 31-33, replace the second sentence of the first paragraph with the following:

Manufacturers choosing to supply material for Department jobs must submit an application through the Value Management Unit with the following information for each type and brand name:

Page 10-164, Subarticle 1081-1(E)(3), line 37, replace with the following:

(3) Type of the material in accordance with Articles 1081-1 and 1081-4,

Page 10-165, Subarticle 1081-1(E)(6), line 1, in the first sentence of the first paragraph replace "AASHTO M 237" with "the specifications".

Page 10-165, Subarticle 1081-1(E), Prequalification, line 9-10, delete the second sentence of the last paragraph.

Page 10-165, Subarticle 1081-1(F), Acceptance, line 14, in the first sentence of the first paragraph replace "Type 1" with "Type 3".

Page 10-169, Subarticle 1081-3(G), Anchor Bolt Adhesives, delete this subarticle.

Page 10-170, Article 1081-3, HOT BITUMEN, line 9, add the following at the end of Section 1081:

1081-4 EPOXY RESIN ADHESIVE FOR BONDING TRAFFIC MARKINGS

(A) General

This section covers epoxy resin adhesive for bonding traffic markers to pavement surfaces.

(B) Classification

The types of epoxies and their uses are as shown below:

Type I – Rapid Setting, High Viscosity, Epoxy Adhesive. This type of adhesive provides rapid adherence to traffic markers to the surface of pavement.

Type II – Standard Setting, High Viscosity, Epoxy Adhesive. This type of adhesive is recommended for adherence of traffic markers to pavement surfaces when rapid set is not required.

Type III – Rapid Setting, Low Viscosity, Water Resistant, Epoxy Adhesive. This type of rapid setting adhesive, due to its low viscosity, is appropriate only for use with embedded traffic markers.

Type IV – Standard Set Epoxy for Blade Deflecting-Type Plowable Markers.

(C) Requirements

Epoxies shall conform to the requirements set forth in AASHTO M 237.

(D) Prequalification

Refer to Subarticle 1081-1(E).

(E) Acceptance

Refer to Subarticle 1081-1(F).

Page 10-173, Article 1084-2, STEEL SHEET PILES, lines 37-38, replace first paragraph with the following:

Steel sheet piles detailed for permanent applications shall be hot rolled and meet ASTM A572 or ASTM A690 unless otherwise required by the plans. Steel sheet piles shall be coated as required by the plans. Galvanized sheet piles shall be coated in accordance with Section 1076. Metallized sheet piles shall be metallized in accordance to the Project Special Provision "Thermal Sprayed Coatings (Metallization)" with an 8 mil, 99.9% aluminum alloy coating and a 0.5 mil seal coating. Any portion of the metallized sheet piling encased in concrete shall receive a barrier coat. The barrier coat shall be an approved waterborne coating with a low-viscosity which readily absorbs into the pores of the aluminum thermal sprayed coating. The waterborne coating shall be applied at a spreading rate that results in a theoretical 1.5 mil dry film thickness. The manufacturer shall issue a letter of certification that the resin chemistry of the waterborne coating is compatible with the 99.9% aluminum thermal sprayed alloy and suitable for tidal water applications.

Page 10-174, Subarticle 1086-1(B)(1), Epoxy, lines 18-24, replace with the following:

The epoxy shall meet Article 1081-4.

The 2 types of epoxy adhesive which may be used are Type I, Rapid Setting, and Type II, Standard Setting. Use Type II when the pavement temperature is above 60°F or per the manufacturer's recommendations whichever is more stringent. Use Type I when the pavement temperature is between 50°F and 60°F or per the manufacturer's recommendations whichever is more stringent. Epoxy adhesive Type I, Cold Set, may be used to attach temporary pavement markers to the pavement surface when the pavement temperature is between 32°F and 50°F or per the manufacturer's recommendations whichever is more stringent.

Page 10-175, Subarticle 1086-2(E), Epoxy Adhesives, line 27, replace "Section 1081" with "Article 1081-4".

Page 10-177, Subarticle 1086-3(E), Epoxy Adhesives, line 22, replace "Section 1081" with "Article 1081-4".

Page 10-179, Subarticle 1087-4(A), Composition, lines 39-41, replace the third paragraph with the following:

All intermixed and drop-on glass beads shall not contain more than 75 ppm arsenic or 200 ppm lead.

Page 10-180, Subarticle 1087-4(B), Physical Characteristics, line 8, replace the second paragraph with the following:

All intermixed and drop-on glass beads shall comply with NCGS § 136-30.2 and 23 USC § 109(r).

Page 10-181, Subarticle 1087-7(A), Intermixed and Drop-on Glass Beads, line 24, add the following after the first paragraph:

Use X-ray Fluorescence for the normal sampling procedure for intermixed and drop-on beads, without crushing, to check for any levels of arsenic and lead. If any arsenic or lead is detected, the sample shall be crushed and repeat the test using X-ray Fluorescence. If the X-ray Fluorescence test shows more than a LOD of 5 ppm, test the beads using United States Environmental Protection Agency Method 6010B, 6010C or 3052 for no more than 75 ppm arsenic or 200 ppm lead.

SELECT MATERIAL, CLASS III, TYPE 3:

(1-17-12) 1016, 1044 SP10 R05

Revise the *2012 Standard Specifications* as follows:

Page 10-39, Article 1016-3, CLASS III, add the following after line 14:

Type 3 Select Material

Type 3 select material is a natural or manufactured fine aggregate material meeting the following gradation requirements and as described in Sections 1005 and 1006:

Percentage of Total by Weight Passing							
3/8"	#4	#8	#16	#30	#50	#100	#200
100	95-100	65-100	35-95	15-75	5-35	0-25	0-8

Page 10-39, Article 1016-3, CLASS III, line 15, replace “either type” with “Type 1, Type 2 or Type 3”.

Page 10-62, Article 1044-1, line 36, delete the sentence and replace with the following:

Subdrain fine aggregate shall meet Class III select material, Type 1 or Type 3.

Page 10-63, Article 1044-2, line 2, delete the sentence and replace with the following:

Subdrain coarse aggregate shall meet Class V select material.

SHOULDER AND SLOPE BORROW:

(3-19-13) 1019 SP10 R10

Use soil in accordance with Section 1019 of the *2012 Standard Specifications*. Use soil consisting of loose, friable, sandy material with a PI greater than 6 and less than 25 and a pH ranging from 5.5 to 7.0.

Soil with a pH ranging from 4.0 to 5.5 will be accepted without further testing if additional limestone is provided in accordance with the application rates shown in Table 1019-1A. Soil type is identified during the soil analysis. Soils with a pH above 7.0 require acidic amendments to be added. Submit proposed acidic amendments to the Engineer for review and approval. Soils with a pH below 4.0 or that do not meet the PI requirements shall not be used.

pH TEST RESULT	Sandy Soils Additional Rate (lbs. / Acre)	Silt Loam Soils Additional Rate (lbs. / Acre)	Clay Loam Soils Additional Rate (lbs. / Acre)
4.0 - 4.4	1,000	4,000	6,000
4.5 - 4.9	500	3,000	5,000
5.0 - 5.4	NA	2,000	4,000

Note: Limestone application rates shown in this table are in addition to the standard rate of 4000 lbs. / acre required for seeding and mulching.

No direct payment will be made for providing additional lime or acidic amendments for Ph adjustment.

GROUT PRODUCTION AND DELIVERY:

(3-17-15) 1003 SP10 R20

Revise the *2012 Standard Specifications* as follows:

Replace Section 1003 with the following:

SECTION 1003
GROUT PRODUCTION AND DELIVERY

1003-1 DESCRIPTION

This section addresses cement grout to be used for structures, foundations, retaining walls, concrete barriers, embankments, pavements and other applications in accordance with the contract. Produce non-metallic grout composed of Portland cement and water and at the Contractor's option or as required, aggregate and pozzolans. Include chemical admixtures as required or needed. Provide sand cement or neat cement grout as required. Define "sand cement grout" as grout with only fine aggregate and "neat cement grout" as grout without aggregate.

The types of grout with their typical uses are as shown below:

Type 1 – A cement grout with only a 3-day strength requirement and a fluid consistency that is typically used for filling subsurface voids.

Type 2 – A nonshrink grout with strength, height change and flow conforming to ASTM C1107 that is typically used for foundations, ground anchors and soil nails.

Type 3 – A nonshrink grout with high early strength and freeze-thaw durability requirements that is typically used in pile blockouts, grout pockets, shear keys, dowel holes and recesses for concrete barriers and structures.

Type 4 – A neat cement grout with low strength, a fluid consistency and high fly ash content that is typically used for slab jacking.

Type 5 – A low slump, low mobility sand cement grout with minimal strength that is typically used for compaction grouting.

1003-2 MATERIALS

Refer to Division 10.

Item	Section
Chemical Admixtures	1024-3
Fine Aggregate	1014-1
Fly Ash	1024-5
Ground Granulated Blast Furnace Slag	1024-6
Portland Cement	1024-1
Silica Fume	1024-7
Water	1024-4

Do not use grout that contains soluble chlorides or more than 1% soluble sulfate. At the Contractor's option, use an approved packaged grout instead of the materials above except for water. Use packaged grouts that are on the NCDOT Approved Products List.

Use admixtures for grout that are on the NCDOT Approved Products List or other admixtures in accordance with Subarticle 1024-3(E) except do not use concrete additives or unclassified or other admixtures in Type 4 or 5 grout. Use Class F fly ash for Type 4 grout and Type II Portland cement for Type 5 grout.

Use well graded rounded aggregate with a gradation, liquid limit (LL) and plasticity index (PI) that meet Table 1003-1 for Type 5 grout. Fly ash may be substituted for a portion of the fines in the aggregate. Do not use any other pozzolans in Type 5 grout.

TABLE 1003-1
AGGREGATE REQUIREMENTS FOR TYPE 5 GROUT

Gradation		Maximum Liquid Limit	Maximum Plasticity Index
Sieve Designation per AASHTO M 92	**Percentage Passing (% by weight)**		
3/8"	100	N/A	N/A
No. 4	70 – 95		
No. 8	50 – 90		
No. 16	30 – 80		
No. 30	25 – 70		
No. 50	20 – 50		
No. 100	15 – 40		
No. 200	10 – 30	25	10

1003-3 COMPOSITION AND DESIGN

When using an approved packaged grout, a grout mix design submittal is not required. Otherwise, submit proposed grout mix designs for each grout mix to be used in the work. Mixes for all grout shall be designed by a Certified Concrete Mix Design Technician or an Engineer licensed by the State of North Carolina. Mix proportions shall be determined by a testing laboratory approved by the Department. Base grout mix designs on laboratory trial batches that meet Table 1003-2 and this section. With permission, the Contractor may use a quantity of chemical admixture within the range shown on the current list of approved admixtures maintained by the Materials and Tests Unit.

Submit grout mix designs in terms of saturated surface dry weights on Materials and Tests Form 312U at least 35 days before proposed use. Adjust batch proportions to compensate for surface moisture contained in the aggregates at the time of batching. Changes in the saturated surface dry mix proportions will not be permitted unless revised grout mix designs have been submitted to the Engineer and approved.

Accompany Materials and Tests Form 312U with a listing of laboratory test results of compressive strength, density and flow or slump and if applicable, aggregate gradation, durability and height change. List the compressive strength of at least three 2" cubes at the age of 3 and 28 days.

The Engineer will review the grout mix design for compliance with the contract and notify the Contractor as to its acceptability. Do not use a grout mix until written notice has been received. Acceptance of the grout mix design or use of approved packaged grouts does not relieve the Contractor of his responsibility to furnish a product that meets the contract. Upon written request from the Contractor, a grout mix design accepted and used satisfactorily on any Department project may be accepted for use on other projects.

Perform laboratory tests in accordance with the following test procedures:

Property	**Test Method**
Aggregate Gradation[A]	AASHTO T 27
Compressive Strength	AASHTO T 106
Density (Unit Weight)	AASHTO T 121, AASHTO T 133[B], ANSI/API RP[C] 13B-1[B] (Section 4, Mud Balance)
Durability	AASHTO T 161[D]
Flow	ASTM C939 (Flow Cone)
Height Change	ASTM C1090[E]
Slump	AASHTO T 119

A. Applicable to grout with aggregate.
B. Applicable to Neat Cement Grout.
C. American National Standards Institute/American Petroleum Institute Recommended Practice.
D. Procedure A (Rapid Freezing and Thawing in Water) required.
E. Moist room storage required.

1003-4 GROUT REQUIREMENTS

Provide grout types in accordance with the contract. Use grouts with properties that meet Table 1003-2. The compressive strength of the grout will be considered the average compressive strength test results of three 2" cubes at each age. Make cubes that meet AASHTO T 106 from the grout delivered for the work or mixed on-site. Make cubes at such frequencies as the Engineer may determine and cure them in accordance with AASHTO T 106.

TABLE 1003-2 GROUT REQUIREMENTS					
Type of Grout	**Minimum Compressive Strength at**		**Height Change at 28 days**	**Flow[A]/Slump[B]**	**Minimum Durability Factor**
	3 days	**28 days**			
1	3,000 psi	–	–	10 – 30 sec	–
2	Table 1[C]			Fluid Consistency[C]	–
3	5,000 psi	–	0 – 0.2%	Per Accepted Grout Mix Design/ Approved Packaged Grout	80
4[D]	600 psi	1,500 psi	–	10 – 26 sec	–
5	–	500 psi	–	1 – 3"	–

A. Applicable to Type 1 through 4 grouts.
B. Applicable to Type 5 grout.
C. ASTM C1107.
D. Use Type 4 grout with proportions by volume of 1 part cement and 3 parts fly ash.

1003-5 TEMPERATURE REQUIREMENTS

When using an approved packaged grout, follow the manufacturer's instructions for grout and air temperature at the time of placement. Otherwise, the grout temperature at the time of placement shall be not less than 50°F nor more than 90°F. Do not place grout when the air temperature measured at the location of the grouting operation in the shade away from artificial heat is below 40°F.

1003-6 ELAPSED TIME FOR PLACING GROUT

Agitate grout continuously before placement. Regulate the delivery so the maximum interval between the placing of batches at the work site does not exceed 20 minutes. Place grout before exceeding the times in Table 1003-3. Measure the elapsed time as the time between adding the mixing water to the grout mix and placing the grout.

TABLE 1003-3 ELAPSED TIME FOR PLACING GROUT (with continuous agitation)		
Air or Grout Temperature, Whichever is Higher	**Maximum Elapsed Time**	
	No Retarding Admixture Used	**Retarding Admixture Used**
90°F or above	30 minutes	1 hr. 15 minutes
80°F through 89°F	45 minutes	1 hr. 30 minutes
79°F or below	60 minutes	1 hr. 45 minutes

1003-7 MIXING AND DELIVERY

Use grout free of any lumps and undispersed cement. When using an approved packaged grout, mix grout in accordance with the manufacturer's instructions. Otherwise, comply with Articles 1000-8 through 1000-12 to the extent applicable for grout instead of concrete.

GEOSYNTHETICS:

(2-16-16) 1056 SP10 R25

Revise the *2012 Standard Specifications* as follows:

Replace Section 1056 with the following:

SECTION 1056
GEOSYNTHETICS

1056-1 DESCRIPTION

Provide geosynthetics for subsurface drainage, separation, stabilization, reinforcement, erosion control, filtration and other applications in accordance with the contract. Use geotextiles, geocomposite drains and geocells that are on the NCDOT Approved Products List. Prefabricated geocomposite drains include sheet, strip and vertical drains (PVDs), i.e., "wick drains" consisting of a geotextile attached to and/or encapsulating a plastic drainage core. Geocells are comprised of ultrasonically welded polymer strips that when expanded form a 3D honeycomb grid that is typically filled with material to support vegetation.

If necessary or required, hold geotextiles and sheet drains in place with new wire staples, i.e., "sod staples" that meet Subarticle 1060-8(D) or new anchor pins. Use steel anchor pins with a diameter of at least 3/16" and a length of at least 18" and with a point at one end and a head at the other end that will retain a steel washer with an outside diameter of at least 1.5".

1056-2 HANDLING AND STORING

Load, transport, unload and store geosynthetics so geosynthetics are kept clean and free of damage. Label, ship and store geosynthetics in accordance with Section 7 of AASHTO M 288. Geosynthetics with defects, flaws, deterioration or damage will be rejected. Do not unwrap geosynthetics until just before installation. Do not leave geosynthetics exposed for more than 7 days before covering except for geosynthetics for temporary wall faces and erosion control.

1056-3 CERTIFICATIONS

Provide Type 1, Type 2 or Type 4 material certifications in accordance with Article 106-3 for geosynthetics. Define "minimum average roll value" (MARV) in accordance with ASTM D4439. Provide certifications with MARV for geosynthetic properties as required. Test geosynthetics using laboratories accredited by the Geosynthetic Accreditation Institute (GAI) to perform the required test methods. Sample geosynthetics in accordance with ASTM D4354.

1056-4 GEOTEXTILES

When required, sew geotextiles together in accordance with Article X1.1.4 of AASHTO M 288. Provide sewn seams with seam strengths meeting the required strengths for the geotextile type and class specified.

Provide geotextile types and classes in accordance with the contract. Geotextiles will be identified by the product name printed directly on the geotextile. When geotextiles are not marked with a product name or marked with only a manufacturing plant identification code, geotextiles will be identified by product labels attached to the geotextile wrapping. When identification is based on labels instead of markings, unwrap geotextiles just before use in the presence of the Engineer to confirm that the product labels on both ends of the outside of the geotextile outer wrapping match the labels affixed to both ends of the inside of the geotextile roll core. Partial geotextile rolls without the product name printed on the geotextile or product labels affixed to the geotextile roll core may not be used.

Use woven or nonwoven geotextiles with properties that meet Table 1056-1. Define “machine direction” (MD) and “cross-machine direction” (CD) in accordance with ASTM D4439.

TABLE 1056-1
GEOTEXTILE REQUIREMENTS

Property	**Requirement**					**Test Method**
	Type 1	**Type 2**	**Type 3[A]**	**Type 4**	**Type 5[B]**	
Typical Application	*Shoulder Drains*	*Under Rip Rap*	*Silt Fence Fabric*	*Soil Stabilization*	*Temporary Walls*	
Elongation (MD & CD)	≥ 50%	≥ 50%	≤ 25%	< 50%	< 50%	ASTM D4632
Grab Strength (MD & CD)	Table 1[D], Class 3	Table 1[D], Class 1	100 lb[C]	Table 1[D], Class 3	–	ASTM D4632
Tear Strength (MD & CD)			–			ASTM D4533
Puncture Strength			–			ASTM D6241
Ultimate Tensile Strength (MD & CD)	–	–	–	–	2,400 lb/ft[C] (unless required otherwise in the contract)	ASTM D4595
Permittivity	Table 2[D], 15% to 50% *in Situ* Soil Passing 0.075 mm	Table 6[D], 15% to 50% *in Situ* Soil Passing 0.075mm	Table 7[D]	Table 5[D]	0.20 sec^{-1}[C]	ASTM D4491
Apparent Opening Size					0.60 mm[E]	ASTM D4751
UV Stability (Retained Strength)					70%[C] (after 500 hr of exposure)	ASTM D4355

A. Minimum roll width of 36" required.
B. Minimum roll width of 13 ft required.
C. MARV per Article 1056-3.
D. AASHTO M 288.
E. Maximum average roll value.

1056-5 GEOCOMPOSITE DRAINS

Provide geocomposite drain types in accordance with the contract and with properties that meet Table 1056-2.

TABLE 1056-2 GEOCOMPOSITE DRAIN REQUIREMENTS				
Property	**Requirement**			**Test Method**
	Sheet Drain	**Strip Drain**	**Wick Drain**	
Width	≥ 12" (unless required otherwise in the contract)	12" ±1/4"	4" ±1/4"	N/A
In-Plane Flow Rate[A] (with gradient of 1.0 and 24-hour seating period)	6 gpm/ft @ applied normal compressive stress of 10 psi	15 gpm/ft @ applied normal compressive stress of 7.26 psi	1.5 gpm[B] @ applied normal compressive stress of 40 psi	ASTM D4716

A. MARV per Article 1056-3.
B. Per 4" drain width.

For sheet and strip drains, use accessories (e.g., pipe outlets, connectors, fittings, etc.) recommended by the Drain Manufacturer. Provide sheet and strip drains with Type 1 geotextiles heat bonded or glued to HDPE, polypropylene or high impact polystyrene drainage cores that meet Table 1056-3.

TABLE 1056-3 DRAINAGE CORE REQUIREMENTS			
Property	**Requirement (MARV)**		**Test Method**
	Sheet Drain	**Strip Drain**	
Thickness	1/4"	1"	ASTM D1777 or D5199
Compressive Strength	40 psi	30 psi	ASTM D6364

For wick drains with a geotextile wrapped around a corrugated drainage core and seamed to itself, use drainage cores with an ultimate tensile strength of at least 225 lb per 4" width in accordance with ASTM D4595 and geotextiles with properties that meet Table 1056-4.

TABLE 1056-4 WICK DRAIN GEOTEXTILE REQUIREMENTS		
Property	**Requirement**	**Test Method**
Elongation	≥ 50%	ASTM D4632
Grab Strength	Table 1[A], Class 3	ASTM D4632
Tear Strength		ASTM D4533
Puncture Strength		ASTM D6241
Permittivity	0.7 sec^{-1}.[B]	ASTM D4491
Apparent Opening Size (AOS)	Table 2[A], > 50% *in Situ* Soil Passing 0.075 mm	ASTM D4751
UV Stability (Retained Strength)		ASTM D4355

A. AASHTO M 288.
B. MARV per Article 1056-3.

For wick drains with a geotextile fused to both faces of a corrugated drainage core along the peaks of the corrugations, use wick drains with an ultimate tensile strength of at least 1,650 lb/ft in accordance with ASTM D4595 and geotextiles with a permittivity, AOS and UV stability that meet Table 1056-4.

1056-6 GEOCELLS

Geocells will be identified by product labels attached to the geocell wrapping. Unwrap geocells just before use in the presence of the Engineer. Previously opened geocell products will be rejected.

Manufacture geocells from virgin polyethylene resin with no more than 10% rework, also called "regrind", materials. Use geocells made from textured and perforated HDPE strips with an open area of 10% to 20% and properties that meet Table 1056-5.

TABLE 1056-5
GEOCELL REQUIREMENTS

Property	Minimum Requirement	Test Method
Cell Depth	4"	N/A
Sheet Thickness	50 mil -5%, +10%	ASTM D5199
Density	58.4 lb/cf	ASTM D1505
Carbon Black Content	1.5%	ASTM D1603 or D4218
ESCR[A]	5000 hr	ASTM D1693
Coefficient of Direct Sliding (with material that meets AASHTO M 145 for soil classification A-2)	0.85	ASTM D5321
Short-Term Seam (Peel) Strength (for 4" seam)	320 lb	USACE[C] Technical Report GL-86-19, Appendix A
Long-Term Seam (Hang) Strength[B] (for 4" seam)	160 lb	

A. Environmental Stress Crack Resistance.
B. Minimum test period of 168 hr with a temperature change from 74°F to 130°F in 1-hour cycles.
C. US Army Corps of Engineers.

Provide geocell accessories (e.g., stakes, pins, clips, staples, rings, tendons, anchors, deadmen, etc.) recommended by the Geocell Manufacturer.

TRUCK MOUNTED CHANGEABLE MESSAGE SIGNS:
(8-21-12) 1101.02 SP11 R10

Revise the *2012 Roadway Standard Drawings* as follows:

Drawing No. 1101.02, Sheet 12, TEMPORARY LANE CLOSURES, replace General Note #11 with the following:

11- TRUCK MOUNTED CHANGEABLE MESSAGE SIGNS (TMCMS) USED ON SHADOW VEHICLES FOR "IN LANE" ACTIVITIES SHALL BE A MINIMUM OF 43" X 73". THE DISPLAY PANEL SHALL HAVE FULL MATRIX CAPABILITY WITH THE CAPABILITY TO PROVIDE 2 MESSAGE LINES WITH 7 CHARACTERS PER LINE WITH A MINIMUM CHARACTER HEIGHT OF 18". FOR ADDITIONAL MESSAGING, CONTACT THE WORK ZONE TRAFFIC CONTROL SECTION.

12- TMCMS USED FOR ADVANCED WARNING ON VEHICLES LOCATED ON THE SHOULDER MAY BE SMALLER THAN 43" X 73". THE DISPLAY PANEL SHALL HAVE THE CAPABILITY TO PROVIDE 2 MESSAGE LINES WITH 7 CHARACTERS PER LINE WITH A MINIMUM CHARACTER HEIGHT OF 18". FOR ADDITIONAL MESSAGING, CONTACT THE WORK ZONE TRAFFIC CONTROL SECTION.

Drawing No. 1101.02, Sheet 13, TEMPORARY LANE CLOSURES, replace General Note #12 with the following:

12- TRUCK MOUNTED CHANGEABLE MESSAGE SIGNS (TMCMS) USED ON SHADOW VEHICLES FOR "IN LANE" ACTIVITIES SHALL BE A MINIMUM OF 43" X 73". THE DISPLAY PANEL SHALL HAVE FULL MATRIX CAPABILITY WITH THE CAPABILITY TO PROVIDE 2 MESSAGE LINES WITH 7 CHARACTERS PER LINE WITH A MINIMUM CHARACTER HEIGHT OF 18". FOR ADDITIONAL MESSAGING, CONTACT THE WORK ZONE TRAFFIC CONTROL SECTION.

13- TMCMS USED FOR ADVANCED WARNING ON VEHICLES LOCATED ON THE SHOULDER MAY BE SMALLER THAN 43" X 73". THE DISPLAY PANEL SHALL HAVE THE CAPABILITY TO PROVIDE 2 MESSAGE LINES WITH 7 CHARACTERS PER LINE WITH A MINIMUM CHARACTER HEIGHT OF 18". FOR ADDITIONAL MESSAGING, CONTACT THE WORK ZONE TRAFFIC CONTROL SECTION.

GROUT REFERENCES FOR UTILITY MANHOLES:

(8-18-15) 1525 SP15 R40

Revise the *2012 Standard Specifications* as follows:

Page 15-13, Article 1525-2, Materials, line 9, in the materials table, add the following:

Item	**Section**
Grout, Type 2	1003

Page 15-13, Article 1525-2, Materials, lines 20-21, replace the third paragraph after the materials table with the following:

Use Type 2 grout with properties that meet Table 1003-2 in the *Grout Production and Delivery* provision except provide grout with a plastic consistency in accordance with ASTM C1107.

Page 15-14, Subarticle 1525-3(B), Installation of Precast Units, line 22, in the second sentence of the first paragraph, replace "non-shrink grout." with "grout."

STANDARD SPECIAL PROVISION
AVAILABILITY OF FUNDS – TERMINATION OF CONTRACTS

(5-20-08) Z-2

General Statute 143C-6-11. (h) Highway Appropriation is hereby incorporated verbatim in this contract as follows:

(h) Amounts Encumbered. – Transportation project appropriations may be encumbered in the amount of allotments made to the Department of Transportation by the Director for the estimated payments for transportation project contract work to be performed in the appropriation fiscal year. The allotments shall be multiyear allotments and shall be based on estimated revenues and shall be subject to the maximum contract authority contained in *General Statute 143C-6-11(c)*. Payment for transportation project work performed pursuant to contract in any fiscal year other than the current fiscal year is subject to appropriations by the General Assembly. Transportation project contracts shall contain a schedule of estimated completion progress, and any acceleration of this progress shall be subject to the approval of the Department of Transportation provided funds are available. The State reserves the right to terminate or suspend any transportation project contract, and any transportation project contract shall be so terminated or suspended if funds will not be available for payment of the work to be performed during that fiscal year pursuant to the contract. In the event of termination of any contract, the contractor shall be given a written notice of termination at least 60 days before completion of scheduled work for which funds are available. In the event of termination, the contractor shall be paid for the work already performed in accordance with the contract specifications.

Payment will be made on any contract terminated pursuant to the special provision in accordance with Subarticle 108-13(E) of the *2012 Standard Specifications*.

STANDARD SPECIAL PROVISION
NCDOT GENERAL SEED SPECIFICATION FOR SEED QUALITY

(5-17-11) Z-3

Seed shall be sampled and tested by the North Carolina Department of Agriculture and Consumer Services, Seed Testing Laboratory. When said samples are collected, the vendor shall supply an independent laboratory report for each lot to be tested. Results from seed so sampled shall be final. Seed not meeting the specifications shall be rejected by the Department of Transportation and shall not be delivered to North Carolina Department of Transportation warehouses. If seed has been delivered it shall be available for pickup and replacement at the supplier's expense.

Any re-labeling required by the North Carolina Department of Agriculture and Consumer Services, Seed Testing Laboratory, that would cause the label to reflect as otherwise specified herein shall be rejected by the North Carolina Department of Transportation.

Seed shall be free from seeds of the noxious weeds Johnsongrass, Balloonvine, Jimsonweed, Witchweed, Itchgrass, Serrated Tussock, Showy Crotalaria, Smooth Crotalaria, Sicklepod, Sandbur, Wild Onion, and Wild Garlic. Seed shall not be labeled with the above weed species on the seed analysis label. Tolerances as applied by the Association of Official Seed Analysts will NOT be allowed for the above noxious weeds except for Wild Onion and Wild Garlic.

Tolerances established by the Association of Official Seed Analysts will generally be recognized. However, for the purpose of figuring pure live seed, the found pure seed and found germination percentages as reported by the North Carolina Department of Agriculture and Consumer Services, Seed Testing Laboratory will be used. Allowances, as established by the NCDOT, will be recognized for minimum pure live seed as listed on the following pages.

The specifications for restricted noxious weed seed refers to the number per pound as follows:

Restricted Noxious **Weed**	Limitations per Lb. Of Seed	Restricted Noxious **Weed**	Limitations per Lb. of Seed
Blessed Thistle	4 seeds	Cornflower (Ragged Robin)	27 seeds
Cocklebur	4 seeds	Texas Panicum	27 seeds
Spurred Anoda	4 seeds	Bracted Plantain	54 seeds
Velvetleaf	4 seeds	Buckhorn Plantain	54 seeds
Morning-glory	8 seeds	Broadleaf Dock	54 seeds
Corn Cockle	10 seeds	Curly Dock	54 seeds
Wild Radish	12 seeds	Dodder	54 seeds
Purple Nutsedge	27 seeds	Giant Foxtail	54 seeds
Yellow Nutsedge	27 seeds	Horsenettle	54 seeds
Canada Thistle	27 seeds	Quackgrass	54 seeds
Field Bindweed	27 seeds	Wild Mustard	54 seeds
Hedge Bindweed	27 seeds		

Seed of Pensacola Bahiagrass shall not contain more than 7% inert matter, Kentucky Bluegrass, Centipede and Fine or Hard Fescue shall not contain more than 5% inert matter whereas a maximum of 2% inert matter will be allowed on all other kinds of seed. In addition, all seed shall

not contain more than 2% other crop seed nor more than 1% total weed seed. The germination rate as tested by the North Carolina Department of Agriculture shall not fall below 70%, which includes both dormant and hard seed. Seed shall be labeled with not more than 7%, 5% or 2% inert matter (according to above specifications), 2% other crop seed and 1% total weed seed.

Exceptions may be made for minimum pure live seed allowances when cases of seed variety shortages are verified. Pure live seed percentages will be applied in a verified shortage situation. Those purchase orders of deficient seed lots will be credited with the percentage that the seed is deficient.

FURTHER SPECIFICATIONS FOR EACH SEED GROUP ARE GIVEN BELOW:

Minimum 85% pure live seed; maximum 1% total weed seed; maximum 2% total other crop seed; maximum 144 restricted noxious weed seed per pound. Seed less than 83% pure live seed will not be approved.

Sericea Lespedeza
Oats (seeds)

Minimum 80% pure live seed; maximum 1% total weed seed; maximum 2% total other crop; maximum 144 restricted noxious weed seed per pound. Seed less than 78% pure live seed will not be approved.

Tall Fescue (all approved varieties)
Kobe Lespedeza
Korean Lespedeza
Weeping Lovegrass
Carpetgrass
Bermudagrass
Browntop Millet
German Millet – Strain R
Clover – Red/White/Crimson

Minimum 78% pure live seed; maximum 1% total weed seed; maximum 2% total other crop seed; maximum 144 restricted noxious weed seed per pound. Seed less than 76% pure live seed will not be approved.

Common or Sweet Sundangrass

Minimum 76% pure live seed; maximum 1% total weed seed; maximum 2% total other crop seed; maximum 144 restricted noxious weed seed per pound. Seed less than 74% pure live seed will not be approved.

Rye (grain; all varieties)
Kentucky Bluegrass (all approved varieties)
Hard Fescue (all approved varieties)
Shrub (bicolor) Lespedeza

Minimum 70% pure live seed; maximum 1% total weed seed; maximum 2% total other crop seed; maximum 144 noxious weed seed per pound. Seed less than 70% pure live seed will not be approved.

Centipedegrass
Crownvetch
Pensacola Bahiagrass
Creeping Red Fescue
Japanese Millet
Reed Canary Grass
Zoysia

Minimum 70% pure live seed; maximum 1% total weed seed; maximum 2% total other crop seed; maximum 5% inert matter; maximum 144 restricted noxious weed seed per pound.

Barnyard Grass
Big Bluestem
Little Bluestem
Bristly Locust
Birdsfoot Trefoil
Indiangrass
Orchardgrass
Switchgrass
Yellow Blossom Sweet Clover

STANDARD SPECIAL PROVISION

ERRATA

(1-17-12) (Rev. 04-21-15) Z-4

Revise the *2012 Standard Specifications* as follows:

Division 2

Page 2-7, line 31, Article 215-2 Construction Methods, replace "Article 107-26" with "Article 107-25".

Page 2-17, Article 226-3, Measurement and Payment, line 2, delete "pipe culverts,".

Page 2-20, Subarticle 230-4(B), Contractor Furnished Sources, change references as follows: **Line 1,** replace "(4) Buffer Zone" with "(c) Buffer Zone"; **Line 12,** replace "(5) Evaluation for Potential Wetlands and Endangered Species" with "(d) Evaluation for Potential Wetlands and Endangered Species"; and **Line 33,** replace "(6) Approval" with "(4) Approval".

Division 3

Page 3-1, after line 15, Article 300-2 Materials, replace "1032-9(F)" with "1032-6(F)".

Division 4

Page 4-77, line 27, Subarticle 452-3(C) Concrete Coping, replace "sheet pile" with "reinforcement".

Division 6

Page 6-7, line 31, Article 609-3 Field Verification of Mixture and Job Mix Formula Adjustments, replace "30" with "45".

Page 6-10, line 42, Subarticle 609-6(C)(2), replace "Subarticle 609-6(E)" with "Subarticle 609-6(D)".

Page 6-11, Table 609-1 Control Limits, replace "Max. Spec. Limit" for the Target Source of $P_{0.075}/P_{be}$ Ratio with "1.0".

Page 6-40, Article 650-2 Materials, replace "Subarticle 1012-1(F)" with "Subarticle 1012-1(E)"

Division 7

Page 7-1, Article 700-3, CONCRETE HAULING EQUIPMENT, line 33, replace "competion" with "completion".

Division 8

Page 8-23, line 10, Article 838-2 Materials, replace "Portland Cement Concrete, Class B" with "Portland Cement Concrete, Class A".

Division 10

Page 10-166, Article 1081-3 Hot Bitumen, replace "Table 1081-16" with "Table 1081-2", replace "Table 1081-17" with "Table 1081-3", and replace "Table 1081-18" with "Table 1081-4".

Division 12

Page 12-7, Table 1205-3, add "FOR THERMOPLASTIC" to the end of the title.
Page 12-8, Subarticle 1205-5(B), line 13, replace "Table 1205-2" with "Table 1205-4".
Page 12-8, Table 1205-4 and 1205-5, replace "THERMOPLASTIC" in the title of these tables with "POLYUREA".
Page 12-9, Subarticle 1205-6(B), line 21, replace "Table 1205-4" with "Table 1205-6".
Page 12-11, Subarticle 1205-8(C), line 25, replace "Table 1205-5" with "Table 1205-7".

Division 15

Page 15-4, Subarticle 1505-3(F) Backfilling, line 26, replace "Subarticle 235-4(C)" with "Subarticle 235-3(C)".
Page 15-6, Subarticle 1510-3(B), after line 21, replace the allowable leakage formula with the following: $\mathbf{W=LD\sqrt{P} \div 148{,}000}$
Page 15-6, Subarticle 1510-3(B), line 32, delete "may be performed concurrently or" and replace with "shall be performed".
Page 15-17, Subarticle 1540-3(E), line 27, delete "Type 1".

Division 17

Page 17-26, line 42, Subarticle 1731-3(D) Termination and Splicing within Interconnect Center, delete this subarticle.

Revise the *2012 Roadway Standard Drawings* as follows:

1633.01 Sheet 1 of 1, English Standard Drawing for Matting Installation, replace "1633.01" with "1631.01".

STANDARD SPECIAL PROVISION

PLANT AND PEST QUARANTINES
(Imported Fire Ant, Gypsy Moth, Witchweed, Emerald Ash Borer, And Other Noxious Weeds)

(3-18-03) (Rev. 12-20-16) Z-04a

Within Quarantined Area

This project may be within a county regulated for plant and/or pests. If the project or any part of the Contractor's operations is located within a quarantined area, thoroughly clean all equipment prior to moving out of the quarantined area. Comply with federal/state regulations by obtaining a certificate or limited permit for any regulated article moving from the quarantined area.

Originating in a Quarantined County

Obtain a certificate or limited permit issued by the N.C. Department of Agriculture/United States Department of Agriculture. Have the certificate or limited permit accompany the article when it arrives at the project site.

Contact

Contact the N.C. Department of Agriculture/United States Department of Agriculture at 1-800-206-9333, 919-707-3730, or *http://www.ncagr.gov/plantindustry/* to determine those specific project sites located in the quarantined area or for any regulated article used on this project originating in a quarantined county.

Regulated Articles Include

1. Soil, sand, gravel, compost, peat, humus, muck, and decomposed manure, separately or with other articles. This includes movement of articles listed above that may be associated with cut/waste, ditch pulling, and shoulder cutting.
2. Plants with roots including grass sod.
3. Plant crowns and roots.
4. Bulbs, corms, rhizomes, and tubers of ornamental plants.
5. Hay, straw, fodder, and plant litter of any kind.
6. Clearing and grubbing debris.
7. Used agricultural cultivating and harvesting equipment.
8. Used earth-moving equipment.
9. Any other products, articles, or means of conveyance, of any character, if determined by an inspector to present a hazard of spreading imported fire ant, gypsy moth, witchweed, emerald ash borer, or other noxious weeds.

STANDARD SPECIAL PROVISION

MINIMUM WAGES

(7-21-09) Z-5

FEDERAL: The Fair Labor Standards Act provides that with certain exceptions every employer shall pay wages at the rate of not less than SEVEN DOLLARS AND TWENTY FIVE CENTS ($7.25) per hour.

STATE: The North Carolina Minimum Wage Act provides that every employer shall pay to each of his employees, wages at a rate of not less than SEVEN DOLLARS AND TWENTY FIVE CENTS ($7.25) per hour.

The minimum wage paid to all skilled labor employed on this contract shall be SEVEN DOLLARS AND TWENTY FIVE CENTS ($7.25) per hour.

The minimum wage paid to all intermediate labor employed on this contract shall be SEVEN DOLLARS AND TWENTY FIVE CENTS ($7.25) per hour.

The minimum wage paid to all unskilled labor on this contract shall be SEVEN DOLLARS AND TWENTY FIVE CENTS ($7.25) per hour.

This determination of the intent of the application of this act to the contract on this project is the responsibility of the Contractor.

The Contractor shall have no claim against the Department of Transportation for any changes in the minimum wage laws, Federal or State. It is the responsibility of the Contractor to keep fully informed of all Federal and State Laws affecting his contract.

STANDARD SPECIAL PROVISION

AWARD OF CONTRACT

(6-28-77)(Rev 2/16/2016) Z-6

"The North Carolina Department of Transportation, in accordance with the provisions of *Title VI of the Civil Rights Act of 1964* (78 Stat. 252) and the Regulations of the Department of Transportation (*49 C.F.R., Part 21*), issued pursuant to such act, hereby notifies all bidders that it will affirmatively insure that the contract entered into pursuant to this advertisement will be awarded to the lowest responsible bidder without discrimination on the ground of race, color, or national origin".

TITLE VI AND NONDISCRIMINATION

I. Title VI Assurance

During the performance of this contract, the contractor, for itself, its assignees and successors in interest (hereinafter referred to as the "contractor") agrees as follows:

(1) Compliance with Regulations: The contractor shall comply with the Regulation relative to nondiscrimination in Federally-assisted programs of the Department of Transportation (hereinafter, "DOT") Title 49, Code of Federal Regulations, Part 21, as they may be amended from time to time, (hereinafter referred to as the Regulations), which are herein incorporated by reference and made a part of this contract.

(2) Nondiscrimination: The Contractor, with regard to the work performed by it during the contract, shall not discriminate on the grounds of race, color, or national origin in the selection and retention of subcontractors, including procurements of materials and leases of equipment. The contractor shall not participate either directly or indirectly in the discrimination prohibited by section 21.5 of the Regulations, including employment practices when the contract covers a program set forth in Appendix B of the Regulations.

(3) Solicitations for Subcontractors, Including Procurements of Materials and Equipment: In all solicitations either by competitive bidding or negotiation made by the contractor for work to be performed under a subcontract, including procurements of materials or leases of equipment, each potential subcontractor or supplier shall be notified by the contractor of the contractor's obligations under this contract and the Regulations relative to nondiscrimination on the grounds of race, color, or national origin.

(4) Information and Reports: The contractor shall provide all information and reports required by the Regulations or directives issued pursuant thereto, and shall permit access to its books, records, accounts, other sources of information, and its facilities as may be determined by the North Carolina Department of Transportation (NCDOT) or the Federal Highway Administration (FHWA) to be pertinent to ascertain compliance with such Regulations, orders and instructions. Where any information required of a contractor is in the exclusive possession of another who fails or refuses to furnish this information the contractor shall so certify to the NCDOT, or the FHWA as appropriate, and shall set forth what efforts it has made to obtain the information.

(5) Sanctions for Noncompliance: In the event of the contractor's noncompliance with the nondiscrimination provisions of this contract, the NCDOT shall impose such contract sanctions as it or the FHWA may determine to be appropriate, including, but not limited to:

(a) Withholding of payments to the contractor under the contract until the contractor complies, and/or

(b) Cancellation, termination or suspension of the contract, in whole or in part.

(6) Incorporation of Provisions: The contractor shall include the provisions of paragraphs (1) through (6) in every subcontract, including procurements of materials and leases of equipment, unless exempt by the Regulations, or directives issued pursuant thereto.

The contractor shall take such action with respect to any subcontractor procurement as the NCDOT or the FHWA may direct as a means of enforcing such provisions including sanctions for noncompliance: provided, however, that, in the event a contractor becomes involved in, or is threatened with, litigation with a subcontractor or supplier as a result of such direction, the contractor may request the NCDOT to enter into such litigation to protect the interests of the NCDOT, and, in addition, the contractor may request the United States to enter into such litigation to protect the interests of the United States.

II. Title VI Nondiscrimination Program

Title VI of the 1964 Civil Rights Act, 42 U.S.C. 2000d, provides that: "No person in the United States shall, on the grounds of race, color, or national origin, be excluded from participation in, be denied the benefits of, or be subjected to discrimination under any program or activity receiving Federal financial assistance." The broader application of nondiscrimination law is found in other statutes, executive orders, and regulations (see Section III, Pertinent Nondiscrimination Authorities), which provide additional protections based on age, sex, disability and religion. In addition, the 1987 Civil Rights Restoration Act extends nondiscrimination coverage to all programs and activities of federal-aid recipients and contractors, including those that are not federally-funded.

Nondiscrimination Assurance

The North Carolina Department of Transportation (NCDOT) hereby gives assurance that no person shall on the ground of race, color, national origin, sex, age, and disability, be excluded from participation in, be denied the benefits of, or be otherwise subjected to discrimination under any program or activity conducted by the recipient, as provided by Title VI of the Civil Rights Act of 1964, the Civil Rights Restoration Act of 1987, and any other related Civil Rights authorities, whether those programs and activities are federally funded or not.

Obligation

During the performance of this contract, the Contractor and its subcontractors are responsible for complying with NCDOT's Title VI Program. The Contractor must ensure that NCDOT's Notice of Nondiscrimination is posted in conspicuous locations accessible to all employees and subcontractors on the jobsite, along with the Contractor's own Equal Employment Opportunity (EEO) Policy Statement. The Contractor shall physically incorporate this "**TITLE VI AND NONDISCRIMINATION**" language, in its entirety, into all its subcontracts on federally-assisted and state-funded NCDOT-owned projects, and ensure its inclusion by subcontractors into all subsequent lower tier subcontracts. The Contractor and its subcontractors shall also physically incorporate the **FHWA-1273**, in its entirety, into all subcontracts and subsequent lower tier subcontracts on **Federal-aid highway** construction contracts only. The Contractor is also responsible for making its subcontractors aware of NCDOT's Discrimination Complaints Process, as follows:

FILING OF COMPLAINTS

1. **Applicability** – These complaint procedures apply to the beneficiaries of the NCDOT's programs, activities, and services, including, but not limited to, members of the public, contractors, subcontractors, consultants, and other sub-recipients of federal and state funds.
2. **Eligibility** – Any person or class of persons who believes he/she has been subjected to discrimination or retaliation prohibited by any of the Civil Rights authorities, based upon race, color, sex, age, national origin, or disability, may file a written complaint with NCDOT's Civil Rights office. The law prohibits intimidation or retaliation of any sort. The complaint may be filed by the affected individual or a representative, and must be in writing.
3. **Time Limits and Filing Options** – A complaint must be filed no later than 180 calendar days after the following:
   - The date of the alleged act of discrimination; or
   - The date when the person(s) became aware of the alleged discrimination; or
   - Where there has been a continuing course of conduct, the date on which that conduct was discontinued or the latest instance of the conduct.

   Title VI and other discrimination complaints may be submitted to the following entities:
   - **North Carolina Department of Transportation**, Office of Equal Opportunity & Workforce Services (EOWS), External Civil Rights Section, 1511 Mail Service Center, Raleigh, NC 27699-1511; 919-508-1808 or toll free 800-522-0453
   - **US Department of Transportation**, Departmental Office of Civil Rights, External Civil Rights Programs Division, 1200 New Jersey Avenue, SE, Washington, DC 20590; 202-366-4070

     Federal Highway Administration, North Carolina Division Office, 310 New Bern Avenue, Suite 410, Raleigh, NC 27601, 919-747-7010

     Federal Highway Administration, Office of Civil Rights, 1200 New Jersey Avenue, SE, 8th Floor, E81-314, Washington, DC 20590, 202-366-0693 / 366-0752

     Federal Transit Administration, Office of Civil Rights, ATTN: Title VI Program Coordinator, East Bldg. 5th Floor – TCR, 1200 New Jersey Avenue, SE, Washington, DC 20590

     Federal Aviation Administration, Office of Civil Rights, 800 Independence Avenue, SW, Washington, DC 20591, 202-267-3258
   - **US Department of Justice**, Special Litigation Section, Civil Rights Division, 950 Pennsylvania Avenue, NW, Washington, DC 20530, 202-514-6255 or toll free 877-218-5228
4. **Format for Complaints –** Complaints must be in **writing** and **signed** by the complainant(s) or a representative and include the complainant's name, address, and telephone number. Complaints received by fax or e-mail will be acknowledged and processed. Allegations received by telephone will be reduced to writing and provided to the complainant for confirmation or revision before processing. Complaints will be accepted in other languages including Braille.
5. **Discrimination Complaint Form –** Contact NCDOT EOWS at the phone number above to receive a full copy of the Discrimination Complaint Form and procedures.
6. **Complaint Basis –** Allegations must be based on issues involving race, color, national origin, sex, age, or disability. The term "basis" refers to the complainant's membership in a protected group category. Contact this office to receive a Discrimination Complaint Form.

Protected Categories	Definition	Examples	Applicable Statutes and Regulations	
			FHWA	FTA
Race	An individual belonging to one of the accepted racial groups; or the perception, based usually on physical characteristics that a person is a member of a racial group	Black/African American, Hispanic/Latino, Asian, American Indian/Alaska Native, Native Hawaiian/Pacific Islander, White	Title VI of the Civil Rights Act of 1964; 49 CFR Part 21; 23 CFR 200	Title VI of the Civil Rights Act of 1964; 49 CFR Part 21; Circular 4702.1B
Color	Color of skin, including shade of skin within a racial group	Black, White, brown, yellow, etc.		
National Origin	Place of birth. Citizenship is not a factor. Discrimination based on language or a person's accent is also covered.	Mexican, Cuban, Japanese, Vietnamese, Chinese		
Sex	Gender	Women and Men	1973 Federal-Aid Highway Act	Title IX of the Education Amendments of 1972
Age	Persons of any age	21 year old person	Age Discrimination Act of 1975	
Disability	Physical or mental impairment, permanent or temporary, or perceived.	Blind, alcoholic, para-amputee, epileptic, diabetic, arthritic	Section 504 of the Rehabilitation Act of 1973; Americans with Disabilities Act of 1990	

III. Pertinent Nondiscrimination Authorities

During the performance of this contract, the contractor, for itself, its assignees, and successors in interest agrees to comply with the following non-discrimination statutes and authorities, including, but not limited to:

- Title VI of the Civil Rights Act of 1964 (42 U.S.C. § 2000d *et seq*., 78 stat. 252), (prohibits discrimination on the basis of race, color, national origin); and 49 CFR Part 21.
- The Uniform Relocation Assistance and Real Property Acquisition Policies Act of 1970, (42 U.S.C. § 4601), (prohibits unfair treatment of persons displaced or whose property has been acquired because of Federal or Federal-aid programs and projects);
- Federal-Aid Highway Act of 1973, (23 U.S.C. § 324 *et seq*.), (prohibits discrimination on the basis of sex);
- Section 504 of the Rehabilitation Act of 1973, (29 U.S.C. § 794 *et seq*.), as amended, (prohibits discrimination on the basis of disability); and 49 CFR Part 27;
- The Age Discrimination Act of 1975, as amended, (42 U.S.C. § 6101 *et seq*.), (prohibits discrimination on the basis of age);
- Airport and Airway Improvement Act of 1982, (49 USC § 471, Section 47123), as amended, (prohibits discrimination based on race, creed, color, national origin, or sex);
- The Civil Rights Restoration Act of 1987, (PL 100-209), (Broadened the scope, coverage and applicability of Title VI of the Civil Rights Act of 1964, The Age Discrimination Act of 1975 and Section 504 of the Rehabilitation Act of 1973, by expanding the definition of the terms

"programs or activities" to include all of the programs or activities of the Federal-aid recipients, sub-recipients and contractors, whether such programs or activities are Federally funded or not);

- Titles II and III of the Americans with Disabilities Act, which prohibit discrimination on the basis of disability in the operation of public entities, public and private transportation systems, places of public accommodation, and certain testing entities (42 U.S.C. §§ 12131 – 12189) as implemented by Department of Transportation regulations at 49 C.F.R. parts 37 and 38;
- The Federal Aviation Administration's Non-discrimination statute (49 U.S.C. § 47123) (prohibits discrimination on the basis of race, color, national origin, and sex);
- Executive Order 12898, Federal Actions to Address Environmental Justice in Minority Populations and Low-Income Populations, which ensures discrimination against minority populations by discouraging programs, policies, and activities with disproportionately high and adverse human health or environmental effects on minority and low-income populations;
- Executive Order 13166, Improving Access to Services for Persons with Limited English Proficiency, and resulting agency guidance, national origin discrimination includes discrimination because of limited English proficiency (LEP). To ensure compliance with Title VI, you must take reasonable steps to ensure that LEP persons have meaningful access to your programs (70 Fed. Reg. at 74087 to 74100);
- Title IX of the Education Amendments of 1972, as amended, which prohibits you from discriminating because of sex in education programs or activities (20 U.S.C. 1681 et seq).
- Title VII of the Civil Rights Act of 1964 (42 U.S.C. § 2000e *et seq.,* Pub. L. 88-352), (prohibits employment discrimination on the basis of race, color, religion, sex, or national origin);
- 49 CFR Part 26, regulation to ensure nondiscrimination in the award and administration of DOT-assisted contracts in the Department's highway, transit, and airport financial assistance programs, as regards the use of Disadvantaged Business Enterprises (DBEs);
- Form FHWA-1273, "Required Contract Provisions," a collection of contract provisions and proposal notices that are generally applicable to *all Federal-aid construction projects* and must be made a part of, and physically incorporated into, *all federally-assisted contracts*, as well as appropriate subcontracts and purchase orders, particularly Sections II (Nondiscrimination) and III (Nonsegregated Facilities).

STANDARD SPECIAL PROVISION

ON-THE-JOB TRAINING

(10-16-07) (Rev. 4-21-15) Z-10

Description

The North Carolina Department of Transportation will administer a custom version of the Federal On-the-Job Training (OJT) Program, commonly referred to as the Alternate OJT Program. All contractors (existing and newcomers) will be automatically placed in the Alternate Program. Standard OJT requirements typically associated with individual projects will no longer be applied at the project level. Instead, these requirements will be applicable on an annual basis for each contractor administered by the OJT Program Manager.

On the Job Training shall meet the requirements of 23 CFR 230.107 (b), 23 USC – Section 140, this provision and the On-the-Job Training Program Manual.

The Alternate OJT Program will allow a contractor to train employees on Federal, State and privately funded projects located in North Carolina. However, priority shall be given to training employees on NCDOT Federal-Aid funded projects.

Minorities and Women

Developing, training and upgrading of minorities and women toward journeyman level status is a primary objective of this special training provision. Accordingly, the Contractor shall make every effort to enroll minority and women as trainees to the extent that such persons are available within a reasonable area of recruitment. This training commitment is not intended, and shall not be used, to discriminate against any applicant for training, whether a member of a minority group or not.

Assigning Training Goals

The Department, through the OJT Program Manager, will assign training goals for a calendar year based on the contractors' past three years' activity and the contractors' anticipated upcoming year's activity with the Department. At the beginning of each year, all contractors eligible will be contacted by the Department to determine the number of trainees that will be assigned for the upcoming calendar year. At that time the Contractor shall enter into an agreement with the Department to provide a self-imposed on-the-job training program for the calendar year. This agreement will include a specific number of annual training goals agreed to by both parties. The number of training assignments may range from 1 to 15 per contractor per calendar year. The Contractor shall sign an agreement to fulfill their annual goal for the year.\

Training Classifications

The Contractor shall provide on-the-job training aimed at developing full journeyman level workers in the construction craft/operator positions. Preference shall be given to providing training in the following skilled work classifications:

Equipment Operators	Office Engineers
Truck Drivers	Estimators
Carpenters	Iron / Reinforcing Steel Workers
Concrete Finishers	Mechanics
Pipe Layers	Welders

The Department has established common training classifications and their respective training requirements that may be used by the contractors. However, the classifications established are not all-inclusive. Where the training is oriented toward construction applications, training will be allowed in lower-level management positions such as office engineers and estimators. Contractors shall submit new classifications for specific job functions that their employees are performing. The Department will review and recommend for acceptance to FHWA the new classifications proposed by contractors, if applicable. New classifications shall meet the following requirements:

Proposed training classifications are reasonable and realistic based on the job skill classification needs, and

The number of training hours specified in the training classification is consistent with common practices and provides enough time for the trainee to obtain journeyman level status.

The Contractor may allow trainees to be trained by a subcontractor provided that the Contractor retains primary responsibility for meeting the training and this provision is made applicable to the subcontract. However, only the Contractor will receive credit towards the annual goal for the trainee.

Where feasible, 25 percent of apprentices or trainees in each occupation shall be in their first year of apprenticeship or training. The number of trainees shall be distributed among the work classifications on the basis of the contractor's needs and the availability of journeymen in the various classifications within a reasonable area of recruitment.

No employee shall be employed as a trainee in any classification in which they have successfully completed a training course leading to journeyman level status or in which they have been employed as a journeyman.

Records and Reports

The Contractor shall maintain enrollment, monthly and completion reports documenting company compliance under these contract documents. These documents and any other information as requested shall be submitted to the OJT Program Manager.

Upon completion and graduation of the program, the Contractor shall provide each trainee with a certification Certificate showing the type and length of training satisfactorily completed.

Trainee Interviews

All trainees enrolled in the program will receive an initial and Trainee/Post graduate interview conducted by the OJT program staff.

Trainee Wages

Contractors shall compensate trainees on a graduating pay scale based upon a percentage of the prevailing minimum journeyman wages (Davis-Bacon Act). Minimum pay shall be as follows:

60 percent	of the journeyman wage for the first half of the training period
75 percent	of the journeyman wage for the third quarter of the training period
90 percent	of the journeyman wage for the last quarter of the training period

In no instance shall a trainee be paid less than the local minimum wage. The Contractor shall adhere to the minimum hourly wage rate that will satisfy both the NC Department of Labor (NCDOL) and the Department.

Achieving or Failing to Meet Training Goals

The Contractor will be credited for each trainee employed by him on the contract work who is currently enrolled or becomes enrolled in an approved program and who receives training for at least 50 percent of the specific program requirement. Trainees will be allowed to be transferred between projects if required by the Contractor's scheduled workload to meet training goals.

If a contractor fails to attain their training assignments for the calendar year, they may be taken off the NCDOT's Bidders List.

Measurement and Payment

No compensation will be made for providing required training in accordance with these contract documents.

STANDARD SPECIAL PROVISION

NAME CHANGE FOR NCDENR

(1-19-16) Z-11

Description

Wherever in the 2012 Standard Specifications, Project Special Provisions, Standard Special Provisions, Permits or Plans that reference is made to “NCDENR” or “North Carolina Department of Environment and Natural Resources”, replace with “NCDEQ” or “North Carolina Department of Environmental Quality” respectively, as the case may be.

PROJECT SPECIAL PROVISIONS

GEOTECHNICAL

SIMULATED BRICK FORM LINER FINISH (SPECIAL) GT-1.1 - GT-1.6

MSE RETAINING WALLS (SPECIAL) GT-2.1 - GT-2.12

DocuSigned by:
Geotechnical Engineering Unit
E06538624A11498...
11/14/2017

SIMULATED BRICK FORM LINER FINISH **(SPECIAL)**

1.0 GENERAL

The work covered by this special provision consists of constructing textured surfaces on formed reinforced concrete surfaces as indicated on the Plans and in this Special Provision. The Contractor shall furnish all materials, labor, equipment, and incidentals necessary for the construction of architectural concrete surface treatment using simulated brick masonry form liners (molds) and a compatible concrete coloring system.

The architectural concrete surface treatment should match the appearance (brick size and shape, color, and texture, pattern, and relief) of standard brick, in the project vicinity, or as directed by the State Historical Preservation Office. Grout pattern joints (mortar joints) and bed thickness should re-create the appearance and color of brick on the cast-in-place and/or precast concrete panels for MSE walls, cast-in-place concrete facing for Soldier Pile and Soil Nail Walls as indicated in the Plans, this Special Provision, or as directed by the Engineer.

2.0 SUBMITTALS

Shop Drawings - The Contractor shall submit for review and acceptance, plan and elevation views and details showing overall simulated brick pattern, joint locations, form tie locations, and end, edge or other special conditions. The drawings should include typical cross sections of applicable surfaces, joints, corners, brick relief, brick size, pitch/working line, mortar joint and bed depths. If necessary, the Contractor shall revise the shop drawings until the proposed form liner patterns and arrangement have been accepted by the State Historical Preservation Office. Shop drawings should be of sufficient scale to show the detail of all brick and joints patterns. The size of the sheets used for the shop drawings shall be 22" x 34" (560mm x 864mm).

The form liner shall be patterned shall be consistent with standard brick patterns. The line pattern shall conceal construction joint lines. Special attention should be given to details for wrapping form liners around corners.

Shop drawings shall be reviewed and accepted prior to fabrication of form liners.

Sample Panels – After the shop drawings have been reviewed and accepted by the Engineer, the Contractor shall construct 24” x 24” (610mm x 610mm) transportable sample panel(s) at the project site. The materials used in construction of the sample panel(s) shall comply with section 420 of the Standard Specifications. The sample panel(s) shall be constructed using approved form liners. Sample panels will be required for each different form liner pattern that is to be used on the project. Any sample panel that is not accepted by the Engineer is to be removed from the project site and a new sample panel produced at no additional expense to the Department.

Architectural surface treatments and patterns of the finished work shall achieve the same final effect as demonstrated on the accepted sample panel(s). Upon acceptance by the State

Historical Preservation Office, the sample panel(s) shall be used as the quality standard for the project. After the acceptance of the completed structure, the Contractor shall dispose of the sample panels as directed by the Engineer.

3.0 MATERIAL REQUIREMENTS

Form Liner – The form liner shall be a high quality, re-useable product manufactured of high strength urethane rubber or other approved material which attaches easily to the form work system, and shall not compress more than ¼" (6mm) when concrete is poured at a rate of 10 vertical feet (3 vertical meters) per hour. The form liners shall be removable without causing deterioration of the surface or underlying concrete.

The Contractor is required to use the same source of form liner for all required elements. The architectural concrete surface treatment should match the appearance (brick size and shape, texture, pattern and relief) of a standard pattern with a brick size of 7-5/8 inches by 2-1/4 inches, horizontal and vertical mortar joint with of ±0.4 inches and maximum joint relief depth of 1/4 inches. See below for pattern example.

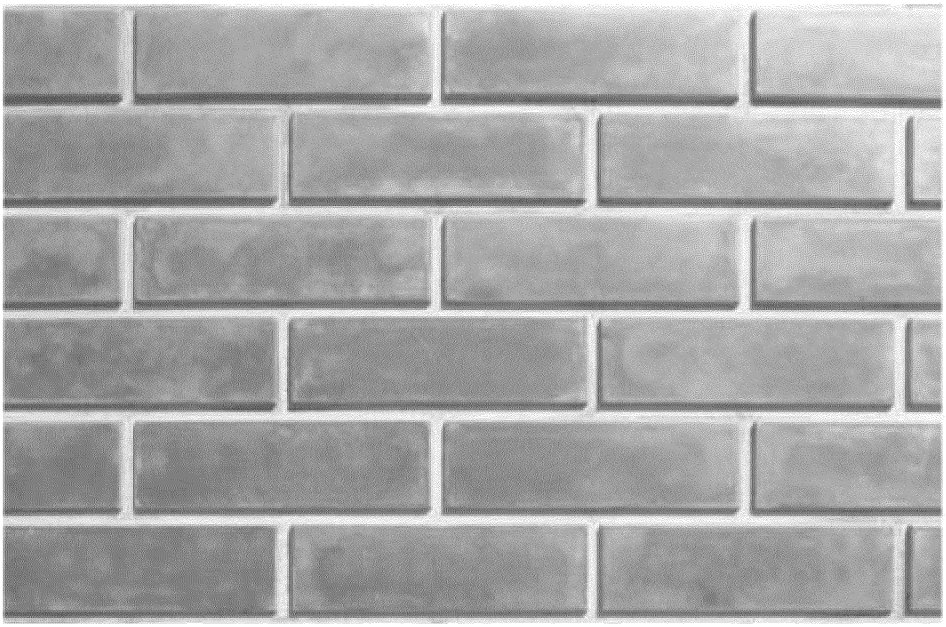

All texture is to be in addition to the nominal thickness of each element within tolerances.

The form liners are to be patterned as referenced above and as directed by the Engineer.

The Contractor may choose one of the following manufactures to supply the brick form liner textured surface treatment as specified above. One form liner pattern will be used on this project.

Hunt Valley Distributors, LLC
3705 Crondall Lane
Owings Mills, MD 21117
410.356.9677

Custom Rock International
1156 Homer Street
St. Paul, Minnesota 55116
800.637.2447

Fitzgerald Prime Form and Construction Supply Company
1341 East Pomona Street
Santa Ana, California 92705
714.547.6710
Fax 714.547.7958

Greenstreak Plastics
3400 Tree Court Industrial Boulevard
St. Louis, Missouri 63112
314.225.9400 / 800.325.9504
Fax 800.551.5145

Symons Corporation
200 East Touhy Avenue
Des Plaines, Illinois 60018
847.296.3200
Fax 847.635.9287

Form Release Agent – Form release agent shall be a nonstaining petroleum distillate free from water, asphaltic, and other insoluble residue, or an equivalent product. Form release agents shall be compatible with the color system applied and any special surface finish.

Form Ties - Form ties shall be set back a minimum of 2" (51 mm) from the finished concrete surface. The ties shall be designed so that all material in the device to a depth of at least 2" (51mm) back of the concrete face (bottom of simulated mortar groove) can be disengaged and removed without spalling or damaging the concrete. The Contractor shall submit the type of form ties to the Engineer for approval.

Concrete color system/stain – The final coloration of the wall is to be red in color and is to be approved by the Engineer prior to application. Color stains shall be a special penetrating stain mix as provided by the manufacturer. The stain shall create a surface finish that is breathable (allowing water vapor transmission), and that resists deterioration from water, acid, alkali, fungi, sunlight, or weathering. Stain mix shall meet the requirements for mildew resistance of Federal Test Method Standard 144, Method 6271, and requirements for weathering resistance of 1.000 hours accelerated exposure measures by Weatherometer in accordance with ASTM G 26. Color samples must be submitted for

approval. Concrete stains shall be supplied by one of the following or as approved by the Engineer.

Sherwin Williams
H & C Shield Plus
101 Prospect Ave., NW
Cleveland, OH 44115

Canyon Tone Stain
United Coatings
E 1901 Cataldo
Green Acres, Washington 90016

Cementrate Acrylic Stain
Fosroc, Inc.
55 Skyline Drive
Plainview, New York 11803

Hydroshield Stain
Robson-Downes Associates, Inc.
Oxford, Maryland 21654

Quality Standards - Manufacturer of simulated brick form liners and custom coloring system shall have at least five years experience making brick masonry molds and color stains to create formed concrete surfaces to match brick shapes, surface textures and colors. The Contractor shall schedule

A pre-installation conference with manufacturer representative and the Engineer to assure understanding of simulated brick masonry form liner use, color application, requirements for construction of sample panel(s), and to coordinate the work. The Contractor shall be required to disclose their source of simulated brick masonry manufacturer and final coloration contractor at the Preconstruction Conference.

4.0 CONSTRUCTION

Simulated Brick Form Liner System and Surface Finish

The Contractor shall demonstrate his workmanship by first constructing a sample panel of the simulated brick masonry form liner pattern and coloration. The sample panel shall be constructed on site a minimum of six weeks prior to the construction of the walls. The sample panel shall measure 3’ height by 5’ length by 8” thick and shall be unreinforced, vertically cast, and of concrete construction to determine the surface texture resulting from the use of form liners. Sample panels shall be cast, finished, and stained until approved by the Engineer. The approved sample panel shall remain on site as the basis for comparison for work constructed on the project. The architectural surface treatment and pattern of the finished work shall achieve the same final effect as demonstrated on

the approved sample panel. Upon completion of all work, the panel shall be removed from the site.

The simulated brick form liners are to be capable of withstanding anticipated concrete pour pressures without leakage or without causing physical or visual defects. The simulated brick form liners are to be removable without causing concrete surface deterioration or weakness in the substrate. Form release agents, form stripping methods, patching materials, as well as related construction are to be in accordance with the manufacturer's recommendations or as directed by the Engineer.

Linear butt joints shall be carefully blended into the approved pattern and finished off the final concrete surface. No visible vertical or horizontal seams or conspicuous form marks created by butt joining will be permitted.

The Contractor shall submit the type of form ties to be used in this construction to the Engineer for approval prior to use. Form tie holes shall be finished in accordance with standard concreting practices and shall be acceptable to the Engineer. All patching material shall exactly match the color and appearance of the poured concrete surface.

Concrete surfaces shall be clean, free of laitance, dirt, dust, grease, efflorescence, paint, or other foreign material, following manufacturer's specifications for surface preparation prior to application of color stain. The surface area shall also be free of blemishes, discolorations, surface voids, and unnatural form marks. The Contractor is advised that sandblasting will not be allowed for cleaning concrete surfaces. Pressure washing for removal of laitance shall be used.

The contractor shall provide a Color Application Artist who is trained in the special techniques to achieve realistic surface appearances, if requested by the Engineer. To avoid contaminating or damaging the wall surfaces, color stain application shall be scheduled when all concrete work is completed, the concrete has cured a minimum of 28 days, the surface has been determined to be acceptable for coloring, and after adjacent earthwork is complete. The Contractor is to coordinate coloring applications without interference from other work. The Contractor is required to apply coloring to an appropriate test area of 50 square feet and as designated by the Engineer, which will serve as a quality standard for the remaining surface to be colored. Upon approval of the test area by the Engineer, the remaining surfaces may be colored. Stains shall be applied when ambient air temperatures are in accordance with manufacturer's specifications or as directed by the Engineer. The number of coats of stain applied shall be in accordance with manufacturer's specifications or as directed by the Engineer. Treated surfaces located adjacent to exposed soil or pavement shall be temporarily covered to prevent dirt or soil splatter from rain.

Following the completion of all work, repairs of any damage made by other construction operations shall be made to the form lined and colored surfaces as directed by the Engineer.

Experience and Qualifications - The Contractor shall have a minimum of three consecutive years experience in architectural concrete surface treatment construction on

similar types of projects. The Contractor shall furnish to the Engineer 5 references who were responsible for supervision of similar projects and will testify to the successful completion of these projects. Include name, address, telephone number, and specific type of application.

5.0 MEASUREMENT AND PAYMENT

This work will not be measured for payment, but shall be included in the per square foot or linear foot bid price for the pertinent walls as shown on plans. Payment will include the furnishing and use of all form liners, coloring stains, the construction, finishing, and removal of all sample panels, and all equipment, materials, labor, and incidentals necessary to complete the work in conformance with the Contract Documents.

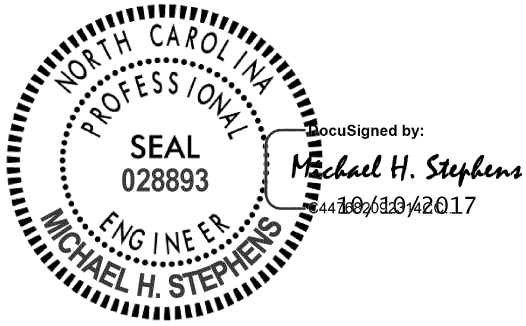

MECHANICALLY STABILIZED EARTH RETAINING WALLS (SPECIAL)

1.0 GENERAL

Construct mechanically stabilized earth (MSE) retaining walls consisting of steel or geosynthetic reinforcement in the reinforced zone connected to vertical facing elements or end bent caps. Use precast concrete panels for vertical facing elements and coarse aggregate in the reinforced zone unless noted otherwise in the plans. Provide reinforced concrete coping and pile sleeves as required. Design and construct MSE retaining walls based on actual elevations and wall dimensions in accordance with the contract and accepted submittals. Use a prequalified MSE Wall Installer to construct MSE retaining walls.

Define MSE wall terms as follows:
Geosynthetic or *Geogrid Reinforcement* – Polyester Type (PET), HDPE or Polypropylene (PP) geogrid reinforcement,
Geogrid – PET, HDPE or PP geogrid,
Reinforcement – Steel or geogrid reinforcement,
Aggregate – Coarse or fine aggregate,
Panel – Precast concrete panel,
Coping – Precast or cast-in-place concrete coping,
MSE Wall – Mechanically stabilized earth retaining wall,
MSE Wall Vendor – Vendor supplying the chosen MSE wall system,
MSE Panel Wall – MSE wall with panels,
MSE Segmental Wall – MSE wall with segmental retaining wall (SRW) units and
Abutment Wall – MSE wall with bridge foundations in any portion of the reinforced zone or an MSE wall connected to an abutment wall (Even if bridge foundations only penetrate a small part of the reinforced zone, the entire MSE wall is considered an abutment wall).

Use an approved MSE wall system in accordance with the plans and any NCDOT restrictions or exceptions for the chosen system. Value engineering proposals for other MSE wall systems will not be considered. Do not use MSE wall systems with an "approved for provisional use" status for abutment walls or MSE walls subject to scour, walls with design heights greater than 35 ft or walls supporting or adjacent to railroads or interstate highways. The list of approved MSE wall systems with approval status is available from:
connect.ncdot.gov/resources/Geological/Pages/Products.aspx

2.0 MATERIALS

Refer to the *Standard Specifications*.

Item	Section
Aggregate	1014
Corrugated Steel Pipe	1032-3
Epoxy, Type 3A	1081
Geotextiles, Type 2	1056
Grout, Type 3	1003

Joint Materials	1028
Portland Cement Concrete, Class A	1000
Precast Retaining Wall Coping	1077
Reinforcing Steel	1070
Retaining Wall Panels	1077
Segmental Retaining Wall Units	1040-4
Select Material, Class V	1016
Shoulder Drain Materials	816-2
Steel Pipe	1036-4(A)

Use galvanized corrugated steel pipe with a zinc coating weight of 2 oz/sf (G200) for pile sleeves. Provide Type 2 geotextile for filtration and separation geotextiles. Use Class A concrete for cast-in-place coping, leveling concrete and pads. Use galvanized steel pipe, threaded rods and nuts for the PET geogrid reinforcement vertical obstruction detail. Provide galvanized Grade 36 anchor rods and Grade A hex nuts that meet AASHTO M 314 for threaded rods and nuts.

Use panels and SRW units from producers approved by the Department and licensed by the MSE Wall Vendor. Provide steel strip connectors embedded in panels fabricated from structural steel that meets the requirements for steel strip reinforcement. Unless required otherwise in the contract, produce panels with a smooth flat final finish that meets Article 1077-11 of the *Standard Specifications*. Accurately locate and secure reinforcement connectors in panels and maintain required concrete cover. Produce panels within 1/4" of the panel dimensions shown in the accepted submittals.

Damaged panels or SRW units with excessive discoloration, chips or cracks as determined by the Engineer will be rejected. Do not damage reinforcement connection devices or mechanisms in handling or storing panels and SRW units.

Store steel materials on blocking at least 12" above the ground and protect it at all times from damage; and when placing in the work make sure it is free from dirt, dust, loose mill scale, loose rust, paint, oil or other foreign materials. Handle and store geotextiles and geogrids in accordance with Article 1056-2 of the *Standard Specifications*. Load, transport, unload and store MSE wall materials so materials are kept clean and free of damage. Bent, damaged or defective materials will be rejected.

A. Aggregate

Use standard size No. 57, 57M, 67 or 78M that meets Table 1005-1 of the *Standard Specifications* for coarse aggregate except do not use No. 57 or 57M stone in the reinforced zone of MSE walls with geosynthetic reinforcement or connectors. Use the following for fine aggregate:

1. Standard size No. 1S, 2S, 2MS or 4S that meets Table 1005-2 of the *Standard Specifications* or
2. Gradation that meets Class III, Type 3 select material in accordance with Article 1016-3 of the *Standard Specifications*.

Fine aggregate is exempt from mortar strength in Subarticle 1014-1(E) of the *Standard Specifications*. Use fine aggregate with a maximum organic content of 1.0%. Provide aggregate with electrochemical properties that meet the following requirements:

AGGREGATE pH REQUIREMENTS		
Aggregate Type (in reinforced zone)	**Reinforcement or Connector Material**	**pH**
Coarse or Fine	Steel	5 – 10
Coarse or Fine	PET	5 – 8
Coarse or Fine	Polyolefin (HDPE or Polypropylene)	4.5 – 9

AGGREGATE CHEMICAL REQUIREMENTS (Steel Reinforcement/Connector Materials Only)			
Aggregate Type (in reinforced zone)	**Resistivity**	**Chlorides**	**Sulfates**
Coarse	≥ 5,000 Ω · cm	≤ 100 ppm	≤ 200 ppm
Fine	≥ 3,000 Ω · cm		

Use aggregate from sources participating in the Department's Aggregate QC/QA Program as described in Section 1006 of the *Standard Specifications*. Sample and test aggregate in accordance with the *Mechanically Stabilized Earth Wall Aggregate Sampling and Testing Procedures*. Electrochemical testing is only required for coarse aggregate from sources in the Coastal Plain as defined by Subarticle 1018-2(B)(1).

B. Reinforcement

Provide steel or geosynthetic reinforcement supplied by the MSE Wall Vendor or a manufacturer approved or licensed by the vendor. Use reinforcement approved for the chosen MSE wall system. The list of approved reinforcement for each MSE wall system is available from the website shown elsewhere in this provision.

1. Steel Reinforcement

Provide Type 1 material certifications in accordance with Article 106-3 of the *Standard Specifications* for steel reinforcement. Use welded wire grid reinforcement ("mesh", "mats" and "ladders") that meet Article 1070-3 of the *Standard Specifications* and steel strip reinforcement ("straps") that meet ASTM A572, A1011 or A463. Use 10 gauge or heavier structural steel Grade 50 or higher for steel strip reinforcement. Galvanize steel reinforcement in accordance with Section 1076 of the *Standard Specifications* or provide aluminized steel strip reinforcement that meet ASTM A463, Type 2-100.

2. Geosynthetic Reinforcement

Geogrids will be identified by the product label attached to the original packaging

or the geogrid itself by the Manufacturer. Allow the Engineer to visually verify geogrid products before installation. Geogrids that are unwrapped, missing original packaging or previously opened may not be used unless approved by the Engineer.

Use HDPE or PP geogrid for geogrid reinforcement connected to backwalls of end bent caps. Use PET or HDPE geogrid for geogrid reinforcement connected to SRW units and only HDPE geogrid for geogrid reinforcement connected to panels.

Define "machine direction" (MD) and "cross-machine direction" (CD) for geogrids in accordance with ASTM D4439. Provide Type 1 material certifications in accordance with Article 1056-3 of the *Standard Specifications*.

Provide extruded geogrids manufactured from punched and drawn polypropylene sheets for PP geogrids that meet the following:

PP GEOGRID REQUIREMENTS		
Property	**Requirement[1]**	**Test Method**
Aperture Dimensions[2]	1" x 1.2"	N/A
Minimum Rib Thickness[2]	0.07" x 0.07"	N/A
Tensile Strength @ 2% Strain[2]	580 lb/ft x 690 lb/ft	ASTM D6637, Method A
Tensile Strength @ 5% Strain[2]	1,200 lb/ft x 1,370 lb/ft	
Ultimate Tensile Strength[2]	1,850 lb/ft x 2,050 lb/ft	
Junction Efficiency[3] (MD)	93%	ASTM D7737
Flexural Rigidity[4]	2,000,000 mg–cm	ASTM D7748
Aperture Stability Modulus[5]	0.55 lb–ft/degrees	ASTM D7864
UV Stability (Retained Strength)	100% (after 500 hr of exposure)	ASTM D4355

1. MARV per Article 1056-3 of the *Standard Specifications* except dimensions and thickness are nominal.
2. Requirement for MD x CD.
3. Junction Efficiency (%) = (Average Junction Strength (Xj_{ave}) / Ultimate Tensile Strength (MD) from ASTM D6637, Method A) × 100.
4. Test specimens two ribs wide, with transverse ribs cut flush with exterior edges of longitudinal ribs, and sufficiently long to enable measurement of the overhang dimension.
5. Applied moment of 17.7 lb–inch (torque increment).

C. Bearing Pads

For MSE panel walls, use bearing pads that meet Section 3.6.1.a of the *FHWA Design and Construction of Mechanically Stabilized Earth Walls and Reinforced Soil Slopes – Volume I* (Publication No. FHWA-NHI-10-024) except durometer hardness for rubber pads may be 60 or 80 ± 5 and density testing for HDPE pads may be in accordance with ASTM D1505 or D792. Provide bearing pads with thicknesses that meet the following:

BEARING PAD THICKNESS	
Facing Area per Panel (A)	**Minimum Pad Thickness After Compression (based on 2 times panel weight above pads)**

$A \leq 30$ sf	1/2"
30 sf $< A \leq 75$ sf	3/4"

D. Miscellaneous Components

Miscellaneous components may include connectors (e.g., anchors, bars, clamps, pins, plates, ties, etc.), fasteners (e.g., bolts, nuts, washers, etc.) and any other MSE wall components not included above. Galvanize steel components in accordance with Section 1076 of the *Standard Specifications*. Provide miscellaneous components approved for the chosen MSE wall system. The list of approved miscellaneous components for each MSE wall system is available from the website shown elsewhere in this provision.

3.0 PRECONSTRUCTION REQUIREMENTS

A. MSE Wall Surveys

The Retaining Wall Plans show a plan view, typical sections, details, notes and an elevation or profile view (wall envelope) for each MSE wall. Before beginning MSE wall design, survey existing ground elevations shown in the plans and other elevations in the vicinity of MSE wall locations as needed. For proposed slopes above or below MSE walls, survey existing ground elevations to at least 10 ft beyond slope stake points. Based on these elevations, finished grades and actual MSE wall dimensions and details, submit revised wall envelopes for acceptance. Use accepted wall envelopes for design.

B. MSE Wall Designs

For MSE wall designs, submit 11 copies of working drawings and 3 copies of design calculations and a PDF copy of each at least 30 days before the preconstruction meeting. Note name and NCDOT ID number of the panel or SRW unit production facility on the working drawings. Do not begin MSE wall construction until a design submittal is accepted.

Use a prequalified MSE Segmental Wall Design Consultant to design MSE segmental walls. Provide MSE segmental wall designs sealed by a Design Engineer approved as a Geotechnical Engineer (key person) for the MSE Segmental Wall Design Consultant. Provide MSE panel wall designs sealed by a Design Engineer licensed in the state of North Carolina and employed or contracted by the MSE Wall Vendor.

Design MSE walls in accordance with the plans, *AASHTO LRFD Bridge Design Specifications* and any NCDOT restrictions for the chosen MSE wall system unless otherwise required. Design MSE walls for seismic if walls are located in seismic zone 2 based on Figure 2-1 of the *Structure Design Manual*. Connect reinforcement to panels or SRW units with methods or devices approved for the chosen system. Use a uniform reinforcement length throughout the wall height of at least 0.7H with H as shown in the plans or 6 ft, whichever is longer, unless noted otherwise in the plans.

Extend the reinforced zone at least 6" beyond end of reinforcement. Do not locate drains, the reinforced zone or leveling pads outside right-of-way or easement limits.

Use the simplified method for determining maximum reinforcement loads and design parameters approved for the chosen MSE wall system or default values in accordance with the AASHTO LRFD specifications. Design steel components including reinforcement and connectors for the design life noted in the plans and aggregate type in the reinforced zone. If an MSE wall system with geogrid reinforcement includes any steel parts for obstructions, bin walls, connections or other components, design steel exposed to aggregate for the design life noted in the plans and aggregate type in the reinforced zone. Use "Loss of galvanizing" metal loss rates for nonaggressive backfill in accordance with the AASHTO LRFD specifications for galvanized and aluminized steel and metal loss rates for carbon steel in accordance with the following:

CARBON STEEL CORROSION RATES	
Aggregate Type (in reinforced zone)	**Carbon Steel Loss Rate (after coating depletion)**
Coarse	0.47 mil/year
Fine (except abutment walls)	0.58 mil/year
Fine (abutment walls)	0.70 mil/year

For PET or HDPE geogrid reinforcement and geosynthetic connectors, use approved geosynthetic properties for the design life noted in the plans and aggregate type in the reinforced zone. For PP geogrid reinforcement connected to end bent caps, use the following design parameters for the aggregate type in the reinforced zone.

PP GEOGRID REINFORCEMENT DESIGN PARAMETERS				
Aggregate Type (in reinforced zone)	**T_{al} (MD)**	**F***	**α**	**ρ**
Coarse	400 lb/ft	0.70	0.8	32.0°
Fine	428 lb/ft	0.54	0.8	28.35°

Where,

T_{al} = long-term design strength (LTDS),
F* = pullout resistance factor,
α = scale effect correction factor and
ρ = soil-geogrid friction angle.

When noted in the plans, design MSE walls for a live load (traffic) surcharge of 250 lb/sf in accordance with Figure C11.5.6-3(b) of the AASHTO LRFD specifications. For steel beam guardrail with 8 ft posts or concrete barrier rail above MSE walls, analyze top 2 reinforcement layers for traffic impact loads in accordance with Section 7.2 of the FHWA MSE wall manual shown elsewhere in this provision except use the following for geosynthetic reinforcement rupture:

$$\phi\, T_{al}\, R_c \geq T_{max} + (T_I / RF_{CR})$$

Where,

ϕ = resistance factor for tensile resistance in accordance with Section 7.2.1 of the FHWA MSE wall manual,

T_{al} = long-term geosynthetic design strength approved for chosen MSE wall system,

R_c = reinforcement coverage ratio = 1 for continuous geosynthetic reinforcement,

T_{max} = factored static load in accordance with Section 7.2 of the FHWA MSE wall manual,

T_I = factored impact load in accordance with Section 7.2 of the FHWA MSE wall manual and

RF_{CR} = creep reduction factor approved for chosen MSE wall system.

When shown in the plans for abutment walls, use pile sleeves to segregate piles from aggregate in the reinforced zone. If existing or future obstructions such as foundations, guardrail, fence or handrail posts, moment slabs, pavements, pipes, inlets or utilities will interfere with reinforcement, maintain a clearance of at least 3" between obstructions and reinforcement unless otherwise approved. Design reinforcement for obstructions and locate reinforcement layers so all of reinforcement length is within 3" of corresponding connection elevations. Modify PET geogrid reinforcement for obstructions as shown in the plans.

Use 6" thick cast-in-place unreinforced concrete leveling pads beneath panels and SRW units that are continuous at steps and extend at least 6" in front of and behind bottom row of panels or SRW units. Unless required otherwise in the plans, embed top of leveling pads in accordance with the following requirements:

EMBEDMENT REQUIREMENTS		
Front Slope[1] (H:V)	**Minimum Embedment Depth[2] (whichever is greater)**	
6:1 or flatter (except abutment walls)	H/20	1 ft for H ≤ 10 ft 2 ft for H > 10 ft
6:1 or flatter (abutment walls)	H/10	2 ft
> 6:1 to < 3:1	H/10	2 ft
3:1 to 2:1	H/7	2 ft

1. Front slope is as shown in the plans.
2. Define "H" as the maximum design height plus embedment per wall with the design height and embedment as shown in the plans.

When noted in the plans, locate a continuous aggregate shoulder drain along the base of the reinforced zone behind the aggregate. Provide wall drainage systems consisting of drains and outlet components in accordance with Standard Drawing No. 816.02 of the *Roadway Standard Drawings*.

For MSE panel walls, cover joints at back of panels with filtration geotextiles at least 12" wide. If the approval of the chosen MSE wall system does not require a minimum number of bearing pads, provide the number of pads in accordance with the following:

NUMBER OF BEARING PADS		
Facing Area per Panel (A)	**Maximum Wall Height Above Horizontal Panel Joint**	**Minimum Number of Pads per Horizontal Panel Joint**
A ≤ 30 sf	25 ft	2
	35 ft[1]	3
30 sf < A ≤ 75 sf	25 ft	3
	35 ft[1]	4

1. Additional bearing pads per horizontal panel joint may be required for wall heights above joints greater than 35 ft.

For MSE segmental walls, coarse aggregate is required in any SRW unit core spaces and between and behind SRW units for a horizontal distance of at least 18". Separation geotextiles are required between the aggregate and overlying fill or pavement sections except when concrete pavement, full depth asphalt or cement treated base is placed directly on aggregate. When noted in the plans, separation geotextiles are also required at the back of the reinforced zone between the aggregate and backfill or natural ground. Unless required otherwise in the plans, use reinforced concrete coping at top of walls that meets the following requirements:

1. Coping dimensions as shown in the plans,
2. At the Contractor's option, coping that is precast or cast-in-place concrete for MSE panel walls unless cast-in-place coping is required as shown in the plans,
3. Cast-in-place concrete coping for MSE segmental walls and
4. At the Contractor's option and when shown in the plans, cast-in-place concrete coping that extends down back of panels or SRW units or connects to panels or SRW units with dowels.

For MSE segmental walls with dowels, attach dowels to top courses of SRW units in accordance with the following:

1. Set dowels in core spaces of SRW units filled with grout instead of coarse aggregate or
2. Embed adhesively anchored dowels in holes of solid SRW units with epoxy.

For MSE panel walls with coping, connect cast-in-place concrete coping or leveling concrete for precast concrete coping to top row of panels with dowels cast into panels. When concrete barrier rail is required above MSE walls, use concrete barrier rail with moment slab as shown in the plans.

Submit working drawings and design calculations for acceptance in accordance with Article 105-2 of the *Standard Specifications*. Submit working drawings showing plan views, wall profiles with foundation pressures, typical sections with reinforcement and connection details, aggregate locations and types, geotextile locations and details of

leveling pads, panels or SRW units, coping, bin walls, slip joints, pile sleeves, etc. If necessary, include details on working drawings for concrete barrier rail with moment slab, reinforcement splices if allowed for the chosen MSE wall system, reinforcement connected to end bent caps, curved MSE walls with tight (short) radii and obstructions extending through walls or interfering with reinforcement, leveling pads, barriers or moment slabs. Submit design calculations for each wall section with different surcharge loads, geometry or material parameters. At least one analysis is required for each wall section with different reinforcement lengths. When designing MSE walls with computer software other than MSEW, use MSEW, version 3.0 with update 14.96 or later, manufactured by ADAMA Engineering, Inc. to verify the design. At least one MSEW analysis is required per 100 ft of wall length with at least one analysis for the wall section with the longest reinforcement. Submit electronic MSEW input files and PDF output files with design calculations.

C. Preconstruction Meeting

Before starting MSE wall construction, hold a preconstruction meeting to discuss the construction and inspection of the MSE walls. If this meeting occurs before all MSE wall submittals have been accepted, additional preconstruction meetings may be required before beginning construction of MSE walls without accepted submittals. The Resident or Bridge Maintenance Engineer, Bridge Construction Engineer, Geotechnical Operations Engineer, Contractor and MSE Wall Installer Superintendent will attend preconstruction meetings.

4.0 CORROSION MONITORING

Corrosion monitoring is required for MSE walls with steel reinforcement. The Engineer will determine the number of monitoring locations and where to install the instrumentation. Contact M&T before beginning wall construction. M&T will provide the corrosion monitoring instrumentation kits and if necessary, assistance with installation.

5.0 SITE ASSISTANCE

Unless otherwise approved, an MSE Wall Vendor representative is required to assist and guide the MSE Wall Installer on-site for at least 8 hours when the first panels or SRW units and reinforcement layer are placed. If problems are encountered during construction, the Engineer may require the vendor representative to return to the site for a time period determined by the Engineer.

6.0 CONSTRUCTION METHODS

Control drainage during construction in the vicinity of MSE walls. Direct run off away from MSE walls, aggregate and backfill. Contain and maintain aggregate and backfill and protect material from erosion.

Excavate as necessary for MSE walls in accordance with the accepted submittals. If applicable and at the Contractor's option, use temporary shoring for wall construction instead of temporary slopes to construct MSE walls. Define "temporary shoring for wall

construction" as temporary shoring not shown in the plans or required by the Engineer including shoring for OSHA reasons or the Contractor's convenience.

Unless required otherwise in the plans, install foundations and if required, pile sleeves located in the reinforced zone before placing aggregate or reinforcement. Brace piles in the reinforced zone to maintain alignment when placing and compacting aggregate. Secure piles together with steel members near top of piles. Clamp members to piles instead of welding if bracing is at or below pile cut-off elevations.

Notify the Engineer when foundation excavation is complete. Do not place leveling pad concrete, aggregate or reinforcement until excavation dimensions and foundation material are approved.

Construct cast-in-place concrete leveling pads at elevations and with dimensions shown in the accepted submittals and in accordance with Section 420 of the *Standard Specifications*. Cure leveling pads at least 24 hours before placing panels or SRW units.

Erect and support panels and stack SRW units so the final wall position is as shown in the accepted submittals. Stagger SRW units to create a running bond by centering SRW units over joints in the row below as shown in the accepted submittals. Space bearing pads in horizontal panel joints as shown in the accepted submittals and cover all panel joints with filtration geotextiles as shown in the accepted submittals. Attach filtration geotextiles to back of panels with adhesives, tapes or other approved methods.

Construct MSE walls with the following tolerances:

A. SRW units are level from front to back and between units when checked with a 4 ft long level,

B. Vertical joint widths are 1/4" maximum for SRW units and 3/4", ±1/4" for panels,

C. Final wall face is within 3/4" of horizontal and vertical alignment shown in the accepted submittals when measured along a 10 ft straightedge and

D. Final wall plumbness (batter) is not negative (wall face leaning forward) and within 0.5° of vertical unless otherwise approved.

Place reinforcement at locations and elevations shown in the accepted submittals and within 3" of corresponding connection elevations. Install reinforcement with the direction shown in the accepted submittals. Pull geogrid reinforcement taut so that it is in tension and free of kinks, folds, wrinkles or creases. Reinforcement may be spliced once per reinforcement length if shown in the accepted submittals. Use reinforcement pieces at least 6 ft long. Contact the Engineer when unanticipated existing or future obstructions such as foundations, guardrail, fence or handrail posts, pavements, pipes, inlets or utilities will interfere with reinforcement. To avoid obstructions, deflect, skew or modify reinforcement as shown in the accepted submittals.

Place aggregate in the reinforced zone in 8" to 10" thick lifts. Compact fine aggregate in accordance with Subarticle 235-3(C) of the *Standard Specifications*. Use only hand operated compaction equipment to compact aggregate within 3 ft of panels or SRW units.

At a distance greater than 3 ft, compact aggregate with at least 4 passes of an 8 ton to 10 ton vibratory roller in a direction parallel to the wall face. Smooth wheeled or rubber tired rollers are also acceptable for compacting aggregate. Do not use sheepsfoot, grid rollers or other types of compaction equipment with feet. Do not displace or damage reinforcement when placing and compacting aggregate. End dumping directly on geogrids is not permitted. Do not operate heavy equipment on reinforcement until it is covered with at least 8" of aggregate. Replace any damaged reinforcement to the satisfaction of the Engineer.

Backfill for MSE walls will consist of the aggregate, fine or coarse, as used in the reinforced zone of the MSE walls. If a drain is required, install wall drainage systems as shown in the accepted submittals and in accordance with Section 816 of the *Standard Specifications*. If pile sleeves are required, fill sleeves with loose uncompacted sand before constructing end bent caps.

Install dowels as necessary for SRW units and place and construct coping and leveling concrete as shown in the accepted submittals. Construct leveling concrete in accordance with Section 420 of the *Standard Specifications*. Construct cast-in-place concrete coping in accordance with Subarticle 452-3(C) of the *Standard Specifications*. When single faced precast concrete barrier is required in front of and against MSE walls, stop coping just above barrier so coping does not interfere with placing barrier up against wall faces. If the gap between a single faced barrier and wall face is wider than 2", fill gap with Class V select material (standard size No. 78M stone). Otherwise, fill gap with backer rod and seal joint between barrier and MSE wall with silicone sealant.

Install reinforcement connected to end bent caps in accordance with the accepted submittals and embed geogrid reinforcement in end bent caps as shown in the plans. After cutting geogrid reinforcement to required lengths, reroll and rewrap portions of geogrids not embedded in caps to protect geogrids from damage. When separation geotextiles are required, overlap adjacent geotextiles at least 18" and hold separation geotextiles in place with wire staples or anchor pins as needed. Seal joints above and behind MSE walls between coping and concrete slope protection with silicone sealant.

7.0 MEASUREMENT AND PAYMENT

MSE Retaining Wall Nos. 1, 2, 3, and 4 will be measured and paid in square feet. MSE walls will be measured as the square feet of wall face area with the pay height equal to the difference between top of wall and top of leveling pad elevations. Define “top of wall” as top of coping or top of panels or SRW units for MSE walls without coping.

The contract unit price for *MSE Retaining Wall Nos. 1, 2, 3, and 4* will be full compensation for providing designs, submittals, labor, tools, equipment and MSE wall materials, aggregate backfill material between MSE wall reinforcement zones, excavating, backfilling, hauling and removing excavated materials and supplying site assistance, leveling pads, panels, SRW units, reinforcement, aggregate, wall drainage systems, geotextiles, bearing pads, coping, miscellaneous components and any incidentals necessary to construct MSE walls. The contract unit price for *MSE Retaining Wall Nos. 1, 2, 3, and 4*

will also be full compensation for reinforcement connected to and aggregate behind end bent caps in the reinforced zone, wall modifications for obstructions, pile sleeves filled with sand, joints sealed with silicone sealant and gaps between barriers and MSE walls filled with backer rod or No. 78M stone, if required.

No separate payment will be made for temporary shoring for wall construction. Temporary shoring for wall construction will be incidental to the contract unit price for *MSE Retaining Wall Nos. 1, 2, 3, and 4*.

The contract unit price for *MSE Retaining Wall Nos. 1, 2, 3, and 4* does not include the cost for ditches, fences, handrails, barrier or guardrail associated with MSE walls as these items will be paid for elsewhere in the contract.

Payment will be made under:

Pay Item	**Pay Unit**
MSE Retaining Wall No. ___.	Square Foot

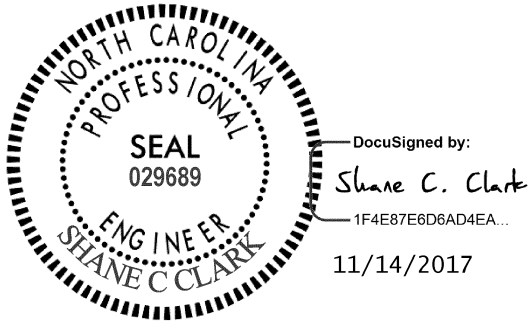

OVERHEAD AND DYNAMIC MESSAGE SIGN FOUNDATIONS

Description

Sign foundations include foundations for overhead and dynamic message signs (DMS) supported by metal poles or upright trusses. Sign foundations consist of footings with pedestals or drilled piers with or without grade beams or wings, conduit and anchor rod assemblies. Construct sign foundations in accordance with the contract and accepted submittals. Define "cantilever sign" as an overhead cantilever sign support in accordance with Figure 1-1 of the *AASHTO Standard Specifications for Structural Supports for Highway Signs, Luminaires and Traffic Signals*.

Materials

Use sign foundation materials that meet the *Foundations and Anchor Rod Assemblies for Metal Poles* provision.

Assumed Subsurface Conditions

Assume the following soil parameters and groundwater elevation for sign foundations unless these subsurface conditions are not applicable to sign locations:

(A) Unit weight (γ) = 120 lb/cf,

(B) Friction angle (ϕ) = 30°,

(C) Cohesion (c) = 0 lb/sf and

(D) Groundwater 7 ft below finished grade.

A subsurface investigation is required if the Engineer determines these assumed subsurface conditions do not apply to a sign location and the sign cannot be moved. Subsurface conditions requiring a subsurface investigation include but are not limited to weathered or hard rock, boulders, very soft or loose soil, muck or shallow groundwater. No extension of completion date or time will be allowed for subsurface investigations.

Subsurface Investigations

Use a prequalified geotechnical consultant to perform one standard penetration test (SPT) boring in accordance with ASTM D1586 at each sign location requiring a subsurface investigation. Rough grade sign locations to within 2 ft of finished grade before beginning drilling. Drill borings to 2 drilled pier diameters below anticipated pier tip elevations or refusal, whichever is higher.

Use the computer software gINT version V8i or later manufactured by Bentley Systems, Inc. with the current NCDOT gINT library and data template to produce SPT boring logs. Provide boring logs sealed by a geologist or engineer licensed in the state of North Carolina.

Sign Foundation Designs

Design sign foundations for the wind zone and clearances shown in the plans and the slope of finished grade at each sign location. Use the assumed soil parameters and groundwater elevation above for sign foundation designs unless a subsurface investigation is required. For sign locations requiring a subsurface investigation, design sign foundations for the subsurface conditions at each sign location. Design footings, pedestals, drilled piers, grade beams and wings in accordance with the 6th Edition of the *AASHTO Standard Specifications for Structural Supports for Highway Signs, Luminaires and Traffic Signals*. In some instances, conflicts with drainage structures may dictate sign foundation types.

Design footings in accordance with Section 4.4 of the *AASHTO Standard Specifications for Highway Bridges*. Do not use an allowable bearing pressure of more than 3,000 lb/sf for footings.

Design drilled piers for side resistance only in accordance with Section 4.6 of the *AASHTO Standard Specifications for Highway Bridges* except reduce ultimate side resistance by 25% for uplift. Use the computer software LPILE version 6.0 or later manufactured by Ensoft, Inc. to analyze drilled piers. Provide drilled pier designs with a horizontal deflection of less than 1" at top of piers. For cantilever signs with single drilled pier foundations supporting metal poles, use wings to resist torsion forces. Provide drilled pier designs with a factor of safety of at least 2.0 for torsion.

For drilled pier sign foundations supporting upright trusses, use dual drilled piers connected with a grade beam having a moment of inertia approximately equal to that of either pier. The Broms' method is acceptable to analyze drilled piers with grade beams instead of LPILE. Use a safety factor of at least 3.5 for the Broms' design method in accordance with C13.6.1.1 of the *AASHTO Standard Specifications for Structural Supports for Highway Signs, Luminaires and Traffic Signals*.

Submit boring logs, if any, working drawings and design calculations for acceptance in accordance with Article 105-2 of the *2012 Standard Specifications*. Submit working drawings showing plan views, required foundation dimensions and elevations and typical sections with reinforcement, conduit and anchor rod assembly details. Include all boring logs, design calculations and LPILE output for sign foundation design submittals. Have sign foundations designed, detailed and sealed by an engineer licensed in the state of North Carolina.

Construction Methods

Construct footings, pedestals, drilled piers, grade beams and wings and install anchor rod assemblies for sign foundations in accordance with the *Foundations and Anchor Rod Assemblies for Metal Poles* provision.

Measurement and Payment

Overhead Footings will be measured and paid in cubic yards. Sign foundations will be measured as the cubic yards of foundation concrete for footings, pedestals, drilled piers, grade beams and wings shown on the accepted submittals. The contract unit price for *Overhead Footings* will be full compensation for providing labor, tools, equipment and foundation materials, stabilizing or shoring excavations and supplying concrete, reinforcing steel, conduit, anchor rod assemblies and any incidentals necessary to construct sign foundations. Subsurface investigations required by the Engineer will be paid as extra work in accordance with Article 104-7 of the *2012 Standard Specifications*.

Payment will be made under:

Pay Item	**Pay Unit**
Overhead Footings	Cubic Yard



DocuSigned by:
Scott A. Hidden
F760CAEB96FC4D3...

8/8/2017



DocuSigned by:
Renee B. Roach
B3C6C6F7CF4640D...

9/6/2017

OVERHEAD SIGN SUPPORTS

DESCRIPTION

Design, fabricate, furnish and erect various types of overhead sign assemblies. Fabricate supporting structures using tubular members of either aluminum or steel. The types of overhead sign assemblies included in this specification are span structures, cantilever structures and sign structures attached to bridges.

Materials

Refer to Division 10

Item	Section
Structural Steel	1072
Overhead Sign Structures	1096
Signing Materials	1092
Organic Zinc Repair Paint	1080-9
Reinforcing Steel	1070
Direct Tension Indicators	440 and 1072

Construction Methods

A. General

Fabricate overhead sign assemblies in accordance with the details shown in the approved working drawings and the requirements of these specifications.

No welding, cutting or drilling will be permitted in the field, unless approved by the Engineer.

Drill bolt holes and slots to finished size. Holes may also be punched to finish size, provided the diameter of the punched holes is at least twice the thickness of the metal being punched. Flame cutting of bolt holes and slots is not permitted.

Erect sign panels in accordance with the requirement for Type A or B signs as indicated in the plans or Roadway Standard Drawings. Field drill two holes per connection in the Z bars for attaching signs to overhead structures. Provide two U-bolts at each U-bolt connection such as each truss chord to sign hanger and each truss chord to walkway support or light support.

Provide two U-bolts at each U-bolt connection where ends of truss chords are supported. The minimum diameter of all U-bolts is ½ inch.

For all U-bolt connections of hanger beams to overhead assembly truss chords, provide all U-bolts with a flat washer and double nuts at each end of the U-bolts. All double nuts that are on any U-bolt shall be the same thickness and weight. When assembled, the double nuts shall be brought tight against each other by the use of two wrenches.

Use two coats of a zinc-rich paint to touch up minor scars on all galvanized materials

For high strength bolted connections, use direct tension indicators. Galvanize bolts, nuts and washers in accordance with the Standard Specifications.

B. Shop Drawings

Design the overhead sign supports, including foundations, prior to fabrication. Submit design calculations and working drawings of the designs to the Engineer for review and acceptance.

Have a professional engineer registered in the State of North Carolina perform the computations and render a set of sealed, signed and dated drawings detailing the construction of each structure.

Submit to the Engineer for review and acceptance complete design and fabrication details for each overhead sign assembly, including foundations and brackets for supporting the signs and maintenance walkways, if applicable, electrical control boxes, and lighting luminaires. Base design upon the revised structure line drawings, wind load area and the winds speed shown in the plans, and in accordance with the AASHTO *Standard Specifications for Structural Structures for Highway Signs, Luminaires and Traffic Signals, 6th Edition, 2013 and 2015 Interim Revisions*.

Submit electronic (.pdf) copies of completely detailed working drawings and the design calculations including all design assumptions for each overhead sign assembly to the Engineer for approval prior to fabrication. Working drawings shall include complete design and fabrication details (including foundations), provisions for attaching signs, maintenance walkways (when applicable), lighting luminaires to supporting structures, applicable material specifications, and any other information necessary for procuring and replacing any part of the complete overhead sign assembly.

Allow 40 days for initial working drawing review after the Engineer receives them. If revisions to working drawings are required, an additional 40 days shall be required for review and approval of the final working drawings.

Approval of working drawings by the Engineer shall not relieve the Contractor of responsibility for the correctness of the drawings, or for the fit of all shop and field connections and anchors.

C. Design and Fabrication

The following criteria govern the design of overhead sign assemblies:

Design shall be in accordance with the AASHTO *Standard Specifications for Structural Structures for Highway Signs, Luminaires and Traffic Signals, 6th Edition, 2013 and 2015 Interim Revisions.*

Within this Specification, there are several design criteria that are owner specified. They include:

- Overhead cantilever sign structures shall include galloping loads (exclude four-chord horizontal trusses)

- The Yearly Mean Wind Velocity, V_{mean}, in North Carolina shall be assumed to be 11.6 mph.
- The Fatigue Importance Category used in the design, for each type of structure, shall be for:

    - Cantilevered structures with span greater than 50 feet – Fatigue Importance Category I.
    - Cantilevered structures with span less than or equal to 50 feet – Fatigue Importance Category II.
    - Non-Cantilevered structures – Fatigue Importance Category II.

The following Specification interpretations or criteria shall be used in the design of overhead sign assemblies:

- For design of supporting upright posts or columns, the effective length factor for columns "K", as provided for in Appendix B, Section B.5, shall be taken as the following, unless otherwise approved by the Engineer:

    Case 1 For a single upright post of cantilever or span type overhead sign structure, the effective column length factor, "K", shall be taken as 2.0.

    Case 2 For twin post truss-type upright post with the post connected to one chord of a horizontal truss, the effective column length factor for that column shall be taken as 2.0.

    Case 3 For twin post truss-type upright post with the post connected to two truss chords of a horizontal tri-chord or box truss, the effective column length factor for that column shall be taken as 1.65.

- For twin post truss-type uprights, the unbraced length of the post shall be from the chord to post connection to the top of base plate.

- For twin post truss-type uprights, when the post is subject to axial compression, bending moment, shear, and torsion, the post shall satisfy the AASHTO *Standard Specifications for Structural Structures for Highway Signs, Luminaires and Traffic Signals, 6th Edition, 2013 and 2015 Interim Revisions* Equations 5.12.2.1-1, 5.12.2.1-2 and 5.12.2.1-5. To reduce the effects of secondary bending, in lieu of Equation 5.12.2.1-2, the following equation may be used:

$$\frac{f_a}{F_a} + \frac{f_b}{\left(1 - \frac{0.6 f_a}{F_{é}}\right) F_b} + \left(\frac{f_v}{F_v}\right)^2 \leq 1.0$$

  Where f_a = Computed axial compression stress at base of post

- The base plate thickness for all uprights and poles shall be a minimum of 2" but not less than that determined by the following criteria and design.

  Case 1 Circular or rectangular solid base plates with the upright pole welded to the top surface of the base plate with full penetration butt weld, and where no stiffeners are provided. A base plate with a small center hole, which is less than 1/5 of the upright diameter, and located concentrically with the upright pole, may be considered as a solid base plate.

  The magnitude of bending moment in the base plate, induced by the anchoring force of each anchor bolt shall be calculated as $M = (P \times D_1)/2$.

  Case 2 Circular or rectangular base plate with the upright pole socketed into and attached to the base plate with two lines of fillet weld, and where no stiffeners are provided, or any base plate with a center hole that is larger in diameter than 1/5 of the upright diameter. The magnitude of bending moment induced by the anchoring force of each anchor bolt shall be calculated as $M = P \times D_2$.

  Where:

  M = bending moment at the critical section of the base plate induced by one anchor bolt

  P = anchoring force of each bolt

  D_1 = horizontal distance between the center of the anchor bolt and the outer face of the upright, or the difference between the radius of the bolt circle and the radius of the upright

  D_2 = horizontal distance between the face of the upright and the face of the anchor bolt nut

- The critical section shall be located at the face of the anchor bolt and perpendicular to the radius of the bolt circle. The overlapped part of two adjacent critical sections shall be considered ineffective.

- The thickness of Case 1 base plate shall not be less than the calculated based on formula for Case 2.

- Uprights, foundations, and trusses that support overhead signs shall be designed in accordance with the Overhead and Dynamic Message Sign Foundations Project Special Provision for the effects of torsion. Torsion shall be considered from dead load eccentricity of these attachments, as well as for the attachments such as supporting brackets, lights, etc., that add to the torsion in the assembly. Truss vertical and horizontal truss diagonals in particular and any other assembly members shall be appropriately sized for these loads

- Uprights, foundations, and trusses that support overhead mounted signs shall be designed for the proposed sign wind area as noted in the contract drawings. Truss vertical and horizontal truss diagonals in particular and any other assembly members shall be appropriately sized for these loads.

For non-cantilevered monotube sign support structures, the following table and figures are considered as a required addition to the AASHTO *Standard Specifications for Structural Structures for Highway Signs, Luminaires and Traffic Signals, 6th Edition, 2013 and 2015 Interim Revisions:*

Construction	Detail	Stress Category	Application	Example
Mechanically Fastened Connections	25. Bolts in tension	D	Beam column connection for monotube structures	16
Fillet-Welded Connections	26. Fillet weld with one side normal to the applied stress	E'	Beam column connection for monotube structures	16
Mechanically Fastened Connections	27. High-Strength bolts in tension	D	Monotube or truss-chord splice	17
Fillet-Welded Connections	28. Fillet weld with one side normal to the applied stress	E'	Monotube or truss-chord splice	17
Mechanically Fastened Connections	29. U-bolts tied to the transverse truss column to keep the chords in place	D	Horizonal truss connection with the vertical truss	18
Mechanically Fastened Connections	30. Net section of full-tightened, high-tension bolts in shear	B	Truss-bolted joint	18

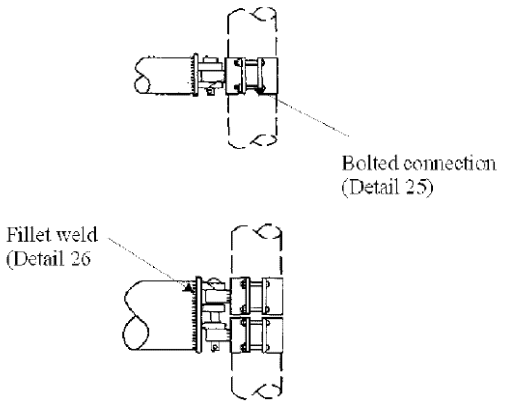

Beam-Column Connection for monotube structure
Example 16

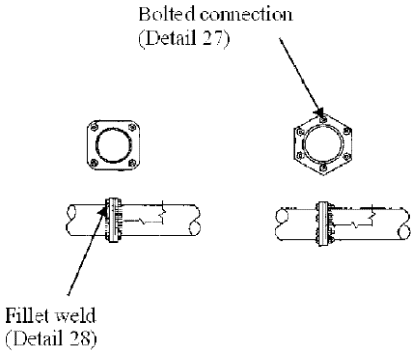

Monotube beam splice
Example 17

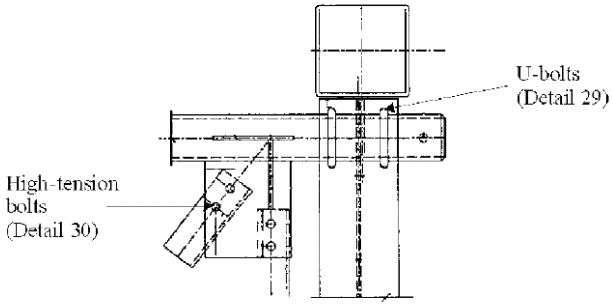

Beam-Column Connection for Truss Structure
Example 18

* From NCHRP Report 494 dated 2003

Fabricate all overhead sign assemblies, including but not limited to foundations, in accordance with the details shown on the approved shop drawings and with the requirements of these Specifications.

Fabricate the span and cantilever supporting structures using tubular members of either aluminum or steel, using only one type of material throughout the project. Sign support structures that are to be attached to bridges shall be fabricated using other structural shapes.

Horizontal components of the supporting structures for overhead signs may be of a truss design or a design using singular (monotube) horizontal members to support the sign panels.

Truss or singular member centerline must coincide with the centerline of sign design area shown on the structure line drawing.

Provide permanent camber in addition to dead load camber in accordance with the AASHTO *Standard Specifications for Structural Structures for Highway Signs, Luminaires and Traffic Signals, 6th Edition, 2013 and 2015 Interim Revisions*. Indicate on the shop drawings the amount

of camber provided and the method employed in the fabrication of the support to obtain the camber.

Use cantilever sign structures that meet the following design criteria:

a. Do not exceed an L/150 vertical dead load deflection at the end of the arm due to distortions in the arm and vertical support, where L is the length of the arm from the center of the vertical support to the outer edge of the sign.

b. Do not exceed an L/40 horizontal deflection at the end of the arm due to distortions in the arm and vertical support, as a result of design wind load.

Fabricate attachment assemblies for mounting signs in a manner that allows easy removal of sign panels for repair.

D. Compensation

The work covered by this section will be paid for at the contract lump sum for each *Supports, Overhead Sign Structure* @ _____. Such price will be full compensation for all work covered by this specification includes all design, fabrication, construction, transportation, and erection of the complete overhead sign structure, supporting structure, hardware, lighting support brackets, preparing and furnishing shop drawings, and attaching the signs to the overhead assembly.

Payment will be made under:

Supports, Overhead Sign Structure @ _____	Lump Sum

TC-1

U-5806 Cabarrus County

WORK ZONE TRAFFIC CONTROL
Project Special Provisions
Table of Contents

Special Provision	**Page**
Law Enforcement	TC-2



DocuSigned by:
Kenneth C. Thornewell Jr., P.E.
1E991EF27373405...

10/23/2017

TC-2

U-5806 Cabarrus County

LAW ENFORCEMENT:
(05/14/2013)

Description

Furnish Law Enforcement Officers and marked Law Enforcement vehicles to direct traffic in accordance with the contract.

Construction Methods

Use uniformed Law Enforcement Officers and marked Law Enforcement vehicles equipped with blue lights mounted on top of the vehicle, and Law Enforcement vehicle emblems to direct or control traffic as required by the plans or by the Engineer.

Measurement and Payment

Law Enforcement will be measured and paid for in the actual number of hours that each Law Enforcement Officer is provided during the life of the project as approved by the Engineer. There will be no direct payment for marked Law Enforcement vehicles as they are considered incidental to the pay item.

Payment will be made under:

Pay Item	Pay Unit
Law Enforcement	Hour

PROJECT SPECIAL PROVISIONS
Utility Construction

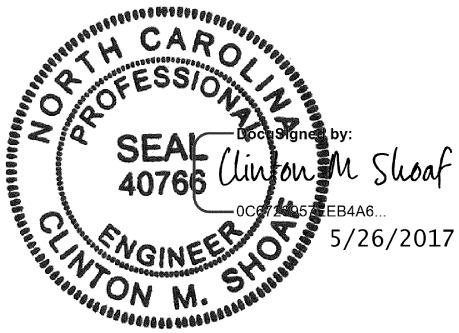

City of Concord
PO Box 308
Concord, NC 28026

Project Engineer: Clinton Shoaf, PE
704-920-5407
shoafc@concordnc.gov

Revise the 2012 Standard Specifications as follows:

Page 10-58, Sub-article 1036-1, General
add the following sentence:

All materials in contact with potable water shall be in conformance with Section 1417 of the Safe Drinking Water Act.

Page 15-1, Sub-article 1500-2, Cooperation with the Utility Owner, paragraph 2
add the following sentences:

Water facilities are owned by the City of Concord. The contact person for the City is Ms. Sue Hyde, PE; she can be reached by phone at (704) 920-5401.

Prior to commencement of any water utility construction activity, contact the City of Concord Construction Manager, Mr. Phillip Kingsland, (704) 920-5425, to schedule and attend a Pre-Construction meeting with the owner's representatives and DOT's representatives. The contractor, the contractor's superintendent, and representatives of subcontractors involved in water utility work shall attend.

Notify the City of Concord Construction Manager at least 24 hours prior to beginning any water or sewer construction activity.

Maintain water and sewer service to existing customers during construction. Minimize the duration of any service disruption. Notify the City of Concord Construction Manager at least 48 hours in advance of any scheduled service disruption. Provide notice on a City approved form to City of Concord customers specifying the day and duration of any scheduled disruption, including appropriate City contact numbers.

Provide temporary potable water supplies to City of Concord customers when the duration of water service disruption exceeds 4 hours. This work is considered incidental to the water line. No additional payment will be made.

Page 15-2, Sub-article 1500-7, Submittals and Records
add the following sentence:

Provide one set of sealed as-built drawings and 3 sets of complete and sealed record drawings to the owner in a 40':1" horizontal and 4':1" vertical scale on 24" by 36" paper and a complete digital copy of the record drawings in PDF and ACAD format on a CD, and the executed Engineer's Certification forms with original signatures, in accordance with the requirements established by the City of Concord Code of Ordinances, Chapter 62-Article 3. The Chapter 62, Article 3 Code of Ordinance can be obtained from the City at:

http://www.ci.concord.nc.us/Government/CityOrdinances/tabid/207/Default.aspx.

Page 15-2, Sub-article 1500-9, Placing Pipelines into Service
add the following sentence:

Obtain approval from the NCDENR-Public Water Supply Section prior to placing a new water line into service. Use backflow prevention assemblies for temporary connections to isolate new water lines from existing water line.

Provide materials for the proposed water and sewer utilities construction meeting the applicable requirements (i.e. material specifications, standard details, testing, policies, etc.) of the Water and Sewer Authority of Cabarrus County (WSACC) Standard Specifications, dated August, 2006, applicable current City of Concord standard details as of Date of Advertisement, and the WSACC Standard Details, dated August, 2006. City of Concord details can be obtained from the City at:

http://www.ci.concord.nc.us/Departments/Engineering/FormsDownloads/tabid/333/Default.aspx.

WSACC Standard Specifications and Details can be obtained from WSACC at:

http://www.wsacc.org/index.asp?Type=B_BASIC&SEC={56903D54-AD5E-4041-B06D-23D5BDC4DED4}.

Measurement and payment for work will be in accordance with the *Standard Specifications*.

Page 15-3, Sub-article 1505-3, Construction Methods:
Replace (c) Bedding with:

Refer to the Water and Sewer Authority of Cabarrus County (WSACC) Standard Specifications, dated August 2006 for bedding requirements.

Page 15-3, Sub-article 1505-3, Construction Methods
Replace (C) Bedding with:

Refer to the Water and Sewer Authority of Cabarrus County (WSACC) Standard Specifications, dated August 2006 for bedding requirements.

Page 15-5, Sub-article 1510-2, Materials
Replace line 19 with the following:

Refer to the Water and Sewer Authority of Carrus County (WSACC) Standard Specifications, dated August 2006.

Page 15-6, Sub-article 1510-3 (B), Testing and Sterilization
change the allowable leakage formula to:

$$W = LD\sqrt{P} \div 148,000$$

Page 15-6, Sub-article 1510-3 (B), Testing and Sterilization, sixth paragraph:
Replace the paragraph with the following:

Sterilize water lines in accordance with Section 1003 of The Rules Governing Public Water supply and AWWA C651 Section 4.4.3, the Continuous Feed Method. Provide a chlorine solution with between 50 parts per million and 100 parts per million in the initial feed. If the chlorine level drops below 10 parts per million during a 24 hour period, then flush, refill with fresh chlorine solution, and repeat for 24 hours. Provide certified bacteriological and contaminant test results from a state-approved or state-certified laboratory. Operate all valves and controls to assure thorough sterilization.

Page 15-6, Sub-article 1510-3 (B), Testing and Sterilization, seventh paragraph:
delete the words "may be performed concurrently or consecutively."
and replace with "shall be performed consecutively."

Page 15-7, Sub-aticle 1510-4, MEASUREMENT AND PAYMENT
add the following paragraph after line 7:

The quantity of *Ductile Iron Water Pipe Fittings* will be measured and paid per pound based on the published weights for ductile iron fittings, exclusive of the weights of any accessories, as listed in the "DI Fittings Weight Chart" located at the NCDOT Utilities web site. If the Contractor elects to use compact ductile iron water pipe fittings, measurement will be based on the weight of standard size ductile iron water pipe fittings. Any fitting not listed will be measured based on the published weights for ductile iron fittings listed in ANSI/AWWA C-110/A21.10. This is limited to pressure pipe 4 inches or larger.

Page 15-7, Sub-article 1510-4, MEASUREMENT AND PAYMENT
add the following pay item:

Pay Item	**Pay Unit**
Ductile Iron Water Pipe Fittings	Pound

Page 15-7, sub-article 1515-2 Materials,
Replace line 17 with the following:

Refer to the Water and Sewer Authority of Cabarrus County (WSACC) Standard Specification, dated August 2016.

Replace paragraph beginning "Double check valves…" with the following:

Double Check valves (DCV) and Reduced Pressure Zone principal (RPZ) backflow prevention assemblies shall be listed on the University of Southern California Foundation for Cross-Connection Control and Hydraulic Research list of approved backflow devices.

Page 15-9, Article 1515-4, MEASUREMENT AND PAYMENT
line 28, delete "fittings".

Page 15-11, Sub-article 1520-3(A)(2), Testing
replace line 5 with the following:

Test all 24" and smaller gravity sewer lines for leakage using infiltration, exfiltration, or air test. Perform visual inspection on gravity sewer lines larger than 24". Perform line and grade testing and deflection testing on all gravity sewer lines.

Page 15-13; Sub-article 1525-2, Materials
Replace line 9 with the following:

Refer to the Water and Sewer Authority of Cabarrus County (WSACC) Standard Specification, dated August 2016.

Page 15-20; Sub-Article 1550-4(B), Trenchless Methods
Replace the last paragraph with:

Pipe installed through directional drilling shall be installed through a bored hole with a diameter approximately the same as the outside diameter at the bell of the pipe to be installed. After the pipe is installed if the maximum space between the pipe and the bore wall is 1 inch or greater, grout shall be pumped through the bore until all space between the pipe and bore wall is filled.

Revise the *WSACC Standard Specifications,* August 2016*,* as follows:

Page 1, Section 15104, Resilient Seated Gate Valves

1. Scope – Delete the second sentence.

Page 2, Section 15104, Resilient Seated Gate Valves

2.06 Acceptable Manufacturers – Add Mueller Company

KCI TECHNOLOGIES
ENGINEERS | PLANNERS | SCIENTISTS | CONSTRUCTION MANAGERS

General:

The following utility companies have facilities that will be in conflict with the construction of this project:

A. City of Concord – Power (Distribution)
B. Windstream - Communications
C. Time Warner/Charter – Communications
D. AT&T – Communications

The conflicting facilities of these concerns will be adjusted prior to the date of availability, unless otherwise noted and are therefore listed in these special provisions for the benefit of the Contractor. All utility work listed herein will be done by the utility owners. All utilities are shown on the plans from the best available information.

The Contractor's attention is directed to Article 105-8 of the 2012 Standard Specifications.

Utilities Requiring Adjustment:

Utility relocations are shown on the Utility by Others Plans.

A) City of Concord – Power (Distribution)
Contact Information: Alex Burris
Alfred M. Brown Operations Ctr.
850 Warren C. Coleman Blvd.
P.O. Box 308
Concord, NC 28026
704-920-5335
burrisa@concordnc.gov

1) See Utilities by Others Plans.
2) Will need 6 months to complete relocations once right of way has been acquired. The anticipated utility relocation completion date is 7/6/18.

B) Windstream - Communications

Contact Information:

Jim Foley
Windstream
187 Buffalo Ave, NW
Concord, NC 28025
704-722-2822
James.foley@windstream.com

1) See Utilities by Others Plans.
2) Will need 4.5 months to schedule and complete relocations once right of way has been acquired. The anticipated utility relocation completion date is 5/18/18.

C) Time Warner/Charter – Communications

Contact Information:

Mike Connell
Time Warner/Charter Communications
909 Kansas St.
Kannapolis, NC 28083
704-378-2624
Michael.Connell1@charter.com

1) See Utilities by Others Plans.
2) Will need 2 weeks to complete relocations once right of way has been acquired. The anticipated utility relocation completion date is 1/31/18.

D) AT&T - Communications

Contact Information:

Eric Allen
AT&T Southeast
4100 South Stream Blvd.
Room 360
Charlotte, NC 28217
704-737-8009
ea5498@att.com

Kenny Allen
AT&T Southeast
704-206-0721
ka2609@att.com

1) See Utilities by Others Plans.

2) Will need 2 months to complete relocations once right of way has been acquired. The anticipated utility relocation completion date is 3/01/18.

Project Special Provisions
Erosion Control

STABILIZATION REQUIREMENTS:
(3-11-2016)

Stabilization for this project shall comply with the time frame guidelines as specified by the NCG-010000 general construction permit effective August 1, 2016 issued by the North Carolina Department of Environment and Natural Resources Division of Water Quality. Temporary or permanent ground cover stabilization shall occur within 7 calendar days from the last land-disturbing activity, with the following exceptions in which temporary or permanent ground cover shall be provided in 14 calendar days from the last land-disturbing activity:

- Slopes between 2:1 and 3:1, with a slope length of 10 ft. or less
- Slopes 3:1 or flatter, with a slope of length of 50 ft. or less
- Slopes 4:1 or flatter

The stabilization timeframe for High Quality Water (HQW) Zones shall be 7 calendar days with no exceptions for slope grades or lengths. High Quality Water Zones (HQW) Zones are defined by North Carolina Administrative Code 15A NCAC 04A.0105 (25). Temporary and permanent ground cover stabilization shall be achieved in accordance with the provisions in this contract and as directed.

SEEDING AND MULCHING: **(West)**

The kinds of seed and fertilizer, and the rates of application of seed, fertilizer, and limestone, shall be as stated below. During periods of overlapping dates, the kind of seed to be used shall be determined. All rates are in pounds per acre.

Shoulder and Median Areas

August 1 - June 1		**May 1 - September 1**	
20#	Kentucky Bluegrass	20#	Kentucky Bluegrass
75#	Hard Fescue	75#	Hard Fescue
25#	Rye Grain	10#	German or Browntop Millet
500#	Fertilizer	500#	Fertilizer
4000#	Limestone	4000#	Limestone

Areas Beyond the Mowing Pattern, Waste and Borrow Areas:

August 1 - June 1		**May 1 - September 1**	
100#	Tall Fescue	100#	Tall Fescue
15#	Kentucky Bluegrass	15#	Kentucky Bluegrass
30#	Hard Fescue	30#	Hard Fescue
25#	Rye Grain	10#	German or Browntop Millet
500#	Fertilizer	500#	Fertilizer

4000# Limestone 4000# Limestone

Approved Tall Fescue Cultivars

06 Dust	Escalade	Justice	Serengeti
2nd Millennium	Essential	Kalahari	Shelby
3rd Millennium	Evergreen 2	Kitty Hawk 2000	Sheridan
Apache III	Falcon IV	Legitimate	Signia
Avenger	Falcon NG	Lexington	Silver Hawk
Barlexas	Falcon V	LSD	Sliverstar
Barlexas II	Faith	Magellan	Shenandoah Elite
Bar Fa	Fat Cat	Matador	Sidewinder
Barrera	Festnova	Millennium SRP	Skyline
Barrington	Fidelity	Monet	Solara
Barrobusto	Finelawn Elite	Mustang 4	Southern Choice II
Barvado	Finelawn Xpress	Ninja 2	Speedway
Biltmore	Finesse II	Ol' Glory	Spyder LS
Bingo	Firebird	Olympic Gold	Sunset Gold
Bizem	Firecracker LS	Padre	Taccoa
Blackwatch	Firenza	Patagonia	Tanzania
Blade Runner II	Five Point	Pedigree	Trio
Bonsai	Focus	Picasso	Tahoe II
Braveheart	Forte	Piedmont	Talladega
Bravo	Garrison	Plantation	Tarheel
Bullseye	Gazelle II	Proseeds 5301	Terrano
Cannavaro	Gold Medallion	Prospect	Titan ltd
Catalyst	Grande 3	Pure Gold	Titanium LS
Cayenne	Greenbrooks	Quest	Tracer
Cessane Rz	Greenkeeper	Raptor II	Traverse SRP
Chipper	Gremlin	Rebel Exeda	Tulsa Time
Cochise IV	Greystone	Rebel Sentry	Turbo
Constitution	Guardian 21	Rebel IV	Turbo RZ
Corgi	Guardian 41	Regiment II	Tuxedo RZ
Corona	Hemi	Regenerate	Ultimate
Coyote	Honky Tonk	Rendition	Venture
Darlington	Hot Rod	Rhambler 2 SRP	Umbrella
Davinci	Hunter	Rembrandt	Van Gogh
Desire	Inferno	Reunion	Watchdog
Dominion	Innovator	Riverside	Wolfpack II
Dynamic	Integrity	RNP	Xtremegreen
Dynasty	Jaguar 3	Rocket	
Endeavor	Jamboree	Scorpion	

Approved Kentucky Bluegrass Cultivars:

4-Season	Blue Velvet	Gladstone	Quantum Leap
Alexa II	Blueberry	Granite	Rambo
America	Boomerang	Hampton	Rhapsody
Apollo	Brilliant	Harmonie	Rhythm
Arcadia	Cabernet	Impact	Rita
Aries	Champagne	Jefferson	Royce
Armada	Champlain	Juliet	Rubicon
Arrow	Chicago II	Jump Start	Rugby II
Arrowhead	Corsair	Keeneland	Shiraz
Aura	Courtyard	Langara	Showcase
Avid	Delight	Liberator	Skye
Award	Diva	Madison	Solar Eclipse
Awesome	Dynamo	Mercury	Sonoma
Bandera	Eagleton	Midnight	Sorbonne
Barduke	Emblem	Midnight II	Starburst
Barnique	Empire	Moon Shadow	Sudden Impact
Baroness	Envicta	Moonlight SLT	Total Eclipse
Barrister	Everest	Mystere	Touche
Barvette HGT	Everglade	Nu Destiny	Tsunami
Bedazzled	Excursion	NuChicago	Unique
Belissimo	Freedom II	NuGlade	Valor
Bewitched	Freedom III	Odyssey	Voyager II
Beyond	Front Page	Perfection	Washington
Blacksburg II	Futurity	Pinot	Zinfandel
Blackstone	Gaelic	Princeton 105	
Blue Note	Ginney II	Prosperity	

Approved Hard Fescue Cultivars:

Aurora II	Eureka II	Oxford	Scaldis II
Aurora Gold	Firefly	Reliant II	Spartan II
Berkshire	Granite	Reliant IV	Stonehenge
Bighorn GT	Heron	Rescue 911	
Chariot	Nordic	Rhino	

On cut and fill slopes 2:1 or steeper add 20# Sericea Lespedeza January 1 - December 31.

Fertilizer shall be 10-20-20 analysis. A different analysis of fertilizer may be used provided the 1-2-2 ratio is maintained and the rate of application adjusted to provide the same amount of plant food as a 10-20-20 analysis and as directed.

TEMPORARY SEEDING:

Fertilizer shall be the same analysis as specified for *Seeding and Mulching* and applied at the rate of 400 pounds and seeded at the rate of 50 pounds per acre. German Millet, or Browntop Millet shall be used in summer months and rye grain during the remainder of the year. The Engineer will determine the exact dates for using each kind of seed.

FERTILIZER TOPDRESSING:

Fertilizer used for topdressing shall be 16-8-8 grade and shall be applied at the rate of 500 pounds per acre. A different analysis of fertilizer may be used provided the 2-1-1 ratio is maintained and the rate of application adjusted to provide the same amount of plant food as 16-8-8 analysis and as directed.

SUPPLEMENTAL SEEDING:

The kinds of seed and proportions shall be the same as specified for *Seeding and Mulching*, and the rate of application may vary from 25# to 75# per acre. The actual rate per acre will be determined prior to the time of topdressing and the Contractor will be notified in writing of the rate per acre, total quantity needed, and areas on which to apply the supplemental seed. Minimum tillage equipment, consisting of a sod seeder shall be used for incorporating seed into the soil as to prevent disturbance of existing vegetation. A clodbuster (ball and chain) may be used where degree of slope prevents the use of a sod seeder.

MOWING:

The minimum mowing height on this project shall be six inches.

LAWN TYPE APPEARANCE:

All areas adjacent to lawns must be hand finished as directed to give a lawn type appearance. Remove all trash, debris, and stones ¾" and larger in diameter or other obstructions that could interfere with providing a smooth lawn type appearance. These areas shall be reseeded to match their original vegetative conditions, unless directed otherwise by the Field Operations Engineer.

RESPONSE FOR EROSION CONTROL:

Description

Furnish the labor, materials, tools and equipment necessary to move personnel, equipment, and supplies to the project necessary for the pursuit of any or all of the following work as shown herein, by an approved subcontractor.

Section	Erosion Control Item	Unit
1605	Temporary Silt Fence	LF

1606	Special Sediment Control Fence	LF/TON
1615	Temporary Mulching	ACR
1620	Seed - Temporary Seeding	LB
1620	Fertilizer - Temporary Seeding	TN
1631	Matting for Erosion Control	SY
SP	Coir Fiber Mat	SY
1640	Coir Fiber Baffles	LF
SP	Permanent Soil Reinforcement Mat	SY
1660	Seeding and Mulching	ACR
1661	Seed - Repair Seeding	LB
1661	Fertilizer - Repair Seeding	TON
1662	Seed - Supplemental Seeding	LB
1665	Fertilizer Topdressing	TON
SP	Safety/Highly Visible Fencing	LF
SP	Response for Erosion Control	EA

Construction Methods

Provide an approved subcontractor who performs an erosion control action as described in the NPDES Inspection Form SPPP30. Each erosion control action may include one or more of the above work items.

Measurement and Payment

Response for Erosion Control will be measured and paid for by counting the actual number of times the subcontractor moves onto the project, including borrow and waste sites, and satisfactorily completes an erosion control action described in Form 1675. The provisions of Article 104-5 of the *Standard Specifications* will not apply to this item of work.

Payment will be made under:

Pay Item	**Pay Unit**
Response for Erosion Control	Each

MINIMIZE REMOVAL OF VEGETATION:

The Contractor shall minimize removal of vegetation within project limits to the maximum extent practicable. Vegetation along stream banks and adjacent to other jurisdictional resources outside

the construction limits shall only be removed upon approval of Engineer. No additional payment will be made for this minimization work.

STOCKPILE AREAS:

The Contractor shall install and maintain erosion control devices sufficient to contain sediment around any erodible material stockpile areas as directed.

ACCESS AND HAUL ROADS:

At the end of each working day, the Contractor shall install or re-establish temporary diversions or earth berms across access/haul roads to direct runoff into sediment devices. Silt fence sections that are temporarily removed shall be reinstalled across access/haul roads at the end of each working day.

WASTE AND BORROW SOURCES:

Payment for temporary erosion control measures, except those made necessary by the Contractor's own negligence or for his own convenience, will be paid for at the appropriate contract unit price for the devices or measures utilized in borrow sources and waste areas.

No additional payment will be made for erosion control devices or permanent seeding and mulching in any commercial borrow or waste pit. All erosion and sediment control practices that may be required on a commercial borrow or waste site will be done at the Contractor's expense.

All offsite Staging Areas, Borrow and Waste sites shall be in accordance with "Borrow and Waste Site Reclamation Procedures for Contracted Projects" located at:

http://www.ncdot.gov/doh/operations/dp_chief_eng/roadside/fieldops/downloads/Files/ContractedReclamationProcedures.pdf

All forms and documents referenced in the "Borrow and Waste Site Reclamation Procedures for Contracted Projects" shall be included with the reclamation plans for offsite staging areas, and borrow and waste sites.

SAFETY FENCE AND JURISDICTIONAL FLAGGING:

Description

Safety Fence shall consist of furnishing materials, installing and maintaining polyethylene or polypropylene fence along the outside riparian buffer, wetland, or water boundary, or other boundaries located within the construction corridor to mark the areas that have been approved to infringe within the buffer, wetland, endangered vegetation, culturally sensitive areas or water. The fence shall be installed prior to any land disturbing activities.

Interior boundaries for jurisdictional areas noted above shall be delineated by stakes and highly visible flagging.

Jurisdictional boundaries at staging areas, waste sites, or borrow pits, whether considered outside or interior boundaries shall be delineated by stakes and highly visible flagging.

Materials

(A) Safety Fencing

Polyethylene or polypropylene fence shall be a highly visible preconstructed safety fence approved by the Engineer. The fence material shall have an ultraviolet coating.

Either wood posts or steel posts may be used. Wood posts shall be hardwood with a wedge or pencil tip at one end, and shall be at least 5 ft. in length with a minimum nominal 2" x 2" cross section. Steel posts shall be at least 5 ft. in length, and have a minimum weight of 0.85 lb/ft of length.

(B) Boundary Flagging

Wooden stakes shall be 4 feet in length with a minimum nominal 3/4" x 1-3/4" cross section. The flagging shall be at least 1" in width. The flagging material shall be vinyl and shall be orange in color and highly visible.

Construction Methods

No additional clearing and grubbing is anticipated for the installation of this fence. The fence shall be erected to conform to the general contour of the ground.

(A) Safety Fencing

Posts shall be set at a maximum spacing of 10 ft., maintained in a vertical position and hand set or set with a post driver. Posts shall be installed a minimum of 2 ft. into the ground. If hand set, all backfill material shall be thoroughly tamped. Wood posts may be sharpened to a dull point if power driven. Posts damaged by power driving shall be removed and replaced prior to final acceptance. The tops of all wood posts shall be cut at a 30-degree angle. The wood posts may, at the option of the Contractor, be cut at this angle either before or after the posts are erected.

The fence geotextile shall be attached to the wood posts with one 2" galvanized wire staple across each cable or to the steel posts with wire or other acceptable means.

Place construction stakes to establish the location of the safety fence in accordance with Article 105-9 or Article 801-1 of the *Standard Specifications.* No direct pay will be made for the staking of the safety fence. All stakeouts for safety fence shall be considered incidental to the work being paid for as "Construction Surveying", except that where there is no pay item for construction surveying, all safety fence stakeout will be performed by state forces.

The Contractor shall be required to maintain the safety fence in a satisfactory condition for the duration of the project as determined by the Engineer.

(B) Boundary Flagging

Boundary flagging delineation of interior boundaries shall consist of wooden stakes on 25 feet maximum intervals with highly visible orange flagging attached. Stakes shall be installed a minimum of 6" into the ground. Interior boundaries may be staked on a tangent that runs parallel to buffer but must not encroach on the buffer at any location. Interior boundaries of hand clearing shall be identified with a different colored flagging to distinguish it from mechanized clearing.

Boundary flagging delineation of interior boundaries will be placed in accordance with Article 105-9 or Article 801-1 of the *Standard Specifications*. No direct pay will be made for delineation of the interior boundaries. This delineation will be considered incidental to the work being paid for as *Construction Surveying,* except that where there is no pay item or construction surveying the cost of boundary flagging delineation shall be included in the unit prices bid for the various items in the contract. Installation for delineation of all jurisdictional boundaries at staging areas, waste sites, or borrow pits shall consist of wooden stakes on 25 feet maximum intervals with highly visible orange flagging attached. Stakes shall be installed a minimum of 6" into the ground. Additional flagging may be placed on overhanging vegetation to enhance visibility but does not substitute for installation of stakes.

Installation of boundary flagging for delineation of all jurisdictional boundaries at staging areas, waste sites, or borrow pits shall be performed in accordance with Subarticle 230-4(B)(5) or Subarticle 802-2(F) of the *Standard Specifications*. No direct pay will be made for this delineation, as the cost of same shall be included in the unit prices bid for the various items in the contract.

The Contractor shall be required to maintain alternative stakes and highly visible flagging in a satisfactory condition for the duration of the project as determined by the Engineer.

Measurement and Payment

Safety Fence will be measured and paid as the actual number of linear feet of polyethylene or polypropylene fence installed in place and accepted. Such payment will be full compensation including but not limited to furnishing and installing fence geotextile with necessary posts and post bracing, staples, tie wires, tools, equipment and incidentals necessary to complete this work.

Payment will be made under:

Pay Item	**Pay Unit**
Safety Fence	Linear Foot

COIR FIBER WATTLES WITH POLYACRYLAMIDE (PAM):

Description

Coir Fiber Wattles are tubular products consisting of coir fibers (coconut fibers) encased in coir fiber netting. Coir Fiber Wattles are used on slopes or channels to intercept runoff and act as a velocity break. Coir Fiber Wattles are to be placed at locations shown on the plans or as directed. Installation shall follow the detail provided in the plans and as directed. Work includes furnishing materials, installation of coir fiber wattles, matting installation, PAM application, and removing wattles.

Materials

Coir Fiber Wattle shall meet the following specifications:

100% Coir (Coconut) Fibers	
Minimum Diameter	12 in.
Minimum Density	3.5 lb/ft^3 +/- 10%
Net Material	Coir Fiber
Net Openings	2 in. x 2 in.
Net Strength	90 lbs.
Minimum Weight	2.6 lbs./ft. +/- 10%

Anchors: Stakes shall be used as anchors.

Wooden Stakes:

Provide hardwood stakes a minimum of 2-ft. long with a 2 in. x 2 in. nominal square cross section. One end of the stake must be sharpened or beveled to facilitate driving down into the underlying soil.

Matting shall meet the requirements of Article 1060-8 of the *Standard Specifications*, or shall meet specifications provided elsewhere in this contract.

Provide staples made of 0.125" diameter new steel wire formed into a *u* shape not less than 12" in length with a throat of 1" in width.

Polyacrylamide (PAM) shall be applied in powder form and shall be anionic or neutrally charged. Soil samples shall be obtained in areas where the wattles will be placed, and from offsite material used to construct the roadway, and analyzed for the appropriate PAM flocculant to be utilized with each wattle. The PAM product used shall be listed on the North Carolina Department of Environment and Natural Resources (NCDENR) Division of Water Quality (DWQ) web site as an approved PAM product for use in North Carolina.

Construction Methods

Coir Fiber Wattles shall be secured to the soil by wire staples approximately every 1 linear foot and at the end of each section of wattle. A minimum of 4 stakes shall be installed on the downstream side of the wattle with a maximum spacing of 2 linear feet along the wattle, and according to the detail. Install a minimum of 2 stakes on the upstream side of the wattle according to the detail provided in the plans. Stakes shall be driven into the ground a minimum of 10 in. with no more than 2 in. projecting from the top of the wattle. Drive stakes at an angle according to the detail provided in the plans.

Only install coir fiber wattle(s) to a height in ditch so flow will not wash around wattle and scour ditch slopes and according to the detail provided in the plans and as directed. Overlap adjoining sections of wattles a minimum of 6 in.

Installation of matting shall be in accordance with the detail provided in the plans, and in accordance with Article 1631-3 of the *Standard Specifications*, or in accordance with specifications provided elsewhere in this contract.

Apply PAM over the lower center portion of the coir fiber wattle where the water is going to flow over at a rate of 2 ounces per wattle, and 1 ounce of PAM on matting on each side of the wattle. PAM applications shall be done during construction activities after every rainfall event that is equal to or exceeds 0.50 in.

The Contractor shall maintain the coir fiber wattles until the project is accepted or until the wattles are removed, and shall remove and dispose of silt accumulations at the wattles when so directed in accordance with the requirements of Section 1630 of the *Standard Specifications*.

Measurement and Payment

Coir Fiber Wattles will be measured and paid for by the actual number of linear feet of wattles which are installed and accepted. Such price and payment will be full compensation for all work covered by this section, including, but not limited to, furnishing all materials, labor, equipment and incidentals necessary to install the *Coir Fiber Wattles*.

Matting will be measured and paid for in accordance with Article 1631-4 of the *Standard Specifications*, or in accordance with specifications provided elsewhere in this contract.

Polyacrylamide(PAM) will be measured and paid for by the actual weight in pounds of PAM applied to the coir fiber wattles. Such price and payment will be full compensation for all work covered by this section, including, but not limited to, furnishing all materials, labor, equipment and incidentals necessary to apply the *Polyacrylamide(PAM)*.

Payment will be made under:

Pay Item	Pay Unit
Polyacrylamide(PAM)	Pound
Coir Fiber Wattle	Linear Foot

SILT FENCE COIR FIBER WATTLE BREAK:
(8-21-12) 1605,1630

Description

Silt fence coir fiber wattle breaks are tubular products consisting of coir fibers (coconut fibers) encased in coir fiber netting and used in conjunction with temporary silt fence at the toe of fills to intercept runoff. Silt fence coir fiber wattle breaks are to be placed at locations shown on the plans or as directed. Installation shall follow the detail provided in the plans and as directed. Work includes furnishing materials, installation, maintenance and removing Silt fence coir fiber wattle breaks.

Materials

Coir fiber wattle shall meet the following specifications:

100% Coir (Coconut) Fibers	
Minimum Diameter	12"
Minimum Length	10 ft
Minimum Density	3.5 lb/cf ± 10%
Net Material	Coir Fiber
Net Openings	2" x 2"
Net Strength	90 lb.
Minimum Weight	2.6 lb/ft ± 10%

Stakes shall be used as anchors. Provide hardwood stakes a minimum of 2-ft long with a 2" x 2" nominal square cross section. One end of the stake shall be sharpened or beveled to facilitate driving down into the underlying soil.

Provide staples made of 0.125" diameter new steel wire formed into a U-shape not less than 12" in length with a throat of 1" in width.

Construction Methods

Excavate a trench the entire length of each wattle with a depth of 1" to 2" for the wattle to be placed. Secure silt fence coir fiber wattle breaks to the soil by wire staples approximately every linear foot and at the end of each wattle. Install at least 4 stakes on the downslope side of the wattle with a maximum spacing of 2 linear feet and according to the detail. Install at least 2 stakes on the upslope side of the silt fence coir fiber wattle break according to the detail provided in the

plans. Drive stakes into the ground at least 10" with no more than 2" projecting from the top of the wattle. Drive stakes at an angle according to the detail provided in the plans.

Install temporary silt fence in accordance with Section 1605 of the *2012 Standard Specifications* and overlap each downslope side of silt fence wattle break by 6".

Maintain the silt fence coir fiber wattle breaks until the project is accepted or until the silt fence coir fiber wattle breaks are removed, and remove and dispose of silt accumulations at the silt fence coir fiber wattle breaks when so directed in accordance with Section 1630 of the *2012 Standard Specifications*.

Measurement and Payment

Coir Fiber Wattle will be measured and paid as the actual number of linear feet of wattles installed and accepted. Such price and payment will be full compensation for all work covered by this provision, including, but not limited to, furnishing all materials, labor, equipment and incidentals necessary to install the silt fence coir fiber wattle break.

Payment will be made under:

Pay Item	Pay Unit
Coir Fiber Wattle	Linear Foot

COIR FIBER MAT:

Description

Furnish material, install and maintain coir fiber mat in locations shown on the plans or in locations as directed. Work includes providing all materials, excavating and backfilling, and placing and securing coir fiber mat with stakes, steel reinforcement bars or staples as directed.

Materials

Item	Section
Coir Fiber Mat	1060-14

Anchors: Stakes, reinforcement bars, or staples shall be used as anchors.

Wooden Stakes:

Provide hardwood stakes 12"- 24" long with a 2" x 2" nominal square cross section. One end of the stake must be sharpened or beveled to facilitate driving through the coir fiber mat and down into the underlying soil. The other end of the stake needs to have a 1"- 2" long head at the top with a 1"- 2" notch following to catch and secure the coir fiber mat.

Steel Reinforcement Bars:

Provide uncoated #10 steel reinforcement bars 24" nominal length. The bars shall have a 4" diameter bend at one end with a 4" straight section at the tip to catch and secure the coir fiber mat.

Staples:

Provide staples made of 0.125" diameter new steel wire formed into a *u* shape not less than 12" in length with a throat of 1" in width.

Construction Methods

Place the coir fiber mat immediately upon final grading. Provide a smooth soil surface free from stones, clods, or debris that will prevent the contact of the mat with the soil. Unroll the mat and apply without stretching such that it will lie smoothly but loosely on the soil surface.

For stream relocation applications, take care to preserve the required line, grade, and cross section of the area covered. Bury the top slope end of each piece of mat in a narrow trench at least 6 in. deep and tamp firmly. Where one roll of matting ends and a second roll begins, overlap the end of the upper roll over the buried end of the second roll so there is a 6 in. overlap. Construct check trenches at least 12 in. deep every 50 ft. longitudinally along the edges of the mat or as directed. Fold over and bury mat to the full depth of the trench, close and tamp firmly. Overlap mat at least 6 in. where 2 or more widths of mat are installed side by side.

Place anchors across the mat at the ends approximately 1 ft. apart. Place anchors along the outer edges and down the center of the mat 3 ft. apart.

Adjustments in the trenching or anchoring requirements to fit individual site conditions may be required.

Measurement and Payment

Coir Fiber Mat will be measured and paid for as the actual number of square yards measured along the surface of the ground over which coir fiber mat is installed and accepted.

No measurement will be made for anchor items.

Payment will be made under:

Pay Item	**Pay Unit**
Coir Fiber Mat	Square Yard

CONCRETE WASHOUT STRUCTURE:
(12-01-15)

Description

Concrete washout structures are enclosures above or below grade to contain concrete waste water and associated concrete mix from washing out ready-mix trucks, drums, pumps, or other equipment. Concrete washouts must collect and retain all the concrete washout water and solids, so that this material does not migrate to surface waters or into the ground water. These enclosures are not intended for concrete waste not associated with wash out operations.

The concrete washout structure may include constructed devices above or below ground and or commercially available devices designed specifically to capture concrete waste water.

Materials

Item	Section
Temporary Silt Fence	1605

Safety Fence shall meet the specifications as provided elsewhere in this contract.

Geomembrane basin liner shall meet the following minimum physical properties for low permeability; it shall consist of a polypropylene or polyethylene 10 mil think geomembrane. If the minimum setback dimensions can be achieved the liner is not required. (5 feet above groundwater, 50 feet from top of bank of perennial stream, other surface water body, or wetland.)

Construction Methods

Build an enclosed earthen berm or excavate to form an enclosure in accordance with the details and as directed.

Install temporary silt fence around the perimeter of the enclosure in accordance with the details and as directed if structure is not located in an area where existing erosion and sedimentation control devices are capable to containing any loss of sediment.

Post a sign with the words “Concrete Washout” in close proximity of the concrete washout area, so it is clearly visible to site personnel.

The construction details for the above grade and below grade concrete washout structures can be found on the following web page link:

http://www.ncdot.gov/doh/operations/dp_chief_eng/roadside/soil_water/details/

Alternate details for accommodating concrete washout may be submitted for review and approval.

The alternate details shall include the method used to retain and dispose of the concrete waste water within the project limits and in accordance with the minimum setback requirements. (5 feet above groundwater, 50 feet from top of bank of perennial stream, other surface water body, or wetland.)

Maintenance and Removal

Maintain the concrete washout structure(s) to provide adequate holding capacity plus a minimum freeboard of 12 inches. Remove and dispose of hardened concrete and return the structure to a functional condition after reaching 75% capacity.

Inspect concrete washout structures for damage and maintain for effectiveness.

Remove the concrete washout structures and sign upon project completion. Grade the earth material to match the existing contours and permanently seed and mulch area.

Measurement and Payment

Concrete Washout Structure will be paid for per each enclosure installed in accordance with the details. If alternate details are approved then those details will also be paid for per each approved and installed device.

Temporary Silt Fence will be measured and paid for in accordance with Article 1605-5 of the *Standard Specifications*.

No measurement will be made for other items or for over excavation or stockpiling.

Payment will be made under:

Pay Item	Pay Unit
Concrete Washout Structure	Each

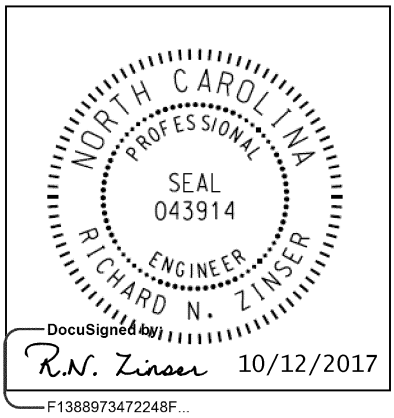

Signals and Intelligent Transportation Systems
Project Special Provisions
(Version 12.5)

Prepared By: RNZ
12-Oct-17

Contents

1. 2012 STANDARD SPECIFICATIONS FOR ROADS & STRUCTURES 3
1.1. POLYMER CONCRETE (PC) JUNCTION BOXES (1091-5(B)) 3
1.2. SUBMITTAL REQUIREMENTS (1098-1(B)) 3
1.3. JUNCTION BOXES (1098-5) 3
1.4. CONTROLLERS WITH CABINETS – MATERIAL (1751-2) 3
1.5. PEDESTALS (1098-14) 3
1.6. PEDESTALS (1743) 5
2. SIGNAL HEADS 6
2.1. MATERIALS 6
A. General: 6
B. Vehicle Signal Heads: 8
C. Pedestrian Signal Heads: 10
D. Signal Cable: 12
3. VIDEO IMAGING LOOP EMULATOR DETECTOR SYSTEMS 12
3.1. DESCRIPTION 12
3.2. MATERIALS 13
A. General: 13
B. Loop Emulator System: 14
C. Video Imaging Loop Emulator System Support: 16
3.3. CONSTRUCTION METHODS 16
3.4. MEASUREMENT AND PAYMENT 17
4. TRAFFIC SIGNAL SUPPORTS 17
4.1. METAL TRAFFIC SIGNAL SUPPORTS – ALL POLES 17
A. General: 17
B. Materials: 19
C. Construction Methods: 20
4.2. METAL POLE UPRIGHTS (VERTICAL MEMBERS) 21
A. Materials: 21
B. Construction Methods: 23
4.3. MAST ARMS 23
A. Materials: 23
B. Construction Methods: 24
4.4. DRILLED PIER FOUNDATIONS FOR METAL TRAFFIC SIGNAL POLES 24
A. Description: 24
B. Soil Test and Foundation Determination: 25
C. Drilled Pier Construction: 27
4.5. CUSTOM DESIGN OF TRAFFIC SIGNAL SUPPORTS 27
A. General: 27

B. Metal Poles: *28*
C. Mast Arms: *30*
4.6. POLE NUMBERING SYSTEM 31
A. New Poles *31*
B. Reused Poles *31*
4.7. REUSED POLE SHAFTS AND/OR MAST ARMS 31
4.8. MEASUREMENT AND PAYMENT 31

5. CONTROLLERS WITH CABINETS 32
5.1. MATERIALS – GENERAL CABINETS 32
5.2. MATERIALS – TYPE 170E CABINETS 33
A. Type 170 E Cabinets General: *33*
B. Type 170 E Cabinet Electrical Requirements: *33*
C. Type 170 E Cabinet Physical Requirements: *41*
D. Model 2018 Enhanced Conflict Monitor: *43*
E. Preemption and Sign Control Box *53*
5.3. MATERIALS – TYPE 170 DETECTOR SENSOR UNITS 56
5.4. MATERIALS – TYPE 2070E CONTROLLERS 56
A. General: *56*
B. Workshop: *56*
C. Measurement and Payment: *57*

6. BACK PULL FIBER OPTIC CABLE 57
6.1. DESCRIPTION 57
6.1. CONSTRUCTION 57
6.2. MEASUREMENT AND PAYMENT 58

1. 2012 STANDARD SPECIFICATIONS FOR ROADS & STRUCTURES

The 2012 Standard Specifications are revised as follows:

1.1. Polymer Concrete (PC) Junction Boxes (1091-5(B))

Page 10-202, revise paragraph starting on line 9 to read "Provide polymer concrete (PC) boxes which have bolted covers and open bottoms. Provide vertical extensions of 6" to 12" as required by project special provisions."

Page 10-202, revise sentence beginning on line 14 to read "Other thermoplastic materials may be used for components which are not normally exposed to sunlight."

1.2. Submittal Requirements (1098-1(B))

Page 10-208, replace paragraph on line 34 with the following:

Submit for approval catalog cuts and/or shop drawings for materials proposed for use on the project. Allow 40 days for review of each submittal. Do not fabricate or order material until receipt of Engineer's approval.

Submit 4 copies of each catalog cut and/or drawing and show for each component the material description, brand name, stock-number, size, rating, manufacturing specification and the intended use (identified by labeling all components with the corresponding contract line item number). Present the submittals neatly arranged in the same order as the contract bid items. Electronic submittals of catalog cuts and drawings may be accepted in lieu of hard copies.

One hard copy and an electronic (PDF) copy of reviewed submittals will be returned to the Engineer from the ITS and Signals Unit.

1.3. Junction Boxes (1098-5)

Page 10-212, sub-Section 1098-5(C) Oversized Junction Boxes

Revise sentence to read, "Provide oversized junction boxes and covers with minimum inside dimensions of 28"(l) x 15"(w) x 22"(h)."

1.4. Controllers with Cabinets – Material (1751-2)

Page 17-37, Section 1751-2 Material

Add the following paragraph:

When the plans or specifications require a Type 2070L controller, contractor may provide a Type 2070E controller. Unless otherwise allowed by the Engineer, provide controllers of only one type.

1.5. Pedestals (1098-14)

Page 10-218, sub-Section 1098-14(A) Pedestal Shaft

Replace "6063-T6" with "6061-T6" in the second paragraph on line 24.

Page 10-219, sub-Section 1098-14(B) Transformer Bases

Revise paragraph 2, lines 19 to 21 to read: "Provide a minimum access opening for all transformer bases of 8"x 8" with an access door that is attached with a ¼" x ¾" long stainless steel vandal proof screw to secure access door."

Add the following sentence after the second sentence of paragraph 3 on line 24: "Include a set screw prep and 3/8"-16 x 1" stainless steel set screw to secure the pedestal post to the pedestal base."

Page 10-219-220, sub-Section 1098-14 (C) Anchor Bolts

Replace entire paragraph on page 219, line 45-49 and page 220, line 1-5 with the following paragraphs:

For each pedestal, provide four (4) anchor bolts meeting the requirements of ASTM F1554, Grade 55, of the size and length specified in *Roadway Standard Drawings* No. 1743. Provide anchor bolts with coarse threads meeting the bolt/thread criteria specified by AISC. Provide threads for a minimum length of 4" on each end of the bolt. All thread anchor rods may be used. Ensure anchor bolts are hot-dipped galvanized in accordance with ASTM A153.

For each anchor bolt:

- Provide three (3) heavy hex nuts; one at the top, and 2 at the bottom (embedded end) of the anchor bolt. Provide hex nuts with coarse threads that match the anchor bolt thread requirements above. Provide hex nuts that meet the requirements of ASTM A563 Grade DH, ASTM A194, Grade 2H or equivalent. Galvanize all heavy hex nuts in accordance with ASTM A153.
- Provide one (1) standard size washer that meets the requirements of ASTM F436 for use between the two heavy hex nuts on the embedded end of the anchor bolt. Galvanize in accordance with ASTM A153.
- Provide one (1) extra thick, oversized washer for use over the slotted opening of the pedestal base. Fabricate washer to meet the chemical, physical, and heat treating requirements of ASTM F436. Fabricate the washer to the diameter and thickness needed. Galvanize fabricated washer in accordance with ASTM A153. Heat treat to the same requirements as F436 (i.e. 26 to 45 HRC).

  For a ¾” diameter anchor bolt mounted in a 1 ½” slotted opening, the dimensional requirements for an extra thick, oversized washer are as follows:

  - The minimum Outside Diameter (OD) required is 2 ¾”.
  - The hole Inside Diameter (ID) = Nominal Bolt Diameter + 1/16”= 0.812”.
  - The minimum washer thickness required is 3/8”.

  If anchor bolts less than ¾” in diameter are proposed for use to anchor pedestal bases, provide a washer calculation to ensure the washer thickness is adequate. To account for any pedestal manufacturing differences, verify the actual slotted opening width of the pedestal base anchoring points, and include it in the calculation. Anchor bolts that are less than ½” in diameter may not be used as they are not structurally adequate to support the pedestal and may inhibit the performance of the breakaway base.

  The fabrication process for thick washers makes the washer slightly tapered (i.e. the top OD and the bottom OD are not the same). Install thick washers with the larger diameter face down against the pedestal base casting.

  Do not use standard washers over the slotted opening of the pedestal base. Do not substitute or stack thin washers to achieve the required thickness specified or required.

In addition to the submittal requirements of Section 1098-1(B), provide Mill Certifications, Galvanization Certifications, and Heat Treating Certifications for all anchor bolts, fabricated washers, and structural hardware.

1.6. Pedestals (1743)

Page 17-34, Add the following new sub-Section:

1743-4 - Screw-In Helical Foundation Anchor Assembly

Description:

Furnish and install screw-in helical foundation as an alternative to the standard reinforced concrete foundation specified in Article 1743 "Pedestals" of the Standard Specifications, for supporting Type I and Type II Pedestals. Do not use for Type III Pedestals.

Materials for Type I – Pedestrian Pushbutton Post:

Fabricate pipe assembly consisting of a 4" diameter x 56" long pipe, single helical blade and square fixed attachment plate. Furnish pipe in accordance with ASTM A-53 ERW Grade B and include a 2" x 3" cable opening in the pipe at 18" below the attachment plate. Furnish steel attachment plate and helical blade in accordance with ASTM A-36. Include (4) slotted mounting holes in the attachment plate to fit bolt circles ranging from 7-3/4" to 14-3/4" diameter. Furnish additional 3/4" keyholes at slotted holes to permit anchor bolt installation and replacement from top surface. Include combination bolt-head retainer and dirt scrapers at the attachment plate underside to allow for a level or flush-mount plate installation with respect to the finished grade. Galvanize pipe assembly components in accordance with AASHTO M 111 or an approved equivalent.

Furnish (4) 3/4"-10NC x 3" square head anchor bolts to meet the requirements of ASTM 325. Provide (4) 3/4" plain flat galvanized washers, (4) 3/16" thick galvanized plate washers and (4) 3/4" galvanized hex nuts. Galvanize in accordance with AASHTO M 111 or an approved equivalent.

Construction Methods for Type I – Pedestrian Pushbutton Post:

Advance or mechanically screw foundation into soil up until top of attachment plate is level with finished grade. Slide the anchor bolt heads through the keyhole openings and under the attachment plate with threads pointing up. Bolt the pedestal base to the foundation attachment plate. For further construction methods, see manufacturer's installation drawings.

Materials for Type II – Normal-Duty Pedestal:

Fabricate pipe assembly consisting of a 6" diameter x 60" long, single helical blade, 1-1/4" diameter stinger rod and square fixed attachment plate. Furnish pipe in accordance with ASTM A-53 ERW Grade B using schedule 40 wall thickness and include a 2" x 3" cable opening in the pipe at 18" below the attachment plate. Furnish steel attachment plate, helical blade and stinger rod in accordance with ASTM A-36. Include (4) slotted mounting holes in the attachment plate to fit bolt circles ranging from 10" to 15" diameter. Furnish additional 1-1/4" keyholes at slotted holes to permit anchor bolt installation and replacement from top surface. Include combination bolt-head retainer and dirt scrapers at the attachment plate underside to allow for a level or flush-mount plate installation with respect to the finished grade. Galvanize pipe assembly components in accordance with AASHTO M 111 or an approved equivalent.

Furnish (4) 1"-8NC x 4" galvanized Grade 5 square head anchor bolts. Provide (4) 1" plain flat galvanized washers and (4) 1" galvanized hex nuts. Galvanize in accordance with AASHTO M 111 or an approved equivalent.

Construction Methods for Type II – Normal-Duty Pedestal:

Advance or mechanically screw foundation into soil up until top of attachment plate is level with finished grade. Slide the anchor bolt heads through the keyhole openings and under the attachment plate with threads pointing up. Bolt the pedestal base to the foundation attachment plate.

For further construction methods, see manufacturer's installation drawings.

Page 17-34, revise Measurement and Payment to sub-Section 1743-5.

Revise the last paragraph to read:

No measurement will be made for pedestal foundations, pedestal screw-in helical foundations, grounding systems and any peripheral pedestal mounting hardware as these are incidental to furnishing and installing pedestals.

2. SIGNAL HEADS

2.1. MATERIALS

A. General:

Fabricate vehicle signal head housings and end caps from die-cast aluminum. Fabricate 12-inch and 16-inch pedestrian signal head housings and end caps from die-cast aluminum. Fabricate 9-inch pedestrian signal head housings, end caps, and visors from virgin polycarbonate material. Provide visor mounting screws, door latches, and hinge pins fabricated from stainless steel. Provide interior screws, fasteners, and metal parts fabricated from stainless steel.

Fabricate tunnel and traditional visors from sheet aluminum.

Paint all surfaces inside and outside of signal housings and doors. Paint outside surfaces of tunnel and traditional visors, wire outlet bodies, wire entrance fitting brackets and end caps when supplied as components of messenger cable mounting assemblies, pole and pedestal mounting assemblies, and pedestrian pushbutton housings. Have electrostatically-applied, fused-polyester paint in highway yellow (Federal Standard 595C, Color Chip Number 13538) a minimum of 2.5 to 3.5 mils thick. Do not apply paint to the latching hardware, rigid vehicle signal head mounting brackets for mast-arm attachments, messenger cable hanger components or balance adjuster components.

Have the interior surfaces of tunnel and traditional visors painted an alkyd urea black synthetic baking enamel with a minimum gloss reflectance and meeting the requirements of MIL-E-10169, “Enamel Heat Resisting, Instrument Black.”

Where required, provide polycarbonate signal heads and visors that comply with the provisions pertaining to the aluminum signal heads listed on the QPL with the following exceptions:

Fabricate signal head housings, end caps, and visors from virgin polycarbonate material. Provide UV stabilized polycarbonate plastic with a minimum thickness of 0.1 ± 0.01 inches that is highway yellow (Federal Standard 595C, Color Chip 13538). Ensure the color is incorporated into the plastic material before molding the signal head housings and end caps. Ensure the plastic formulation provides the following physical properties in the assembly (tests may be performed on separately molded specimens):

Test	Required	Method
Specific Gravity	1.17 minimum	ASTM D 792
Flammability	Self-extinguishing	ASTM D 635
Tensile Strength, yield, PSI	8500 minimum	ASTM D 638
Izod impact strength, ft-lb/in [notched, 1/8 inch]	12 minimum	ASTM D 256

For pole mounting, provide side of pole mounting assemblies with framework and all other hardware necessary to make complete, watertight connections of the signal heads to the poles and pedestals. Fabricate the mounting assemblies and frames from aluminum with all necessary hardware, screws, washers, etc. to be stainless steel. Provide mounting fittings that match the positive locking device on the signal head with the serrations integrally cast into the brackets.

Provide upper and lower pole plates that have a 1 ¼-inch vertical conduit entrance hubs with the hubs capped on the lower plate and 1 ½-inch horizontal hubs. Ensure that the assemblies provide rigid attachments to poles and pedestals so as to allow no twisting or swaying of the signal heads. Ensure that all raceways are free of sharp edges and protrusions, and can accommodate a minimum of ten Number 14 AWG conductors.

For pedestal mounting, provide a post-top slipfitter mounting assembly that matches the positive locking device on the signal head with serrations integrally cast into the slipfitter. Provide stainless steel hardware, screws, washers, etc. Provide a minimum of six 3/8 X 3/4-inch long square head bolts for attachment to pedestal. Provide a center post for multi-way slipfitters.

For light emitting diode (LED) traffic signal modules, provide the following requirements for inclusion on the Department's Qualified Products List for traffic signal equipment.

1. Sample submittal,
2. Third-party independent laboratory testing results for each submitted module with evidence of testing and conformance with all of the Design Qualification Testing specified in section 6.4 of each of the following Institute of Transportation Engineers (ITE) specifications:
   - Vehicle Traffic Control Signal Heads – Light Emitting Diode (LED) Circular Signal Supplement
   - Vehicle Traffic Control Signal Heads – Light Emitting Diode (LED) Vehicle Arrow Traffic Signal Supplement
   - Pedestrian Traffic Control Signal Indications –Light Emitting Diode (LED) Signal Modules.

   (Note: The Department currently recognizes two approved independent testing laboratories. They are Intertek ETL Semko and Light Metrics, Incorporated with Garwood Laboratories. Independent laboratory tests from other laboratories may be considered as part of the QPL submittal at the discretion of the Department,
3. Evidence of conformance with the requirements of these specifications,
4. A manufacturer's warranty statement in accordance with the required warranty, and
5. Submittal of manufacturer's design and production documentation for the model, including but not limited to, electrical schematics, electronic component values, proprietary part numbers, bill of materials, and production electrical and photometric test parameters.
6. Evidence of approval of the product to bear the Intertek ETL Verified product label for LED traffic signal modules.

In addition to meeting the performance requirements for the minimum period of 60 months, provide a written warranty against defects in materials and workmanship for the modules for a period of 60 months after installation of the modules. During the warranty period, the manufacturer must provide new replacement modules within 45 days of receipt of modules that have failed at no cost to the State. Repaired or refurbished modules may not be used to fulfill the manufacturer's warranty obligations. Provide manufacturer's warranty documentation to the Department during evaluation of product for inclusion on Qualified Products List (QPL).

B. Vehicle Signal Heads:

Comply with the ITE standard "Vehicle Traffic Control Signal Heads". Provide housings with provisions for attaching backplates.

Provide visors that are 8 inches in length for 8-inch vehicle signal head sections. Provide visors that are 10 inches in length for 12-inch vehicle signal heads.

Provide a termination block with one empty terminal for field wiring for each indication plus one empty terminal for the neutral conductor. Have all signal sections wired to the termination block. Provide barriers between the terminals that have terminal screws with a minimum Number 8 thread size and that will accommodate and secure spade lugs sized for a Number 10 terminal screw.

Mount termination blocks in the yellow signal head sections on all in-line vehicle signal heads. Mount the termination block in the red section on five-section vehicle signal heads.

Furnish vehicle signal head interconnecting brackets. Provide one-piece aluminum brackets less than 4.5 inches in height and with no threaded pipe connections. Provide hand holes on the bottom of the brackets to aid in installing wires to the signal heads. Lower brackets that carry no wires and are used only for connecting the bottom signal sections together may be flat in construction.

For messenger cable mounting, provide messenger cable hangers, wire outlet bodies, balance adjusters, bottom caps, wire entrance fitting brackets, and all other hardware necessary to make complete, watertight connections of the vehicle signal heads to the messenger cable. Fabricate messenger cable hanger components, wire outlet bodies and balance adjuster components from stainless steel or malleable iron galvanized in accordance with ASTM A153 (Class A) or ASTM A123. Provide serrated rings made of aluminum. Provide messenger cable hangers with U-bolt clamps. Fabricate washers, screws, hex-head bolts and associated nuts, clevis pins, cotter pins, U-bolt clamps and nuts from stainless steel.

For mast-arm mounting, provide rigid vehicle signal head mounting brackets and all other hardware necessary to make complete, watertight connections of the vehicle signal heads to the mast arms and to provide a means for vertically adjusting the vehicle signal heads to proper alignment. Fabricate the mounting assemblies from aluminum, and provide serrated rings made of aluminum. Provide stainless steel cable attachment assemblies to secure the brackets to the mast arms. Ensure all fastening hardware and fasteners are fabricated from stainless steel.

Provide LED vehicular traffic signal modules (hereafter referred to as modules) that consist of an assembly that uses LEDs as the light source in lieu of an incandescent lamp for use in traffic signal sections. Use LEDs that are aluminum indium gallium phosphorus (AlInGaP) technology for red and yellow indications and indium gallium nitride (InGaN) for green indications. Install the ultra bright type LEDs that are rated for 100,000 hours of continuous operation from -40°F to +165°F. Design modules to have a minimum useful life of 60 months and to meet all parameters of this specification during this period of useful life.

For the modules, provide spade terminals crimped to the lead wires and sized for a #10 screw connection to the existing terminal block in a standard signal head. Do not provide other types of crimped terminals with a spade adapter.

Ensure the power supply is integral to the module assembly. On the back of the module, permanently mark the date of manufacture (month & year) or some other method of identifying date of manufacture.

Tint the red, yellow and green lenses to correspond with the wavelength (chromaticity) of the LED. Transparent tinting films are unacceptable. Provide a lens that is integral to the unit with a smooth outer surface.

1. LED Circular Signal Modules:

Provide modules in the following configurations: 12-inch circular sections, and 8-inch circular sections. All makes and models of LED modules purchased for use on the State Highway System shall appear on the current NCDOT Traffic Signal Qualified Products List (QPL).

Provide the manufacturer's model number and the product number (assigned by the Department) for each module that appears on the 2012 or most recent Qualified Products List. In addition, provide manufacturer's certification in accordance with Article 106-3 of the *Standard Specifications,* that each module meets or exceeds the ITE "Vehicle Traffic Control Signal Heads – Light Emitting Diode (LED) Circular Signal Supplement" dated June 27, 2005 (hereafter referred to as VTCSH Circular Supplement) and other requirements stated in this specification.

Provide modules that meet the following requirements when tested under the procedures outlined in the VTCSH Circular Supplement:

Module Type	Max. Wattage at 165° F	Nominal Wattage at 77° F
12-inch red circular	17	11
8-inch red circular	13	8
12-inch green circular	15	15
8-inch green circular	12	12

For yellow circular signal modules, provide modules tested under the procedures outlined in the VTCSH Circular Supplement to insure power required at 77° F is 22 Watts or less for the 12-inch circular module and 13 Watts or less for the 8-inch circular module.

Note: Use a wattmeter having an accuracy of ±1% to measure the nominal wattage and maximum wattage of a circular traffic signal module. Power may also be derived from voltage, current and power factor measurements.

2. LED Arrow Signal Modules

Provide 12-inch omnidirectional arrow signal modules. All makes and models of LED modules purchased for use on the State Highway System shall appear on the current NCDOT Traffic Signal Qualified Products List (QPL).

Provide the manufacturer's model number and the product number (assigned by the Department) for each module that appears on the 2012 or most recent Qualified Products List. In addition, provide manufacturer's certification in accordance with Article 106-3 of the *Standard Specifications,* that each module meets or exceeds the requirements for 12-inch omnidirectional modules specified in the ITE "Vehicle Traffic Control Signal Heads – Light Emitting Diode (LED) Vehicle Arrow Traffic Signal Supplement" dated July 1, 2007 (hereafter referred to as VTCSH Arrow Supplement) and other requirements stated in this specification.

Provide modules that meet the following requirements when tested under the procedures outlined in the VTCSH Arrow Supplement:

Module Type	Max. Wattage at 165° F	Nominal Wattage at 77° F
12-inch red arrow	12	9
12-inch green arrow	11	11

For yellow arrow signal modules, provide modules tested under the procedures outlined in the VTCSH Arrow Supplement to insure power required at 77° F is 12 Watts or less.

Note: Use a wattmeter having an accuracy of ±1% to measure the nominal wattage and maximum wattage of an arrow traffic signal module. Power may also be derived from voltage, current and power factor measurements.

3. LED U-Turn Arrow Signal Modules:

Provide modules in the following configurations: 12-inch left u-turn arrow signal modules and 12-inch right u-turn arrow signal modules.

Modules are not required to be listed on the ITS and Signals Qualified Products List. Provide manufacturer's certification in accordance with Article 106-3 of the *Standard Specifications,* that each module meets or exceeds the ITE "Vehicle Traffic Control Signal Heads – Light Emitting Diode (LED) Circular Signal Supplement" dated June 27, 2005 (hereafter referred to as VTCSH Circular Supplement) and other requirements stated in this specification.

Provide modules that have minimum maintained luminous intensity values that are not less than 16% of the values calculated using the method described in section 4.1 of the VTCSH Circular Supplement.

Provide modules that meet the following requirements when tested under the procedures outlined in the VTCSH Circular Supplement:

Module Type	Max. Wattage at 165° F	Nominal Wattage at 77° F
12-inch red u-turn arrow	17	11
12-inch green u-turn arrow	15	15

For yellow u-turn arrow signal modules, provide modules tested under the procedures outlined in the VTCSH Circular Supplement to ensure power required at 77° F is 22 Watts or less.

Note: Use a wattmeter having an accuracy of ±1% to measure the nominal wattage and maximum wattage of a circular traffic signal module. Power may also be derived from voltage, current and power factor measurements.

C. Pedestrian Signal Heads:

Provide pedestrian signal heads with international symbols that meet the MUTCD. Do not provide letter indications.

Comply with the ITE standard for "Pedestrian Traffic Control Signal Indications" and the following sections of the ITE standard for "Vehicle Traffic Control Signal Heads" in effect on the date of advertisement:

- Section 3.00 - "Physical and Mechanical Requirements"
- Section 4.01 - "Housing, Door, and Visor: General"
- Section 4.04 - "Housing, Door, and Visor: Materials and Fabrication"
- Section 7.00 - "Exterior Finish"

Provide a double-row termination block with three empty terminals and number 10 screws for field wiring. Provide barriers between the terminals that accommodate a spade lug sized for number 10 terminal screws. Mount the termination block in the hand section. Wire all signal sections to the terminal block.

Where required by the plans, provide 16-inch pedestrian signal heads with traditional three-sided, rectangular visors, 6 inches long. Where required by the plans, provide 12-inch pedestrian signal heads with traditional three-sided, rectangular visors, 8 inches long.

Provide 2-inch diameter pedestrian push-buttons with weather-tight housings fabricated from die-cast aluminum and threading in compliance with the NEC for rigid metal conduit. Provide a weep hole in the housing bottom and ensure that the unit is vandal resistant.

Provide push-button housings that are suitable for mounting on flat or curved surfaces and that will accept 1/2-inch conduit installed in the top. Provide units that have a heavy duty push-button assembly with a sturdy, momentary, normally-open switch. Have contacts that are electrically insulated from the housing and push-button. Ensure that the push-buttons are rated for a minimum of 5 mA at 24 volts DC and 250 mA at 12 volts AC.

Provide standard R10-3 signs with mounting hardware that comply with the MUTCD in effect on the date of advertisement. Provide R10-3E signs for countdown pedestrian heads and R10-3B for non-countdown pedestrian heads.

Design the LED pedestrian traffic signal modules (hereafter referred to as modules) for installation into standard pedestrian traffic signal sections that do not contain the incandescent signal section reflector, lens, eggcrate visor, gasket, or socket. Provide modules that consist of an assembly that uses LEDs as the light source in lieu of an incandescent lamp. Use LEDs that are of the latest aluminum indium gallium phosphorus (AlInGaP) technology for the Portland Orange hand and countdown displays. Use LEDs that are of the latest indium gallium nitride (InGaN) technology for the Lunar White walking man displays. Install the ultra-bright type LEDs that are rated for 100,000 hours of continuous operation from -40°F to +165°F. Design modules to have a minimum useful life of 60 months and to meet all parameters of this specification during this period of useful life.

Design all modules to operate using a standard 3 - wire field installation. Provide spade terminals crimped to the lead wires and sized for a #10 screw connection to the existing terminal block in a standard pedestrian signal housing. Do not provide other types of crimped terminals with a spade adapter.

Ensure the power supply is integral to the module assembly. On the back of the module, permanently mark the date of manufacture (month & year) or some other method of identifying date of manufacture.

Provide modules in the following configuration: 16-inch displays which have the solid hand/walking man overlay on the left and the countdown on the right, and 12-inch displays which have the solid hand/walking man module as an overlay. All makes and models of LED modules purchased for use on the State Highway System shall appear on the current NCDOT Traffic Signal Qualified Products List (QPL).

Provide the manufacturer's model number and the product number (assigned by the Department) for each module that appears on the 2012 or most recent Qualified Products List. In addition, provide manufacturer's certification in accordance with Article 106-3 of the *Standard Specifications,* that each module meets or exceeds the ITE "Pedestrian Traffic Control Signal Indicators - Light Emitting

Diode (LED) Signal Modules" dated August 04, 2010 (hereafter referred to as PTCSI Pedestrian Standard) and other requirements stated in this specification.

Provide modules that meet the following requirements when tested under the procedures outlined in the PTCSI Pedestrian Standard:

Module Type	Max. Wattage at 165° F	Nominal Wattage at 77° F
Hand Indication	16	13
Walking Man Indication	12	9
Countdown Indication	16	13

Note: Use a wattmeter having an accuracy of ±1% to measure the nominal wattage and maximum wattage of a circular traffic signal module. Power may also be derived from voltage, current and power factor measurements.

Provide module lens that is hard coated or otherwise made to comply with the material exposure and weathering effects requirements of the Society of Automotive Engineers (SAE) J576. Ensure all exposed components of the module are suitable for prolonged exposure to the environment, without appreciable degradation that would interfere with function or appearance.

Ensure the countdown display continuously monitors the traffic controller to automatically learn the pedestrian phase time and update for subsequent changes to the pedestrian phase time.

Ensure the countdown display begins normal operation upon the completion of the preemption sequence and no more than one pedestrian clearance cycle.

D. Signal Cable:

Furnish 16-4 and 16-7 signal cable that complies with IMSA specification 20-1 except provide the following conductor insulation colors:

- For 16-4 cable: white, yellow, red, and green
- For 16-7 cable: white, yellow, red, green, yellow with black stripe tracer, red with black stripe tracer, and green with black stripe tracer. Apply continuous stripe tracer on conductor insulation with a longitudinal or spiral pattern.

Provide a ripcord to allow the cable jacket to be opened without using a cutter. IMSA specification 19-1 will not be acceptable. Provide a cable jacket labeled with the IMSA specification number and provide conductors constructed of stranded copper.

3. VIDEO IMAGING LOOP EMULATOR DETECTOR SYSTEMS

3.1. DESCRIPTION

Design, furnish, provide training, and install video imaging loop emulator detection systems with all necessary hardware in accordance with the plans and specifications.

Unless otherwise specified in the contract, all loop emulator detection equipment will remain the property of the contractor.

3.2. MATERIALS

A. General:

Material and equipment furnished under this section must be pre-approved on the Department's QPL by the date of installation except miscellaneous hardware such as cables and mounting hardware do not need to be pre-approved.

Used equipment will be acceptable provided the following conditions have been met:

- Equipment is listed on the current QPL.
- Equipment is in good working condition.
- Equipment is to remain the property of the contractor.

Ensure that software is licensed for use by the Department and by any other agency responsible for maintaining or operating the loop emulation system. Provide the Department with a license to duplicate and distribute the software as necessary for design and maintenance support.

Design and furnish video imaging loop emulator detection systems that detect vehicles at signalized intersections by processing video images and providing detection outputs to the signal controller in real time (within 112 milliseconds of vehicle arrival).

Furnish all required camera sensor units, loop emulator processor units, hardware and software packages, cabling, poles, mast arms, harnesses, camera mounting assemblies, surge protection panels, grounding systems, messenger cable and all necessary hardware. Furnish systems that allow the display of detection zones superimposed on an image of the roadway on a Department-furnished monitor or laptop computer screen. Ensure detection zones can be defined and data entered using a simple keyboard or mouse and monitor, or using a laptop PC with software.

Provide design drawings showing design details and camera sensor unit locations for review and acceptance before installation. Provide mounting height and location requirements for camera sensor units on the design based on site survey. Design video imaging loop emulator detection systems with all necessary hardware. Indicate all necessary poles, spans, mast arms, luminaire arms, cables, camera mounting assemblies and hardware to achieve the required detection zones where Department owned poles are not adequate to locate the camera sensor units. Do not design for the installation of poles in medians.

Obtain the Engineer's approval before furnishing video imaging loop emulator detection systems. The contractor is responsible for the final design of video imaging loop emulator detection systems. Review and acceptance of the designs by the Department does not relieve the contractor from the responsibility to provide fully functional systems and to ensure that the required detection zones can be provided.

Provide the ability to program each detection call (input to the controller) with the following functions:

- Full Time Delay – Delay timer is active continuously,
- Normal Delay – Delay timer is inhibited when assigned phase is green (except when used with TS 2 and 170/2070L controllers),
- Extend – Call is extended for this amount of time after vehicle leaves detection area,

- Delay Call/Extend Call – This feature uses a combination of full time delay and extend time on the same detection call. Ensure operation is as follows: Vehicle calls are received after the delay timer times out. When a call is detected, it is held until the detection area is empty and the programmed extend time expires. If another vehicle enters the detection area before the extend timer times out, the call is held and the extend time is reset. When the extend timer times out, the delay timer has to expire before another vehicle call can be received.

Provide the ability to program each detection zone as one of the following functions:

- Presence detector,
- Directional presence detector,
- Pulse detector,
- Directional pulse detector.

Ensure previously defined detector zones and configurations can be edited.

Provide each individual system with all the necessary equipment to focus and zoom the camera lenses without the need to enter the camera enclosure.

Provide systems that allow for the placement of at least 8 detection zones within the combined field of view of a single camera sensor unit. Provide a minimum of 8 detection outputs per camera.

Provide detection zones that can be overlapped. Ensure systems reliably detect vehicles when the horizontal distance from the camera sensor unit to the detection zone area is less than ten times the mounting height of the sensor. Ensure systems detect vehicles in multiple travel lanes.

Ensure systems can detect vehicle presence within a 98 to 102 percent accuracy (up to 2 percent of the vehicles missed and up to 2 percent of false detection) for clear, dry, daylight conditions, a 96 to 105 percent accuracy (up to 4 percent of the vehicles missed and up to 5 percent false detection) for dawn and dusk conditions, and a 96 percent accuracy (up to 4 percent of the vehicles missed) for night and adverse conditions (fog, snow, rain, etc.) using standard sensor optics and in the absence of occlusion.

Repair and replace all failed components within 72 hours.

The Department may conduct field-testing to ensure the accuracy of completed video imaging loop emulator detection systems.

B. Loop Emulator System:

Furnish loop emulator systems that receive and simultaneously process information from camera sensor units, and provides detector outputs to signal controllers.

Ensure systems provide the following:

- Operate in a typical roadside environment and meet the environmental specifications and are fully compatible with NEMA TS 1, NEMA TS 2, or Type 170/2070L controllers and cabinets,
- provide a “fail-safe” mode whereby failure of one or more of the camera sensor units or power failure of the loop emulator system will cause constant calls to be placed on the affected vehicle detection outputs to the signal controller,

- provide compensation for minor camera movement of up to 2 percent of the field of view at 400 feet without falsely detecting vehicles,
- process the video at a minimum rate of 30 times per second,
- provide separate wired connectors inside the controller cabinet for video recording each camera,
- provide remote video monitoring with a minimum refresh rate at 1 frame per second over a standard dial-up telephone line,
- provide remote video detection monitoring.

Furnish camera sensor units that comply with the following:

- have an output signal conforming to EIA RS-170 standard,
- have a nominal output impedance of 75 ohms,
- be immune to bright light sources, or have built in circuitry or protective devices to prevent damage to the sensor when pointed directly at strong light sources,
- be housed in a light colored environmental enclosure that is water proof and dust tight, and that conforms to NEMA-4 specifications or better,
- simultaneously monitor at least five travel lanes when placed at the proper mounting location with a zoom lens,
- have a sunshield attached to the environmental enclosure to minimize solar heating,
- meet FCC class B requirements for electromagnetic interference emissions,
- have a heater attached to the viewing window of the environmental enclosure to prevent ice and condensation in cold weather.

Where coaxial video cables and other cables are required between the camera sensor and other components located in the controller cabinet, furnish surge protection in the controller cabinet.

If furnishing coaxial communications cable comply with the following, as recommended by the approved loop emulator manufacturer:

- Number 20 AWG, solid bare copper conductor terminated with crimped-on BNC connectors (do not use BNC adapters) from the camera sensor to the signal controller cabinet.
- Number 22 AWG, stranded bare copper conductor terminated with crimped-on BNC connectors (do not use BNC adapters) from the camera sensor unit to the junction box, and within the signal controller cabinet.

Furnish power cable appropriately sized to meet the power requirements of the sensors. At a minimum, provide three conductor 120 VAC field power cable.

As determined during the site survey, furnish sensor junction boxes with nominal 6 x 10 x 6 inches dimensions at each sensor location. Provide terminal blocks and tie points for coaxial cable.

C. Video Imaging Loop Emulator System Support:

Furnish video imaging loop emulator systems with either a simple keyboard or a mouse with monitor and appropriate software, or with system software for use on department-owned laptop PCs. Ensure the system is Windows 2000 and Windows XP compatible.

Provide Windows 2000 and Windows XP compatible personal computer software, if needed, to provide remote video and video detection monitoring.

Ensure systems allow the user to edit previously defined detector configurations. When a vehicle is within a detection zone, provide for a change in color or intensity of the detection zone perimeter or other appropriate display changes on the Department-furnished monitor or laptop computer screen.

Provide cabling and interconnection hardware with 6-foot minimum length interconnection cable to interface with the system.

Provide all associated equipment manuals and documentation.

3.3. CONSTRUCTION METHODS

Arrange and conduct site surveys with the system manufacturer's representative and Department personnel to determine proper camera sensor unit selection and placement. Provide the Department at least 3 working days notice before conducting site surveys. Upon completion of the site surveys the Department will provide revised plans reflecting the findings of the site survey.

Before beginning work at locations requiring video imaging loop emulator detection systems, furnish system software. Upon activation of detection zones, provide detector configuration files. Ensure that up-to-date detection configuration files are furnished for various detection zone configurations that may be required for construction phasing.

Place into operation loop emulator detection systems. Configure loop emulator detection systems to achieve required detection in designated zones. Have a certified manufacturer's representative on site to supervise and assist with installation, set up, and testing of the system.

Install the necessary processing and communications equipment in the signal controller cabinet. Make all necessary modifications to install equipment, cabling harnesses, and camera sensor interface panels with surge suppression.

Perform modifications to camera sensor unit gain, sensitivity, and iris limits necessary to complete the installation.

Do not install camera sensor units on signal poles unless approved by the Engineer.

Install the necessary cables from each sensor to the signal controller cabinet along signal cabling routes. Install surge protection and terminate all cable conductors.

Relocate camera sensor units and reconfigure detection zones as necessary according to the plans for construction phases.

Provide at least 8 hours of training on the set up, operation, troubleshooting, and maintenance of the loop emulator detection system to a maximum of ten Department personnel. Arrange for training to be conducted by the manufacturer's representative at an approved site within the Division responsible for administration of the project. Thirty days before conducting training submit a detailed course curriculum, draft manuals and materials, and resumes. Obtain approval of the

submittal before conducting the training. At least one week before beginning training, provide three sets of complete documentation necessary to maintain and operate the system. Do not perform training until installation of loop emulator detection systems is complete.

3.4. MEASUREMENT AND PAYMENT

Actual number of site surveys, arranged, conducted, and accepted.

Actual number of luminaire arms for video systems furnished, installed, and accepted.

Actual number of cameras with internal loop emulator processing units furnished, installed, and accepted.

Actual number of cameras without internal loop emulator processing units furnished, installed, and accepted.

Actual number of external loop emulator processing units furnished, installed, and accepted.

Actual number of camera sensor units relocated with detection zones reconfigured installed, and accepted.

No measurement will be made of video imaging loop emulator system support or training, power and video cables, and trenching as these items will be considered incidental to furnishing and installing video imaging loop emulator detection systems.

Payment will be made under:

Site Survey ..... Each
Camera without Internal Loop Emulator Processing Unit ..... Each
External Loop Emulator Processing Unit ..... Each

4. TRAFFIC SIGNAL SUPPORTS

4.1. METAL TRAFFIC SIGNAL SUPPORTS – ALL POLES

A. General:

Furnish and install metal strain poles and metal poles with mast arms, grounding systems, and all necessary hardware. The work covered by this special provision includes requirements for the design, fabrication, and installation of both standard and custom/site specifically designed metal traffic signal supports and associated foundations.

Provide metal traffic signal support systems that contain no guy assemblies, struts, or stay braces. Provide designs of completed assemblies with hardware that equals or exceeds AASHTO *Standard Specifications for Structural Supports for Highway Signs, Luminaires and Traffic Signals* 6th Edition, 2013 (hereafter called 6th Edition AASHTO), including the latest interim specifications. Provide assemblies with a round or near-round (18 sides or more) cross-section, or a multi sided cross section with no less than six sides. The sides may be straight, convex, or concave.

Pole heights shown on signal plans are estimated from available data for bid purposes. Prior to furnishing metal signal poles, use field measurements and adjusted cross-sections to determine whether pole heights are sufficient to obtain required clearances. If pole heights are not sufficient, the Contractor should immediately notify the Engineer of the required revised pole heights.

Ensure that metal signal poles permit cables to be installed inside poles and any required mast arms. For holes in the poles and arms used to accommodate cables, provide full-circumference

grommets. Arm flange plate wire access holes should be deburred, non grommeted, and oversized to fit around the 2" diameter grommeted shaft flange plate wire access hole.

After fabrication, have steel poles, required mast arms, and all parts used in the assembly hot-dip galvanized per section 1076. Design structural assemblies with weep holes large enough and properly located to drain molten zinc during the galvanization process. Provide hot-dip galvanizing on structures that meets or exceeds ASTM Standard A-123. Provide galvanizing on hardware that meets or exceeds ASTM Standard A-153. Ensure that threaded material is brushed and retapped as necessary after galvanizing. Perform repair of damaged galvanizing that complies with the following:

Repair of Galvanizing.....Article 1076-7

Standard Drawings for Metal Poles are available that supplement these project special provisions. These drawings are located on the Department's website:

https://connect.ncdot.gov/resources/safety/pages/ITS-Design-Resources.aspx

Comply with article 1098-1B of the *2012 STANDARD SPECIFICATIONS FOR ROADS & STRUCTURES*, hereinafter referred to as the *Standard Specifications* for submittal requirements. Furnish shop drawings for approval. Provide the copies of detailed shop drawings for each type of structure as summarized below. Ensure that shop drawings include material specifications for each component and identify welds by type and size on the detail drawing only, not in table format. **Do not release structures for fabrication until shop drawings have been approved by NCDOT**. Provide an itemized bill of materials for all structural components and associated connecting hardware on the drawings.

Comply with article 1098-1A of the *Standard Specifications* for Qualified Products List (QPL) submittals. All shop drawings must include project location description, signal inventory number(s) and a project number or work order number on the drawings.

Summary of information required for metal pole review submittal:

Item	Hardcopy Submittal	Electronic Submittal	Comments / Special Instructions
Sealed, Approved Signal Plan/Loading Diagram	1	1	All structure design information needs to reflect the latest approved signal plans
Custom Pole Shop Drawings	4 sets	1 set	Show NCDOT inventory number(s), contractor's name and relevant revision number in the title block. All drawings must have a unique drawing number for each project and identified for multiple pages.
Standard Pole Shop Drawings (from the QPL)	4 sets	1 set	Submit drawings on 11" x 17" format media. Show NCDOT inventory number(s), contractor's name and relevant revision number in the title block. All drawings must have a unique drawing number for each project and identified for multiple pages.
Structure Calculations	1 set	1 set	Not required for Standard QPL Poles

Standard Pole Foundation Drawings	1 set	1 set	Submit drawings on 11" x 17" format media. Submit a completed Standard Foundation Selection form for each pole using foundation table on Metal Pole Drawing M-8.
Custom Foundation Drawings	4 sets	1 set	Submit drawings on 11" x 17" format media. Show NCDOT inventory number(s), contractor's name and relevant revision number in the title block. All drawings must have a unique drawing number for each project and identified for multiple pages. If QPL Poles are used, include the corresponding QPL pole shop drawings with this submittal.
Foundation Calculations	1	1	**Submit copies of LPILE input, output and pile tip deflection graph per Section 11.4 of this specification for each foundation.** Not required for Standard QPL Poles
Soil Boring Logs and Report	1	1	Report should include a location plan and a soil classification report including soil capacity, water level, hammer efficiency, soil bearing pressure, soil density, etc. for each pole.

NOTE – All shop drawings and custom foundation design drawings must be sealed by a Professional Engineer licensed in the state of North Carolina. All geotechnical information must be sealed by either a Professional Engineer or geologist licensed in the state of North Carolina. Include a title block and revision block on the shop drawings and foundation drawings showing the NCDOT inventory number.

Shop drawings and foundation drawings may be submitted together or separately for approval. However, shop drawings must be approved before foundations can be reviewed. Foundation designs will be returned without review if the associated shop drawing has not been approved. Boring reports should include the following: Engineer's summary, boring location maps, soil classification per AASHTO Classification System, hammer efficiency, and Metal Pole Standard Foundation Selection Form. Incomplete submittals will be returned without review. The Reviewer has the right to request additional analysis and copies of the calculations to expedite the approval process.

B. Materials:

Fabricate metal pole and arm shaft from coil or plate steel to meet the requirements of ASTM A 595 Grade A tubes. For structural steel shapes, plates and bars use A572 Gr 50 min or ASTM A709 Gr 50 min. Provide pole and arm shafts that are round in cross section or multisided tubular shapes and have a uniform linear taper of 0.14 in/ft. Construct shafts from one piece of single ply plate or coil so there are no circumferential weld splices. Galvanize in accordance with AASHTO M 111 or an approved equivalent.

Use the submerged arc process or other NCDOT previously approved process suitable for pole shaft and arms to continuously weld pole shafts and arm shafts along their entire length. The longitudinal seam weld will be finished flush to the outside contour of the base metal. Ensure shafts have no circumferential welds except at the lower end joining the shaft to the pole base and arm base. Use full penetration groove welds with backing ring for all tube-to-transverse-plate connections in accordance with 6th Edition AASHTO. Provide welding that conforms to Article 1072-18 of the *Standard Specifications*, except that no field welding on any part of the pole will be permitted unless approved by a qualified engineer.

Refer to Metal Pole Standard Drawing Sheets M2 through M5 for fabrication details. Fabricate anchor bases and mast arm connecting plates from plate steel meeting, as a minimum, the requirements of ASTM A572 Gr 50, AASHTO M270 Gr 50, ASTM A709 Gr50, or an approved equivalent. Conform to the applicable bolt pattern and orientation as shown on Metal Pole Standard Drawing Sheet M2.

Ensure all hardware is galvanized steel or stainless steel. The Contractor is responsible for ensuring that the designer/fabricator specifies connecting hardware and/or materials that do not create a dissimilar metal corrosive reaction.

Provide a minimum of four (4) 1-1/2" diameter high strength bolts for connection between arm plate and pole plate. Increase number of bolts to six (6) 1-1/2" diameter high strength bolts when arm lengths are greater than 50’-0” long.

Unless otherwise required by the design, ensure each anchor rod is 2” diameter and 60” length. Provide 10” minimum thread projection at the top of the rod, and 8” minimum at the bottom of the rod. Use anchor rod assembly and drilled pier foundation materials that meet the *Foundations and Anchor Rod Assemblies for Metal Poles* provision.

For each structural bolt and other steel hardware, hot dip galvanizing shall conform to the requirements of AASHTO M 232 (ASTM A 153). Ensure end caps for poles or mast arms are constructed of cast aluminum conforming to Aluminum Alloy 356.0F.

Provide a circular anchor bolt lock plate that will be secured to the anchor bolts at the embedded end with 2 washers and 2 nuts. Provide a base plate template that matches the bolt circle diameter of the anchor bolt lock plate. Construct plates and templates from ¼” minimum thick steel with a minimum width of 4”. Galvanizing is not required for both plates.

Provide 4 heavy hex nuts and 4 flat washers for each anchor bolt. For nuts, use AASHTO M291 grade 2H, DH, or DH3 or equivalent material. For flat washers, use AASHTO M293 or equivalent material.

C. Construction Methods:

Erect signal support poles only after concrete has attained a minimum allowable compressive strength of 3000 psi. Install anchor rod assemblies in accordance with the *Foundations and Anchor Rod Assemblies for Metal Poles* provision.

For further construction methods, see construction methods for Metal Strain Pole, or Metal Pole with Mast Arm.

Connect poles to grounding electrodes and bond them to the electrical service grounding electrodes.

For holes in the poles used to accommodate cables, install grommets before wiring pole or arm. Do not cut or split grommets.

Attach the terminal compartment cover to the pole by a sturdy chain or cable. Ensure the chain or cable is long enough to permit the cover to hang clear of the compartment opening when the cover is removed, and is strong enough to prevent vandalism. Ensure the chain or cable will not interfere with service to the cables in the pole base.

Attach cap to pole with a sturdy chain or cable. Ensure the chain or cable is long enough to permit the cap to hang clear of the opening when the cap is removed.

Perform repair of damaged galvanizing that complies with the *Standard Specifications*, Article 1076-7 "Repair of Galvanizing."

Install galvanized wire mesh around the perimeter of the base plate to cover the gap between the base plate and top of foundation for debris and pest control.

Install a ¼" thick plate for concrete foundation tag to include: concrete grade, depth, diameter, and reinforcement sizes of the installed foundation.

4.2. METAL POLE UPRIGHTS (VERTICAL MEMBERS)

A. Materials:

- Provide tapered tubular shafts and fabricated of steel conforming to ASTM A-595 Grade A or an approved equivalent.
- Hot-dip galvanize poles in accordance with AASHTO M 111 or an approved equivalent.
- Have shafts that are continuously welded for the entire length by the submerged arc process, and with exposed welds ground or rolled smooth and flush with the base metal. Provide welding that conforms to Article 1072-18 of the *Standard Specification* except that no field welding on any part of the pole will be permitted.
- Have Shafts with no circumferential welds except at the lower end joining the shaft to the base.
- Have anchor bases for steel poles fabricated from plate steel meeting as a minimum the requirements of ASTM A572 Gr 50, AASHTO M270 Gr 50, ASTM A709 Gr 50, or an approved equivalent.

Provide a grounding lug(s) in the approximate vicinity of the messenger cable clamp for bonding and grounding messenger cable. Lugs must accept #4 or #6 AWG wire to bond messenger cables to the pole in order to provide an effective ground fault circuit path. Refer to Metal Pole Standard Drawing Sheet M6 for construction details.

Have poles permanently stamped above the hand holes with the identification tag details as shown on Metal Pole Standard Drawing Sheet M2.

Provide liquid tight flexible metal conduit (Type LFMC), liquid tight flexible nonmetallic conduit (Type LFNC), high density polyethylene conduit (Type HDPE), or approved equivalent to isolate conductors feeding luminaires.

Fabricate poles from a single piece of steel or aluminum with single line seam weld with no transverse butt welds. Fabrication of two ply pole shafts is unacceptable with the exception of fluted

shafts. Provide tapers for all shafts that begin at base and that have diameters which decrease uniformly at the rate of not more than 0.14 inch per foot (11.7 millimeters per meter) of length.

Provide four anchor nuts and four washers for each anchor bolt. Ensure that anchor bolts have required diameters, lengths, and positions, and will develop strengths comparable to their respective poles.

Provide a terminal compartment with cover and screws in each pole that encompasses the hand hole and contains a 12-terminal barrier type terminal block. Provide two terminal screws with a removable shorting bar between them for each termination. Furnish terminal compartment covers attached to the pole by a sturdy chain or cable approved by the Engineer. Ensure that the chain or cable is long enough to permit the cover to hang clear of the compartment opening when the cover is removed, and is strong enough to prevent vandals from being able to disconnect the cover from the pole. Ensure that the chain or cable will not interfere with service to the cables in the pole base.

Install grounding lugs that will accept #4 or #6 AWG wire to electrically bond messenger cables to the pole. Refer to Metal Pole Standard Drawing Sheet M6 for construction details.

For each pole, provide a 1/2 inch minimum thread diameter, coarse thread stud and nut for grounding which will accommodate #6 AWG ground wire. Ensure that the lug is electrically bonded to the pole and is conveniently located inside the pole at the hand hole.

Provide a removable pole cap with stainless steel attachment screws for the top of each pole. Ensure that the cap is cast aluminum conforming to Aluminum Association Alloy 356.0F. Furnish cap attached to the pole with a sturdy chain or cable approved by the Engineer. Ensure that the chain or cable is long enough to permit the cap to hang clear of the pole-top opening when the cap is removed.

When required by the plans, furnish couplings 42 inches above the bottom of the base for mounting of pedestrian pushbuttons. Provide mounting points consisting of 1-1/2 inch internally threaded half-couplings that comply with the NEC and that are mounted within the poles. Ensure that couplings are essentially flush with the outside surfaces of the poles and are installed before any required galvanizing. Provide a threaded plug in each mounting point. Ensure that the surface of the plug is essentially flush with the outer end of the mounting point when installed and has a recessed hole to accommodate a standard wrench.

1. STRAIN POLE SHAFTS

Provide 2 messenger cable (span wire) clamps and associated hardware for attachment of messenger cable. Ensure that diameter of the clamp is appropriate to its location on the pole and is appropriately designed to be adjustable from 1’-6” below the top, down to 6’-6” below the top of the pole. Do not attach more than one support cable to a messenger cable clamp.

Provide a minimum of three (3) 2 inch (50 mm) holes equipped with an associated coupling and weatherhead on the messenger cable load side of the pole to accommodate passage of signal cables from inside the pole. Provide galvanized threaded plugs for all unused couplings at pole entrance points. Refer to Metal Pole Standard Drawing Sheet M3 for fabrication details.

Ensure that allowable pole deflection does not exceed that allowed per 6th Edition AASHTO. Ensure maximum deflection at the top of the pole does not exceed 2.5 percent of the pole height.

2. MAST ARM POLE SHAFTS

Ensure that allowable pole deflection does not exceed that allowed per 6th Edition AASHTO. Ensure that maximum angular rotation of the top of the mast arm pole does not exceed 1 degree 40 minutes (1°40').

B. Construction Methods:

Install metal poles, hardware, and fittings as shown on the manufacturer's installation drawings. Install metal poles so that when the pole is fully loaded it is within 1 degree 40 minutes (1°40') of vertical. Install poles with the manufacturer's recommended "rake." Use threaded leveling nuts to establish rake if required.

4.3. MAST ARMS

Provide pole plates and associated gussets and fittings for attachment of required mast arms. As part of each mast arm attachment, provide a cable passage hole in the pole to allow passage of signal cables from the pole to the arm.

Ensure that allowable mast arm deflection does not exceed that allowed per 6th Edition AASHTO. Also when arm is fully loaded, tip of the arm shall not go below the arm attachment point with the pole for all load conditions per 6th Edition AASHTO.

Furnish all arm plates and necessary attachment hardware, including bolts and brackets.

Provide two extra bolts for each arm.

Provide grommet holes on the arms to accommodate cables for the signals.

Provide arms with weatherproof connections for attaching to the shaft of the pole.

Provide hardware that is galvanized steel, stainless steel, or corrosive-resistant aluminum.

Provide a removable end cap with stainless steel attachment screws for the end of each mast arm. Ensure that the cap is cast aluminum conforming to Aluminum Association Alloy 356.0F. Furnish cap attached to the arm with a sturdy chain or cable approved by the Engineer. Ensure that the chain or cable is long enough to permit the cap to hang clear of the arm end opening when the cap is removed.

Comply with the following for Steel Luminaire Arms:

- In addition to tapered tube, luminaire arms may be standard weight black steel pipe conforming to ASTM A 53-90a, Type E or Type S, Grade B or an approved equivalent.
- Conform to the welding requirements of the steel poles.
- After all fabricating, cutting, punching, and welding are completed, luminaire arms should be hot-dipped galvanized inside and outside.
- In accordance with the National Electrical Code (NEC) Article 230.2(E), provide identification of the electrical source provider for the luminaire feeder circuit with contact information on a permanent label located in the pole hand hole in the vicinity of the feeder circuit raceway.

A. Materials:

After all fabricating, cutting, punching, and welding are completed, hot-dip galvanize the structure in accordance with the AASHTO M 111 or an approved equivalent.

B. Construction Methods:

Install horizontal-type arms with sufficient manufactured rise to keep arm from deflecting below the arm attachment height.

Attach cap to the mast arm with a sturdy chain or cable. Ensure that the chain or cable is long enough to permit the cap to hang clear of the arm opening when the cap is removed.

For mast arm poles, use full penetration welds with back-up ring at the pole base and at the arm base connection.

4.4. DRILLED PIER FOUNDATIONS FOR METAL TRAFFIC SIGNAL POLES

Analysis procedures and formulas shall be based on AASHTO 6th Edition, latest ACI code and the *Drilled Shafts: Construction Procedures and Design Methods* FHWA-NHI-10-016 manual. Design methods based on engineering publications or research papers needs to have prior approval from NCDOT. The Department reserves the right to accept or disapprove any method used for the analysis.

Use a Factor of Safety of 1.33 for torsion and 2.0 for bending for the foundation design.

Foundation design for lateral load shall not exceed 1" lateral deflection at top of foundation.

For lateral analysis, use LPILE Plus V6.0 or later. Inputs, results and corresponding graphs are to be submitted with the design calculations.

Skin Friction is to be calculated using the α-method for cohesive soils and the β-method for cohesion-less soils (**Broms method will not be accepted**). Detailed descriptions of the "α" and "β" methods can be found in *FHWA-NHI-10-016*.

Omit first 2.5ft for cohesive soils when calculating skin friction.

When hammer efficiency is not provided, assume a value of 0.70.

Design all custom foundations to carry the maximum capacity of each metal pole. For standard case strain poles only, if a custom foundation is designed, use the actual shear, axial and moment reactions from the Standard Foundation Selection Table shown on Standard Drawing No. M8.

When poor soil conditions are encountered which could create an excessively large foundation design, consideration may be given to allowing an exemption to the maximum capacity design. The contractor must gain approval from the engineer before reducing a foundation's capacity. On projects where poor soil is known to be present, it is advisable that the contractor consider getting foundations approved before releasing poles for fabrication.

Have the contractor notify the engineer if the proposed foundation is to be installed on a slope other than 8H: 1V or flatter.

A. Description:

Furnish and install foundations for NCDOT metal poles with all necessary hardware in accordance with the plans and specifications.

Metal Pole Standards have been developed and implemented by NCDOT for use at signalized intersections in North Carolina. If the plans call for a standard pole, then a standard foundation may be selected from the plans. However, the Contractor is not required to use a standard foundation. If the Contractor chooses to design a non-standard site-specific foundation for a standard pole or if the plans call for a non-standard site-specific pole, design the foundation to conform to the applicable

provisions in the NCDOT Metal Pole Standard Drawings and Section B7 (Non-Standard Foundation Design) below. If non-standard site specific foundations are designed for standard QPL approved strain poles, the foundation designer must use the design moment specified by load case on Metal Pole Standard Drawing Sheet M8. Failure to conform to this requirement will be grounds for rejection of the design.

If the Contractor chooses to design a non-standard foundation for a standard pole and the soil test results indicate a standard foundation is feasible for the site, the Contractor will be paid the cost of the standard foundation (drilled pier and wing wall, if applicable). Any additional costs associated with a non-standard site-specific foundation including additional materials, labor and equipment will be considered incidental to the cost of the standard foundation. All costs for the non-standard foundation design will also be considered incidental to the cost of the standard foundation.

B. Soil Test and Foundation Determination:

1. General:

Drilled piers are reinforced concrete sections, cast-in-place against in situ, undisturbed material. Drilled piers are of straight shaft type and vertical.

Some standard drilled piers for supporting poles with mast arms may require wing walls to resist torsional rotation. Based upon this provision and the results of the required soil test, a drilled pier length and wing wall requirement may be determined and constructed in accordance with the plans.

For non-standard site-specific poles, the contractor-selected pole fabricator will determine if the addition of wing walls is necessary for the supporting foundations.

2. Soil Test:

Perform a soil test at each proposed metal pole location. Complete all required fill placement and excavation at each signal pole location to finished grade before drilling each boring. Soil tests performed that are not in compliance with this requirement may be rejected and will not be paid. Drill one boring to a depth of 26 feet within a 25 foot radius of each proposed foundation.

Perform standard penetration tests (SPT) in accordance with ASTM D 1586 at depths of 1, 2.5, 5, 7.5, 10, 15, 20 and 26 feet. Discontinue the boring if one of the following occurs:

- A total of 100 blows have been applied in any 2 consecutive 6-in. intervals.
- A total of 50 blows have been applied with < 3-in. penetration.

Describe each intersection as the "Intersection of (*Route or SR #*), *(Street Name)* and (*Route or SR #*), *(Street Name)*, _____ County, Signal Inventory No. _____". Label borings with "B- *N, S, E, W, NE, NW, SE or SW*" corresponding to the quadrant location within the intersection. Pole numbers should be made available to the Drill Contractor. Include pole numbers in the boring label if they are available. If they are not available, ensure the boring labels can be cross-referenced to corresponding pole numbers. For each boring, submit a legible (hand written or typed) boring log signed and sealed by a licensed Geologist or Professional Engineer registered in North Carolina. Include on each boring the SPT blow counts and N-values at each depth, depth of the boring, hammer efficiency, depth of water table and a general description of the soil types encountered using the AASHTO Classification System.

3. Standard Foundation Determination:

Use the following method for determining the Design N-value:

$$N_{AVG} = \frac{(N@1' + N@2.5' + \ldots\ldots\ldots N@\text{Deepest Boring Depth})}{\text{Total Number of N-values}}$$

$$Y = (N@1')^2 + (N@2.5')^2 + \ldots\ldots\ldots (N@\text{Deepest Boring Depth})^2$$

$$Z = (N@1' + N@2.5' + \ldots\ldots\ldots N@\text{Deepest Boring Depth})$$

$$N_{STD\ DEV} = \left(\frac{(\text{Total Number of N-values} \times Y) - Z^2}{(\text{Total Number of N-values}) \times (\text{Total Number of N-values} - 1)} \right)^{0.5}$$

Design N-value equals lesser of the following two conditions:

$N_{AVG} - (N_{STD\ DEV} \times 0.45)$

Or

$$\text{Average of First Four N-Values} = \frac{(N@1' + N@2.5' + N@5' + N@7.5')}{4}$$

Note: If less than 4 N-values are obtained because of criteria listed in Section 2 above, use average of N-values collected for second condition. Do not include the N-value at the deepest boring depth for above calculations if the boring is discontinued at or before the required boring depth because of criteria listed in Section 2 above. Use N-value of zero for weight of hammer or weight of rod. If N-value is greater than 50, reduce N-value to 50 for calculations.

If standard NCDOT strain poles are shown on the plans and the Contractor chooses to use standard foundations, determine a drilled pier length, "L," for each signal pole from the Standard Foundations Chart (sheet M 8) based on the Design N-value and the predominant soil type. For each standard pole location, submit a completed "Metal Pole Standard Foundation Selection Form" signed by the Contractor's representative. Signature on form is for verification purposes only. Include the Design N-value calculation and resulting drilled pier length, "L," on each form.

If non-standard site-specific poles are shown on the plans, submit completed boring logs collected in accordance with Section 2 (Soil Test) above along with pole loading diagrams from the plans to the contractor-selected pole fabricator to assist in the pole and foundation design.

If one of the following occurs, the Standard Foundations Chart shown on the plans may not be used and a non-standard foundation may be required. In such case, contact the Engineer.

- The Design N-value is less than 4.
- The drilled pier length, "L", determined from the Standard Foundations Chart, is greater than the depth of the corresponding boring.

In the case where a standard foundation cannot be used, the Department will be responsible for the additional cost of the non-standard foundation.

Foundation designs are based on level ground around the traffic signal pole. If the slope around the edge of the drilled pier is steeper than 8:1 (H:V) or the proposed foundation will be less than 10 feet from the top of an embankment slope, the Contractor is responsible for providing slope information to the foundation designer and to the Engineer so it can be considered in the design.

The "Metal Pole Standard Foundation Selection Form" may be found at:

http://www.ncdot.gov/doh/preconstruct/highway/geotech/formdet/misc/MetalPole.pdf

If assistance is needed, contact the Engineer.

4. Non-Standard Foundation Design:

Design non-standard foundations based upon site-specific soil test information collected in accordance with Section 2 (Soil Test) above. Design drilled piers for side resistance only in accordance with Section 4.6 of the *AASHTO Standard Specifications for Highway Bridges*. Use the computer software LPILE version-6.0 or later manufactured by Ensoft, Inc. to analyze drilled piers. Use the computer software gINT V8i or later manufactured by Bentley Systems, Inc. with the current NCDOT gINT library and data template to produce SPT boring logs. Provide a drilled pier foundation for each pole with a length and diameter that result in a horizontal lateral movement of less than 1 inch at the top of the pier and a horizontal rotational movement of less than 1 inch at the edge of the pier. Contact the Engineer for pole loading diagrams for standard poles to be used for non-standard foundation designs. Submit any non-standard foundation designs including drawings, calculations, and soil boring logs to the Engineer for review and approval before construction.

C. Drilled Pier Construction:

Construct drilled pier foundations in accordance with the *Foundations and Anchor Rod Assemblies for Metal Poles* provision.

4.5. CUSTOM DESIGN OF TRAFFIC SIGNAL SUPPORTS

A. General:

Design traffic signal supports with foundations consisting of metal strain poles or metal poles with mast arms.

The lengths of the metal signal poles shown on the plans are estimated from available data for bid purposes. Determine the actual length of each pole from field measurements and adjusted cross-sections. Furnish the revised pole heights to the Engineer. Use all other dimensional requirements shown on the plans.

Ensure each pole includes an identification tag with information and location positions as defined on Metal Pole Standard Drawing Sheets M2, M3 and M4. All pole shaft tags must include the NCDOT Inventory number followed by the pole number shown on the traffic signal or ITS (non-signalized locations) plan.

Design all traffic signal support structures using the following 6th Edition AASHTO specifications:

- Design for a 50 year service life as recommended by Table 3.8.3-2.
- Use the wind pressure map developed from 3-second gust speeds, as provided in Article 3.8.

- Ensure signal support structures include natural wind gust loading and truck-induced gust loading in the fatigue design, as provided for in Articles 11.7.1.2 and 11.7.1.3, respectively. Designs need not consider periodic galloping forces.
- Assume the natural wind gust speed in North Carolina is 11.2 mph. For natural wind fatigue stress calculations, utilize a drag coefficient (C_d) computed for 11.2 mph wind velocity and not the basic wind speed velocity.
- Design for Category II fatigue, as provided for in Article 11.6, unless otherwise specified.
- Calculate all stresses using applicable equations from Section 5. The Maximum allowable stress ratios for all signal support designs are 0.9.
- Conform to article 10.4.2 and 11.8 for all deflection requirements.

Ensure that the design permits cables to be installed inside poles and mast arms.

Unless otherwise specified by special loading criteria, the computed surface area for ice load on signal heads is:

- 3-section, 12-inch, Surface area: 26.0 ft^2 (17.0 ft^2 without back plate)
- 4-section, 12-inch, Surface area: 32.0 ft^2 (21.0 ft^2 without back plate)
- 5-section, 12-inch, Surface area: 42.0 ft^2 (29.0 ft^2 without back plate)

The ice loading for signal heads defined above includes the additional surface area that back plates will induce. Special loading criteria may be specified in instances where back plates will not be installed on signal heads. Refer to the Loading Schedule on each Metal Pole Loading Diagram for revised signal head surface areas. The pole designer should revise ice loads accordingly in this instance. Careful examination of the plans when this is specified is important as this may impact sizing of the metal support structure and foundation design which could affect proposed bid quotes. All maximum stress ratios of 0.9 still apply.

Assume the combined minimum weight of a messenger cable bundle (including messenger cable, signal cable and detector lead-in cables) is 1.3 lbs/ft. Assume the combined minimum diameter of this cable bundle is 1.3 inches.

Ensure that designs provide a removable pole cap with stainless steel attachment screws for each pole top and mast arm end.

B. Metal Poles:

Submit design drawings for approval including pre-approved QPL pole drawings. Show all the necessary details and calculations for the metal poles including the foundation and connections. Include NCDOT inventory number on design drawings. Include as part of the design calculations the ASTM specification numbers for the materials to be used. Provide the types and sizes of welds on the design drawings. Include a Bill of Materials on design drawings. Ensure design drawings and calculations are signed, dated, and sealed by the responsible professional engineer licensed in the state of North Carolina. Immediately bring to the attention of the Engineer any structural deficiency that becomes apparent in any assembly or member of any assembly as a result of the design requirements imposed by these specifications, the plans, or the typical drawings. Said Professional Engineer is wholly responsible for the design of all poles and arms. Review and acceptance of these

designs by the Department does not relieve the said Professional Engineer of his responsibility. **Do not fabricate the assemblies until receipt of the Department's approval of the design drawings.**

For mast arm poles, provide designs with provisions for pole plates and associated gussets and fittings for mast arm attachment. As part of each mast arm attachment, provide a grommeted 2" diameter hole on the shaft side of the connection to allow passage of the signal cables from the pole to the arm.

Where ice is present, assume wind loads as shown in Figure 3.9.4.2-3 of the 6th Edition AASHTO Specification for Group III loading.

For each strain pole, provide two messenger cable clamps and associated hardware to attach the messenger support cable. Ensure that the diameter of the clamps is appropriately designed to be adjustable from 1'-6" inches below the top, down to 6'-6" below the top of the pole. Do not attach more than one messenger support cable to a messenger cable clamp.

Provide a grounding lug(s) in the approximate vicinity of the messenger cable clamp for bonding and grounding messenger cable. Lugs must accept #4 or #6 AWG wire to bond messenger cables to the pole in order to provide an effective ground fault circuit path. Refer to Metal Pole Standard Drawing Sheet M6 for construction details.

Design tapers for all pole shafts that begin at the base with diameters that decrease uniformly at the rate of 0.14 inch per foot of length.

Design a base plate on each pole. The minimum base plate thickness for all poles is determined by the following criteria:

Case 1 Circular or rectangular solid base plate with the upright pole welded to the top surface of base plate with full penetration butt weld, and where no stiffeners are provided. A base plate with a small center hole, which is less than 1/3 of the upright diameter, and located concentrically with the upright pole, may be considered as a solid base plate.

The magnitude of bending moment in the base plate, induced by the anchoring force of each anchor bolt is $M = (P \times D_1) / 2$, where

M = bending moment at the critical section of the base plate induced by one anchor bolt

P = anchoring force of each anchor bolt

D_1 = horizontal distance between the anchor bolt center and the outer face of the upright, or the difference between the bolt circle radius and the outside radius of the upright

Locate the critical section at the face of the anchor bolt and perpendicular to the bolt circle radius. The overlapped part of two adjacent critical sections is considered ineffective.

Case 2 Circular or rectangular base plate with the upright pole socketed into and attached to the base plate with two lines of fillet weld, and where no stiffeners are provided, or any base plate with a center hole that is larger in diameter than 1/3 of the upright diameter.

The magnitude of bending moment induced by the anchoring force of each anchor bolt is $M = P \times D_2$,

where P = anchoring force of each anchor bolt

D_2 = horizontal distance between the face of the upright and the face of the anchor bolt nut

Locate the critical section at the face of the anchor bolt top nut and perpendicular to the radius of the bolt circle. The overlapped part of two adjacent critical sections is considered ineffective.

If the base plate thickness calculated for Case 2 is less than Case 1, use the thickness calculated for Case 1.

The following additional owner requirements apply concerning pole base plates.

- Ensure that whichever case governs as defined above, the anchor bolt diameter is set to match the base plate thickness. If the minimum diameter required for the anchor bolt exceeds the thickness required for the base plate, set the base plate thickness equal to the required bolt diameter.
- For dual mast arm supports, or for single mast arm supports 50’ or greater, use a minimum 8 bolt orientation with 2” diameter anchor bolts, and a 2” thick base plate.
- For all metal poles with mast arms, use a full penetration groove weld with a backing ring to connect the pole upright component to the base. Refer to Metal Pole Standard Drawing Sheet M4.

Ensure that designs have anchor bolt holes with a diameter 1/4 inch larger than the anchor bolt diameters in the base plate.

Ensure that the anchor bolts have the required diameters, lengths, and positions, and will develop strengths comparable to their respective poles.

Provide designs with a 6 x 12-inch hand hole with a reinforcing frame for each pole.

Provide designs with a terminal compartment with cover and screws in each pole that encompasses the hand hole and contains provisions for a 12-terminal barrier type terminal block.

For each pole, provide designs with provisions for a 1/2 inch minimum thread diameter, coarse thread stud and nut for grounding which will accommodate a #6 AWG ground wire. Ensure the lug is electrically bonded to the pole and is conveniently located inside the pole at the hand hole.

When required, design couplings on the pole for mounting pedestrian pushbuttons at a height of 42 inches above the bottom of the base. Provide mounting points consisting of 1-1/2 inch internally threaded half-couplings that comply with the NEC that are mounted within the poles. Ensure the couplings are essentially flush with the outside surfaces of the poles and are installed before any required galvanizing. Provide a threaded plug for each half coupling. Ensure that the surface of the plug is essentially flush with the outer end of the mounting point when installed and has a recessed hole to accommodate a standard wrench.

C. Mast Arms:

Design all arm plates and necessary attachment hardware, including bolts and brackets as required by the plans.

Design for grommeted holes on the arms to accommodate the cables for the signals if specified.

Design arms with weatherproof connections for attaching to the shaft of the pole.

Always use a full penetration groove weld with a backing ring to connect the mast arm to the pole. Refer to Metal Pole Standard Drawing Sheet M5.

Capacity of tapped flange plate must be sufficient to develop the full capacity of the connecting bolts. In all cases the flange plate of both arm and shaft must be at least as thick as the arm connecting bolts are in diameter.

4.6. POLE NUMBERING SYSTEM

A. New Poles

Attach an identification tag to each pole shaft and mast arm section as shown on Metal Pole Standard Drawing Sheet M2 "Typical Fabrication Details Common To All Metal Poles".

B. Reused Poles

Do not remove the original identification tag(s) from the pole shaft and/or mast arm sections. Add a new identification tag based on the new location for any reused poles and/or mast arms.

4.7. REUSED POLE SHAFTS AND/OR MAST ARMS

Provide shop drawings along with new foundation designs for review and approval prior to furnishing and/or installing any reused metal poles and/or mast arms. Use the same requirements as specified for new materials as stated above in these Special Provisions.

For reused pole shaft and mast arm combinations, it is preferable to use the original shafts and arms that were used together at the time of original installation.

4.8. MEASUREMENT AND PAYMENT

Actual number of metal strain signal poles (without regard to height or load capacity) furnished, installed and accepted.

Actual number of metal poles with single mast arms furnished, installed, and accepted.

Actual number of metal poles with dual mast arms furnished, installed, and accepted.

Actual number of reused metal strain signal poles (without regard to height or load capacity) furnished, installed and accepted.

Actual number of reused metal strain signal poles (without regard to height or load capacity) installed and accepted.

Actual number of reused metal poles with single mast arms furnished, installed, and accepted.

Actual number of reused metal poles with single mast arms installed and accepted.

Actual number of reused metal poles with dual mast arms furnished, installed, and accepted.

Actual number of reused metal poles with dual mast arms installed and accepted.

Actual number of soil tests with SPT borings drilled furnished and accepted.

Actual volume of concrete poured in cubic yards of drilled pier foundation furnished, installed and accepted.

Actual number of foundations with wing walls furnished, installed and accepted, excluding foundation length. Refer to method of measurement above for drilled pier foundation.

Actual number of designs for metal strain poles furnished and accepted.

Actual number of designs for mast arms with metal poles furnished and accepted.

Actual number of metal signal pole foundations removed and disposed.

Actual number of metal signal poles removed and disposed.

No measurement will be made for foundation designs prepared with metal pole designs, as these will be considered incidental to designing signal support structures.

Payment will be made under:

Metal Pole with Single Mast Arm .....Each
Soil Test .....Each
Drilled Pier Foundation.....Cubic Yard
Mast Arm with Metal Pole Design .....Each

5. CONTROLLERS WITH CABINETS

5.1.MATERIALS – GENERAL CABINETS

Provide a moisture resistant coating on all circuit boards.

Provide one 20 mm diameter radial lead UL-recognized metal oxide varistor (MOV) between each load switch field terminal and equipment ground. Electrical performance is outlined below.

PROPERTIES OF MOV SURGE PROTECTOR	
Maximum Continuous Applied Voltage at 185° F	150 VAC (RMS) 200 VDC
Maximum Peak 8x20µs Current at 185° F	6500 A
Maximum Energy Rating at 185° F	80 J
Voltage Range 1 mA DC Test at 77° F	212-268 V
Max. Clamping Voltage 8x20µs, 100A at 77° F	395 V
Typical Capacitance (1 MHz) at 77° F	1600 pF

Provide a power line surge protector that is a two-stage device that will allow connection of the radio frequency interference filter between the stages of the device. Ensure that a maximum continuous current is at least 10A at 120V. Ensure that the device can withstand a minimum of 20 peak surge current occurrences at 20,000A for an 8x20 microsecond waveform. Provide a maximum clamp voltage of 395V at 20,000A with a nominal series inductance of 200µh. Ensure that the voltage does not exceed 395V. Provide devices that comply with the following:

Frequency (Hz)	Minimum Insertion Loss (dB)
60	0
10,000	30
50,000	55
100,000	50
500,000	50
2,000,000	60
5,000,000	40
10,000,000	20
20,000,000	25

5.2. MATERIALS – TYPE 170E CABINETS

A. Type 170 E Cabinets General:

Conform to the city of Los Angeles' Specification No. 54-053-08, *Traffic Signal Cabinet Assembly Specification* (dated July 2008), except as required herein.

Furnish model 336S pole mounted cabinets configured for 8 vehicle phases, 4 pedestrian phases, and 6 overlaps. Do not reassign load switches to accommodate overlaps unless shown on electrical details. Provide 336S pole mounted cabinets that are 46" high with 40" high internal rack assemblies.

Furnish model 332 base mounted cabinets configured for 8 vehicle phases, 4 pedestrian phases, and 6 overlaps. When overlaps are required, provide auxiliary output files for the overlaps. Do not reassign load switches to accommodate overlaps unless shown on electrical details.

Provide model 200 load switches, model 222 loop detector sensors, model 252 AC isolators, and model 242 DC isolators according to the electrical details. As a minimum, provide one (1) model 2018 conflict monitor, one (1) model 206L power supply unit, two (2) model 204 flashers, one (1) DC isolator (located in slot I14), and four (4) model 430 flash transfer relays (provide seven (7) model 430 flash transfer relays if auxiliary output file is installed) with each cabinet.

B. Type 170 E Cabinet Electrical Requirements:

Provide a cabinet assembly designed to ensure that upon leaving any cabinet switch or conflict monitor initiated flashing operation, the controller starts up in the programmed start up phases and start up interval.

Furnish two sets of non-fading cabinet wiring diagrams and schematics in a paper envelope or container and placed in the cabinet drawer.

All AC+ power is subject to radio frequency signal suppression.

Provide surge suppression in the cabinet for each type of cabinet device. Provide surge protection for the full capacity of the cabinet input file. Provide surge suppression devices that

operate properly over a temperature range of -40º F to +185º F. Ensure the surge suppression devices provide both common and differential modes of protection.

Provide a pluggable power line surge protector that is installed on the back of the PDA (power distribution assembly) chassis to filter and absorb power line noise and switching transients. Ensure the device incorporates LEDs for failure indication and provides a dry relay contact closure for the purpose of remote sensing. Ensure the device meets the following specifications:

Peak Surge Current (Single pulse, 8x20µs)……..20,000A

Occurrences (8x20µs waveform)……..10 minimum @ 20,000A

Maximum Clamp Voltage…….395VAC

Operating Current……..15 amps

Response Time……..< 5 nanoseconds

Provide a loop surge suppressor for each set of loop terminals in the cabinet. Ensure the device meets the following specifications:

Peak Surge Current (6 times, 8x20µs)

(Differential Mode)…….400A

(Common Mode)……1,000A

Occurrences (8x20µs waveform)……..500 min @ 200A

Maximum Clamp Voltage

(Differential Mode @400A)……35V

(Common Mode @1,000A)…….35V

Response Time……..< 5 nanoseconds

Maximum Capacitance……..35 pF

Provide a data communications surge suppressor for each communications line entering or leaving the cabinet. Ensure the device meets the following specifications:

Peak Surge Current (Single pulse, 8x20µs)……..10,000A

Occurrences (8x20µs waveform)……..100 min @ 2,000A

Maximum Clamp Voltage…….Rated for equipment protected

Response Time……..< 1 nanosecond

Maximum Capacitance…….1,500 pF

Maximum Series Resistance…….15Ω

Provide a DC signal surge suppressor for each DC input channel in the cabinet. Ensure the device meets the following specifications:

Peak Surge Current (Single pulse, 8x20µs)……..10,000A

Occurrences (8x20µs waveform)……..100 @ 2,000A

Maximum Clamp Voltage…….30V

Response Time……..< 1 nanosecond

Provide a 120 VAC signal surge suppressor for each AC+ interconnect signal input. Ensure the device meets the following specifications:

Peak Surge Current (Single pulse, 8x20µs)……..20,000A

Maximum Clamp Voltage…….350VAC

Response Time……..< 200 nanoseconds

Discharge Voltage……<200 Volts @ 1,000A

Insulation Resistance……≥100 MΩ

Provide conductors for surge protection wiring that are of sufficient size (ampacity) to withstand maximum overcurrents which could occur before protective device thresholds are attained and current flow is interrupted.

If additional surge protected power outlets are needed to accommodate fiber transceivers, modems, etc., install a UL listed, industrial, heavy-duty type power outlet strip with a minimum rating of 15 A / 125 VAC, 60 Hz. Provide a strip that has a minimum of 3 grounded outlets. Ensure the power outlet strip plugs into one of the controller unit receptacles located on the rear of the PDA. Ensure power outlet strip is mounted securely; provide strain relief if necessary.

Provide a door switch in the front and a door switch in the rear of the cabinet that will provide the controller unit with a Door Ajar alarm when either the front or the rear door is open. Ensure the door switches apply DC ground to the Input File when either the front door or the rear door is open.

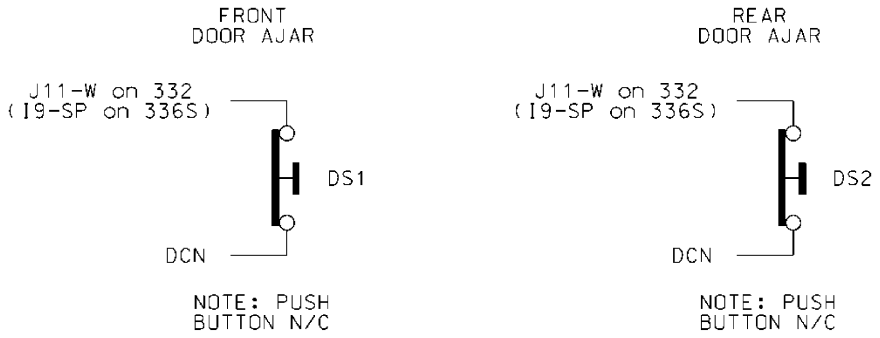

Furnish a fluorescent fixture in the rear across the top of the cabinet and another fluorescent fixture in the front across the top of the cabinet at a minimum. Ensure that the fixtures provide sufficient light to illuminate all terminals, labels, switches, and devices in the cabinet. Conveniently locate the fixtures so as not to interfere with a technician's ability to perform work on any devices or terminals in the cabinet. Provide a protective diffuser to cover exposed bulbs. Install 16 watt T-4 lamps in the fluorescent fixtures. Provide a door switch to provide power to each fixture when the respective door is open. Wire the fluorescent fixtures to the 15 amp ECB (equipment circuit breaker).

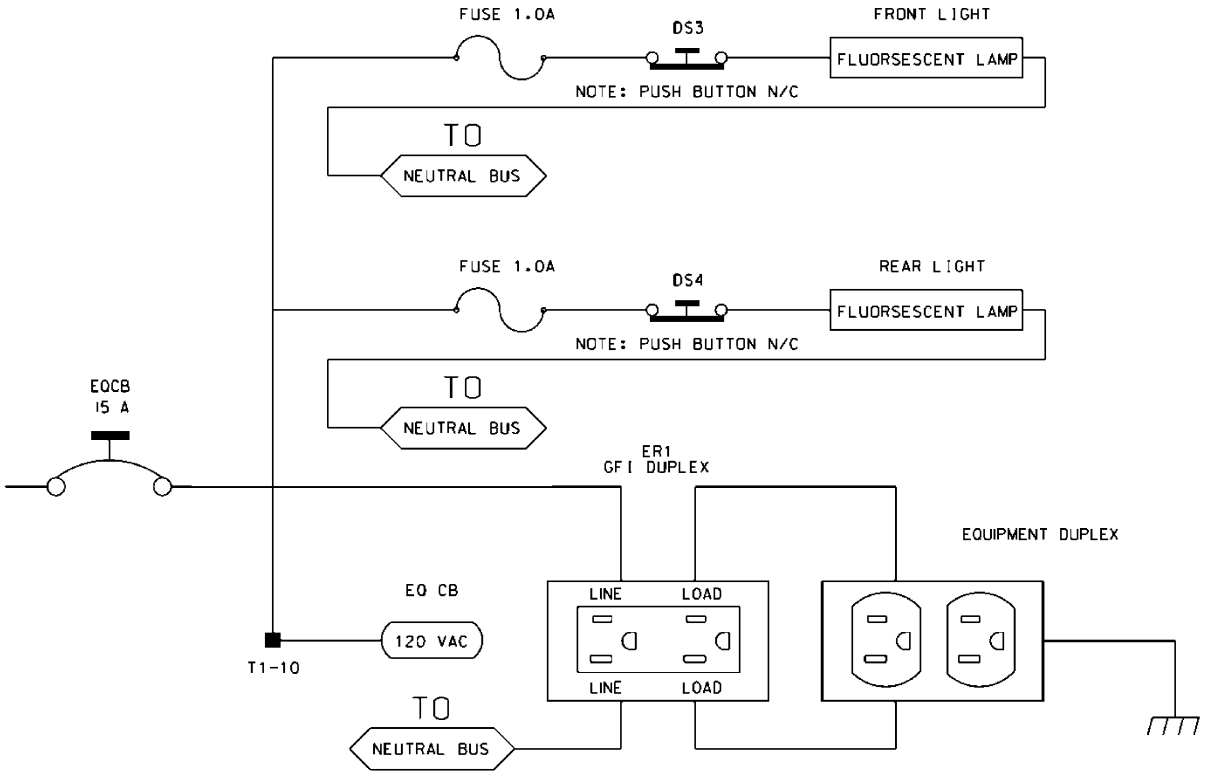

Furnish a police panel with a police panel door. For model 336S cabinets, mount the police panel on the rear door. Ensure that the police panel door permits access to the police panel when the main door is closed. Ensure that no rainwater can enter the cabinet even with the police panel door open. Provide a police panel door hinged on the right side as viewed from the front. Provide a police panel

door lock that is keyed to a standard police/fire call box key. In addition to the requirements of LA Specification No. 54-053-08, provide the police panel with a toggle switch connected to switch the intersection operation between normal stop-and-go operation (AUTO) and manual operation (MANUAL). Ensure that manual control can be implemented using inputs and software such that the controller provides full programmed clearance times for the yellow clearance and red clearance for each phase while under manual control.

Provide a 1/4-inch locking phone jack in the police panel for a hand control to manually control the intersection. Provide sufficient room in the police panel for storage of a hand control and cord.

Ensure the 336S cabinet Input File is wired as follows:

336S Cabinet

Port-Bit/C-1 Pin Assignment

Slot #	1	2	3	4	5	6	7	8	9	10	11	12	13	14
C-1 (Spares)	59	60	61	62	63	64	65	66	75	76	77	78	79	80
Port	3-2	1-1	3-4	1-3	3-1	1-2	3-3	1-4	2-5	5-5	5-6	5-1	5-2	6-7
C-1	56	39	58	41	55	40	57	42	51	71	72	67	68	81
Port	2-1	1-5	2-3	1-7	2-2	1-6	2-4	1-8	2-6	5-7	5-8	5-3	5-4	6-8
C-1	47	43	49	45	48	44	50	46	52	73	74	69	70	82

For model 332 base mounted cabinets, ensure terminals J14-E and J14-K are wired together on the rear of the Input File. Connect TB9-12 (J14 Common) on the Input Panel to T1-2 (AC-) on the rear of the PDA.

Provide detector test switches mounted at the top of the cabinet rack or other convenient location which may be used to place a call on each of eight phases based on the chart below. Provide three positions for each switch: On (place call), Off (normal detector operation), and Momentary On (place momentary call and return to normal detector operation after switch is released). Ensure that the switches are located such that the technician can read the controller display and observe the intersection.

Connect detector test switches for cabinets as follows:

336S Cabinet		332 Cabinet	
Detector Call Switches	**Terminals**	**Detector Call Switches**	**Terminals**
Phase 1	I1-F	Phase 1	I1-W
Phase 2	I2-F	Phase 2	I4-W
Phase 3	I3-F	Phase 3	I5-W
Phase 4	I4-F	Phase 4	I8-W
Phase 5	I5-F	Phase 5	J1-W
Phase 6	I6-F	Phase 6	J4-W
Phase 7	I7-F	Phase 7	J5-W
Phase 8	I8-F	Phase 8	J8-W

Provide the PCB 28/56 connector for the conflict monitor unit (CMU) with 28 independent contacts per side, dual-sided with 0.156 inch contact centers. Provide the PCB 28/56 connector contacts with solder eyelet terminations. Ensure all connections to the PCB 28/56 connector are soldered to the solder eyelet terminations.

Ensure that all cabinets have the CMU connector wired according to the 332 cabinet connector pin assignments (include all wires for auxiliary output file connection). Wire pins 13, 16, R, and U of the CMU connector to a separate 4 pin plug, P1, as shown below. Provide a second plug, P2, which will mate with P1 and is wired to the auxiliary output file as shown below. Provide an additional plug, P3, which will mate with P1 and is wired to the pedestrian yellow circuits as shown below. When no auxiliary output file is installed in the cabinet, provide wires for the green and yellow inputs for channels 11, 12, 17, and 18, the red inputs for channels 17 and 18, and the wires for the P2 plug. Terminate the two-foot wires with ring type lugs, insulated, and bundled for optional use.

	P1		P2		P3	
PIN	**FUNCTION**	**CONN TO**	**FUNCTION**	**CONN TO**	**FUNCTION**	**CONN TO**
1	CH-9G	CMU-13	OLA-GRN	A123	2P-YEL	114
2	CH-9Y	CMU-16	OLA-YEL	A122	4P-YEL	105
3	CH-10G	CMU-R	OLB-GRN	A126	6P-YEL	120
4	CH-10Y	CMU-U	OLB-YEL	A125	8P-YEL	111

Do not provide the P20 terminal assembly (red monitor board) or red interface ribbon cable as specified in LA Specification No. 54-053-08.

Provide a P20 connector that mates with and is compatible with the red interface connector mounted on the front of the conflict monitor. Ensure that the P20 connector and the red interface

connector on the conflict monitor are center polarized to ensure proper connection. Ensure that removal of the P20 connector will cause the conflict monitor to recognize a latching fault condition and place the cabinet into flashing operation.

Wire the P20 connector to the output file and auxiliary output file using 22 AWG stranded wires. Ensure the length of these wires is a minimum of 42 inches in length. Provide a durable braided sleeve around the wires to organize and protect the wires.

Wire the P20 connector to the traffic signal red displays to provide inputs to the conflict monitor as shown below. Ensure the pedestrian Don't Walk circuits are wired to channels 13 through 16 of the P20 connector. When no auxiliary output file is installed in the cabinet, provide wires for channels 9 through 12 reds. Provide a wire for special function 1. Terminate the unused wires with ring type lugs, insulated, and bundled for optional use.

	P20 Connector				
PIN	**FUNCTION**	**CONN TO**	**PIN**	**FUNCTION**	**CONN TO**
1	Channel 15 Red	119	2	Channel 16 Red	110
3	Channel 14 Red	104	4	Chassis GND	01-9
5	Channel 13 Red	113	6	N/C	
7	Channel 12 Red	AUX 101	8	Spec Function 1	
9	Channel 10 Red	AUX 124	10	Channel 11 Red	AUX 114
11	Channel 9 Red	AUX 121	12	Channel 8 Red	107
13	Channel 7 Red	122	14	Channel 6 Red	134
15	Channel 5 Red	131	16	Channel 4 Red	101
17	Channel 3 Red	116	18	Channel 2 Red	128
19	Channel 1 Red	125	20	Red Enable	01-14

Ensure the controller unit outputs to the auxiliary output file are pre-wired to the C5 connector. When no auxiliary output file is installed in the cabinet, connect the C5 connector to a storage socket located on the Input Panel or on the rear of the PDA.

Do not wire pin 12 of the load switch sockets.

In addition to the requirements of LA Specification No. 54-053-08, ensure relay K1 on the Power Distribution Assembly (PDA) is a four pole relay and K2 on the PDA is a two pole relay.

Provide a two pole, ganged circuit breaker for the flash bus circuit. Ensure the flash bus circuit breaker is an inverse time circuit breaker rated for 10 amps at 120 VAC with a minimum of 10,000 RMS symmetrical amperes short circuit current rating. Do not provide the auxiliary switch feature on the flash bus circuit breaker. Ensure the ganged flash bus circuit breaker is certified by the circuit breaker manufacturer to provide gang tripping operation.

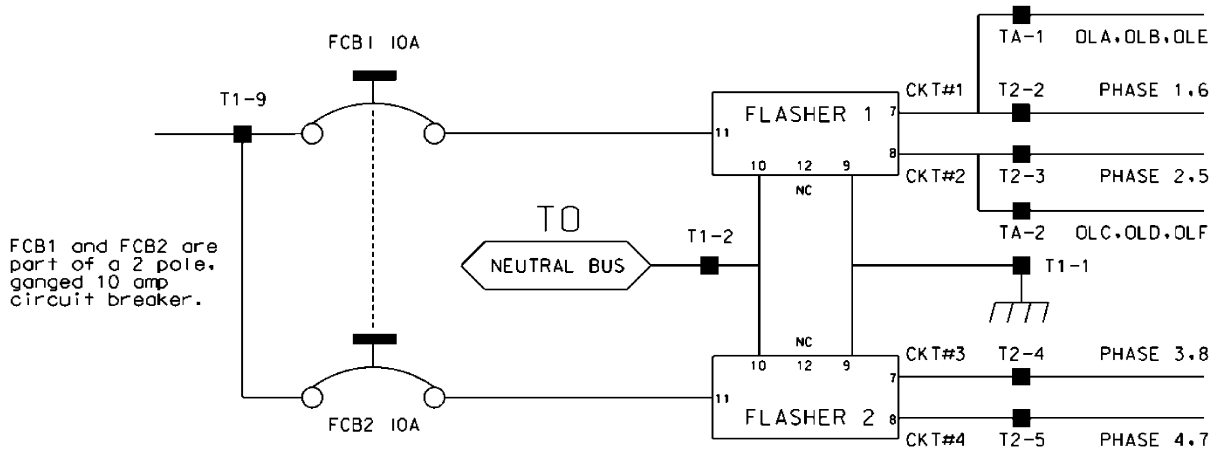

Ensure auxiliary output files are wired as follows:

AUXILIARY OUTPUT FILE TERMINAL BLOCK TA ASSIGNMENTS	
POSITION	**FUNCTION**
1	Flasher Unit #1, Circuit 1/FTR1 (OLA, OLB)/FTR3 (OLE)
2	Flasher Unit #1, Circuit 2/FTR2 (OLC, OLD)/FTR3 (OLF)
3	Flash Transfer Relay Coils
4	AC -
5	Power Circuit 5
6	Power Circuit 5
7	Equipment Ground Bus
8	NC

Provide four spare load resistors mounted in each cabinet. Ensure each load resistor is rated as shown in the table below. Wire one side of each load resistor to AC-. Connect the other side of each resistor to a separate terminal on a four (4) position terminal block. Mount the load resistors and terminal block either inside the back of Output File No. 1 or on the upper area of the Service Panel.

ACCEPTABLE LOAD RESISTOR VALUES	
VALUE (ohms)	**WATTAGE**
1.5K – 1.9 K	25W (min)
2.0K – 3.0K	10W (min)

Provide Model 200 load switches, Model 204 flashers, Model 242 DC isolators, Model 252 AC isolators, and Model 206L power supply units that conform to CALTRANS' "*Transportation Electrical Equipment Specifications*" dated March 12, 2009 with Erratum 1.

C. Type 170 E Cabinet Physical Requirements:

Do not mold, cast, or scribe the name "City of Los Angeles" on the outside of the cabinet door as specified in LA Specification No. 54-053-08. Do not provide a Communications Terminal Panel as specified in LA Specification No. 54-053-08. Do not provide terminal block TBB on the Service Panel. Do not provide Cabinet Verification Test Program software or associated test jigs as specified in LA Specification No. 54-053-08.

Furnish unpainted, natural, aluminum cabinet shells. Ensure that all non-aluminum hardware on the cabinet is stainless steel or a Department approved non-corrosive alternate.

Ensure the lifting eyes, gasket channels, police panel, and all supports welded to the enclosure and doors are fabricated from 0.125 inch minimum thickness aluminum sheet and meet the same standards as the cabinet and doors.

Provide front and rear doors with latching handles that allow padlocking in the closed position. Furnish 0.75 inch minimum diameter stainless steel handles with a minimum 0.5 inch shank. Place the padlocking attachment at 4.0 inches from the handle shank center to clear the lock and key. Provide an additional 4.0 inches minimum gripping length.

Provide Corbin #2 locks on the front and rear doors. Provide one (1) Corbin #2 and one (1) police master key with each cabinet. Ensure main door locks allow removal of keys in the locked position only.

Provide a surge protection panel with 16 loop surge protection devices and designed to allow sufficient free space for wire connection/disconnection and surge protection device replacement. For model 332 cabinets, provide an additional 20 loop surge protection devices. Provide an additional two AC+ interconnect surge devices to protect one slot and eight DC surge protection devices to protect four slots. Provide no protection devices on slot I14.

For pole mounted cabinets, mount surge protection devices for the AC+ interconnect inputs, inductive loop detector inputs, and low voltage DC inputs on a swing down panel assembly fabricated from sturdy aluminum. Attach the swing down panel to the bottom rear cabinet rack assembly using thumb screws. Ensure the swing down panel allows for easy removal of the input file without removing the surge protection panel assembly or its parts. Have the surge protection devices mounted horizontally on the panel and soldered to the feed through terminals of four 14 position terminal blocks with #8 screws mounted on the other side. Ensure the top row of terminals is connected to the upper slots and the bottom row of terminals is connected to the bottom slots. Provide a 15 position copper equipment ground bus attached to the field terminal side (outside) of

the swing down panel for termination of loop lead-in shield grounds. Ensure that a Number 4 AWG green wire connects the surge protection panel assembly ground bus to the main cabinet equipment ground.

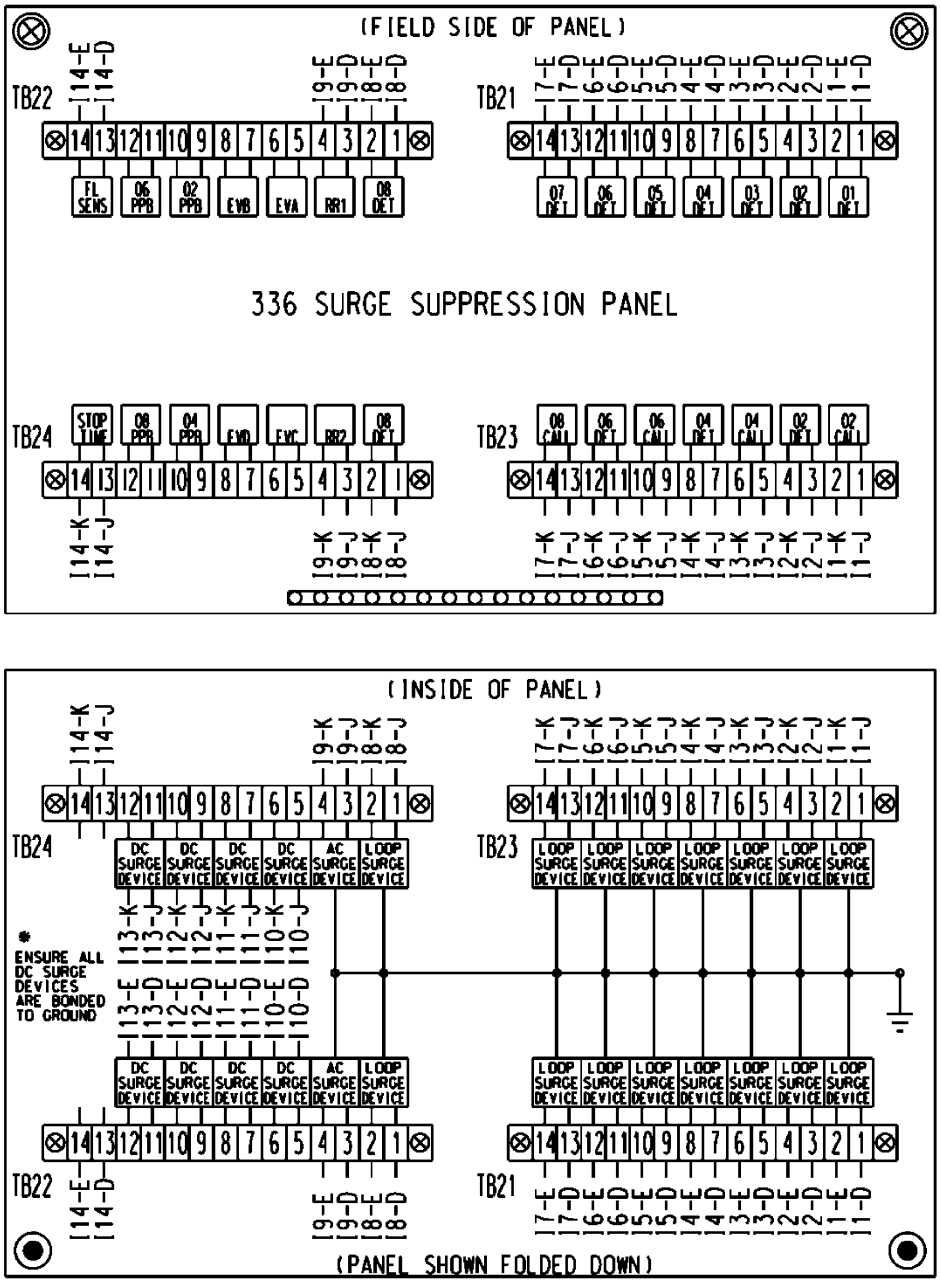

For base mounted cabinets, mount surge protection panels on the left side of the cabinet as viewed from the rear. Attach each panel to the cabinet rack assembly using bolts and make it easily removable. Mount the surge protection devices in vertical rows on each panel and connect the

devices to one side of 12 position, double row terminal blocks with #8 screws. For each surge protection panel, terminate all grounds from the surge protection devices on a copper equipment ground bus attached to the surge protection panel. Wire the terminals to the rear of a standard input file using spade lugs for input file protection.

Provide permanent labels that indicate the slot and the pins connected to each terminal that may be viewed from the rear cabinet door. Label and orient terminals so that each pair of inputs is next to each other. Indicate on the labeling the input file (I or J), the slot number (1-14) and the terminal pins of the input slots (either D & E for upper or J & K for lower).

Provide a minimum 14 x 16 inch pull out, hinged top shelf located immediately below controller mounting section of the cabinet. Ensure the shelf is designed to fully expose the table surface outside the controller at a height approximately even with the bottom of the controller. Ensure the shelf has a storage bin interior which is a minimum of 1 inch deep and approximately the same dimensions as the shelf. Provide an access to the storage area by lifting the hinged top of the shelf. Fabricate the shelf and slide from aluminum or stainless steel and ensure the assembly can support the 2070L controller plus 15 pounds of additional weight. Ensure shelf has a locking mechanism to secure it in the fully extended position and does not inhibit the removal of the 2070L controller or removal of cards inside the controller when fully extended. Provide a locking mechanism that is easily released when the shelf is to be returned to its non-use position directly under the controller.

D. Model 2018 Enhanced Conflict Monitor:

Furnish Model 2018 Enhanced Conflict Monitors that provide monitoring of 18 channels. Ensure each channel consists of a green, yellow, and red field signal input. Ensure that the conflict monitor meets or exceeds CALTRANS' Transportation Electrical Equipment Specifications dated March 12, 2009, with Erratum 1 (hereafter referred to as CALTRANS' 2009 TEES) for a model 210 monitor unit and other requirements stated in this specification.

Ensure the conflict monitor is provided with an 18 channel conflict programming card. Pin EE and Pin T of the conflict programming card shall be connected together. Pin 16 of the conflict programming card shall be floating. Ensure that the absence of the conflict programming card will cause the conflict monitor to trigger (enter into fault mode), and remain in the triggered state until the programming card is properly inserted and the conflict monitor is reset.

Provide a conflict monitor that incorporates LED indicators into the front panel to dynamically display the status of the monitor under normal conditions and to provide a comprehensive review of field inputs with monitor status under fault conditions. Ensure that the monitor indicates the channels that were active during a conflict condition and the channels that experienced a failure for all other per channel fault conditions detected. Ensure that these indications and the status of each channel are retained until the Conflict Monitor is reset. Furnish LED indicators for the following:

- AC Power (Green LED indicator)
- VDC Failed (Red LED indicator)
- WDT Error (Red LED indicator)
- Conflict (Red LED indicator)
- Red Fail (Red LED indicator)
- Dual Indication (Red LED indicator)

- Yellow/Clearance Failure (Red LED indicator)
- PCA/PC Ajar (Red LED indicator)
- Monitor Fail/Diagnostic Failure (Red LED indicator)
- 54 Channel Status Indicators (1 Red, 1 Yellow, and 1 Green LED indicator for each of the 18 channels)

Provide a switch to set the Red Fail fault timing. Ensure that when the switch is in the ON position the Red Fail fault timing value is set to 1350 +/- 150 ms (2018 mode). Ensure that when the switch is in the OFF position the Red Fail fault timing value is set to 850 +/- 150 ms (210 mode).

Provide a switch to set the Watchdog fault timing. Ensure that when the switch is in the ON position the Watchdog fault timing value is set to 1.0 +/- 0.1 s (2018 mode). Ensure that when the switch is in the OFF position the Watchdog fault timing value is set to 1.5 +/- 0.1 s (210 mode).

Provide a jumper or switch to set the AC line brown-out levels. Ensure that when the jumper is present or the switch is in the ON position the AC line dropout voltage threshold is 98 +/- 2 Vrms, the AC line restore voltage threshold is 103 +/- 2 Vrms, and the AC line brown-out timing value is set to 400 +/- 50ms (2018 mode). Ensure that when the jumper is not present or the switch is in the OFF position the AC line dropout voltage threshold is 92 +/- 2 Vrms, the AC line restore voltage threshold is 98 +/- 2 Vrms, and the AC line brown-out timing value is set to 80 +/- 17 ms (210 mode).

Provide a jumper or switch that will enable and disable the Watchdog Latch function. Ensure that when the jumper is not present or the switch is in the OFF position the Watchdog Latch function is disabled. In this mode of operation, a Watchdog fault will be reset following a power loss, brownout, or power interruption. Ensure that when the jumper is present or the switch is in the ON position the Watchdog Latch function is enabled. In this mode of operation, a Watchdog fault will be retained until a Reset command is issued.

Provide a jumper that will reverse the active polarity for pin #EE (output relay common). Ensure that when the jumper is not present pin #EE (output relay common) will be considered ‘Active’ at a voltage greater than 70 Vrms and ‘Not Active’ at a voltage less than 50 Vrms (Caltrans mode). Ensure that when the jumper is present pin #EE (output relay common) will be considered ‘Active’ at a voltage less than 50 Vrms and ‘Not Active’ at a voltage greater than 70 Vrms (Failsafe mode).

In addition to the connectors required by CALTRANS’ 2009 TEES, provide the conflict monitor with a red interface connector mounted on the front of the monitor. Ensure the connector is a 20 pin, right angle, center polarized, male connector with latching clip locks and polarizing keys. Ensure the right angle solder tails are designed for a 0.062” thick printed circuit board. Keying of the connector shall be between pins 3 and 5, and between 17 and 19. Ensure the connector has two rows of pins with the odd numbered pins on one row and the even pins on the other row. Ensure the connector pin row spacing is 0.10” and pitch is 0.10”. Ensure the mating length of the connector pins is 0.24”. Ensure the pins are finished with gold plating 30µ” thick.

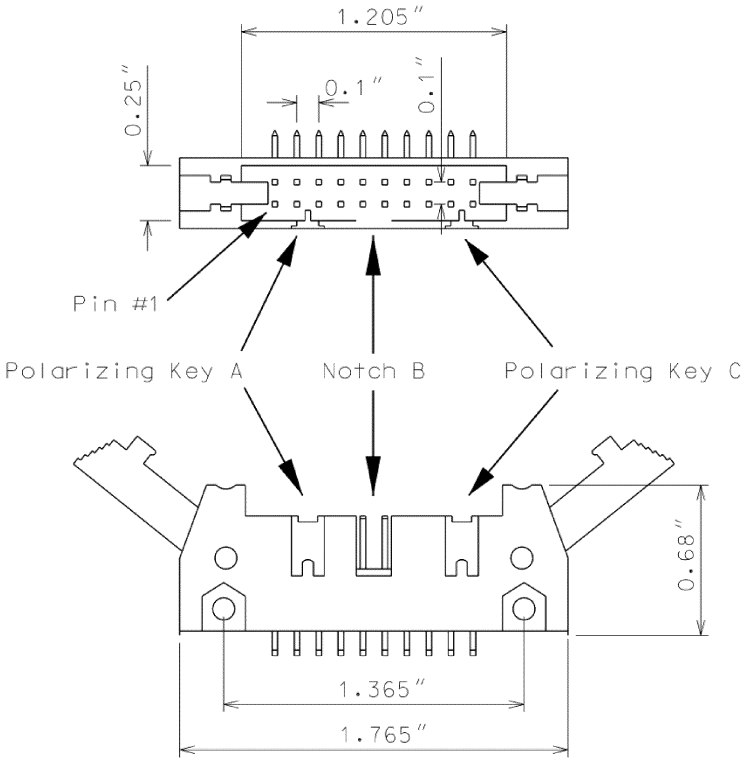

Ensure the red interface connector pins on the monitor have the following functions:

Pin #	Function	Pin #	Function
1	Channel 15 Red	2	Channel 16 Red
3	Channel 14 Red	4	Chassis Ground
5	Channel 13 Red	6	Special Function 2
7	Channel 12 Red	8	Special Function 1
9	Channel 10 Red	10	Channel 11 Red
11	Channel 9 Red	12	Channel 8 Red
13	Channel 7 Red	14	Channel 6 Red
15	Channel 5 Red	16	Channel 4 Red
17	Channel 3 Red	18	Channel 2 Red
19	Channel 1 Red	20	Red Enable

Ensure that removal of the P20 cable connector will cause the conflict monitor to recognize a latching fault condition and place the cabinet into flashing operation.

Provide Special Function 1 and Special Function 2 inputs to the unit which shall disable only Red Fail Monitoring when either input is sensed active. A Special Function input shall be sensed active when the input voltage exceeds 70 Vrms with a minimum duration of 550 ms. A Special Function input shall be sensed not active when the input voltage is less than 50 Vrms or the duration is less than 250 ms. A Special Function input is undefined by these specifications and may or may not be sensed active when the input voltage is between 50 Vrms and 70 Vrms or the duration is between 250 ms and 550 ms.

Ensure the conflict monitor recognizes field signal inputs for each channel that meet the following requirements:

- consider a Red input greater than 70 Vrms and with a duration of at least 500 ms as an "on" condition;
- consider a Red input less than 50 Vrms or with a duration of less than 200 ms as an "off" condition (no valid signal);
- consider a Red input between 50 Vrms and 70 Vrms or with a duration between 200 ms and 500 ms to be undefined by these specifications;
- consider a Green or Yellow input greater than 25 Vrms and with a duration of at least 500 ms as an "on" condition;
- consider a Green or Yellow input less than 15 Vrms or with a duration of less than 200 ms as an "off" condition; and
- consider a Green or Yellow input between 15 Vrms and 25 Vrms or with a duration between 200 ms and 500 ms to be undefined by these specifications.

Provide a conflict monitor that recognizes the faults specified by CALTRANS' 2009 TEES and the following additional faults. Ensure the conflict monitor will trigger upon detection of a fault and will remain in the triggered (in fault mode) state until the unit is reset at the front panel or through the external remote reset input for the following failures:

1. **Red Monitoring or Absence of Any Indication (Red Failure):** A condition in which no "on" voltage signal is detected on any of the green, yellow, or red inputs to a given monitor channel. If a signal is not detected on at least one input (R, Y, or G) of a conflict monitor channel for a period greater than 1000 ms when used with a 170 controller and 1500 ms when used with a 2070 controller, ensure monitor will trigger and put the intersection into flash. If the absence of any indication condition lasts less than 700 ms when used with a 170 controller and 1200 ms when used with a 2070 controller, ensure conflict monitor will not trigger. Red fail monitoring shall be enabled on a per channel basis by the use of switches located on the conflict monitor. Have red monitoring occur when all of the following input conditions are in effect:

    a) Red Enable input to monitor is active (Red Enable voltages are "on" at greater than 70 Vrms, off at less than 50 Vrms, undefined between 50 and 70 Vrms), and

    b) Neither Special Function 1 nor Special Function 2 inputs are active.

c) Pin #EE (output relay common) is not active

2. **Short/Missing Yellow Indication Fault (Clearance Error):** Yellow indication following a green is missing or shorter than 2.7 seconds (with ± 0.1-second accuracy). If a channel fails to detect an "on" signal at the Yellow input for a minimum of 2.7 seconds (± 0.1 second) following the detection of an "on" signal at a Green input for that channel, ensure that the monitor triggers and generates a clearance/short yellow error fault indication. Short/missing yellow (clearance) monitoring shall be enabled on a per channel basis by the use of switches located on the conflict monitor. This fault shall not occur when the channel is programmed for Yellow Inhibit, when the Red Enable signal is inactive or pin #EE (output relay common) is active.
3. **Dual Indications on the Same Channel:** In this condition, more than one indication (R,Y,G) is detected as "on" at the same time on the same channel. If dual indications are detected for a period greater than 500 ms, ensure that the conflict monitor triggers and displays the proper failure indication (Dual Ind fault). If this condition is detected for less than 200 ms, ensure that the monitor does not trigger. G-Y-R dual indication monitoring shall be enabled on a per channel basis by the use of switches located on the conflict monitor. G-Y dual indication monitoring shall be enabled for all channels by use of a switch located on the conflict monitor. This fault shall not occur when the Red Enable signal is inactive or pin #EE (output relay common) is active.
4. **Configuration Settings Change:** The configuration settings are comprised of (as a minimum) the permissive diode matrix, dual indication switches, yellow disable jumpers, any option switches, any option jumpers, and the Watchdog Enable switch. Ensure the conflict monitor compares the current configuration settings with the previous stored configuration settings on power-up, on reset, and periodically during operation. If any of the configuration settings are changed, ensure that the conflict monitor triggers and causes the program card indicator to flash. Ensure that configuration change faults are only reset by depressing and holding the front panel reset button for a minimum of three seconds. Ensure the external remote reset input does not reset configuration change faults.

Ensure the conflict monitor will trigger and the AC Power indicator will flash at a rate of 2 Hz ± 20% with a 50% duty cycle when the AC Line voltage falls below the "drop-out" level. Ensure the conflict monitor will resume normal operation when the AC Line voltage returns above the "restore" level. Ensure the AC Power indicator will remain illuminated when the AC voltage returns above the "restore" level. Should an AC Line power interruption occur while the monitor is in the fault mode, then upon restoration of AC Line power, the monitor will remain in the fault mode and the correct fault and channel indicators will be displayed.

Provide a flash interval of at least 6 seconds and at most 10 seconds in duration following a power-up, an AC Line interruption, or a brownout restore. Ensure the conflict monitor will suspend all fault monitoring functions, close the Output relay contacts, and flash the AC indicator at a rate of 4 Hz ± 20% with a 50% duty cycle during this interval. Ensure the termination of the flash interval after at least 6 seconds if the Watchdog input has made 5 transitions between the True and False state and the AC Line voltage is greater than the "restore" level. If the watchdog input has not made

5 transitions between the True and False state within 10 ± 0.5 seconds, the monitor shall enter a WDT error fault condition.

Ensure the conflict monitor will monitor an intersection with a minimum of four approaches using the four-section Flashing Yellow Arrow (FYA) vehicle traffic signal as outlined by the NCHRP 3-54 research project for protected-permissive left turn signal displays. Ensure the conflict monitor will operate in the FYA mode and FYAc (Compact) mode as specified below to monitor each channel pair for the following fault conditions: Conflict, Flash Rate Detection, Red Fail, Dual Indication, and Clearance. Provide a switch to select between the FYA mode and FYAc mode. Provide a switch to select each FYA phase movement for monitoring.

FYA mode

FYA Signal Head	Phase 1	Phase 3	Phase 5	Phase 7
Red Arrow	Channel 9 Red	Channel 10 Red	Channel 11 Red	Channel 12 Red
Yellow Arrow	Channel 9 Yellow	Channel 10 Yellow	Channel 11 Yellow	Channel 12 Yellow
Flashing Yellow Arrow	Channel 9 Green	Channel 10 Green	Channel 11 Green	Channel 12 Green
Green Arrow	Channel 1 Green	Channel 3 Green	Channel 5 Green	Channel 7 Green

FYAc mode

FYA Signal Head	Phase 1	Phase 3	Phase 5	Phase 7
Red Arrow	Channel 1 Red	Channel 3 Red	Channel 5 Red	Channel 7 Red
Yellow Arrow	Channel 1 Yellow	Channel 3 Yellow	Channel 5 Yellow	Channel 7 Yellow
Flashing Yellow Arrow	Channel 1 Green	Channel 3 Green	Channel 5 Green	Channel 7 Green
Green Arrow	Channel 9 Green	Channel 9 Yellow	Channel 10 Green	Channel 10 Yellow

If a FYA channel pair is enabled for FYA operation, the conflict monitor will monitor the FYA logical channel pair for the additional following conditions:

1. **Conflict:** Channel conflicts are detected based on the permissive programming jumpers on the program card. This operation remains unchanged from normal operation except for the solid Yellow arrow (FYA clearance) signal.
2. **Yellow Change Interval Conflict:** During the Yellow change interval of the Permissive Turn channel (flashing Yellow arrow) the conflict monitor shall verify that no conflicting channels to the solid Yellow arrow channel (clearance) are active. These conflicting channels shall be determined by the program card compatibility programming of the Permissive Turn channel (flashing Yellow arrow). During the Yellow change interval of the Protected Turn channel (solid Green arrow) the conflict monitor shall verify that no conflicting channels to the solid Yellow arrow channel (clearance) are active as determined by the program card compatibility programming of the Protected Turn channel (solid Green arrow).
3. **Flash Rate Detection:** The conflict monitor unit shall monitor for the absence of a valid flash rate for the Permissive turn channel (flashing Yellow arrow). If the Permissive turn channel (flashing Yellow arrow) is active for a period greater than 1600 milliseconds, ensure the conflict monitor triggers and puts the intersection into flash. If the Permissive turn channel (flashing Yellow arrow) is active for a period less than 1400 milliseconds, ensure the conflict monitor does not trigger. Ensure the conflict monitor will remain in the triggered (in fault mode) state until the unit is reset at the front panel or through the external remote reset input. Provide a jumper or switch that will enable and disable the Flash Rate Detection function. Ensure that when the jumper is not present or the switch is in the OFF position the Flash Rate Detection function is enabled. Ensure that when the jumper is present or the switch is in the ON position the Flash Rate Detection function is disabled.
4. **Red Monitoring or Absence of Any Indication (Red Failure):** The conflict monitor unit shall detect a red failure if there is an absence of voltage on all four of the inputs of a FYA channel pair (RA, YA, FYA, GA).
5. **Dual Indications on the Same Channel:** The conflict monitor unit shall detect a dual indication if two or more inputs of a FYA channel pair (RA, YA, FYA, GA) are “on” at the same time.
6. **Short/Missing Yellow Indication Fault (Clearance Error):** The conflict monitor unit shall monitor the solid Yellow arrow for a clearance fault when terminating both the Protected Turn channel (solid Green arrow) interval and the Permissive Turn channel (flashing Yellow arrow) interval.

Ensure that the conflict monitor will log at least nine of the most recent events detected by the monitor in non-volatile EEPROM memory (or equivalent). For each event, record at a minimum the time, date, type of event, status of each field signal indication with RMS voltage, and specific channels involved with the event. Ensure the conflict monitor will log the following events: monitor reset, configuration, previous fault, and AC line. Furnish the signal sequence log that shows all channel states (Greens, Yellows, and Reds) and the Red Enable State for a minimum of 2 seconds prior to the current fault trigger point. Ensure the display resolution of the inputs for the signal sequence log is not greater than 50 ms.

For conflict monitors used within an Ethernet communications system, provide a conflict monitor with an Ethernet 10/100 Mbps, RJ-45 port for data communication access to the monitor by a local notebook computer and remotely via a workstation or notebook computer device connected to the signal system local area network. The Ethernet port shall be electrically isolated from the conflict monitor's electronics and shall provide a minimum of 1500 Vrms isolation. Integrate monitor with Ethernet network in cabinet. Provide software to retrieve the time and date from a network server in order to synchronize the on-board times between the conflict monitor and the controller. Furnish and install the following Windows based, graphic user interface software on workstations and notebook computers where the signal system client software is installed: 1) software to view and retrieve all event log information, 2) software that will search and display a list of conflict monitor IP addresses and IDs on the network, and 3) software to change the conflict monitor's network parameters such as IP address and subnet mask.

For non-Ethernet connected monitors, provide a RS-232C/D compliant port (DB-9 female connector) on the front panel of the conflict monitor in order to provide communications from the conflict monitor to the 170/2070 controller or to a Department-furnished laptop computer. Electrically isolate the port interface electronics from all monitor electronics, excluding Chassis Ground. Ensure that the controller can receive all event log information through a controller Asynchronous Communications Interface Adapter (Type 170E) or Async Serial Comm Module (2070). Furnish and connect a serial cable from the conflict monitor's DB-9 connector to Comm Port 1 of the 2070 controller. Ensure conflict monitor communicates with the controller. Provide a Windows based graphic user interface software to communicate directly through the same monitor RS-232C/D compliant port to retrieve and view all event log information to a Department-furnished laptop computer. The RS-232C/D compliant port on the monitor shall allow the monitor to function as a DCE device with pin connections as follows:

Conflict Monitor RS-232C/D (DB-9 Female) Pinout		
Pin Number	**Function**	**I/O**
1	DCD	O
2	TX Data	O
3	RX Data	I
4	DTR	I
5	Ground	-
6	DSR	O
7	CTS	I
8	RTS	O
9	NC	-

MONITOR BOARD EDGE CONNECTOR			
Pin #	**Function (Back Side)**	**Pin #**	**Function (Component Side)**
1	Channel 2 Green	A	Channel 2 Yellow
2	Channel 13 Green	B	Channel 6 Green
3	Channel 6 Yellow	C	Channel 15 Green
4	Channel 4 Green	D	Channel 4 Yellow
5	Channel 14 Green	E	Channel 8 Green
6	Channel 8 Yellow	F	Channel 16 Green
7	Channel 5 Green	H	Channel 5 Yellow
8	Channel 13 Yellow	J	Channel 1 Green
9	Channel 1 Yellow	K	Channel 15 Yellow
10	Channel 7 Green	L	Channel 7 Yellow
11	Channel 14 Yellow	M	Channel 3 Green
12	Channel 3 Yellow	N	Channel 16 Yellow
13	Channel 9 Green	P	Channel 17 Yellow
14	Channel 17 Green	R	Channel 10 Green
15	Channel 11 Yellow	S	Channel 11 Green
16	Channel 9 Yellow	T	Channel 18 Yellow
17	Channel 18 Green	U	Channel 10 Yellow
--		--	
18	Channel 12 Yellow	V	Channel 12 Green
19	Channel 17 Red	W	Channel 18 Red
20	Chassis Ground	X	Not Assigned
21	AC-	Y	DC Common
22	Watchdog Timer	Z	External Test Reset
23	+24VDC	AA	+24VDC
24	Tied to Pin 25	BB	Stop Time (Output)
25	Tied to Pin 24	CC	Not Assigned
26	Not Assigned	DD	Not Assigned
27	Relay Output, Side #3, N.O.	EE	Relay Output,Side #2,Common
28	Relay Output, Side #1, N.C.	FF	AC+

-- Slotted for keying between Pins 17/U and 18/V

CONFLICT PROGRAM CARD PIN ASSIGNMENTS

Pin #	Function (Back Side)	Pin #	Function (Component Side)
1	Channel 2 Green	A	Channel 1 Green
2	Channel 3 Green	B	Channel 2 Green
3	Channel 4 Green	C	Channel 3 Green
4	Channel 5 Green	D	Channel 4 Green
5	Channel 6 Green	E	Channel 5 Green
6	Channel 7 Green	F	Channel 6 Green
7	Channel 8 Green	H	Channel 7 Green
8	Channel 9 Green	J	Channel 8 Green
9	Channel 10 Green	K	Channel 9 Green
10	Channel 11 Green	L	Channel 10 Green
11	Channel 12 Green	M	Channel 11 Green
12	Channel 13 Green	N	Channel 12 Green
13	Channel 14 Green	P	Channel 13 Green
14	Channel 15 Green	R	Channel 14 Green
15	Channel 16 Green	S	Channel 15 Green
16	N/C	T	PC AJAR
17	Channel 1 Yellow	U	Channel 9 Yellow
18	Channel 2 Yellow	V	Channel 10 Yellow
19	Channel 3 Yellow	W	Channel 11 Yellow
20	Channel 4 Yellow	X	Channel 12 Yellow
21	Channel 5 Yellow	Y	Channel 13 Yellow
22	Channel 6 Yellow	Z	Channel 14 Yellow
23	Channel 7 Yellow	AA	Channel 15 Yellow
24	Channel 8 Yellow	BB	Channel 16 Yellow
--		--	
25	Channel 17 Green	CC	Channel 17 Yellow
26	Channel 18 Green	DD	Channel 18 Yellow
27	Channel 16 Green	EE	PC AJAR (Program Card)
28	Yellow Inhibit Common	FF	Channel 17 Green

-- Slotted for keying between Pins 24/BB and 25/CC

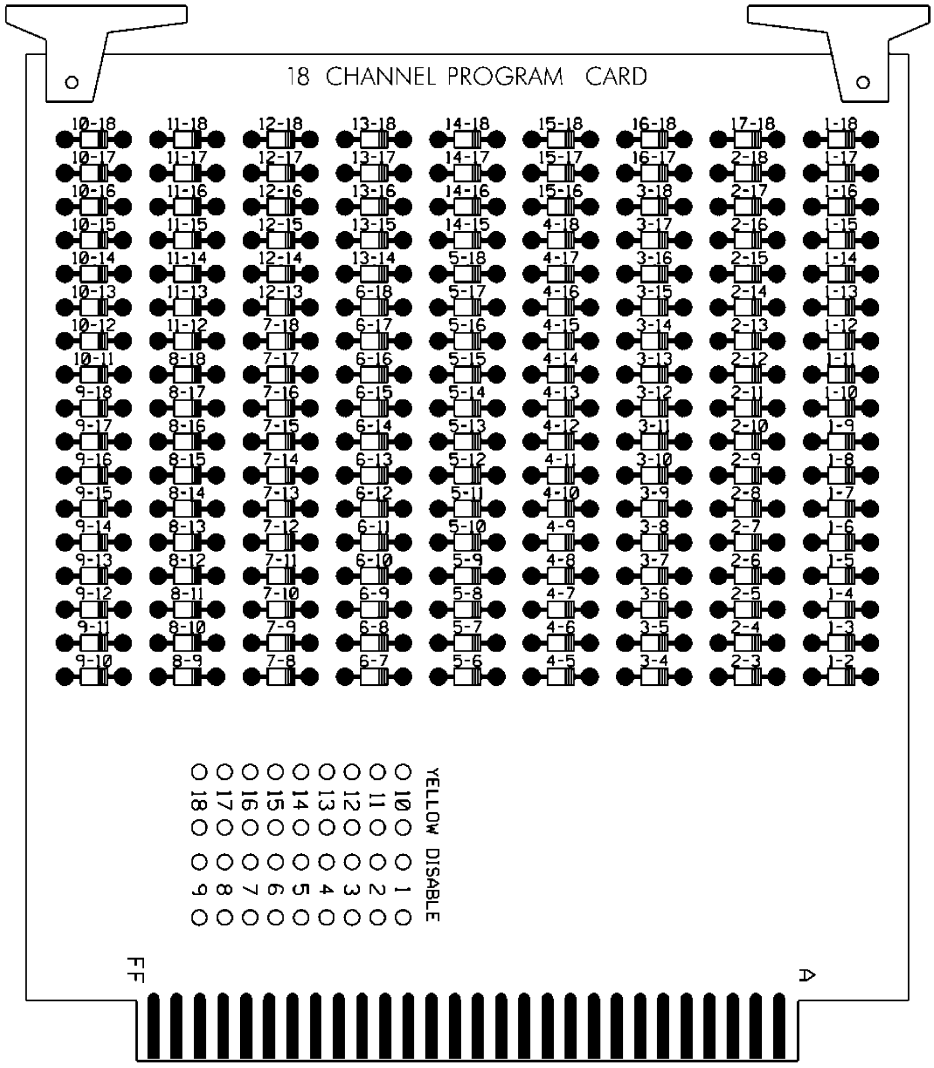

E. Preemption and Sign Control Box

Provide preemption and sign control box to operate in a Model 332 and Model 336S cabinet. Provide hardware to mount the box to the cage of the cabinet to ensure the front side is facing the opposite side of the cabinet. Furnish the material of the box from a durable finished metallic or thermoplastic case. Ensure the size of the box is not greater than 7(l) x 5(w) x 5(d) inches. Ensure that no modification is necessary to mount the box on the cabinet cage.

Provide the following components in the preemption and sign control box: relays, fuses, terminal blocks, MOVs, resistor, RC network, lamp, and push button switch.

Provide UL Listed or Recognized relay K1 as a DPDT enclosed relay (120 VAC, 60 Hz coil) with an 8-pin octal-style plug and associated octal base. Provide contact material made of AgCdO with a 10 amp, 240 VAC rating. Ensure the relay has a specified pickup voltage of 102 VAC.

Provide relay SSR1 as a Triac SPST normally open solid state relay that is rated for 120 VAC input and zero-crossing (resistive load) 25 amp @ 120 VAC output. Ensure the relay turns on at 90 Vrms within 10 ms and turns off at 10 Vrms within 40 ms. Ensure the relay has physical

characteristics as shown in the wiring detail in Figure 1. Provide 4 terminal screws with saddle clamps.

Provide fuses F1 and F2 as a UL Listed ¼″ x 1-1/4″ glass tube rated at 250 volts with a 10kA interrupting rating. Ensure F1 non-delay (fast-acting) and F2 slow-blow (time-delay) fuses have a maximum opening times of 60 minutes and 120 seconds for currents of 135 and 200 percent of the ampere rating, respectively. Ensure F2 slow-blow (time-delay) fuses have a minimum opening times of 12 seconds at 200 percent of the ampere rating. Provide fuse holders that are UL Recognized panel-mounted holders rated 250V, 15 ampere minimum with bayonet-type knobs which accept ¼″ x 1-1/4″ glass tube fuses.

Provide terminal blocks that are rated for 300V and are made of electrical grade thermoplastic or thermosetting plastic. Ensure each terminal block is of closed back design and has recessed-screw terminals with molded barriers between terminals. Ensure each terminal block is labeled with a block designation. Ensure each terminal is labeled with the function and a number.

Provide 3/4-inch diameter radial lead UL-recognized metal oxide varistors (MOVs) that have electrical performance as outlined below.

PROPERTIES OF MOV SURGE PROTECTOR	
Maximum Continuous Applied Voltage at 185° F	150 VAC (RMS) 200 VDC
Maximum Peak 8x20µs Current at 185° F	6500 A
Maximum Energy Rating at 185° F	80 J
Voltage Range 1 mA DC Test at 77° F	212-268 V
Max. Clamping Voltage 8x20µs, 100A at 77° F	395 V
Typical Capacitance (1 MHz) at 77° F	1600 pF

Provide resistor R1 as a 2K ohm, 12 watt, wirewound resistor with tinned terminals and attaching leads. Ensure the resistor is spaced apart from surrounding wires.

Provide a LED or incandescent lamp that has a voltage rating of 120 VAC with a minimum life rating at 50,000 hours.

Wire the preemption and sign control box as shown in Figure 1.

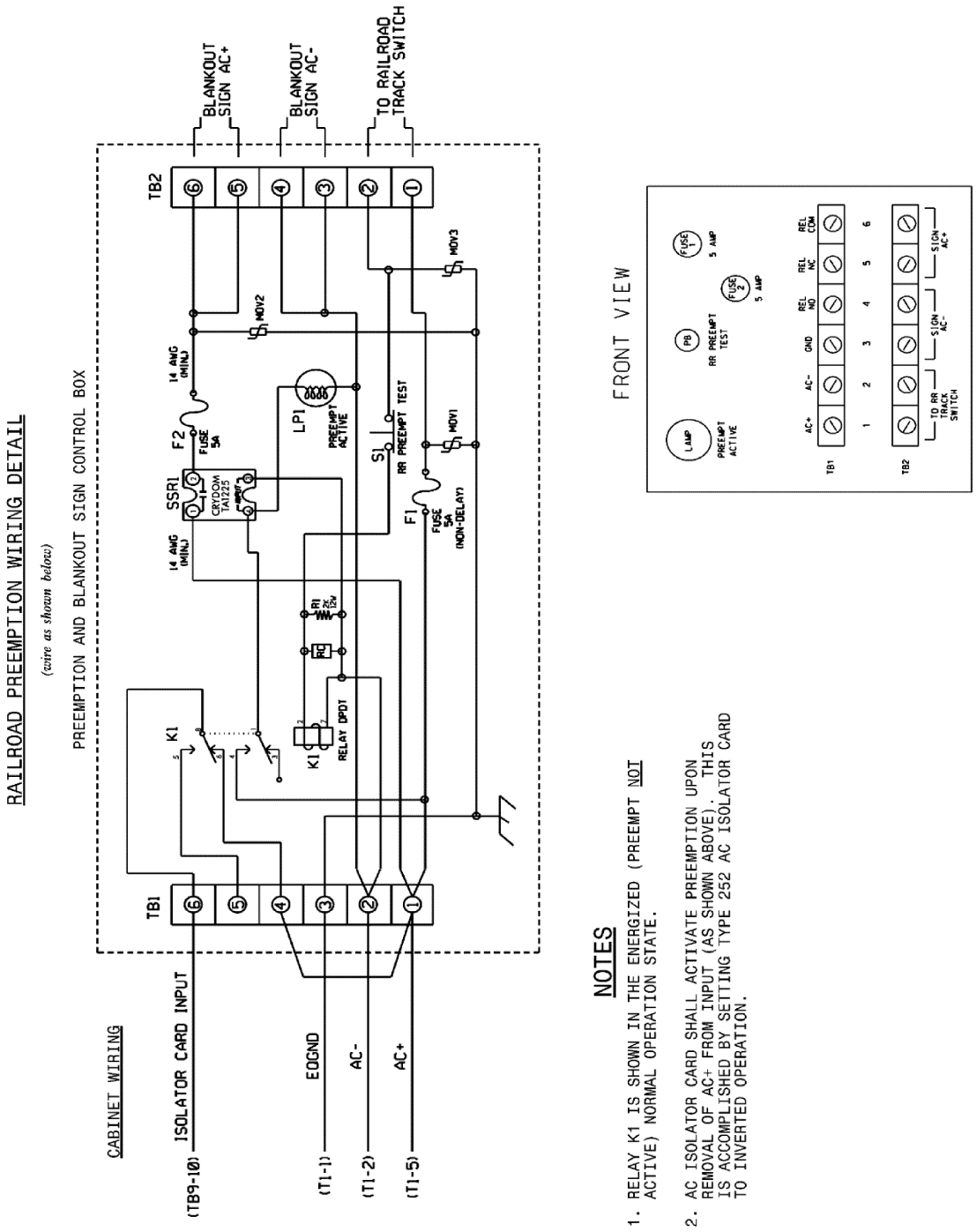
RAILROAD PREEMPTION WIRING DETAIL
(wire as shown below)
PREEMPTION AND BLANKOUT SIGN CONTROL BOX
CABINET WIRING
ISOLATOR CARD INPUT
(TB9-10)
EQGND
(T1-1)
AC-
(T1-2)
AC+
(T1-5)
TB1
TB2
K1
RELAY DPDT
R1
R2
SSR1
F2
FUSE 5A
14 AWG (MIN.)
LP1
PREEMPT ACTIVE
S1
RR PREEMPT TEST
F1
FUSE 5A (NON-DELAY)
MOV1
MOV2
MOV3
BLANKOUT SIGN AC+
BLANKOUT SIGN AC-
TO RAILROAD TRACK SWITCH
NOTES
1. RELAY K1 IS SHOWN IN THE ENERGIZED (PREEMPT NOT ACTIVE) NORMAL OPERATION STATE.
2. AC ISOLATOR CARD SHALL ACTIVATE PREEMPTION UPON REMOVAL OF AC+ FROM INPUT (AS SHOWN ABOVE). THIS IS ACCOMPLISHED BY SETTING TYPE 252 AC ISOLATOR CARD TO INVERTED OPERATION.
FRONT VIEW
LAMP
PREEMPT ACTIVE
PB
RR PREEMPT TEST
FUSE 1
5 AMP
FUSE 2
5 AMP
AC+
AC-
GND
REL NO
REL NC
REL COM
TB1
1 2 3 4 5 6
TB2
TO RR TRACK SWITCH
SIGN AC-
SIGN AC+

Figure 1

5.3. MATERIALS – TYPE 170 DETECTOR SENSOR UNITS

Furnish detector sensor units that comply with Chapter 5 Section 1, "General Requirements," and Chapter 5 Section 2, "Model 222 & 224 Loop Detector Sensor Unit Requirements," of the CALTRANS "Transportation Electrical Equipment Specifications" dated March 12, 2009 with Erratum 1.

5.4. MATERIALS – TYPE 2070E CONTROLLERS

Furnish and install new 2070E Controller in existing 2070 signal cabinet. Furnish conflict monitor or malfunction management unit. Ensure that removal of the CPU module from the controller will place the intersection into flash.

Conform to CALTRANS *Transportation Electrical Equipment Specifications* (TEES) (dated March 12, 2009, plus Errata 1 dated January 21, 2010) except as required herein.

The Department will provide software at the beginning of the burning-in period. Contractor shall give 5 working days notice before needing software. Program software provided by the Department.

Provide Model 2070E controllers with the latest version of OS9 operating software and device drivers, composed of the unit chassis and at a minimum the following modules and assemblies:

- MODEL 2070-1E, CPU Module, Single Board, with 8Mb Datakey (blue in color)
- MODEL 2070-2A or approved MODEL 2070-2E, Field I/O Module (FI/O)
  - Note: Configure the Field I/O Module to disable both the External WDT Shunt/Toggle Switch and SP3 (SP3 active indicator is "off")
- MODEL 2070-3B, Front Panel Module (FP), Display B (8x40)
- MODEL 2070-4, Power Supply Module, 10 AMP
- MODEL 2070-7A, Async Serial Com Module (9-pin RS-232)

Furnish one additional MODEL 2070-7A, Async Serial Com Module (9-pin RS-232) for all master controller locations.

For each master location and central control center, furnish a U.S. Robotics V.92 or approved equivalent auto-dial/auto-answer external modem to accomplish the interface to the Department-furnished microcomputers. Include all necessary hardware to ensure telecommunications.

A. General:

Remove existing controller where required. Take existing equipment out of service only at the time directed.

Install controller and hardware that provide required phasing, color sequence, flash sequence, interconnection, railroad clearance and preemption and emergency vehicle clearance and preemption.

Do not program controller for late night flashing operation at railroad preemption installations. For all other installations, do not program controller for late night flashing operation unless otherwise directed. Ensure all signal heads for same approach flash concurrently during flashing operation. Provide serial number for each new controller installed. Activate controller with proposed phasing and timing.

B. Workshop:

Provide enclosed workshop to set up and test new controller before installation. Locate workshop within Division responsible for project administration. Ensure workshop provides

protection from weather and sufficient space to house 2 test observers, all necessary test equipment and material, controllers, and cabinets.

Configure and test each controller to match the proposed signal design. Ensure all equipment furnished and installed or modified by the Contractor at each location operates in full compliance with the plans and project special provisions. Test each controller for proper color sequence, flashing operation, phase timings, preemption, coordination and conflict monitor programming or malfunction management unit programming. Ensure that simultaneous confliction phase outputs will cause the cabinet to revert to flashing operation. For intersections with any type of preemption, submit a completed Preemption Test Procedure Checklist. The checklist is located on the Department's website.

Test the controller for eight hours minimum. Following this test and before installation, the Engineer will inspect the equipment in operation. The Engineer may require other tests to ensure proper operation. These tests shall be at no additional cost to the Department.

C. Measurement and Payment:

Furnish and Install new 2070E Controller in Existing Cabinet will be measured and paid as the actual number of each type of controller furnished, installed, and accepted.

No measurement will be made of conflict monitors or malfunction detection units as these will be incidental to furnishing and installing controllers.

Payment will be made under:

Pay Item	**Pay Unit**
Furnish and Install new 2070E Controller in Existing Cabinet	Each

6. BACK PULL FIBER OPTIC CABLE

6.1. DESCRIPTION

Back pull and store or back pull and reinstall existing communications cable.

6.1. CONSTRUCTION

During project construction where instructed to back pull existing aerial sections of fiber optic communications cable, de-lash the cable from the messenger cable and back pull the cable to a point where it can be stored or re-routed as shown on the plans. If instructed, remove and discard the existing messenger cable and pole mounting hardware once the cable is safely out of harm's way.

During project construction where instructed to back pull existing underground sections of fiber optic communications cable, back pull the cable to a point where it can be stored or re-routed as shown on the plans. If instructed, remove abandoned junction boxes and backfill with a suitable material to match the existing grade. Leave abandoned conduits in place unless otherwise noted.

Where instructed, re-pull the fiber optic cable back along messenger cable or through conduit systems.

6.2. MEASUREMENT AND PAYMENT

Back Pull Fiber Optic Cable will be paid for as the actual linear feet of fiber optic cable back pulled and either stored or back pulled and rerouted. Payment is for the actual linear feet of cable back pulled.

No payment will be made for removing messenger cable and pole mounting hardware or removing junction boxes and back filling to match the surrounding grade as these items of work will be considered incidental to back pulling the fiber optic cable.

Payment will be made under:

Back Pull Fiber Optic Cable ..... Linear Feet

DocuSign Envelope ID: 1560E7E9-5A86-4A74-AE3A-80BFF48C90C9

Project Special Provisions
Structures

Table of Contents

Page No.

Maintenance and Protection of Traffic Beneath Proposed Structure at Station 15+75.56 -Y1- (8-13-04) ---------- ST-2

Temporary Bents (9-30-11) ---------- ST-2

Placing Load on Structure Members (11-27-12) ---------- ST-4

Electrical Conduit System for Signals (9-30-11) ---------- ST-4

Disc Bearings (2-3-14) ---------- ST-7

Thermal Sprayed Coatings (Metallization) (9-30-11) ---------- ST-12

Sand Lightweight Concrete (9-30-11) ---------- ST-17

Expansion Joint Seals (9-30-11) ---------- ST-18

Falsework and Formwork (4-5-12) ---------- ST-21

Submittal of Working Drawings (6-28-17) ---------- ST-27

Crane Safety (8-15-05) ---------- ST-33

Grout for Structures (9-30-11) ---------- ST-34

Mass Concrete (1-23-15) ---------- ST-36

Concrete Barrier Rail With Moment Slab (1-17-12) ---------- ST-38



DocuSigned by:
Andrew L Phillips
2BB69ABAD4004D3...
10/30/2017

DocuSign Envelope ID: 1560E7E9-5A86-4A74-AE3A-80BFF48C90C9

MAINTENANCE AND PROTECTION OF TRAFFIC BENEATH PROPOSED STRUCTURE AT STATION 15+75.56 -Y1- **(8-13-04)**

1.0 GENERAL

Maintain traffic as shown in Traffic Control Plans and as directed by the Engineer.

Provide a minimum temporary vertical clearance of 16'-6" at all times during construction.

Submit plans and calculations for review and approval for protecting traffic and bracing girders, as described herein, at the above station before beginning work at this location. Have the drawings and design calculations prepared, signed, and sealed by a North Carolina Registered Professional Engineer. The approval of the Engineer will not relieve the Contractor of the responsibility for the safety of the method or equipment.

2.0 PROTECTION OF TRAFFIC

Protect traffic from any operation that affords the opportunity for construction materials, equipment, tools, etc. to be dropped into the path of traffic beneath the structure. Based on Contractor means and methods determine and clearly define all dead and live loads for this system, which, at a minimum, shall be installed between beams or girders over any travelway or shoulder area where traffic is maintained. Install the protective system before beginning any construction operations over traffic. In addition, for these same areas, keep the overhang falsework in place until after the rails have been poured.

3.0 BRACING GIRDERS

Brace girders to resist wind forces, weight of forms and other temporary loads, especially those eccentric to the vertical axis of the member during all stages of erection and construction. Before casting of intermediate diaphragms, decks, or connecting steel diaphragms do not allow the horizontal movement of girders to exceed ½ inch.

4.0 BASIS OF PAYMENT

Payment at the contract unit prices for the various pay items will be full compensation for the above work.

TEMPORARY BENTS **(9-30-11)**

When girder erection requires the use of temporary bents, design, construct, maintain and afterwards remove the temporary bents in accordance with the Standard Specifications and this Special Provision. For the purpose of this Special Provision, the term "temporary bents" includes girder erection temporary bents, vertical shoring and proprietary shoring systems.

DocuSign Envelope ID: 1560E7E9-5A86-4A74-AE3A-80BFF48C90C9

Temporary bents for structures over railroads shall maintain a minimum horizontal clearance of 25' from center of track.

Design temporary bents in accordance with the 1995 AASHTO Guide Design Specification for Bridge Temporary Works (including the 2008 Interim Revisions) and the Project Special Provision entitled "Falsework and Formwork". The design calculations and detailed drawings of the structural components shall be signed and sealed by a North Carolina Registered Professional Engineer.

Submit design calculations and detailed drawings of temporary bents to the Engineer for review and approval. The detailed drawings shall show the position of the temporary bents in relationship to the existing travel way, the location of the temporary bents with respect to the ends of the girders, the top of support elevations for setting girders in the cambered position, and a girder erection procedure. For stream crossings, determine the bent stability assuming a scour depth equal to 250% of the pile diameter or width below the existing bed elevation. The Engineer may require a more detailed analysis of scour depth for temporary bents containing more than a single row of piles.

Include all material specifications for new and used materials in the detail drawings. In addition, show the location of the used materials indicating condition of the material, the location and geometry of existing but unused holes, attachments left over from previous use and any other irregularities in the material. Account for the condition of all used materials in the design calculations.

For all manufactured components, provide engineering data supplied by the manufacturer. For proprietary shoring systems, evaluate differential leg loading.

Provide access to all new and used materials for inspection prior to assembly.

Before the temporary bent is loaded, the contractor shall inspect the bent in the presence of the Engineer, and submit a written statement certifying that the erected bent complies with the approved detailed drawings. Any condition or material that does not comply with the accepted drawings, or any other condition deemed unsatisfactory by the Engineer, is cause for rejection until corrections are made.

Remove temporary bents in such a manner as to permit the structure to uniformly and gradually take the stresses due to its own weight. During removal do not disturb or otherwise damage the finished work.

Unless otherwise specified, temporary bents will not be directly measured. Payment will be full compensation at the contract unit prices for the various pay items requiring temporary bents.

DocuSign Envelope ID: 1560E7E9-5A86-4A74-AE3A-80BFF48C90C9

PLACING LOAD ON STRUCTURE MEMBERS (11-27-12)

The 2012 Standard Specifications shall be revised as follows:

In **Section 420-20 – Placing Load on Structure Members** replace the first sentence of the fifth paragraph with the following:

Do not place vehicles or construction equipment on a bridge deck until the deck concrete develops the minimum specified 28 day compressive strength and attains an age of at least 7 curing days.

ELECTRICAL CONDUIT SYSTEM FOR SIGNALS (9-30-11)

1.0 GENERAL

The work covered by this section consists of furnishing and installing a conduit system suspended beneath structures and buried. Perform all work in accordance with these special provisions, the plans, and the National Electrical Code (NEC). Install the conduit system in accordance with NEC requirements as an approved raceway for electrical circuits.

The Contractor actually performing the work described in these special provisions is required to have a license of the proper classification from the North Carolina State Board of Examiners of Electrical Contractors.

The licensed Electrical Contractor is required to be available on the job site when the work is being performed or when requested by the Engineer. The licensed Electrical Contractor is required to have a set of plans and special provisions in his possession on the job site, and must maintain accurate "as built" plans.

2.0 MATERIALS

Submit eight (8) copies of catalog cuts and/or drawings for all proposed materials for the Engineer's review and approval. Include the brand name, stock number, description, size, rating, manufacturing specification, and applicable contract item number(s) on each submittal. Allow forty (40) days for submittal review. The Engineer will advise the Contractor of reasons for rejected submittals and will return approved submittals to the Contractor. Do not deliver material to the project prior to submittal approval.

For the work covered by this section, the term conduit applies to a system of components consisting of an outer duct, 4 inner ducts, internal spacers, special-purpose spin couplings and all necessary components, referred to as a multi-cell raceway system.

For the outer duct of RGC multi-cell raceway, use rigid galvanized conduit per UL 6 "Rigid Metallic Conduit" with rigid full weight galvanized threaded fittings. Provide factory

DocuSign Envelope ID: 1560E7E9-5A86-4A74-AE3A-80BFF48C90C9

installed reverse-spin couplings with 3 set screws, to allow assembly without turning the outer duct, and prevent the coupling from backing off before and after installation. Provide an O-ring gasket in the coupling body to resist pullout and to create a watertight seal. Provide pre-installed, smooth walled, pre-lubricated PVC inner ducts, with one white "tracer" duct and internal spacers to maintain alignment throughout the raceway system. Do not use materials provided by more than one manufacturer.

When deflection couplers are detailed on the plans, use deflection couplers that are designed for use with RGC multi-cell raceway, and meet all the requirements for RGC outer duct stated above. Provide deflection couplers that allow a 30 degree bend in any direction and ¾ inch mis-alignment in all axis. Provide factory installed reverse-spin couplings with 3 set screws, to allow assembly without turning the outer duct, and prevent the coupling from backing off before and after installation. Provide deflection couplers with a middle section consisting of a rubber boot attached by spin couplings and galvanized straps, with inner ducts that bend in unison with the rubber boot.

Use expansion joints that are designed for use with RGC multi-cell raceway, and meet the requirements for RGC outer duct stated above. Provide expansion joints that allow 8 inches of longitudinal movement. Use expansion joints consisting of a female end with a lead-in coupling body and spin coupling, an exterior sliding joint, and a fixed inner duct with an internal sliding joint. Provide expansion joints that have factory installed reverse-spin couplings with 3 set screws, to allow assembly without turning the outer duct and prevent the coupling from backing off before and after installation.

Use transition adapters that allow RGC raceway and PVC raceway to be coupled together while maintaining the same inner duct alignment. Provide adapters consisting of a threaded female adapter, an outer duct adapter, and a modified coupling body with a sleeve, thin wall couplings and an end spacer.

For the outer duct of PVC multi-cell raceway use schedule 40 PVC per UL 651 "Rigid Nonmetallic Conduit." Use PVC raceway with 6 inch bell ends and an O-ring gasket to resist pullout and provide a watertight seal. Provide PVC raceway having a print line that states "Install Print Line Up" to help facilitate correct installation. Use PVC raceway with pre-lubricated PVC inner ducts, with one white "tracer" duct and internal spacers to maintain alignment throughout the raceway system. Do not use material provided by more than one manufacturer.

Use terminations designed for PVC raceway, to seal each inner duct and the outer duct, and to provide watertight protection.

Use schedule 40 PVC for sleeves in accordance with UL 651 "Rigid Nonmetallic Conduit."

Provide concrete inserts made of galvanized malleable iron, with internal threads for suspending loads from a fixed point beneath a concrete ceiling or deck where no lateral adjustment is required. Use inserts that can be secured to the concrete forms, preventing movement during concrete placement.

DocuSign Envelope ID: 1560E7E9-5A86-4A74-AE3A-80BFF48C90C9

For stabilizers and hangers, use galvanized rods that conform to ASTM-A36 or A-575. Galvanized rods may be threaded on both ends or threaded continuously. Use steel stabilizer clamps and attachment brackets, sized as noted in the plans and hot dipped galvanized per ASTM-A123. Provide high strength bolts, nuts and washers that are galvanized in accordance with Article 1072-5 of the Standard Specifications.

Use adjustable clevis-type pipe hangers that allow for vertical adjustment and limited movement of the pipe. Use galvanized pipe hangers that are listed with Underwriters Laboratories, or are Factory Mutual approved for the size conduit shown in the plans. Use hangers that comply with Federal Specification WW-H-171E Type 1 and Manufacturers Standardization Society SP-69 Type 1. Plastic-coat the saddle area of the hanger.

Provide pull lines specifically designed for pulling rope through conduit. Use pull lines made of 2-ply line, with a tensile strength of 240 pounds minimum. Use rot and mildew resistant pull lines that are resistant to tangling when being dispensed.

Use mastic that is a permanent, non-hardening, water sealing compound that adheres to metal, plastic, and concrete.

Provide jute that is a burlap-like material used for filling voids and protecting components from waterproofing and adhesive compounds.

Provide zinc rich paint conforming to Section 1080-9 of the Standard Specifications.

3.0 INSTALLATION

To ensure against corrosion in the area where hot dipped galvanizing has been damaged, cover all raw metal surfaces with a cold galvanized, zinc rich paint.

Stub the raceway out at an accessible location and seal with termination kits designed specifically for that purpose. Use termination kits of the same material as the raceway.

Install Stabilizers as shown on the plans to assure proper movement of the conduit expansion joints. Securely fasten the clamps with attachment brackets and stabilizer rods to the conduit at the indicated locations to assure these locations remain stationary. Install the stabilizer rods parallel to the alignment of the conduit, and tilt rod upward at an orientation of 45 degrees to the bottom of the bridge deck.

Insert a pull line in each inner duct with sufficient slack for future use.

Securely fasten all components to prevent movement during concrete placement.

Smooth all sleeve ends and make them flush with surrounding concrete surfaces. Remove burrs and rough edges by filing or grinding. A torch may be used to cut the ends of metal sleeves. Use shields to protect all surfaces during torch-cutting operations.

Place backfill in accordance with Section 300-7 of the Standard Specifications.

DocuSign Envelope ID: 1560E7E9-5A86-4A74-AE3A-80BFF48C90C9

Fill the space between the raceway and the sleeve with mastic and jute. Install the mastic with a minimum distance of 2 inches at each end of the sleeve and the remaining interior space filled with jute. Finish the mastic by making it smooth and flush with the concrete.

Coordinate electrical conduit system work with work by others, and allow installation of circuitry or fiber optic cables during the construction process as directed by the Engineer.

Ensure that the concrete inserts are in the proper position and installed correctly, including when they are located in prestressed concrete deck panels.

Keep the raceway system clean of all debris during construction, with the completed system clean and ready for installation of circuitry or fiber optic cables.

The Engineer must inspect and approve all work before concealment.

4.0 BASIS OF PAYMENT

No direct measurement will be made for the conduit system, since it will be paid for on a lump sum basis.

Payment for the conduit system will be made at the contract lump sum price for "Electrical Conduit System for Signals at station 15+75.56 -Y1-".

Such price and payment for the conduit system as provided above will be considered full compensation for all materials, equipment, and labor necessary to complete the work in accordance with the plans and these special provisions.

Payment will be made under:

Electrical Conduit System for Signals at station 15+75.56 -Y1-	Lump Sum

DISC BEARINGS (2-3-14)

1.0 GENERAL

This item consists of furnishing, fabrication and installation of disc bearings in accordance with AASHTO LRFD Bridge Design Specifications, the Standard Specifications, the recommendations of the manufacturer, the details shown on the plans and as specified herein. Disc Bearings consist of a polyether urethane structural element (elastomeric disc) confined by upper and lower steel bearing plates. Equip disc bearings with a shear restriction mechanism (shear pin) to prevent movement of the disc. Supply disc bearings as fixed bearings and guided expansion bearings as designated by the Contract Documents.

Fixed disc bearings allow rotation but no longitudinal or transverse movement in the bearing plane. Fixed bearings consist of a steel sole plate, an elastomeric disc, a shear pin, a steel

DocuSign Envelope ID: 1560E7E9-5A86-4A74-AE3A-80BFF48C90C9

upper bearing plate, a steel lower bearing plate, a steel masonry plate, a preformed bearing pad, anchor bolts, nuts and washers.

Guided expansion disc bearings allow rotation and only longitudinal movement in the bearing plane. Guided expansion disc bearings consist of a steel sole plate, a polished stainless steel sheet welded to the bottom of the sole plate within the sliding region, a steel upper bearing plate, a layer of virgin polytetrafluoroethylene (PTFE) material bonded to the top and sides of the upper plate within the sliding regions, guide bars welded to the bottom of the sole plate surrounding the sliding region to restrict transverse movement, polished stainless steel sheets welded to the sides of the guide bars within the sliding regions, an elastomeric disc, a shear pin, a steel lower bearing plate, a steel masonry plate, a preformed bearing pad, anchor bolts, nuts, washers, pipe sleeves, a closure plate, grout and various sizes of standard pipe, and any other necessary material as detailed on the plans. Align the stainless steel sheet on the bottom of the sole plate with the PTFE material on the top of the upper bearing plate. Align the PTFE material on the sides of the upper bearing plate with the stainless steel sheets on the sides of the guide bars.

2.0 MATERIALS

Use disc bearings produced by the same manufacturer.

Use AASHTO M270 Grade 50W (345W) or Grade 50 (345) for all steel plates except the stainless steel sheets in the disc bearings. Clean, coat, and seal the plates in the disc bearing assemblies except for the areas with special facings and the areas that come in contact with the elastomer disc, in accordance with the Special Provision for “Thermal Sprayed Coatings (Metallization)”. The surfaces shall be coated to a thickness of 8 mils minimum on all external parts. Repair surfaces that are abraded or damaged after the application of metallizing in accordance with the Special Provision for “Thermal Sprayed Coatings (Metallization)”.

Provide anchor bolts and nuts in accordance with the Standard Specifications.

When the maximum plan dimension of the sheet is 12" or less, provide a stainless steel sheet in expansion disc bearings that is at least 16 gage or 1/16". When the maximum plan dimension is greater than 12", provide a stainless steel sheet that is at least 11 gage or 1/8". Ensure that all stainless steel sheets are in conformance with ASTM A240/A167 Type 304 and polished to a minimum #8 mirror surface finish.

Blast clean the surfaces of the steel sole plate and the steel guide bars that will be attached to the stainless steel sheets to a near white condition in accordance with the Standard Specifications. Position and clamp the back of the stainless steel sheets in contact with the steel sole plate and the steel guide bars. Apply the stainless steel sheets to the blast cleaned surfaces of the steel sole plate and the steel guide bars as soon as possible after blasting and before any visible oxidation of the blast cleaned surfaces occurs. Weld the stainless steel sheets continuously around the perimeter using a tungsten inert gas, wire-fed welder.

For the PTFE sheets bonded to the top and side sliding surfaces of the steel upper bearing plate, used as mating surfaces for the stainless steel sheets attached to the steel sole plate and

DocuSign Envelope ID: 1560E7E9-5A86-4A74-AE3A-80BFF48C90C9

the guide bars, provide an unfilled virgin PTFE sheet (recessed) or a glass-fiber filled PTFE sheet, resulting from skiving billets formed under hydraulic pressure and heat. Provide resin that conforms to the requirements of ASTM D4894 or D4895.

To bond the PTFE sheets and the steel upper bearing plate, use heat cured high temperature epoxy capable of withstanding temperature of –320°F to 500°F.

Weld the guide bars in expansion bearings to the bottom of the sole plate. Alternatively, integrate the guide bars and sole plate from the same piece of steel, ensuring that the required dimensions are provided. Provide 1/16" clearances between the stainless steel sheets attached to the side sliding surfaces of the guide bars and the PTFE sheet attached to the side sliding surface of the steel upper bearing plate.

Mold the polyether urethane structural element (elastomeric disc) from a polyether urethane compound. The top and bottom surfaces of the disc shall be roughened. Ensure that the physical properties of the polyether urethane conform to the following requirements:

Physical Property	ASTM Test Method	Requirements Min.	Max.
Hardness, Type D Durometer	D2240	60	64
Tensile Stress psi At 100% elongation At 200% elongation	D412	 2000 3700	- - - -
Tensile Strength psi	D412	5000	- - - -
Ultimate Elongation %	D412	220	- - - -
Compression Set % 22 hrs. at 158°F	D395	- - - -	40

3.0 DESIGN

Design the disc bearings for the loads and movements shown on the contract plans. However, use the anchor bolt size, length, spacing and masonry plate thickness as shown on the contract plans and provide an overall bearing height within ½ inch of the bearing assembly height shown on the contract plans. Either combine and cast the sole plate and upper bearing plate (for fixed bearings), the sole plate and guide bars (for expansion bearings), and the lower bearing plate and masonry plate (for fixed and expansion bearings) as a single unit or weld together prior to the installation of the disc.

Ensure access and removal of anchor bolt nut is not in conflict with the upper bearing plate, guide bars or sole plate.

DocuSign Envelope ID: 1560E7E9-5A86-4A74-AE3A-80BFF48C90C9

When designing the bearings, use the following allowable bearing stresses:

- On polyether urethane structural element: 5000 psi
- On PTFE Sliding Surface, filled or unfilled PTFE (recessed): 3500 psi

Submit eight sets of shop drawings and one set of design calculations for review, comments and acceptance. Have a North Carolina Registered Professional Engineer check and seal the shop drawings and design calculations.

After the Engineer reviews the drawings and, if necessary, corrections are made, submit one 22" x 34" reproducible set of the working drawings.

4.0 SAMPLING AND TESTING

A. Sampling

The manufacturer is responsible for randomly selecting and testing sample bearings from completed lots of bearings. The manufacturer is also responsible for certifying that the completed bearings and their components have been tested and are in compliance with the requirements of this Special Provision. The manufacturer shall furnish the results of the tests to the Materials and Tests Engineer.

B. Testing

1. Proof Load Test

   Load a test bearing to 150% of the bearing's rated design capacity and simultaneously subject it to a rotational range of 0.02 radians (1.146°) for a period of 1 hour.

   Have the bearing visually examined both during the test and upon disassembly after the test. Any resultant visual defects, such as extruded or deformed elastomer or PTFE, damaged seals or rings, or cracked steel is cause for rejection.

   Keep continuous and uniform contact between the polyether urethane element and the bearing plates and between the stainless steel sheets and the PTFE sheets (for expansion bearings) for the duration of the test. Any observed lift-off or separation is cause for rejection.

2. Sliding Coefficient of Friction

   For all guided expansion bearings, measure the sliding coefficient of friction at the bearing's design capacity in accordance with the test method described below, and on the fifth and fiftieth cycles, at a sliding speed of 1 in/min.

   Calculate the sliding coefficient of friction as the horizontal load required to maintain continuous sliding of one bearing, divided by the bearing's vertical design capacity.

   The test results are evaluated as follows:

DocuSign Envelope ID: 1560E7E9-5A86-4A74-AE3A-80BFF48C90C9

- A maximum measured sliding coefficient of friction of 3%.
- A visual examination both during and after the test. Any resultant visual defects, such as bond failure, physical destruction, cold flow of PTFE to the point of debonding, or damaged components is cause for rejection of the lot.

Using undamaged test bearings in the work is permitted.

3. Test Method

The test method and equipment shall meet the following requirements:

a. Arrange the test to determine the coefficient of friction on the first movement of the manufactured bearing.

b. Clean the bearing surface prior to testing.

c. Conduct the test at maximum working stress for the PTFE surface with the test load applied continuously for 12 hours prior to measuring friction.

d. Determine the first movement static and dynamic coefficient of friction of the test bearing at a sliding speed of less than 1 in/min, not to exceed:
   0.04 unfilled PTFE
   0.08 filled PTFE

e. Subject the bearing specimen to 100 movements of at least 1 inch of relative movement and, if the test facility permits, the full design movement at a speed of less than 1 ft/min. Following this test determine the static and kinetic coefficient of friction again. The specimen is considered a failure if it exceeds the values measured in (d) above or if it shows any signs of bond failure or other defects.

Bearings represented by test specimens passing the above requirements are approved for use in the structure subject to on-site inspection for visible defects.

5.0 INSTALLATION

Store disc bearings delivered to the bridge site upright and under cover on a platform above the ground surface. Protect the bearings from injury at all times and, before placing the bearings, dry and clean all dirt, oil, grease or other foreign substances from the bearing. Do not disassemble the bearings during installation, except at the manufacturer's direction. Lift bearing assemblies by their bottom surfaces only, unless lifting brackets that have been designed and approved by the manufacturer are used. Ensure that the polyether urethane disc is not exposed to direct flame or sparks. Place the bearings in accordance with the recommendations of the manufacturer, Contract Drawings, and as directed by the Engineer. If there is any discrepancy between the recommendations of the manufacturer, Special Provisions, and Contract Drawings, the Engineer is the sole judge in reconciling any such discrepancy.

DocuSign Envelope ID: 1560E7E9-5A86-4A74-AE3A-80BFF48C90C9

Provide preformed bearing pads under the masonry plates in accordance with Article 1079-1 of the Standard Specifications.

Do not install any bearing before the Engineer approves it.

6.0 BASIS OF PAYMENT

Payment for all disc bearings will be at the lump sum contract price bid for "Disc Bearings" which includes full compensation for furnishing all disc bearings, labor, materials, tools, equipment, testing and incidentals required to complete the work in accordance with the Standard Specifications, this Special Provision, the manufacturer's requirements and as directed by the Engineer.

THERMAL SPRAYED COATINGS (METALLIZATION) (9-30-11)

1.0 DESCRIPTION

Apply a thermal sprayed coating (TSC) and sealer to metal surfaces as specified herein when called for on the plans or by other Special Provisions, or when otherwise approved by the Engineer in accordance with the SSPC-CS 23.00/AWS C2.23/NACE No. 12 Specification. Only Arc Sprayed application methods are used to apply TSC coatings, the Engineer must approve other methods of application.

2.0 QUALIFICATIONS

Only use NCDOT approved TSC Contractors meeting the following requirements:

1. The capability of blast cleaning steel surfaces to SSPC SP-5 and SP-10 Finishes.

2. Employ Spray Operator(s) qualified in accordance with AWS C.16/C2.16M2002 and Quality Control Inspector(s) who have documented training in the applicable test procedures of ASTM D-3276 and SSPC-CS 23.00.

A summary of the contractor's related work experience and the documents verifying each Spray Operator's and Quality Control Inspector's qualifications are submitted to the Engineer before any work is performed.

3.0 MATERIALS

Provide wire in accordance with the metallizing equipment manufacturer's recommendations. Use the wire alloy specified on the plans which meets the requirements in Annex **C** of the SSPC-CS 23.00 Specification. Have the contractor provide a certified analysis (NCDOT Type 2 Certification) for each lot of wire material.

DocuSign Envelope ID: 1560E7E9-5A86-4A74-AE3A-80BFF48C90C9

Apply an approved sealer to all metallized surfaces in accordance with Section 9 of SSPC-CS 23. The sealer must either meet SSPC Paint 27 or is an alternate approved by the Engineer.

4.0 SURFACE PREPARATION AND TSC APPLICATION

Grind flame cut edges to remove the carbonized surface prior to blasting. Bevel all flame cut edges in accordance with Article 442-10(D) regardless of included angle. Blast clean surfaces to be metallized with grit or mineral abrasive in accordance with Steel Structures Painting Council SSPC SP-5/10(as specified) to impart an angular surface profile of 2.5 - 4.0 mils. Surface preparation hold times are in accordance with Section 7.32 of SSPC-CS 23. If flash rusting occurs prior to metallizing, blast clean the metal surface again. Apply the thermal sprayed coating only when the surface temperature of the steel is at least 5°F above the dew point.

At the beginning of each work period or shift, conduct bend tests in accordance with Section 6.5 of SSPC-CS 23.00. Any disbonding or delamination of the coating that exposes the substrate requires corrective action, additional testing, and the Engineer's approval before resuming the metallizing process.

Apply TSC with the alloy to the thickness specified on the plans or as provided in the table below. All spot results (the average of 3 to 5 readings) must meet the minimum requirement. No additional tolerance (as allowed by SSPC PA-2) is permitted. (For Steel Beams: For pieces with less than 200 ft^2 measure 2 spots/surface per piece and for pieces greater than 200 ft^2 add 1 additional spots/surface for each 500 ft^2).

Application	Thickness	Alloy	Seal Coat
Pot Bearings	8 mil	85/15 Zinc (W-Zn-Al-2)	0.5 mil
Armored Joint Angles	8 mil	85/15 Zinc (W-Zn-Al-2)	0.5 mil
Modular Joints	8 mil	99.99% Zn (W-Zn-1)	0.5 mil
Expansion Joint Seals	8 mil	99.99% Zn (W-Zn-1)	0.5 mil
Optional Disc Bearings	8 mil	85/15 Zinc (W-Zn-Al-2)	0.5 mil

When noted on the plans or as specified in the above chart, apply the sealer to all metallized surfaces in accordance with the manufacturer's recommendations and these provisions. Apply the seal coat only when the air temperature is above 40°F and the surface temperature of the steel is at least 5°F above the dew point. If the sealer is not applied within eight hours after the final application of TSC, the applicator verifies acceptable TSC surfaces and obtains approval from the Engineer before applying the sealer.

DocuSign Envelope ID: 1560E7E9-5A86-4A74-AE3A-80BFF48C90C9

5.0 INSPECTION FREQUENCY

The TSC Contractor must conduct the following tests at the specified frequency and the results documented in a format approved by the Engineer.

DocuSign Envelope ID: 1560E7E9-5A86-4A74-AE3A-80BFF48C90C9

Test/Standard	Location	Frequency	Specification
Ambient Conditions	Site	Each Process	5°F above the dew point
Abrasive Properties	Site	Each Day	Size, angularity, cleanliness
Surface Cleanliness SSPC Vis 1	All Surfaces	Visual All Surfaces	SSPC-SP-10 Atmospheric Service SSPC-SP - 5 Immersion Service
Surface Profile ASTM D-4417 Method C	Random Surfaces	3 per 500 ft^2	2.5 - 4.0 mils
Bend Test SSPC-CS 23.00	Site	5 per shift	Pass Visual
Thickness SSPC PA-2R SSPC-CS 23.00	Each Surface	Use the method in PA-2 Appendix 3 for Girders and Appendix 4 for frames and miscellaneous steel. See Note 1.	Zn - 8 mils minimum Al - 8 mils minimum Zn Al - 8 mils minimum Areas with more than twice the minimum thickness are inspected for compliance to the adhesion and cut testing requirements of this specification.
Adhesion ASTM 4541	Random Surfaces Splice Areas	1 set of 3 per 500 ft^2	Zn > 500 psi Al > 1000 psi Zn Al > 750 psi
Cut Test - SSPC-CS 23.00	Random Surfaces	3 sets of 3 per 500 ft^2	No peeling or delamination
Job Reference Std. SSPC-CS 23.00	Site	1 per job	Meets all the above requirements

6.0 REPAIRS

All Repairs are to be performed in accordance with the procedures below, depending on whether the repair surface is hidden or exposed. As an exception to the following, field welded splices on joint angles and field welding bearing plates to girders may be repaired in accordance with the procedures for hidden surfaces.

For hidden surfaces (including but not limited to interior girders, interior faces of exterior girders, and below-grade sections of piles):

1. Welding of metallized surfaces may be performed only if specifically permitted by the Engineer. Remove metallizing at the location of field welds by blast cleaning (SSPC SP-6

DocuSign Envelope ID: 1560E7E9-5A86-4A74-AE3A-80BFF48C90C9

finish), or hand (SSPC SP-2 finish) or power tool cleaning (SSPC SP-3 finish) just prior to welding. Clean sufficiently to prevent contamination of the weld. All repairs to welded connections are metallized in accordance with SSPC CS 23.00.

2. Minor areas less than or equal to 0.1 ft^2 exposing the substrate are metallized in accordance with SSPC CS 23.00 or painted in accordance with ASTM A780, "Repair of Damaged and Uncoated Areas of Hot Dip Galvanized Coatings."

3. Large areas greater than 0.1 ft^2 exposing the substrate are metallized in accordance with SSPC CS 23.00.

4. Damaged (burnished) areas not exposing the substrate with less than the specified coating thickness are metallized in accordance with SSPC CS 23.00 or painted in accordance with ASTM A780, "Repair of Damaged and Uncoated Areas of Hot Dip Galvanized Coatings."

5. Damaged (burnished) areas not exposing the substrate with more than the specified coating thickness are not repaired.

6. Defective coating is repaired by either method 2 or 3 depending on the area of the defect.

For Exposed Surfaces (including but not limited to exterior faces of exterior girders and above-grade sections of piles):

1. Welding of metallized surfaces may be performed only if specifically permitted by the Engineer. Remove metallization at the location of field welds by blast cleaning (SSPC SP-6 finish), or hand (SSPC SP-2 finish) or power tool cleaning (SSPC SP-3 finish) just prior to welding. Clean sufficiently to prevent contamination of the weld. All repairs to welded connections are metallized in accordance with SSPC CS 23.00.

2. All areas exposing the substrate are metallized in accordance with SSPC CS 23.00

3. Defective coating is repaired by either method 2 or 3 depending on the area of the defect.

7.0 TWELVE MONTH OBSERVATION PERIOD

The contractor maintains responsibility for the coating system for a twelve (12) month observation period beginning upon the satisfactory completion of all the work required in the plans or as directed by the engineer. The contractor must guarantee the coating system under the payment and performance bond (refer to Article 109-10). To successfully complete the observation period, the coating system must meet the following requirements after twelve(12) months service:

- No visible rust, contamination or application defect is observed in any coated area.
- Painted surfaces have a uniform color and gloss.
- Surfaces have an adhesion of no less than 500 psi when tested in accordance with ASTM D-4541.

DocuSign Envelope ID: 1560E7E9-5A86-4A74-AE3A-80BFF48C90C9

8.0 BASIS OF PAYMENT

The contract price bid for the bridge component to which the coating is applied will be full compensation for the thermal sprayed coating.

SAND LIGHTWEIGHT CONCRETE (9-30-11)

Use sand lightweight concrete, as noted on the plans, that meets the requirements of this Special Provision.

Sand lightweight concrete is composed of portland cement, fine aggregate, lightweight coarse aggregate, water, and admixtures. Provide sand lightweight concrete that complies with the applicable requirements of Sections 420, 1000, and 1024 of the Standard Specifications and the additional requirements herein.

Submit a mix design from a testing laboratory approved by the NC Division of Highways for approval at least 35 days prior to the proposed use. Provide a mix meeting Table 1000-1 of the Standard Specifications and the following design criteria:

TEST	TEST METHOD	REQUIREMENT
Max. Unit Weight, plastic, lbs/ft^3	AASHTO T121	120
Max. Unit Weight, dry, lbs/ft^3	ASTM C567 using equilibrium air dried unit weight	115
Min. Relative Dynamic Modulus, (percent)	AASHTO T161 Procedure A	80

When submitting the mix design, include the source of the aggregates, cement, and admixtures and the gradation, specific gravity and fineness modulus (fine aggregate only) of the aggregates. Submit test results showing the mix design conforms to the criteria, including the 28 day compressive strength of a minimum of six cylinders. Provide a mix design that produces an average compressive strength sufficient to ensure that a minimum strength of 4500 psi is achieved in the field.

Produce an additional mix in accordance with AASHTO M195 to determine the drying shrinkage. The maximum drying shrinkage for this mix is 0.07%.

For lightweight aggregate, use expanded shale or slate that meets the requirements of AASHTO M195. Grade the lightweight aggregate in accordance with 1014-2(E)(6).

DocuSign Envelope ID: 1560E7E9-5A86-4A74-AE3A-80BFF48C90C9

Determine the soundness in accordance with AASHTO T104. Loss of more than 10% of the lightweight aggregate in five cycles of the accelerated soundness test using sodium sulfate is not permitted.

Ensure the lightweight aggregate is in a saturated surface-dry condition when it is proportioned and incorporated into the mix.

EXPANSION JOINT SEALS (9-30-11)

1.0 GENERAL

The work covered by this Special Provision consists of furnishing and installing the expansion joint seals as shown on the contract drawings. All materials, labor, equipment and incidentals necessary for the proper installation of the expansion joint seals are included.

2.0 MATERIAL

Provide expansion joint seals capable of accommodating a total movement measured parallel to the centerline of the roadway as shown on plans.

Provide an elastomeric component for each expansion joint seal that is a continuous unit for the entire length of the joint. Do not field splice the elastomeric component. Only vulcanized shop splicing of the elastomeric component is permitted. The minimum length of an elastomeric component before shop splicing is 20 feet. However, one piece shorter than 20 feet is permitted. Provide an elastomeric component that is clearly shop marked to indicate the top side and joint location of the elastomeric component. On skewed bridges, or under unsymmetrical conditions, clearly mark the left side of the elastomeric component. Left is defined as being on the left when facing in the direction of increasing station. Inspect the seals upon receipt to ensure that the marks are clearly visible upon installation.

Make sure the convolution of the gland does not project above the top of the hold-down plates when the joint opening is in the most compressed condition. Use either elastic polychloroprene (neoprene) or ethyl propylene diene monomer (EPDM) for the elastomer that meets the following minimum properties:

DocuSign Envelope ID: 1560E7E9-5A86-4A74-AE3A-80BFF48C90C9

	ASTM TEST METHOD	REQUIREMENTS
Hardness, Durometer - Shore A	D2240	60 ± 5, Neoprene (upward corrugated shape - fabric reinforced) 75 ± 5, EPDM and Neoprene (upward non-corrugated shape) 80 ± 5, EPDM (upward corrugated shape-fabric reinforced)
Tensile Strength	D412	2000 psi (min.)
Elongation at Break	D412	250% (min.)
Width of Gland in Relaxed Condition	N/A	10" ± 0.25"

Thickness of Upturned portion of gland	N/A	0.25" non-corrugated shape, -0.032" to +0.032"
Thickness of Upturned portion of gland	N/A	0.1875" corrugated shape, -0.032" to +0.032"
Thickness of Flat portion of gland	N/A	0.1563", -0.032" to +0.032"

For fabric reinforced glands, submit one unreinforced sample per lot number, up to 500 feet of Expansion Joint Seal, to the Engineer for testing.

Only field splice hold-down plates at crown points, at abrupt changes in the deck slab cross slope, and on lane lines. Splicing within travel lanes is not permitted and splicing on edge lines is not required. Field splice hold-down plates between the edge line and gutter upturn and where necessary for proper installation and alignment is permitted. Show all splice locations on the working drawings for approval. For the location of lane markings at the expansion joint seal, see the Structure plans. At the splice locations, locate the hold-down bolts 3 inches from the end of the hold-down plate. At splice locations where changes in deck slab cross slope occur, cut the ends of hold-down plates parallel to the bridge centerline for skews less than 80° and greater than 100°.

Do not use welded shop splices in hold-down plates.

3.0 SHOP DRAWINGS

Submit nine sets of working drawings to the Engineer for review, comments and acceptance. Show complete details drawn to scale and include:

DocuSign Envelope ID: 1560E7E9-5A86-4A74-AE3A-80BFF48C90C9

- The proposed template details including the makeup of the template
- The proposed method of holding the base angle assembly in place while concrete is cast around it
- The proposed procedure to correct for the effects of beam movement and rotation when setting width of joint opening
- The proposed chronology of installation including the sequence and direction of the concrete casting
- The details of cross connectors between base angles, such as steel bars with slots bolted to angles, to maintain evenness between the adjacent base angles while accommodating movement that occurs when concrete is cast. Indicate when bolts are loosened to allow movement.
- The proposed method for removing the hold-down plate
- A section detail through the joint showing horizontal offset dimensions of the base angles from the centerline joint. This detail is required when the vertical face of the joint opening is not perpendicular to the roadway surface (e.g. when the roadway grade is significant).

Have someone other than the one who prepares the drawing check all detailed drawings and include the signatures of both the drafter and checker on each sheet of the drawings. The Engineer returns unchecked drawings to the Contractor. Provide all completed drawings well in advance of the scheduled installation time for the expansion joint seal.

4.0 INSTALLATION

Provide supports for the base angle assembly at a maximum spacing of 9 feet. Place supports near field splices of base angles to ensure that field splices are straight and even. Provide base angles with ½" diameter weep holes at 12 inch centers to allow bleeding of trapped air and/or water. Do not obstruct the weep holes with falsework. Make the bottom of the trough parallel to grade and the sides parallel to the sides of the expansion joint seal.

For damaged areas, depressions, spalls, cracks, or irregularities of curbs or decks adjacent to the expansion joint, submit a proposed method of repair and repair material specifications for approval.

If the Engineer deems any aspects of the expansion joint seals unacceptable, make necessary corrections.

5.0 INSPECTION

When concrete is cast, use a non-aluminum, 10 foot, true to line straight edge to check and grade the top of the slab on each side of the joint to ensure smooth transition between spans.

Watertight Integrity Test

- Upon completion of an expansion joint seal, perform a water test on the top surface to detect any leakage. Cover the roadway section of the joint from curb to curb, or

DocuSign Envelope ID: 1560E7E9-5A86-4A74-AE3A-80BFF48C90C9

barrier rail to barrier rail, with water, either ponded or flowing, not less than 1 inch above the roadway surface at all points. Block sidewalk sections and secure an unnozzled water hose delivering approximately 1 gallon of water per minute to the inside face of the bridge railing, trained in a downward position about 6 inches above the sidewalks, such that there is continuous flow of water across the sidewalk and down the curb face of the joint.

- Maintain the ponding or flowing of water on the roadway and continuous flow across sidewalks and curbs for a period of 5 hours. At the conclusion of the test, the underside of the joint is closely examined for leakage. The expansion joint seal is considered watertight if no obvious wetness is visible on the Engineer's finger after touching a number of underdeck areas. Damp concrete that does not impart wetness to the finger is not a sign of leakage.
- If the joint system leaks, locate the place(s) of leakage and take any repair measures necessary to stop the leakage at no additional cost to the Department. Use repair measures recommended by the manufacturer and approved by the Engineer prior to beginning corrective work.
- If measures to eliminate leakage are taken, perform a subsequent water integrity test subject to the same conditions as the original test. Subsequent tests carry the same responsibility as the original test and are performed at no extra cost to the Department.

6.0 BASIS OF PAYMENT

Basis of payment for all expansion joint seals will be at the lump sum contract price for "Expansion Joint Seals" which price and payment will be full compensation for furnishing all material, including any steel accessory plates for sidewalks, medians and rails, labor, tools, and incidentals necessary for installing the expansion joint seal in place and including all materials, labor, tools and incidentals for performing the original watertight integrity test.

FALSEWORK AND FORMWORK (4-5-12)

1.0 DESCRIPTION

Use this Special Provision as a guide to develop temporary works submittals required by the Standard Specifications or other provisions; no additional submittals are required herein. Such temporary works include, but are not limited to, falsework and formwork.

Falsework is any temporary construction used to support the permanent structure until it becomes self-supporting. Formwork is the temporary structure or mold used to retain plastic or fluid concrete in its designated shape until it hardens. Access scaffolding is a temporary structure that functions as a work platform that supports construction personnel, materials, and tools, but is not intended to support the structure. Scaffolding systems that are used to temporarily support permanent structures (as opposed to functioning as work platforms) are considered to be falsework under the definitions given. Shoring is a component of falsework

DocuSign Envelope ID: 1560E7E9-5A86-4A74-AE3A-80BFF48C90C9

such as horizontal, vertical, or inclined support members. Where the term "temporary works" is used, it includes all of the temporary facilities used in bridge construction that do not become part of the permanent structure.

Design and construct safe and adequate temporary works that will support all loads imposed and provide the necessary rigidity to achieve the lines and grades shown on the plans in the final structure.

2.0 MATERIALS

Select materials suitable for temporary works; however, select materials that also ensure the safety and quality required by the design assumptions. The Engineer has authority to reject material on the basis of its condition, inappropriate use, safety, or nonconformance with the plans. Clearly identify allowable loads or stresses for all materials or manufactured devices on the plans. Revise the plan and notify the Engineer if any change to materials or material strengths is required.

3.0 DESIGN REQUIREMENTS

A. Working Drawings

Provide working drawings for items as specified in the contract, or as required by the Engineer, with design calculations and supporting data in sufficient detail to permit a structural and safety review of the proposed design of the temporary work.

On the drawings, show all information necessary to allow the design of any component to be checked independently as determined by the Engineer.

When concrete placement is involved, include data such as the drawings of proposed sequence, rate of placement, direction of placement, and location of all construction joints. Submit the number of copies as called for by the contract.

When required, have the drawings and calculations prepared under the guidance of, and sealed by, a North Carolina Registered Professional Engineer who is knowledgeable in temporary works design.

If requested by the Engineer, submit with the working drawings manufacturer's catalog data listing the weight of all construction equipment that will be supported on the temporary work. Show anticipated total settlements and/or deflections of falsework and forms on the working drawings. Include falsework footing settlements, joint take-up, and deflection of beams or girders.

As an option for the Contractor, overhang falsework hangers may be uniformly spaced, at a maximum of 36 inches, provided the following conditions are met:

Member Type	Member	Max. Overhang Width,	Max. Slab Edge	Max. Screed Wheel Weight, (lbs.)	Bracket Min. Vertical Leg

DocuSign Envelope ID: 1560E7E9-5A86-4A74-AE3A-80BFF48C90C9

(PCG)	Depth, (inches)	(inches)	Thickness, (inches)		Extension, (inches)
II	36	39	14	2000	26
III	45	42	14	2000	35
IV	54	45	14	2000	44
MBT	63	51	12	2000	50
MBT	72	55	12	1700	48

Overhang width is measured from the centerline of the girder to the edge of the deck slab.

For Type II, III & IV prestressed concrete girders (PCG), 45-degree cast-in-place half hangers and rods must have a minimum safe working load of 6,000 lbs.

For MBT prestressed concrete girders, 45-degree angle holes for falsework hanger rods shall be cast through the girder top flange and located, measuring along the top of the member, 1'-2 ½" from the edge of the top flange. Hanger hardware and rods must have a minimum safe working load of 6,000 lbs.

The overhang bracket provided for the diagonal leg shall have a minimum safe working load of 3,750 lbs. The vertical leg of the bracket shall extend to the point that the heel bears on the girder bottom flange, no closer than 4 inches from the bottom of the member. However, for 72-inch members, the heel of the bracket shall bear on the web, near the bottom flange transition.

Provide adequate overhang falsework and determine the appropriate adjustments for deck geometry, equipment, casting procedures and casting conditions.

If the optional overhang falsework spacing is used, indicate this on the falsework submittal and advise the girder producer of the proposed details. Failure to notify the Engineer of hanger type and hanger spacing on prestressed concrete girder casting drawings may delay the approval of those drawings.

Falsework hangers that support concentrated loads and are installed at the edge of thin top flange concrete girders (such as bulb tee girders) shall be spaced so as not to exceed 75% of the manufacturer's stated safe working load. Use of dual leg hangers (such as Meadow Burke HF-42 and HF-43) are not allowed on concrete girders with thin top flanges. Design the falsework and forms supporting deck slabs and overhangs on girder bridges so that there will be no differential settlement between the girders and the deck forms during placement of deck concrete.

When staged construction of the bridge deck is required, detail falsework and forms for screed and fluid concrete loads to be independent of any previous deck pour components when the mid-span girder deflection due to deck weight is greater than ¾".

DocuSign Envelope ID: 1560E7E9-5A86-4A74-AE3A-80BFF48C90C9

Note on the working drawings any anchorages, connectors, inserts, steel sleeves or other such devices used as part of the falsework or formwork that remains in the permanent structure. If the plan notes indicate that the structure contains the necessary corrosion protection required for a Corrosive Site, epoxy coat, galvanize or metalize these devices. Electroplating will not be allowed. Any coating required by the Engineer will be considered incidental to the various pay items requiring temporary works.

Design falsework and formwork requiring submittals in accordance with the 1995 AASHTO *Guide Design Specifications for Bridge Temporary Works* except as noted herein.

1. Wind Loads

Table 2.2 of Article 2.2.5.1 is modified to include wind velocities up to 110 mph. In addition, Table 2.2A is included to provide the maximum wind speeds by county in North Carolina.

Table 2.2 - Wind Pressure Values

Height Zone feet above ground	Pressure, lb/ft^2 for Indicated Wind Velocity, mph				
	70	80	90	100	110
0 to 30	15	20	25	30	35
30 to 50	20	25	30	35	40
50 to 100	25	30	35	40	45
over 100	30	35	40	45	50

2. Time of Removal

The following requirements replace those of Article 3.4.8.2.

Do not remove forms until the concrete has attained strengths required in Article 420-16 of the Standard Specifications and these Special Provisions.

Do not remove forms until the concrete has sufficient strength to prevent damage to the surface.

DocuSign Envelope ID: 1560E7E9-5A86-4A74-AE3A-80BFF48C90C9

Table 2.2A - Steady State Maximum Wind Speeds by Counties in North Carolina

COUNTY	25 YR (mph)	COUNTY	25 YR (mph)	COUNTY	25 YR (mph)
Alamance	70	Franklin	70	Pamlico	100
Alexander	70	Gaston	70	Pasquotank	100
Alleghany	70	Gates	90	Pender	100
Anson	70	Graham	80	Perquimans	100
Ashe	70	Granville	70	Person	70
Avery	70	Greene	80	Pitt	90
Beaufort	100	Guilford	70	Polk	80
Bertie	90	Halifax	80	Randolph	70
Bladen	90	Harnett	70	Richmond	70
Brunswick	100	Haywood	80	Robeson	80
Buncombe	80	Henderson	80	Rockingham	70
Burke	70	Hertford	90	Rowan	70
Cabarrus	70	Hoke	70	Rutherford	70
Caldwell	70	Hyde	110	Sampson	90
Camden	100	Iredell	70	Scotland	70
Carteret	110	Jackson	80	Stanley	70
Caswell	70	Johnston	80	Stokes	70
Catawba	70	Jones	100	Surry	70
Cherokee	80	Lee	70	Swain	80
Chatham	70	Lenoir	90	Transylvania	80
Chowan	90	Lincoln	70	Tyrell	100
Clay	80	Macon	80	Union	70
Cleveland	70	Madison	80	Vance	70
Columbus	90	Martin	90	Wake	70
Craven	100	McDowell	70	Warren	70
Cumberland	80	Mecklenburg	70	Washington	100
Currituck	100	Mitchell	70	Watauga	70
Dare	110	Montgomery	70	Wayne	80
Davidson	70	Moore	70	Wilkes	70
Davie	70	Nash	80	Wilson	80
Duplin	90	New Hanover	100	Yadkin	70
Durham	70	Northampton	80	Yancey	70
Edgecombe	80	Onslow	100		

DocuSign Envelope ID: 1560E7E9-5A86-4A74-AE3A-80BFF48C90C9

Forsyth	70	Orange	70		

B. Review and Approval

The Engineer is responsible for the review and approval of temporary works' drawings.

Submit the working drawings sufficiently in advance of proposed use to allow for their review, revision (if needed), and approval without delay to the work.

The time period for review of the working drawings does not begin until complete drawings and design calculations, when required, are received by the Engineer.

Do not start construction of any temporary work for which working drawings are required until the drawings have been approved. Such approval does not relieve the Contractor of the responsibility for the accuracy and adequacy of the working drawings.

4.0 CONSTRUCTION REQUIREMENTS

All requirements of Section 420 of the Standard Specifications apply.

Construct temporary works in conformance with the approved working drawings. Ensure that the quality of materials and workmanship employed is consistent with that assumed in the design of the temporary works. Do not weld falsework members to any portion of the permanent structure unless approved. Show any welding to the permanent structure on the approved construction drawings.

Provide tell-tales attached to the forms and extending to the ground, or other means, for accurate measurement of falsework settlement. Make sure that the anticipated compressive settlement and/or deflection of falsework does not exceed 1 inch. For cast-in-place concrete structures, make sure that the calculated deflection of falsework flexural members does not exceed 1/240 of their span regardless of whether or not the deflection is compensated by camber strips.

A. Maintenance and Inspection

Inspect and maintain the temporary work in an acceptable condition throughout the period of its use. Certify that the manufactured devices have been maintained in a condition to allow them to safely carry their rated loads. Clearly mark each piece so that its capacity can be readily determined at the job site.

Perform an in-depth inspection of an applicable portion(s) of the temporary works, in the presence of the Engineer, not more than 24 hours prior to the beginning of each concrete placement. Inspect other temporary works at least once a month to ensure that they are functioning properly. Have a North Carolina Registered Professional Engineer inspect the cofferdams, shoring, sheathing, support of excavation structures, and support systems for load tests prior to loading.

DocuSign Envelope ID: 1560E7E9-5A86-4A74-AE3A-80BFF48C90C9

B. Foundations

Determine the safe bearing capacity of the foundation material on which the supports for temporary works rest. If required by the Engineer, conduct load tests to verify proposed bearing capacity values that are marginal or in other high-risk situations.

The use of the foundation support values shown on the contract plans of the permanent structure is permitted if the foundations are on the same level and on the same soil as those of the permanent structure.

Allow for adequate site drainage or soil protection to prevent soil saturation and washout of the soil supporting the temporary works supports.

If piles are used, the estimation of capacities and later confirmation during construction using standard procedures based on the driving characteristics of the pile is permitted. If preferred, use load tests to confirm the estimated capacities; or, if required by the Engineer conduct load tests to verify bearing capacity values that are marginal or in other high risk situations.

The Engineer reviews and approves the proposed pile and soil bearing capacities.

5.0 REMOVAL

Unless otherwise permitted, remove and keep all temporary works upon completion of the work. Do not disturb or otherwise damage the finished work.

Remove temporary works in conformance with the contract documents. Remove them in such a manner as to permit the structure to uniformly and gradually take the stresses due to its own weight.

6.0 METHOD OF MEASUREMENT

Unless otherwise specified, temporary works will not be directly measured.

7.0 BASIS OF PAYMENT

Payment at the contract unit prices for the various pay items requiring temporary works will be full compensation for the above falsework and formwork.

SUBMITTAL OF WORKING DRAWINGS (6-28-17)

1.0 GENERAL

Submit working drawings in accordance with Article 105-2 of the *Standard Specifications* and this provision. For this provision, "submittals" refers to only those listed in this provision. The list of submittals contained herein does not represent a list of required submittals for the project. Submittals are only necessary for those items as required by the

DocuSign Envelope ID: 1560E7E9-5A86-4A74-AE3A-80BFF48C90C9

contract. Make submittals that are not specifically noted in this provision directly to the Engineer. Either the Structures Management Unit or the Geotechnical Engineering Unit or both units will jointly review submittals.

If a submittal contains variations from plan details or specifications or significantly affects project cost, field construction or operations, discuss the submittal with and submit all copies to the Engineer. State the reason for the proposed variation in the submittal. To minimize review time, make sure all submittals are complete when initially submitted. Provide a contact name and information with each submittal. Direct any questions regarding submittal requirements to the Engineer, Structures Management Unit contacts or the Geotechnical Engineering Unit contacts noted below.

In order to facilitate in-plant inspection by NCDOT and approval of working drawings, provide the name, address and telephone number of the facility where fabrication will actually be done if different than shown on the title block of the submitted working drawings. This includes, but is not limited to, precast concrete items, prestressed concrete items and fabricated steel or aluminum items.

2.0 ADDRESSES AND CONTACTS

For submittals to the Structures Management Unit, use the following addresses:

Via US mail:

Mr. B. C. Hanks, P. E.
State Structures Engineer
North Carolina Department
of Transportation
Structures Management Unit
1581 Mail Service Center
Raleigh, NC 27699-1581

Attention: Mr. J. L. Bolden, P. E.

Via other delivery service:

Mr. B. C. Hanks, P. E.
State Structures Engineer
North Carolina Department
of Transportation
Structures Management Unit
1000 Birch Ridge Drive
Raleigh, NC 27610

Attention: Mr. J. L. Bolden, P. E.

Submittals may also be made via email.

Send submittals to:

jlbolden@ncdot.gov (James Bolden)

Send an additional e-copy of the submittal to the following address:

eomile@ncdot.gov (Emmanuel Omile)

mrorie@ncdot.gov (Madonna Rorie)

For submittals to the Geotechnical Engineering Unit, use the following addresses:

For projects in Divisions 1-7, use the following Eastern Regional Office address:

Via US mail:

Mr. Chris Kreider, P. E.

Via other delivery service:

Mr. Chris Kreider, P. E.

DocuSign Envelope ID: 1560E7E9-5A86-4A74-AE3A-80BFF48C90C9

Eastern Regional Geotechnical
Manager
North Carolina Department
of Transportation
Geotechnical Engineering Unit
Eastern Regional Office
1570 Mail Service Center
Raleigh, NC 27699-1570

Eastern Regional Geotechnical
Manager
North Carolina Department
of Transportation
Geotechnical Engineering Unit
Eastern Regional Office
3301 Jones Sausage Road, Suite 100
Garner, NC 27529

Via Email: EastGeotechnicalSubmittal@ncdot.gov

For projects in Divisions 8-14, use the following Western Regional Office address:

Via US mail or other delivery service:

Mr. Eric Williams, P. E.
Western Regional Geotechnical
Manager
North Carolina Department
of Transportation
Geotechnical Engineering Unit
Western Regional Office
5253 Z Max Boulevard
Harrisburg, NC 28075

Via Email: WestGeotechnicalSubmittal@ncdot.gov

The status of the review of structure-related submittals sent to the Structures Management Unit can be viewed from the Unit's website, via the "Drawing Submittal Status" link.

The status of the review of geotechnical-related submittals sent to the Geotechnical Engineering Unit can be viewed from the Unit's website, via the "Geotechnical Construction Submittals" link.

Direct any questions concerning submittal review status, review comments or drawing markups to the following contacts:

Primary Structures Contact:	James Bolden (919) 250 – 4082 facsimile jlbolden@ncdot.gov	(919) 707 – 6408
Secondary Structures Contacts:	Emmanuel Omile Madonna Rorie	(919) 707 – 6451 (919) 707 – 6508

Eastern Regional Geotechnical Contact (Divisions 1-7):
Chris Kreider (919) 662 – 4710
ckreider@ncdot.gov

DocuSign Envelope ID: 1560E7E9-5A86-4A74-AE3A-80BFF48C90C9

Western Regional Geotechnical Contact (Divisions 8-14):
Eric Williams (704) 455 – 8902
ewilliams3@ncdot.gov

3.0 SUBMITTAL COPIES

Furnish one complete copy of each submittal, including all attachments, to the Engineer. At the same time, submit the number of hard copies shown below of the same complete submittal directly to the Structures Management Unit and/or the Geotechnical Engineering Unit.

The first table below covers "Structure Submittals". The Engineer will receive review comments and drawing markups for these submittals from the Structures Management Unit. The second table in this section covers "Geotechnical Submittals". The Engineer will receive review comments and drawing markups for these submittals from the Geotechnical Engineering Unit.

Unless otherwise required, submit one set of supporting calculations to either the Structures Management Unit or the Geotechnical Engineering Unit unless both units require submittal copies in which case submit a set of supporting calculations to each unit. Provide additional copies of any submittal as directed.

STRUCTURE SUBMITTALS

Submittal	Copies Required by Structures Management Unit	Copies Required by Geotechnical Engineering Unit	Contract Reference Requiring Submittal [1]
Arch Culvert Falsework	5	0	Plan Note, SN Sheet & "Falsework and Formwork"
Box Culvert Falsework [7]	5	0	Plan Note, SN Sheet & "Falsework and Formwork"
Cofferdams	6	2	Article 410-4
Foam Joint Seals [6]	9	0	"Foam Joint Seals"
Expansion Joint Seals (hold down plate type with base angle)	9	0	"Expansion Joint Seals"

DocuSign Envelope ID: 1560E7E9-5A86-4A74-AE3A-80BFF48C90C9

Expansion Joint Seals (modular)	2, then 9	0	"Modular Expansion Joint Seals"
Expansion Joint Seals (strip seals)	9	0	"Strip Seals"
Falsework & Forms [2] (substructure)	8	0	Article 420-3 & "Falsework and Formwork"
Falsework & Forms (superstructure)	8	0	Article 420-3 & "Falsework and Formwork"
Girder Erection over Railroad	5	0	Railroad Provisions
Maintenance and Protection of Traffic Beneath Proposed Structure	8	0	"Maintenance and Protection of Traffic Beneath Proposed Structure at Station ___"
Metal Bridge Railing	8	0	Plan Note
Metal Stay-in-Place Forms	8	0	Article 420-3
Metalwork for Elastomeric Bearings [4,5]	7	0	Article 1072-8
Miscellaneous Metalwork [4,5]	7	0	Article 1072-8
Disc Bearings [4]	8	0	"Disc Bearings"
Overhead and Digital Message Signs (DMS) (metalwork and foundations)	13	0	Applicable Provisions
Placement of Equipment on Structures (cranes, etc.)	7	0	Article 420-20
Precast Concrete Box Culverts	2, then 1 reproducible	0	"Optional Precast Reinforced Concrete Box Culvert at Station ___"
Prestressed Concrete Cored Slab (detensioning sequences) [3]	6	0	Article 1078-11
Prestressed Concrete Deck Panels	6 and 1 reproducible	0	Article 420-3

DocuSign Envelope ID: 1560E7E9-5A86-4A74-AE3A-80BFF48C90C9

Prestressed Concrete Girder (strand elongation and detensioning sequences)	6	0	Articles 1078-8 and 1078-11
Removal of Existing Structure over Railroad	5	0	Railroad Provisions
Revised Bridge Deck Plans (adaptation to prestressed deck panels)	2, then 1 reproducible	0	Article 420-3
Revised Bridge Deck Plans (adaptation to modular expansion joint seals)	2, then 1 reproducible	0	"Modular Expansion Joint Seals"
Sound Barrier Wall (precast items)	10	0	Article 1077-2 & "Sound Barrier Wall"
Sound Barrier Wall Steel Fabrication Plans [5]	7	0	Article 1072-8 & "Sound Barrier Wall"
Structural Steel [4]	2, then 7	0	Article 1072-8
Temporary Detour Structures	10	2	Article 400-3 & "Construction, Maintenance and Removal of Temporary Structure at Station ____"
TFE Expansion Bearings [4]	8	0	Article 1072-8

FOOTNOTES

1. References are provided to help locate the part of the contract where the submittals are required. References in quotes refer to the provision by that name. Articles refer to the *Standard Specifications*.
2. Submittals for these items are necessary only when required by a note on plans.
3. Submittals for these items may not be required. A list of pre-approved sequences is available from the producer or the Materials & Tests Unit.
4. The fabricator may submit these items directly to the Structures Management Unit.
5. The two sets of preliminary submittals required by Article 1072-8 of the *Standard Specifications* are not required for these items.
6. Submittals for Fabrication Drawings are not required. Submittals for Catalogue Cuts of Proposed Material are required. See Section 5.A of the referenced provision.
7. Submittals are necessary only when the top slab thickness is 18" or greater.

DocuSign Envelope ID: 1560E7E9-5A86-4A74-AE3A-80BFF48C90C9

GEOTECHNICAL SUBMITTALS

Submittal	Copies Required by Geotechnical Engineering Unit	Copies Required by Structures Management Unit	Contract Reference Requiring Submittal [1]
Drilled Pier Construction Plans [2]	1	0	Subarticle 411-3(A)
Crosshole Sonic Logging (CSL) Reports [2]	1	0	Subarticle 411-5(A)(2)
Pile Driving Equipment Data Forms [2,3]	1	0	Subarticle 450-3(D)(2)
Pile Driving Analyzer (PDA) Reports [2]	1	0	Subarticle 450-3(F)(3)
Retaining Walls [4]	1 drawings, 1 calculations	2 drawings	Applicable Provisions
Temporary Shoring [4]	1 drawings, 1 calculations	2 drawings	"Temporary Shoring" & "Temporary Soil Nail Walls"

FOOTNOTES

1. References are provided to help locate the part of the contract where the submittals are required. References in quotes refer to the provision by that name. Subarticles refer to the *Standard Specifications*.

2. Submit one hard copy of submittal to the Engineer. Submit a second copy of submittal electronically (PDF via email), US mail or other delivery service to the appropriate Geotechnical Engineering Unit regional office. Electronic submission is preferred.

3. The Pile Driving Equipment Data Form is available from:
https://connect.ncdot.gov/resources/Geological/Pages/Geotech_Forms_Details.aspx
See second page of form for submittal instructions.

4. Electronic copy of submittal is required. See referenced provision.

CRANE SAFETY (8-15-05)

Comply with the manufacturer specifications and limitations applicable to the operation of any and all cranes and derricks. Prime contractors, sub-contractors, and fully operated rental

DocuSign Envelope ID: 1560E7E9-5A86-4A74-AE3A-80BFF48C90C9

companies shall comply with the current Occupational Safety and Health Administration regulations (OSHA).

Submit all items listed below to the Engineer prior to beginning crane operations involving critical lifts. A critical lift is defined as any lift that exceeds 75 percent of the manufacturer's crane chart capacity for the radius at which the load will be lifted or requires the use of more than one crane. Changes in personnel or equipment must be reported to the Engineer and all applicable items listed below must be updated and submitted prior to continuing with crane operations.

CRANE SAFETY SUBMITTAL LIST

A. **Competent Person:** Provide the name and qualifications of the "Competent Person" responsible for crane safety and lifting operations. The named competent person will have the responsibility and authority to stop any work activity due to safety concerns.

B. **Riggers:** Provide the qualifications and experience of the persons responsible for rigging operations. Qualifications and experience should include, but not be limited to, weight calculations, center of gravity determinations, selection and inspection of sling and rigging equipment, and safe rigging practices.

C. **Crane Inspections:** Inspection records for all cranes shall be current and readily accessible for review upon request.

D. **Certifications:** **By July 1, 2006**, crane operators performing critical lifts shall be certified by NC CCO (National Commission for the Certification of Crane Operators), or satisfactorily complete the Carolinas AGC's Professional Crane Operator's Proficiency Program. Other approved nationally accredited programs will be considered upon request. All crane operators shall also have a current CDL medical card. Submit a list of anticipated critical lifts and corresponding crane operator(s). Include current certification for the type of crane operated (small hydraulic, large hydraulic, small lattice, large lattice) and medical evaluations for each operator.

GROUT FOR STRUCTURES (9-30-11)

1.0 DESCRIPTION

This special provision addresses grout for use in pile blockouts, grout pockets, shear keys, dowel holes and recesses for structures. This provision does not apply to grout placed in post-tensioning ducts for bridge beams, girders, or decks. Mix and place grout in accordance with the manufacturer's recommendations, the applicable sections of the Standard Specifications and this provision.

DocuSign Envelope ID: 1560E7E9-5A86-4A74-AE3A-80BFF48C90C9

2.0 MATERIAL REQUIREMENTS

Use a Department approved pre-packaged, non-shrink, non-metallic grout. Contact the Materials and Tests Unit for a list of approved pre-packaged grouts and consult the manufacturer to determine if the pre-packaged grout selected is suitable for the required application.

When using an approved pre-packaged grout, a grout mix design submittal is not required.

The grout shall be free of soluble chlorides and contain less than one percent soluble sulfate. Supply water in compliance with Article 1024-4 of the Standard Specifications.

Aggregate may be added to the mix only where recommended or permitted by the manufacturer and Engineer. The quantity and gradation of the aggregate shall be in accordance with the manufacturer's recommendations.

Admixtures, if approved by the Department, shall be used in accordance with the manufacturer's recommendations. The manufacture date shall be clearly stamped on each container. Admixtures with an expired shelf life shall not be used.

The Engineer reserves the right to reject material based on unsatisfactory performance.

Initial setting time shall not be less than 10 minutes when tested in accordance with ASTM C266.

Test the expansion and shrinkage of the grout in accordance with ASTM C1090. The grout shall expand no more than 0.2% and shall exhibit no shrinkage. Furnish a Type 4 material certification showing results of tests conducted to determine the properties listed in the Standard Specifications and to assure the material is non-shrink.

Unless required elsewhere in the contract the compressive strength at 3 days shall be at least 5000 psi. Compressive strength in the laboratory shall be determined in accordance with ASTM C109 except the test mix shall contain only water and the dry manufactured material. Compressive strength in the field will be determined by molding and testing 4" x 8" cylinders in accordance with AASHTO T22. Construction loading and traffic loading shall not be allowed until the 3 day compressive strength is achieved.

When tested in accordance with ASTM C666, Procedure A, the durability factor of the grout shall not be less than 80.

3.0 SAMPLING AND PLACEMENT

Place and maintain components in final position until grout placement is complete and accepted. Concrete surfaces to receive grout shall be free of defective concrete, laitance, oil, grease and other foreign matter. Saturate concrete surfaces with clean water and remove excess water prior to placing grout.

DocuSign Envelope ID: 1560E7E9-5A86-4A74-AE3A-80BFF48C90C9

Do not place grout if the grout temperature is less than 50°F or more than 90°F or if the air temperature measured at the location of the grouting operation in the shade away from artificial heat is below 45°F.

Provide grout at a rate that permits proper handling, placing and finishing in accordance with the manufacturer's recommendations unless directed otherwise by the Engineer. Use grout free of any lumps and undispersed cement. Agitate grout continuously before placement.

Control grout delivery so the interval between placing batches in the same component does not exceed 20 minutes.

The Engineer will determine the locations to sample grout and the number and type of samples collected for field and laboratory testing. The compressive strength of the grout will be considered the average compressive strength test results of 3 cube or 2 cylinder specimens at 28 days.

4.0 BASIS OF PAYMENT

No separate payment will be made for "Grout for Structures". The cost of the material, equipment, labor, placement, and any incidentals necessary to complete the work shall be considered incidental to the structure item requiring grout.

MASS CONCRETE (1/23/15)

This special provision applies to substructure components (footings, columns or caps) when the smallest dimension of that component is between five feet and eight feet.

The mass concrete temperature after placement shall not exceed 158°F and the temperature difference between the core and exterior surfaces shall not exceed 35°F. Mass concrete should remain covered and monitored until the difference between the core temperature and the average daily ambient temperature is below 35°F. All mass concrete pours shall remain covered and protected a minimum of 7 days unless otherwise directed by the Engineer.

Submit an analysis, for review and approval, of the anticipated thermal developments in the mass concrete based on the proposed mix design, materials and casting procedures. At a minimum the analysis shall provide: an anticipated range of peak temperatures, temperature gradients, time to peak temperature and recommended cure time. The submittal shall also describe the measures and procedures that will be taken to limit the temperature differential to 35°F or less between the core and exterior surfaces.

Methods for reducing thermal differential may involve but are not limited to a combination of the following:

A. Selecting materials that minimize the heat generated by hydration of the cement.

DocuSign Envelope ID: 1560E7E9-5A86-4A74-AE3A-80BFF48C90C9

B. Cooling materials to reduce the temperature of the concrete in its plastic state.

C. Controlling the rate of concrete placement.

D. Insulating the concrete surface to prevent heat loss.

E. Providing supplemental heat at the concrete surface to prevent heat loss.

F. Other acceptable methods which may be developed by the Contractor.

The temperature of mass concrete at the time of placement shall not be less than 40°F nor more than 75°F.

Mass concrete shall contain an approved set-retarding, water-reducing admixture, and flyash or ground granulated blast furnace slag in the amount of 25% by weight of the total cementitious material (portland cement plus flyash). Flyash or ground granulated blast furnace slag used in the mass concrete mix shall meet the requirements of Articles 1024-5 and 1024-6 of the Standard Specifications. Portland Cement shall meet the requirements of AASHTO M85 for Type II. The total cementitious material shall not exceed 600 lbs. per cubic yard of concrete. The Contractor shall test and submit results for the compressive strength of his proposed mix design for review and approval. The strength must be taken as the average of at least three cylinders made in the laboratory and meet the minimum 28 day strength requirements noted in the contract plans.

The Contractor shall provide and install a minimum of six temperature sensing devices in each mass concrete pour to monitor temperature differentials between the core and exterior surfaces. These devices shall have an accuracy of ±2°F within the temperature range of 40°F to 180°F. One temperature sensing probe shall be placed near the core of the pour, and the remaining temperature sensing probes shall be placed at approximately two inches clear from the surface of the concrete furthest from the core. The Engineer shall approve the locations of the temperature sensing probes.

Readings from the temperature sensing devices shall be recorded at one-hour intervals, from the time casting is complete until the maximum temperature is established. After the maximum temperature is established, record readings from temperature sensing devices at two-hour intervals until consecutive readings indicated the temperature difference between the core and all exterior surfaces is less than 35°F. At the option of the Contractor, the temperature may be recorded by an approved strip-chart recorder furnished by the Contractor.

If monitoring indicates the 35°F differential has been exceeded, the Contractor shall take immediate action to reduce the temperature differential to less than 35°F and revise the thermal plan to ensure future mass concrete pours meet the temperature limits. All revisions to the approved plan must be approved by the Engineer prior to implementation.

At the discretion of the Engineer, all temperature monitoring requirements may be waived provided the Contractor has proven to the satisfaction of the Engineer that the temperature after

DocuSign Envelope ID: 1560E7E9-5A86-4A74-AE3A-80BFF48C90C9

placement will not exceed 158°F and the temperature difference between the core and all exterior surfaces will not exceed 35°F.

Placement of mass concrete shall be continuous resulting in a footing, column or cap that is monolithic and homogeneous.

The entire cost of this work shall be included in the unit contract price bid for the class of concrete associated with the mass concrete.

CONCRETE BARRIER RAIL WITH MOMENT SLAB (1-17-12)

1.0 GENERAL

Construct concrete barrier rail connected to moment slabs to resist traffic impact above retaining walls. Construct concrete barrier rail with moment slab in accordance with the contract and accepted submittals.

2.0 MATERIALS

Refer to Division 10 of the *Standard Specifications*.

Item	Section
Barrier Delineators	1088-2
Portland Cement Concrete	1000
Reinforcing Steel	1070

Use Class AA concrete for concrete barrier rail and Class A concrete for moment slabs. Provide epoxy coated reinforcing steel that meets Article 1070-7 of the *Standard Specifications* for concrete barrier rail.

3.0 CONSTRUCTION METHODS

Construct concrete barrier rail with moment slab in accordance with the plans and accepted submittals. Construct cast-in-place reinforced concrete moment slabs in accordance with Section 420 of the *Standard Specifications* and concrete barrier rail in accordance with Subarticle 460-3(C) of the *Standard Specifications*. Do not remove forms until concrete attains a compressive strength of at least 2,400 psi.

4.0 MEASUREMENT AND PAYMENT

Concrete Barrier Rail with Moment Slab will be measured and paid in linear feet. Concrete barrier rail with moment slab will be measured as the length of concrete barrier rail above retaining walls. The contract unit price for *Concrete Barrier Rail with Moment Slab* will be full compensation for submittals, labor, tools, equipment and concrete barrier rail with moment slab materials, excavating, backfilling, hauling and removing excavated materials and supplying any incidentals necessary to construct concrete barrier rail with moment slab.

DocuSign Envelope ID: 1560E7E9-5A86-4A74-AE3A-80BFF48C90C9

Payment will be made under:

Pay Item	**Pay Unit**
Concrete Barrier Rail with Moment Slab	Linear Foot

County : Cabarrus

Line #	Item Number	Sec #	Description	Quantity	Unit Cost	Amount
			ROADWAY ITEMS			
0001	0000100000-N	800	MOBILIZATION	Lump Sum	L.S.	
0002	0043000000-N	226	GRADING	Lump Sum	L.S.	
0003	0050000000-E	226	SUPPLEMENTARY CLEARING & GRUBBING	1 ACR		
0004	0057000000-E	226	UNDERCUT EXCAVATION	200 CY		
0005	0195000000-E	265	SELECT GRANULAR MATERIAL	200 CY		
0006	0196000000-E	270	GEOTEXTILE FOR SOIL STABILIZATION	1,700 SY		
0007	0318000000-E	300	FOUNDATION CONDITIONING MATERIAL, MINOR STRUCTURES	380 TON		
0008	0320000000-E	300	FOUNDATION CONDITIONING GEOTEXTILE	1,200 SY		
0009	0448200000-E	310	15" RC PIPE CULVERTS, CLASS IV	1,348 LF		
0010	0448300000-E	310	18" RC PIPE CULVERTS, CLASS IV	1,052 LF		
0011	0448400000-E	310	24" RC PIPE CULVERTS, CLASS IV	468 LF		
0012	0448500000-E	310	30" RC PIPE CULVERTS, CLASS IV	140 LF		
0013	0995000000-E	340	PIPE REMOVAL	799 LF		
0015	1099500000-E	505	SHALLOW UNDERCUT	500 CY		
0016	1099700000-E	505	CLASS IV SUBGRADE STABILIZATION	1,000 TON		
0017	1110000000-E	510	STABILIZER AGGREGATE	250 TON		
0018	1220000000-E	545	INCIDENTAL STONE BASE	100 TON		
0019	1297000000-E	607	MILLING ASPHALT PAVEMENT, ***" DEPTH (3")	29,950 SY		
0020	1330000000-E	607	INCIDENTAL MILLING	300 SY		

County : Cabarrus

Line #	Item Number	Sec #	Description	Quantity	Unit Cost	Amount
0021	1489000000-E	610	ASPHALT CONC BASE COURSE, TYPE B25.0B	1,100 TON		
0022	1491000000-E	610	ASPHALT CONC BASE COURSE, TYPE B25.0C	1,870 TON		
0023	1498000000-E	610	ASPHALT CONC INTERMEDIATE COURSE, TYPE I19.0B	620 TON		
0024	1503000000-E	610	ASPHALT CONC INTERMEDIATE COURSE, TYPE I19.0C	1,670 TON		
0025	1519000000-E	610	ASPHALT CONC SURFACE COURSE, TYPE S9.5B	1,560 TON		
0026	1523000000-E	610	ASPHALT CONC SURFACE COURSE, TYPE S9.5C	5,120 TON		
0027	1575000000-E	620	ASPHALT BINDER FOR PLANT MIX	640 TON		
0028	1693000000-E	654	ASPHALT PLANT MIX, PAVEMENT REPAIR	1,854 TON		
0029	2022000000-E	815	SUBDRAIN EXCAVATION	45 CY		
0030	2026000000-E	815	GEOTEXTILE FOR SUBSURFACE DRAINS	200 SY		
0031	2036000000-E	815	SUBDRAIN COARSE AGGREGATE	34 CY		
0032	2044000000-E	815	6" PERFORATED SUBDRAIN PIPE	200 LF		
0033	2070000000-N	815	SUBDRAIN PIPE OUTLET	1 EA		
0034	2077000000-E	815	6" OUTLET PIPE	6 LF		
0035	2286000000-N	840	MASONRY DRAINAGE STRUCTURES	44 EA		
0036	2308000000-E	840	MASONRY DRAINAGE STRUCTURES	23.8 LF		
0037	2364000000-N	840	FRAME WITH TWO GRATES, STD 840.16	2 EA		
0038	2364200000-N	840	FRAME WITH TWO GRATES, STD 840.20	19 EA		

County : Cabarrus

Line #	Item Number	Sec #	Description	Quantity	Unit Cost	Amount
0039	2365000000-N	840	FRAME WITH TWO GRATES, STD 840.22	5 EA		
0040	2366000000-N	840	FRAME WITH TWO GRATES, STD 840.24	1 EA		
0041	2367000000-N	840	FRAME WITH TWO GRATES, STD 840.29	5 EA		
0042	2374000000-N	840	FRAME WITH GRATE & HOOD, STD 840.03, TYPE ** (E)	6 EA		
0043	2374000000-N	840	FRAME WITH GRATE & HOOD, STD 840.03, TYPE ** (F)	5 EA		
0044	2374000000-N	840	FRAME WITH GRATE & HOOD, STD 840.03, TYPE ** (G)	1 EA		
0045	2396000000-N	840	FRAME WITH COVER, STD 840.54	1 EA		
0046	2451000000-N	852	CONCRETE TRANSITIONAL SECTION FOR DROP INLET	13 EA		
0047	2542000000-E	846	1'-6" CONCRETE CURB & GUTTER	2,560 LF		
0048	2549000000-E	846	2'-6" CONCRETE CURB & GUTTER	2,620 LF		
0049	2556000000-E	846	SHOULDER BERM GUTTER	90 LF		
0050	2591000000-E	848	4" CONCRETE SIDEWALK	460 SY		
0051	2600000000-N	SP	RETROFIT EXISTING CURB RAMP	3 EA		
0052	2605000000-N	848	CONCRETE CURB RAMP	8 EA		
0053	2655000000-E	852	5" MONOLITHIC CONCRETE ISLANDS (KEYED IN)	1,800 SY		
0054	2724000000-E	857	PRECAST REINFORCED CONCRETE BARRIER, SINGLE FACED	1,250 LF		
0055	2800000000-N	858	ADJUSTMENT OF CATCH BASINS	3 EA		
0056	2815000000-N	858	ADJUSTMENT OF DROP INLETS	3 EA		

County : Cabarrus

Line #	Item Number	Sec #	Description	Quantity	Unit Cost	Amount
0057	2830000000-N	858	ADJUSTMENT OF MANHOLES	2 EA		
0058	2845000000-N	858	ADJUSTMENT OF METER BOXES OR VALVE BOXES	20 EA		
0059	2995000000-N	SP	GENERIC DRAINAGE ITEM CONVERT EXISTING CATCH BASIN TO TRAFFIC BEARING JUNCTION BOX WITH MANHOLE	1 EA		
0060	3000000000-N	SP	IMPACT ATTENUATOR UNIT, TYPE 350	2 EA		
0061	3030000000-E	862	STEEL BM GUARDRAIL	225 LF		
0062	3150000000-N	862	ADDITIONAL GUARDRAIL POSTS	5 EA		
0063	3210000000-N	862	GUARDRAIL ANCHOR UNITS, TYPE CAT-1	2 EA		
0064	3287000000-N	SP	GUARDRAIL END UNITS, TYPE TL-3	3 EA		
0065	3317000000-N	862	GUARDRAIL ANCHOR UNITS, TYPE B-77	1 EA		
0066	3345000000-E	864	REMOVE & RESET EXISTING GUARD-RAIL	87.5 LF		
0067	3360000000-E	863	REMOVE EXISTING GUARDRAIL	298 LF		
0068	3575000000-E	SP	GENERIC FENCING ITEM TEMPORARY 48" CHAIN LINK FENCE WITH POSTS	330 LF		
0069	3649000000-E	876	RIP RAP, CLASS B	1 TON		
0070	3656000000-E	876	GEOTEXTILE FOR DRAINAGE	575 SY		
0071	4054000000-E	902	PLAIN CONCRETE SIGN FOUNDA-TIONS	1 CY		
0072	4057000000-E	SP	OVERHEAD FOOTING	71 CY		
0073	4060000000-E	903	SUPPORTS, BREAKAWAY STEEL BEAM	216 LB		
0074	4072000000-E	903	SUPPORTS, 3-LB STEEL U-CHANNEL	300 LF		

County : Cabarrus

Line #	Item Number	Sec #	Description	Quantity	Unit Cost	Amount
0075	4082100000-N	SP	SUPPORTS, OVERHEAD SIGN STRUCTURE AT STA ****** (34+94 -L-)	Lump Sum	L.S.	
0076	4102000000-N	904	SIGN ERECTION, TYPE E	24 EA		
0077	4109000000-N	904	SIGN ERECTION, TYPE *** (OVERHEAD) (A)	11 EA		
0078	4110000000-N	904	SIGN ERECTION, TYPE *** (GROUND MOUNTED) (A)	1 EA		
0079	4116100000-N	904	SIGN ERECTION, RELOCATE, TYPE **** (GROUND MOUNTED) (E)	3 EA		
0080	4155000000-N	907	DISPOSAL OF SIGN SYSTEM, U-CHANNEL	23 EA		
0081	4192000000-N	907	DISPOSAL OF SUPPORT, U-CHANNEL	3 EA		
0082	4370000000-N	SP	GENERIC SIGNING ITEM SUPPORTS, OVERHEAD SIGN STR AT I-85 SB EXIT RAMP	Lump Sum	L.S.	
0083	4370000000-N	SP	GENERIC SIGNING ITEM SUPPORTS, OVERHEAD SIGN STR AT WB BRUTON SMITH E OF I-85 NB RAMP	Lump Sum	L.S.	
0084	4370000000-N	SP	GENERIC SIGNING ITEM SUPPORTS, OVERHEAD SIGN STR AT WB CONCORD MILLS AT I-85 SB LOOP	Lump Sum	L.S.	
0085	4400000000-E	1110	WORK ZONE SIGNS (STATIONARY)	451 SF		
0086	4405000000-E	1110	WORK ZONE SIGNS (PORTABLE)	372 SF		
0087	4410000000-E	1110	WORK ZONE SIGNS (BARRICADE MOUNTED)	107 SF		
0088	4415000000-N	1115	FLASHING ARROW BOARD	3 EA		
0089	4420000000-N	1120	PORTABLE CHANGEABLE MESSAGE SIGN	2 EA		

County : Cabarrus

Line #	Item Number	Sec #	Description	Quantity	Unit Cost	Amount
0090	4422000000-N	1120	PORTABLE CHANGEABLE MESSAGE SIGN (SHORT TERM)	30 DAY		
0091	4430000000-N	1130	DRUMS	180 EA		
0092	4435000000-N	1135	CONES	50 EA		
0093	4445000000-E	1145	BARRICADES (TYPE III)	200 LF		
0094	4450000000-N	1150	FLAGGER	192 HR		
0095	4465000000-N	1160	TEMPORARY CRASH CUSHIONS	3 EA		
0096	4480000000-N	1165	TMA	3 EA		
0097	4485000000-E	1170	PORTABLE CONCRETE BARRIER	1,255 LF		
0098	4510000000-N	SP	LAW ENFORCEMENT	296 HR		
0099	4650000000-N	1251	TEMPORARY RAISED PAVEMENT MARKERS	205 EA		
0100	4685000000-E	1205	THERMOPLASTIC PAVEMENT MARKING LINES (4", 90 MILS)	10,008 LF		
0101	4686000000-E	1205	THERMOPLASTIC PAVEMENT MARKING LINES (4", 120 MILS)	4,915 LF		
0102	4695000000-E	1205	THERMOPLASTIC PAVEMENT MARKING LINES (8", 90 MILS)	1,922 LF		
0103	4697000000-E	1205	THERMOPLASTIC PAVEMENT MARKING LINES (8", 120 MILS)	806 LF		
0104	4700000000-E	1205	THERMOPLASTIC PAVEMENT MARKING LINES (12", 90 MILS)	324 LF		
0105	4710000000-E	1205	THERMOPLASTIC PAVEMENT MARKING LINES (24", 120 MILS)	436 LF		
0106	4721000000-E	1205	THERMOPLASTIC PAVEMENT MARKING CHARACTER (120 MILS)	74 EA		
0107	4725000000-E	1205	THERMOPLASTIC PAVEMENT MARKING SYMBOL (90 MILS)	75 EA		

County : Cabarrus

Line #	Item Number	Sec #	Description	Quantity	Unit Cost	Amount
0108	4770000000-E	1205	COLD APPLIED PLASTIC PAVEMENT MARKING LINES, TYPE ** (4") (II)	603 LF		
0109	4770000000-E	1205	COLD APPLIED PLASTIC PAVEMENT MARKING LINES, TYPE ** (4") (IV)	473 LF		
0110	4810000000-E	1205	PAINT PAVEMENT MARKING LINES (4")	21,900 LF		
0111	4820000000-E	1205	PAINT PAVEMENT MARKING LINES (8")	810 LF		
0112	4825000000-E	1205	PAINT PAVEMENT MARKING LINES (12")	142 LF		
0113	4835000000-E	1205	PAINT PAVEMENT MARKING LINES (24")	244 LF		
0114	4840000000-N	1205	PAINT PAVEMENT MARKING CHARAC-TER	24 EA		
0115	4845000000-N	1205	PAINT PAVEMENT MARKING SYMBOL	68 EA		
0116	4850000000-E	1205	REMOVAL OF PAVEMENT MARKING LINES (4")	4,069 LF		
0117	4860000000-E	1205	REMOVAL OF PAVEMENT MARKING LINES (8")	36 LF		
0118	4870000000-E	1205	REMOVAL OF PAVEMENT MARKING LINES (24")	48 LF		
0119	4875000000-N	1205	REMOVAL OF PAVEMENT MARKING SYMBOLS & CHARACTERS	27 EA		
0120	4900000000-N	1251	PERMANENT RAISED PAVEMENT MARKERS	24 EA		
0121	4905000000-N	1253	SNOWPLOWABLE PAVEMENT MARKERS	199 EA		
0122	5255000000-N	1413	PORTABLE LIGHTING	Lump Sum	L.S.	
0123	5326200000-E	1510	12" WATER LINE	107 LF		
0124	5326600000-E	1510	16" WATER LINE	424 LF		

County : Cabarrus

Line #	Item Number	Sec #	Description	Quantity	Unit Cost	Amount
0125	5329000000-E	SP	DUCTILE IRON WATER PIPE FITTINGS	1,185 LB		
0126	5572200000-E	1515	12" TAPPING VALVE	1 EA		
0127	5643200000-E	1515	2" WATER METER	1 EA		
0128	5656200000-E	1515	2" RPZ BACKFLOW PREVENTION ASSEMBLY	1 EA		
0129	5691000000-E	1520	**" SANITARY GRAVITY SEWER (15")	40 LF		
0130	5776000000-E	1525	5' DIA UTILITY MANHOLE	1 EA		
0131	5782000000-E	1525	UTILITY MANHOLE WALL, 5' DIA	8 LF		
0132	5798000000-E	1530	ABANDON **" UTILITY PIPE (15")	40 LF		
0133	5804000000-E	1530	ABANDON 12" UTILITY PIPE	610 LF		
0134	5828000000-N	1530	REMOVE UTILITY MANHOLE	1 EA		
0135	5871900000-E	1550	TRENCHLESS INSTALLATION OF 16" IN SOIL	212 LF		
0136	5871910000-E	1550	TRENCHLESS INSTALLATION OF 16" NOT IN SOIL	212 LF		
0137	6000000000-E	1605	TEMPORARY SILT FENCE	1,600 LF		
0138	6006000000-E	1610	STONE FOR EROSION CONTROL, CLASS A	310 TON		
0139	6009000000-E	1610	STONE FOR EROSION CONTROL, CLASS B	135 TON		
0140	6012000000-E	1610	SEDIMENT CONTROL STONE	490 TON		
0141	6015000000-E	1615	TEMPORARY MULCHING	4 ACR		
0142	6018000000-E	1620	SEED FOR TEMPORARY SEEDING	300 LB		

County : Cabarrus

Line #	Item Number	Sec #	Description	Quantity	Unit Cost	Amount
0143	6021000000-E	1620	FERTILIZER FOR TEMPORARY SEEDING	1.5 TON		
0144	6024000000-E	1622	TEMPORARY SLOPE DRAINS	200 LF		
0145	6029000000-E	SP	SAFETY FENCE	200 LF		
0146	6030000000-E	1630	SILT EXCAVATION	280 CY		
0147	6036000000-E	1631	MATTING FOR EROSION CONTROL	3,000 SY		
0148	6037000000-E	SP	COIR FIBER MAT	100 SY		
0149	6042000000-E	1632	1/4" HARDWARE CLOTH	1,600 LF		
0150	6071012000-E	SP	COIR FIBER WATTLE	170 LF		
0151	6071020000-E	SP	POLYACRYLAMIDE (PAM)	50 LB		
0152	6084000000-E	1660	SEEDING & MULCHING	3 ACR		
0153	6087000000-E	1660	MOWING	1.5 ACR		
0154	6090000000-E	1661	SEED FOR REPAIR SEEDING	50 LB		
0155	6093000000-E	1661	FERTILIZER FOR REPAIR SEEDING	0.25 TON		
0156	6096000000-E	1662	SEED FOR SUPPLEMENTAL SEEDING	100 LB		
0157	6108000000-E	1665	FERTILIZER TOPDRESSING	3 TON		
0158	6114500000-N	1667	SPECIALIZED HAND MOWING	15 MHR		
0159	6117000000-N	SP	RESPONSE FOR EROSION CONTROL	15 EA		
0160	6132000000-N	SP	GENERIC EROSION CONTROL ITEM CONCRETE WASHOUT STRUCTURE	3 EA		
0161	7048500000-E	1705	PEDESTRIAN SIGNAL HEAD (16", 1 SECTION W/COUNTDOWN)	6 EA		
0162	7060000000-E	1705	SIGNAL CABLE	7,950 LF		

County : Cabarrus

Line #	Item Number	Sec #	Description	Quantity	Unit Cost	Amount
0163	7120000000-E	1705	VEHICLE SIGNAL HEAD (12", 3 SECTION)	40 EA		
0164	7132000000-E	1705	VEHICLE SIGNAL HEAD (12", 4 SECTION)	3 EA		
0165	7144000000-E	1705	VEHICLE SIGNAL HEAD (12", 5 SECTION)	3 EA		
0166	7264000000-E	1710	MESSENGER CABLE (3/8")	1,030 LF		
0167	7279000000-E	1715	TRACER WIRE	2,600 LF		
0168	7300000000-E	1715	UNPAVED TRENCHING (**********) (1, 2")	1,275 LF		
0169	7300000000-E	1715	UNPAVED TRENCHING (**********) (2, 2")	105 LF		
0170	7300000000-E	1715	UNPAVED TRENCHING (**********) (3, 2")	50 LF		
0171	7300000000-E	1715	UNPAVED TRENCHING (**********) (4, 2")	125 LF		
0172	7301000000-E	1715	DIRECTIONAL DRILL (**********) (1, 2")	2,600 LF		
0173	7301000000-E	1715	DIRECTIONAL DRILL (**********) (2, 2")	160 LF		
0174	7301000000-E	1715	DIRECTIONAL DRILL (**********) (3, 2")	150 LF		
0175	7301000000-E	1715	DIRECTIONAL DRILL (**********) (4, 2")	150 LF		
0176	7324000000-N	1716	JUNCTION BOX (STANDARD SIZE)	13 EA		
0177	7348000000-N	1716	JUNCTION BOX (OVER-SIZED, HEA-VY DUTY)	15 EA		
0178	7360000000-N	1720	WOOD POLE	3 EA		
0179	7372000000-N	1721	GUY ASSEMBLY	12 EA		
0180	7420000000-E	1722	2" RISER WITH WEATHERHEAD	5 EA		

County : Cabarrus

Line #	Item Number	Sec #	Description	Quantity	Unit Cost	Amount
0181	7444000000-E	1725	INDUCTIVE LOOP SAWCUT	8,550 LF		
0182	7456000000-E	1726	LEAD-IN CABLE (**********) (14-2)	15,000 LF		
0183	7481000000-N	SP	SITE SURVEY	2 EA		
0184	7481240000-N	SP	CAMERA WITHOUT INTERNAL LOOP EMULATOR PROCESSING UNIT	5 EA		
0185	7481260000-N	SP	EXTERNAL LOOP EMULATOR PROCESSING UNIT	2 EA		
0186	7516000000-E	1730	COMMUNICATIONS CABLE (**FIBER) (12)	400 LF		
0187	7516000000-E	1730	COMMUNICATIONS CABLE (**FIBER) (24)	3,100 LF		
0188	7540000000-N	1731	SPLICE ENCLOSURE	3 EA		
0189	7541000000-N	1731	MODIFY SPLICE ENCLOSURE	2 EA		
0190	7552000000-N	1731	INTERCONNECT CENTER	1 EA		
0191	7566000000-N	1733	DELINEATOR MARKER	11 EA		
0192	7575160000-E	1734	REMOVE EXISTING COMMUNICATIONS CABLE	300 LF		
0193	7588000000-N	SP	METAL POLE WITH SINGLE MAST ARM	1 EA		
0194	7613000000-N	SP	SOIL TEST	1 EA		
0195	7614100000-E	SP	DRILLED PIER FOUNDATION	10 CY		
0196	7631000000-N	SP	MAST ARM WITH METAL POLE DESIGN	1 EA		
0197	7636000000-N	1745	SIGN FOR SIGNALS	8 EA		
0198	7642200000-N	1743	TYPE II PEDESTAL WITH FOUNDATION	10 EA		

County : Cabarrus

Line #	Item Number	Sec #	Description	Quantity	Unit Cost	Amount
0199	7684000000-N	1750	SIGNAL CABINET FOUNDATION	1 EA		
0200	7686000000-N	1752	CONDUIT ENTRANCE INTO EXISTING FOUNDATION	3 EA		
0201	7756000000-N	1751	CONTROLLER WITH CABINET (TYPE 2070L, BASE MOUNTED)	1 EA		
0202	7780000000-N	1751	DETECTOR CARD (TYPE 2070L)	11 EA		
0203	7901000000-N	1753	CABINET BASE EXTENDER	1 EA		
0204	7980000000-N	SP	GENERIC SIGNAL ITEM FURNISH & INSTALL NEW 2070E CONTROLLER IN EXISTING CABINET	2 EA		
0205	7990000000-E	SP	GENERIC SIGNAL ITEM BACK PULL FIBER OPTIC CABLE	325 LF		

WALL ITEMS

0206	8801000000-E	SP	MSE RETAINING WALL NO **** (1)	4,055 SF		
0207	8801000000-E	SP	MSE RETAINING WALL NO **** (2)	5,195 SF		
0208	8801000000-E	SP	MSE RETAINING WALL NO **** (3)	8,220 SF		
0209	8801000000-E	SP	MSE RETAINING WALL NO **** (4)	4,425 SF		

STRUCTURE ITEMS

0210	8084000000-N	410	FOUNDATION EXCAVATION FOR END BENT ** AT STATION ********** (1, 15+75.56 -Y1-)	Lump Sum	L.S.	

County : Cabarrus

Line #	Item Number	Sec #	Description	Quantity	Unit Cost	Amount
0211	8084000000-N	410	FOUNDATION EXCAVATION FOR END BENT ** AT STATION ********** (2, 15+75.56 -Y1-)	Lump Sum	L.S.	
0212	8154000000-E	420	REINFORCED CONCRETE DECK SLAB (SAND LIGHTWEIGHT CONC)	11,151 SF		
0213	8161000000-E	420	GROOVING BRIDGE FLOORS	12,228 SF		
0214	8182000000-E	420	CLASS A CONCRETE (BRIDGE)	1,083.8 CY		
0215	8210000000-N	422	BRIDGE APPROACH SLABS, STATION ********** (15+75.56 -Y1-)	Lump Sum	L.S.	
0216	8217000000-E	425	REINFORCING STEEL (BRIDGE)	144,474 LB		
0217	8280000000-E	440	APPROX ..... LBS STRUCTURAL STEEL	1,073,598 LS		
0218	8503000000-E	460	CONCRETE BARRIER RAIL	405 LF		
0219	8654000000-N	SP	DISC BEARINGS	Lump Sum	L.S.	
0220	8706000000-N	SP	EXPANSION JOINT SEALS	Lump Sum	L.S.	
0221	8727000000-N	SP	ELECTRICAL CONDUIT SYSTEM FOR SIGNALS AT STA********** (15+75.56 -Y1-)	Lump Sum	L.S.	
0222	8867000000-E	SP	GENERIC STRUCTURE ITEM CONCRETE BARRIER RAIL WITH MOMENT SLAB	1,588.2 LF		

MBE GOAL SET: 3.00%
MBE GOAL OBT: 3.69%
WBE GOAL SET: 3.00%
WBE GOAL OBT: 3.96%

Vendor 1 of 5: BLYTHE DEVELOPMENT CO. (3740)
Call Order 006 (Proposal: C203994)

Bid Information

Proposal County: CABARRUS
Vendor Address: 1415 E. Westinghouse Blvd.
Signature Check: L.JACK_BLYTHE_3740
Time Bid Received: December 19, 2017 01:52 PM
Amendment Count: 1

Bid Checksum: B3A8D2D8
Bid Total: $10,216,654.70
Items Total: $10,216,654.70
Time Total: $0.00

Bidding Errors:
None.

Vendor 1 of 5: BLYTHE DEVELOPMENT CO. (3740)
Call Order 006 (Proposal: C203994)

Bid Bond Information

Projects:		**Bond Maximum:**	
Counties:		**State of Incorporation:**	
Bond ID:	SNC17279005	**Agency Execution Date:**	12/11/2017 1
Paid by Check:	No	**Surety Name:**	surety2000
Bond Percent:	5%	**Bond Agency Name:**	Liberty Mutual Insurance Company

Bidder 1 of 5

Vendor 3740's Bid Information for Call 006, Letting L171219, 12/19/17

Blythe Development Co (3740)
Call Order 006 (Proposal ID C203994)

LIST OF MBE PARTICIPANTS

VENDOR NUMBER	DBE NAME / ADDRESS	WORK CODE	TYPE OF WORK	CERT TYPE	AMOUNT	
7138	EXPRESS LOGISTICS SERVICES INC P.O. BOX 19761 , CHARLOTTE, NC 28219			Sub	216,214.81	COMMITTED
11572	CRUZ BROTHERS CONCRETE, INC. 1572 PAYNE ROAD/LOT 75 LOT 75 , GRAHAM, NC 27253			Sub	160,885.00	COMMITTED
				TOTAL:	$377,099.81 3.69%	

Vendor 3740's Bid Information for Call 006, Letting L171219, 12/19/17

Blythe Development Co (3740)
Call Order 006 (Proposal ID C203994)

LIST OF WBE PARTICIPANTS

VENDOR NUMBER	DBE NAME / ADDRESS	WORK CODE	TYPE OF WORK	CERT TYPE	AMOUNT	
2759	SUPERIOR SEEDING INC POST OFFICE BOX 12642 , GASTONIA, NC 280520010			Sub	28,750.00	COMMITTED
3376	REYNOLDS FENCE & GUARDRAIL INC 9320 MACHADO DRIVE , INDIAN TRAIL, NC 28079			Sub	45,468.50	COMMITTED
3080	CURTIN TRUCKING & DRAINAGE INC POST OFFICE BOX 38220 , CHARLOTTE, NC 282781003			Sub	54,556.25	COMMITTED
5796	A1 PAVEMENT MARKING LLC 238 N BIVENS RD , MONROE, NC 28110			Sub	96,272.16	COMMITTED
3765	STAY ALERT SAFETY SERVICES INC POST OFFICE BOX 467 , KERNERSVILLE, NC 27285			Sub	38,730.00	COMMITTED
4761	TRAFFIC CONTROL SAFETY SERVICES POST OFFICE BOX 24511 , WINSTON-SALEM, NC 27114			Sub	141,157.50	COMMITTED
				TOTAL:	$404,934.41 3.96%	

Vendor 3740's Bid Information for Call 006, Letting L171219, 12/19/17

Blythe Development Co (3740)
Call Order 006 (Proposal ID C203994)

Miscelleneous Data Info - Contractor Responses:
==========

NON-COLLUSION AND DEBARMENT CERTIFICATION

Explanation of the prospective bidder that is unable to certify to any of the statements in this certification:

Explanation:
NOT ANSWERED
NOT ANSWERED
NOT ANSWERED
NOT ANSWERED

Bidder 1 of 5

AWARD LIMITS ON MULTIPLE PROJECTS

By answering YES to this statement, the bidder acknowleges that they are using the award limits on multiple projects. No

It is the desire of the Bidder to be awarded contracts, the value of which will not exceed a total of NOT ANSWERED for those projects indicated herein, for which bids will be opened on (MM/DD/YY)

The Award Limits shall apply to the following projects:

Contract Number	County
NOT ANSWERED	
NOT ANSWERED	
NOT ANSWERED	
NOT ANSWERED	
NOT ANSWERED	
NOT ANSWERED	

Bid Bond Data Info - Contractor Responses:

BondID: SNC17279005
Surety Registry Agency: surety2000
Verified?: Yes
Surety Agency: Liberty Mutual Insurance Company
Bond Execution Date: 12/11/2017 1
Bond Amount: $510,832.73 (Five Percent of Bid)

Contract ID: C203994 Project(s): STATE FUNDED
Letting Date: 12-19-17 Call Order: 006
Bidder: 3740 - Blythe Development Co

Line No.	Item Description	Approx. Quantity and Units	Unit Price Dollars	Unit Price Cts	Bid Amount Dollars	Bid Amount Ct
Section 0001	ROADWAY ITEMS					
	Alt Group					
0001	0000100000-N MOBILIZATION	LUMP	LUMP		510,000.00	
0002	0043000000-N GRADING	LUMP	LUMP		953,700.00	
0003	0050000000-E SUPPLEMENTARY CLEARING & GRUB-BING	1.000 ACR	8,000.00000		8,000.00	
0004	0057000000-E UNDERCUT EXCAVATION	200.000 CY	35.00000		7,000.00	
0005	0195000000-E SELECT GRANULAR MATERIAL	200.000 CY	46.00000		9,200.00	
0006	0196000000-E GEOTEXTILE FOR SOIL STABILIZA-TION	1,700.000 SY	2.50000		4,250.00	
0007	0318000000-E FOUNDATION CONDITIONING MATE- RIAL, MINOR STRUCTURES	380.000 TON	35.00000		13,300.00	
0008	0320000000-E FOUNDATION CONDITIONING GEO-TEXTILE	1,200.000 SY	2.50000		3,000.00	
0009	0448200000-E 15" RC PIPE CULVERTS, CLASS IV	1,348.000 LF	70.00000		94,360.00	
0010	0448300000-E 18" RC PIPE CULVERTS, CLASS IV	1,052.000 LF	80.00000		84,160.00	
0011	0448400000-E 24" RC PIPE CULVERTS, CLASS IV	468.000 LF	100.00000		46,800.00	

Contract ID: C203994 Project(s): STATE FUNDED
Letting Date: 12-19-17 Call Order: 006
Bidder: 3740 - Blythe Development Co

Line No.	Item Description	Approx. Quantity and Units	Unit Price Dollars	Unit Price Cts	Bid Amount Dollars	Bid Amount Ct
0012	0448500000-E 30" RC PIPE CULVERTS, CLASS IV	140.000 LF	117.00000		16,380.00	
0013	0995000000-E PIPE REMOVAL	799.000 LF	21.30000		17,018.70	
0015	1099500000-E SHALLOW UNDERCUT	500.000 CY	17.00000		8,500.00	
0016	1099700000-E CLASS IV SUBGRADE STABILIZA- TION	1,000.000 TON	26.50000		26,500.00	
0017	1110000000-E STABILIZER AGGREGATE	250.000 TON	26.80000		6,700.00	
0018	1220000000-E INCIDENTAL STONE BASE	100.000 TON	27.25000		2,725.00	
0019	1297000000-E MILLING ASPHALT PAVEMENT, ***"DEPTH (3")	29,950.000 SY	2.75000		82,362.50	
0020	1330000000-E INCIDENTAL MILLING	300.000 SY	10.00000		3,000.00	
0021	1489000000-E ASPHALT CONC BASE COURSE, TYPE B25.0B	1,100.000 TON	65.50000		72,050.00	
0022	1491000000-E ASPHALT CONC BASE COURSE, TYPE B25.0C	1,870.000 TON	65.50000		122,485.00	
0023	1498000000-E ASPHALT CONC INTERMEDIATE COURSE, TYPE I19.0B	620.000 TON	65.50000		40,610.00	
0024	1503000000-E ASPHALT CONC INTERMEDIATE COURSE, TYPE I19.0C	1,670.000 TON	65.50000		109,385.00	

Contract ID: C203994 Project(s): STATE FUNDED
Letting Date: 12-19-17 Call Order: 006
Bidder: 3740 - Blythe Development Co

Line No.	Item Description	Approx. Quantity and Units	Unit Price Dollars	Unit Price Cts	Bid Amount Dollars	Bid Amount Ct
0025	1519000000-E ASPHALT CONC SURFACE COURSE, TYPE S9.5B	1,560.000 TON	60.00000		93,600.00	
0026	1523000000-E ASPHALT CONC SURFACE COURSE, TYPE S9.5C	5,120.000 TON	60.00000		307,200.00	
0027	1575000000-E ASPHALT BINDER FOR PLANT MIX	640.000 TON	425.00000		272,000.00	
0028	1693000000-E ASPHALT PLANT MIX, PAVEMENT REPAIR	1,854.000 TON	125.00000		231,750.00	
0029	2022000000-E SUBDRAIN EXCAVATION	45.000 CY	35.00000		1,575.00	
0030	2026000000-E GEOTEXTILE FOR SUBSURFACE DRAINS	200.000 SY	10.25000		2,050.00	
0031	2036000000-E SUBDRAIN COARSE AGGREGATE	34.000 CY	74.00000		2,516.00	
0032	2044000000-E 6" PERFORATED SUBDRAIN PIPE	200.000 LF	17.00000		3,400.00	
0033	2070000000-N SUBDRAIN PIPE OUTLET	1.000 EA	400.00000		400.00	
0034	2077000000-E 6" OUTLET PIPE	6.000 LF	40.00000		240.00	
0035	2286000000-N MASONRY DRAINAGE STRUCTURES	44.000 EA	1,800.00000		79,200.00	
0036	2308000000-E MASONRY DRAINAGE STRUCTURES	23.800 LF	200.00000		4,760.00	

Contract ID: C203994 Project(s): STATE FUNDED
Letting Date: 12-19-17 Call Order: 006
Bidder: 3740 - Blythe Development Co

Line No.	Item Description	Approx. Quantity and Units	Unit Price Dollars	Unit Price Cts	Bid Amount Dollars	Bid Amount Ct
0037	2364000000-N FRAME WITH TWO GRATES, STD 840.16	2.000 EA	710.00000		1,420.00	
0038	2364200000-N FRAME WITH TWO GRATES, STD 840.20	19.000 EA	655.00000		12,445.00	
0039	2365000000-N FRAME WITH TWO GRATES, STD 840.22	5.000 EA	650.00000		3,250.00	
0040	2366000000-N FRAME WITH TWO GRATES, STD 840.24	1.000 EA	640.00000		640.00	
0041	2367000000-N FRAME WITH TWO GRATES, STD 840.29	5.000 EA	650.00000		3,250.00	
0042	2374000000-N FRAME WITH GRATE & HOOD, STD 840.03, TYPE ** (E)	6.000 EA	750.00000		4,500.00	
0043	2374000000-N FRAME WITH GRATE & HOOD, STD 840.03, TYPE ** (F)	5.000 EA	775.00000		3,875.00	
0044	2374000000-N FRAME WITH GRATE & HOOD, STD 840.03, TYPE ** (G)	1.000 EA	775.00000		775.00	
0045	2396000000-N FRAME WITH COVER, STD 840.54	1.000 EA	470.00000		470.00	
0046	2451000000-N CONCRETE TRANSITIONAL SECTION FOR DROP INLET	13.000 EA	965.00000		12,545.00	
0047	2542000000-E 1'-6" CONCRETE CURB & GUTTER	2,560.000 LF	20.00000		51,200.00	
0048	2549000000-E 2'-6" CONCRETE CURB & GUTTER	2,620.000 LF	24.00000		62,880.00	

Contract ID: C203994 Project(s): STATE FUNDED
Letting Date: 12-19-17 Call Order: 006
Bidder: 3740 - Blythe Development Co

Line No.	Item Description	Approx. Quantity and Units	Unit Price Dollars	Unit Price Cts	Bid Amount Dollars	Bid Amount Ct
0049	2556000000-E SHOULDER BERM GUTTER	90.000 LF	28.40000		2,556.00	
0050	2591000000-E 4" CONCRETE SIDEWALK	460.000 SY	54.25000		24,955.00	
0051	2600000000-N RETROFIT EXISTING CURB RAMP	3.000 EA	2,680.00000		8,040.00	
0052	2605000000-N CONCRETE CURB RAMP	8.000 EA	2,385.00000		19,080.00	
0053	2655000000-E 5" MONOLITHIC CONCRETE ISLANDS(KEYED IN)	1,800.000 SY	83.10000		149,580.00	
0054	2724000000-E PRECAST REINFORCED CONCRETE BARRIER, SINGLE FACED	1,250.000 LF	95.00000		118,750.00	
0055	2800000000-N ADJUSTMENT OF CATCH BASINS	3.000 EA	683.00000		2,049.00	
0056	2815000000-N ADJUSTMENT OF DROP INLETS	3.000 EA	685.00000		2,055.00	
0057	2830000000-N ADJUSTMENT OF MANHOLES	2.000 EA	500.00000		1,000.00	
0058	2845000000-N ADJUSTMENT OF METER BOXES OR VALVE BOXES	20.000 EA	615.00000		12,300.00	
0059	2995000000-N GENERIC DRAINAGE ITEM CONVERT EXISTING CATCH BASIN TO TRAFFIC BEARING JUNCTION BOX WITH MANHOLE	1.000 EA	655.00000		655.00	

Contract ID: C203994 Project(s): STATE FUNDED
Letting Date: 12-19-17 Call Order: 006
Bidder: 3740 - Blythe Development Co

Line No.	Item Description	Approx. Quantity and Units	Unit Price Dollars	Unit Price Cts	Bid Amount Dollars	Bid Amount Ct
0060	3000000000-N IMPACT ATTENUATOR UNIT, TYPE 350	2.000 EA	19,160.00000		38,320.00	
0061	3030000000-E STEEL BM GUARDRAIL	225.000 LF	18.00000		4,050.00	
0062	3150000000-N ADDITIONAL GUARDRAIL POSTS	5.000 EA	40.00000		200.00	
0063	3210000000-N GUARDRAIL ANCHOR UNITS, TYPE CAT-1	2.000 EA	855.00000		1,710.00	
0064	3287000000-N GUARDRAIL END UNITS, TYPE TL-3	3.000 EA	3,295.00000		9,885.00	
0065	3317000000-N GUARDRAIL ANCHOR UNITS, TYPE B-77	1.000 EA	1,760.00000		1,760.00	
0066	3345000000-E REMOVE & RESET EXISTING GUARD-RAIL	87.500 LF	6.00000		525.00	
0067	3360000000-E REMOVE EXISTING GUARDRAIL	298.000 LF	2.30000		685.40	
0068	3575000000-E GENERIC FENCING ITEM TEMPORARY 48" CHAIN LINK FENCE WITH POSTS	330.000 LF	13.00000		4,290.00	
0069	3649000000-E RIP RAP, CLASS B	1.000 TON	255.00000		255.00	
0070	3656000000-E GEOTEXTILE FOR DRAINAGE	575.000 SY	2.15000		1,236.25	

Contract ID: C203994 Project(s): STATE FUNDED
Letting Date: 12-19-17 Call Order: 006
Bidder: 3740 - Blythe Development Co

Line No.	Item Description	Approx. Quantity and Units	Unit Price Dollars	Unit Price Cts	Bid Amount Dollars	Bid Amount Ct
0071	4054000000-E PLAIN CONCRETE SIGN FOUNDATIONS	1.000 CY	6.00000		6.00	
0072	4057000000-E OVERHEAD FOOTING	71.000 CY	1,535.00000		108,985.00	
0073	4060000000-E SUPPORTS, BREAKAWAY STEEL BEAM	216.000 LB	9.00000		1,944.00	
0074	4072000000-E SUPPORTS, 3-LB STEEL U-CHANNEL	300.000 LF	9.00000		2,700.00	
0075	4082100000-N SUPPORTS, OVERHEAD SIGN STRUC-TURE AT STA ****** (34+94 -L-)	LUMP	LUMP		65,000.00	
0076	4102000000-N SIGN ERECTION, TYPE E	24.000 EA	115.00000		2,760.00	
0077	4109000000-N SIGN ERECTION, TYPE *** (OVER-HEAD) (A)	11.000 EA	1,080.00000		11,880.00	
0078	4110000000-N SIGN ERECTION, TYPE *** (GROUND MOUNTED) (A)	1.000 EA	1,080.00000		1,080.00	
0079	4116100000-N SIGN ERECTION, RELOCATE, TYPE **** (GROUND MOUNTED) (E)	3.000 EA	115.00000		345.00	
0080	4155000000-N DISPOSAL OF SIGN SYSTEM, U- CHANNEL	23.000 EA	2.50000		57.50	
0081	4192000000-N DISPOSAL OF SUPPORT, U-CHANNEL	3.000 EA	2.50000		7.50	

Contract ID: C203994 Project(s): STATE FUNDED
Letting Date: 12-19-17 Call Order: 006
Bidder: 3740 - Blythe Development Co

Line No.	Item Description	Approx. Quantity and Units	Unit Price Dollars	Unit Price Cts	Bid Amount Dollars	Bid Amount Ct
0082	4370000000-N GENERIC SIGNING ITEM SUPPORTS, OVERHEAD SIGN STR AT I-85 SB EXIT RAMP	LUMP	LUMP		52,000.00	
0083	4370000000-N GENERIC SIGNING ITEM SUPPORTS, OVERHEAD SIGN STR AT WB BRUTON SMITH E OF I-85 NB RAMP	LUMP	LUMP		54,000.00	
0084	4370000000-N GENERIC SIGNING ITEM SUPPORTS, OVERHEAD SIGN STR AT WB CONCORD MILLS AT I-85 SB LOOP	LUMP	LUMP		32,400.00	
0085	4400000000-E WORK ZONE SIGNS (STATIONARY)	451.000 SF	15.00000		6,765.00	
0086	4405000000-E WORK ZONE SIGNS (PORTABLE)	372.000 SF	10.50000		3,906.00	
0087	4410000000-E WORK ZONE SIGNS (BARRICADE MOUNTED)	107.000 SF	10.25000		1,096.75	
0088	4415000000-N FLASHING ARROW BOARD	3.000 EA	2,725.00000		8,175.00	
0089	4420000000-N PORTABLE CHANGEABLE MESSAGE SIGN	2.000 EA	12,320.00000		24,640.00	
0090	4422000000-N PORTABLE CHANGEABLE MESSAGE SIGN (SHORT TERM)	30.000 DAY	62.00000		1,860.00	
0091	4430000000-N DRUMS	180.000 EA	50.00000		9,000.00	

Line No.	Item Description	Approx. Quantity and Units	Unit Price Dollars	Unit Price Cts	Bid Amount Dollars	Bid Amount Ct
0092	4435000000-N CONES	50.000 EA	20.00000		1,000.00	
0093	4445000000-E BARRICADES (TYPE III)	200.000 LF	30.00000		6,000.00	
0094	4450000000-N FLAGGER	192.000 HR	30.00000		5,760.00	
0095	4465000000-N TEMPORARY CRASH CUSHIONS	3.000 EA	10,000.00000		30,000.00	
0096	4480000000-N TMA	3.000 EA	31,800.00000		95,400.00	
0097	4485000000-E PORTABLE CONCRETE BARRIER	1,255.000 LF	27.00000		33,885.00	
0098	4510000000-N LAW ENFORCEMENT	296.000 HR	45.00000		13,320.00	
0099	4650000000-N TEMPORARY RAISED PAVEMENT MARKERS	205.000 EA	12.00000		2,460.00	
0100	4685000000-E THERMOPLAST IC PAVEMENT MARKINGLINES (4", 90 MILS)	10,008.000 LF	1.00000		10,008.00	
0101	4686000000-E THERMOPLAST IC PAVEMENT MARKING LINES (4", 120 MILS)	4,915.000 LF	1.00000		4,915.00	
0102	4695000000-E THERMOPLAST IC PAVEMENT MARKINGLINES (8", 90 MILS)	1,922.000 LF	1.85000		3,555.70	
0103	4697000000-E THERMOPLAST IC PAVEMENT MARKINGLINES (8", 120 MILS)	806.000 LF	2.55000		2,055.30	

Contract ID: C203994 Project(s): STATE FUNDED
Letting Date: 12-19-17 Call Order: 006
Bidder: 3740 - Blythe Development Co

Line No.	Item Description	Approx. Quantity and Units	Unit Price Dollars	Unit Price Cts	Bid Amount Dollars	Bid Amount Ct
0104	4700000000-E THERMOPLASTIC PAVEMENT MARKINGLINES (12", 90 MILS)	324.000 LF	3.40000		1,101.60	
0105	4710000000-E THERMOPLASTIC PAVEMENT MARKINGLINES (24", 120 MILS)	436.000 LF	12.50000		5,450.00	
0106	4721000000-E THERMOPLASTIC PAVEMENT MARKINGCHARACTER (120 MILS)	74.000 EA	165.00000		12,210.00	
0107	4725000000-E THERMOPLASTIC PAVEMENT MARKINGSYMBOL (90 MILS)	75.000 EA	190.00000		14,250.00	
0108	4770000000-E COLD APPLIED PLASTIC PAVEMENT MARKING LINES, TYPE ** (4") (II)	603.000 LF	8.00000		4,824.00	
0109	4770000000-E COLD APPLIED PLASTIC PAVEMENT MARKING LINES, TYPE ** (4") (IV)	473.000 LF	4.55000		2,152.15	
0110	4810000000-E PAINT PAVEMENT MARKING LINES (4")	21,900.000 LF	0.35000		7,665.00	
0111	4820000000-E PAINT PAVEMENT MARKING LINES (8")	810.000 LF	0.70000		567.00	
0112	4825000000-E PAINT PAVEMENT MARKING LINES (12")	142.000 LF	3.40000		482.80	
0113	4835000000-E PAINT PAVEMENT MARKING LINES (24")	244.000 LF	6.85000		1,671.40	
0114	4840000000-N PAINT PAVEMENT MARKING CHARAC-TER	24.000 EA	51.00000		1,224.00	

Contract ID: C203994 Project(s): STATE FUNDED
Letting Date: 12-19-17 Call Order: 006
Bidder: 3740 - Blythe Development Co

Line No.	Item Description	Approx. Quantity and Units	Unit Price Dollars	Unit Price Cts	Bid Amount Dollars	Bid Amount Ct
0115	4845000000-N PAINT PAVEMENT MARKING SYMBOL	68.000 EA	68.00000		4,624.00	
0116	4850000000-E REMOVAL OF PAVEMENT MARKING LINES (4")	4,069.000 LF	1.15000		4,679.35	
0117	4860000000-E REMOVAL OF PAVEMENT MARKING LINES (8")	36.000 LF	11.40000		410.40	
0118	4870000000-E REMOVAL OF PAVEMENT MARKING LINES (24")	48.000 LF	22.75000		1,092.00	
0119	4875000000-N REMOVAL OF PAVEMENT MARKING SYMBOLS & CHARACTERS	27.000 EA	73.85000		1,993.95	
0120	4900000000-N PERMANENT RAISED PAVEMENT MARKERS	24.000 EA	60.00000		1,440.00	
0121	4905000000-N SNOWPLOWABLE PAVEMENT MARKERS	199.000 EA	48.00000		9,552.00	
0122	5255000000-N PORTABLE LIGHTING	LUMP	LUMP		200,000.00	
0123	5326200000-E 12" WATER LINE	107.000 LF	115.00000		12,305.00	
0124	5326600000-E 16" WATER LINE	424.000 LF	115.00000		48,760.00	
0125	5329000000-E DUCTILE IRON WATER PIPE FITTINGS	1,185.000 LB	15.00000		17,775.00	
0126	5572200000-E 12" TAPPING VALVE	1.000 EA	8,000.00000		8,000.00	

Contract ID: C203994 Project(s): STATE FUNDED
Letting Date: 12-19-17 Call Order: 006
Bidder: 3740 - Blythe Development Co

Line No.	Item Description	Approx. Quantity and Units	Unit Price Dollars	Unit Price Cts	Bid Amount Dollars	Bid Amount Ct
0127	5643200000-E 2" WATER METER	1.000 EA	3,435.00000		3,435.00	
0128	5656200000-E 2" RPZ BACKFLOW PREVENTION ASSEMBLY	1.000 EA	2,625.00000		2,625.00	
0129	5691000000-E **" SANITARY GRAVITY SEWER (15")	40.000 LF	165.00000		6,600.00	
0130	5776000000-E 5' DIA UTILITY MANHOLE	1.000 EA	3,000.00000		3,000.00	
0131	5782000000-E UTILITY MANHOLE WALL, 5' DIA	8.000 LF	185.00000		1,480.00	
0132	5798000000-E ABANDON **" UTILITY PIPE (15")	40.000 LF	35.00000		1,400.00	
0133	5804000000-E ABANDON 12" UTILITY PIPE	610.000 LF	13.00000		7,930.00	
0134	5828000000-N REMOVE UTILITY MANHOLE	1.000 EA	1,080.00000		1,080.00	
0135	5871900000-E TRENCHLESS INSTALLATION OF 16"IN SOIL	212.000 LF	300.00000		63,600.00	
0136	5871910000-E TRENCHLESS INSTALLATION OF 16"NOT IN SOIL	212.000 LF	575.00000		121,900.00	
0137	6000000000-E TEMPORARY SILT FENCE	1,600.000 LF	2.85000		4,560.00	
0138	6006000000-E STONE FOR EROSION CONTROL, CLASS A	310.000 TON	55.00000		17,050.00	

Contract ID: C203994 Project(s): STATE FUNDED
Letting Date: 12-19-17 Call Order: 006
Bidder: 3740 - Blythe Development Co

Line No.	Item Description	Approx. Quantity and Units	Unit Price Dollars	Unit Price Cts	Bid Amount Dollars	Bid Amount Ct
0139	6009000000-E STONE FOR EROSION CONTROL, CLASS B	135.000 TON	55.00000		7,425.00	
0140	6012000000-E SEDIMENT CONTROL STONE	490.000 TON	50.00000		24,500.00	
0141	6015000000-E TEMPORARY MULCHING	4.000 ACR	1,365.00000		5,460.00	
0142	6018000000-E SEED FOR TEMPORARY SEEDING	300.000 LB	7.00000		2,100.00	
0143	6021000000-E FERTILIZER FOR TEMPORARY SEED-ING	1.500 TON	1,930.00000		2,895.00	
0144	6024000000-E TEMPORARY SLOPE DRAINS	200.000 LF	19.00000		3,800.00	
0145	6029000000-E SAFETY FENCE	200.000 LF	1.70000		340.00	
0146	6030000000-E SILT EXCAVATION	280.000 CY	10.00000		2,800.00	
0147	6036000000-E MATTING FOR EROSION CONTROL	3,000.000 SY	2.25000		6,750.00	
0148	6037000000-E COIR FIBER MAT	100.000 SY	4.55000		455.00	
0149	6042000000-E 1/4" HARDWARE CLOTH	1,600.000 LF	4.00000		6,400.00	
0150	6071012000-E COIR FIBER WATTLE	170.000 LF	7.00000		1,190.00	

Contract ID: C203994 Project(s): STATE FUNDED
Letting Date: 12-19-17 Call Order: 006
Bidder: 3740 - Blythe Development Co

Line No.	Item Description	Approx. Quantity and Units	Unit Price Dollars	Unit Price Cts	Bid Amount Dollars	Bid Amount Ct
0151	6071020000-E POLYACRYLAMIDE (PAM)	50.000 LB	10.00000		500.00	
0152	6084000000-E SEEDING & MULCHING	3.000 ACR	2,500.00000		7,500.00	
0153	6087000000-E MOWING	1.500 ACR	300.00000		450.00	
0154	6090000000-E SEED FOR REPAIR SEEDING	50.000 LB	9.00000		450.00	
0155	6093000000-E FERTILIZER FOR REPAIR SEEDING	0.250 TON	3,400.00000		850.00	
0156	6096000000-E SEED FOR SUPPLEMENTAL SEEDING	100.000 LB	5.75000		575.00	
0157	6108000000-E FERTILIZER TOPDRESSING	3.000 TON	1,930.00000		5,790.00	
0158	6114500000-N SPECIALIZED HAND MOWING	15.000 MHR	50.00000		750.00	
0159	6117000000-N RESPONSE FOR EROSION CONTROL	15.000 EA	400.00000		6,000.00	
0160	6132000000-N GENERIC EROSION CONTROL ITEM CONCRETE WASHOUT STRUCTURE	3.000 EA	750.00000		2,250.00	
0161	7048500000-E PEDESTRIAN SIGNAL HEAD (16", 1SECTION W/COUNTDOWN)	6.000 EA	815.00000		4,890.00	

Line No.	Item Description	Approx. Quantity and Units	Unit Price Dollars	Unit Price Cts	Bid Amount Dollars	Bid Amount Ct
0162	7060000000-E SIGNAL CABLE	7,950.000 LF	1.40000		11,130.00	
0163	7120000000-E VEHICLE SIGNAL HEAD (12", 3 SECTION)	40.000 EA	900.00000		36,000.00	
0164	7132000000-E VEHICLE SIGNAL HEAD (12", 4 SECTION)	3.000 EA	1,070.00000		3,210.00	
0165	7144000000-E VEHICLE SIGNAL HEAD (12", 5 SECTION)	3.000 EA	1,420.00000		4,260.00	
0166	7264000000-E MESSENGER CABLE (3/8")	1,030.000 LF	10.25000		10,557.50	
0167	7279000000-E TRACER WIRE	2,600.000 LF	0.65000		1,690.00	
0168	7300000000-E UNPAVED TRENCHING (**********) (1, 2")	1,275.000 LF	7.25000		9,243.75	
0169	7300000000-E UNPAVED TRENCHING (**********) (2, 2")	105.000 LF	9.40000		987.00	
0170	7300000000-E UNPAVED TRENCHING (**********) (3, 2")	50.000 LF	11.00000		550.00	
0171	7300000000-E UNPAVED TRENCHING (**********) (4, 2")	125.000 LF	13.00000		1,625.00	
0172	7301000000-E DIRECTIONAL DRILL (**********) (1, 2")	2,600.000 LF	14.20000		36,920.00	
0173	7301000000-E DIRECTIONAL DRILL (**********) (2, 2")	160.000 LF	20.25000		3,240.00	

Contract ID: C203994 Project(s): STATE FUNDED
Letting Date: 12-19-17 Call Order: 006
Bidder: 3740 - Blythe Development Co

Line No.	Item Description	Approx. Quantity and Units	Unit Price Dollars	Unit Price Cts	Bid Amount Dollars	Bid Amount Ct
0174	7301000000-E DIRECTIONAL DRILL (**********) (3, 2")	150.000 LF	30.00000		4,500.00	
0175	7301000000-E DIRECTIONAL DRILL (**********) (4, 2")	150.000 LF	38.00000		5,700.00	
0176	7324000000-N JUNCTION BOX (STANDARD SIZE)	13.000 EA	400.00000		5,200.00	
0177	7348000000-N JUNCTION BOX (OVER-SIZED, HEA-VY DUTY)	15.000 EA	725.00000		10,875.00	
0178	7360000000-N WOOD POLE	3.000 EA	1,540.00000		4,620.00	
0179	7372000000-N GUY ASSEMBLY	12.000 EA	685.00000		8,220.00	
0180	7420000000-E 2" RISER WITH WEATHERHEAD	5.000 EA	630.00000		3,150.00	
0181	7444000000-E INDUCTIVE LOOP SAWCUT	8,550.000 LF	7.40000		63,270.00	
0182	7456000000-E LEAD-IN CABLE (**********) (14-2)	15,000.000 LF	1.15000		17,250.00	
0183	7481000000-N SITE SURVEY	2.000 EA	1,400.00000		2,800.00	
0184	7481240000-N CAMERA WITHOUT INTERNAL LOOP EMULATOR PROCESSING UNIT	5.000 EA	3,600.00000		18,000.00	
0185	7481260000-N EXTERNAL LOOP EMULATOR PRO-CESSING UNIT	2.000 EA	4,260.00000		8,520.00	

Contract ID: C203994 Project(s): STATE FUNDED
Letting Date: 12-19-17 Call Order: 006
Bidder: 3740 - Blythe Development Co

Line No.	Item Description	Approx. Quantity and Units	Unit Price Dollars	Unit Price Cts	Bid Amount Dollars	Bid Amount Ct
0186	7516000000-E COMMUNICATIONS CABLE (**FIBER) (12)	400.000 LF	2.30000		920.00	
0187	7516000000-E COMMUNICATIONS CABLE (**FIBER) (24)	3,100.000 LF	2.35000		7,285.00	
0188	7540000000-N SPLICE ENCLOSURE	3.000 EA	1,150.00000		3,450.00	
0189	7541000000-N MODIFY SPLICE ENCLOSURE	2.000 EA	880.00000		1,760.00	
0190	7552000000-N INTERCONNECT CENTER	1.000 EA	1,135.00000		1,135.00	
0191	7566000000-N DELINEATOR MARKER	11.000 EA	90.00000		990.00	
0192	7575160000-E REMOVE EXISTING COMMUNICATIONSCABLE	300.000 LF	1.15000		345.00	
0193	7588000000-N METAL POLE WITH SINGLE MAST ARM	1.000 EA	23,000.00000		23,000.00	
0194	7613000000-N SOIL TEST	1.000 EA	2,615.00000		2,615.00	
0195	7614100000-E DRILLED PIER FOUNDATION	10.000 CY	855.00000		8,550.00	
0196	7631000000-N MAST ARM WITH METAL POLE DE- SIGN	1.000 EA	625.00000		625.00	
0197	7636000000-N SIGN FOR SIGNALS	8.000 EA	360.00000		2,880.00	

Contract ID: C203994 Project(s): STATE FUNDED
Letting Date: 12-19-17 Call Order: 006
Bidder: 3740 - Blythe Development Co

Line No.	Item Description	Approx. Quantity and Units	Unit Price Dollars	Unit Price Cts	Bid Amount Dollars	Bid Amount Ct
0198	7642200000-N TYPE II PEDESTAL WITH FOUNDATION	10.000 EA	1,700.00000		17,000.00	
0199	7684000000-N SIGNAL CABINET FOUNDATION	1.000 EA	1,050.00000		1,050.00	
0200	7686000000-N CONDUIT ENTRANCE INTO EXISTINGFOUNDATION	3.000 EA	510.00000		1,530.00	
0201	7756000000-N CONTROLLER WITH CABINET (TYPE 2070L, BASE MOUNTED)	1.000 EA	16,000.00000		16,000.00	
0202	7780000000-N DETECTOR CARD (TYPE 2070L)	11.000 EA	130.00000		1,430.00	
0203	7901000000-N CABINET BASE EXTENDER	1.000 EA	475.00000		475.00	
0204	7980000000-N GENERIC SIGNAL ITEM FURNISH & INSTALL NEW 2070E CONTROLLER IN EXISTING CABINET	2.000 EA	2,840.00000		5,680.00	
0205	7990000000-E GENERIC SIGNAL ITEM BACK PULL FIBER OPTIC CABLE	325.000 LF	1.70000		552.50	
	Section 0001 Total				5,458,131.00	

Section 0003 WALL ITEMS

Alt Group

Line No.	Item Description	Approx. Quantity and Units	Unit Price Dollars	Unit Price Cts	Bid Amount Dollars	Bid Amount Ct
0206	8801000000-E MSE RETAINING WALL NO **** (1)	4,055.000 SF	56.00000		227,080.00	

Line No.	Item Description	Approx. Quantity and Units	Unit Price Dollars	Unit Price Cts	Bid Amount Dollars	Bid Amount Ct
0207	8801000000-E MSE RETAINING WALL NO **** (2)	5,195.000 SF	57.00000		296,115.00	
0208	8801000000-E MSE RETAINING WALL NO **** (3)	8,220.000 SF	55.50000		456,210.00	
0209	8801000000-E MSE RETAINING WALL NO **** (4)	4,425.000 SF	70.00000		309,750.00	
	Section 0003 Total				1,289,155.00	

Section 0004 STRUCTURE ITEMS

Alt Group

0210	8084000000-N FOUNDATION EXCAVATION FOR END BENT ** AT STATION ********** (1, 15+75.56 -Y1-)	LUMP	LUMP		30,000.00	
0211	8084000000-N FOUNDATION EXCAVATION FOR END BENT ** AT STATION ********** (2, 15+75.56 -Y1-)	LUMP	LUMP		37,000.00	
0212	8154000000-E REINFORCED CONCRETE DECK SLAB (SAND LIGHTWEIGHT CONC)	11,151.000 SF	29.00000		323,379.00	
0213	8161000000-E GROOVING BRIDGE FLOORS	12,228.000 SF	0.40000		4,891.20	
0214	8182000000-E CLASS A CONCRETE (BRIDGE)	1,083.800 CY	495.00000		536,481.00	
0215	8210000000-N BRIDGE APPROACH SLABS, STATION********** (15+75.56 -Y1-)	LUMP	LUMP		70,930.00	

Contract ID: C203994 Project(s): STATE FUNDED
Letting Date: 12-19-17 Call Order: 006
Bidder: 3740 - Blythe Development Co

Line No.	Item Description	Approx. Quantity and Units	Unit Price Dollars	Unit Price Cts	Bid Amount Dollars	Bid Amount Ct
0216	8217000000-E REINFORCING STEEL (BRIDGE)	144,474.000 LB	0.75000		108,355.50	
0217	8280000000-E APPROX ..... LBS STRUCTURALSTEEL	LUMP	LUMP		1,812,600.00	
0218	8503000000-E CONCRETE BARRIER RAIL	405.000 LF	78.00000		31,590.00	
0219	8654000000-N DISC BEARINGS	LUMP	LUMP		50,000.00	
0220	8706000000-N EXPANSION JOINT SEALS	LUMP	LUMP		69,000.00	
0221	8727000000-N ELECTRICAL CONDUIT SYSTEM FOR SIGNALS AT STA********** (15+75.56 -Y1-)	LUMP	LUMP		21,915.00	
0222	8867000000-E GENERIC STRUCTURE ITEM CONCRETE BARRIER RAIL WITH MOMENT SLAB	1,588.200 LF	235.00000		373,227.00	
	Section 0004 Total				3,469,368.70	
	Bid Total				10,216,654.70	

NON-COLLUSION AND DEBARMENT CERTIFICATION

The bidder certifies that neither he, nor any official, agent or employee of the bidder has entered into any agreement, participated in any collusion, or otherwise taken any action which is in restraint of free competitive bidding in connection with this bid, and that the bidder intends to do the work with its own bonafide employees or subcontractors and is not bidding for the benefit of another contractor. In addition, submitting this electronic bid constitutes the bidder's certification of Status under penalty of perjury under the laws of the United States and in accordance with the Debarment Certification on file with the Department.

By submitting this bid, the bidder certifies to the best of his knowledge and belief that he and his principals:

a. Are not presently debarred, suspended, proposed for debarment, declared ineligible, or voluntarily excluded from covered transactions by any Federal department or agency;

b. Have not within a three-year period preceding this proposal been convicted of or had a civil judgment rendered against them for commission of fraud or a criminal offense in connection with obtaining, attempting to obtain, or performing a public (Federal, State or local) transaction or contract under a public transaction; violation of Federal or State antitrust statutes or commission of embezzlement, theft, forgery, bribery, falsification or destruction of records; making false statements; or receiving stolen property;

c. Are not presently indicted for or otherwise criminally or civilly charged by a governmental entity (Federal, State or local) with commission of any of the offenses enumerated in paragraph b. of this certification; and

d. Have not within a three-year period preceding this proposal had one or more public transactions (Federal, State or local) terminated for cause or default.

Where the prospective bidder is unable to certify to any of the statements in this certification, the bidder shall submit an explanation in the blanks provided herein. The explanation will not necessarily result in denial of participation in a contract.

Explanation:
NOT ANSWERED
NOT ANSWERED
NOT ANSWERED
NOT ANSWERED

If the prequalified bidder's status changes, he shall immediately submit a new fully executed non-collusion affidavit and debarment certification with an explanation of the change to the Contract Office prior to submitting the bid.

Failure to furnish a certification or an explanation will be grounds for rejection of a bid

AWARD LIMITS ON MULTIPLE PROJECTS

By answering YES to this statement, the bidder acknowleges that they are using the award limits on multiple projects. No

A bidder who desires to bid on more than one project on which bids are to be opened on the same date, and who also desires to avoid receiving an award of more projects than he is equipped to handle, may bid on any number of projects but may limit the total amount of work awarded to him on selected projects by completing the AWARD LIMITS ON MULTIPLE PROJECTS.

The Award Limits on Multiple Projects must be filled in on each project bid for which the Bidder desires protection.

It is the desire of the Bidder to be awarded contracts, the value of which

will not exceed a total of NOT ANSWERED for those

projects indicated herein, for which bids will be opened on (MM/DD/YY)

The Award Limits shall apply to the following projects:

Contract Number	County
NOT ANSWERED	
NOT ANSWERED	
NOT ANSWERED	
NOT ANSWERED	
NOT ANSWERED	
NOT ANSWERED	

It is agreed that if I am (we are) the low Bidder(s) on indicated projects, the total value of which is more than the above stipulated award limits, the Board of Transportation will award me (us) projects from among those indicated that have a total value not to exceed the award limit and will result in the lowest total bids to the Department of Transportation.

PROPOSAL: C203994
LETTING: L171219 CALL: 006
VENDOR: 3740 Blythe Development Co

LINE NO.	ITEM NO.	ITEM DESC.	UNIT TYPE	SUBCONTRACTOR QUANTITY	SUBCONTRACTOR UNIT PRICE	EXTENDED AMOUNT
MBE SUBCONTRACTOR: 7138 EXPRESS LOGISTICS SERVICES INC						
Will Use Quote: Yes						
0005	0195000000-E	SELECT GRANU	CY	200.000	6.30000	1260.00
0007	0318000000-E	FND CONDIT M	TON	380.000	3.50000	1330.00
0009	0448200000-E	15" RCP CULV	LF	1348.000	0.98000	1321.04
0010	0448300000-E	18" RCP CULV	LF	1052.000	1.12000	1178.24
0011	0448400000-E	24" RCP CULV	LF	468.000	1.36000	636.48
0012	0448500000-E	30" RCP CULV	LF	140.000	1.68000	235.20
0016	1099700000-E	CLASS IV SUB	TON	1000.000	3.50000	3500.00
0017	1110000000-E	STABILIZER A	TON	250.000	3.50000	875.00
0018	1220000000-E	INCIDENTAL S	TON	100.000	3.50000	350.00
0035	2286000000-N	MASNRY DRAIN	EA	44.000	3.50000	154.00
0069	3649000000-E	RIP RAP, CLA	TON	1.000	4.50000	4.50
0129	5691000000-E	**" SANITARY	LF	40.000	0.87000	34.80
0130	5776000000-E	5' DIA UTILI	EA	1.000	3.50000	3.50
0138	6006000000-E	EROS CONTRL	TON	310.000	4.50000	1395.00
0139	6009000000-E	EROS CONTRL	TON	135.000	4.50000	607.50
0140	6012000000-E	SEDIMENT CON	TON	490.000	3.50000	1715.00
0002	0043000000-N	GRADING	LS	1.000	106802.00000	106802.00
0004	0057000000-E	UNDERCUT EXC	CY	200.000	13.50000	2700.00
0013	0995000000-E	PIPE REMOVAL	LF	799.000	4.50000	3595.50
0015	1099500000-E	SHALLOW UNDE	CY	500.000	6.75000	3375.00
0206	8801000000-E	MSE RETAIN W	SF	4055.000	3.50000	14192.50
0207	8801000000-E	MSE RETAIN W	SF	5195.000	3.69000	19169.55
0209	8801000000-E	MSE RETAIN W	SF	4425.000	5.20000	23010.00
0208	8801000000-E	MSE RETAIN W	SF	8220.000	3.50000	28770.00
						216,214.81
MBE COMMITMENT TOTAL FOR SUBCONTRACTOR:						
MBE SUBCONTRACTOR: 11572 CRUZ BROTHERS CONCRETE, INC.						
Will Use Quote: Yes						
0046	2451000000-N	CONC TRANS S	EA	13.000	850.00000	11050.00
0047	2542000000-E	1'-6" CONC C	LF	2560.000	17.75000	45440.00
0048	2549000000-E	2'-6" CONC C	LF	2620.000	21.50000	56330.00
0049	2556000000-E	SHOULDER BER	LF	90.000	25.00000	2250.00
0050	2591000000-E	4" CONCRETE	SY	460.000	47.75000	21965.00
0051	2600000000-N	RETROFIT EXT	EA	3.000	2350.00000	7050.00
0052	2605000000-N	CONCRETE CUR	EA	8.000	2100.00000	16800.00
						160,885.00
MBE COMMITMENT TOTAL FOR SUBCONTRACTOR:						

TOTAL MBE COMMITMENT FOR VENDOR: Entered: 3.69% or 377099.81
Required: 3.00% or 306499.64
<GOAL MET>

PROPOSAL: C203994
LETTING: L171219 CALL: 006
VENDOR: 3740 Blythe Development Co

LINE NO.	ITEM NO.	ITEM DESC.	UNIT TYPE	SUBCONTRACTOR QUANTITY	SUBCONTRACTOR UNIT PRICE	EXTENDED AMOUNT
WBE SUBCONTRACTOR: 2759 SUPERIOR SEEDING INC Will Use Quote: Yes						
0141	6015000000-E	TEMPORARY MU	ACR	4.000	1200.00000	4800.00
0142	6018000000-E	SEED FOR TEM	LB	300.000	6.00000	1800.00
0143	6021000000-E	FERT FOR TEM	TON	1.500	1700.00000	2550.00
0147	6036000000-E	MATTING FOR	SY	3000.000	1.95000	5850.00
0148	6037000000-E	COIR FIBER M	SY	100.000	4.00000	400.00
0152	6084000000-E	SEEDING AND	ACR	3.000	2200.00000	6600.00
0154	6090000000-E	SEED FOR REP	LB	50.000	8.00000	400.00
0155	6093000000-E	FERT FOR REP	TON	0.250	3000.00000	750.00
0156	6096000000-E	SEED FOR SUP	LB	100.000	5.00000	500.00
0157	6108000000-E	FERTILIZER T	TON	3.000	1700.00000	5100.00
		WBE COMMITMENT TOTAL FOR SUBCONTRACTOR:				28,750.00
WBE SUBCONTRACTOR: 3376 REYNOLDS FENCE & GUARDRAIL INC Will Use Quote: Yes						
0060	3000000000-N	IMPACT ATTEN	EA	2.000	14500.00000	29000.00
0061	3030000000-E	STL BM GUARD	LF	225.000	15.60000	3510.00
0062	3150000000-N	ADDIT GUARDR	EA	5.000	35.00000	175.00
0063	3210000000-N	GR ANCHOR TY	EA	2.000	750.00000	1500.00
0064	3287000000-N	GR END TYPE	EA	3.000	2900.00000	8700.00
0065	3317000000-N	GR ANCHOR TY	EA	1.000	1550.00000	1550.00
0066	3345000000-E	REMOVE & RES	LF	87.500	5.00000	437.50
0067	3360000000-E	REMOVE EXIST	LF	298.000	2.00000	596.00
		WBE COMMITMENT TOTAL FOR SUBCONTRACTOR:				45,468.50
WBE SUBCONTRACTOR: 3080 CURTIN TRUCKING & DRAINAGE INC Will Use Quote: Yes						
0095	4465000000-N	TEMPORARY CR	EA	3.000	8250.00000	24750.00
0097	4485000000-E	PORT CONC BA	LF	1255.000	23.75000	29806.25
		WBE COMMITMENT TOTAL FOR SUBCONTRACTOR:				54,556.25
WBE SUBCONTRACTOR: 5796 A1 PAVEMENT MARKING LLC Will Use Quote: Yes						
0001	0000100000-N	MOBILIZATION	LS	1.000	12500.00000	12500.00
0099	4650000000-N	TEMP RAISED	EA	205.000	10.00000	2050.00
0100	4685000000-E	THERMO PVT M	LF	10008.000	0.72000	7205.76
0101	4686000000-E	THERMO PVT M	LF	4915.000	0.78000	3833.70
0102	4695000000-E	THERMO PVT M	LF	1922.000	1.60000	3075.20
0103	4697000000-E	THERMO PVT M	LF	806.000	2.25000	1813.50

LINE NO.	ITEM NO.	ITEM DESC.	UNIT TYPE	SUBCONTRACTOR QUANTITY	SUBCONTRACTOR UNIT PRICE	EXTENDED AMOUNT
0104	4700000000-E	12"WIDE THER	LF	324.000	3.00000	972.00
0105	4710000000-E	24"WIDE THER	LF	436.000	11.00000	4796.00
0106	4721000000-E	THERMO PVT M	EA	74.000	145.00000	10730.00
0107	4725000000-E	THERMO PVT S	EA	75.000	165.00000	12375.00
0108	4770000000-E	4" COLD APPL	LF	603.000	7.00000	4221.00
0109	4770000000-E	4" COLD APPL	LF	473.000	4.00000	1892.00
0110	4810000000-E	PAINT PVMT M	LF	21900.000	0.30000	6570.00
0111	4820000000-E	PAINT PVMT M	LF	810.000	0.60000	486.00
0112	4825000000-E	PAINT PVMT M	LF	142.000	3.00000	426.00
0113	4835000000-E	PAINT PVT MK	LF	244.000	6.00000	1464.00
0114	4840000000-N	PAINT PVT MK	EA	24.000	45.00000	1080.00
0115	4845000000-N	PAINT PVT MK	EA	68.000	60.00000	4080.00
0116	4850000000-E	LINE REMOVAL	LF	4069.000	1.00000	4069.00
0117	4860000000-E	LINE REMOVAL	LF	36.000	10.00000	360.00
0118	4870000000-E	LINE REMOVAL	LF	48.000	20.00000	960.00
0119	4875000000-N	REMOVAL OF S	EA	27.000	65.00000	1755.00
0120	4900000000-N	PERM RAISED	EA	24.000	50.00000	1200.00
0121	4905000000-N	SNOWPLB PVMT	EA	199.000	42.00000	8358.00
						96,272.16

WBE COMMITMENT TOTAL FOR SUBCONTRACTOR:

WBE SUBCONTRACTOR: 3765 STAY ALERT SAFETY SERVICES INC
Will Use Quote: Yes

0088	4415000000-N	FLASHING ARR	EA	3.000	2400.00000	7200.00
0089	4420000000-N	PORTABLE CHA	EA	2.000	10850.00000	21700.00
0090	4422000000-N	PORT CHANGE	DAY	30.000	55.00000	1650.00
0091	4430000000-N	DRUMS	EA	180.000	41.00000	7380.00
0092	4435000000-N	CONES	EA	50.000	16.00000	800.00
						38,730.00

WBE COMMITMENT TOTAL FOR SUBCONTRACTOR:

WBE SUBCONTRACTOR: 4761 TRAFFIC CONTROL SAFETY SERVICES, INC.
Will Use Quote: Yes

0074	4072000000-E	SUPPORT, 3-L	LF	300.000	7.88000	2364.00
0076	4102000000-N	SIGN ERECTIO	EA	24.000	100.00000	2400.00
0079	4116100000-N	SIGN ERECT,	EA	3.000	100.00000	300.00
0080	4155000000-N	DISPOSE SIGN	EA	23.000	2.00000	46.00
0081	4192000000-N	DISPOSE SUPP	EA	3.000	2.00000	6.00
0085	4400000000-E	WORK ZONE SI	SF	451.000	12.50000	5637.50
0086	4405000000-E	WORK ZONE SI	SF	372.000	9.25000	3441.00
0087	4410000000-E	WORK ZONE SI	SF	107.000	9.00000	963.00
0093	4445000000-E	BARRICADES (	LF	200.000	25.00000	5000.00
0084	4370000000-N	GENERIC SIGN	LS	1.000	28500.00000	28500.00
0083	4370000000-N	GENERIC SIGN	LS	1.000	47500.00000	47500.00
0082	4370000000-N	GENERIC SIGN	LS	1.000	45000.00000	45000.00
						141,157.50

WBE COMMITMENT TOTAL FOR SUBCONTRACTOR:

TOTAL WBE COMMITMENT FOR VENDOR:	Entered:	3.96%	or	404934.41
	Required:	3.00%	or	306499.64
				<GOAL MET>

THIS PROPOSAL CONTAINS THE FOLLOWING ERRORS/WARNINGS (IF ANY)

This Bid contains 1 amendment files

00001 12-07-17 REMOVAL OF #57 STONE

Electronic Bid Submission

By submitting this bid electronically, I hereby acknowledge that all requirements included in the hard copy proposal, addendum, amendments, plans, standard specifications, supplemental specifications and special provisions are part of the bid and contract. Further, I acknowledge that I have read, understand, accept, acknowledge and agree to comply with all statements in this electronic bid.

I Hereby certify that I have the authority to submit this bid.

Signature	Agency	Date

Contract Item Sheets For C203994

Line #	ItemNumber	Sec #	Description	Quantity Unit	Unit Bid Price	Amount Bid
			ROADWAY ITEMS			
0001	0000100000-N	800	MOBILIZATION	Lump Sum LS	510,000.00	510,000.00
0002	0043000000-N	226	GRADING	Lump Sum LS	953,700.00	953,700.00
0003	0050000000-E	226	SUPPLEMENTARY CLEARING & GRUBBING	1 ACR	8,000.00	8,000.00
0004	0057000000-E	226	UNDERCUT EXCAVATION	200 CY	35.00	7,000.00
0005	0195000000-E	265	SELECT GRANULAR MATERIAL	200 CY	46.00	9,200.00
0006	0196000000-E	270	GEOTEXTILE FOR SOIL STABILIZATION	1,700 SY	2.50	4,250.00
0007	0318000000-E	300	FOUNDATION CONDITIONING MATERIAL, MINOR STRUCTURES	380 TON	35.00	13,300.00
0008	0320000000-E	300	FOUNDATION CONDITIONING GEOTEXTILE	1,200 SY	2.50	3,000.00
0009	0448200000-E	310	15" RC PIPE CULVERTS, CLASS IV	1,348 LF	70.00	94,360.00
0010	0448300000-E	310	18" RC PIPE CULVERTS, CLASS IV	1,052 LF	80.00	84,160.00
0011	0448400000-E	310	24" RC PIPE CULVERTS, CLASS IV	468 LF	100.00	46,800.00
0012	0448500000-E	310	30" RC PIPE CULVERTS, CLASS IV	140 LF	117.00	16,380.00
0013	0995000000-E	340	PIPE REMOVAL	799 LF	21.30	17,018.70
0015	1099500000-E	505	SHALLOW UNDERCUT	500 CY	17.00	8,500.00
0016	1099700000-E	505	CLASS IV SUBGRADE STABILIZATION	1,000 TON	26.50	26,500.00
0017	1110000000-E	510	STABILIZER AGGREGATE	250 TON	26.80	6,700.00
0018	1220000000-E	545	INCIDENTAL STONE BASE	100 TON	27.25	2,725.00
0019	1297000000-E	607	MILLING ASPHALT PAVEMENT, ***" DEPTH (3")	29,950 SY	2.75	82,362.50
0020	1330000000-E	607	INCIDENTAL MILLING	300 SY	10.00	3,000.00

Contract Item Sheets For C203994

Line #	ItemNumber	Sec #	Description	Quantity Unit	Unit Bid Price	Amount Bid
0021	1489000000-E	610	ASPHALT CONC BASE COURSE, TYPE B25.0B	1,100 TON	65.50	72,050.00
0022	1491000000-E	610	ASPHALT CONC BASE COURSE, TYPE B25.0C	1,870 TON	65.50	122,485.00
0023	1498000000-E	610	ASPHALT CONC INTERMEDIATE COURSE, TYPE I19.0B	620 TON	65.50	40,610.00
0024	1503000000-E	610	ASPHALT CONC INTERMEDIATE COURSE, TYPE I19.0C	1,670 TON	65.50	109,385.00
0025	1519000000-E	610	ASPHALT CONC SURFACE COURSE, TYPE S9.5B	1,560 TON	60.00	93,600.00
0026	1523000000-E	610	ASPHALT CONC SURFACE COURSE, TYPE S9.5C	5,120 TON	60.00	307,200.00
0027	1575000000-E	620	ASPHALT BINDER FOR PLANT MIX	640 TON	425.00	272,000.00
0028	1693000000-E	654	ASPHALT PLANT MIX, PAVEMENT REPAIR	1,854 TON	125.00	231,750.00
0029	2022000000-E	815	SUBDRAIN EXCAVATION	45 CY	35.00	1,575.00
0030	2026000000-E	815	GEOTEXTILE FOR SUBSURFACE DRAINS	200 SY	10.25	2,050.00
0031	2036000000-E	815	SUBDRAIN COARSE AGGREGATE	34 CY	74.00	2,516.00
0032	2044000000-E	815	6" PERFORATED SUBDRAIN PIPE	200 LF	17.00	3,400.00
0033	2070000000-N	815	SUBDRAIN PIPE OUTLET	1 EA	400.00	400.00
0034	2077000000-E	815	6" OUTLET PIPE	6 LF	40.00	240.00
0035	2286000000-N	840	MASONRY DRAINAGE STRUCTURES	44 EA	1,800.00	79,200.00
0036	2308000000-E	840	MASONRY DRAINAGE STRUCTURES	23.8 LF	200.00	4,760.00
0037	2364000000-N	840	FRAME WITH TWO GRATES, STD 840.16	2 EA	710.00	1,420.00
0038	2364200000-N	840	FRAME WITH TWO GRATES, STD 840.20	19 EA	655.00	12,445.00

Line #	ItemNumber	Sec #	Description	Quantity Unit	Unit Bid Price	Amount Bid
0039	2365000000-N	840	FRAME WITH TWO GRATES, STD 840.22	5 EA	650.00	3,250.00
0040	2366000000-N	840	FRAME WITH TWO GRATES, STD 840.24	1 EA	640.00	640.00
0041	2367000000-N	840	FRAME WITH TWO GRATES, STD 840.29	5 EA	650.00	3,250.00
0042	2374000000-N	840	FRAME WITH GRATE & HOOD, STD 840.03, TYPE ** (E)	6 EA	750.00	4,500.00
0043	2374000000-N	840	FRAME WITH GRATE & HOOD, STD 840.03, TYPE ** (F)	5 EA	775.00	3,875.00
0044	2374000000-N	840	FRAME WITH GRATE & HOOD, STD 840.03, TYPE ** (G)	1 EA	775.00	775.00
0045	2396000000-N	840	FRAME WITH COVER, STD 840.54	1 EA	470.00	470.00
0046	2451000000-N	852	CONCRETE TRANSITIONAL SECTION FOR DROP INLET	13 EA	965.00	12,545.00
0047	2542000000-E	846	1'-6" CONCRETE CURB & GUTTER	2,560 LF	20.00	51,200.00
0048	2549000000-E	846	2'-6" CONCRETE CURB & GUTTER	2,620 LF	24.00	62,880.00
0049	2556000000-E	846	SHOULDER BERM GUTTER	90 LF	28.40	2,556.00
0050	2591000000-E	848	4" CONCRETE SIDEWALK	460 SY	54.25	24,955.00
0051	2600000000-N	SP	RETROFIT EXISTING CURB RAMP	3 EA	2,680.00	8,040.00
0052	2605000000-N	848	CONCRETE CURB RAMP	8 EA	2,385.00	19,080.00
0053	2655000000-E	852	5" MONOLITHIC CONCRETE ISLANDS (KEYED IN)	1,800 SY	83.10	149,580.00
0054	2724000000-E	857	PRECAST REINFORCED CONCRETE BARRIER, SINGLE FACED	1,250 LF	95.00	118,750.00
0055	2800000000-N	858	ADJUSTMENT OF CATCH BASINS	3 EA	683.00	2,049.00
0056	2815000000-N	858	ADJUSTMENT OF DROP INLETS	3 EA	685.00	2,055.00

Line #	ItemNumber	Sec #	Description	Quantity Unit	Unit Bid Price	Amount Bid
0057	2830000000-N	858	ADJUSTMENT OF MANHOLES	2 EA	500.00	1,000.00
0058	2845000000-N	858	ADJUSTMENT OF METER BOXES OR VALVE BOXES	20 EA	615.00	12,300.00
0059	2995000000-N	SP	GENERIC DRAINAGE ITEM CONVERT EXISTING CATCH BASIN TO TRAFFIC BEARING JUNCTION BOX WITH MANHOLE	1 EA	655.00	655.00
0060	3000000000-N	SP	IMPACT ATTENUATOR UNIT, TYPE 350	2 EA	19,160.00	38,320.00
0061	3030000000-E	862	STEEL BM GUARDRAIL	225 LF	18.00	4,050.00
0062	3150000000-N	862	ADDITIONAL GUARDRAIL POSTS	5 EA	40.00	200.00
0063	3210000000-N	862	GUARDRAIL ANCHOR UNITS, TYPE CAT-1	2 EA	855.00	1,710.00
0064	3287000000-N	SP	GUARDRAIL END UNITS, TYPE TL-3	3 EA	3,295.00	9,885.00
0065	3317000000-N	862	GUARDRAIL ANCHOR UNITS, TYPE B-77	1 EA	1,760.00	1,760.00
0066	3345000000-E	864	REMOVE & RESET EXISTING GUARD-RAIL	87.5 LF	6.00	525.00
0067	3360000000-E	863	REMOVE EXISTING GUARDRAIL	298 LF	2.30	685.40
0068	3575000000-E	SP	GENERIC FENCING ITEM TEMPORARY 48" CHAIN LINK FENCE WITH POSTS	330 LF	13.00	4,290.00
0069	3649000000-E	876	RIP RAP, CLASS B	1 TON	255.00	255.00
0070	3656000000-E	876	GEOTEXTILE FOR DRAINAGE	575 SY	2.15	1,236.25
0071	4054000000-E	902	PLAIN CONCRETE SIGN FOUNDA-TIONS	1 CY	6.00	6.00
0072	4057000000-E	SP	OVERHEAD FOOTING	71 CY	1,535.00	108,985.00
0073	4060000000-E	903	SUPPORTS, BREAKAWAY STEEL BEAM	216 LB	9.00	1,944.00
0074	4072000000-E	903	SUPPORTS, 3-LB STEEL U-CHANNEL	300 LF	9.00	2,700.00

Line #	ItemNumber	Sec #	Description	Quantity Unit	Unit Bid Price	Amount Bid
0075	4082100000-N	SP	SUPPORTS, OVERHEAD SIGN STRUCTURE AT STA ****** (34+94 -L-)	Lump Sum LS	65,000.00	65,000.00
0076	4102000000-N	904	SIGN ERECTION, TYPE E	24 EA	115.00	2,760.00
0077	4109000000-N	904	SIGN ERECTION, TYPE *** (OVERHEAD) (A)	11 EA	1,080.00	11,880.00
0078	4110000000-N	904	SIGN ERECTION, TYPE *** (GROUND MOUNTED) (A)	1 EA	1,080.00	1,080.00
0079	4116100000-N	904	SIGN ERECTION, RELOCATE, TYPE **** (GROUND MOUNTED) (E)	3 EA	115.00	345.00
0080	4155000000-N	907	DISPOSAL OF SIGN SYSTEM, U-CHANNEL	23 EA	2.50	57.50
0081	4192000000-N	907	DISPOSAL OF SUPPORT, U-CHANNEL	3 EA	2.50	7.50
0082	4370000000-N	SP	GENERIC SIGNING ITEM SUPPORTS, OVERHEAD SIGN STR AT I-85 SB EXIT RAMP	Lump Sum LS	52,000.00	52,000.00
0083	4370000000-N	SP	GENERIC SIGNING ITEM SUPPORTS, OVERHEAD SIGN STR AT WB BRUTON SMITH E OF I-85 NB RAMP	Lump Sum LS	54,000.00	54,000.00
0084	4370000000-N	SP	GENERIC SIGNING ITEM SUPPORTS, OVERHEAD SIGN STR AT WB CONCORD MILLS AT I-85 SB LOOP	Lump Sum LS	32,400.00	32,400.00
0085	4400000000-E	1110	WORK ZONE SIGNS (STATIONARY)	451 SF	15.00	6,765.00
0086	4405000000-E	1110	WORK ZONE SIGNS (PORTABLE)	372 SF	10.50	3,906.00
0087	4410000000-E	1110	WORK ZONE SIGNS (BARRICADE MOUNTED)	107 SF	10.25	1,096.75
0088	4415000000-N	1115	FLASHING ARROW BOARD	3 EA	2,725.00	8,175.00
0089	4420000000-N	1120	PORTABLE CHANGEABLE MESSAGE SIGN	2 EA	12,320.00	24,640.00
0090	4422000000-N	1120	PORTABLE CHANGEABLE MESSAGE SIGN (SHORT TERM)	30 DAY	62.00	1,860.00

Contract Item Sheets For C203994

Line #	ItemNumber	Sec #	Description	Quantity Unit	Unit Bid Price	Amount Bid
0091	4430000000-N	1130	DRUMS	180 EA	50.00	9,000.00
0092	4435000000-N	1135	CONES	50 EA	20.00	1,000.00
0093	4445000000-E	1145	BARRICADES (TYPE III)	200 LF	30.00	6,000.00
0094	4450000000-N	1150	FLAGGER	192 HR	30.00	5,760.00
0095	4465000000-N	1160	TEMPORARY CRASH CUSHIONS	3 EA	10,000.00	30,000.00
0096	4480000000-N	1165	TMA	3 EA	31,800.00	95,400.00
0097	4485000000-E	1170	PORTABLE CONCRETE BARRIER	1,255 LF	27.00	33,885.00
0098	4510000000-N	SP	LAW ENFORCEMENT	296 HR	45.00	13,320.00
0099	4650000000-N	1251	TEMPORARY RAISED PAVEMENT MARKERS	205 EA	12.00	2,460.00
0100	4685000000-E	1205	THERMOPLASTIC PAVEMENT MARKING LINES (4", 90 MILS)	10,008 LF	1.00	10,008.00
0101	4686000000-E	1205	THERMOPLASTIC PAVEMENT MARKING LINES (4", 120 MILS)	4,915 LF	1.00	4,915.00
0102	4695000000-E	1205	THERMOPLASTIC PAVEMENT MARKING LINES (8", 90 MILS)	1,922 LF	1.85	3,555.70
0103	4697000000-E	1205	THERMOPLASTIC PAVEMENT MARKING LINES (8", 120 MILS)	806 LF	2.55	2,055.30
0104	4700000000-E	1205	THERMOPLASTIC PAVEMENT MARKING LINES (12", 90 MILS)	324 LF	3.40	1,101.60
0105	4710000000-E	1205	THERMOPLASTIC PAVEMENT MARKING LINES (24", 120 MILS)	436 LF	12.50	5,450.00
0106	4721000000-E	1205	THERMOPLASTIC PAVEMENT MARKING CHARACTER (120 MILS)	74 EA	165.00	12,210.00
0107	4725000000-E	1205	THERMOPLASTIC PAVEMENT MARKING SYMBOL (90 MILS)	75 EA	190.00	14,250.00
0108	4770000000-E	1205	COLD APPLIED PLASTIC PAVEMENT MARKING LINES, TYPE ** (4") (II)	603 LF	8.00	4,824.00

Contract Item Sheets For C203994

Line #	ItemNumber	Sec #	Description	Quantity Unit	Unit Bid Price	Amount Bid
0109	4770000000-E	1205	COLD APPLIED PLASTIC PAVEMENT MARKING LINES, TYPE ** (4") (IV)	473 LF	4.55	2,152.15
0110	4810000000-E	1205	PAINT PAVEMENT MARKING LINES (4")	21,900 LF	0.35	7,665.00
0111	4820000000-E	1205	PAINT PAVEMENT MARKING LINES (8")	810 LF	0.70	567.00
0112	4825000000-E	1205	PAINT PAVEMENT MARKING LINES (12")	142 LF	3.40	482.80
0113	4835000000-E	1205	PAINT PAVEMENT MARKING LINES (24")	244 LF	6.85	1,671.40
0114	4840000000-N	1205	PAINT PAVEMENT MARKING CHARAC-TER	24 EA	51.00	1,224.00
0115	4845000000-N	1205	PAINT PAVEMENT MARKING SYMBOL	68 EA	68.00	4,624.00
0116	4850000000-E	1205	REMOVAL OF PAVEMENT MARKING LINES (4")	4,069 LF	1.15	4,679.35
0117	4860000000-E	1205	REMOVAL OF PAVEMENT MARKING LINES (8")	36 LF	11.40	410.40
0118	4870000000-E	1205	REMOVAL OF PAVEMENT MARKING LINES (24")	48 LF	22.75	1,092.00
0119	4875000000-N	1205	REMOVAL OF PAVEMENT MARKING SYMBOLS & CHARACTERS	27 EA	73.85	1,993.95
0120	4900000000-N	1251	PERMANENT RAISED PAVEMENT MARKERS	24 EA	60.00	1,440.00
0121	4905000000-N	1253	SNOWPLOWABLE PAVEMENT MARKERS	199 EA	48.00	9,552.00
0122	5255000000-N	1413	PORTABLE LIGHTING	Lump Sum LS	200,000.00	200,000.00
0123	5326200000-E	1510	12" WATER LINE	107 LF	115.00	12,305.00
0124	5326600000-E	1510	16" WATER LINE	424 LF	115.00	48,760.00
0125	5329000000-E	SP	DUCTILE IRON WATER PIPE FITTINGS	1,185 LB	15.00	17,775.00
0126	5572200000-E	1515	12" TAPPING VALVE	1 EA	8,000.00	8,000.00

Line #	ItemNumber	Sec #	Description	Quantity Unit	Unit Bid Price	Amount Bid
0127	5643200000-E	1515	2" WATER METER	1 EA	3,435.00	3,435.00
0128	5656200000-E	1515	2" RPZ BACKFLOW PREVENTION ASSEMBLY	1 EA	2,625.00	2,625.00
0129	5691000000-E	1520	**" SANITARY GRAVITY SEWER (15")	40 LF	165.00	6,600.00
0130	5776000000-E	1525	5' DIA UTILITY MANHOLE	1 EA	3,000.00	3,000.00
0131	5782000000-E	1525	UTILITY MANHOLE WALL, 5' DIA	8 LF	185.00	1,480.00
0132	5798000000-E	1530	ABANDON **" UTILITY PIPE (15")	40 LF	35.00	1,400.00
0133	5804000000-E	1530	ABANDON 12" UTILITY PIPE	610 LF	13.00	7,930.00
0134	5828000000-N	1530	REMOVE UTILITY MANHOLE	1 EA	1,080.00	1,080.00
0135	5871900000-E	1550	TRENCHLESS INSTALLATION OF 16" IN SOIL	212 LF	300.00	63,600.00
0136	5871910000-E	1550	TRENCHLESS INSTALLATION OF 16" NOT IN SOIL	212 LF	575.00	121,900.00
0137	6000000000-E	1605	TEMPORARY SILT FENCE	1,600 LF	2.85	4,560.00
0138	6006000000-E	1610	STONE FOR EROSION CONTROL, CLASS A	310 TON	55.00	17,050.00
0139	6009000000-E	1610	STONE FOR EROSION CONTROL, CLASS B	135 TON	55.00	7,425.00
0140	6012000000-E	1610	SEDIMENT CONTROL STONE	490 TON	50.00	24,500.00
0141	6015000000-E	1615	TEMPORARY MULCHING	4 ACR	1,365.00	5,460.00
0142	6018000000-E	1620	SEED FOR TEMPORARY SEEDING	300 LB	7.00	2,100.00
0143	6021000000-E	1620	FERTILIZER FOR TEMPORARY SEED-ING	1.5 TON	1,930.00	2,895.00
0144	6024000000-E	1622	TEMPORARY SLOPE DRAINS	200 LF	19.00	3,800.00
0145	6029000000-E	SP	SAFETY FENCE	200 LF	1.70	340.00

Line #	ItemNumber	Sec #	Description	Quantity Unit	Unit Bid Price	Amount Bid
0146	6030000000-E	1630	SILT EXCAVATION	280 CY	10.00	2,800.00
0147	6036000000-E	1631	MATTING FOR EROSION CONTROL	3,000 SY	2.25	6,750.00
0148	6037000000-E	SP	COIR FIBER MAT	100 SY	4.55	455.00
0149	6042000000-E	1632	1/4" HARDWARE CLOTH	1,600 LF	4.00	6,400.00
0150	6071012000-E	SP	COIR FIBER WATTLE	170 LF	7.00	1,190.00
0151	6071020000-E	SP	POLYACRYLAMIDE (PAM)	50 LB	10.00	500.00
0152	6084000000-E	1660	SEEDING & MULCHING	3 ACR	2,500.00	7,500.00
0153	6087000000-E	1660	MOWING	1.5 ACR	300.00	450.00
0154	6090000000-E	1661	SEED FOR REPAIR SEEDING	50 LB	9.00	450.00
0155	6093000000-E	1661	FERTILIZER FOR REPAIR SEEDING	0.25 TON	3,400.00	850.00
0156	6096000000-E	1662	SEED FOR SUPPLEMENTAL SEEDING	100 LB	5.75	575.00
0157	6108000000-E	1665	FERTILIZER TOPDRESSING	3 TON	1,930.00	5,790.00
0158	6114500000-N	1667	SPECIALIZED HAND MOWING	15 MHR	50.00	750.00
0159	6117000000-N	SP	RESPONSE FOR EROSION CONTROL	15 EA	400.00	6,000.00
0160	6132000000-N	SP	GENERIC EROSION CONTROL ITEM CONCRETE WASHOUT STRUCTURE	3 EA	750.00	2,250.00
0161	7048500000-E	1705	PEDESTRIAN SIGNAL HEAD (16", 1 SECTION W/COUNTDOWN)	6 EA	815.00	4,890.00
0162	7060000000-E	1705	SIGNAL CABLE	7,950 LF	1.40	11,130.00
0163	7120000000-E	1705	VEHICLE SIGNAL HEAD (12", 3 SECTION)	40 EA	900.00	36,000.00
0164	7132000000-E	1705	VEHICLE SIGNAL HEAD (12", 4 SECTION)	3 EA	1,070.00	3,210.00
0165	7144000000-E	1705	VEHICLE SIGNAL HEAD (12", 5 SECTION)	3 EA	1,420.00	4,260.00

Line #	ItemNumber	Sec #	Description	Quantity Unit	Unit Bid Price	Amount Bid
0166	7264000000-E	1710	MESSENGER CABLE (3/8")	1,030 LF	10.25	10,557.50
0167	7279000000-E	1715	TRACER WIRE	2,600 LF	0.65	1,690.00
0168	7300000000-E	1715	UNPAVED TRENCHING (**********) (1, 2")	1,275 LF	7.25	9,243.75
0169	7300000000-E	1715	UNPAVED TRENCHING (**********) (2, 2")	105 LF	9.40	987.00
0170	7300000000-E	1715	UNPAVED TRENCHING (**********) (3, 2")	50 LF	11.00	550.00
0171	7300000000-E	1715	UNPAVED TRENCHING (**********) (4, 2")	125 LF	13.00	1,625.00
0172	7301000000-E	1715	DIRECTIONAL DRILL (**********) (1, 2")	2,600 LF	14.20	36,920.00
0173	7301000000-E	1715	DIRECTIONAL DRILL (**********) (2, 2")	160 LF	20.25	3,240.00
0174	7301000000-E	1715	DIRECTIONAL DRILL (**********) (3, 2")	150 LF	30.00	4,500.00
0175	7301000000-E	1715	DIRECTIONAL DRILL (**********) (4, 2")	150 LF	38.00	5,700.00
0176	7324000000-N	1716	JUNCTION BOX (STANDARD SIZE)	13 EA	400.00	5,200.00
0177	7348000000-N	1716	JUNCTION BOX (OVER-SIZED, HEA-VY DUTY)	15 EA	725.00	10,875.00
0178	7360000000-N	1720	WOOD POLE	3 EA	1,540.00	4,620.00
0179	7372000000-N	1721	GUY ASSEMBLY	12 EA	685.00	8,220.00
0180	7420000000-E	1722	2" RISER WITH WEATHERHEAD	5 EA	630.00	3,150.00
0181	7444000000-E	1725	INDUCTIVE LOOP SAWCUT	8,550 LF	7.40	63,270.00
0182	7456000000-E	1726	LEAD-IN CABLE (**********) (14-2)	15,000 LF	1.15	17,250.00
0183	7481000000-N	SP	SITE SURVEY	2 EA	1,400.00	2,800.00

Line #	ItemNumber	Sec #	Description	Quantity Unit	Unit Bid Price	Amount Bid
0184	7481240000-N	SP	CAMERA WITHOUT INTERNAL LOOP EMULATOR PROCESSING UNIT	5 EA	3,600.00	18,000.00
0185	7481260000-N	SP	EXTERNAL LOOP EMULATOR PROCESSING UNIT	2 EA	4,260.00	8,520.00
0186	7516000000-E	1730	COMMUNICATIONS CABLE (**FIBER) (12)	400 LF	2.30	920.00
0187	7516000000-E	1730	COMMUNICATIONS CABLE (**FIBER) (24)	3,100 LF	2.35	7,285.00
0188	7540000000-N	1731	SPLICE ENCLOSURE	3 EA	1,150.00	3,450.00
0189	7541000000-N	1731	MODIFY SPLICE ENCLOSURE	2 EA	880.00	1,760.00
0190	7552000000-N	1731	INTERCONNECT CENTER	1 EA	1,135.00	1,135.00
0191	7566000000-N	1733	DELINEATOR MARKER	11 EA	90.00	990.00
0192	7575160000-E	1734	REMOVE EXISTING COMMUNICATIONS CABLE	300 LF	1.15	345.00
0193	7588000000-N	SP	METAL POLE WITH SINGLE MAST ARM	1 EA	23,000.00	23,000.00
0194	7613000000-N	SP	SOIL TEST	1 EA	2,615.00	2,615.00
0195	7614100000-E	SP	DRILLED PIER FOUNDATION	10 CY	855.00	8,550.00
0196	7631000000-N	SP	MAST ARM WITH METAL POLE DESIGN	1 EA	625.00	625.00
0197	7636000000-N	1745	SIGN FOR SIGNALS	8 EA	360.00	2,880.00
0198	7642200000-N	1743	TYPE II PEDESTAL WITH FOUNDATION	10 EA	1,700.00	17,000.00
0199	7684000000-N	1750	SIGNAL CABINET FOUNDATION	1 EA	1,050.00	1,050.00
0200	7686000000-N	1752	CONDUIT ENTRANCE INTO EXISTING FOUNDATION	3 EA	510.00	1,530.00
0201	7756000000-N	1751	CONTROLLER WITH CABINET (TYPE 2070L, BASE MOUNTED)	1 EA	16,000.00	16,000.00

Contract Item Sheets For C203994

Line #	ItemNumber	Sec #	Description	Quantity Unit	Unit Bid Price	Amount Bid
0202	7780000000-N	1751	DETECTOR CARD (TYPE 2070L)	11 EA	130.00	1,430.00
0203	7901000000-N	1753	CABINET BASE EXTENDER	1 EA	475.00	475.00
0204	7980000000-N	SP	GENERIC SIGNAL ITEM FURNISH & INSTALL NEW 2070E CONTROLLER IN EXISTING CABINET	2 EA	2,840.00	5,680.00
0205	7990000000-E	SP	GENERIC SIGNAL ITEM BACK PULL FIBER OPTIC CABLE	325 LF	1.70	552.50

Contract Item Sheets For C203994

Line #	ItemNumber	Sec #	Description	Quantity Unit	Unit Bid Price	Amount Bid
0206	8801000000-E	SP	MSE RETAINING WALL NO **** (1)	4,055 SF	56.00	227,080.00
0207	8801000000-E	SP	MSE RETAINING WALL NO **** (2)	5,195 SF	57.00	296,115.00
0208	8801000000-E	SP	MSE RETAINING WALL NO **** (3)	8,220 SF	55.50	456,210.00
0209	8801000000-E	SP	MSE RETAINING WALL NO **** (4)	4,425 SF	70.00	309,750.00

Contract Item Sheets For C203994

Line #	ItemNumber	Sec #	Description	Quantity Unit	Unit Bid Price	Amount Bid
0210	8084000000-N	410	FOUNDATION EXCAVATION FOR END BENT ** AT STATION ********** (1, 15+75.56 -Y1-)	Lump Sum LS	30,000.00	30,000.00
0211	8084000000-N	410	FOUNDATION EXCAVATION FOR END BENT ** AT STATION ********** (2, 15+75.56 -Y1-)	Lump Sum LS	37,000.00	37,000.00
0212	8154000000-E	420	REINFORCED CONCRETE DECK SLAB (SAND LIGHTWEIGHT CONC)	11,151 SF	29.00	323,379.00
0213	8161000000-E	420	GROOVING BRIDGE FLOORS	12,228 SF	0.40	4,891.20
0214	8182000000-E	420	CLASS A CONCRETE (BRIDGE)	1,083.8 CY	495.00	536,481.00
0215	8210000000-N	422	BRIDGE APPROACH SLABS, STATION ********** (15+75.56 -Y1-)	Lump Sum LS	70,930.00	70,930.00
0216	8217000000-E	425	REINFORCING STEEL (BRIDGE)	144,474 LB	0.75	108,355.50
0217	8280000000-E	440	APPROX ..... LBS STRUCTURAL STEEL	1,073,598 LS	1,812,600.00	1,812,600.00
0218	8503000000-E	460	CONCRETE BARRIER RAIL	405 LF	78.00	31,590.00
0219	8654000000-N	SP	DISC BEARINGS	Lump Sum LS	50,000.00	50,000.00
0220	8706000000-N	SP	EXPANSION JOINT SEALS	Lump Sum LS	69,000.00	69,000.00
0221	8727000000-N	SP	ELECTRICAL CONDUIT SYSTEM FOR SIGNALS AT STA********** (15+75.56 -Y1-)	Lump Sum LS	21,915.00	21,915.00
0222	8867000000-E	SP	GENERIC STRUCTURE ITEM CONCRETE BARRIER RAIL WITH MOMENT SLAB	1,588.2 LF	235.00	373,227.00

TOTAL AMOUNT OF BID FOR ENTIRE PROJECT **$10,216,654.70**

Contract No. C203994

County Cabarrus

Rev. 1-16-18

EXECUTION OF CONTRACT
NON-COLLUSION, DEBARMENT AND GIFT BAN CERTIFICATION

CORPORATION

The Contractor being duly sworn, solemnly swears (or affirms) that neither he, nor any official, agent or employee has entered into any agreement, participated in any collusion, or otherwise taken any action which is in restraint of free competitive bidding in connection with this Contract, that the Contractor has not been convicted of violating *N.C.G.S. § 133-24* within the last three years, and that the Contractor intends to do the work with its own bonafide employees or subcontractors and did not bid for the benefit of another contractor.

By submitting this Execution of Contract, Non-Collusion and Debarment Certification, the Contractor is certifying his status under penalty of perjury under the laws of the United States in accordance with the Debarment Certification attached, provided that the Debarment Certification also includes any required statements concerning exceptions that are applicable.

N.C.G.S. § 133-32 and Executive Order 24 prohibit the offer to, or acceptance by, any State Employee of any gift from anyone with a contract with the State, or from any person seeking to do business with the State. By execution of any response in this procurement, you attest, for your entire organization and its employees or agents, that you are not aware that any such gift has been offered, accepted, or promised by any employees of your organization.

SIGNATURE OF CONTRACTOR

Blythe Development Company

Full name of Corporation

1415 E. Westinghouse Blvd., Charlotte, NC 28273

Address as Prequalified

Attest _____ By _____

~~Secretary~~/Assistant Secretary
Select appropriate title

President/~~Vice President/Assistant Vice President~~
Select appropriate title

Luther J. Blythe Jr.

Print or type Signer's name

L. Jack Blythe

Print or type Signer's name

CORPORATE SEAL



Contract No. C203994
County Cabarrus

Rev 1-16-18

DEBARMENT CERTIFICATION

Conditions for certification:

1. The prequalified bidder shall provide immediate written notice to the Department if at any time the bidder learns that his certification was erroneous when he submitted his debarment certification or explanation filed with the Department, or has become erroneous because of changed circumstances.

2. The terms *covered transaction, debarred, suspended, ineligible, lower tier covered transaction, participant, person, primary covered transaction, principal, proposal,* and *voluntarily excluded,* as used in this provision, have the meanings set out in the Definitions and Coverage sections of the rules implementing Executive Order 12549. A copy of the Federal Rules requiring this certification and detailing the definitions and coverages may be obtained from the Contract Officer of the Department.

3. The prequalified bidder agrees by submitting this form, that he will not knowingly enter into any lower tier covered transaction with a person who is debarred, suspended, declared ineligible, or voluntarily excluded from participation in NCDOT contracts, unless authorized by the Department.

4. For Federal Aid projects, the prequalified bidder further agrees that by submitting this form he will include the Federal-Aid Provision titled *Required Contract Provisions Federal-Aid Construction Contract (Form FHWA PR* 1273) provided by the Department, without subsequent modification, in all lower tier covered transactions.

5. The prequalified bidder may rely upon a certification of a participant in a lower tier covered transaction that he is not debarred, suspended, ineligible, or voluntarily excluded from the covered transaction, unless he knows that the certification is erroneous. The bidder may decide the method and frequency by which he will determine the eligibility of his subcontractors.

6. Nothing contained in the foregoing shall be construed to require establishment of a system of records in order to render in good faith the certification required by this provision. The knowledge and information of a participant is not required to exceed that which is normally possessed by a prudent person in the ordinary course of business dealings.

7. Except as authorized in paragraph 6 herein, the Department may terminate any contract if the bidder knowingly enters into a lower tier covered transaction with a person who is suspended, debarred, ineligible, or voluntarily excluded from participation in this transaction, in addition to other remedies available by the Federal Government.

Contract No. C203994
County Cabarrus

Rev. 1-16-18

DEBARMENT CERTIFICATION

The prequalified bidder certifies to the best of his knowledge and belief, that he and his principals:

a. Are not presently debarred, suspended, proposed for debarment, declared ineligible, or voluntarily excluded from covered transactions by any Federal department or agency;

b. Have not within a three-year period preceding this proposal been convicted of or had a civil judgment rendered against them for commission of fraud or a criminal offense in connection with obtaining, attempting to obtain, or performing a public (Federal, State or local) transaction or contract under a public transaction; violation of Federal or State antitrust statutes or commission of embezzlement, theft, forgery, bribery, falsification or destruction of records; making false statements; or receiving stolen property;

c. Are not presently indicted for or otherwise criminally or civilly charged by a governmental entity (Federal, State or local) with commission of any of the offenses enumerated in paragraph b. of this certification; and

d. Have not within a three-year period preceding this proposal had one or more public transactions (Federal, State or local) terminated for cause or default.

e. Will submit a revised Debarment Certification immediately if his status changes and will show in his bid proposal an explanation for the change in status.

If the prequalified bidder cannot certify that he is not debarred, he shall provide an explanation with this submittal. An explanation will not necessarily result in denial of participation in a contract.

Failure to submit a non-collusion affidavit and debarment certification will result in the prequalified bidder's bid being considered non-responsive.

☐ Check here if an explanation is attached to this certification.

Contract No. **C203994**

County (ies): **Cabarrus**

ACCEPTED BY THE
DEPARTMENT OF TRANSPORTATION

DocuSigned by:
Ronald E. Davenport, Jr.
F81B6038A47A442...
Contract Officer

1/5/2018
Date

Execution of Contract and Bonds
Approved as to Form:

DocuSigned by:
Thomas H. Hoefler
C0EA8F599F64429...
Attorney General

1/5/2018
Date

Bond No. 018042917

Contract No. C203994
County Cabarrus

Rev 5-17-11

CONTRACT PAYMENT BOND

Date of Payment Bond Execution	January 2, 2018
Name of Principal Contractor	Blythe Development Company
Name of Surety:	Liberty Mutual Insurance Company
Name of Contracting Body:	**North Carolina Department of Transportation** **Raleigh, North Carolina**
Amount of Bond:	($10,216,654.70) Ten Million Two Hundred Sixteen Thousand Six Hundred Fifty Four Dollars and 70/100
Contract ID No.:	C203994
County Name:	Cabarrus

KNOW ALL MEN BY THESE PRESENTS, That we, the PRINCIPAL CONTRACTOR (hereafter, PRINCIPAL) and SURETY above named, are held and firmly bound unto the above named Contracting Body, hereinafter called the Contracting Body, in the penal sum of the amount stated above for the payment of which sum well and truly to be made, we bind ourselves, our heirs, executors, administrators, and successors, jointly and severally, firmly by these presents.

THE CONDITION OF THIS OBLIGATION IS SUCH, that whereas the principal entered into a certain contract with the Contracting Body, numbered as shown above and hereto attached:

NOW THEREFORE, if the principal shall promptly make payment to all persons supplying labor and material in the prosecution of the work provided for in said contract, and any and all duly authorized modifications of said contract that may hereafter be made, notice of which modifications to the surety being hereby waived, then this obligation to be void; otherwise to remain in full force and virtue.

IN WITNESS WHEREOF, the above-bound parties have executed this instrument under their several seals on the date indicated above, the name and corporate seal of each corporate party being hereto affixed and these presents duly signed by its undersigned representative, pursuant to authority of its governing body.

Contract No. C203994

County Cabarrus

Rev 5-17-11

CONTRACT PAYMENT BOND

Affix Seal of Surety Company

Liberty Mutual Insurance Company
Print or type Surety Company Name

By Angela D. Ramsey
Print, stamp or type name of Attorney-in-Fact

Angela D Ramsey
Signature of Attorney-in-Fact

Donna K Ashley
Signature of Witness

Donna K. Ashley
Print or type Signer's name

6400 Fairview Road

Charlotte, NC 28210
Address of Attorney-in-Fact

Contract No. C203994 Rev 5-17-11

County Cabarrus

CONTRACT PAYMENT BOND

CORPORATION

SIGNATURE OF CONTRACTOR (Principal)

Blythe Development Company

Full name of Corporation

1415 East Westinghouse Boulevard, Charlotte, NC 28273

Address as prequalified

By L Jack Blythe

Signature of President, ~~Vice President, Assistant Vice President~~

Select appropriate title

L. JACK BLYTHE

Print or type Signer's name

Affix Corporate Seal

Blythe Development Co. North Carolina 1960 CORPORATE SEAL

Attest

Signature of ~~Secretary~~, Assistant Secretary

Select appropriate title

Luther J Blythe Jr.

Print or type Signer's name

Bond No. 018042917

Contract No. C203994 Rev 5-17-11

County Cabarrus

CONTRACT PERFORMANCE BOND

Date of Performance Bond Execution: January 2, 2018

Name of Principal Contractor: Blythe Development Company

Name of Surety: Liberty Mutual Insurance Company

Name of Contracting Body: **North Carolina Department of Transportation**

Raleigh, North Carolina

Amount of Bond: ($10,216,654.70) Ten Million Two Hundred Sixteen Thousand Six Hundred Fifty Four Dollars and 70/100

Contract ID No.: C203994

County Name: Cabarrus

KNOW ALL MEN BY THESE PRESENTS, That we, the PRINCIPAL CONTRACTOR (hereafter, PRINCIPAL) and SURETY above named, are held and firmly bound unto the above named Contracting Body, hereinafter called the Contracting Body, in the penal sum of the amount stated above for the payment of which sum well and truly to be made, we bind ourselves, our heirs, executors, administrators, and successors, jointly and severally, firmly by these presents.

THE CONDITION OF THIS OBLIGATION IS SUCH, that whereas the principal entered into a certain contract with the Contracting Body, numbered as shown above and hereto attached:

NOW THEREFORE, if the principal shall well and truly perform and fulfill all the undertakings, covenants, terms, conditions, and agreements of said contract during the original term of said contract and any extensions thereof that may be granted by the Contracting Body, with or without notice to the Surety, and during the life of any guaranty required under the contract, and shall also well and truly perform and fulfill all the undertakings, covenants, terms, conditions, and agreements of any and all duly authorized modifications of said contract that may hereafter be made, notice of which modifications to the surety being hereby waived, then this obligation to be void; otherwise to remain in full force and virtue.

IN WITNESS WHEREOF, the above-bound parties have executed this instrument under their several seals on the date indicated above, the name and corporate seal of each corporate party being hereto affixed and these presents duly signed by its undersigned representative, pursuant to authority of its governing body.

Contract No. C203994
County Cabarrus

Rev 5-17-11

CONTRACT PERFORMANCE BOND

Affix Seal of Surety Company

Liberty Mutual Insurance Company
Print or type Surety Company Name

By Angela D. Ramsey
Print, stamp or type name of Attorney-in-Fact

Angela D Ramsey
Signature of Attorney-in-Fact

Donna K. Ashley
Signature of Witness

Donna K. Ashley
Print or type Signer's name

6400 Fairview Road

Charlotte, NC 28210
Address of Attorney-in-Fact

Contract No. C203994
County Cabarrus

Rev 5-17-11

CONTRACT PERFORMANCE BOND

CORPORATION

SIGNATURE OF CONTRACTOR (Principal)

Blythe Development Company
Full name of Corporation

1415 East Westinghouse Boulevard, Charlotte, NC 28273
Address as prequalified

By _____
Signature of President, ~~Vice President, Assistant Vice President~~
Select appropriate title

L. Jack Blythe
Print or type Signer's name

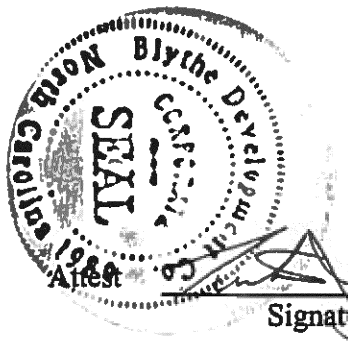

Affix Corporate Seal

Attest _____
Signature of ~~Secretary~~, Assistant Secretary
Select appropriate title

Luther J Blythe Jr.
Print or type Signer's name

This Power of Attorney limits the acts of those named herein, and they have no authority to bind the Company except in the manner and to the extent herein stated. Not valid for mortgage, note, loan, letter of credit, bank deposit, currency rate, interest rate or residual value guarantees. To confirm the validity of this Power of Attorney call 610-832-8240 between 9:00 am and 4:30 pm EST on any business day.

Liberty Mutual Insurance Company
The Ohio Casualty Insurance Company
West American Insurance Company

POWER OF ATTORNEY

KNOWN ALL PERSONS BY THESE PRESENTS: That The Ohio Casualty Insurance Company is a corporation duly organized under the laws of the State of New Hampshire, that Liberty Mutual Insurance Company is a corporation duly organized under the laws of the State of Massachusetts, and West American Insurance Company is a corporation duly organized under the laws of the State of Indiana (herein collectively called the "Companies"), pursuant to and by authority herein set forth, does hereby name, constitute and appoint, Angela D. Ramsey of the city of Charlotte, state of NC its true and lawful attorney-in-fact, with full power and authority hereby conferred to sign, execute and acknowledge the following surety bond:

Principal Name: Blythe Development Company

Obligee Name: NC DOT

Surety Bond Number: 018042917 **Bond Amount:** See Bond Form

IN WITNESS WHEREOF, this Power of Attorney has been subscribed by an authorized officer or official of the Companies and the corporate seals of the Companies have been affixed thereto this 6th day of March, 2017.

The Ohio Casualty Insurance Company
Liberty Mutual Insurance Company
West American Insurance Company

By: _____
David M. Carey, Assistant Secretary

STATE OF PENNSYLVANIA ss
COUNTY OF MONTGOMERY

On this 6th day of March, 2017, before me personally appeared David M. Carey, who acknowledged himself to be the Assistant Secretary of Liberty Mutual Insurance Company, The Ohio Casualty Company, and West American Insurance Company, and that he, as such, being authorized so to do, execute the foregoing instrument for the purposes therein contained by signing on behalf of the corporations by himself as a duly authorized officer.

IN WITNESS WHEREOF, I have hereunto subscribed my name and affixed my notarial seal at King of Prussia, Pennsylvania, on the day and year first above written.

COMMONWEALTH OF PENNSYLVANIA
Notarial Seal
Teresa Pastella, Notary Public
Upper Merion Twp., Montgomery County
My Commission Expires March 28, 2021
Member, Pennsylvania Association of Notaries

By: _____
Teresa Pastella, Notary Public

This Power of Attorney is made and executed pursuant to and by authority of the following By-laws and Authorizations of The Ohio Casualty Insurance Company, Liberty Mutual Insurance Company, and West American Insurance Company which resolutions are now in full force and effect reading as follows:

ARTICLE IV – OFFICERS – Section 12. Power of Attorney. Any officer or other official of the Corporation authorized for that purpose in writing by the Chairman or the President, and subject to such limitation as the Chairman or the President may prescribe, shall appoint such attorneys-in-fact, as may be necessary to act in behalf of the Corporation to make, execute, seal, acknowledge and deliver as surety any and all undertakings, bonds, recognizances and other surety obligations. Such attorneys-in-fact, subject to the limitations set forth in their respective powers of attorney, shall have full power to bind the Corporation by their signature and execution of any such instruments and to attach thereto the seal of the Corporation. When so executed, such instruments shall be as binding as if signed by the President and attested to by the Secretary. Any power or authority granted to any representative or attorney-in-fact under the provisions of this article may be revoked at any time by the Board, the Chairman, the President or by the officer or officers granting such power or authority.

ARTICLE XIII – Execution of Contracts – SECTION 5. Surety Bonds and Undertakings. Any officer of the Company authorized for that purpose in writing by the chairman or the president, and subject to such limitations as the chairman or the president may prescribe, shall appoint such attorneys-in-fact, as may be necessary to act in behalf of the Company to make, execute, seal, acknowledge and deliver as surety any and all undertakings, bonds, recognizances and other surety obligations. Such attorneys-in-fact subject to the limitations set forth in their respective powers of attorney, shall have full power to bind the Company by their signature and execution of any such instruments and to attach thereto the seal of the Company. When so executed such instruments shall be as binding as if signed by the president and attested by the secretary.

Certificate of Designation – The President of the Company, acting pursuant to the Bylaws of the Company, authorizes David M. Carey, Assistant Secretary to appoint such attorneys-in-fact as may be necessary to act on behalf of the Company to make, execute, seal, acknowledge and deliver as surety any and all undertakings, bonds, recognizances and other surety obligations.

Authorization – By unanimous consent of the Company's Board of Directors, the Company consents that facsimile or mechanically reproduced signature of any assistant secretary of the Company, wherever appearing upon a certified copy of any power of attorney issued by the Company in connection with surety bonds, shall be valid and binding upon the Company with the same force and effect as though manually affixed.

I, Renee C. Llewellyn, the undersigned, Assistant Secretary, The Ohio Casualty Insurance Company, Liberty Mutual Insurance Company, and West American Insurance Company do hereby certify that the original power of attorney of which the foregoing is a full, true and correct copy of the Power of Attorney executed by said Companies, is in full force and effect and has not been revoked.

IN TESTIMONY WHEREOF, I have hereunto set my hand and affixed the seals of said Companies this 2nd day of January, 2018.

By: _____
Renee C. Llewellyn, Assistant Secretary