09/08/99

TIP PROJECT:17BP.1.R.34 & 17BP.1.R.35

CONTRACT:

See Sheet 1-A For Index of Sheets

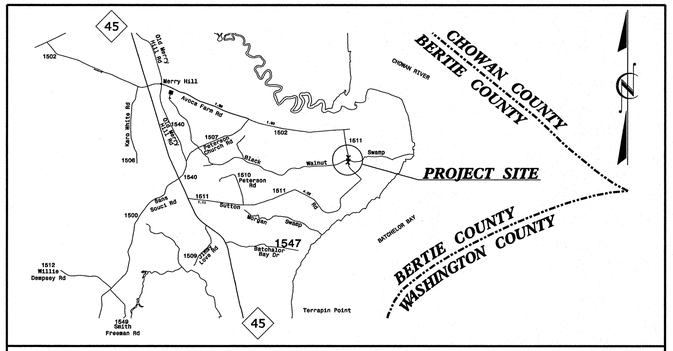


VICINITY MAP

# STATE OF NORTH CAROLINA
## DIVISION OF HIGHWAYS

# BERTIE COUNTY

**LOCATION: BRIDGE NO. 54 & 55 OVER BLACK WALNUT SWAMP ON SR 1511 (SUTTON RD.)**

**TYPE OF WORK: GRADING, DRAINAGE, PAVING & STRUCTURES**

| STATE | STATE PROJECT REFERENCE NO. | SHEET NO. | TOTAL SHEETS |
|---|---|---|---|
| N.C. | 17BP.1.R.34 & 17BP.1.R.35 | 1 | |

| STATE PROJ. NO. | F.A. PROJ. NO. | DESCRIPTION |
|---|---|---|
| 17BP.1.R.34 & 17BP.1.R.35 | | PE, UTIL., R/W & CONST. |

4

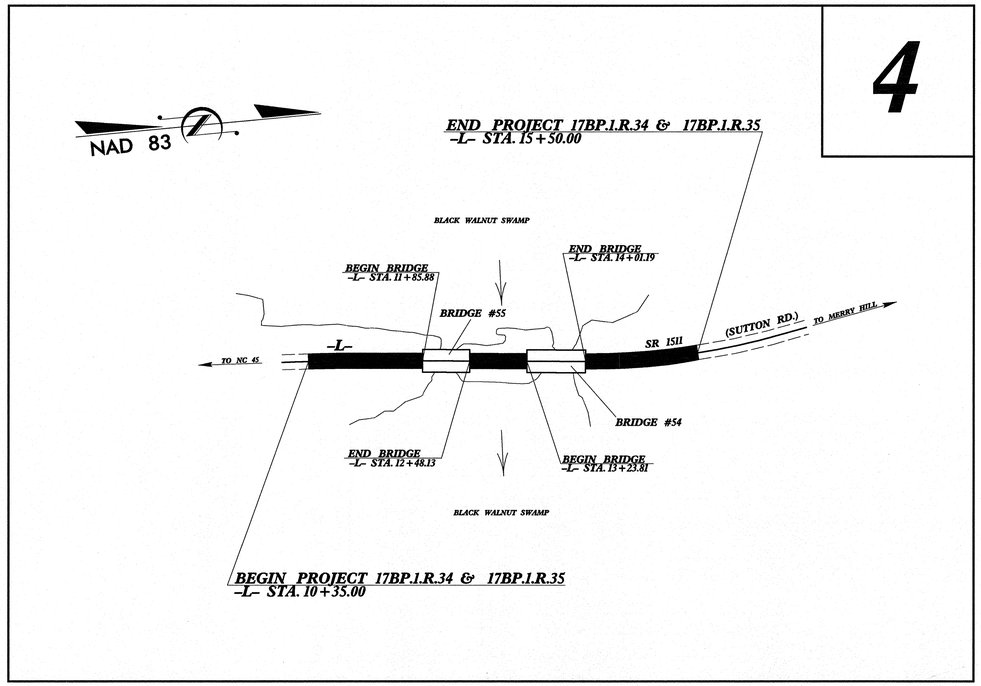


### GRAPHIC SCALES

50 25 0 50 100
PLANS

50 25 0 50 100
PROFILE (HORIZONTAL)

10 5 0 10 20
PROFILE (VERTICAL)

### DESIGN DATA

ADT 2010 = 200
ADT 2032 = 385
DHV = 10 %
D = 50 %
T = 8 % *
V = 50 MPH
* TTST = 3% DUAL = 5%
FUNC CLASS =
RURAL LOCAL
SUBREGIONAL TIER

### PROJECT LENGTH

LENGTH ROADWAY TIP PROJECT 17BP.1.R.34 & 17BP.1.R.35 = 0.073 MI.
LENGTH STRUCTURES TIP PROJECT 17BP.1.R.34 & 17BP.1.R.35 = 0.026 MI.
TOTAL LENGTH TIP PROJECT 17BP.1.R.34 & 17BP.1.R.35 = 0.099 MI.

WETHERILL ENGINEERING
Prepared for the North Carolina Department of Transportation in the Office of:
559 JONES FRANKLIN ROAD
SUITE 164
Raleigh, N.C. 27606
License No. F-0377
Bus: 919 851 8077
Fax: 919 851 8107

2012 STANDARD SPECIFICATIONS

RIGHT OF WAY DATE:

LETTING DATE:

EDWARD G. WETHERILL, PE

BOB A. MAY, PE
PROJECT DESIGN ENGINEER

HYDRAULICS ENGINEER
NORTH CAROLINA PROFESSIONAL SEAL 023993 ENGINEER MAX S. PRICE
SIGNATURE: PE 7/31/12

ROADWAY DESIGN ENGINEER
NORTH CAROLINA PROFESSIONAL SEAL 21116 ENGINEER BOB A. MAY
SIGNATURE: PE 7/31/12

STATE OF NORTH CAROLINA DEPARTMENT OF TRANSPORTATION

4:14:22 PM
P:\2012\Bertie #54\Roadway\Proj\BR#54&55_Rdy_tsh.dgn
7/30/2012

| PROJECT REFERENCE NO. | SHEET NO. |
|---|---|
| 17BP.J.R.34 & 17BP.J.R.35 | 1-A |

ROADWAY DESIGN ENGINEER

NORTH CAROLINA PROFESSIONAL SEAL 20116 ENGINEER ROB A. MAY

7/31/12

# GENERAL NOTES

GENERAL NOTES: 2012 SPECIFICATIONS

EFFECTIVE: 01-17-12
REVISED: 11/01/11

GRADING AND SURFACING OR RESURFACING AND WIDENING:

THE GRADE LINES SHOWN DENOTE THE FINISHED ELEVATION OF THE PROPOSED SURFACING AT GRADE POINTS SHOWN ON THE TYPICAL SECTIONS. WHERE NO GRADE LINES ARE SHOWN, THE PROFILES SHOWN DENOTE THE TOP ELEVATION OF THE EXISTING PAVEMENT ALONG THE CENTER LINE OF SURVEY ON WHICH THE PROPOSED RESURFACING WILL BE PLACED. GRADE LINES MAY BE ADJUSTED BY THE ENGINEER IN ORDER TO SECURE A PROPER TIE-IN.

CLEARING:

CLEARING ON THIS PROJECT SHALL BE PERFORMED TO THE LIMITS ESTABLISHED BY METHOD II, MODIFIED.

SUPERELEVATION:

ALL CURVES ON THIS PROJECT SHALL BE SUPERELEVATED IN ACCORDANCE WITH STD. NO. 225.04 USING THE RATE OF SUPERELEVATION AND RUNOFF SHOWN ON THE PLANS. SUPERELEVATION IS TO BE REVOLVED ABOUT THE GRADE POINTS SHOWN ON THE TYPICAL SECTIONS.

SHOULDER CONSTRUCTION:

ASPHALT, EARTH, AND CONCRETE SHOULDER CONSTRUCTION ON THE HIGH SIDE OF SUPERELEVATED CURVES SHALL BE IN ACCORDANCE WITH STD. NO. 560.01.

UNDERDRAINS:

UNDERDRAINS SHALL BE CONSTRUCTED IN ACCORDANCE WITH STD. NO. 815.03 AT LOCATIONS DIRECTED BY THE ENGINEER.

GUARDRAIL:

THE GUARDRAIL LOCATIONS SHOWN ON THE PLANS MAY BE ADJUSTED DURING CONSTRUCTION AS DIRECTED BY THE ENGINEER. THE CONTRACTOR SHOULD CONSULT WITH THE ENGINEER PRIOR TO ORDERING GUARDRAIL MATERIAL.

TEMPORARY SHORING:

SHORING REQUIRED FOR THE MAINTENANCE OF TRAFFIC WILL BE PAID FOR AS "EXTRA WORK" IN ACCORDANCE WITH SECTION 104-7.

SUBSURFACE PLANS:

NO SUBSURFACE PLANS ARE AVAILABLE ON THIS PROJECT. THE CONTRACTOR SHOULD MAKE HIS OWN INVESTIGATION AS TO THE SUBSURFACE CONDITIONS.

END BENTS:

THE ENGINEER SHALL CHECK THE STRUCTURE END BENT PLANS, DETAILS, AND CROSS-SECTION PRIOR TO SETTING OF THE SLOPE STAKES FOR THE EMBANKMENT OR EXCAVATION APPROACHING A BRIDGE.

UTILITIES:

UTILITY OWNERS ON THIS PROJECT ARE BERTIE COUNTY WATER DEPARTMENT, CENTURYLINK, AVOCA FARMS, INC., AND ROANOKE ELECTRIC CO-OPERATIVE ANY RELOCATION OF EXISTING UTILITIES WILL BE ACCOMPLISHED BY OTHERS.

RIGHT-OF-WAY MARKERS:

ALL RIGHT-OF-WAY MARKERS ON THIS PROJECT SHALL BE PLACED BY OTHERS.

# LIST OF STANDARDS

2012 ROADWAY ENGLISH STANDARD DRAWINGS

The following Roadway Standards as appear in "Roadway Standard Drawings" Highway Design Branch – N. C. Department of Transportation – Raleigh, N. C., Dated January, 2012 are applicable to this project and by reference hereby are considered a part of these plans:

| STD.NO. | TITLE |
|---|---|
| DIVISION 2 – EARTHWORK | |
| 200.02 | Method of Clearing – Method II, Modified |
| 225.02 | Guide for Grading Subgrade – Secondary and Local |
| 225.04 | Method of Obtaining Superelevation – Two Lane Pavement |
| DIVISION 3 – PIPE CULVERTS | |
| 300.01 | Method of Pipe Installation |
| DIVISION 4 – MAJOR STRUCTURES | |
| 422.11 | Reinforced Bridge Approach Fills – Sub Regional Tier |
| DIVISION 5 – SUBGRADE, BASES AND SHOULDERS | |
| 560.01 | Method of Shoulder Construction – High Side of Superelevated Curve – Method I |
| DIVISION 8 – INCIDENTALS | |
| 815.03 | Pipe Underdrain and Blind Drain |
| 840.00 | Concrete Base Pad for Drainage Structures |
| 840.29 | Frames and Narrow Slot Flat Grates |
| 840.35 | Traffic Bearing Grated Drop Inlet – for Cast Iron Double Frame and Grates |
| 840.46 | Traffic Bearing Precast Drainage Structure |
| 846.01 | Concrete Curb, Gutter and Curb & Gutter |
| 846.04 | Drop Inlet Installation in Shoulder Berm Gutter |
| 862.01 | Guardrail Placement |
| 862.02 | Guardrail Installation |
| 862.03 | Structure Anchor Units |

# INDEX OF SHEETS


| SHEET NUMBER | SHEET |
|---|---|
| 1 | TITLE SHEET |
| 1-A | INDEX OF SHEETS, GENERAL NOTES, AND LIST OF STANDARD DRAWINGS |
| 1-B | CONVENTIONAL SYMBOLS |
| 2 | PAVEMENT SCHEDULE, TYPICAL SECTIONS, AND WEDGING DETAILS |
| 3 | SUMMARY OF DRAINAGE QUANTITIES, SUMMARY OF GUARDRAIL, EARTHWORK SUMMARY, ASPHALT PAVEMENT REMOVAL SUMMARY AND SHOULDER BERM GUTTER SUMMARY |
| 4 | PLAN & PROFILE SHEET |
| TCP-1 | TRAFFIC CONTROL PLANS |
| EC-1 THRU EC-3B | EROSION CONTROL PLANS |
| UO-1 | UTILITIES BY OTHERS PLANS |
| X-1A | CROSS-SECTION SUMMARY SHEET |
| X-1 THRU X-5 | CROSS-SECTIONS |
| S-1 THRU S-13 | STRUCTURE PLANS (BRIDGE #55) |
| S-1 THRU S-16 | STRUCTURE PLANS (BRIDGE #54) |



8/17/99

4:14:35 PM
P:\2012\Bertie #54\Roadway\Proj\BR#54&55_Rdy_tsh.dgn
7/30/2012

04/16/11

| PROJECT REFERENCE NO. | SHEET NO. |
|---|---|
| 17BPJR.34 & 17BPJR.35 | 1-B |

***Note: Not to Scale***

****S.U.E. = Subsurface Utility Engineering***

STATE OF NORTH CAROLINA
DIVISION OF HIGHWAYS

# CONVENTIONAL PLAN SHEET SYMBOLS

## *BOUNDARIES AND PROPERTY:*

- State Line
- County Line
- Township Line
- City Line
- Reservation Line
- Property Line
- Existing Iron Pin — EIP
- Property Corner
- Property Monument — ECM
- Parcel/Sequence Number — 123
- Existing Fence Line
- Proposed Woven Wire Fence
- Proposed Chain Link Fence
- Proposed Barbed Wire Fence
- Existing Wetland Boundary — WLB
- Proposed Wetland Boundary — WLB
- Existing Endangered Animal Boundary — EAB
- Existing Endangered Plant Boundary — EPB
- Known Soil Contamination: Area or Site
- Potential Soil Contamination: Area or Site

## *BUILDINGS AND OTHER CULTURE:*

- Gas Pump Vent or U/G Tank Cap
- Sign — S
- Well — W
- Small Mine
- Foundation
- Area Outline
- Cemetery
- Building
- School
- Church
- Dam

## *HYDROLOGY:*

- Stream or Body of Water
- Hydro, Pool or Reservoir
- Jurisdictional Stream — JS
- Buffer Zone 1 — BZ 1
- Buffer Zone 2 — BZ 2
- Flow Arrow
- Disappearing Stream
- Spring
- Wetland
- Proposed Lateral, Tail, Head Ditch — FLOW
- False Sump

## *RAILROADS:*

- Standard Gauge — CSX TRANSPORTATION
- RR Signal Milepost — MILEPOST 35
- Switch — SWITCH
- RR Abandoned
- RR Dismantled

## *RIGHT OF WAY:*

- Baseline Control Point
- Existing Right of Way Marker
- Existing Right of Way Line
- Proposed Right of Way Line — RW
- Proposed Right of Way Line with Iron Pin and Cap Marker — RW
- Proposed Right of Way Line with Concrete or Granite R/W Marker — RW
- Proposed Control of Access Line with Concrete C/A Marker — CA
- Existing Control of Access — CA
- Proposed Control of Access — CA
- Existing Easement Line — E
- Proposed Temporary Construction Easement — E
- Proposed Temporary Drainage Easement — TDE
- Proposed Permanent Drainage Easement — PDE
- Proposed Permanent Drainage / Utility Easement — DUE
- Proposed Permanent Utility Easement — PUE
- Proposed Temporary Utility Easement — TUE
- Proposed Aerial Utility Easement — AUE
- Proposed Permanent Easement with Iron Pin and Cap Marker

## *ROADS AND RELATED FEATURES:*

- Existing Edge of Pavement
- Existing Curb
- Proposed Slope Stakes Cut — C
- Proposed Slope Stakes Fill — F
- Proposed Curb Ramp — CR
- Existing Metal Guardrail
- Proposed Guardrail
- Existing Cable Guiderail
- Proposed Cable Guiderail
- Equality Symbol
- Pavement Removal

## *VEGETATION:*

- Single Tree
- Single Shrub
- Hedge
- Woods Line
- Orchard
- Vineyard — Vineyard

## *EXISTING STRUCTURES:*

MAJOR:

- Bridge, Tunnel or Box Culvert — CONC
- Bridge Wing Wall, Head Wall and End Wall — CONC WW

MINOR:

- Head and End Wall — CONC HW
- Pipe Culvert
- Footbridge
- Drainage Box: Catch Basin, DI or JB — CB
- Paved Ditch Gutter
- Storm Sewer Manhole — S
- Storm Sewer — S

## *UTILITIES:*

POWER:

- Existing Power Pole
- Proposed Power Pole
- Existing Joint Use Pole
- Proposed Joint Use Pole
- Power Manhole — P
- Power Line Tower
- Power Transformer
- U/G Power Cable Hand Hole
- H-Frame Pole
- Recorded U/G Power Line — P
- Designated U/G Power Line (S.U.E.*) — P

TELEPHONE:

- Existing Telephone Pole
- Proposed Telephone Pole
- Telephone Manhole — T
- Telephone Booth
- Telephone Pedestal — T
- Telephone Cell Tower
- U/G Telephone Cable Hand Hole — HH
- Recorded U/G Telephone Cable — T
- Designated U/G Telephone Cable (S.U.E.*) — T
- Recorded U/G Telephone Conduit — TC
- Designated U/G Telephone Conduit (S.U.E.*) — TC
- Recorded U/G Fiber Optics Cable — T FO
- Designated U/G Fiber Optics Cable (S.U.E.*) — T FO

WATER:

- Water Manhole — W
- Water Meter
- Water Valve
- Water Hydrant
- Recorded U/G Water Line — W
- Designated U/G Water Line (S.U.E.*) — W
- Above Ground Water Line — A/G Water

TV:

- TV Satellite Dish
- TV Pedestal — C
- TV Tower
- U/G TV Cable Hand Hole — HH
- Recorded U/G TV Cable — TV
- Designated U/G TV Cable (S.U.E.*) — TV
- Recorded U/G Fiber Optic Cable — TV FO
- Designated U/G Fiber Optic Cable (S.U.E.*) — TV FO

GAS:

- Gas Valve
- Gas Meter
- Recorded U/G Gas Line — G
- Designated U/G Gas Line (S.U.E.*) — G
- Above Ground Gas Line — A/G Gas

SANITARY SEWER:

- Sanitary Sewer Manhole
- Sanitary Sewer Cleanout
- U/G Sanitary Sewer Line — SS
- Above Ground Sanitary Sewer — A/G Sanitary Sewer
- Recorded SS Forced Main Line — FSS
- Designated SS Forced Main Line (S.U.E.*) — FSS

MISCELLANEOUS:

- Utility Pole
- Utility Pole with Base
- Utility Located Object
- Utility Traffic Signal Box — S
- Utility Unknown U/G Line — ?UTL
- U/G Tank; Water, Gas, Oil
- Underground Storage Tank, Approx. Loc. — UST
- A/G Tank; Water, Gas, Oil
- Geoenvironmental Boring
- U/G Test Hole (S.U.E.*)
- Abandoned According to Utility Records — AATUR
- End of Information — E.O.I.

| PROJECT REFERENCE NO. | SHEET NO. |
|---|---|
| 17BP.1.R.34 & 17BP.1.R.35 | 2 |
| ROADWAY DESIGN ENGINEER | PAVEMENT DESIGN ENGINEER |

NORTH CAROLINA PROFESSIONAL SEAL 21716 ENGINEER BOB A. MAY
7/31/12

WETHERILL ENGINEERING
559 Jones Franklin Rd. Suite 164
Raleigh, N.C. 27606
License No. F-0377
Bus: 919 851 8077
Fax: 919 851 8107
TRANSPORTATION PLANNING/DESIGN - BRIDGE/STRUCTURE DESIGN
CIVIL/SITE DESIGN - GIS/GPS - CONSTRUCTION OBSERVATION

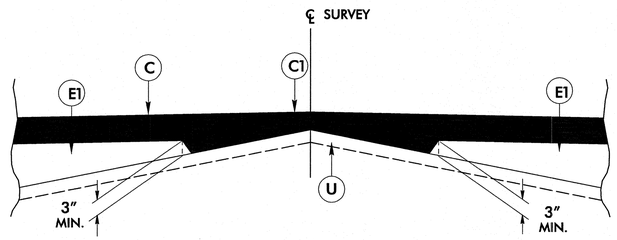


Detail Showing Method of Wedging

## PAVEMENT SCHEDULE

| | |
|---|---|
| C | PROP. APPROX. 2½ " ASPHALT CONCRETE SURFACE COURSE, TYPE SF9.5A, AT AN AVERAGE RATE OF 137.5 LBS. PER SQ. YD. IN EACH OF TWO LAYERS. |
| C1 | PROP. VAR. DEPTH ASPHALT CONCRETE SURFACE COURSE, TYPE SF9.5A, AT AN AVERAGE RATE OF 110 LBS. PER SQ. YD. PER 1" DEPTH. TO BE PLACED IN LAYERS NOT TO EXCEED 1½" IN DEPTH. |
| E | PROP. APPROX. 5½ " ASPHALT CONCRETE BASE COURSE, TYPE B25.0B, AT AN AVERAGE RATE OF 627 LBS. PER SQ. YD. |
| E1 | PROP. VAR. DEPTH ASPHALT CONCRETE BASE COURSE, TYPE B25.0B, AT AN AVERAGE RATE OF 114 LBS. PER SQ. YD. PER 1" DEPTH. TO BE PLACED IN LAYERS NOT LESS THAN 3" IN DEPTH OR GREATER THAN 5½" IN DEPTH. |
| T | EARTH MATERIAL. |
| U | EXISTING PAVEMENT. |
| V | MILLING BITUMINOUS PAVEMENT. 2½" TO 0" DEPTH. |

NOTE: PAVEMENT EDGE SLOPES ARE 1:1 UNLESS SHOWN OTHERWISE.

NOTE: MILL EXISTING PAVEMENT AT THE FOLLOWING LOCATIONS:
-L- STA. 10+35.00 TO -L- STA. 10+51.00
-L- STA. 14+97.09 TO -L- STA. 15+50.00

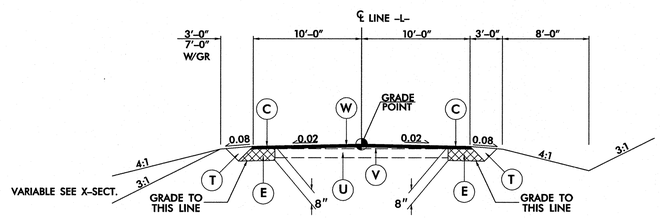


## TYPICAL SECTION NO. 1

USE TYPICAL SECTION NO. 1 AS FOLLOWS:
-L- STA. 10+35.00 TO -L- STA. 11+70.00
-L- STA. 12+60.00 TO -L- STA. 13+10.00
-L- STA. 14+15.00 TO -L- STA. 15+50.00

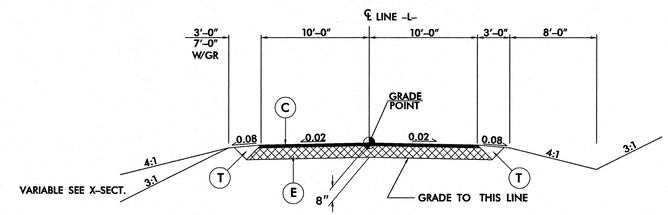


## TYPICAL SECTION NO. 2

USE TYPICAL SECTION NO. 2 AS FOLLOWS:
-L- STA. 11+70.00 TO -L- STA. 11+85.88 (BEGIN BRIDGE)
-L- STA. 12+48.13 (END BRIDGE) TO -L- STA. 12+60.00
-L- STA. 13+10.00 TO -L- STA. 13+23.81 (BEGIN BRIDGE)
-L- STA. 14+01.19 (END BRIDGE) TO -L- STA. 14+15.00

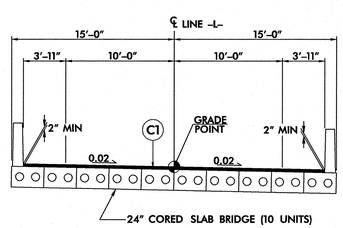


## TYPICAL SECTION NO. 3

USE TYPICAL SECTION NO. 3 AS FOLLOWS:
-L- STA. 11+85.88 (BEGIN BRIDGE #55) TO -L- STA. 12+48.13 (END BRIDGE #55)

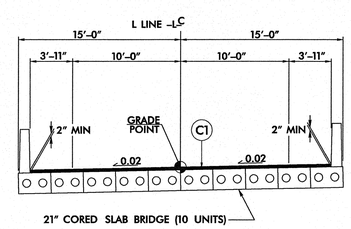


## TYPICAL SECTION NO. 4

USE TYPICAL SECTION NO. 4 AS FOLLOWS:
-L- STA. 13+23.01 (BEGIN BRIDGE #54) TO -L- STA. 14+01.19 (END BRIDGE #54)

6/2/99

4:15:11 PM
P:\2012\Bertie #54\Roadway\Proj\BR#54&55_Rdy_typ.dgn
7/30/2012

12/06/07

COMPUTED BY: bam DATE: 8/15/11
CHECKED BY: DATE:

| PROJECT REFERENCE NO. | SHEET NO. |
|---|---|
| I7BP.I.R.34 & I7BP.I.R.35 | 3 |

STATE OF NORTH CAROLINA
DIVISION OF HIGHWAYS

## SUMMARY OF EARTHWORK

| STATION | STATION | UNCL. EXCAV. | EMBANK. +% | BORROW | WASTE |
|---|---|---|---|---|---|
| -L- 10+35.00 | -L- 11+85.88 | 3 | 103 | 100 | |
| | | | | | |
| SUBTOTALS: | | 3 | 103 | 100 | |
| | | | | | |
| -L- 12+48.13 | -L- 13+23.81 | 0 | 218 | 218 | |
| | | | | | |
| SUBTOTALS: | | 0 | 218 | 218 | |
| | | | | | |
| -L- 14+01.19 | -L- 15+50.00 | 4 | 134 | 130 | |
| | | | | | |
| SUBTOTALS: | | 4 | 134 | 130 | |
| | | | | | |
| PROJECT SUBTOTALS: | | 7 | 455 | 448 | |
| LOSS DUE TO CLEARING & GRUBBING | | | | | |
| PROJECT TOTALS: | | 7 | 455 | 448 | |
| | | | | | |
| 5% TO REPLACE TOPSOIL ON BORROW PIT | | | | 22 | |
| GRAND TOTALS: | | 7 | 455 | 470 | |
| | | | | | |
| SAY: | | 50 | | 500 | |

Note: Approximate quantities only. Unclassified Excavation, Borrow Excavation, Shoulder Borrow, Fine Grading, Clearing and Grubbing, Breaking of Existing Pavement, and Removal of Existing Pavement will be paid for at the contract lump sum price for "Grading."

## PAVEMENT REMOVAL SUMMARY

| SURVEY LINE | STATION | STATION | LOCATION LT/RT/CL | $YD^2$ |
|---|---|---|---|---|
| -L- | 11+70.00 | 12+01.00 | CL | 68.89 |
| -L- | 12+31.00 | 12+60.00 | CL | 64.44 |
| -L- | 13+10.00 | 13+43.00 | CL | 73.33 |
| -L- | 13+84.00 | 14+15.00 | CL | 68.89 |
| | | | | |
| | | | TOTAL: | 275.55 |
| | | | | |
| | | | SAY: | 290.00 |

## SHOULDER BERM GUTTER SUMMARY

| SURVEY LINE | STATION | STATION | LENGTH |
|---|---|---|---|
| | | | |
| -L- RT. | 11+60.88 | 11+74.88 | 14.00 |
| -L- LT. | 12+97.00 | 13+12.81 | 15.81 |
| | | | |
| | | | |
| | | TOTAL: | 29.81 |
| | | | |
| | | SAY: | 35.00 |

## RIGHT OF WAY AREA DATA

| PARCEL NO. | PROPERTY OWNERS NAMES | TOTAL ACREAGE | AREA TAKEN | AREA REMAINING RT. | AREA REMAINING LT. | CONST. EASE. | PERM. DRAIN. EASE. | TEMP. DRAIN. EASE. |
|---|---|---|---|---|---|---|---|---|
| 1 | MARJORIE P. CAPEHART, TRUSTEE | | | | | | NO CLAIM | |
| 2 | AVOCA TECHNICAL OF DELAWARE, INC. | | | | | | NO CLAIM | |
| 3 | AVOCA TECHNICAL OF DELAWARE, INC. | | | | | 359.00 SF | 262.87 SF | |
| 4 | AVOCA TECHNICAL OF DELAWARE, INC. | | | | | 620.51 SF | 518.08 SF | |
| 5 | RIAL CORP | | | | | 226.72 SF | | |
| | | | | | | | | |
| | | | | | | | | |
| | | | | | | | | |
| | | | | | | | | |
| | | | | | | | | |
| | | | | | | | | |

NOTE: INVERT ELEVATIONS INDICATED ARE FOR BID PURPOSES ONLY AND SHALL NOT BE USED FOR PROJECT CONSTRUCTION STAKEOUT. SEE "STANDARD SPECIFICATIONS FOR ROADS AND STRUCTURES, SECTION 300-5".

## SUB-REGIONAL & REGIONAL LIST OF PIPES, ENDWALLS, ETC. (FOR PIPES 48" & UNDER)

| STATION / SIZE / THICKNESS OR GAUGE | LOCATION (LT,RT, OR CL) | STRUCTURE NO. FROM | STRUCTURE NO. TO | TOP ELEVATION | INVERT ELEVATION | INVERT ELEVATION | SLOPE CRITICAL | DRAINAGE PIPE (RCP, CSP, CAAP, HDPE, or PVC) 12" | 15" | 18" | 24" | 30" | 36" | 42" | 48" | DO NOT USE RCP | DO NOT USE CSP | DO NOT USE CAAP | DO NOT USE HDPE |
|---|---|---|---|---|---|---|---|---|---|---|---|---|---|---|---|---|---|---|---|
| -L- 11+65.00 | RT. | 0405 | | 5.71 | | | | | | | | | | | | | | | |
| | | 0405 | 0406 | | 2.96 | 2.87 | | | 28' | | | | | | | | | | |
| -L- 13+00.00 | LT. | 0403 | | 6.52 | | | | | | | | | | | | | | | |
| | | 0403 | 0404 | | 3.77 | 2.70 | | | 16' | | | | | | | | | | |
| | | | | | | | | | | | | | | | | | | | |
| | | | | | | | | | 44' | | | | | | | | | | |
| | | | | | | | | | | | | | | | | | | | |

| STATION | C.S. PIPE 12" (.064) | 15" (.064) | 18" (.064) | 24" (.064) | 36" (.079) | 42" (.109) | 48" (.109) | R.C. PIPE (CLASS III) 15" | 18" | 24" | 30" | 36" | 42" | 48" | R.C. PIPE (CLASS IV) 12" | 15" | 18" | 24" | 30" | 36" | 42" | 48" |
|---|---|---|---|---|---|---|---|---|---|---|---|---|---|---|---|---|---|---|---|---|---|---|
| -L- 11+65.00 | | | | | | | | | | | | | | | | | | | | | | |
| | | | | | | | | | | | | | | | | | | | | | | |
| -L- 13+00.00 | | | | | | | | | | | | | | | | | | | | | | |
| | | | | | | | | | | | | | | | | | | | | | | |
| | | | | | | | | | | | | | | | | | | | | | | |
| | | | | | | | | | | | | | | | | | | | | | | |
| | | | | | | | | | | | | | | | | | | | | | | |

| STATION | **" R. C. PIPE (CLASS V) | **" R. C. PIPE CULVERTS, CONTRACTOR DESIGN PIPE | **" R. C. PIPE CULVERTS, CONTRACTOR DESIGN PIPE | 15" SIDE DRAIN PIPE | 18" SIDE DRAIN PIPE | ENDWALLS STD. 838.01, STD. 838.11 OR STD. 838.80 (UNLESS NOTED OTHERWISE) CU. YDS. R.C.P. | C.S.P. | QUANTITIES FOR DRAINAGE STRUCTURES PER EACH (0' THRU 5.0') | * TOTAL L.F. FOR PAY QUANTITY SHALL BE COL. 'A' + (1.3 X COL.'B') LIN. *FT. A 5.0' THRU 10.0' | B 10.0' AND ABOVE | C.B. STD. 840.01 OR STD. 840.02 | FRAME, GRATES AND HOOD STANDARD 840.03 TYPE OF GRATE E | F | G | | CONCRETE TRANSITIONAL SECTION CATCH BASIN | DROP INLET | G.D.I. TYPE "B" STD. 840.18 OR 840.27 | G.D.I. (N.S.) FRAME WITH TWO GRATES STD. 840.24 | T.B.D.I. STD. 840.35 | G.D.I. (N.S.) FRAME WITH TWO GRATES STD. 840.29 | M.H. FRAME & COVER STD. 840.54 | T.B.J.B. STD. 840.34 | CORR. STEEL ELBOWS NO. & SIZE | CONC. COLLARS CL. "B" C.Y. STD 840.72 | CONC. & BRICK PIPE PLUG, C.Y. STD. 840.71 | PIPE REMOVAL LIN.FT. | REMARKS |
|---|---|---|---|---|---|---|---|---|---|---|---|---|---|---|---|---|---|---|---|---|---|---|---|---|---|---|---|---|---|
| -L- 11+65.00 | | | | | | | | 1 | | | | | | | | | | | | 1 | 1 | | | | | | | |
| | | | | | | | | | | | | | | | | | | | | | | | | | | | | |
| -L- 13+00.00 | | | | | | | | 1 | | | | | | | | | | | | 1 | 1 | | | | | | | |
| | | | | | | | | | | | | | | | | | | | | | | | | | | | | |
| | | | | | | | | | | | | | | | | | | | | | | | | | | | | |
| | | | | | | | | 2 | | | | | | | | | | | | 2 | 2 | | | | | | | |
| | | | | | | | | | | | | | | | | | | | | | | | | | | | | |

ABBREVIATIONS

| | |
|---|---|
| C.B. | CATCH BASIN |
| N.D.I. | NARROW DROP INLET |
| D.I. | DROP INLET |
| G.D.I. | GRATED DROP INLET |
| G.D.I. (N.S.) | GRATED DROP INLET (NARROW SLOT) |
| J.B. | JUNCTION BOX |
| M.H. | MANHOLE |
| T.B.D.I. | TRAFFIC BEARING DROP INLET |
| T.B.J.B. | TRAFFIC BEARING JUNCTION BOX |

"N" = DISTANCE FROM EDGE OF LANE TO FACE OF GUARDRAIL.
TOTAL SHOULDER WIDTH = DISTANCE FROM EDGE OF TRAVEL LANE TO SHOULDER BREAK POINT.
FLARE LENGTH = DISTANCE FROM LAST SECTION OF PARALLEL GUARDRAIL TO END OF GUARDRAIL.
W = TOTAL WIDTH OF FLARE FROM BEGINNING OF TAPER TO END OF GUARDRAIL.
G = GATING IMPACT ATTENUATOR TYPE 350
NG = NON-GATING IMPACT ATTENUATOR TYPE 350

## GUARDRAIL SUMMARY

| SURVEY LINE | BEG. STA. | END STA. | LOCATION | LENGTH STRAIGHT | SHOP CURVED | DOUBLE FACED | WARRANT POINT APPROACH END | TRAILING END | "N" DIST. FROM E.O.L. | TOTAL SHOUL. WIDTH | FLARE LENGTH APPROACH END | TRAILING END | W APPROACH END | TRAILING END | ANCHORS XI MOD | TYPE III | GRAU 350 | M-350 | B-77 | CAT-1 | VI MOD | BIC | AT-1 | IMPACT ATTENUATOR TYPE 350 EA | G | NG | SINGLE FACED GUARDRAIL | REMOVE EXISTING GUARDRAIL | REMOVE AND STOCKPILE EXISTING GUARDRAIL | REMARKS |
|---|---|---|---|---|---|---|---|---|---|---|---|---|---|---|---|---|---|---|---|---|---|---|---|---|---|---|---|---|---|---|
| -L- | 11+10.88 | 11+85.88 | LT. | 75.00' | | | | 11+85.88 | 3'-11" | 7'-0" | | 50'-0" | | 1'-0" | | 1 | 1 | | | | | | | | | | | | | |
| -L- | 11+10.88 | 11+85.88 | RT. | 75.00' | | | 11+85.88 | | 3'-11" | 7'-0" | 50'-0" | | 1'-0" | | | 1 | 1 | | | | | | | | | | | | | |
| -L- | 12+48.13 | 13+23.81 | LT. | 75.68' | | | 12+48.13 | 13+23.81 | 3'-11" | 7'-0" | | | | | | 2 | | | | | | | | | | | | | | |
| -L- | 12+48.13 | 13+23.81 | RT. | 75.68' | | | 13+23.81 | 12+48.13 | 3'-11" | 7'-0" | | | | | | 2 | | | | | | | | | | | | | | |
| -L- | 14+01.19 | 14+76.19 | LT. | 75.00' | | | 14+01.19 | | 3'-11" | 7'-0" | 50'-0" | | 1'-0" | | | 1 | 1 | | | | | | | | | | | | | |
| -L- | 14+01.19 | 14+76.19 | RT. | 75.00' | | | | 14+01.19 | 3'-11" | 7'-0" | | 50'-0" | | 1'-0" | | 1 | 1 | | | | | | | | | | | | | |
| | | | | | | | | | | | | | | | | | | | | | | | | | | | | | | |
| | | | | | | | | | | | | | | | | | | | | | | | | | | | | | | |
| | | | | | | | | | | | | | | | | | | | | | | | | | | | | | | |
| | | PROJECT SUBTOTAL | | 451.36' | | | | | | | | | | | | 8 | 4 | | | | | | | | | | | | | |
| | | LESS ANCHOR DEDUCTIONS | | (-)350.00' | | | | | | | | | | | | GUARDRAIL ANCHOR DEDUCTIONS | | | | | | | | | | | | | | |
| | | PROJECT TOTAL | | 101.36' | | | | | | | | | | | | TYPE III = 8 @ 18.75' = 150' | | | | | | | | | | | | | | |
| | | | | | | | | | | | | | | | | GRAU 350 = 4 @ 50' = 200' | | | | | | | | | | | | | | |
| | | SAY | | 125.00' | | ADDITIONAL GUARDRAIL POSTS = 5 EACH | | | | | | | | | | TOTAL DEDUCTIONS = 350' | | | | | | | | | | | | | | |

4:15:30 PM
P:\2012\Bertie #54\Roadway\Proj\BR#54&55_Rdy_sum.dgn
7/30/2012

8/17/99

REVISIONS

## DATUM DESCRIPTION

THE LOCALIZED COORDINATE SYSTEM DEVELOPED FOR THIS PROJECT IS BASED ON THE STATE PLANE COORDINATES ESTABLISHED BY JOYNER KEENY FOR MONUMENT "BL-2"
WITH NAD 83/CORS 96 STATE PLANE GRID COORDINATES OF
NORTHING: 822753.09(ft) EASTING: 2678711.747(ft)
ELEVATION: 5.14(ft)
THE AVERAGE COMBINED GRID FACTOR USED ON THIS PROJECT (GROUND TO GRID) IS: 0.999960761

LOCALIZED HORIZONTAL GROUND DISTANCE FROM
"BL-2" TO -L- STATION 10+35.00 IS
S 8° 32' 20.4" W 259.72'
ALL LINEAR DIMENSIONS ARE LOCALIZED HORIZONTAL DISTANCES
VERTICAL DATUM USED IS NAVD 88

-L-

PI Sta 10+70.36
Δ = 2° 04' 39.1" (RT)
D = 2° 07' 05.3"
L = 98.08'
T = 49.05'
R = 2,705.00'
SE = 0.03 FT/FT
R0 = SEE PLANS

PI Sta 15+32.97
Δ = 16° 04' 37.9" (LT)
D = 6° 11' 38.9"
L = 259.55'
T = 130.64'
R = 925.00'
SE = 0.04 FT/FT
R0 = SEE PLANS

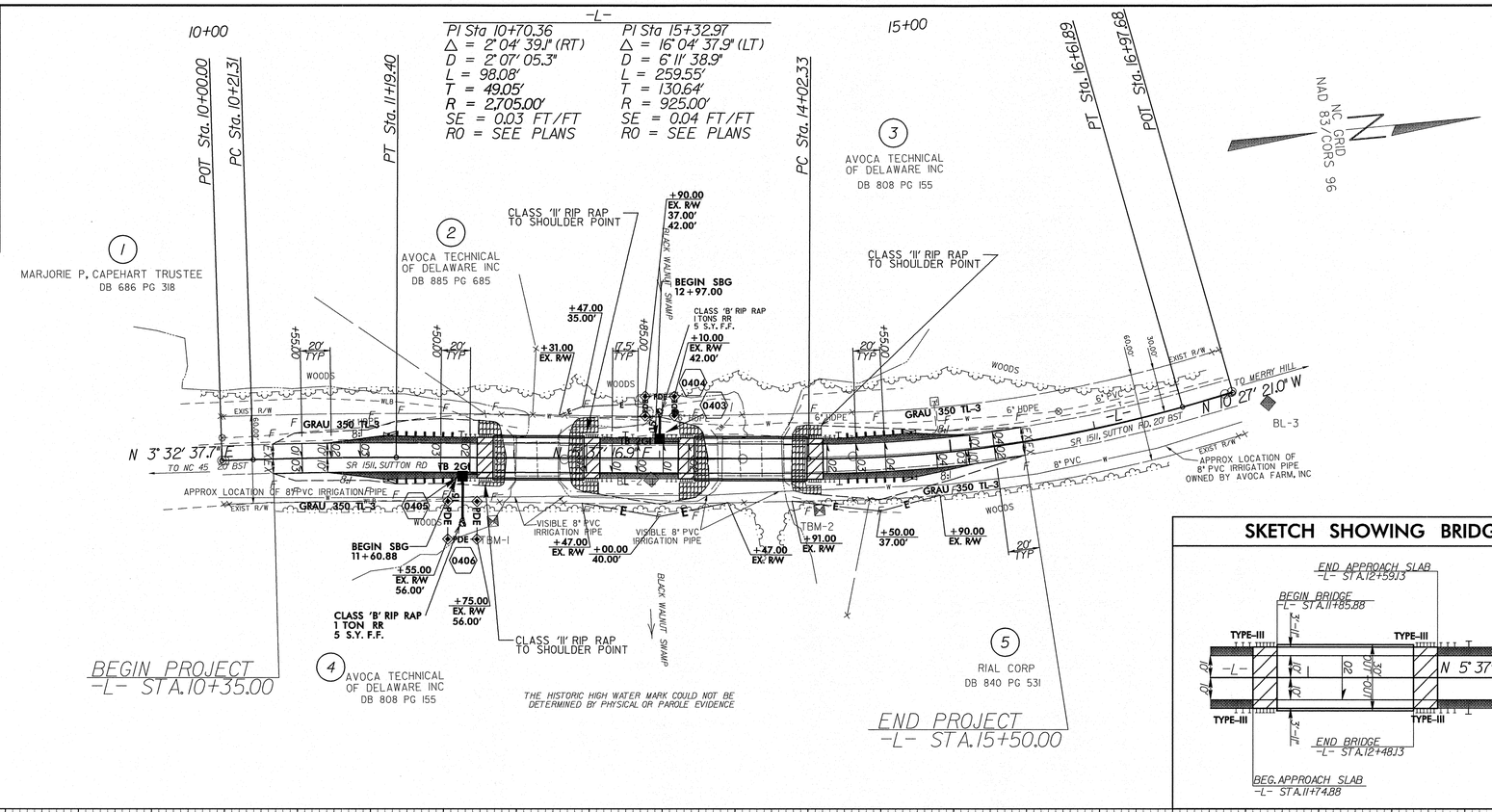


| PROJECT REFERENCE NO. | SHEET NO. |
|---|---|
| 17BP.1.R.34 & 17BP.1.R.35 | 4 |
| R/W SHEET NO. | |

ROADWAY DESIGN ENGINEER
NORTH CAROLINA PROFESSIONAL SEAL 21116 ENGINEER BOB A. MAY
7/31/12

HYDRAULICS ENGINEER
NORTH CAROLINA PROFESSIONAL SEAL 023995 ENGINEER MAX S. PRICE
7/31/12


WETHERILL ENGINEERING
559 Jones Franklin Rd. Suite 164
Raleigh, N.C. 27606
License No. F-0377
Bus: 919 851 8077
Fax: 919 851 8107
TRANSPORTATION PLANNING/DESIGN - BRIDGE/STRUCTURE DESIGN
CIVIL/SITE DESIGN - GIS/GPS - CONSTRUCTION OBSERVATION


## SKETCH SHOWING BRIDGE/PAVEMENT RELATIONSHIP

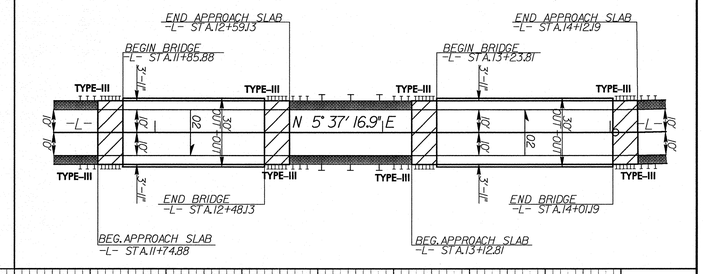


TBM#1 N 822642 E 2678730
BL STA. 8+92.00, 27' RT., EL = 2.80'
BRIDGE NAIL IN BASE OF TWIN 10" MAPLE

TBM#2 N 822666 E 2678744
BL STA. 11+13.00, 35' RT., EL = 3.99'
BRIDGE SPIKE IN BASE OF 10" OAK

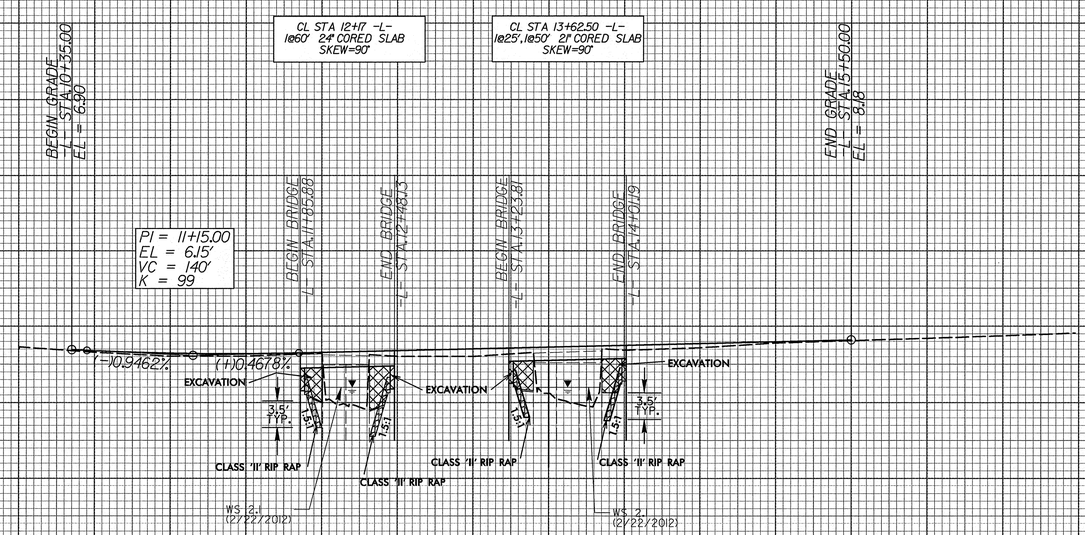


## BRIDGE #55 HYDRAULIC DATA

| | | |
|---|---|---|
| DESIGN DISCHARGE | = 750 | CFS |
| DESIGN FREQUENCY | = 25 | YRS |
| DESIGN HW ELEVATION | = 5.3' | FT |
| BASE DISCHARGE | = 1,100 | CFS |
| BASE FREQUENCY | = 100 | YRS |
| BASE HW ELEVATION | = 6.1' | FT |
| OVERTOPPING DISCHARGE | = 1,500 | CFS |
| OVERTOPPING FREQUENCY | = 500 | YRS |
| OVERTOPPING ELEVATION | = 6.7' | FT |
| DATE OF SURVEY | = 2/22/2012 | |
| W.S. ELEVATION AT DATE OF SURVEY | = 2.1' | FT |

## BRIDGE #54 HYDRAULIC DATA

| | | |
|---|---|---|
| DESIGN DISCHARGE | = 750 | CFS |
| DESIGN FREQUENCY | = 25 | YRS |
| DESIGN HW ELEVATION | = 5.3' | FT |
| BASE DISCHARGE | = 1,100 | CFS |
| BASE FREQUENCY | = 100 | YRS |
| BASE HW ELEVATION | = 6.06' | FT |
| OVERTOPPING DISCHARGE | = 1,500 | CFS |
| OVERTOPPING FREQUENCY | = 500 | YRS |
| OVERTOPPING ELEVATION | = 6.7' | FT |
| DATE OF SURVEY | = 2/22/2012 | |
| W.S. ELEVATION AT DATE OF SURVEY | = 2.1' | FT |


SEE SHEET S-1 THRU S-13 FOR STRUCTURE PLANS (BRIDGE #55)
SEE SHEET S-1 THRU S-16 FOR STRUCTURE PLANS (BRIDGE #54)



4:16:07 PM
P:\20212_Bertie #54\Roadway\Proj\BR#54&55_Rdy_psh.dgn
7/30/2012

| PROJ. REFERENCE NO. | SHEET NO. |
|---|---|
| 17BP.1.R.34 & 17BP.1.R.35 | TCP-1 |

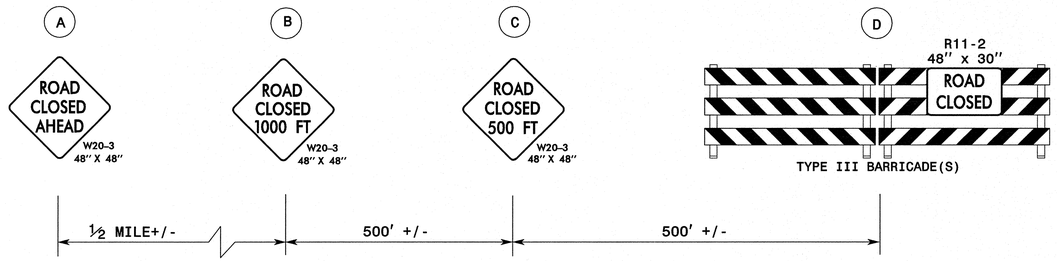


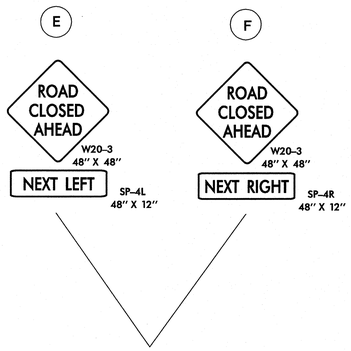


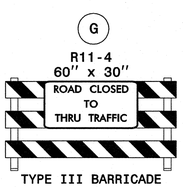


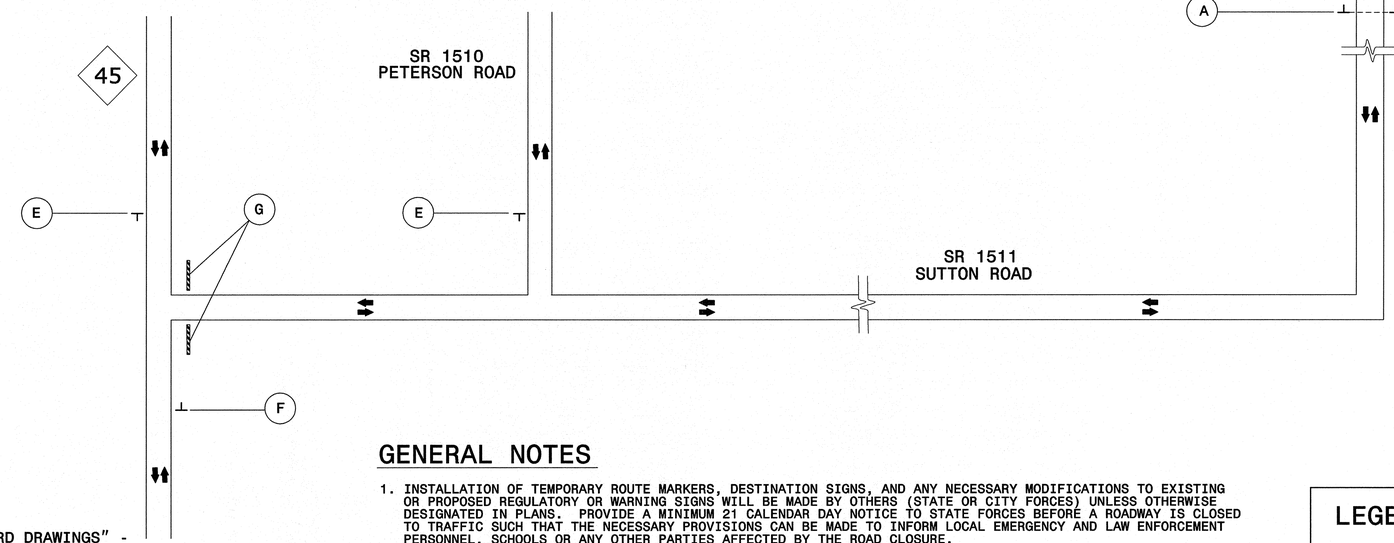


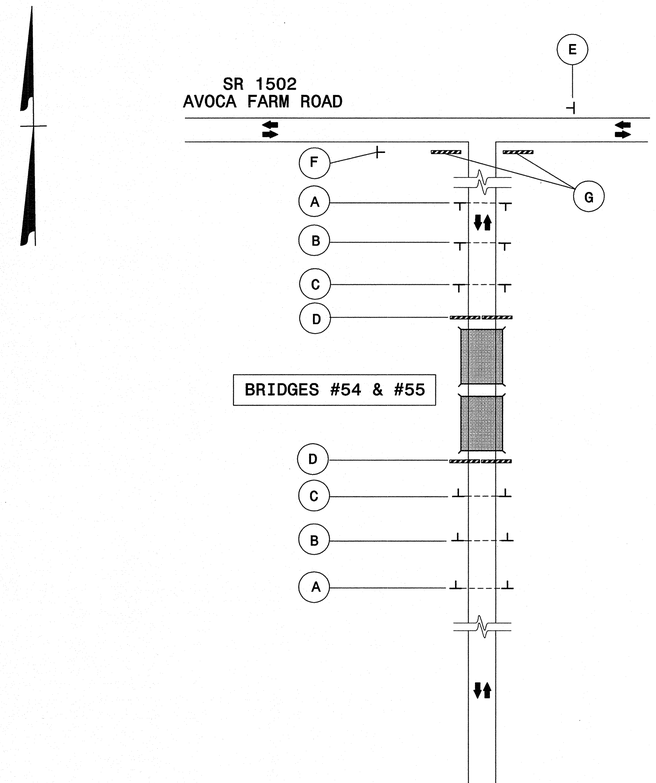


## ROADWAY STANDARD DRAWINGS

THE FOLLOWING ROADWAY STANDARDS AS SHOWN IN "ROADWAY STANDARD DRAWINGS" - PROJECT SERVICES UNIT - N.C. DEPARTMENT OF TRANSPORTATION - RALEIGH, N.C., DATED JANUARY 2012 ARE APPLICABLE TO THIS PROJECT AND BY REFERENCE HEREBY ARE CONSIDERED A PART OF THESE PLANS:

| STD. NO. | TITLE |
|---|---|
| 1101.03 | TEMPORARY ROAD CLOSURES |
| 1101.04 | TEMPORARY SHOULDER CLOSURES |
| 1110.01 | STATIONARY WORK ZONE SIGNS |
| 1110.02 | PORTABLE WORK ZONE SIGNS |
| 1135.01 | CONES |
| 1145.01 | BARRICADES |
| 904.10 | ORIENTATION OF GROUND MOUNTED SIGNS |
| 1205.01 | PAVEMENT MARKINGS - LINE TYPES AND OFFSETS |
| 1205.02 | PAVEMENT MARKINGS - TWO LANE AND MULTILANE ROADWAYS |
| 1205.12 | PAVEMENT MARKINGS - BRIDGES |
| 1250.01 | RAISED PAVEMENT MARKERS - INSTALLATION SPACING |
| 1251.01 | RAISED PAVEMENT MARKERS - (PERMANENT AND TEMPORARY) |
| 1261.01 | GUARDRAIL AND BARRIER DELINEATORS - INSTALLATION SPACING |
| 1261.02 | GUARDRAIL AND BARRIER DELINEATORS - TYPES AND MOUNTING |
| 1262.01 | GUARDRAIL END DELINEATION |

## GENERAL NOTES

1. INSTALLATION OF TEMPORARY ROUTE MARKERS, DESTINATION SIGNS, AND ANY NECESSARY MODIFICATIONS TO EXISTING OR PROPOSED REGULATORY OR WARNING SIGNS WILL BE MADE BY OTHERS (STATE OR CITY FORCES) UNLESS OTHERWISE DESIGNATED IN PLANS. PROVIDE A MINIMUM 21 CALENDAR DAY NOTICE TO STATE FORCES BEFORE A ROADWAY IS CLOSED TO TRAFFIC SUCH THAT THE NECESSARY PROVISIONS CAN BE MADE TO INFORM LOCAL EMERGENCY AND LAW ENFORCEMENT PERSONNEL, SCHOOLS OR ANY OTHER PARTIES AFFECTED BY THE ROAD CLOSURE.
2. INSTALL SIGNS BEFORE THE BARRICADES WHEN CLOSING THE ROADWAY TO TRAFFIC. REMOVE BARRICADES BEFORE SIGNS WHEN OPENING THE ROADWAY TO TRAFFIC. INSTALL/REMOVE SIGNS AND BARRICADES WITHIN THE SAME CALENDAR DAY.
3. POSITION WING BARRICADES ON THE SHOULDERS AND SLOPE THE STRIPES DOWNWARD IN THE DIRECTION TOWARD WHICH TRAFFIC MUST TURN IN DETOURING.
4. USE ADDITIONAL TYPE III BARRICADES IN STAGGERED LOCATIONS SUPPLEMENTED WITH SIGN R11-4 "ROAD CLOSED TO THRU TRAFFIC" IN THE EVENT THAT TRAFFIC MUST BE MAINTAINED BEYOND THE DETOUR POINT.
5. SEE STANDARD SPECIFICATION 1089-1 FOR WORK ZONE SIGNS.
6. SEE STANDARD SPECIFICATION 1089-2 FOR WORK ZONE SIGN SUPPORTS.

## LEGEND

- DIRECTION OF TRAFFIC FLOW
- BARRICADE (TYPE III)
- STATIONARY MOUNTED SIGN


WETHERILL ENGINEERING
559 Jones Franklin Rd. Suite 164
Raleigh, N.C. 27606
Liscense No. F-0377
Bus: 919 851 8077
Fax: 919 851 8107
TRANSPORTATION PLANNING/DESIGN - BRIDGE/STRUCTURE DESIGN
CIVIL/SITE DESIGN - GIS/GPS - CONSTRUCTION OBSERVATION


APPROVED: DATE: 7/31/12

SEAL — NORTH CAROLINA PROFESSIONAL SEAL 21116 ENGINEER BOB A. MAY

DIVISION OF HIGHWAYS — STATE OF NORTH CAROLINA — DEPARTMENT OF TRANSPORTATION — WORK ZONE TRAFFIC CONTROL

# ROAD CLOSURE SR 1511 (SUTTON RD.)

7/31/2012
7:00:07 AM
P:\2012\Berthe #54\Traffic\TrafficControl\TCP\BR#_TC_BTCP.dgn

# EROSION CONTROL PLAN

| PROJECT REFERENCE NO. | SHEET NO. |
|---|---|
| 17BP.1.R.34 & 17BP.1.R.35 | EC-01/CONST.04 |
| R/W SHEET NO. | |
| ROADWAY DESIGN ENGINEER | HYDRAULICS ENGINEER |


WETHERILL ENGINEERING
559 Jones Franklin Rd. Suite 164
Raleigh, N.C. 27606
License No. F-0377
Bus: 919 851 8077
Fax: 919 851 8107
TRANSPORTATION PLANNING/DESIGN - BRIDGE/STRUCTURE DESIGN
CIVIL/SITE DESIGN - GIS/GPS - CONSTRUCTION OBSERVATION


CLEARING AND GRUBBING
EROSION CONTROL FOR
CONSTRUCTION SHEET 04

DUSTIN CREECH
LEVEL III NAME
3019
LEVEL III CERTIFICATION NO.

NORTH CAROLINA PROFESSIONAL SEAL 3019 ENGINEER DUSTIN R. CREECH
7-31-2012

## DATUM DESCRIPTION

THE LOCALIZED COORDINATE SYSTEM DEVELOPED FOR THIS PROJECT IS BASED ON THE STATE PLANE COORDINATES ESTABLISHED BY JOYNER KEENY FOR MONUMENT "BL-2"
WITH NAD 83/CORS 96 STATE PLANE GRID COORDINATES OF
NORTHING: 822753.09(ft) EASTING: 2678711.747(ft)
ELEVATION: 5.14(ft)
THE AVERAGE COMBINED GRID FACTOR USED ON THIS PROJECT (GROUND TO GRID) IS: 0.999960761

LOCALIZED HORIZONTAL GROUND DISTANCE FROM
"BL-2" TO -L- STATION 10+35.00 IS
S 8° 32' 20.4" W 259.72'
ALL LINEAR DIMENSIONS ARE LOCALIZED HORIZONTAL DISTANCES
VERTICAL DATUM USED IS NAVD 88

NOTES: ANY DEVIATION FROM OPTIONS GIVEN WILL REQUIRE PRIOR APPROVAL BY ENGINEER.

ADDITIONAL EROSION CONTROL DEVICES MAY NEED TO BE INSTALLED AS DIRECTED BY THE ENGINEER.

ROADSIDE ENVIRONMENTAL UNIT
DEPARTMENT OF TRANSPORTATION
DIVISION OF HIGHWAYS
RALEIGH, N.C.
2012 STANDARD SPECIFICATIONS

## 2012 STANDARD DRAWINGS

| | | | |
|---|---|---|---|
| 1604.01 | Railroad Erosion Control Detail | 1632.01 | Rock Inlet Sediment Trap Type A |
| 1605.01 | Temporary Silt Fence | 1632.02 | Rock Inlet Sediment Trap Type B |
| 1606.01 | Special Sediment Control Fence | 1632.03 | Rock Inlet Sediment Trap Type C |
| 1607.01 | Gravel Construction Entrance | 1633.01 | Temporary Rock Silt Check Type A |
| 1622.01 | Temporary Berms and Slope Drains | 1633.02 | Temporary Rock Silt Check Type B |
| 1630.01 | Riser Basin | 1634.01 | Temporary Rock Sediment Dam Type A |
| 1630.02 | Silt Basin Type B | 1634.02 | Temporary Rock Sediment Dam Type B |
| 1630.03 | Temporary Silt Ditch | 1635.01 | Rock Pipe Inlet Sediment Trap Type A |
| 1630.04 | Stilling Basin | 1635.02 | Rock Pipe Inlet Sediment Trap Type B |
| 1630.05 | Temporary Diversion | 1640.01 | Coir Fiber Baffle |
| 1630.06 | Special Stilling Basin | 1645.01 | Temporary Stream Crossing |
| 1631.01 | Matting Installation | | |

| Std. # | Description | Symbol |
|---|---|---|
| 1605.01 | Temporary Silt Fence | |
| 1632.03 | Rock Inlet Sediment Trap Type C | |
| | Coir Fiber Wattle Break | -CFW- |
| | Turbidity Curtain | |

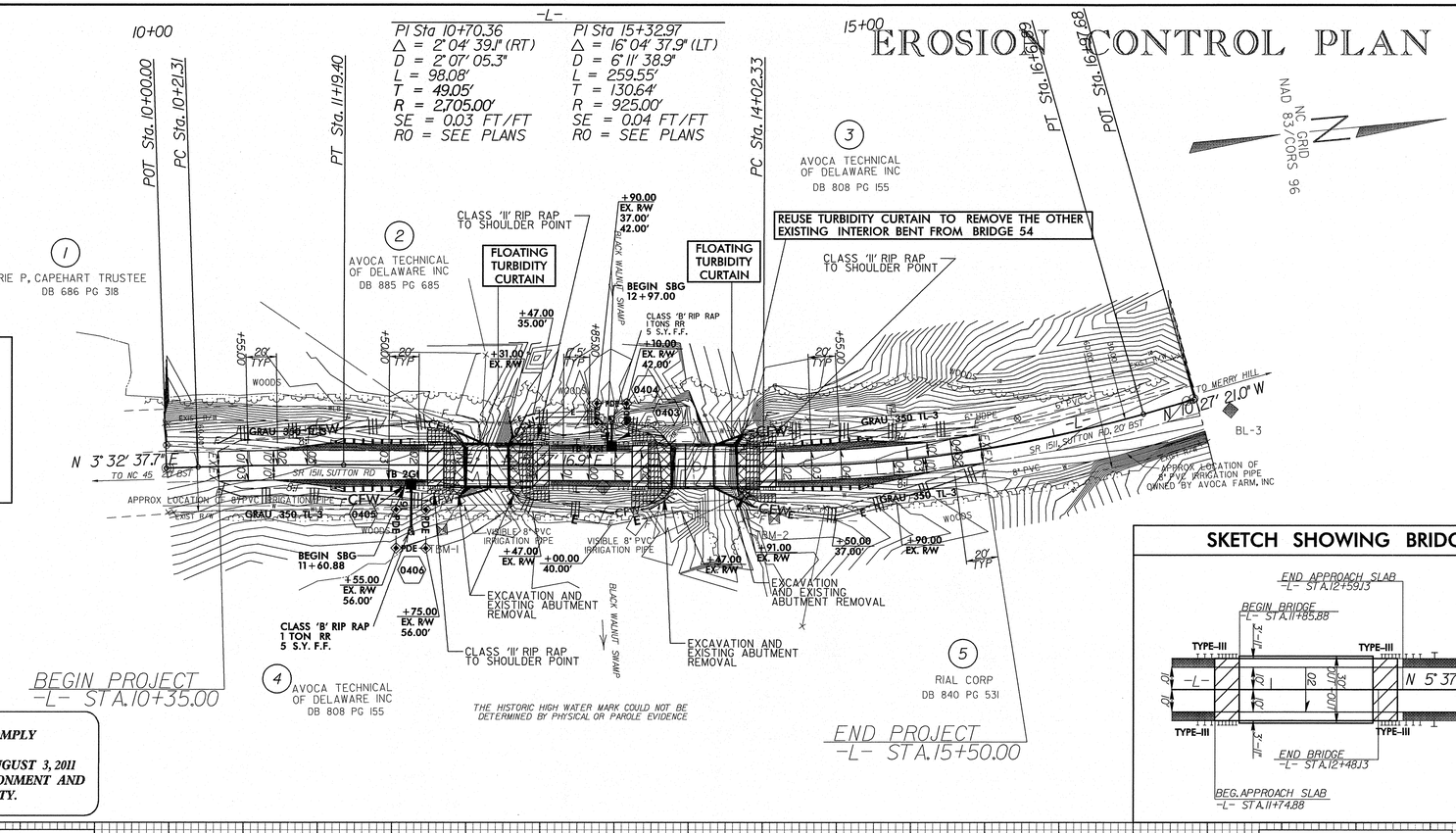


THESE EROSION AND SEDIMENT CONTROL PLANS COMPLY WITH THE REGULATIONS SET FORTH BY THE NCG-010000 GENERAL CONSTRUCTION PERMIT EFFECTIVE AUGUST 3, 2011 ISSUED BY THE NORTH CAROLINA DEPARTMENT OF ENVIRONMENT AND NATURAL RESOURCES DIVISION OF WATER QUALITY.

## SKETCH SHOWING BRIDGE/PAVEMENT RELATIONSHIP

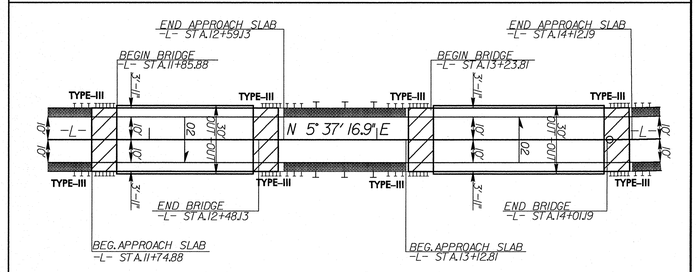


TBM#1 N 822642 E 2678730
BL STA. 8+92.00, 27' RT., EL = 2.80'
BRIDGE NAIL IN BASE OF TWIN 10" MAPLE

TBM#2 N 822666 E 2678744
BL STA. 11+13.00, 35' RT., EL = 3.99'
BRIDGE SPIKE IN BASE OF 10" OAK

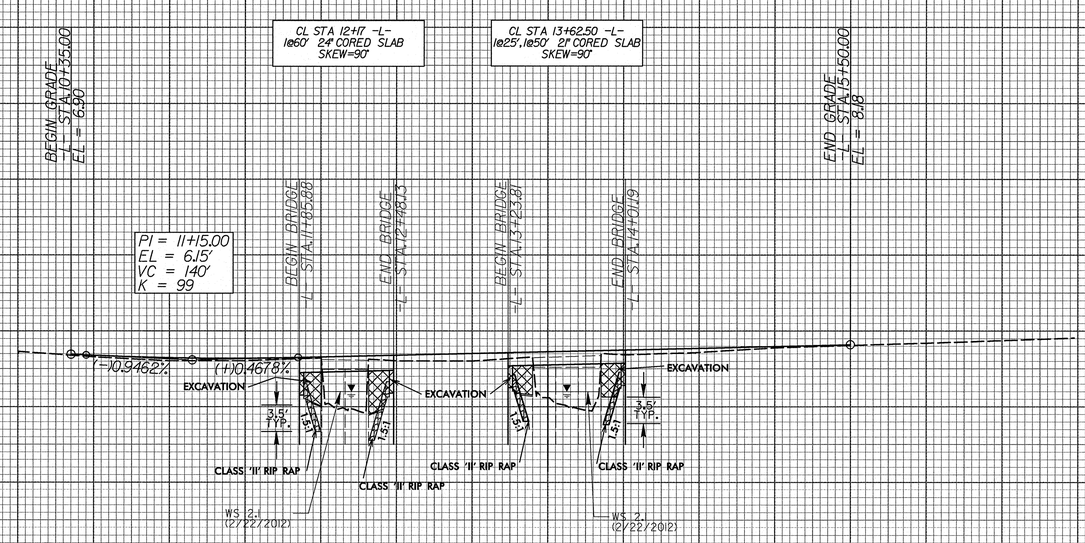


## BRIDGE #55 HYDRAULIC DATA

| | | |
|---|---|---|
| DESIGN DISCHARGE | = 750 | CFS |
| DESIGN FREQUENCY | = 25 | YRS |
| DESIGN HW ELEVATION | = 5.3' | FT |
| BASE DISCHARGE | = 1,100 | CFS |
| BASE FREQUENCY | = 100 | YRS |
| BASE HW ELEVATION | = 6.1' | FT |
| OVERTOPPING DISCHARGE | = 1,500 | CFS |
| OVERTOPPING FREQUENCY | = 500 | YRS |
| OVERTOPPING ELEVATION | = 6.7' | FT |
| DATE OF SURVEY | = 2/22/2012 | |
| W.S. ELEVATION AT DATE OF SURVEY | = 2.1' | FT |

## BRIDGE #54 HYDRAULIC DATA

| | | |
|---|---|---|
| DESIGN DISCHARGE | = 750 | CFS |
| DESIGN FREQUENCY | = 25 | YRS |
| DESIGN HW ELEVATION | = 5.3' | FT |
| BASE DISCHARGE | = 1,100 | CFS |
| BASE FREQUENCY | = 100 | YRS |
| BASE HW ELEVATION | = 6.06' | FT |
| OVERTOPPING DISCHARGE | = 1,500 | CFS |
| OVERTOPPING FREQUENCY | = 500 | YRS |
| OVERTOPPING ELEVATION | = 6.7' | FT |
| DATE OF SURVEY | = 2/22/2012 | |
| W.S. ELEVATION AT DATE OF SURVEY | = 2.1' | FT |


SEE SHEET S-1 THRU S-13 FOR STRUCTURE PLANS (BRIDGE #55)
SEE SHEET S-1 THRU S-16 FOR STRUCTURE PLANS (BRIDGE #54)


REVISIONS

8/17/99

6:24:25 AM
7/31/2012
Bertie #54\EROSION CONTROL\BR#54_EC_PSH4_C&G.dgn

# EROSION CONTROL PLAN

## DATUM DESCRIPTION

THE LOCALIZED COORDINATE SYSTEM DEVELOPED FOR THIS PROJECT IS BASED ON THE STATE PLANE COORDINATES ESTABLISHED BY JOYNER KEENY FOR MONUMENT "BL-2" WITH NAD 83/CORS 96 STATE PLANE GRID COORDINATES OF NORTHING: 822753.09(ft) EASTING: 2678711.747(ft)
ELEVATION: 5.14(ft)
THE AVERAGE COMBINED GRID FACTOR USED ON THIS PROJECT (GROUND TO GRID) IS: 0.999960761

LOCALIZED HORIZONTAL GROUND DISTANCE FROM "BL-2" TO -L- STATION 10+35.00 IS
S 8° 32' 20.4" W 259.72'
ALL LINEAR DIMENSIONS ARE LOCALIZED HORIZONTAL DISTANCES
VERTICAL DATUM USED IS NAVD 88

NOTES: ANY DEVIATION FROM OPTIONS GIVEN WILL REQUIRE PRIOR APPROVAL BY ENGINEER.

ADDITIONAL EROSION CONTROL DEVICES MAY NEED TO BE INSTALLED AS DIRECTED BY THE ENGINEER.

ROADSIDE ENVIRONMENTAL UNIT
DEPARTMENT OF TRANSPORTATION
DIVISION OF HIGHWAYS
RALEIGH, N.C.
2012 STANDARD SPECIFICATIONS

## 2012 STANDARD DRAWINGS

| | | | |
|---|---|---|---|
| 1604.01 | Railroad Erosion Control Detail | 1632.01 | Rock Inlet Sediment Trap Type A |
| 1605.01 | Temporary Silt Fence | 1632.02 | Rock Inlet Sediment Trap Type B |
| 1606.01 | Special Sediment Control Fence | 1632.03 | Rock Inlet Sediment Trap Type C |
| 1607.01 | Gravel Construction Entrance | 1633.01 | Temporary Rock Silt Check Type A |
| 1622.01 | Temporary Berms and Slope Drains | 1633.02 | Temporary Rock Silt Check Type B |
| 1630.01 | Riser Basin | 1634.01 | Temporary Rock Sediment Dam Type A |
| 1630.02 | Silt Basin Type B | 1634.02 | Temporary Rock Sediment Dam Type B |
| 1630.03 | Temporary Silt Ditch | 1635.01 | Rock Pipe Inlet Sediment Trap Type A |
| 1630.04 | Stilling Basin | 1635.02 | Rock Pipe Inlet Sediment Trap Type B |
| 1630.05 | Temporary Diversion | 1640.01 | Coir Fiber Baffle |
| 1630.06 | Special Stilling Basin | 1645.01 | Temporary Stream Crossing |
| 1631.01 | Matting Installation | | |

| Std. # | Description | Symbol |
|---|---|---|
| 1605.01 | Temporary Silt Fence | |
| 1632.03 | Rock Inlet Sediment Trap Type C | |
| | ~~Coir Fiber~~ Wattle Break | -CFW- |
| | Turbidity Curtain | |

***THESE EROSION AND SEDIMENT CONTROL PLANS COMPLY WITH THE REGULATIONS SET FORTH BY THE NCG-010000 GENERAL CONSTRUCTION PERMIT EFFECTIVE AUGUST 3, 2011 ISSUED BY THE NORTH CAROLINA DEPARTMENT OF ENVIRONMENT AND NATURAL RESOURCES DIVISION OF WATER QUALITY.***

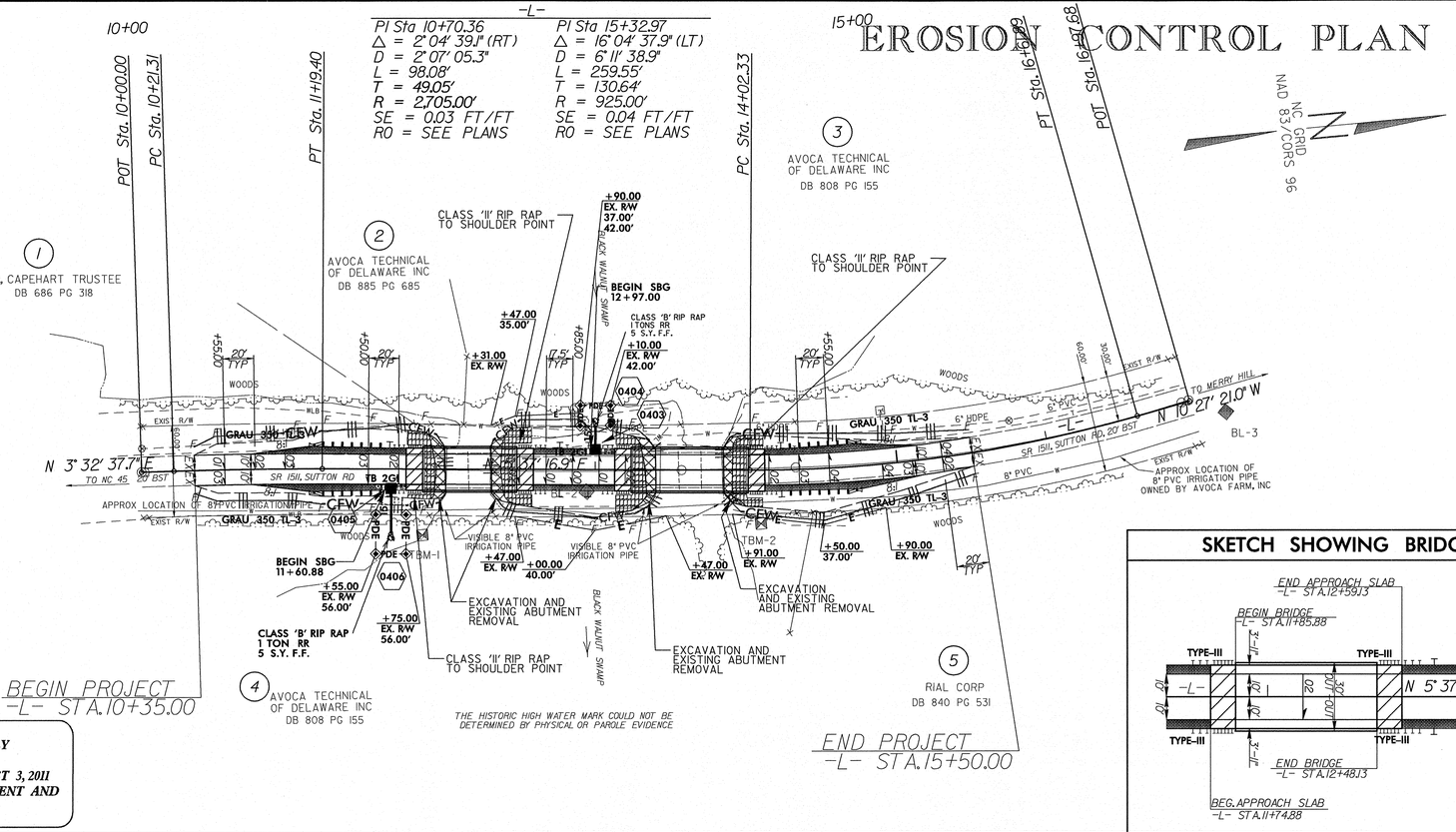


## SKETCH SHOWING BRIDGE/PAVEMENT RELATIONSHIP

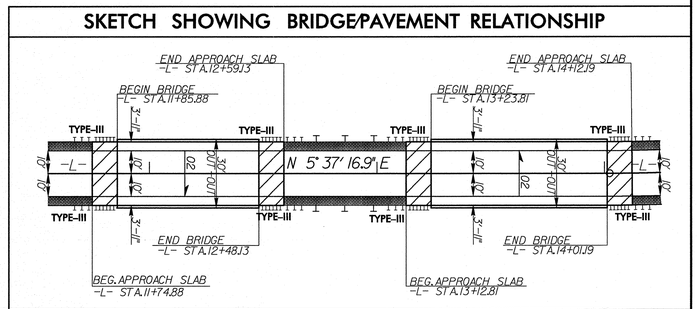


TBM#1 N 822642 E 2678730
BL STA. 8+92.00, 27' RT., EL = 2.80'
BRIDGE NAIL IN BASE OF TWIN 10" MAPLE

TBM#2 N 822666 E 2678744
BL STA. 11+13.00, 35' RT., EL = 3.99'
BRIDGE SPIKE IN BASE OF 10" OAK

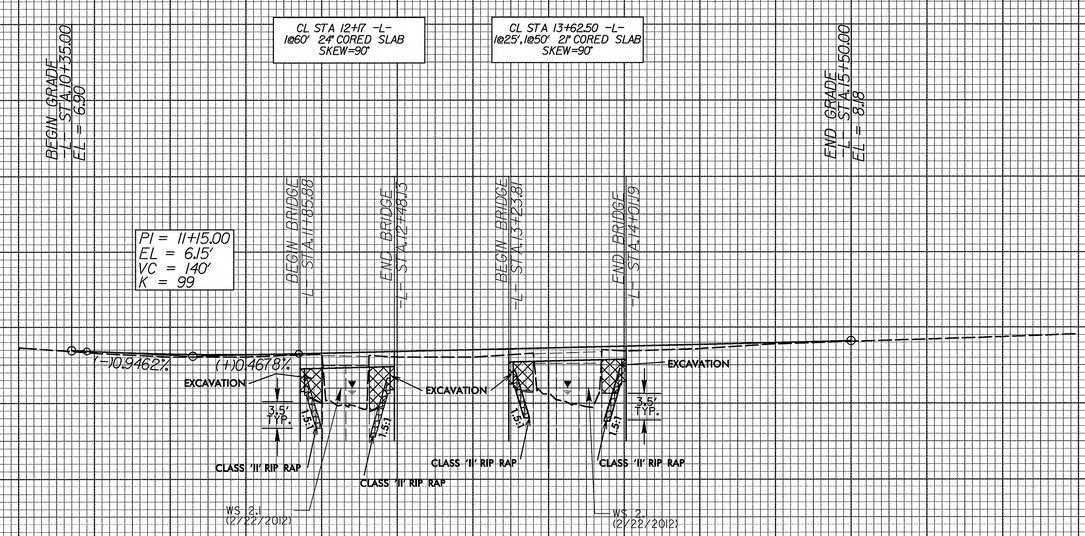


## BRIDGE #55 HYDRAULIC DATA

| | | |
|---|---|---|
| DESIGN DISCHARGE | = 750 | CFS |
| DESIGN FREQUENCY | = 25 | YRS |
| DESIGN HW ELEVATION | = 5.3' | FT |
| BASE DISCHARGE | = 1,100 | CFS |
| BASE FREQUENCY | = 100 | YRS |
| BASE HW ELEVATION | = 6.1' | FT |
| OVERTOPPING DISCHARGE | = 1,500 | CFS |
| OVERTOPPING FREQUENCY | = 500 | YRS |
| OVERTOPPING ELEVATION | = 6.7' | FT |
| DATE OF SURVEY | = 2/22/2012 | |
| W.S. ELEVATION AT DATE OF SURVEY | = 2.1' | FT |

## BRIDGE #54 HYDRAULIC DATA

| | | |
|---|---|---|
| DESIGN DISCHARGE | = 750 | CFS |
| DESIGN FREQUENCY | = 25 | YRS |
| DESIGN HW ELEVATION | = 5.3' | FT |
| BASE DISCHARGE | = 1,100 | CFS |
| BASE FREQUENCY | = 100 | YRS |
| BASE HW ELEVATION | = 6.06' | FT |
| OVERTOPPING DISCHARGE | = 1,500 | CFS |
| OVERTOPPING FREQUENCY | = 500 | YRS |
| OVERTOPPING ELEVATION | = 6.7' | FT |
| DATE OF SURVEY | = 2/22/2012 | |
| W.S. ELEVATION AT DATE OF SURVEY | = 2.1' | FT |

SEE SHEET S-1 THRU S-13 FOR STRUCTURE PLANS (BRIDGE #55)
SEE SHEET S-1 THRU S-16 FOR STRUCTURE PLANS (BRIDGE #54)

| PROJECT REFERENCE NO. | SHEET NO. |
|---|---|
| I7BPJ.R.34 & I7BPJ.R35 | EC-02/CONST.04 |
| R/W SHEET NO. | |
| ROADWAY DESIGN ENGINEER | HYDRAULICS ENGINEER |


WETHERILL ENGINEERING
559 Jones Franklin Rd. Suite 164
Raleigh, N.C. 27606
License No. F-0377
Bus: 919 851 8077
Fax: 919 851 8107
TRANSPORTATION PLANNING/DESIGN - BRIDGE/STRUCTURE DESIGN
CIVIL/SITE DESIGN - GIS/GPS - CONSTRUCTION OBSERVATION


NORTH CAROLINA PROFESSIONAL SEAL 34059 ENGINEER
7-31-2012

DUSTIN CREECH
LEVEL III NAME
3019
LEVEL III CERTIFICATION NO.

REVISIONS

8/17/99

6:58:39 AM
P:\2012\Bertie #54\EROSION CONTROL\BR#54_EC_PSH4_FINAL.dgn
7/31/2012

| PROJECT REFERENCE NO. | SHEET NO. |
|---|---|
| X-XXXX | EC-2G |
| R/W SHEET NO. | |
| ROADWAY DESIGN ENGINEER | HYDRAULICS ENGINEER |

# SILT FENCE WATTLE BREAK DETAIL

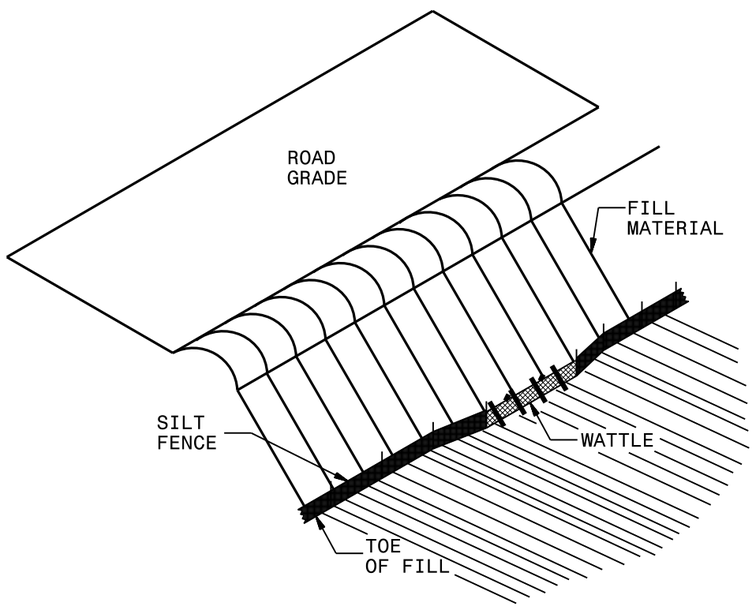


**ISOMETRIC VIEW**

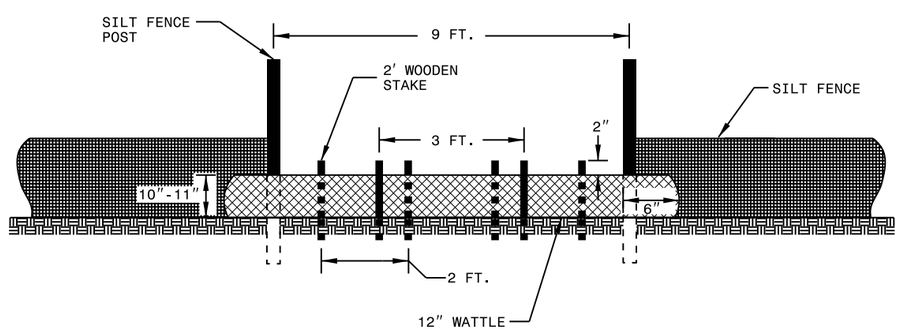


**VIEW FROM SLOPE**

NOTES:

USE MINIMUM 12 IN. DIAMETER EXCELSIOR WATTLE AND LENGTH OF 10 FT.

EXCAVATE A 1 TO 2 INCH TRENCH FOR WATTLE TO BE PLACED.

DO NOT PLACE WATTLE ON TOE OF SLOPE.

USE 2 FT. WOODEN STAKES WITH A 2 IN. BY 2 IN. NOMINAL CROSS SECTION.

INSTALL A MINIMUM OF 2 UPSLOPE STAKES AND 4 DOWNSLOPE STAKES AT AN ANGLE TO WEDGE WATTLE TO GROUND.

PROVIDE STAPLES MADE OF 0.125 IN. DIAMETER STEEL WIRE FORMED INTO A U SHAPE NOT LESS THAN 12″ IN LENGTH.

INSTALL STAPLES APPROXIMATELY EVERY 1 LINEAR FOOT ON BOTH SIDES OF WATTLE AND AT EACH END TO SECURE IT TO THE SOIL.

WATTLE INSTALLATION CAN BE ON OUTSIDE OF THE SILT FENCE AS DIRECTED.

INSTALL TEMPORARY SILT FENCE IN ACCORDANCE WITH SECTION 1605 OF THE STANDARD SPECIFICATIONS.

INSET A

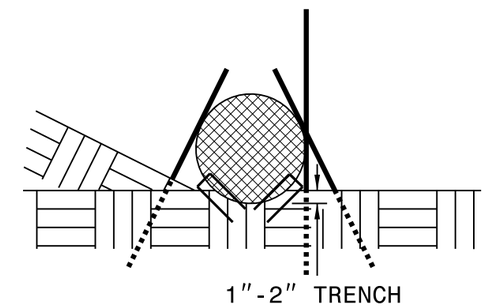


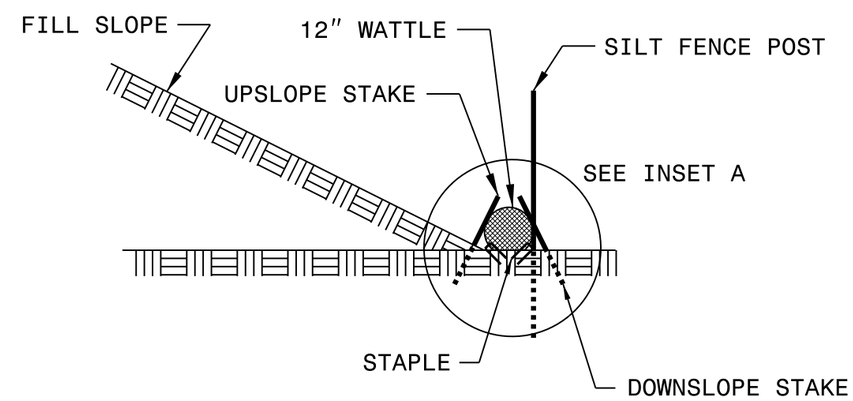


**SIDE VIEW**

| PROJECT REFERENCE NO. | SHEET NO. |
|---|---|
| 17BP.J.R.34 | EC-3(54) |
| ROADWAY DESIGN ENGINEER | HYDRAULICS ENGINEER |

DIVISION OF HIGHWAYS
STATE OF NORTH CAROLINA

# SOIL STABILIZATION SUMMARY SHEET

## MATTING FOR EROSION CONTROL (SLOPES)

| CONST SHEET NO. | LINE | FROM STATION | TO STATION | SIDE | ESTIMATE (SY) |
|---|---|---|---|---|---|
| 4 | -L- | 13+00 | 14+02 | LT | 26.9 |
| 4 | -L- | 13+00 | 14+02 | RT | 40.3 |
| | | | | SUBTOTAL | 67.2 |
| MISCELLANEOUS MATTING TO BE INSTALLED AS DIRECTED BY THE ENGINEER | | | | | |
| | | | | TOTAL | 67.2 |
| | | | | SAY | 68 |

## MATTING FOR EROSION CONTROL

| CONST SHEET NO. | LINE | FROM STATION | TO STATION | SIDE | ESTIMATE (SY) |
|---|---|---|---|---|---|

| PROJECT REFERENCE NO. | SHEET NO. |
|---|---|
| 17BP.J.R.35 | EC-3(55) |
| ROADWAY DESIGN ENGINEER | HYDRAULICS ENGINEER |

DIVISION OF HIGHWAYS
STATE OF NORTH CAROLINA

# SOIL STABILIZATION SUMMARY SHEET

## MATTING FOR EROSION CONTROL (SLOPES)

| CONST SHEET NO. | LINE | FROM STATION | TO STATION | SIDE | ESTIMATE (SY) |
|---|---|---|---|---|---|
| 4 | -L- | 11+50 | 12+50 | LT | 42.3 |
| 4 | -L- | 11+50 | 12+50 | RT | 10.5 |
| | | | | SUBTOTAL | 52.8 |
| MISCELLANEOUS MATTING TO BE INSTALLED AS DIRECTED BY THE ENGINEER | | | | | |
| | | | | TOTAL | 52.8 |
| | | | | SAY | 53 |

## MATTING FOR EROSION CONTROL

| CONST SHEET NO. | LINE | FROM STATION | TO STATION | SIDE | ESTIMATE (SY) |
|---|---|---|---|---|---|

| PROJECT REFERENCE NO. | SHEET NO. |
|---|---|
| 17BP.1.R.34 & 17BP.1.R.35 | EC-3B |
| ROADWAY DESIGN ENGINEER | HYDRAULICS ENGINEER |

DIVISION OF HIGHWAYS
STATE OF NORTH CAROLINA

# SOIL STABILIZATION TIMEFRAMES

| SITE DESCRIPTION | STABILIZATION TIME | TIMEFRAME EXCEPTIONS |
|---|---|---|
| PERIMETER DIKES, SWALES, DITCHES AND SLOPES | 7 DAYS | NONE |
| HIGH QUALITY WATER (HQW) ZONES | 7 DAYS | NONE |
| SLOPES STEEPER THAN 3:1 | 7 DAYS | IF SLOPES ARE 10' OR LESS IN LENGTH AND ARE NOT STEEPER THAN 2:1, 14 DAYS ARE ALLOWED. |
| SLOPES 3:1 OR FLATTER | 14 DAYS | 7 DAYS FOR SLOPES GREATER THAN 50' IN LENGTH. |
| ALL OTHER AREAS WITH SLOPES FLATTER THAN 4:1 | 14 DAYS | NONE, EXCEPT FOR PERIMETERS AND HQW ZONES. |

| PROJECT REFERENCE NO. | SHEET NO. |
|---|---|
| 17BP.J.R.34 & 17BP.J.R.35 | U0-1 |
| UTILITIES BY OTHERS | |


WETHERILL ENGINEERING
559 Jones Franklin Rd. Suite 164
Raleigh, N.C. 27606
License No. F-0377
Bus: 919 851 8077
Fax: 919 851 8107


TRANSPORTATION PLANNING/DESIGN - BRIDGE/STRUCTURE DESIGN
CIVIL/SITE DESIGN - GIS/GPS - CONSTRUCTION OBSERVATION

**INCOMPLETE PLANS**
DO NOT USE FOR R/W ACQUISITION

**PRELIMINARY PLANS**
DO NOT USE FOR CONSTRUCTION

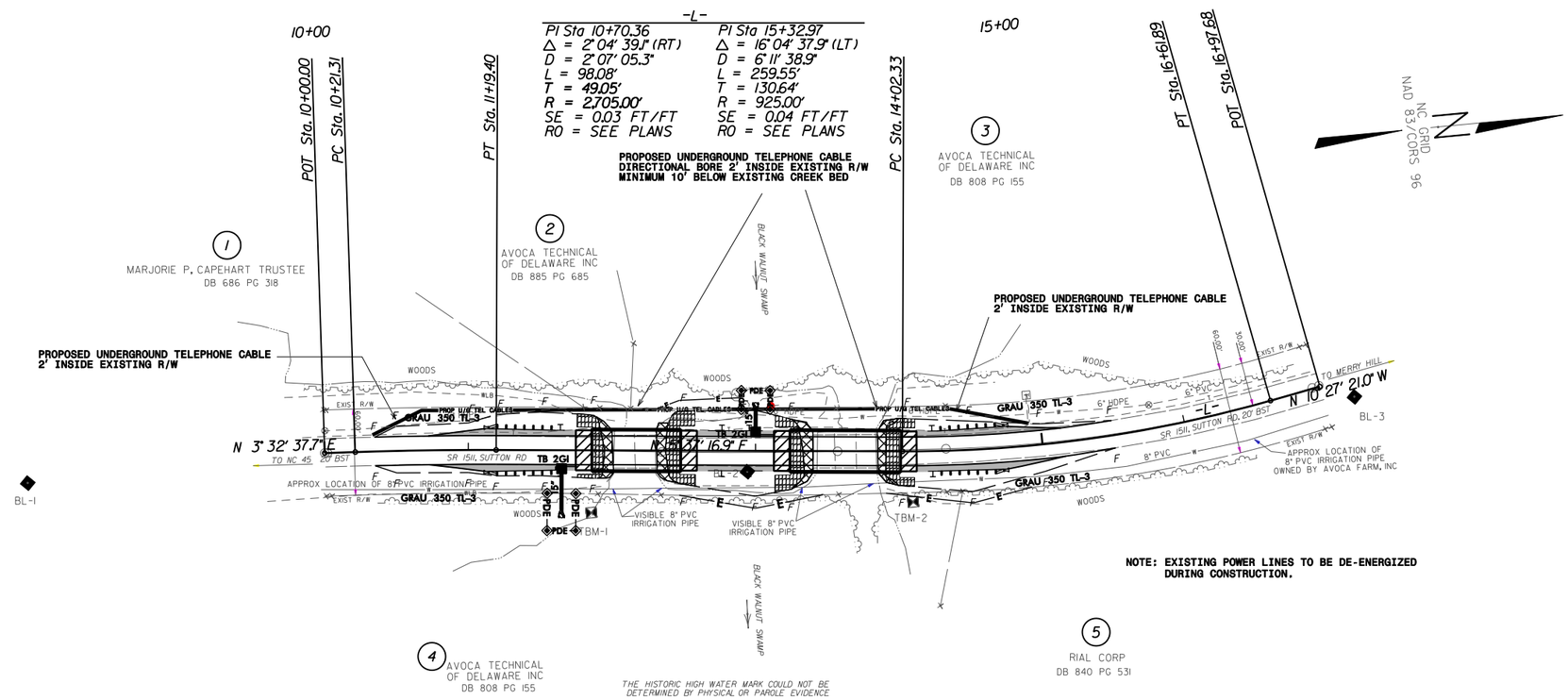


**NOTE: EXISTING POWER LINES TO BE DE-ENERGIZED DURING CONSTRUCTION.**


1:45:25 PM
P:\2012\Bertie #54\Utilities\BR#54&55_utl_psh.dgn
7/30/2012

| PROJ. REFERENCE NO. | SHEET NO. |
|---|---|
| 17BP.1.R.34 & 17BP.1.R.35 | X-1A |

# STATE OF NORTH CAROLINA
# DIVISION OF HIGHWAYS

NOTE: EMBANKMENT COLUMN DOES NOT INCLUDE BACKFILL FOR UNDERCUT

## *CROSS-SECTION SUMMARY*

| Station<br>L | Uncl. Exc.<br>(cu. yd.) | Embt<br>(cu. yd.) |
|---|---|---|
| 10+50.00 | 0 | 0 |
| 11+00.00 | 1 | 10 |
| 11+19.40 | 0 | 10 |
| 11+50.00 | 0 | 26 |
| 12+50.00 | 1 | 174 |
| 13+00.00 | 0 | 117 |
| 14+02.33 | 2 | 188 |
| 14+50.00 | 1 | 64 |
| 15+00.00 | 1 | 35 |

**Approximate quantities only. Unclassified excavation, borrow excavation, shoulder borrow, fine grading, clearing and grubbing, breaking of existing pavement and removal of existing pavement will be paid for at the lump sum price for "Grading".**

| 0 2.5 5 | PROJ. REFERENCE NO. | SHEET NO. |
|---|---|---|
| | 17BP.1.R.34 & 17BP.1.R.35 | X-1 |

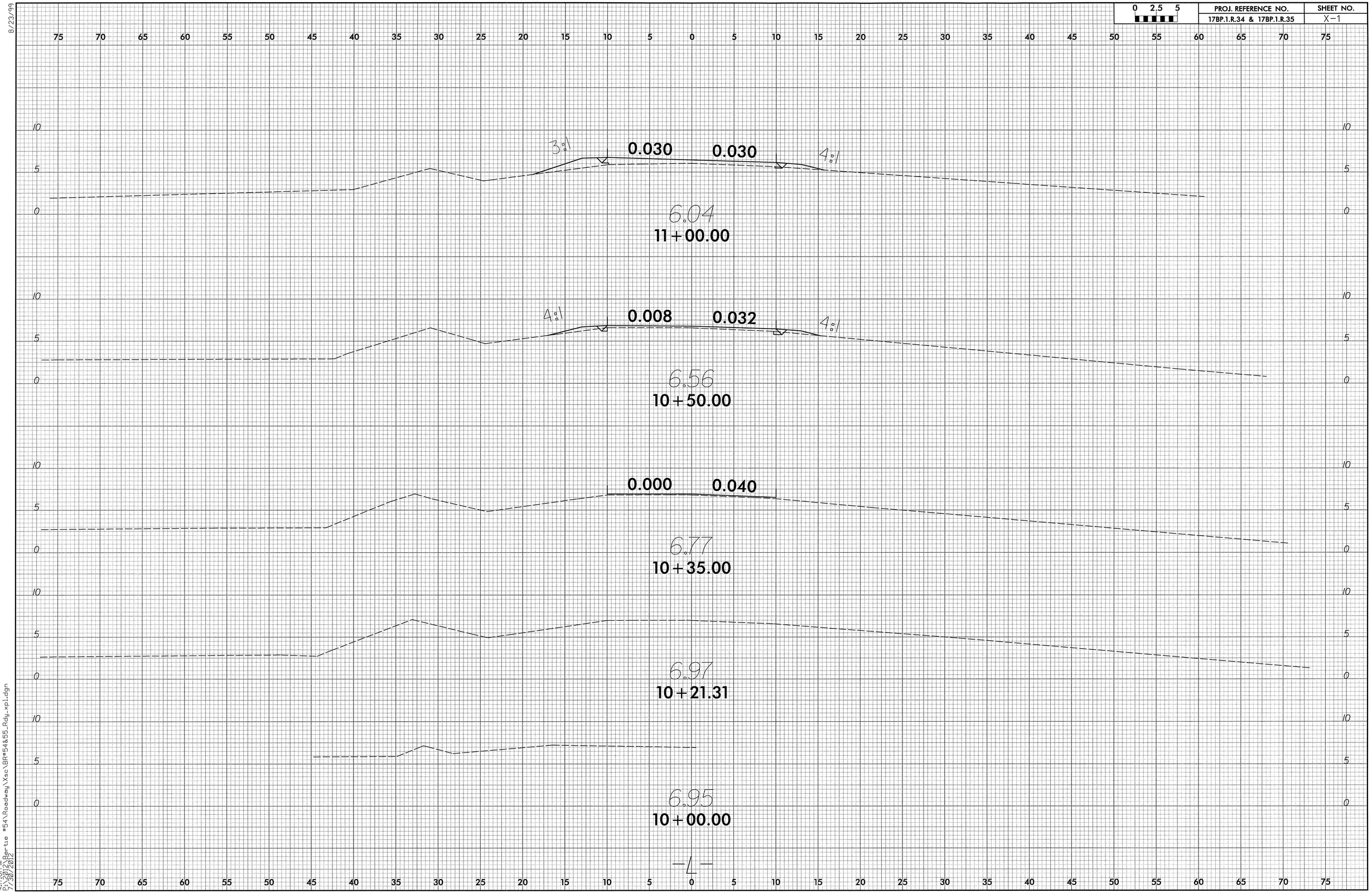




8/23/99
4:17:01 PM
P:\2012\Berrie #54\Roadway\Xsc\BR#54&55_Rdy_xp1.dgn
7/30/2012

| 0 2.5 5 | PROJ. REFERENCE NO. | SHEET NO. |
|---|---|---|
| | 17BP.1.R.34 & 17BP.1.R.35 | X-2 |

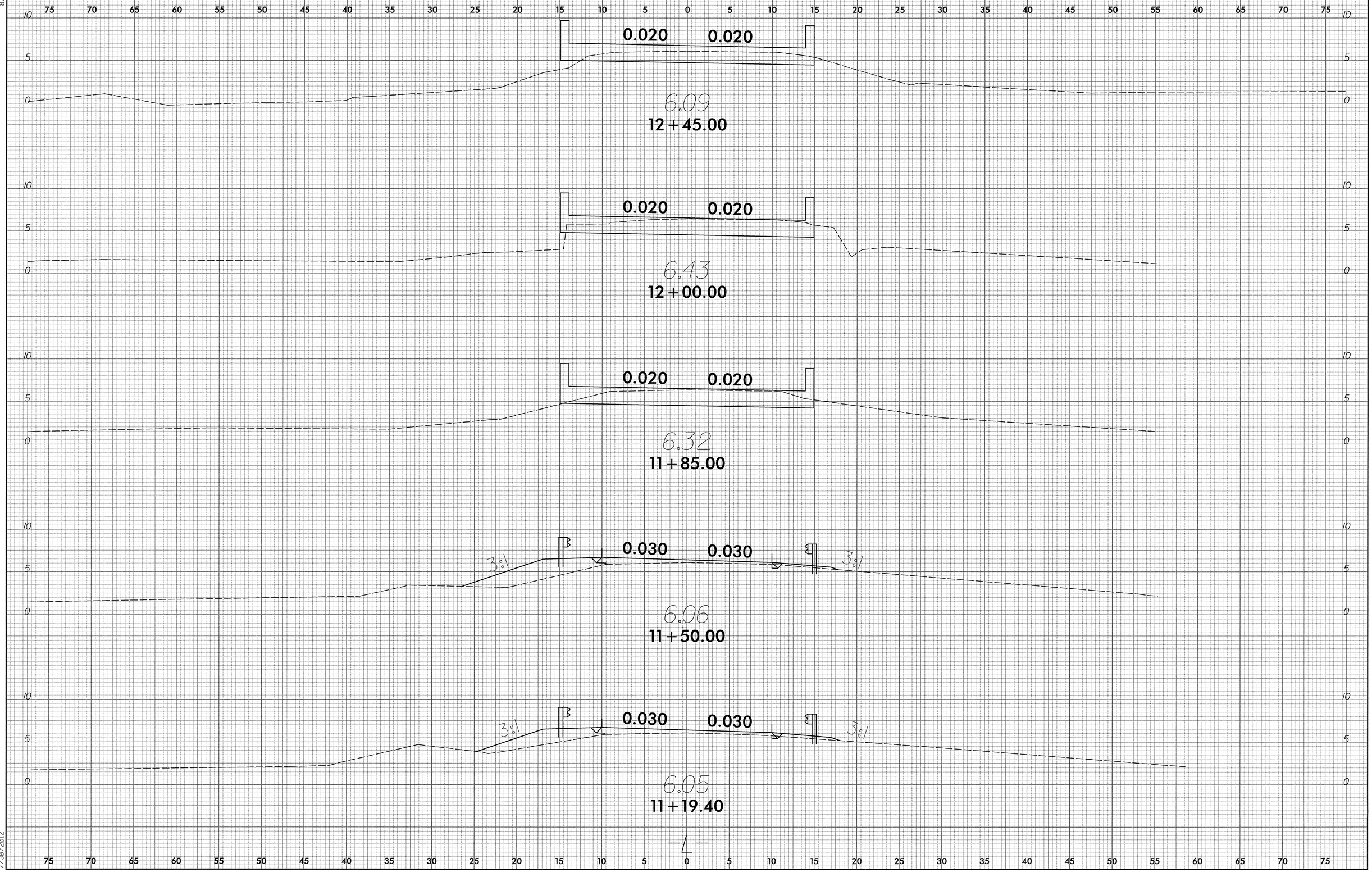




8/23/99
4:17:18 PM
P:\2012\Berrie #54\Roadway\Xsec\BR#54&55_Rdy_xp1.dgn
7/30/2012

| 0 2.5 5 | PROJ. REFERENCE NO. | SHEET NO. |
|---|---|---|
| | 17BP.1.R.34 & 17BP.1.R.35 | X-3 |

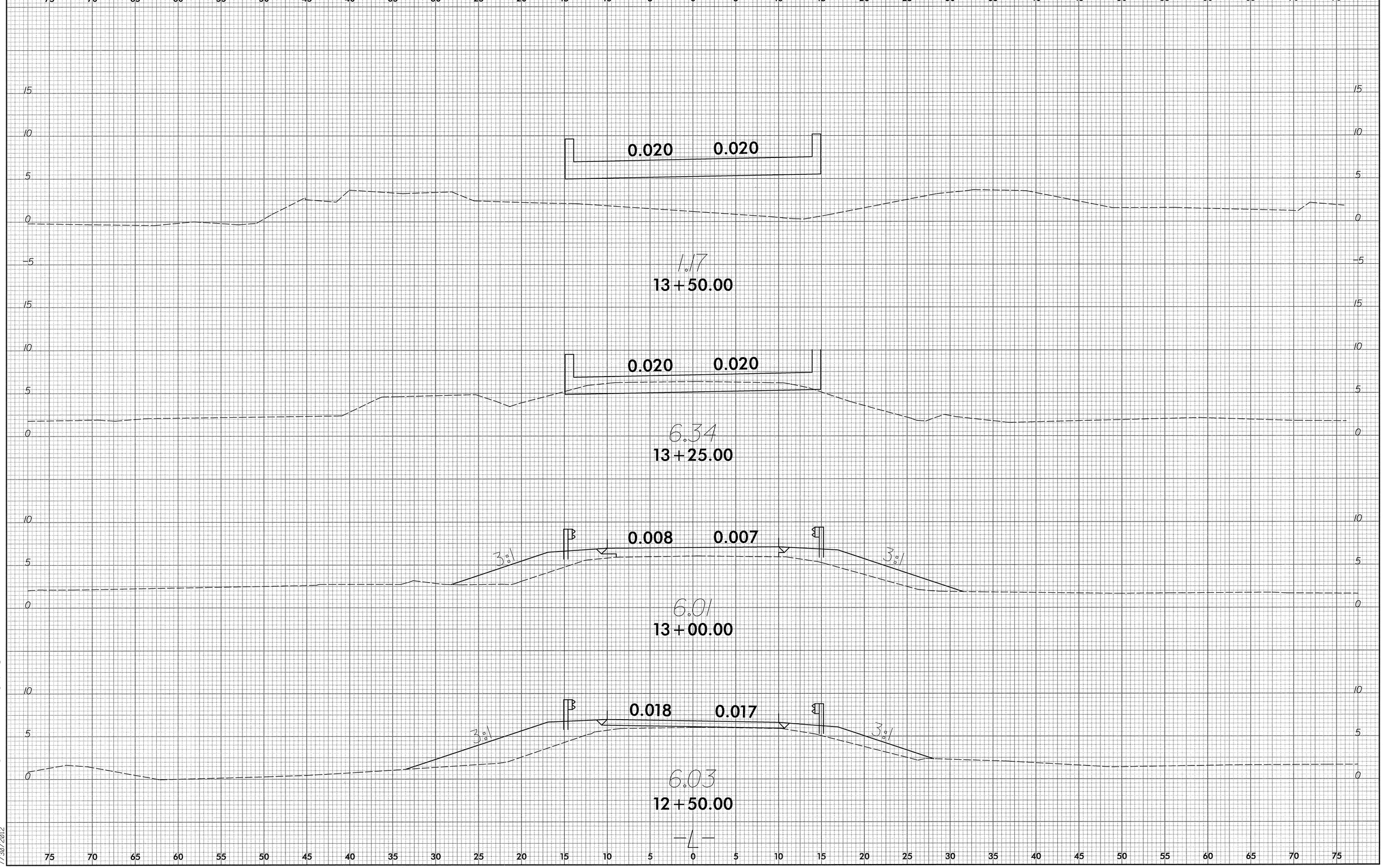


8/23/99

4:17:33 PM
P:\2012\Bertie #54\Roadway\Xsc\BR#54&55_Rdy_xpl.dgn
7/30/2012

| 0 2.5 5 | PROJ. REFERENCE NO. | SHEET NO. |
|---|---|---|
| | 17BP.1.R.34 & 17BP.1.R.35 | X-4 |

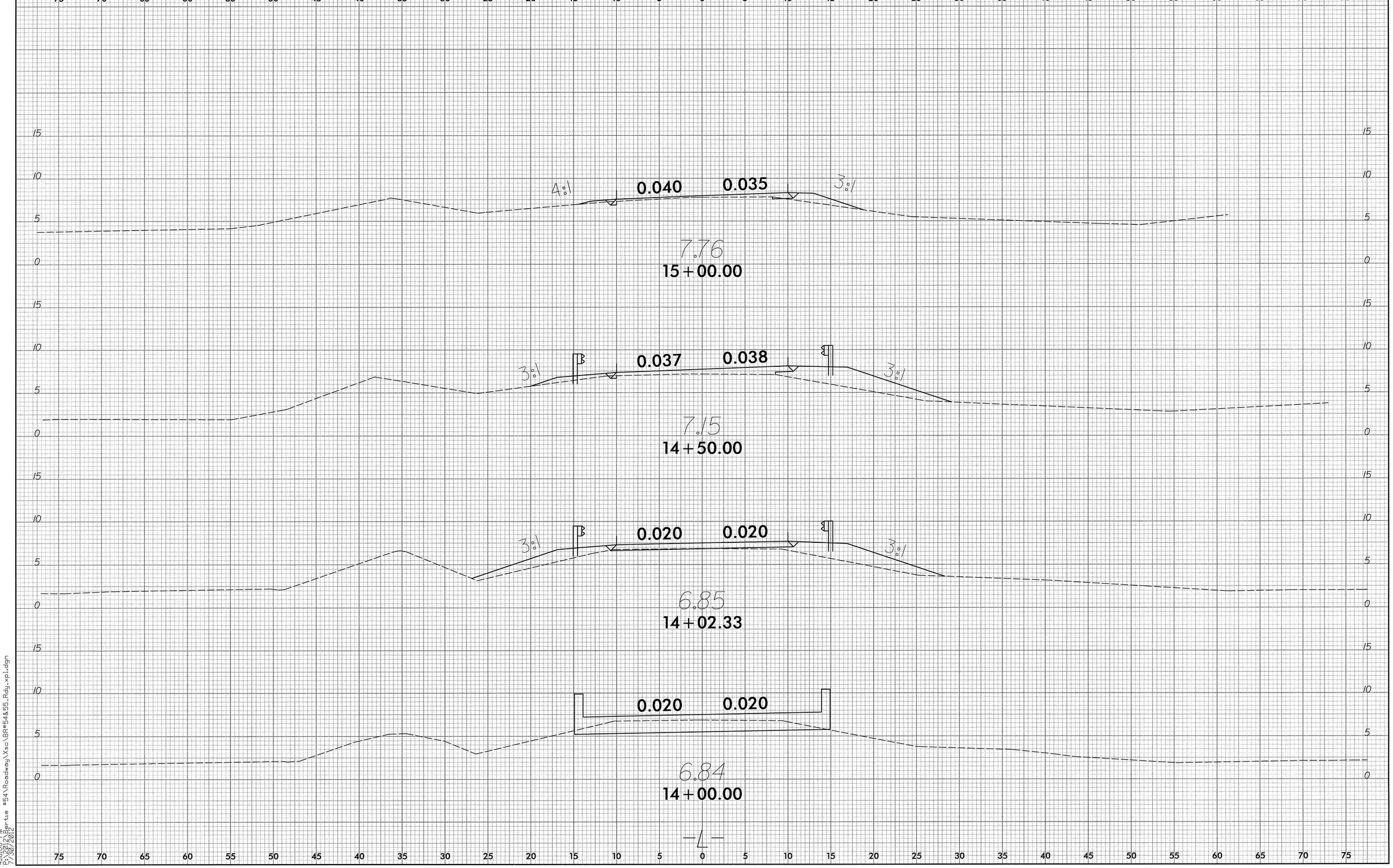




8/23/99
4:18:00 PM
P:\2012\Ber-tie #54\Roadway\Xsc\BR#54&55_Rdy_xpl.dgn
7/30/2012

8/23/99

| 0 2.5 5 | PROJ. REFERENCE NO. | SHEET NO. |
|---|---|---|
| | 17BP.1.R.34 & 17BP.1.R.35 | X-5 |

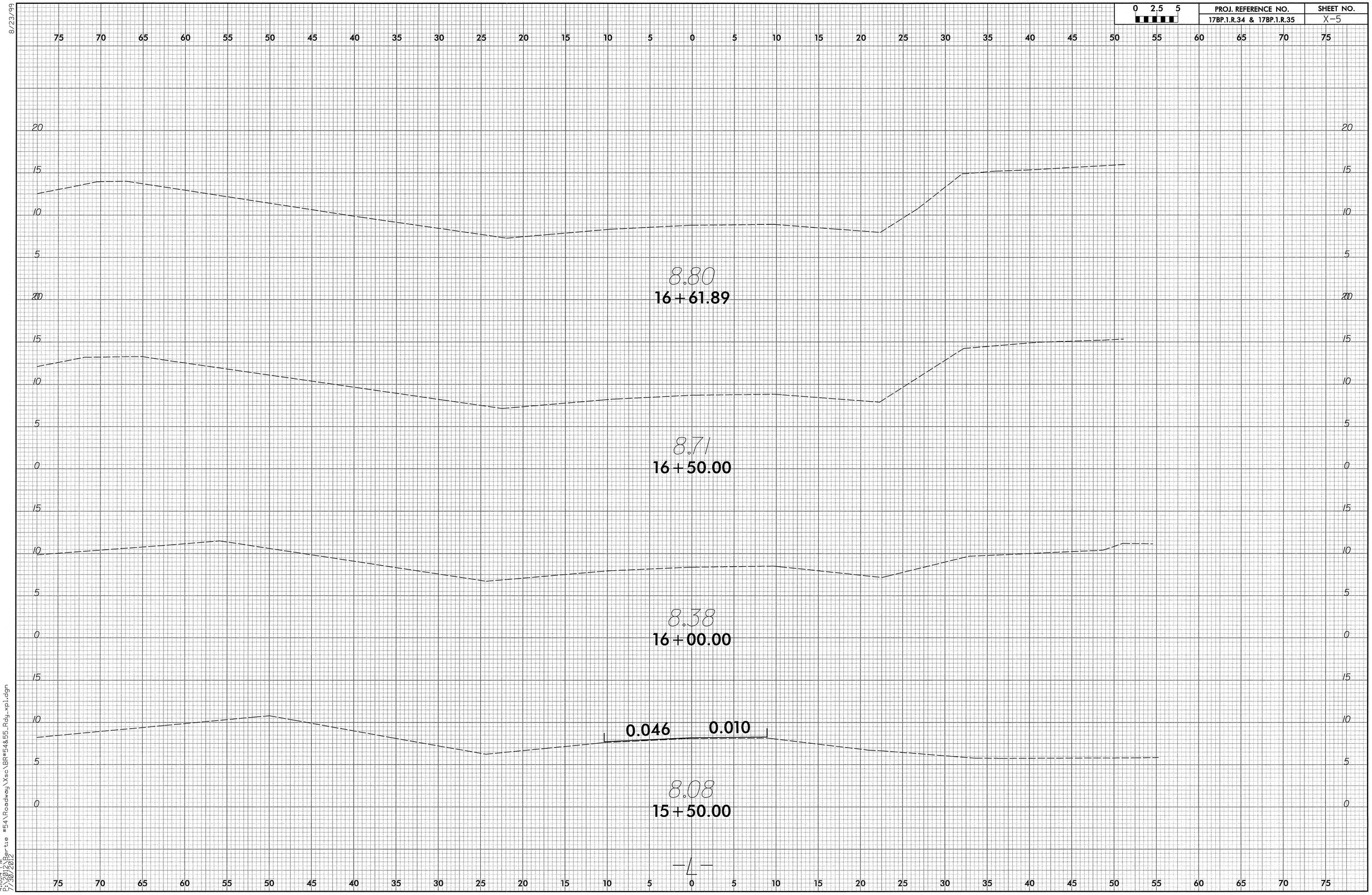


4:18:14 PM
P:\2012\Bertie #54\Roadway\Xsc\BR#54855_Rdy_xpl.dgn
7/30/2012

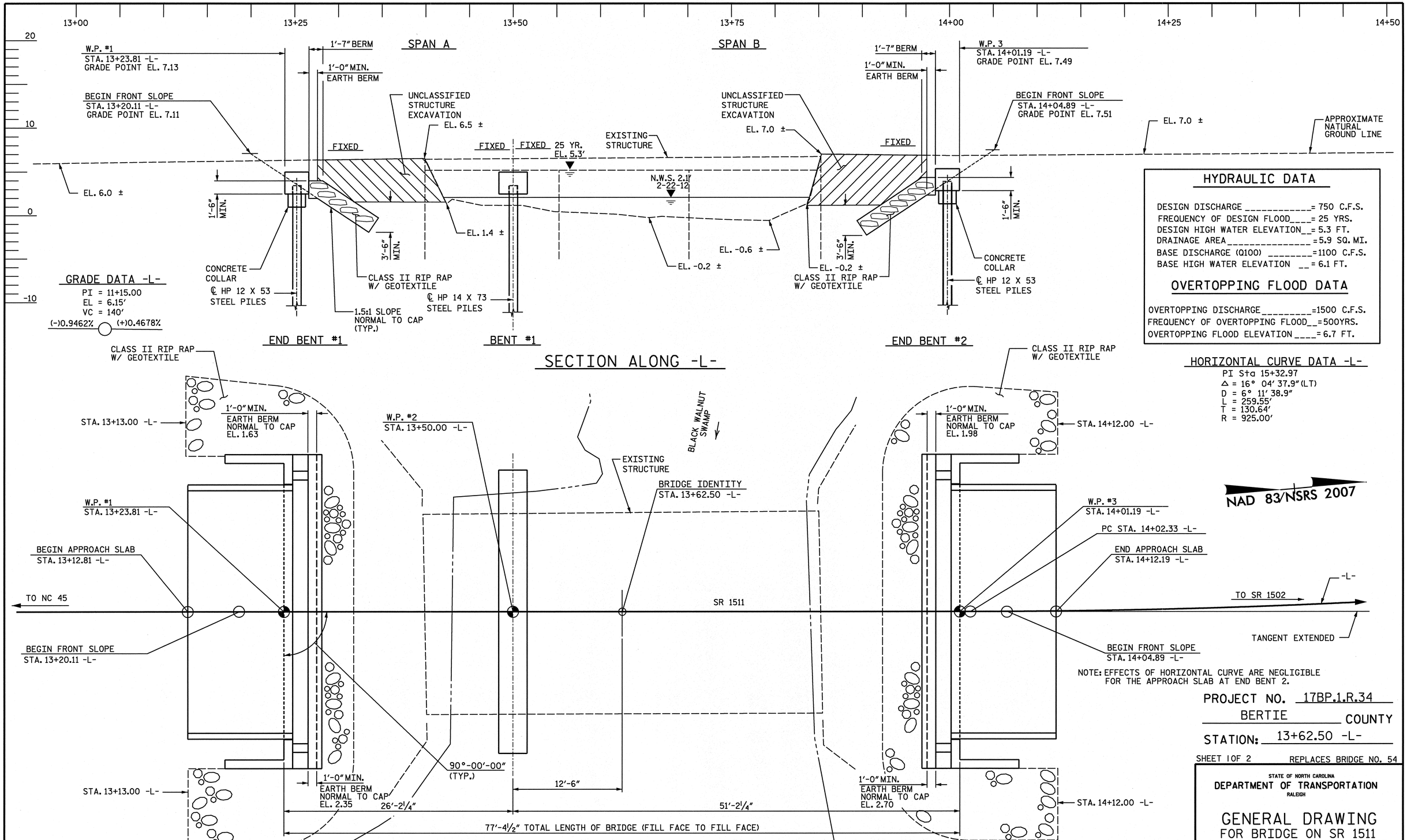


PROJECT NO. 17BP.1.R.34

BERTIE COUNTY

STATION: 13+62.50 -L-

SHEET 1 OF 2 REPLACES BRIDGE NO. 54

STATE OF NORTH CAROLINA
DEPARTMENT OF TRANSPORTATION
RALEIGH

# GENERAL DRAWING
## FOR BRIDGE ON SR 1511 OVER BLACK WALNUT SWAMP BETWEEN NC 45 AND SR 1502

NORTH CAROLINA PROFESSIONAL SEAL 22072 ENGINEER JOHN ARTHUR DILWORTH 7-26-12

WETHERILL ENGINEERING
559 Jones Franklin Rd. Suite 164
Raleigh, N.C. 27606
Bus: 919 851 8077
Fax: 919 851 8107
License: F-0377

TRANSPORTATION PLANNING/DESIGN - BRIDGE/STRUCTURE DESIGN
CIVIL/SITE DESIGN - GIS/GPS - CONSTRUCTION OBSERVATION

| REVISIONS | | | | | | | SHEET NO. |
|---|---|---|---|---|---|---|---|
| NO. | BY: | DATE: | NO. | BY: | DATE: | | S-1 |
| 1 | | | 3 | | | | TOTAL SHEETS |
| 2 | | | 4 | | | | 16 |

DRAWN BY : J. PENDERGRAFT DATE : 6/12
CHECKED BY : J. DILWORTH DATE : 6/12

P:\2012\Bertie #54\Structures\06\BRIDGE 54_STR_GD1.dgn
7/26/2012 9:00:14 AM

TBM #2, SPIKE IN 10" OAK BL STA. 11+13.00, 35.00' RT. N 822866 E 2678744, EL = 3.99'

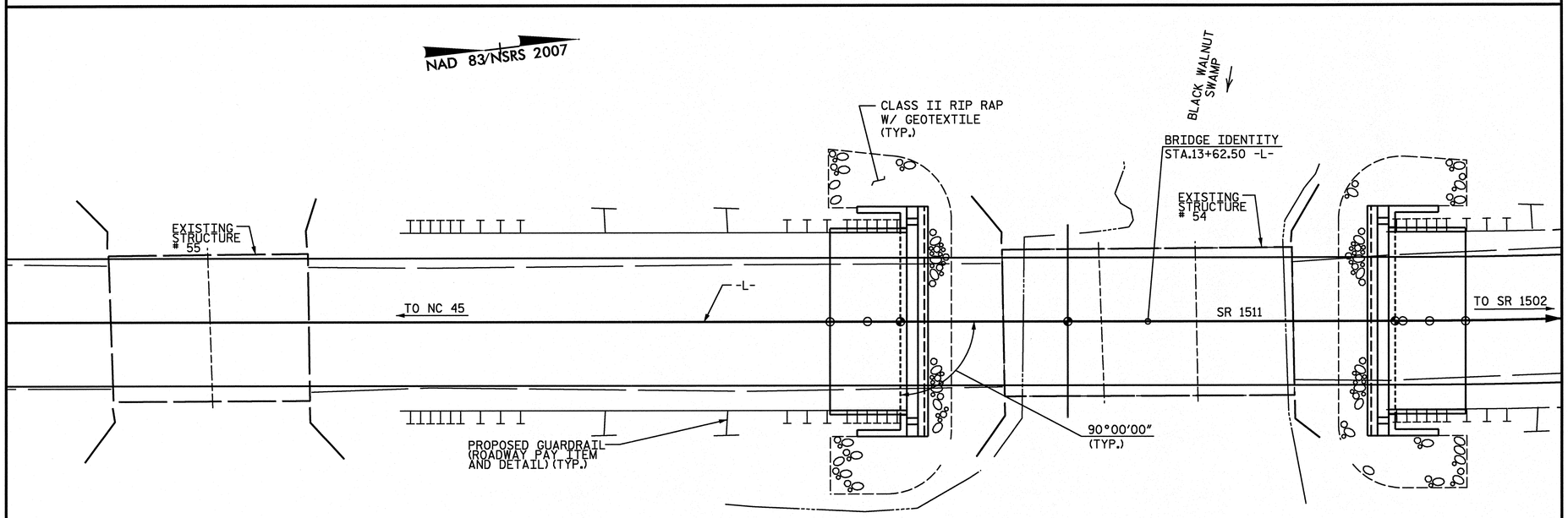


FOR UTILITY INFORMATION, SEE UTILITY PLANS AND SPECIAL PROVISIONS.

## LOCATION SKETCH

## TOTAL BILL OF MATERIAL

| | REMOVAL OF EXISTING STRUCTURE | PDA TESTING | UNCLASSIFIED STRUCTURE EXCAVATION | CLASS AA CONCRETE | BRIDGE APPROACH SLABS | EPOXY COATED REINFORCING STEEL | HP 12 x 53 STEEL PILES | | HP 14 x 73 STEEL PILES | | PILE REDRIVES | VERTICAL CONCRETE BARRIER RAIL | RIP RAP CLASS II (2'-0" THICK) | GEOTEXTILE FOR DRAINAGE | ELASTOMERIC BEARINGS | 3'-0" X 1'-9" PRESTRESSED CONCRETE CORED SLABS | |
|---|---|---|---|---|---|---|---|---|---|---|---|---|---|---|---|---|---|
| | LUMP SUM | EACH | LUMP SUM | CU. YDS. | LUMP SUM | LBS. | NO. | LIN. FT. | NO. | LIN. FT. | EACH | LIN. FT. | TONS | SQ. YD. | LUMP SUM | NO. | LIN. FT. |
| SUPERSTRUCTURE | LUMP SUM | | | | LUMP SUM | | | | | | | 150.25 | | | | 20 | 750'-0" |
| END BENT 1 | | | LUMP SUM | 13.0 | | 1932 | 5 | 275 | | | 2 | | 115 | 123 | | | |
| BENT 1 | | | | 9.8 | | 1909 | | | 7 | 441 | 2 | | | | | | |
| END BENT 2 | | | LUMP SUM | 13.0 | | 1932 | 5 | 360 | | | 2 | | 130 | 140 | | | |
| TOTAL | LUMP SUM | 1 | LUMP SUM | 35.8 | LUMP SUM | 5773 | 10 | 635 | 7 | 441 | 6 | 150.25 | 245 | 263 | LUMP SUM | 20 | 750'-0" |

## NOTES:

ASSUMED LIVE LOAD = HL-93 OR ALTERNATE LOADING.

FOR OTHER DESIGN DATA AND GENERAL NOTES, SEE SHEET SN.

FOR EROSION CONTROL MEASURES, SEE EROSION CONTROL PLANS.

THIS BRIDGE HAS BEEN DESIGNED IN ACCORDANCE WITH THE AASHTO LRFD BRIDGE DESIGN SPECIFICATIONS FOR SEISMIC PERFORMANCE ZONE 1.

THE EXISTING STRUCTURE CONSISTING OF 2 SPANS @ 15'-0" AND 1 SPAN @ 15'-6" WITH A TIMBER FLOOR ON TIMBER JOISTS SUPERSTRUCTURE AND A CLEAR ROADWAY WIDTH OF 23.2' ON A SUBSTRUCTURE CONSISTING OF TIMBER CAPS ON TIMBER PILES AND LOCATED AT THE PROPOSED STRUCTURE LOCATION SHALL BE REMOVED.

REMOVAL OF THE EXISTING BRIDGE SHALL BE PERFORMED SO AS NOT TO ALLOW DEBRIS TO FALL INTO THE WATER. THE CONTRACTOR SHALL REMOVE THE BRIDGE AND SUBMIT PLANS FOR DEMOLITION IN ACCORDANCE WITH ARTICLE 402-2 OF THE STANDARD SPECIFICATIONS.

THE MATERIAL SHOWN IN THE CROSS-HATCHED AREA SHALL BE EXCAVATED FOR A DISTANCE OF 25 FT. EACH SIDE OF CENTERLINE ROADWAY AS DIRECTED BY ENGINEER. THIS WORK WILL BE PAID FOR AT THE CONTRACT LUMP SUM PRICE FOR UNCLASSIFIED STRUCTURE EXCAVATION. SEE SECTION 412 OF THE STANDARD SPECIFICATIONS.

THE SUBSTRUCTURE OF THE EXISTING BRIDGE INDICATED ON THE PLANS IS FROM THE BEST INFORMATION AVAILABLE. SINCE THIS INFORMATION IS SHOWN FOR THE CONVENIENCE OF THE CONTRACTOR, THE CONTRACTOR SHALL HAVE NO CLAIM WHATSOEVER AGAINST THE DEPARTMENT OF TRANSPORTATION FOR ANY DELAYS OR ADDITIONAL COST INCURRED BASED ON DIFFERENCE BETWEEN THE EXISTING BRIDGE SUBSTRUCTURE SHOWN ON THE PLANS AND THE ACTUAL CONDITIONS AT THE PROJECT SITE.

ASPHALT WEARING SURFACE IS INCLUDED IN ROADWAY QUANTITY ON ROADWAY PLANS.

CLASS AA CONCRETE SHALL BE USED IN ALL CAST-IN-PLACE END BENT & BENT CAPS AND SHALL CONTAIN CALCIUM NITRITE CORROSION INHIBITOR IN ACCORDANCE WITH THE STANDARD SPECIFICATIONS.

ALL BAR SUPPORTS USED IN THE VERTICAL CONCRETE BARRIER RAIL, END BENT CAPS, AND ALL INCIDENTAL REINFORCING STEEL SHALL BE EPOXY COATED IN ACCORDANCE WITH THE STANDARD SPECIFICATIONS.

THE CONCRETE IN THE BENT CAP AND END BENT CAPS OF BENT 1 AND END BENTS NO. 1 & 2 SHALL CONTAIN SILICA FUME. SILICA FUME SHALL BE SUBSTITUTED FOR 5% OF THE PORTLAND CEMENT BY WEIGHT. IF THE OPTION OF ARTICLE 1024-1 OF THE STANDARD SPECIFICATIONS TO PARTIALLY SUBSTITUTE CLASS F FLY ASH FOR PORTLAND CEMENT IS EXERCISED, THEN THE RATE OF FLY ASH SUBSTITUTION SHALL BE REDUCED TO 1.0 LB. OF FLY ASH PER 1.0 LB. NO PAYMENT WILL BE MADE FOR THIS SUBSTITUTION AS IT IS CONSIDERED INCIDENTAL TO THE VARIOUS PAY ITEMS.

THIS STRUCTURE HAS BEEN DESIGNED IN ACCORDANCE WITH HEC 18, "EVALUATING SCOUR AT BRIDGES", MAY 2001.

FOR SUBMITTAL OF WORKING DRAWINGS, SEE SPECIAL PROVISIONS.

FOR FALSEWORK AND FORMWORK, SEE SPECIAL PROVISIONS.

FOR CRANE SAFETY, SEE SPECIAL PROVISIONS.

FOR GROUT FOR STRUCTURES, SEE SPECIAL PROVISIONS.

FOR PILE DRIVING CRITERIA, SEE SPECIAL PROVISIONS.

## FOUNDATION NOTES:

FOR PILES, SEE SECTION 450 OF THE STANDARD SPECIFICATIONS.

PILES AT END BENT NO. 1 ARE DESIGNED FOR A FACTORED RESISTANCE OF 55 TONS PER PILE. DRIVE PILES TO A REQUIRED DRIVING RESISTANCE OF 95 TONS.

PILES AT END BENT NO. 2 ARE DESIGNED FOR A FACTORED RESISTANCE OF 85 TONS PER PILE. DRIVE PILES TO A REQUIRED DRIVING RESISTANCE OF 145 TONS.

PILES AT BENT NO. 1 ARE DESIGNED FOR A FACTORED RESISTANCE OF 90 TONS PER PILE. DRIVE PILES TO A REQUIRED DRIVING RESISTANCE OF 165 TONS. THE REQUIRED DRIVING RESISTANCE INCLUDES ADDITIONAL RESISTANCE FOR DOWNDRUG OR SCOUR.

INSTALL PILES AT BENT NO. 1 TO A TIP ELEVATION NO HIGHER THAN -29.0 FEET.

THE SCOUR CRITICAL ELEVATION FOR BENT NO. 1 IS ELEVATION -7.5 FEET. SCOUR CRITICAL ELEVATIONS ARE USED TO MONITOR POSSIBLE SCOUR PROBLEMS DURING THE LIFE OF THE STRUCTURE.

TESTING PILES WITH THE PILE DRIVING ANALYZER (PDA) DURING DRIVING, RESTRIKING OR REDRIVING MAY BE REQUIRED. THE ENGINEER WILL DETERMINE THE NEED FOR PDA TESTING. FOR PDA TESTING, SEE SECTION 450 OF THE STANDARD SPECIFICATIONS.

IT HAS BEEN ESTIMATED THAT A HAMMER WITH AN EQUIVALENT RATED ENERGY IN THE RANGE OF 30 TO 35 FT.-KIPS PER BLOW WILL BE REQUIRED TO DRIVE PILES AT END BENT NO. 1. THIS ESTIMATED ENERGY RANGE DOES NOT RELEASE THE CONTRACTOR FROM PROVIDING EQUIPMENT IN ACCORDANCE WITH THE PILE PROVISION.

IT HAS BEEN ESTIMATED THAT A HAMMER WITH AN EQUIVALENT RATED ENERGY IN THE RANGE OF 40 TO 45 FT.-KIPS PER BLOW WILL BE REQUIRED TO DRIVE PILES AT END BENT NO. 2. THIS ESTIMATED ENERGY RANGE DOES NOT RELEASE THE CONTRACTOR FROM PROVIDING EQUIPMENT IN ACCORDANCE WITH THE PILE PROVISION.

IT HAS BEEN ESTIMATED THAT A HAMMER WITH AN EQUIVALENT RATED ENERGY IN THE RANGE OF 40 TO 45 FT.-KIPS PER BLOW WILL BE REQUIRED TO DRIVE PILES AT BENT NO. 1. THIS ESTIMATED ENERGY RANGE DOES NOT RELEASE THE CONTRACTOR FROM PROVIDING EQUIPMENT IN ACCORDANCE WITH THE PILE PROVISION.

PROJECT NO. 17BP.1.R.34

BERTIE COUNTY

STATION: 13+62.50 -L-

SHEET 2 OF 2 REPLACES BRIDGE NO. 54

STATE OF NORTH CAROLINA
DEPARTMENT OF TRANSPORTATION
RALEIGH

# GENERAL DRAWING
FOR BRIDGE ON SR 1511
OVER BLACK WALNUT SWAMP
BETWEEN NC 45
AND SR 1502

NORTH CAROLINA PROFESSIONAL SEAL 22072 ENGINEER JOHN ARTHUR DILWORTH 7-26-12

WETHERILL ENGINEERING
559 Jones Franklin Rd. Suite 164
Raleigh, N.C. 27606
Bus: 919 851 8077
Fax: 919 851 8107
License: F-0377

TRANSPORTATION PLANNING/DESIGN - BRIDGE/STRUCTURE DESIGN
CIVIL/SITE DESIGN - GIS/GPS - CONSTRUCTION OBSERVATION

| REVISIONS | | | | | | SHEET NO. |
|---|---|---|---|---|---|---|
| NO. | BY: | DATE: | NO. | BY: | DATE: | S-2 |
| 1 | | | 3 | | | TOTAL SHEETS |
| 2 | | | 4 | | | 16 |

DRAWN BY : J. PENDERGRAFT DATE : 6/12
CHECKED BY : J. DILWORTH DATE : 6/12

P:\2012\Bertie #54\Structures\DGN\BRIDGE 54_STR_TYP.dgn
7/26/2012 9:01:15 AM

# LOAD AND RESISTANCE FACTOR RATING (LRFD) SUMMARY FOR PRESTRESSED CONCRETE GIRDERS

| LEVEL | | VEHICLE | WEIGHT (W) (TONS) | CONTROLLING LOAD RATING | MINIMUM RATING FACTORS (RF) | TONS = W X RF | STRENGTH I LIMIT STATE | | | | | | | | | | | SERVICE III LIMIT STATE | | | | | | COMMENT NUMBER |
|---|---|---|---|---|---|---|---|---|---|---|---|---|---|---|---|---|---|---|---|---|---|---|---|---|
| | | | | | | | | MOMENT | | | | | SHEAR | | | | | | MOMENT | | | | | |
| | | | | | | | LIVELOAD FACTORS | DISTRIBUTION FACTORS (DF) | RATING FACTOR | SPAN | GIRDER LOCATION | DISTANCE FROM LEFT END OF SPAN (ft) | DISTRIBUTION FACTORS (DF) | RATING FACTOR | SPAN | GIRDER LOCATION | DISTANCE FROM LEFT END OF SPAN (ft) | LIVELOAD FACTORS | DISTRIBUTION FACTORS (DF) | RATING FACTOR | SPAN | GIRDER LOCATION | DISTANCE FROM LEFT END OF SPAN (ft) | |
| DESIGN LOAD RATING | | HL-93(Inv) | N/A | (1) | 1.018 | -- | 1.75 | 0.284 | 2.53 | 25' | EL | 12 | 0.591 | **1.02** | 25' | EL | **1.2** | 0.80 | 0.284 | 2.34 | 25' | EL | 12 | |
| | | HL-93(Opr) | N/A | -- | 1.319 | -- | 1.35 | 0.284 | 3.29 | 25' | EL | 12 | 0.591 | 1.32 | 25' | EL | 1.2 | N/A | -- | -- | -- | -- | -- | |
| | | HS-20(Inv) | 36.000 | (2) | 1.178 | 42.397 | 1.75 | 0.284 | 3.76 | 25' | EL | 12 | 0.591 | **1.18** | 25' | EL | **1.2** | 0.80 | 0.284 | 3.46 | 25' | EL | 12 | |
| | | HS-20(Opr) | 36.000 | -- | 1.527 | 54.959 | 1.35 | 0.284 | 4.87 | 25' | EL | 12 | 0.591 | 1.53 | 25' | EL | 1.2 | N/A | -- | -- | -- | -- | -- | |
| LEGAL LOAD RATING | SV | SNSH | 13.500 | -- | 2.728 | 36.833 | 1.4 | 0.284 | 6.83 | 25' | EL | 12 | 0.591 | 2.73 | 25' | EL | 1.2 | 0.80 | 0.284 | 5.04 | 25' | EL | 12 | |
| | | SNGARBS2 | 20.000 | -- | 2.186 | 43.718 | 1.4 | 0.284 | 6.39 | 25' | EL | 12 | 0.591 | 2.19 | 25' | EL | 1.2 | 0.80 | 0.284 | 4.72 | 25' | EL | 12 | |
| | | SNAGRIS2 | 22.000 | -- | 2.141 | 47.107 | 1.4 | 0.284 | 6.83 | 25' | EL | 12 | 0.591 | 2.14 | 25' | EL | 1.2 | 0.80 | 0.284 | 5.04 | 25' | EL | 12 | |
| | | SNCOTTS3 | 27.250 | -- | 1.385 | 37.731 | 1.4 | 0.284 | 3.57 | 25' | EL | 12 | 0.591 | 1.38 | 25' | EL | 1.2 | 0.80 | 0.284 | 2.64 | 25' | EL | 12 | |
| | | SNAGGRS4 | 34.925 | -- | 1.332 | 46.511 | 1.4 | 0.284 | 3.56 | 25' | EL | 12 | 0.591 | 1.33 | 25' | EL | 1.2 | 0.80 | 0.284 | 2.62 | 25' | EL | 12 | |
| | | SNS5A | 35.550 | -- | 1.392 | 49.477 | 1.4 | 0.284 | 3.45 | 25' | EL | 12 | 0.591 | 1.39 | 25' | EL | 1.2 | 0.80 | 0.284 | 2.54 | 25' | EL | 12 | |
| | | SNS6A | 39.950 | -- | 1.334 | 53.31 | 1.4 | 0.284 | 3.23 | 25' | EL | 12 | 0.591 | 1.33 | 25' | EL | 1.2 | 0.80 | 0.284 | 2.39 | 25' | EL | 12 | |
| | | SNS7B | 42.000 | -- | 1.344 | 56.455 | 1.4 | 0.284 | 3.23 | 25' | EL | 12 | 0.591 | 1.34 | 25' | EL | 1.2 | 0.80 | 0.284 | 2.37 | 25' | EL | 12 | |
| | TTST | TNAGRIT3 | 33.000 | -- | 1.634 | 53.934 | 1.4 | 0.284 | 4.55 | 25' | EL | 12 | 0.591 | 1.63 | 25' | EL | 1.2 | 0.80 | 0.284 | 3.36 | 25' | EL | 12 | |
| | | TNT4A | 33.075 | -- | 1.483 | 49.049 | 1.4 | 0.284 | 3.95 | 25' | EL | 12 | 0.591 | 1.48 | 25' | EL | 1.2 | 0.80 | 0.284 | 2.92 | 25' | EL | 12 | |
| | | TNT6A | 41.600 | -- | 1.398 | 58.138 | 1.4 | 0.284 | 3.71 | 25' | EL | 12 | 0.591 | 1.4 | 25' | EL | 1.2 | 0.80 | 0.284 | 2.74 | 25' | EL | 12 | |
| | | TNT7A | 42.000 | -- | 1.391 | 58.419 | 1.4 | 0.284 | 3.84 | 25' | EL | 12 | 0.591 | 1.39 | 25' | EL | 1.2 | 0.80 | 0.284 | 2.83 | 25' | EL | 12 | |
| | | TNT7B | 42.000 | -- | 1.343 | 56.385 | 1.4 | 0.284 | 3.46 | 25' | EL | 12 | 0.591 | 1.34 | 25' | EL | 1.2 | 0.80 | 0.284 | 2.55 | 25' | EL | 12 | |
| | | TNAGRIT4 | 43.000 | -- | 1.340 | 57.604 | 1.4 | 0.284 | 3.71 | 25' | EL | 12 | 0.591 | 1.34 | 25' | EL | 1.2 | 0.80 | 0.284 | 2.73 | 25' | EL | 12 | |
| | | TNAGT5A | 45.000 | -- | 1.367 | 61.501 | 1.4 | 0.284 | 3.71 | 25' | EL | 12 | 0.591 | 1.37 | 25' | EL | 1.2 | 0.80 | 0.284 | 2.73 | 25' | EL | 12 | |
| | | TNAGT5B | 45.000 | (3) | 1.239 | 55.766 | 1.4 | 0.284 | 3.65 | 25' | EL | 9.6 | 0.591 | **1.24** | 25' | EL | **1.2** | 0.80 | 0.284 | 2.71 | 25' | EL | 9.6 | |

## LOAD FACTORS:

| DESIGN LOAD RATING FACTORS | LIMIT STATE | $\gamma_{DC}$ | $\gamma_{DW}$ |
|---|---|---|---|
| | STRENGTH I | 1.25 | 1.50 |
| | SERVICE III | 1.00 | 1.00 |

## NOTES:

MINIMUM RATING FACTORS ARE BASED ON THE STRENGTH I AND SERVICE III LIMIT STATES.

ALLOWABLE STRESSES FOR SERVICE III LIMIT STATE ARE AS REQUIRED FOR DESIGN.

## COMMENTS:

1.
2.
3.
4.

(#) CONTROLLING LOAD RATING

(1) DESIGN LOAD RATING (HL-93)

(2) DESIGN LOAD RATING (HS-20)

(3) LEGAL LOAD RATING **

** SEE CHART FOR VEHICLE TYPE

GIRDER LOCATION

I - INTERIOR GIRDER
EL - EXTERIOR LEFT GIRDER
ER - EXTERIOR RIGHT GIRDER

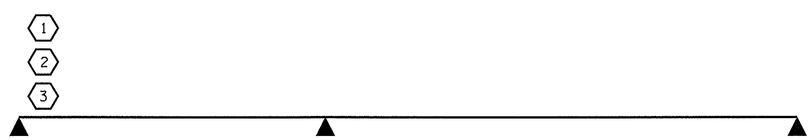


LRFR SUMMARY

FOR SPAN 'A'

PROJECT NO. 17BP.1.R.34

BERTIE COUNTY

STATION: 13+62.50 -L-

NORTH CAROLINA PROFESSIONAL SEAL 14045 ENGINEER TIMOTHY L. COGGINS

07/12/12

STATE OF NORTH CAROLINA
DEPARTMENT OF TRANSPORTATION
RALEIGH

STANDARD

LRFR SUMMARY FOR 25' CORED SLAB UNIT 90° SKEW

(NON-INTERSTATE TRAFFIC)

| REVISIONS | | | | | | SHEET NO. |
|---|---|---|---|---|---|---|
| NO. | BY: | DATE: | NO. | BY: | DATE: | S-3 |
| 1 | | | 3 | | | TOTAL SHEETS |
| 2 | | | 4 | | | 16 |

| | | |
|---|---|---|
| ASSEMBLED BY : | N. RUFFIN | DATE : 6/26/12 |
| CHECKED BY : | B.L. GREEN | DATE : 7/2/12 |
| DRAWN BY : CVC | 6/10 | |
| CHECKED BY : DNS | 6/10 | |

12-JUL-2012 11:34
S:\DPG1\Tlm\17BP.1.R.34\nruffin\17BP.1.R.34_sd_CS_01.dgn
tcoggins

STD. NO. 21LRFR1_90S_25L

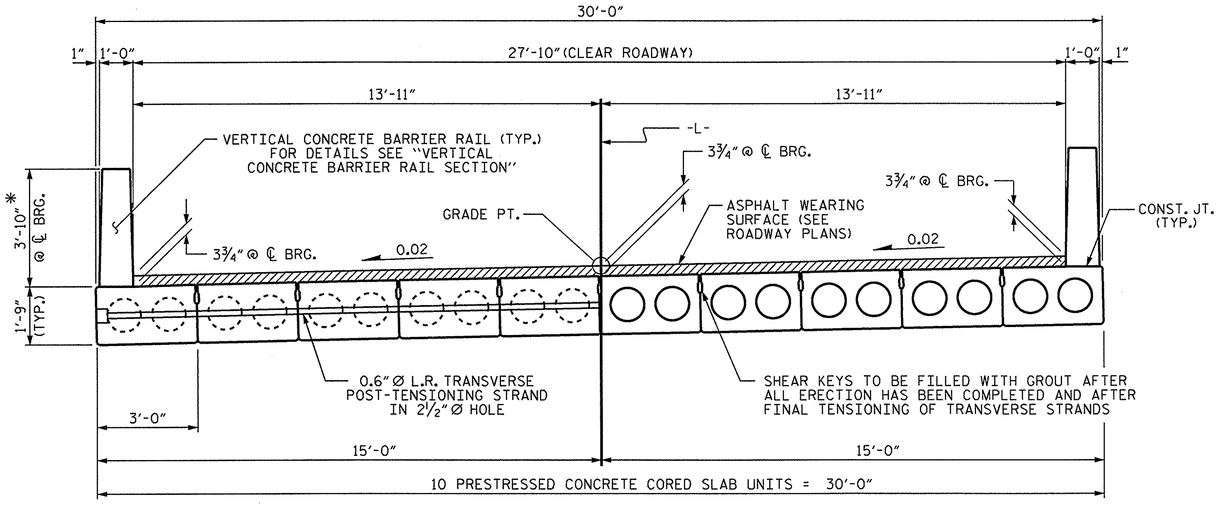


## TYPICAL SECTION

* - THE MAXIMUM BARRIER RAIL HEIGHT AND ASPHALT THICKNESS IS SHOWN. THE HEIGHT OF THE BARRIER RAIL AND ASPHALT THICKNESS VARIES WHILE THE TOP OF THE BARRIER RAIL FOLLOWS THE PROFILE OF THE GUTTERLINE. FOR RAIL HEIGHT DETAILS AND ASPHALT THICKNESS SEE THE "VERTICAL CONCRETE BARRIER RAIL SECTION" DETAIL.

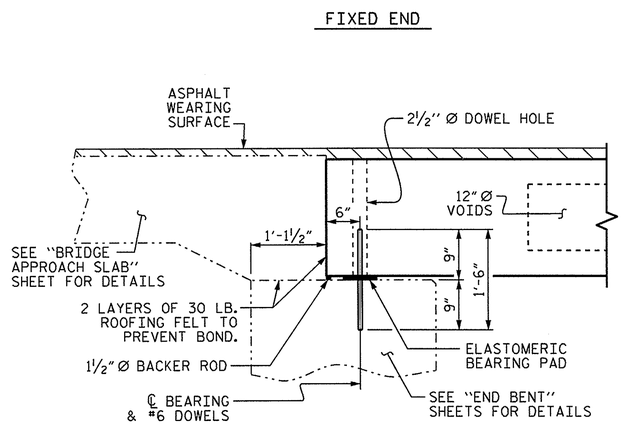


## SECTION AT END BENT

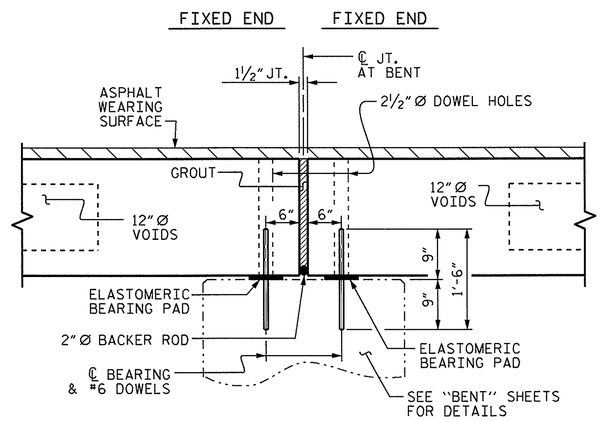


## SECTION AT BENT

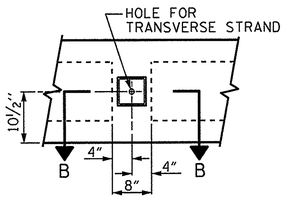


## ELEVATION VIEW

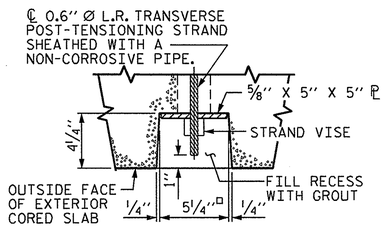


## SECTION B-B

## GROUTED RECESS AT END OF POST-TENSIONED STRAND OF CORED SLABS

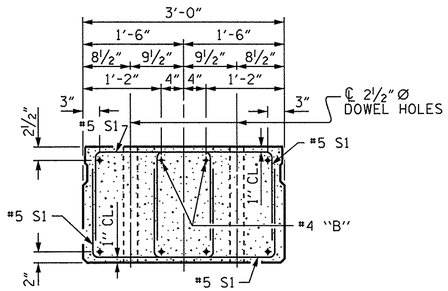


## END ELEVATION

SHOWING PLACEMENT OF DOUBLE STIRRUPS AND LOCATION OF DOWEL HOLES. (STRAND LAYOUT NOT SHOWN.) INTERIOR SLAB UNIT SHOWN-EXTERIOR SLAB UNIT SIMILAR EXCEPT SHEAR KEY LOCATION.

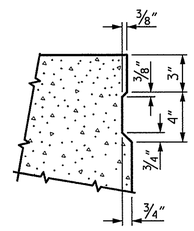


## SHEAR KEY DETAIL

NOTE: OMIT SHEAR KEY ON OUTSIDE FACE OF EXTERIOR CORED SLABS.

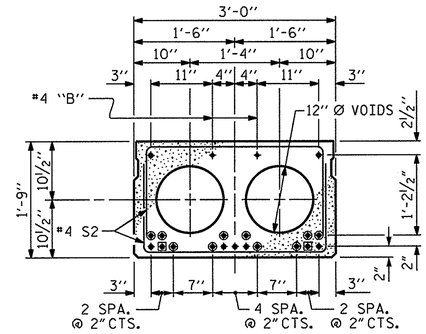


## INTERIOR SLAB SECTION (25' UNIT)

(9 STRANDS REQUIRED)

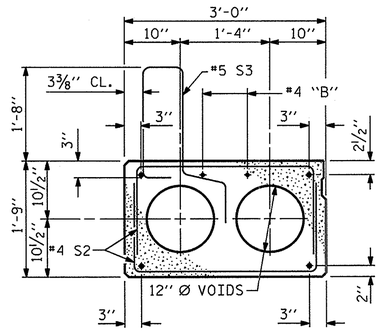


## EXT. SLAB SECTION

(FOR PRESTRESSED STRAND LAYOUT, SEE INTERIOR SLAB SECTION.)

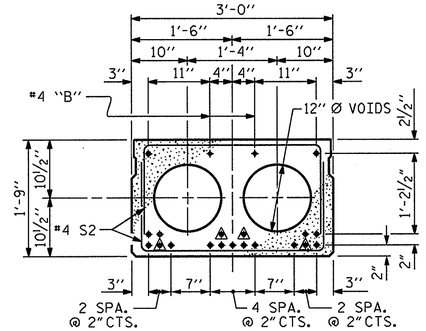


## INTERIOR SLAB SECTION (50' UNIT)

(19 STRANDS REQUIRED)

## 0.6" Ø LOW RELAXATION STRAND LAYOUT

▲ BOND SHALL BE BROKEN ON THESE STRANDS FOR A DISTANCE OF 6'-0" FROM END OF CORED SLAB UNIT. SEE STANDARD SPECIFICATIONS, ARTICLE 1078-7.

▣ BOND SHALL BE BROKEN ON THESE STRANDS FOR A DISTANCE OF 2'-0" FROM END OF CORED SLAB UNIT. SEE STANDARD SPECIFICATIONS, ARTICLE 1078-7.

◉ OPTIONAL FULL LENGTH DEBONDED STRANDS. THESE STRANDS ARE NOT REQUIRED. IF THE FABRICATOR CHOOSES TO INCLUDE THESE STRANDS IN THE CORED SLAB UNIT, THE STRANDS SHALL BE DEBONDED FOR THE FULL LENGTH OF THE UNIT AT NO ADDITIONAL COST. SEE STANDARD SPECIFICATIONS, ARTICLE 1078-7.

## DEBONDING LEGEND

PROJECT NO. 17BP.1.R.34
BERTIE COUNTY
STATION: 13+62.50 -L-

SHEET 1 OF 4

STATE OF NORTH CAROLINA
DEPARTMENT OF TRANSPORTATION
RALEIGH

STANDARD
3'-0" X 1'-9"
PRESTRESSED CONCRETE
CORED SLAB UNIT
90° SKEW

NORTH CAROLINA PROFESSIONAL SEAL 14045 ENGINEER TIMOTHY C. COGGINS
01/12/12

| REVISIONS | | | | | | SHEET NO. |
|---|---|---|---|---|---|---|
| NO. | BY: | DATE: | NO. | BY: | DATE: | S-4 |
| 1 | | | 3 | | | TOTAL SHEETS |
| 2 | | | 4 | | | 16 |

STD. NO. 21" PCS2_30_90S

| | | | |
|---|---|---|---|
| ASSEMBLED BY : N. RUFFIN | | DATE : 6/26/12 | |
| CHECKED BY : B.L. GREEN | | DATE : 7/2/12 | |
| DRAWN BY : DGE | 5/09 | REV. 12/11 | MAA/AAC |
| CHECKED BY : BCH | 6/09 | | |

12-JUL-2012 11:34
S:\DPG1\Tim\17BP.1.R.34\nruffin\17BP.1.R.34_sd_CS_01.dgn
tcoggins

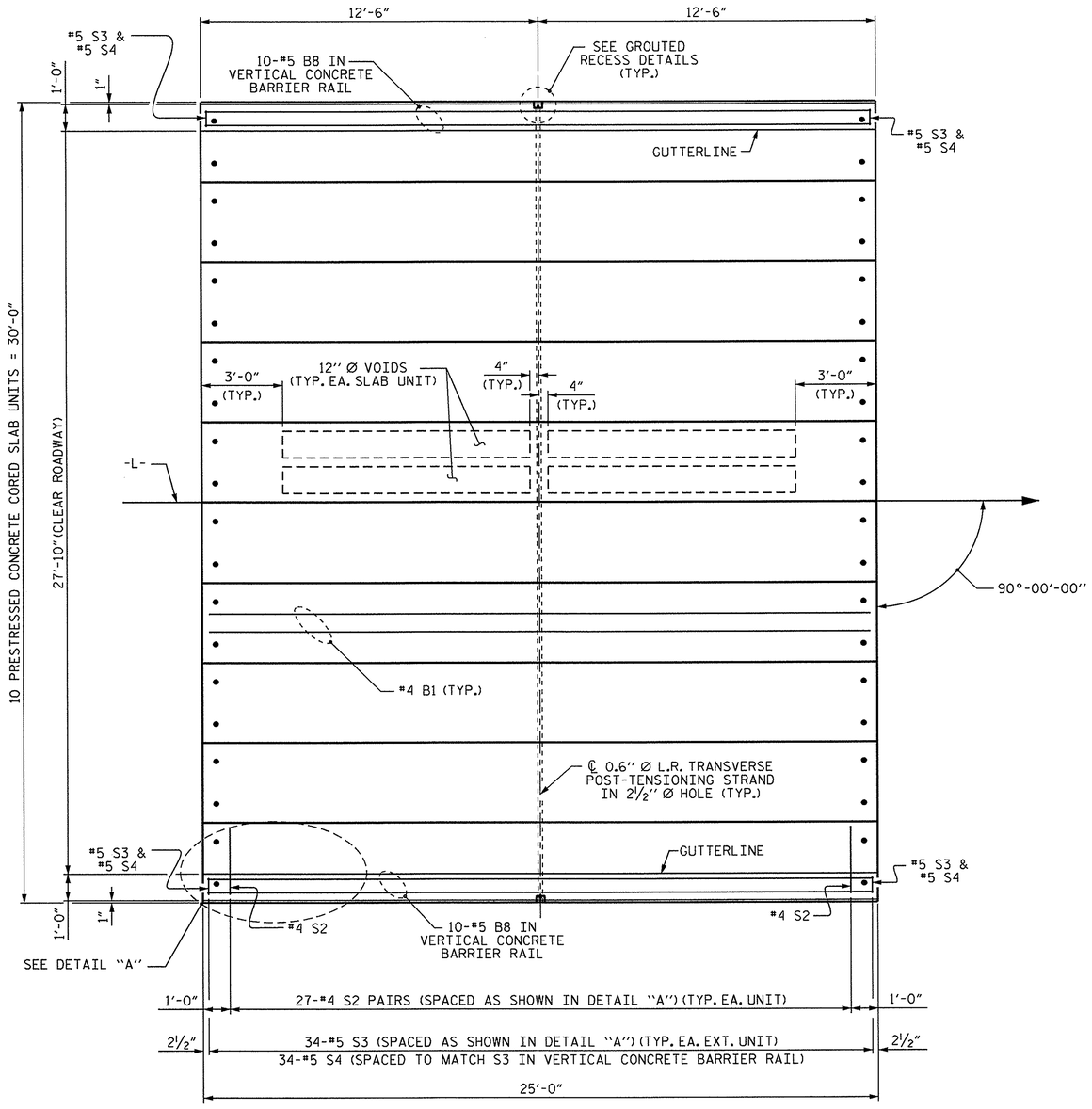


## PLAN OF UNIT

8" HORIZONTAL DECK DRAINS ARE TO BE INSTALLED AT 4'-0" CENTERS AT THE FOLLOWING LOCATIONS:
LT: STA. 13+31.00 -L- TO STA. 13+43.00 -L-
WHILE KEEPING A 5'-0" TO 6'-0" OFFSET FROM THE INTERIOR BENT (4 REQUIRED)

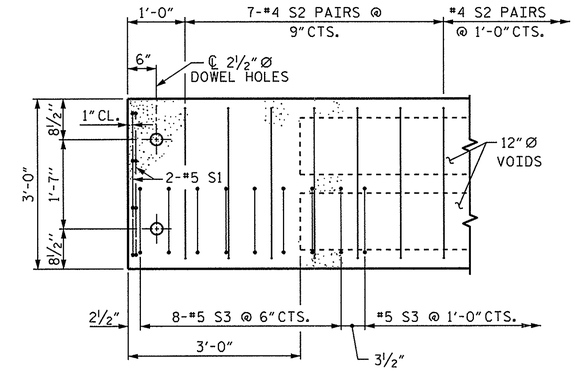


## DETAIL "A"

NOTE: EXTERIOR UNIT SHOWN - INTERIOR UNIT SIMILAR EXCEPT OMIT #5 S3 BARS.

PROJECT NO. 17BP.1.R.34
BERTIE COUNTY
STATION: 13+62.50 -L-

SHEET 2 OF 4

STATE OF NORTH CAROLINA
DEPARTMENT OF TRANSPORTATION
RALEIGH

# PLAN OF 25' UNIT 27'-10" CLEAR ROADWAY 90° SKEW

NORTH CAROLINA PROFESSIONAL SEAL 14045 ENGINEER TIMOTHY L. COGGINS
07/12/12

| REVISIONS | | | | | | | | SHEET NO. |
|---|---|---|---|---|---|---|---|---|
| NO. | BY: | DATE: | NO. | BY: | DATE: | | | S-5 |
| 1 | | | 3 | | | | | TOTAL SHEETS |
| 2 | | | 4 | | | | | 16 |

| | | | |
|---|---|---|---|
| ASSEMBLED BY : N. RUFFIN | | DATE : 6/26/12 | |
| CHECKED BY : B.L. GREEN | | DATE : 7/2/12 | |
| DRAWN BY : DGE 3/09 | REV. 12/5/11 MAA/AAC | | |
| CHECKED BY : BCH 3/09 | | | |

12-JUL-2012 11:34
S:\DPG1\Tim\17BP.1.R.34\nruffin\17BP.1.R.34_sd_CS_01.dgn
tcoggins

STD. NO. 21" PCS_30_90S_25L

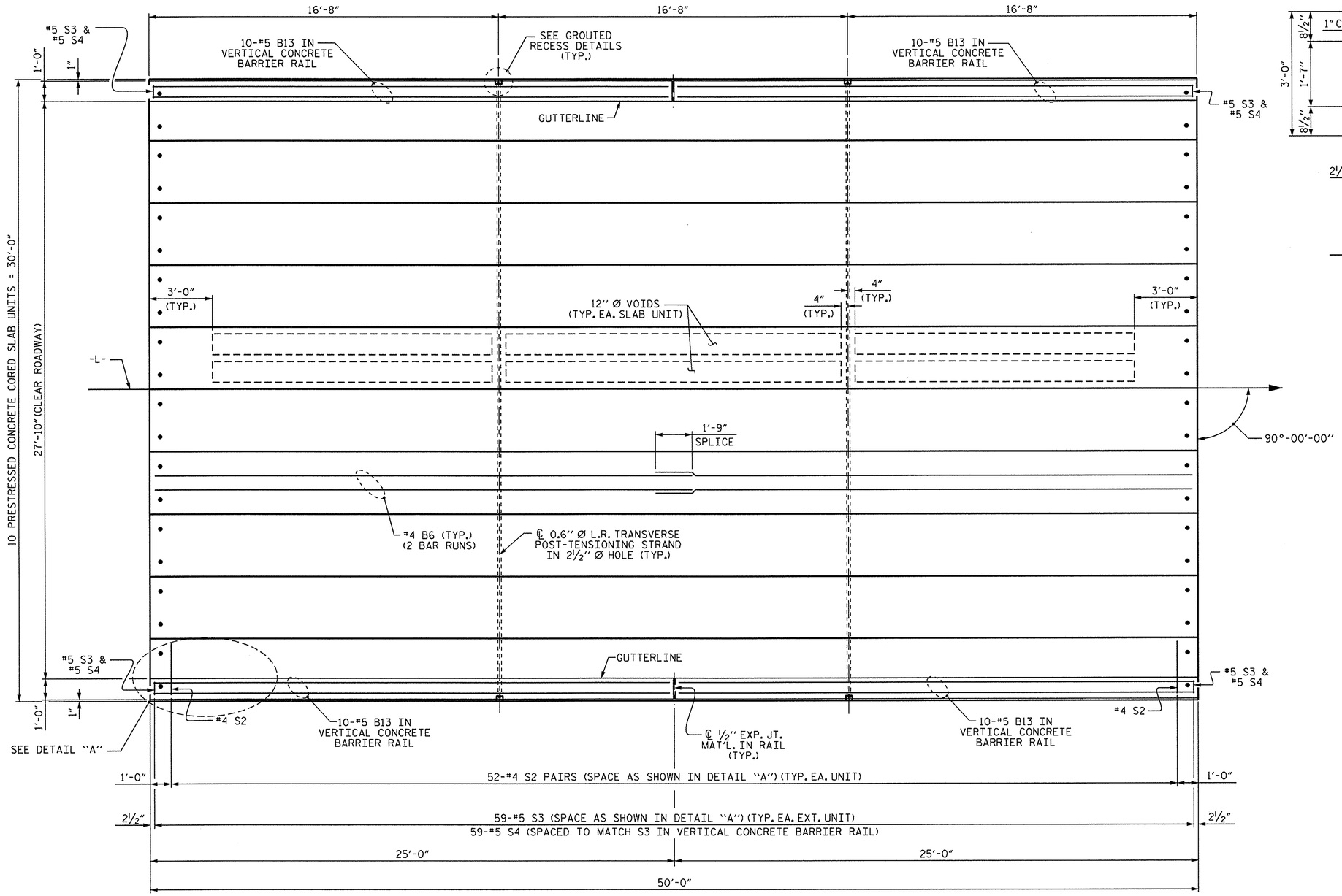


## PLAN OF UNIT

8" HORIZONTAL DECK DRAINS ARE TO BE INSTALLED AT 4'-0" CENTERS AT THE FOLLOWING LOCATIONS: LT: STA. 13+54.00 -L- TO STA. 13+95.00 -L- WHILE KEEPING A 5'-0" TO 6'-0" OFFSET FROM THE INTERIOR BENT (11 REQUIRED)

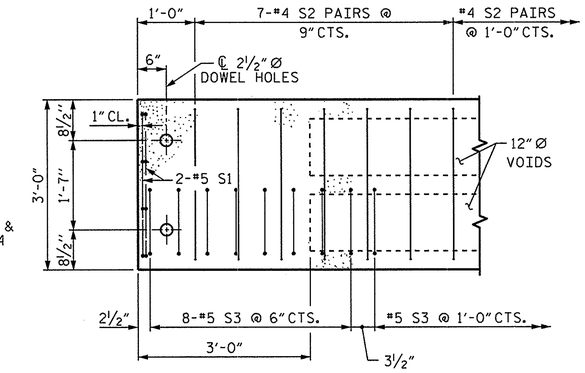


## DETAIL "A"

NOTE: EXTERIOR UNIT SHOWN - INTERIOR UNIT SIMILAR EXCEPT OMIT #5 S3 BARS.

PROJECT NO. 17BP.1.R.34
BERTIE COUNTY
STATION: 13+62.50 -L-

SHEET 3 OF 4

STATE OF NORTH CAROLINA
DEPARTMENT OF TRANSPORTATION
RALEIGH

PLAN OF 50' UNIT
27'-10" CLEAR ROADWAY
90° SKEW

NORTH CAROLINA PROFESSIONAL SEAL 14045 ENGINEER TIMOTHY L. COGGINS
Timothy L. Coggins 07/19/12

| REVISIONS | | | | | | SHEET NO. |
|---|---|---|---|---|---|---|
| NO. | BY: | DATE: | NO. | BY: | DATE: | S-6 |
| 1 | | | 3 | | | TOTAL SHEETS |
| 2 | | | 4 | | | 16 |

| | | | |
|---|---|---|---|
| ASSEMBLED BY : N. RUFFIN | | DATE : 6/26/12 | |
| CHECKED BY : B.L. GREEN | | DATE : 7/2/12 | |
| DRAWN BY : DGE | 3/09 | REV. 12/5/11 | MAA/AAC |
| CHECKED BY : BCH | 3/09 | | |

12-JUL-2012 11:34
S:\DPG1\Tim\17BP.1.R.34\nruffin\17BP.1.R.34_sd_CS_01.dgn
tcoggins

STD. NO. 21" PCS_30_90S_50L

| GRADE 270 STRANDS | |
|---|---|
| | 0.6" Ø L.R. |
| AREA (SQUARE INCHES) | 0.217 |
| ULTIMATE STRENGTH (LBS. PER STRAND) | 58,600 |
| APPLIED PRESTRESS (LBS. PER STRAND) | 43,950 |

| CORED SLABS REQUIRED | | | |
|---|---|---|---|
| | NUMBER | LENGTH | TOTAL LENGTH |
| 25' UNIT | | | |
| EXTERIOR C.S. | 2 | 25'-0" | 50'-0" |
| INTERIOR C.S. | 8 | 25'-0" | 200'-0" |
| TOTAL | 10 | | 250'-0" |

| CORED SLABS REQUIRED | | | |
|---|---|---|---|
| | NUMBER | LENGTH | TOTAL LENGTH |
| 50' UNIT | | | |
| EXTERIOR C.S. | 2 | 50'-0" | 100'-0" |
| INTERIOR C.S. | 8 | 50'-0" | 400'-0" |
| TOTAL | 10 | | 500'-0" |

| CONCRETE RELEASE STRENGTH | |
|---|---|
| UNIT | PSI |
| 25' UNITS | 4000 |
| 50' UNITS | 4900 |

## BILL OF MATERIAL FOR VERTICAL CONCRETE BARRIER RAIL

| BAR | BARS PER PAIR OF EXTERIOR UNITS | TOTAL NO. | SIZE | TYPE | LENGTH | WEIGHT |
|---|---|---|---|---|---|---|
| | 25' UNIT | | | | | |
| * B8 | 20 | 20 | #5 | STR | 24'-7" | 513 |
| * S4 | 68 | 68 | #5 | 2 | 7'-2" | 508 |
| * EPOXY COATED REINFORCING STEEL | | | | LBS. | | 1021 |
| CLASS AA CONCRETE | | | | CU.YDS. | | 6.6 |
| TOTAL VERTICAL CONCRETE BARRIER RAIL | | | | LN. FT. | | 50.125 |

## BILL OF MATERIAL FOR VERTICAL CONCRETE BARRIER RAIL

| BAR | BARS PER PAIR OF EXTERIOR UNITS | TOTAL NO. | SIZE | TYPE | LENGTH | WEIGHT |
|---|---|---|---|---|---|---|
| | 50' UNIT | | | | | |
| * B13 | 40 | 40 | #5 | STR | 24'-7" | 1026 |
| * S4 | 118 | 118 | #5 | 2 | 7'-2" | 882 |
| * EPOXY COATED REINFORCING STEEL | | | | LBS. | | 1908 |
| CLASS AA CONCRETE | | | | CU.YDS. | | 13.1 |
| TOTAL VERTICAL CONCRETE BARRIER RAIL | | | | LN. FT. | | 100.125 |

## DEAD LOAD DEFLECTION AND CAMBER

| | 3'-0" x 1'-9" |
|---|---|
| 25' CORED SLAB UNIT | 0.6" Ø L.R. STRAND |
| CAMBER (SLAB ALONE IN PLACE) | 1/2" ↑ |
| DEFLECTION DUE TO SUPERIMPOSED DEAD LOAD** | 1/8" ↓ |
| FINAL CAMBER | 3/8" ↑ |

** INCLUDES FUTURE WEARING SURFACE

## DEAD LOAD DEFLECTION AND CAMBER

| | 3'-0" x 1'-9" |
|---|---|
| 50' CORED SLAB UNIT | 0.6" Ø L.R. STRAND |
| CAMBER (SLAB ALONE IN PLACE) | 2 1/2" ↑ |
| DEFLECTION DUE TO SUPERIMPOSED DEAD LOAD** | 1/4" ↓ |
| FINAL CAMBER | 2 1/4" ↑ |

** INCLUDES FUTURE WEARING SURFACE

## BAR TYPES

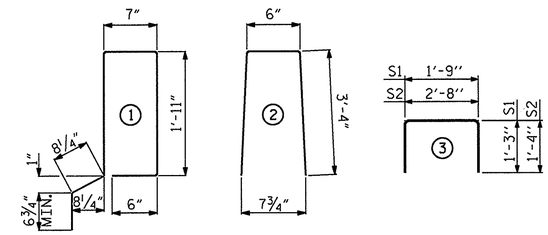


ALL BAR DIMENSIONS ARE OUT TO OUT

## BILL OF MATERIAL FOR ONE 25' CORED SLAB UNIT

| BAR | NUMBER | SIZE | TYPE | EXTERIOR UNIT LENGTH | EXTERIOR UNIT WEIGHT | INTERIOR UNIT LENGTH | INTERIOR UNIT WEIGHT |
|---|---|---|---|---|---|---|---|
| B1 | 2 | #4 | STR | 24'-8" | 33 | 24'-8" | 33 |
| S1 | 8 | #5 | 3 | 4'-3" | 35 | 4'-3" | 35 |
| S2 | 54 | #4 | 3 | 5'-4" | 192 | 5'-4" | 192 |
| * S3 | 34 | #5 | 1 | 6'-2" | 219 | | |
| REINFORCING STEEL | | | LBS. | | 260 | | 260 |
| * EPOXY COATED REINFORCING STEEL | | | LBS. | | 219 | | |
| 5000 P.S.I. CONCRETE | | | CU. YDS. | | 3.7 | | 3.7 |
| 0.6" Ø L.R. STRANDS | | | No. | | 9 | | 9 |

## BILL OF MATERIAL FOR ONE 50' CORED SLAB UNIT

| BAR | NUMBER | SIZE | TYPE | EXTERIOR UNIT LENGTH | EXTERIOR UNIT WEIGHT | INTERIOR UNIT LENGTH | INTERIOR UNIT WEIGHT |
|---|---|---|---|---|---|---|---|
| B6 | 4 | #4 | STR | 25'-9" | 69 | 25'-9" | 69 |
| S1 | 8 | #5 | 3 | 4'-3" | 35 | 4'-3" | 35 |
| S2 | 104 | #4 | 3 | 5'-4" | 371 | 5'-4" | 371 |
| * S3 | 59 | #5 | 1 | 6'-2" | 379 | | |
| REINFORCING STEEL | | | LBS. | | 475 | | 475 |
| * EPOXY COATED REINFORCING STEEL | | | LBS. | | 379 | | |
| 6500 P.S.I. CONCRETE | | | CU. YDS. | | 7.1 | | 7.1 |
| 0.6" Ø L.R. STRANDS | | | No. | | 19 | | 19 |

## NOTES

ALL PRESTRESSING STRANDS SHALL BE 7-WIRE LOW RELAXATION GRADE 270 STRANDS AND SHALL CONFORM TO AASHTO M203 EXCEPT FOR SAMPLING REQUIREMENTS WHICH SHALL BE IN ACCORDANCE WITH THE STANDARD SPECIFICATIONS.

ALL REINFORCING STEEL CAST WITH THE CORED SLAB SECTIONS SHALL BE GRADE 60 AND SHALL BE INCLUDED IN THE UNIT PRICE BID FOR PRESTRESSED CONCRETE CORED SLABS.

RECESSES FOR TRANSVERSE STRANDS SHALL BE GROUTED AFTER THE TENSIONING OF THE STRANDS.

THE 2 1/2" Ø DOWEL HOLES AT FIXED ENDS OF SLAB SECTIONS SHALL BE FILLED WITH NON-SHRINK GROUT.

THE BACKER RODS SHALL CONFORM TO THE REQUIREMENTS OF TYPE M BOND BREAKER. SEE SECTION 1028 OF THE STANDARD SPECIFICATIONS.

WHEN CORED SLABS ARE CAST, AN INTERNAL HOLD-DOWN SYSTEM SHALL BE EMPLOYED TO PREVENT VOIDS FROM RISING OR MOVING SIDEWAYS. AT LEAST SIX WEEKS PRIOR TO CASTING CORED SLABS, THE CONTRACTOR SHALL SUBMIT TO THE ENGINEER FOR REVIEW AND COMMENT, DETAILED DRAWINGS OF THE PROPOSED HOLD-DOWN SYSTEM. IN ADDITION TO STRUCTURAL DETAILS, LOCATION AND SPACING OF THE HOLD-DOWNS SHALL BE INDICATED.

ALL REINFORCING STEEL IN THE VERTICAL CONCRETE BARRIER RAIL SHALL BE EPOXY COATED.

PRESTRESSING STRANDS SHALL BE CUT FLUSH WITH THE CORED SLAB UNIT ENDS.

APPLY EPOXY PROTECTIVE COATING TO CORED SLAB UNIT ENDS.

GROOVED CONTRACTION JOINTS, 1/2" IN DEPTH, SHALL BE TOOLED IN ALL EXPOSED FACES OF THE BARRIER RAIL AND IN ACCORDANCE WITH ARTICLE 825-10(B) OF THE STANDARD SPECIFICATIONS. A CONTRACTION JOINT SHALL BE LOCATED AT EACH THIRD POINT BETWEEN BARRIER RAIL EXPANSION JOINTS. ONLY ONE CONTRACTION JOINT IS REQUIRED AT MIDPOINT OF BARRIER RAIL SEGMENTS LESS THAN 20 FEET IN LENGTH AND NO CONTRACTION JOINTS ARE REQUIRED FOR THOSE SEGMENTS LESS THAN 10 FEET IN LENGTH.

TRANSVERSE POST TENSIONING OF THE CORED SLAB UNITS SHALL BE DONE IN ACCORDANCE WITH THE STANDARD SPECIFICATIONS.

THE TRANSFER OF LOAD FROM THE ANCHORAGES TO THE CORED SLAB UNIT SHALL BE DONE WHEN THE CONCRETE HAS REACHED A COMPRESSIVE STRENGTH OF NOT LESS THAN THE REQUIRED STRENGTH SHOWN IN THE "CONCRETE RELEASE STRENGTH" TABLE.

FOR GROUT FOR STRUCTURES, SEE SPECIAL PROVISIONS.

PRESTRESSED CONCRETE CORED SLAB UNITS ARE DESIGNED FOR 0 PSI TENSION IN THE PRECOMPRESSED TENSILE ZONE UNDER ALL LOADING CONDITIONS.

PRESTRESSED CONCRETE CORED SLAB UNITS SHALL CONTAIN CALCIUM NITRITE CORROSION INHIBITOR IN ACCORDANCE WITH THE STANDARD SPECIFICATIONS.

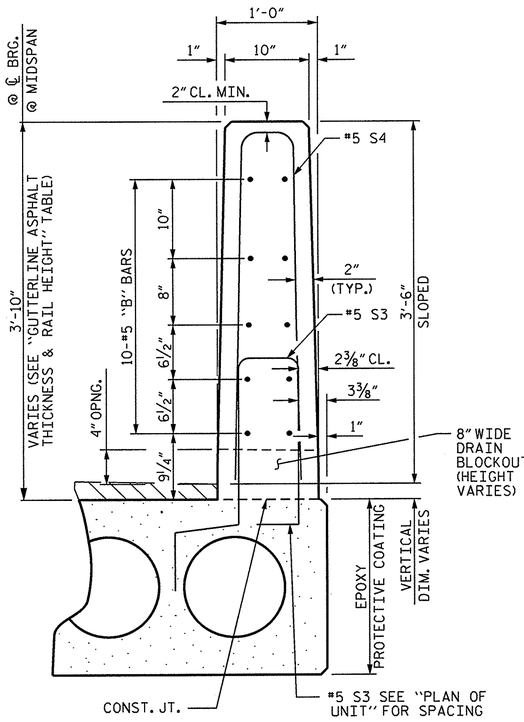


VERTICAL CONCRETE BARRIER RAIL SECTION

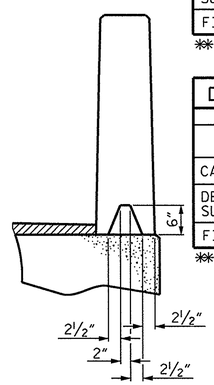


SECTION S-S
AT DAM IN OPEN JOINT
(THIS IS TO BE USED ONLY WHEN SLIP FORM IS USED)

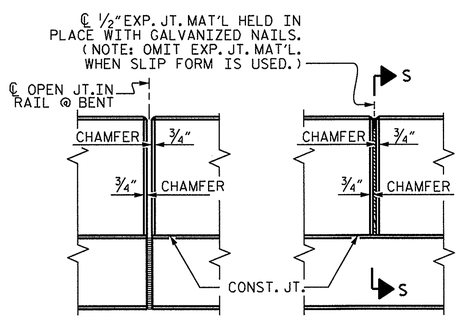


ELEVATION AT EXPANSION JOINTS

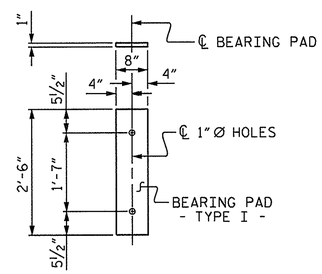


FIXED END
(TYPE I - 40 REQ'D)

ELASTOMERIC BEARING DETAILS

ELASTOMER IN ALL BEARINGS SHALL BE 50 DUROMETER HARDNESS.

| GUTTERLINE ASPHALT THICKNESS & RAIL HEIGHT | | |
|---|---|---|
| 27'-10" CLEAR ROADWAY | ASPHALT OVERLAY THICKNESS | RAIL HEIGHT |
| | @ MID-SPAN | @ MID-SPAN |
| | SUPERED SECTION | |
| 25' UNITS | 3 3/8" | 3'-9 5/8" |
| 50' UNITS | 1 1/2" | 3'-7 3/4" |

PROJECT NO. 17BP.1.R.34
BERTIE COUNTY
STATION: 13+62.50 -L-

SHEET 4 OF 4

STATE OF NORTH CAROLINA
DEPARTMENT OF TRANSPORTATION
RALEIGH

STANDARD
3'-0" X 1'-9"
PRESTRESSED CONCRETE
CORED SLAB UNIT
90° SKEW

NORTH CAROLINA PROFESSIONAL SEAL 14045 ENGINEER TIMOTHY W. COGGINS
Timothy W. Coggins 07/12/12

| | |
|---|---|
| ASSEMBLED BY : N. RUFFIN | DATE : 6/26/12 |
| CHECKED BY : B.L. GREEN | DATE : 7/2/12 |
| DRAWN BY : DGE 5/09 | REV. 12/11 MAA/AAC |
| CHECKED BY : BCH 6/09 | |

| REVISIONS | | | | | | | SHEET NO. |
|---|---|---|---|---|---|---|---|
| NO. | BY: | DATE: | NO. | BY: | DATE: | | S-7 |
| 1 | | | 3 | | | | TOTAL SHEETS |
| 2 | | | 4 | | | | 16 |

STD. NO. 21" PCS3_30_90S

12-JUL-2012 11:34
S:\DPG1\Tim\17BP.1.R.34\nruffin\17BP.1.R.34_sd_CS_01.dgn
tcoggins

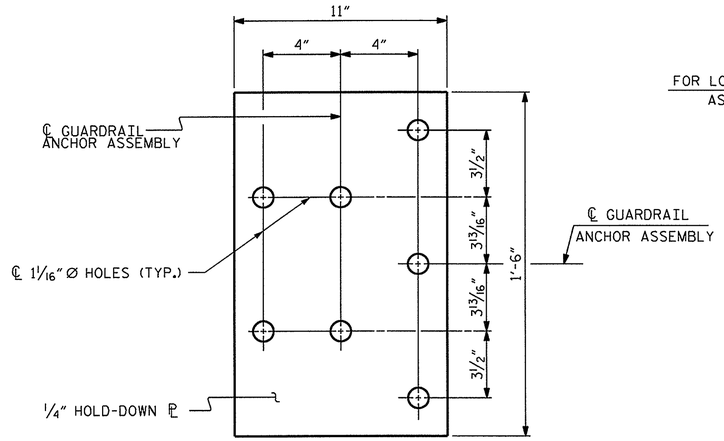


PLAN

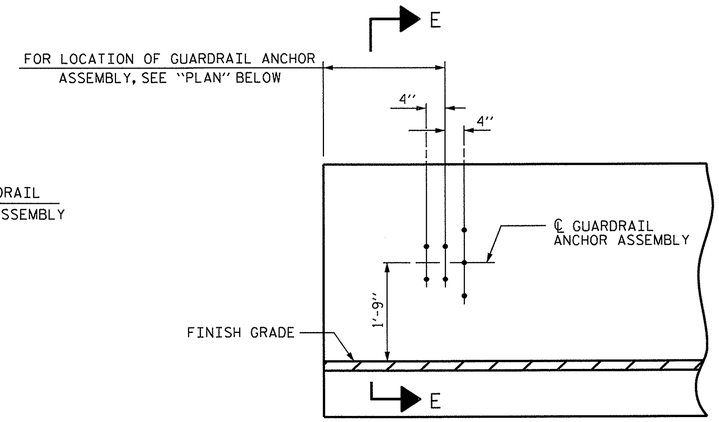


ELEVATION

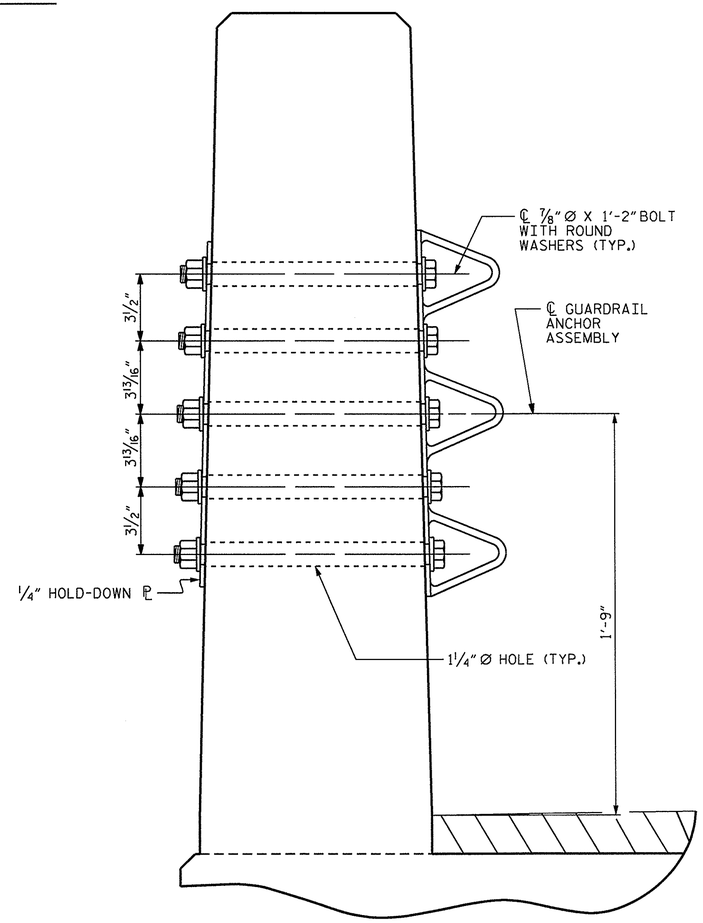


SECTION E-E

## GUARDRAIL ANCHOR ASSEMBLY DETAILS

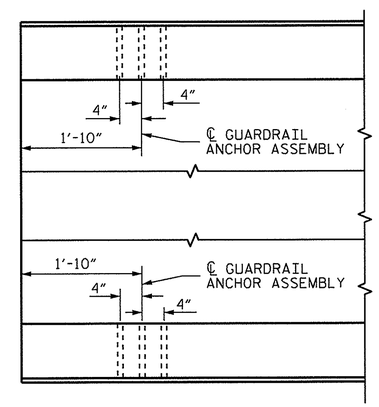


PLAN

## LOCATION OF ANCHORS FOR GUARDRAIL

END BENT #1 SHOWN, END BENT #2 SIMILAR.

## NOTES

THE GUARDRAIL ANCHOR ASSEMBLY SHALL CONSIST OF A 1/4" HOLD DOWN PLATE AND 7 - 7/8" Ø BOLTS WITH NUTS AND WASHERS.

THE HOLD-DOWN PLATE SHALL CONFORM TO AASHTO M270 GRADE 36. AFTER FABRICATION, THE HOLD-DOWN PLATE SHALL BE HOT-DIP GALVANIZED IN ACCORDANCE WITH AASHTO M111.

BOLTS SHALL CONFORM TO THE REQUIREMENTS OF ASTM A307 AND NUTS SHALL CONFORM TO THE REQUIREMENTS OF AASHTO M291. BOLTS, NUTS AND WASHERS SHALL BE GALVANIZED. (AT THE CONTRACTOR'S OPTION, STAINLESS STEEL BOLTS, NUTS AND WASHERS MAY BE USED AS AN ALTERNATE FOR THE 7/8" Ø GALVANIZED BOLTS, NUTS AND WASHERS. THEY SHALL CONFORM TO OR EXCEED THE MECHANICAL REQUIREMENTS OF ASTM A307. THE USE OF THIS ALTERNATE SHALL BE APPROVED BY THE ENGINEER.)

THE GUARDRAIL ANCHOR ASSEMBLY IS REQUIRED AT ALL POINTS WHERE APPROACH GUARDRAIL IS TO BE ATTACHED TO THE END OF BARRIER RAIL. FOR POINTS OF ATTACHMENT, SEE SKETCH.

AFTER INSTALLATION, THE EXPOSED THREAD OF THE BOLT SHALL BE BURRED WITH A SHARP POINTED TOOL.

THE COST OF THE GUARDRAIL ANCHOR ASSEMBLY SHALL BE INCLUDED IN THE UNIT CONTRACT PRICE BID FOR VERTICAL CONCRETE BARRIER RAIL.

THE VERTICAL REINFORCING BARS MAY BE SHIFTED SLIGHTLY IN THE VERTICAL CONCRETE BARRIER RAIL TO CLEAR ASSEMBLY BOLTS.

THE 1 1/4" Ø HOLES SHALL BE FORMED OR DRILLED WITH A CORE BIT. IMPACT TOOLS WILL NOT BE PERMITTED. ANY CONCRETE DAMAGED BY THIS WORK SHALL BE REPAIRED TO THE SATISFACTION OF THE ENGINEER.

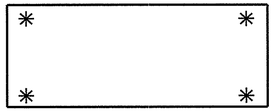

## SKETCH SHOWING POINTS OF ATTACHMENT

✳ DENOTES GUARDRAIL ANCHOR ASSEMBLY

PROJECT NO. 17BP.1.R.18

BERTIE COUNTY

STATION: 13+62.50 -L-

STATE OF NORTH CAROLINA
DEPARTMENT OF TRANSPORTATION
RALEIGH

STANDARD
GUARDRAIL ANCHORAGE FOR VERTICAL CONCRETE BARRIER RAIL

NORTH CAROLINA PROFESSIONAL SEAL 14045 ENGINEER TIMOTHY L. COGGINS
07/12/12

| REVISIONS | | | | | | SHEET NO. |
|---|---|---|---|---|---|---|
| NO. | BY: | DATE: | NO. | BY: | DATE: | S-8 |
| 1 | | | 3 | | | TOTAL SHEETS |
| 2 | | | 4 | | | 16 |

| | | | |
|---|---|---|---|
| ASSEMBLED BY : | N. RUFFIN | DATE : | 6/26/12 |
| CHECKED BY : | B.L. GREEN | DATE : | 7/2/12 |
| DRAWN BY : MAA 5/10 | ADDED 5/6/10 | | |
| CHECKED BY : GM 5/10 | REV. 10/1/11 | MAA/GM | |
| | REV. 12/5/11 | MAA/GM | |

12-JUL-2012 11:34
S:\DPG1\Tim\17BP.1.R.34\nruffin\17BP.1.R.34_sd_CS_01.dgn
tcoggins

(SHT 1) STD. NO. GRA3

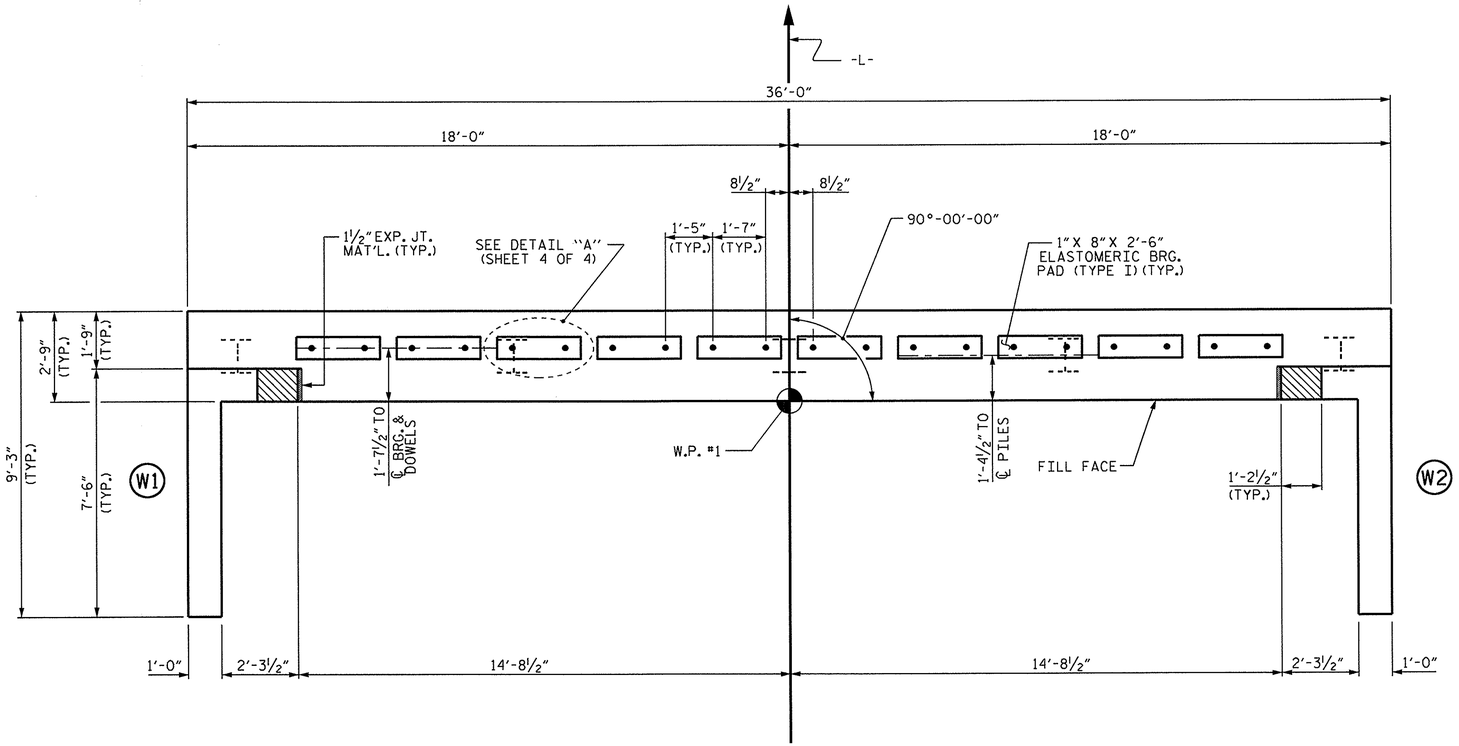


## PLAN

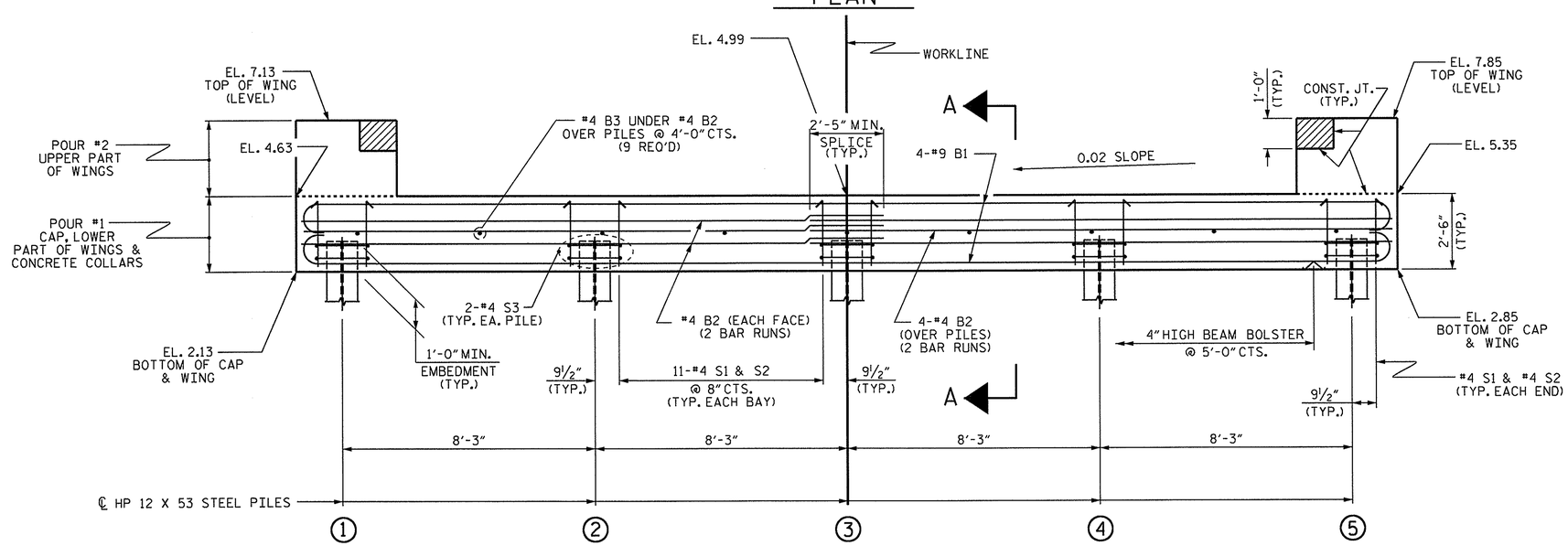


## ELEVATION

WINGS NOT SHOWN FOR CLARITY.
FOR SECTION A-A, SEE SHEET 4 OF 4.
CONCRETE COLLARS FOR STEEL PILES NOT SHOWN IN PLAN AND ELEVATION VIEWS FOR CLARITY.
SEE "CORROSION PROTECTION FOR STEEL PILES DETAIL", SHEET 4 OF 4.

## NOTES

STIRRUPS IN CAP MAY BE SHIFTED AS NECESSARY TO CLEAR DOWELS.

THE CONCRETE IN THE SHADED AREA OF THE WING SHALL BE POURED AFTER THE VERTICAL CONCRETE BARRIER RAIL IS CAST IF SLIP FORMING IS USED.

FOR PILE SPLICE DETAILS, SEE SHEET 4 OF 4.

FOR WING DETAILS, SEE SHEET 3 OF 4.

THE CONCRETE IN END BENT NO. 1 SHALL CONTAIN SILICA FUME. SILICA FUME SHALL BE SUBSTITUTED FOR 5% OF THE PORTLAND CEMENT BY WEIGHT. IF THE OPTION OF ARTICLE 1024-1 OF THE STANDARD SPECIFICATIONS TO PARTIALLY SUBSTITUTE CLASS F FLY ASH FOR PORTLAND CEMENT IS EXERCISED, THEN THE RATE OF FLY ASH SUBSTITUTION SHALL BE REDUCED TO 1.0 LB OF FLY ASH PER 1.0 LB. NO PAYMENT WILL BE MADE FOR THIS SUBSTITUTION AS IT IS CONSIDERED INCIDENTAL TO THE VARIOUS PAY ITEMS.

INSTALL THE 4" DIA. DRAIN PIPE THROUGH THE WING WALL AS REQUIRED FOR REINFORCED BRIDGE APPROACH FILLS, SEE THE ROADWAY PLANS. REINFORCING STEEL IN THE WING WALL MAY BE SHIFTED AS NECESSARY TO CLEAR THE DRAIN PIPE.

| TOP OF PILE ELEVATIONS | |
|---|---|
| 1 | 3.17 |
| 2 | 3.33 |
| 3 | 3.50 |
| 4 | 3.66 |
| 5 | 3.83 |

PROJECT NO. 17BP.1.R.34
BERTIE COUNTY
STATION: 13+62.50 -L-

SHEET 1 OF 4

STATE OF NORTH CAROLINA
DEPARTMENT OF TRANSPORTATION
RALEIGH

SUBSTRUCTURE

END BENT No. 1

NORTH CAROLINA PROFESSIONAL SEAL 14045 ENGINEER TIMOTHY W. COGGINS
Timothy W. Coggins 07/12/12

| REVISIONS | | | | | | SHEET NO. |
|---|---|---|---|---|---|---|
| NO. | BY: | DATE: | NO. | BY: | DATE: | S-9 |
| 1 | | | 3 | | | TOTAL SHEETS |
| 2 | | | 4 | | | 16 |

| | | | |
|---|---|---|---|
| ASSEMBLED BY : | N. RUFFIN | DATE : | 6/26/12 |
| CHECKED BY : | B.L. GREEN | DATE : | 7/2/12 |
| DRAWN BY : DGE | 02/10 | | |
| CHECKED BY : MKT | 02/10 | | |

12-JUL-2012 11:34
S:\DPG1\Tim\17BP.1.R.34\nruffin\17BP.1.R.34_sd_CS_01.dgn
tcoggins

STD. NO. EB_30_90S

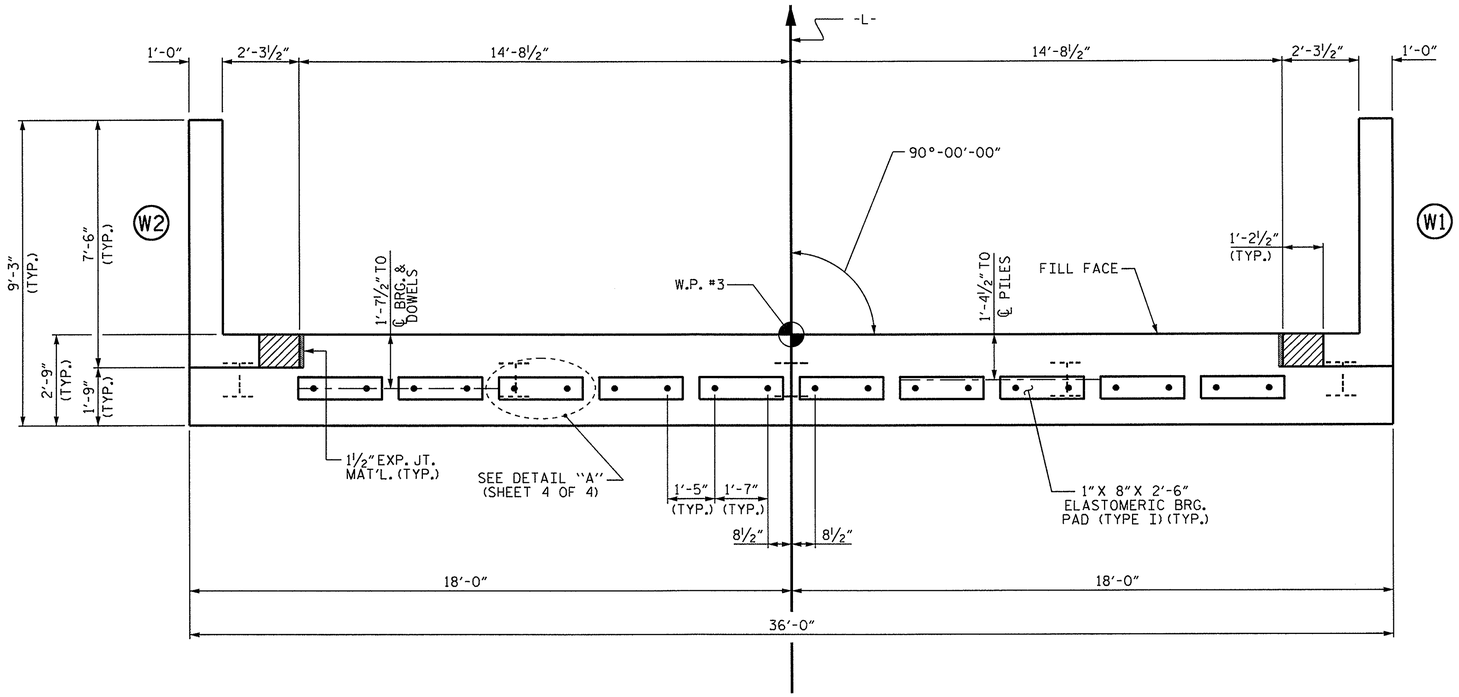


## PLAN

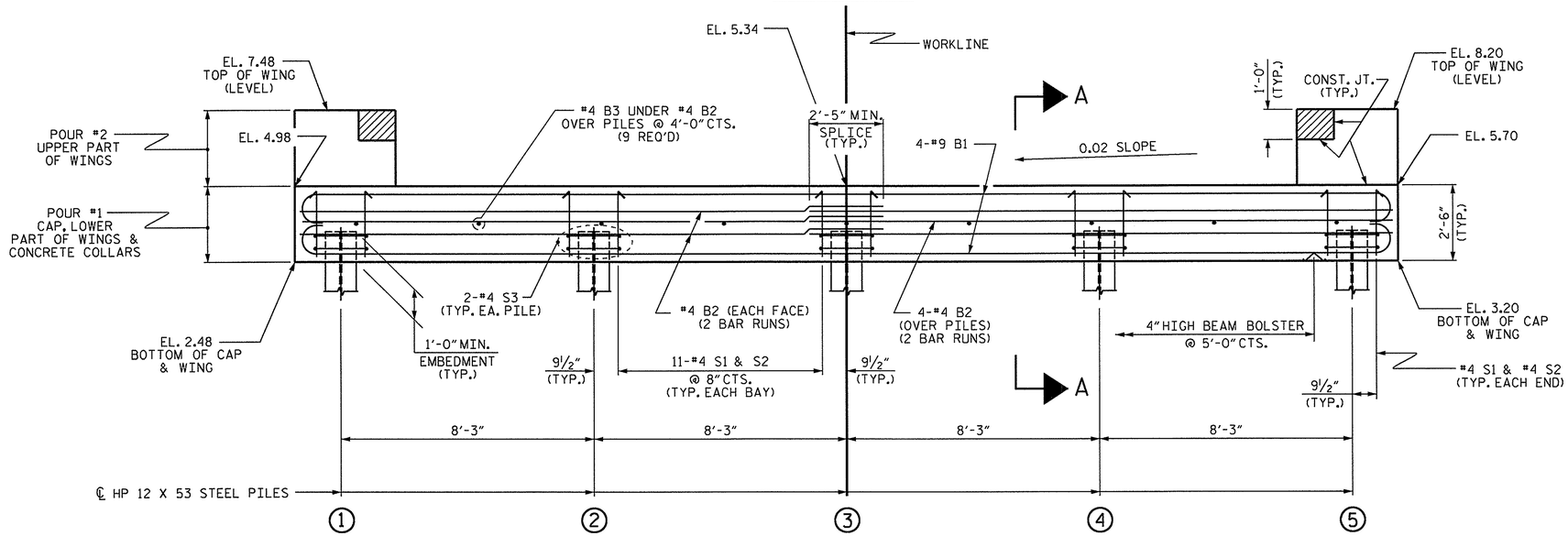


## ELEVATION

WINGS NOT SHOWN FOR CLARITY.
FOR SECTION A-A, SEE SHEET 4 OF 4.
CONCRETE COLLARS FOR STEEL PILES NOT SHOWN IN PLAN AND ELEVATION VIEWS FOR CLARITY.
SEE "CORROSION PROTECTION FOR STEEL PILES DETAIL", SHEET 4 OF 4.

## NOTES

STIRRUPS IN CAP MAY BE SHIFTED AS NECESSARY TO CLEAR DOWELS.

THE CONCRETE IN THE SHADED AREA OF THE WING SHALL BE POURED AFTER THE VERTICAL CONCRETE BARRIER RAIL IS CAST IF SLIP FORMING IS USED.

FOR PILE SPLICE DETAILS, SEE SHEET 4 OF 4.

FOR WING DETAILS, SEE SHEET 3 OF 4.

THE CONCRETE IN END BENT NO. 2 SHALL CONTAIN SILICA FUME. SILICA FUME SHALL BE SUBSTITUTED FOR 5% OF THE PORTLAND CEMENT BY WEIGHT. IF THE OPTION OF ARTICLE 1024-1 OF THE STANDARD SPECIFICATIONS TO PARTIALLY SUBSTITUTE CLASS F FLY ASH FOR PORTLAND CEMENT IS EXERCISED, THEN THE RATE OF FLY ASH SUBSTITUTION SHALL BE REDUCED TO 1.0 LB OF FLY ASH PER 1.0 LB. NO PAYMENT WILL BE MADE FOR THIS SUBSTITUTION AS IT IS CONSIDERED INCIDENTAL TO THE VARIOUS PAY ITEMS.

INSTALL THE 4" DIA. DRAIN PIPE THROUGH THE WING WALL AS REQUIRED FOR REINFORCED BRIDGE APPROACH FILLS. SEE THE ROADWAY PLANS. REINFORCING STEEL IN THE WING WALL MAY BE SHIFTED AS NECESSARY TO CLEAR THE DRAIN PIPE.

| TOP OF PILE ELEVATIONS | |
|---|---|
| 1 | 3.52 |
| 2 | 3.68 |
| 3 | 3.85 |
| 4 | 4.01 |
| 5 | 4.18 |

PROJECT NO. 17BP.1.R.34
BERTIE COUNTY
STATION: 13+62.50 -L-

SHEET 2 OF 4

STATE OF NORTH CAROLINA
DEPARTMENT OF TRANSPORTATION
RALEIGH

SUBSTRUCTURE

END BENT No. 2

NORTH CAROLINA PROFESSIONAL SEAL 14045 ENGINEER TIMOTHY W. COGGINS
Timothy W. Coggins 07/19/12

| | | | |
|---|---|---|---|
| ASSEMBLED BY : | N. RUFFIN | DATE : 6/26/12 | |
| CHECKED BY : | B.L. GREEN | DATE : 7/2/12 | |
| DRAWN BY : DGE | 02/10 | | |
| CHECKED BY : MKT | 02/10 | | |

| REVISIONS | | | | | | SHEET NO. |
|---|---|---|---|---|---|---|
| NO. | BY: | DATE: | NO. | BY: | DATE: | S-10 |
| 1 | | | 3 | | | TOTAL SHEETS |
| 2 | | | 4 | | | 16 |

12-JUL-2012 11:34
S:\DPG1\Tim\17BP.1.R.34\nruffin\17BP.1.R.34_sd_CS_01.dgn
tcoggins

STD. NO. EB_30_90S

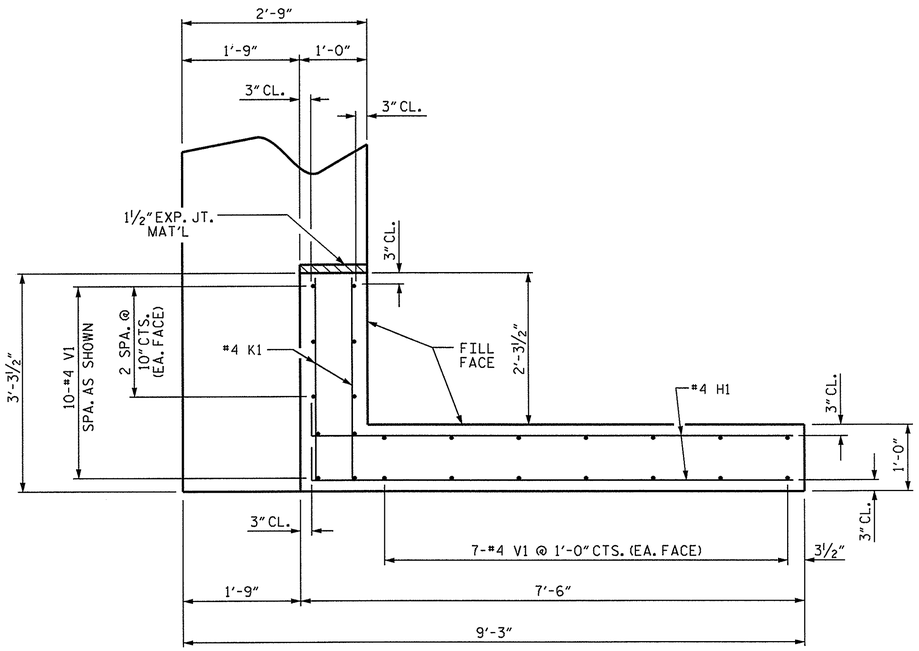


PLAN OF WING (W1)

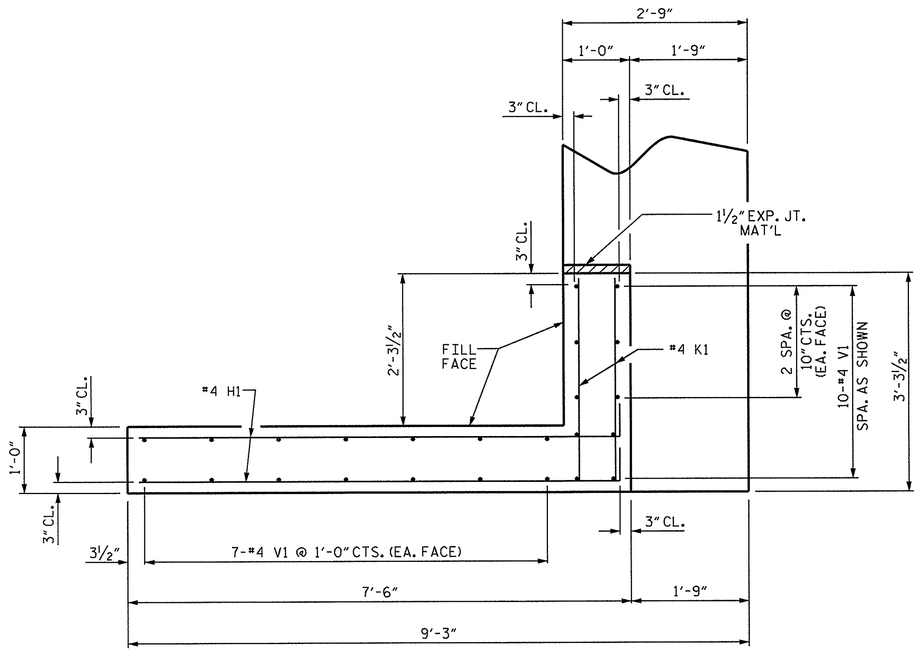


PLAN OF WING (W2)

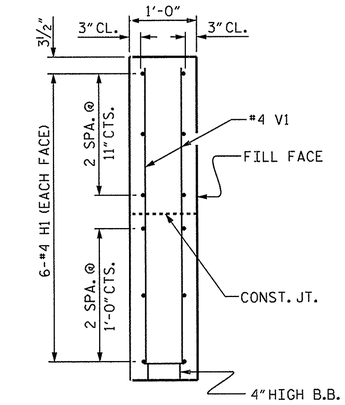


SECTION X-X

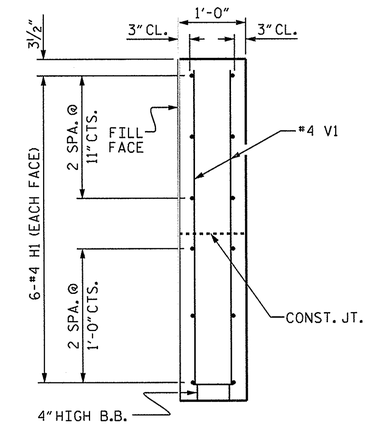


SECTION Y-Y

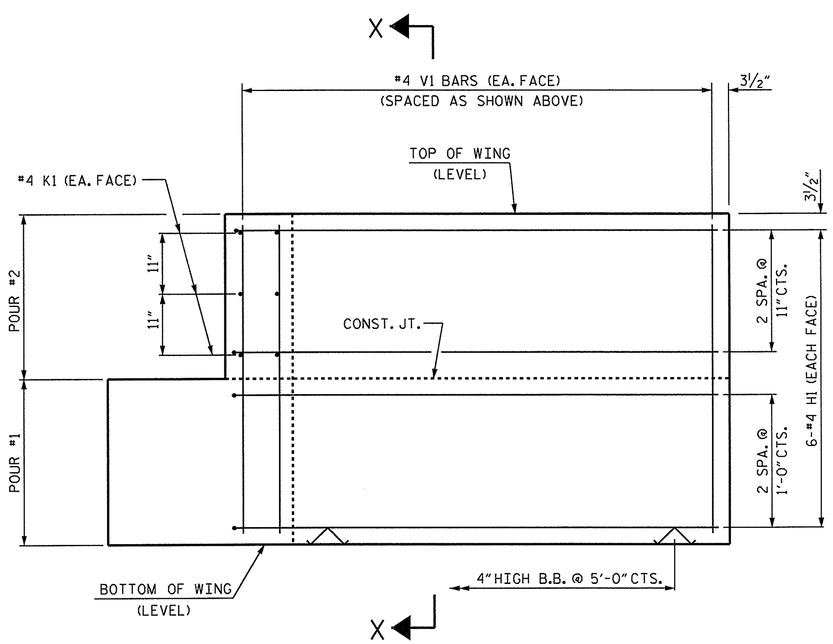


ELEVATION OF WING (W1)

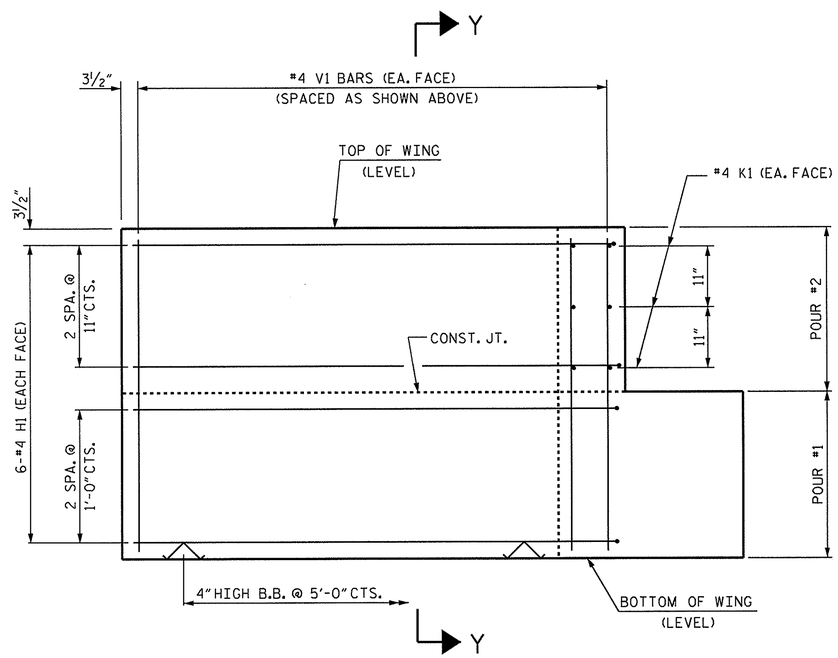


ELEVATION OF WING (W2)

WING DETAILS

PROJECT NO. 17BP.1.R.34

BERTIE COUNTY

STATION: 13+62.50 -L-

SHEET 3 OF 4

STATE OF NORTH CAROLINA
DEPARTMENT OF TRANSPORTATION
RALEIGH

SUBSTRUCTURE

END BENT
WING DETAILS

NORTH CAROLINA PROFESSIONAL SEAL 14045 ENGINEER TIMOTHY L. COGGINS
07/12/12

| REVISIONS | | | | | | SHEET NO. |
|---|---|---|---|---|---|---|
| NO. | BY: | DATE: | NO. | BY: | DATE: | S-11 |
| 1 | | | 3 | | | TOTAL SHEETS |
| 2 | | | 4 | | | 16 |

| | | | |
|---|---|---|---|
| ASSEMBLED BY : | N. RUFFIN | DATE : | 6/26/12 |
| CHECKED BY : | B.L. GREEN | DATE : | 7/2/12 |
| DRAWN BY : | DGE | 02/10 | |
| CHECKED BY : | MKT | 02/10 | |

12-JUL-2012 11:34
S:\DPG1\Tlm\17BP.1.R.34\nruffin\17BP.1.R.34_sd_CS_01.dgn
tcoggins

STD. NO. EB_30_90S

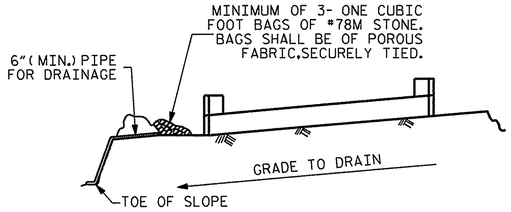


BAGGED STONE AND PIPE SHALL BE PLACED IMMEDIATELY AFTER COMPLETION OF END BENT EXCAVATION. PIPE MAY BE EITHER CONCRETE, CORRUGATED STEEL, CORRUGATED ALUMINUM ALLOY, OR CORRUGATED PLASTIC. PERFORATED PIPE WILL NOT BE ALLOWED.

BAGGED STONE SHALL REMAIN IN PLACE UNTIL THE ENGINEER DIRECTS THAT IT BE REMOVED. THE CONTRACTOR SHALL REMOVE AND DISPOSE OF SILT ACCUMULATIONS AT BAGGED STONE WHEN SO DIRECTED BY THE ENGINEER. BAGS SHALL BE REMOVED AND REPLACED WHENEVER THE ENGINEER DETERMINES THAT THEY HAVE DETERIORATED AND LOST THEIR EFFECTIVENESS.

NO SEPARATE PAYMENT WILL BE MADE FOR THIS WORK AND THE ENTIRE COST OF THIS WORK SHALL BE INCLUDED IN THE UNIT CONTRACT PRICE BID FOR THE SEVERAL PAY ITEMS.

## TEMPORARY DRAINAGE AT END BENT

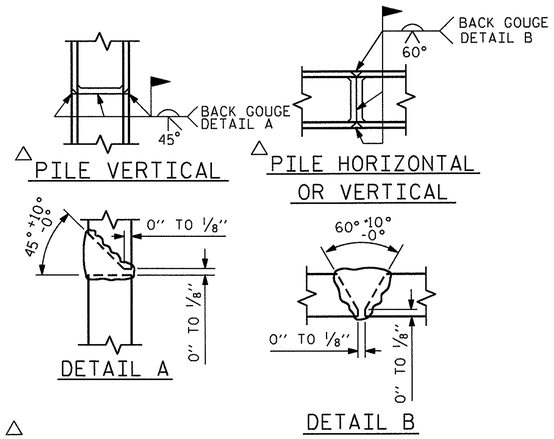


△ POSITION OF PILE DURING WELDING.

## PILE SPLICE DETAILS

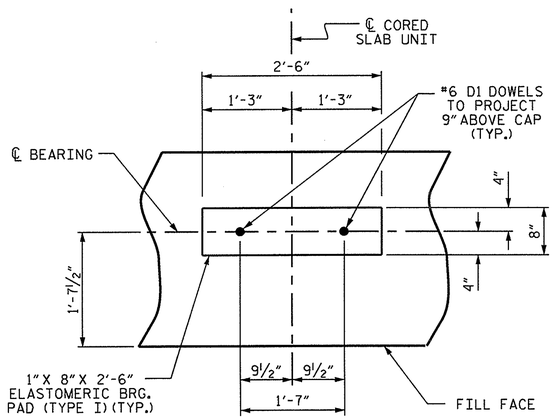


## DETAIL "A"

(END BENT No. 1 SHOWN, END BENT No. 2 SIMILAR BY ROTATION)

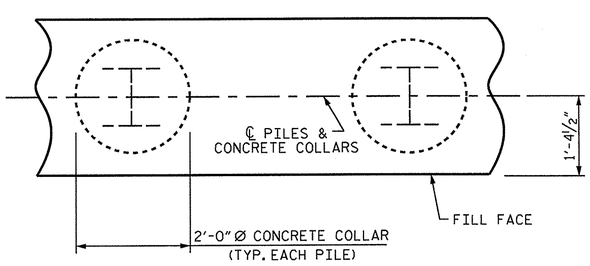


PLAN

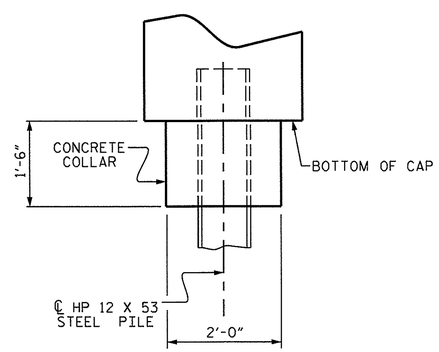


ELEVATION

## CORROSION PROTECTION FOR STEEL PILES DETAIL

(END BENT No. 1 SHOWN, END BENT No. 2 SIMILAR BY ROTATION)

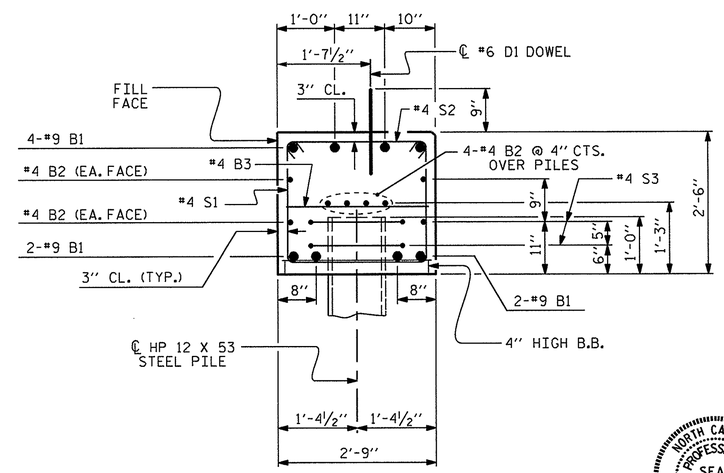


## SECTION A-A

(CONCRETE COLLAR NOT SHOWN FOR CLARITY. SEE "CORROSION PROTECTION FOR STEEL PILES DETAIL.")

NORTH CAROLINA PROFESSIONAL SEAL 14045 ENGINEER TIMOTHY L. COGGINS

Timothy L. Coggins 07/12/12

## BAR TYPES

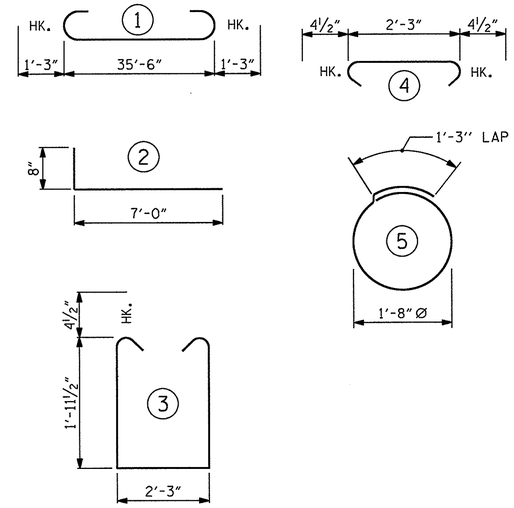


ALL BAR DIMENSIONS ARE OUT TO OUT.

| END BENT No. 1 | | END BENT No. 2 | |
|---|---|---|---|
| HP 12 X 53 STEEL PILES | | HP 12 X 53 STEEL PILES | |
| NO: 5 | LIN. FT.= 275 | NO: 5 | LIN. FT.= 360 |
| PILE REDRIVES | EA. 2 | PILE REDRIVES | EA. 2 |

## BILL OF MATERIAL FOR ONE END BENT

| BAR | NO. | SIZE | TYPE | LENGTH | WEIGHT |
|---|---|---|---|---|---|
| * B1 | 8 | #9 | 1 | 38'-0" | 1034 |
| * B2 | 16 | #4 | STR | 19'-1" | 204 |
| * B3 | 9 | #4 | STR | 2'-3" | 14 |
| * D1 | 20 | #6 | STR | 1'-6" | 45 |
| * H1 | 24 | #4 | 2 | 7'-8" | 123 |
| * K1 | 12 | #4 | STR | 2'-9" | 22 |
| * S1 | 46 | #4 | 3 | 6'-11" | 213 |
| * S2 | 46 | #4 | 4 | 3'-0" | 92 |
| * S3 | 10 | #4 | 5 | 6'-6" | 43 |
| * V1 | 48 | #4 | STR | 4'-5" | 142 |

* EPOXY COATED REINFORCING STEEL (FOR ONE END BENT) 1932 LBS.

CLASS AA CONCRETE BREAKDOWN (FOR ONE END BENT)

| | | |
|---|---|---|
| POUR #1 | CAP, LOWER PART OF WINGS & COLLARS | 11.2 C.Y. |
| POUR #2 | UPPER PART OF WINGS | 1.8 C.Y. |
| TOTAL CLASS AA CONCRETE | | 13.0 C.Y. |

PROJECT NO. 17BP.1.R.34

BERTIE COUNTY

STATION: 13+62.50 -L-

SHEET 4 OF 4

STATE OF NORTH CAROLINA
DEPARTMENT OF TRANSPORTATION
RALEIGH

SUBSTRUCTURE

END BENT No. 1 & 2 DETAILS

| REVISIONS | | | | | | SHEET NO. |
|---|---|---|---|---|---|---|
| NO. | BY: | DATE: | NO. | BY: | DATE: | S-12 |
| 1 | | | 3 | | | TOTAL SHEETS |
| 2 | | | 4 | | | 16 |

| | | | |
|---|---|---|---|
| ASSEMBLED BY : N. RUFFIN | | DATE : 6/26/12 | |
| CHECKED BY : B.L. GREEN | | DATE : 7/2/12 | |
| DRAWN BY : DGE | 02/10 | | |
| CHECKED BY : MKT | 02/10 | | |

12-JUL-2012 11:34
S:\DPG1\Tim\17BP.1.R.34\nruffin\17BP.1.R.34_sd_CS_01.dgn
tcoggins

STD. NO. EB_30_90S

## NOTES

STIRRUPS IN CAP MAY BE SHIFTED AS NECESSARY TO CLEAR DOWELS.

★ INVERT ALTERNATE STIRRUPS.

GALVANIZE THE TOP OF EACH INTERIOR BENT PILE A MINIMUM OF 23 FEET. GALVANIZE IN ACCORDANCE WITH SECTION 1076 OF THE STANDARD SPECIFICATIONS.

THE CONCRETE IN BENT NO. 1 SHALL CONTAIN SILICA FUME. SILICA FUME SHALL BE SUBSTITUTED FOR 5% OF THE PORTLAND CEMENT BY WEIGHT. IF THE OPTION OF ARTICLE 1024-1 OF THE STANDARD SPECIFICATIONS TO PARTIALLY SUBSTITUTE CLASS F FLY ASH FOR PORTLAND CEMENT IS EXERCISED, THEN THE RATE OF FLY ASH SUBSTITUTION SHALL BE REDUCED TO 1.0 LB OF FLY ASH PER 1.0 LB. NO PAYMENT WILL BE MADE FOR THIS SUBSTITUTION AS IT IS CONSIDERED INCIDENTAL TO THE VARIOUS PAY ITEMS.

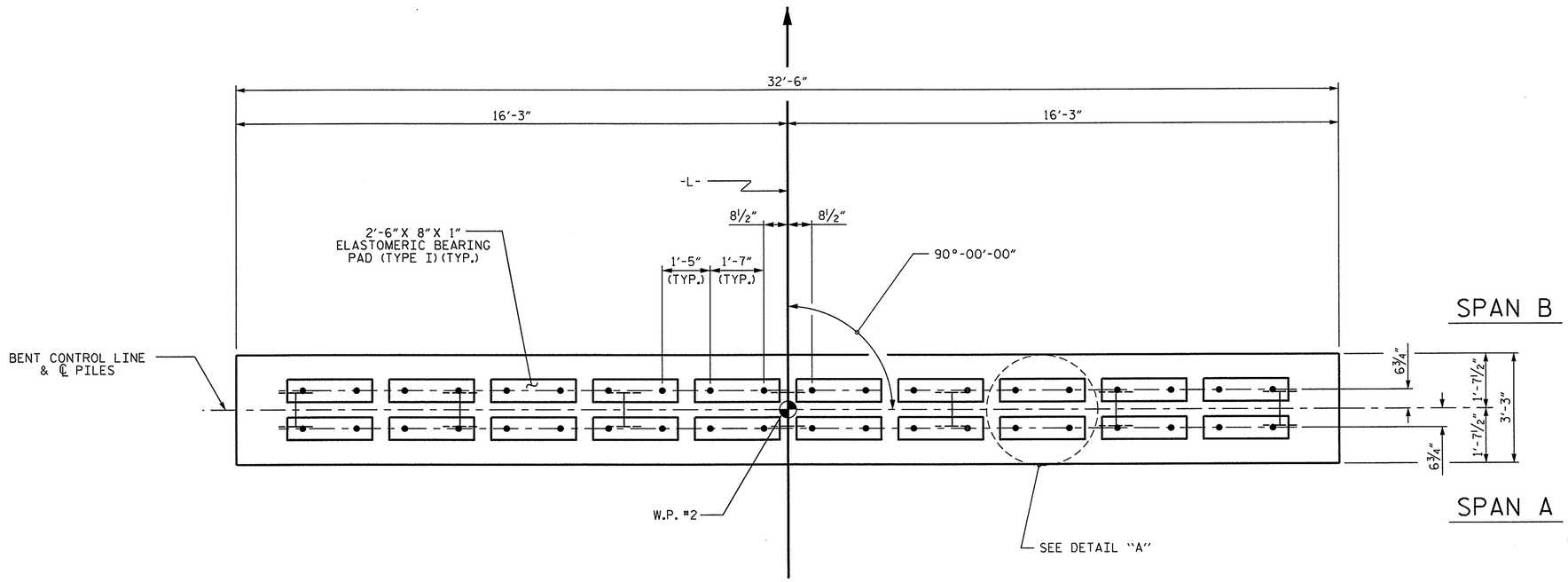


PLAN

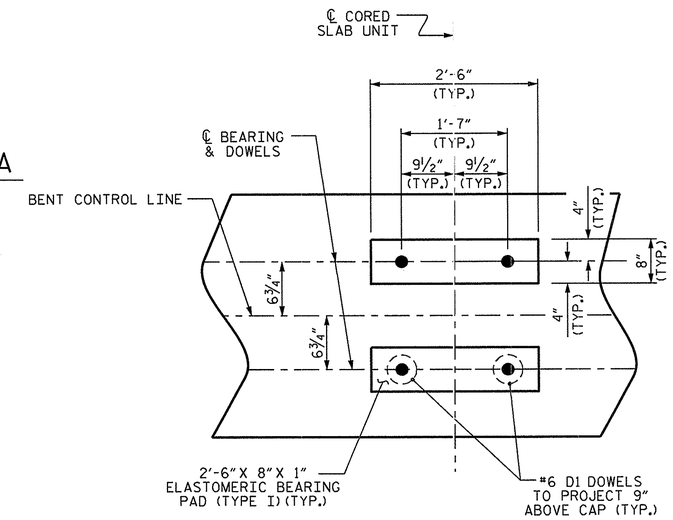


DETAIL "A"

(DIMENSIONS ARE TYPICAL EACH BEARING)

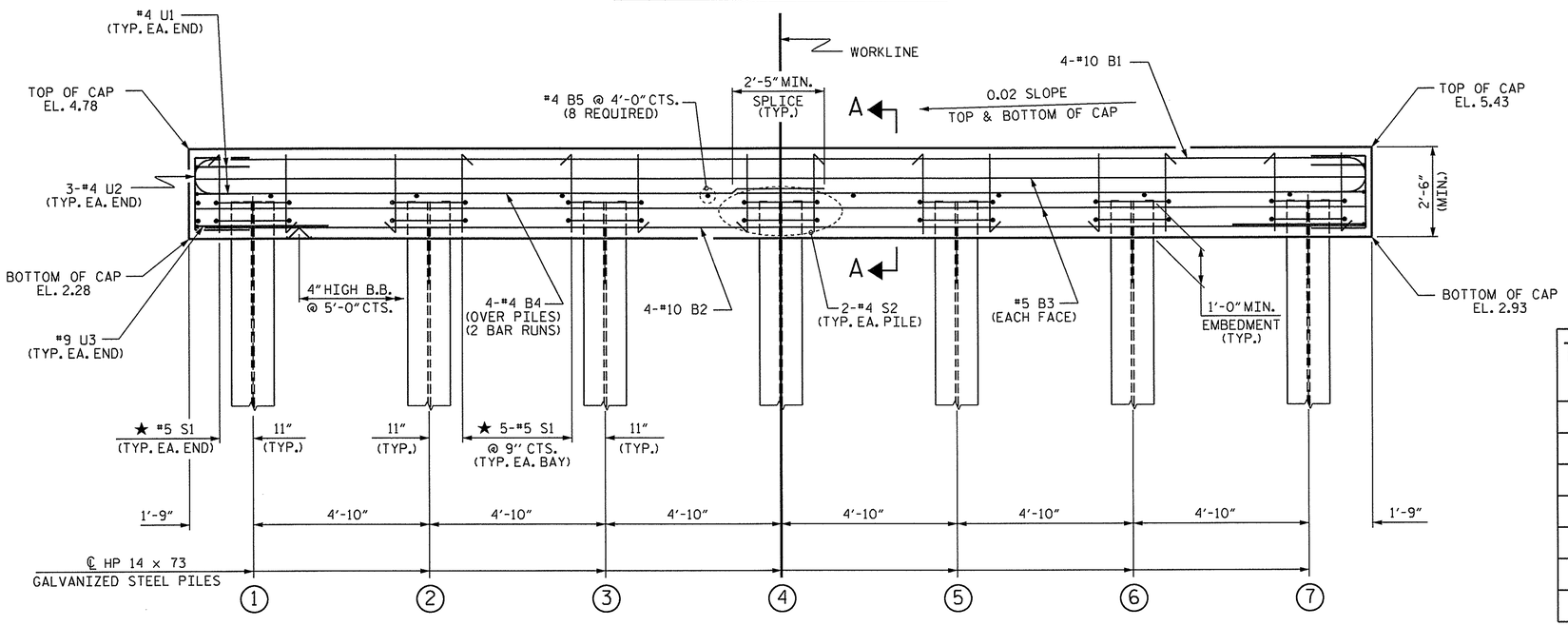


ELEVATION

FOR SECTION A-A, SEE SHEET 2 OF 2

| TOP OF PILE ELEVATIONS | |
|---|---|
| 1 | 3.32 |
| 2 | 3.42 |
| 3 | 3.52 |
| 4 | 3.61 |
| 5 | 3.71 |
| 6 | 3.81 |
| 7 | 3.90 |

PROJECT NO. 17BP.1.R.34

BERTIE COUNTY

STATION: 13+62.50 -L-

SHEET 1 OF 2

STATE OF NORTH CAROLINA
DEPARTMENT OF TRANSPORTATION
RALEIGH

SUBSTRUCTURE

BENT No. 1

NORTH CAROLINA PROFESSIONAL SEAL 14045 ENGINEER TIMOTHY L. COGGINS

Timothy L. Coggins 07/12/12

| REVISIONS | | | | | | SHEET NO. S-13 |
|---|---|---|---|---|---|---|
| NO. | BY: | DATE: | NO. | BY: | DATE: | TOTAL SHEETS 16 |
| 1 | | | 3 | | | |
| 2 | | | 4 | | | |

ASSEMBLED BY : N. RUFFIN DATE : 6/26/12
CHECKED BY : B.L. GREEN DATE : 7/2/12

DRAWN BY : DGE 05/10
CHECKED BY : MKT 05/10

12-JUL-2012 11:34
S:\DPG1\Tim\17BP.1.R.34\nruffin\17BP.1.R.34_sd_CS_01.dgn
tcoggins

STD. NO. 14" HP_BT_30_90S_<60'

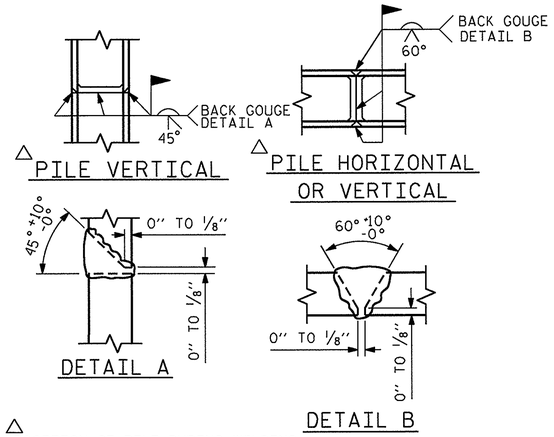


△ POSITION OF PILE DURING WELDING.

## PILE SPLICE DETAILS

## BAR TYPES

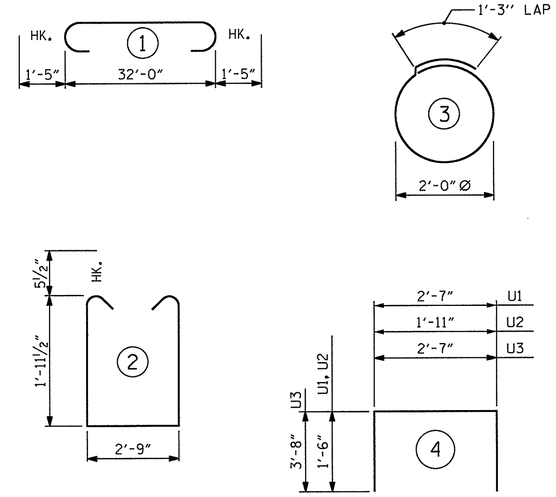


ALL BAR DIMENSIONS ARE OUT TO OUT.

## BILL OF MATERIAL
### FOR ONE BENT

| BAR | NO. | SIZE | TYPE | LENGTH | WEIGHT |
|---|---|---|---|---|---|
| * B1 | 4 | #10 | 1 | 34'-10" | 600 |
| * B2 | 4 | #10 | STR | 32'-0" | 551 |
| * B3 | 4 | #5 | STR | 32'-0" | 134 |
| * B4 | 8 | #4 | STR | 17'-4" | 93 |
| * B5 | 8 | #4 | STR | 2'-9" | 15 |
| | | | | | |
| * D1 | 40 | #6 | STR | 1'-6" | 90 |
| | | | | | |
| * S1 | 32 | #5 | 2 | 7'-7" | 253 |
| * S2 | 14 | #4 | 3 | 7'-7" | 71 |
| | | | | | |
| * U1 | 4 | #4 | 4 | 5'-7" | 15 |
| * U2 | 6 | #4 | 4 | 4'-11" | 20 |
| * U3 | 2 | #9 | 4 | 9'-11" | 67 |
| | | | | | |

* EPOXY COATED REINFORCING STEEL (FOR ONE BENT) 1909 LBS

CLASS AA CONCRETE BREAKDOWN (FOR ONE BENT)

POUR #1 (CAP) 9.8 C.Y.

TOTAL CLASS AA CONCRETE 9.8 C.Y.

HP 14 X 73 GALVANIZED STEEL PILES (FOR ONE BENT)

No. 7 LIN. FT. 441

PILE REDRIVES EA. 2

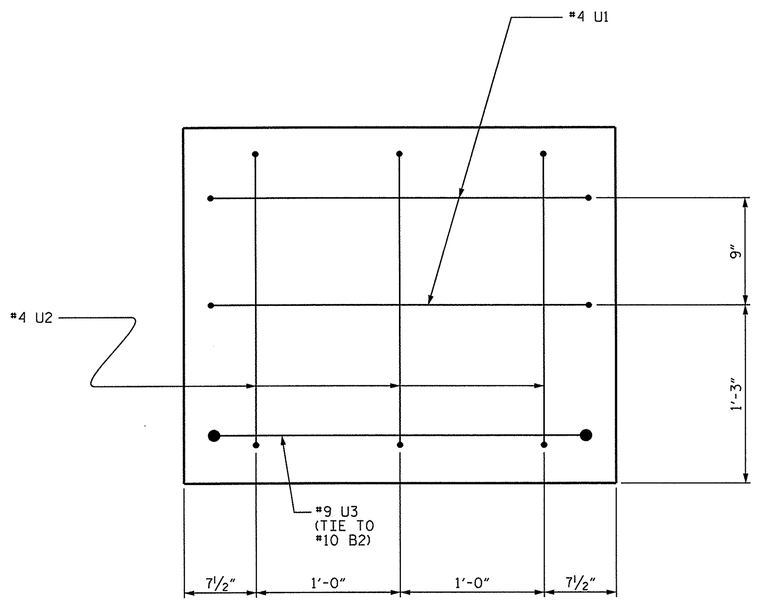


## END OF CAP VIEW
(TYPICAL BOTH ENDS)

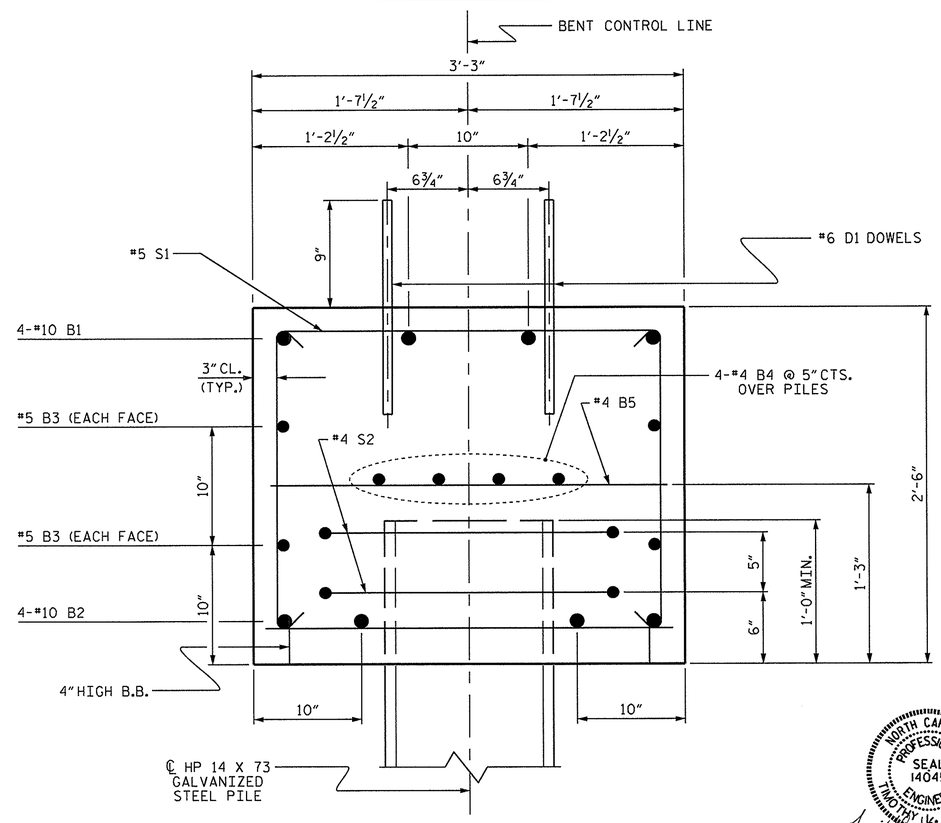


## SECTION A-A

NORTH CAROLINA PROFESSIONAL SEAL 14045 ENGINEER TIMOTHY W. COGGINS

Timothy W. Coggins 07/12/12

PROJECT NO. 17BP.1.R.34

BERTIE COUNTY

STATION: 13+62.50 -L-

SHEET 2 OF 2

STATE OF NORTH CAROLINA
DEPARTMENT OF TRANSPORTATION
RALEIGH

SUBSTRUCTURE

BENT No. 1

| REVISIONS | | | | | | | | SHEET NO. |
|---|---|---|---|---|---|---|---|---|
| NO. | BY: | DATE: | NO. | BY: | DATE: | | | S-14 |
| 1 | | | 3 | | | | | TOTAL SHEETS |
| 2 | | | 4 | | | | | 16 |

DRAWN BY : N. RUFFIN DATE : 6/26/12
CHECKED BY : B.L. GREEN DATE : 7/2/12

DRAWN BY : DGE 05/10
CHECKED BY : MKT 05/10

12-JUL-2012 11:34
S:\DPG1\Tim\17BP.1.R.34\nruffin\17BP.1.R.34_sd_CS_01.dgn
tcoggins

STD. NO. 14" HP_BT_30_90S_<60'

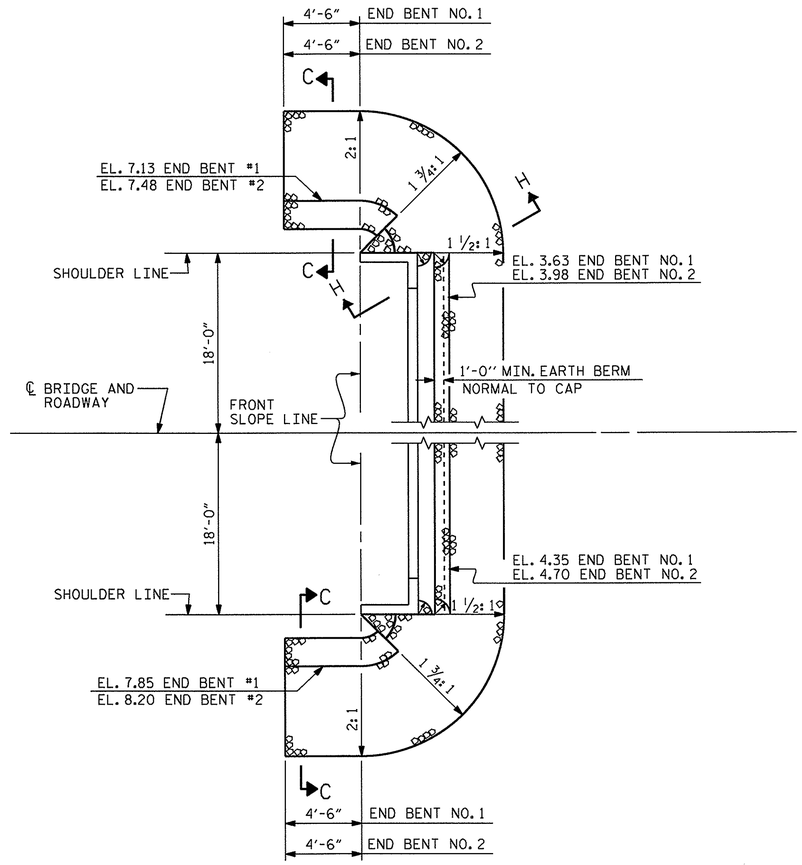


SHOULDER RIP RAP IS HIGHER THAN BERM RIP RAP

NOTES :

FOR EARTH BERM ELEVATIONS, SEE GENERAL DRAWING.

| ESTIMATED QUANTITIES | | |
|---|---|---|
| BRIDGE @ STA. 13+62.50 -L- | RIP RAP CLASS II (2'-0" THICK) | GEOTEXTILE FOR DRAINAGE |
| | TONS | SQUARE YARDS |
| END BENT 1 | 115 | 123 |
| END BENT 2 | 130 | 140 |

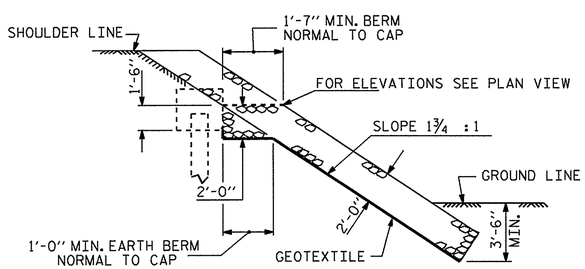


SECTION H-H

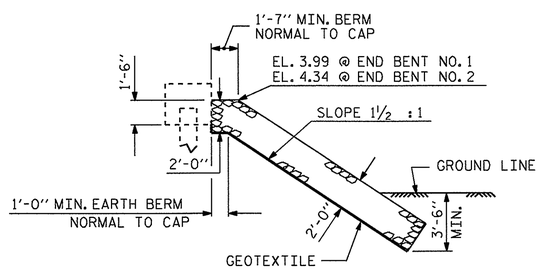


℄ SECTION

BERM RIP RAPPED

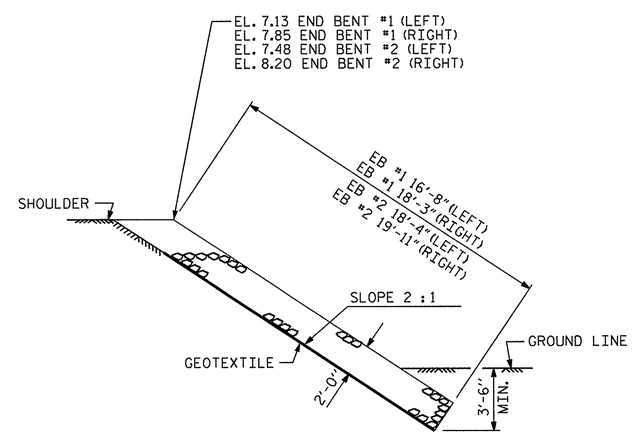


SECTION C-C

PROJECT NO. 17BP.1.R.34

BERTIE COUNTY

STATION: 13+62.50 -L-

STATE OF NORTH CAROLINA
DEPARTMENT OF TRANSPORTATION
RALEIGH

STANDARD

RIP RAP DETAILS

NORTH CAROLINA PROFESSIONAL SEAL 14045 ENGINEER TIMOTHY L. COGGINS

Timothy L. Coggins 07/12/12

| REVISIONS | | | | | | SHEET NO. |
|---|---|---|---|---|---|---|
| NO. | BY: | DATE: | NO. | BY: | DATE: | S-15 |
| 1 | | | 3 | | | TOTAL SHEETS |
| 2 | | | 4 | | | 16 |

| | | | |
|---|---|---|---|
| ASSEMBLED BY : N. RUFFIN | | DATE : 6/29/12 | |
| CHECKED BY : B.L. GREEN | | DATE : 7/2/12 | |
| DRAWN BY : REK 1/84 | REV. 5/1/06R | TLA/GM | |
| CHECKED BY : RDU 1/84 | REV. 10/1/11 | MAA/GM | |
| | REV. 12/21/11 | MAA/GM | |

12-JUL-2012 11:34
S:\DPGI\Tlm\17BP.1.R.34\nruffin\17BP.1.R.34_sd_CS_01.dgn
tcoggins

STD. NO. RR1 (Sht 2)

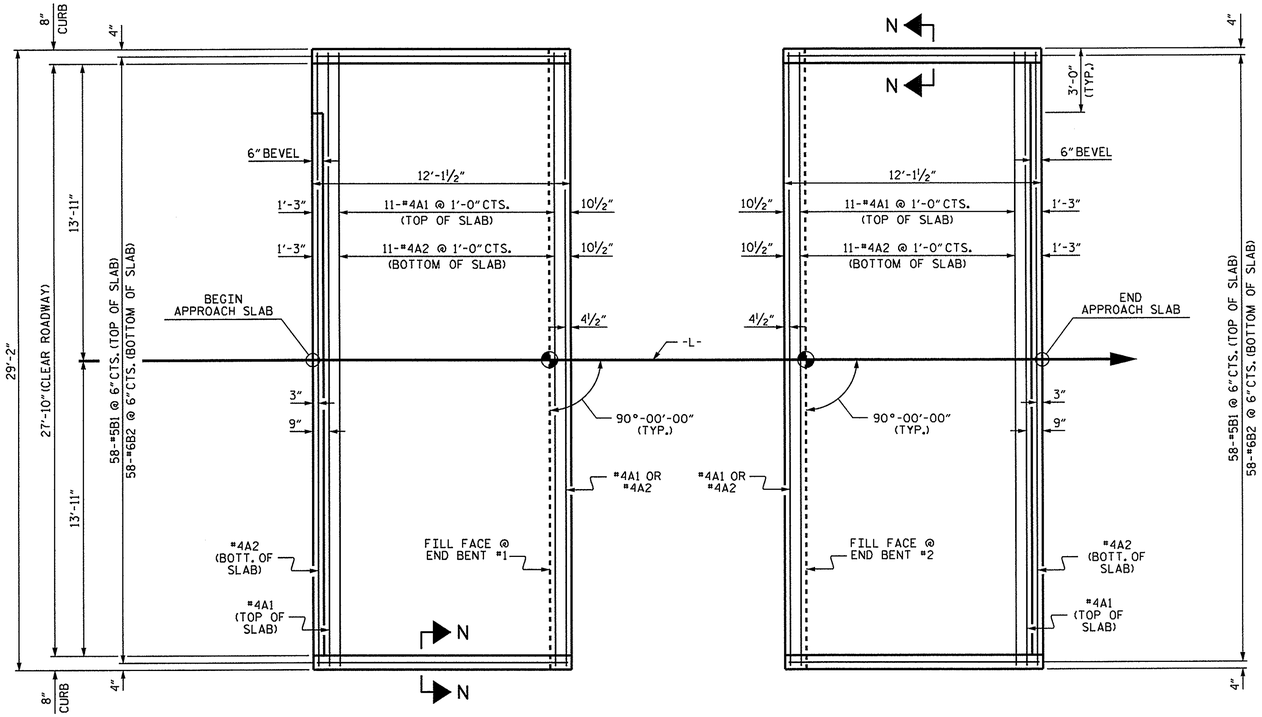


PLAN @ END BENT #1

PLAN @ END BENT #2

DIMENSIONS SHOWN ARE TYPICAL FOR BOTH APPROACH SLABS

## NOTES

FOR REINFORCED BRIDGE APPROACH FILL INCLUDING GEOTEXTILE, IMPERMEABLE GEOMEMBRANE, 4" Ø DRAINAGE PIPE, #78M STONE, AND SELECT MATERIAL, SEE ROADWAY PLANS.

AREA BETWEEN THE WINGWALL AND APPROACH SLAB SHALL BE GRADED TO DRAIN THE WATER AWAY FROM THE FILL FACE OF THE BRIDGE AND SHALL BE PAVED. SEE ROADWAY PLANS.

APPROACH SLAB GROOVING IS NOT REQUIRED.

## BILL OF MATERIAL

### APPROACH SLAB AT EB #1

| BAR | NO. | SIZE | TYPE | LENGTH | WEIGHT |
|---|---|---|---|---|---|
| * A1 | 13 | #4 | STR | 28'-10" | 250 |
| A2 | 13 | #4 | STR | 28'-10" | 250 |
| * B1 | 58 | #5 | STR | 11'-2" | 676 |
| B2 | 58 | #6 | STR | 11'-8" | 1016 |
| REINFORCING STEEL | | | | LBS. | 1266 |
| * EPOXY COATED REINFORCING STEEL | | | | LBS. | 926 |
| CLASS AA CONCRETE | | | | C. Y. | 16.9 |

### APPROACH SLAB AT EB #2

| BAR | NO. | SIZE | TYPE | LENGTH | WEIGHT |
|---|---|---|---|---|---|
| * A1 | 13 | #4 | STR | 28'-10" | 250 |
| A2 | 13 | #4 | STR | 28'-10" | 250 |
| * B1 | 58 | #5 | STR | 11'-2" | 676 |
| B2 | 58 | #6 | STR | 11'-8" | 1016 |
| REINFORCING STEEL | | | | LBS. | 1266 |
| * EPOXY COATED REINFORCING STEEL | | | | LBS. | 926 |
| CLASS AA CONCRETE | | | | C. Y. | 16.9 |

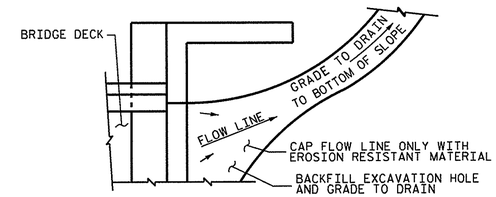


NOTE: IF THE APPROACH SLAB IS NOT CONSTRUCTED IMMEDIATELY AFTER THE BACKFILLING OF THE END BENT EXCAVATION, GRADE TO DRAIN TO THE BOTTOM OF THE SLOPE AND PROVIDE EROSION RESISTANT MATERIAL, SUCH AS FIBERGLASS ROVING OR AS DIRECTED BY THE ENGINEER TO PREVENT SOIL EROSION AND TO PROTECT THE AREA ADJACENT TO THE STRUCTURE. THE CONTRACTOR WILL BE REQUIRED TO REMOVE THESE MATERIALS PRIOR TO CONSTRUCTION OF THE APPROACH SLAB.

TEMPORARY DRAINAGE DETAIL

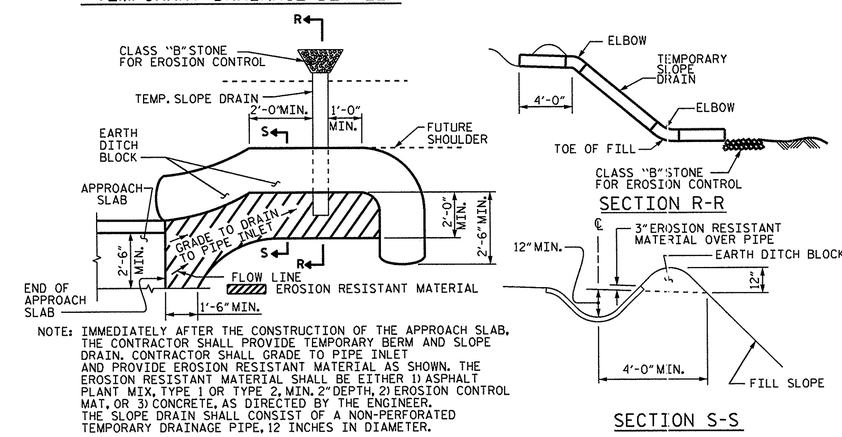


NOTE: IMMEDIATELY AFTER THE CONSTRUCTION OF THE APPROACH SLAB, THE CONTRACTOR SHALL PROVIDE TEMPORARY BERM AND SLOPE DRAIN. CONTRACTOR SHALL GRADE TO PIPE INLET AND PROVIDE EROSION RESISTANT MATERIAL AS SHOWN. THE EROSION RESISTANT MATERIAL SHALL BE EITHER 1) ASPHALT PLANT MIX, TYPE 1 OR TYPE 2, MIN. 2" DEPTH, 2) EROSION CONTROL MAT, OR 3) CONCRETE, AS DIRECTED BY THE ENGINEER. THE SLOPE DRAIN SHALL CONSIST OF A NON-PERFORATED TEMPORARY DRAINAGE PIPE, 12 INCHES IN DIAMETER.

PLAN VIEW

TEMPORARY BERM AND SLOPE DRAIN DETAILS

(TO BE USED WHEN SHOULDER BERM GUTTER IS REQUIRED)

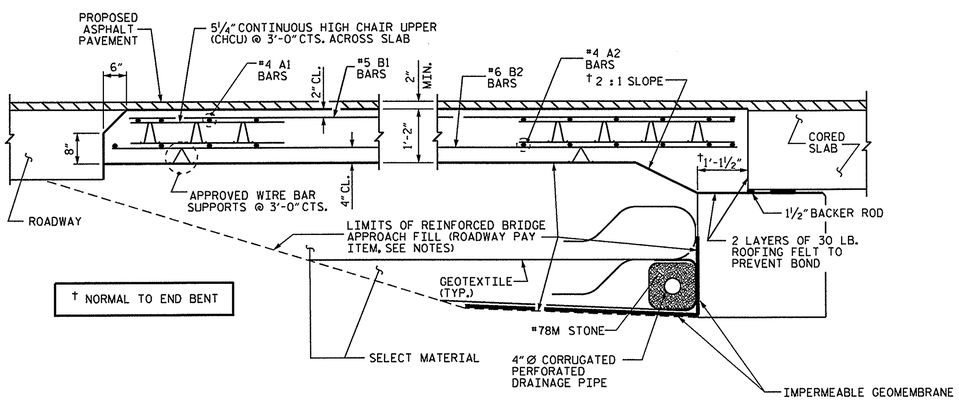


† NORMAL TO END BENT

SECTION THRU SLAB

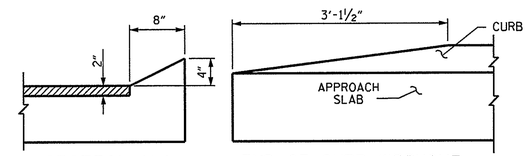


SECTION N-N

END OF CURB WITHOUT SHOULDER BERM GUTTER

CURB DETAILS

| SPLICE LENGTHS | | |
|---|---|---|
| BAR SIZE | EPOXY COATED | UNCOATED |
| #4 | 2'-0" | 1'-9" |
| #5 | 2'-6" | 2'-2" |
| #6 | 3'-10" | 2'-7" |

NORTH CAROLINA PROFESSIONAL SEAL 14045 ENGINEER TIMOTHY L. COGGINS

07/12/12

PROJECT NO. 17BP.1.R.34

BERTIE COUNTY

STATION: 13+62.50 -L-

STATE OF NORTH CAROLINA
DEPARTMENT OF TRANSPORTATION
RALEIGH

STANDARD
BRIDGE APPROACH SLAB
FOR PRESTRESSED CONCRETE
CORED SLAB UNIT
(SUB-REGIONAL TIER)
90° SKEW

| REVISIONS | | | | | | | SHEET NO. |
|---|---|---|---|---|---|---|---|
| NO. | BY: | DATE: | NO. | BY: | DATE: | | S-16 |
| 1 | | | 3 | | | | TOTAL SHEETS |
| 2 | | | 4 | | | | 16 |

| | |
|---|---|
| ASSEMBLED BY : N. RUFFIN | DATE : 6/26/12 |
| CHECKED BY : B.L. GREEN | DATE : 7/2/12 |
| DRAWN BY : SHS/MAA 5-09 | REV. 12-11 MAA/AAC |
| CHECKED BY : BCH 5-09 | |

12-JUL-2012 11:34
S:\DPG1\Tim\17BP.1.R.34\nruffin\17BP.1.R.34_sd_CS_01.dgn
tcoggins

STD. NO. BAS_30_90S

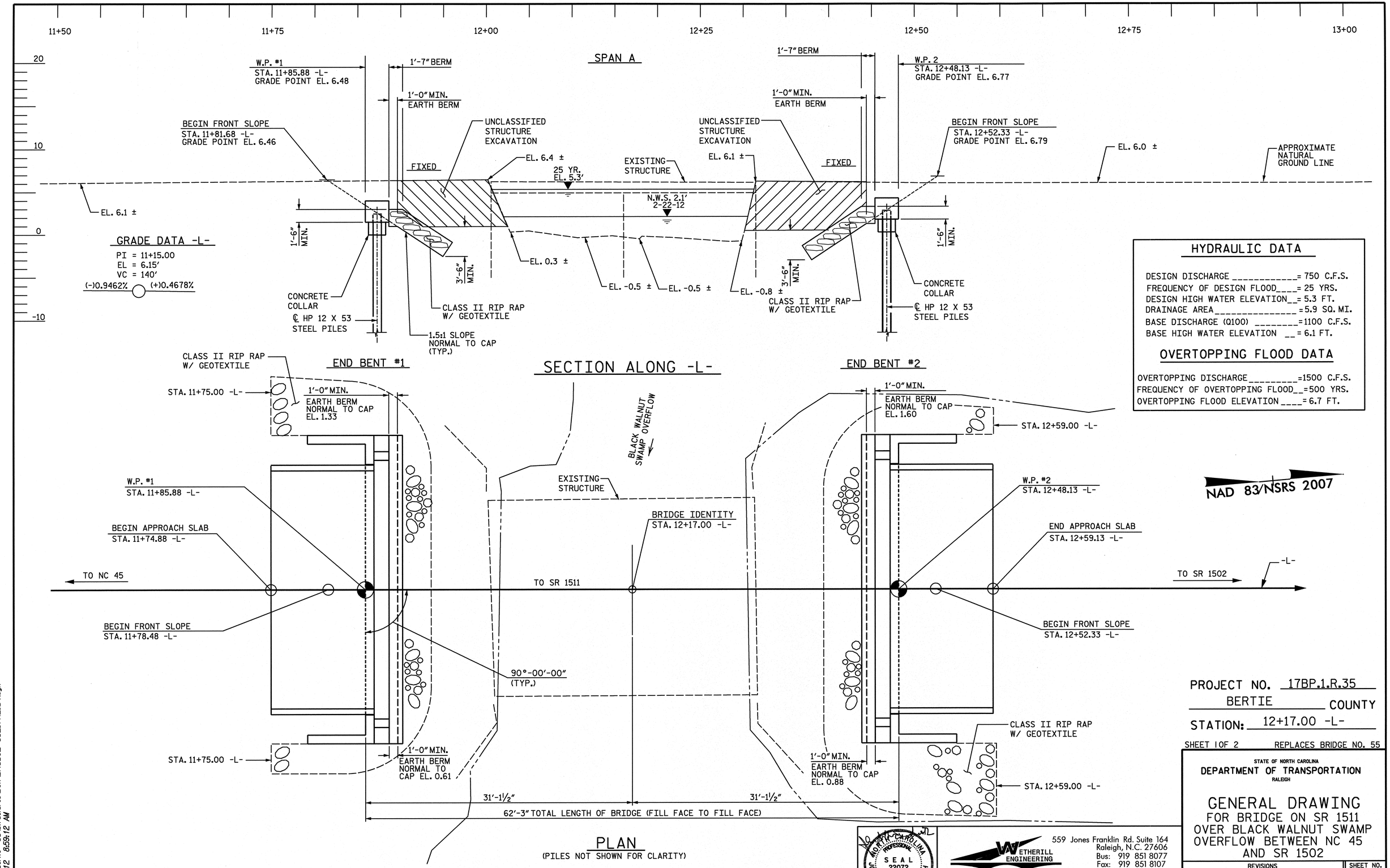


## HYDRAULIC DATA

DESIGN DISCHARGE _____ = 750 C.F.S.
FREQUENCY OF DESIGN FLOOD____ = 25 YRS.
DESIGN HIGH WATER ELEVATION__ = 5.3 FT.
DRAINAGE AREA_____ = 5.9 SQ. MI.
BASE DISCHARGE (Q100) _____ = 1100 C.F.S.
BASE HIGH WATER ELEVATION __ = 6.1 FT.

## OVERTOPPING FLOOD DATA

OVERTOPPING DISCHARGE_____ = 1500 C.F.S.
FREQUENCY OF OVERTOPPING FLOOD__ = 500 YRS.
OVERTOPPING FLOOD ELEVATION____ = 6.7 FT.

PROJECT NO. 17BP.1.R.35
BERTIE COUNTY
STATION: 12+17.00 -L-

SHEET 1 OF 2 REPLACES BRIDGE NO. 55

STATE OF NORTH CAROLINA
DEPARTMENT OF TRANSPORTATION
RALEIGH

# GENERAL DRAWING
FOR BRIDGE ON SR 1511
OVER BLACK WALNUT SWAMP
OVERFLOW BETWEEN NC 45
AND SR 1502

| REVISIONS | | | | | | | | SHEET NO. |
|---|---|---|---|---|---|---|---|---|
| NO. | BY: | DATE: | NO. | BY: | DATE: | | | S-1 |
| 1 | | | 3 | | | | | TOTAL SHEETS |
| 2 | | | 4 | | | | | 13 |

NORTH CAROLINA PROFESSIONAL SEAL 22072 ENGINEER JOHN ARTHUR DILWORTH 7-26-12


WETHERILL ENGINEERING
559 Jones Franklin Rd. Suite 164
Raleigh, N.C. 27606
Bus: 919 851 8077
Fax: 919 851 8107
License: F-0377
TRANSPORTATION PLANNING/DESIGN - BRIDGE/STRUCTURE DESIGN
CIVIL/SITE DESIGN - GIS/GPS - CONSTRUCTION OBSERVATION


DRAWN BY : J. PENDERGRAFT DATE : 6/12
CHECKED BY : J. DILWORTH DATE : 6/12

P:\2012\Bertie #55\Structures\DGN\BRIDGE 55_STR_GD1.dgn
7/26/2012 8:59:12 AM

TBM #2, SPIKE IN 10" OAK BL STA. 11+13.00, 35.00' RT. N 822866 E 2678744, EL = 3.99'

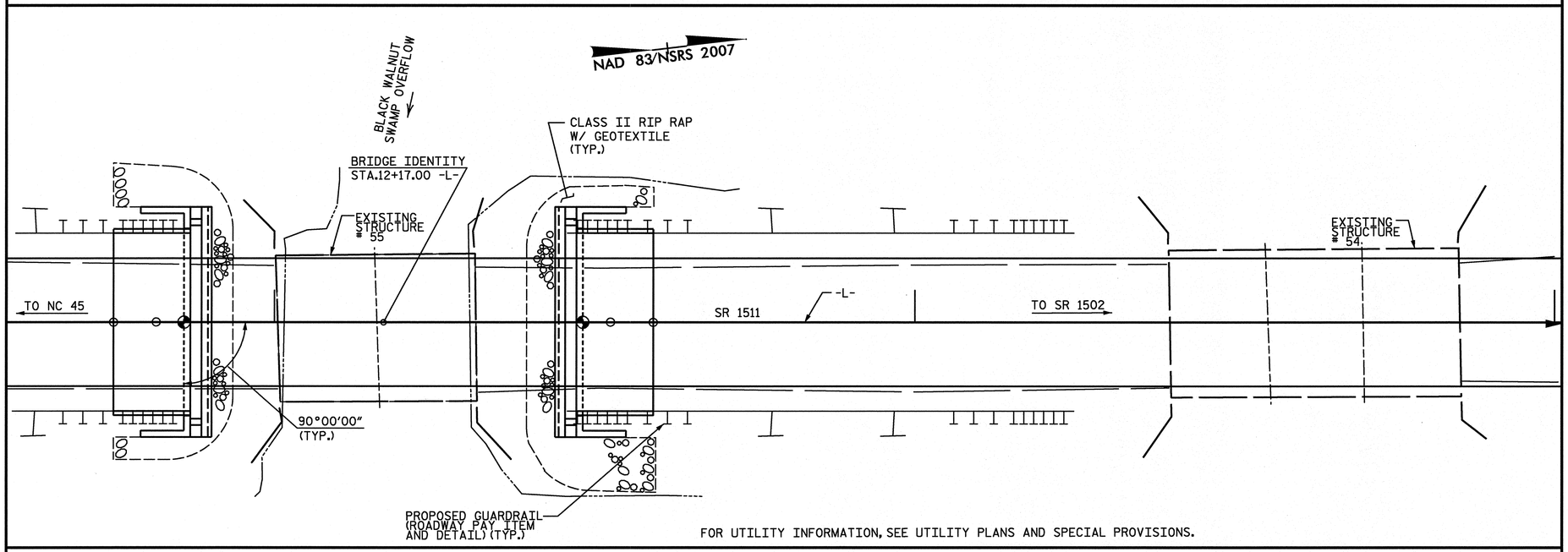


FOR UTILITY INFORMATION, SEE UTILITY PLANS AND SPECIAL PROVISIONS.

## LOCATION SKETCH

## TOTAL BILL OF MATERIAL

| | REMOVAL OF EXISTING STRUCTURE | PDA TESTING | UNCLASSIFIED STRUCTURE EXCAVATION | CLASS AA CONCRETE | BRIDGE APPROACH SLABS | EPOXY COATED REINFORCING STEEL | HP 12 x 53 STEEL PILES | | PILE REDRIVES | VERTICAL CONCRETE BARRIER RAIL | RIP RAP CLASS II (2'-0" THICK) | GEOTEXTILE FOR DRAINAGE | ELASTOMERIC BEARINGS | 3'-0" X 2'-0" PRESTRESSED CONCRETE CORED SLABS | |
|---|---|---|---|---|---|---|---|---|---|---|---|---|---|---|---|
| | LUMP SUM | EACH | LUMP SUM | CU. YDS. | LUMP SUM | LBS. | NO. | LIN. FT. | EACH | LIN. FT. | TONS | SQ. YD. | LUMP SUM | NO. | LIN. FT. |
| SUPERSTRUCTURE | LUMP SUM | | | | LUMP SUM | | | | | 120.00 | | | | 10 | 600'-0" |
| END BENT 1 | | | LUMP SUM | 13.3 | | 1952 | 5 | 360 | 2 | | 105 | 113 | | | |
| END BENT 2 | | | LUMP SUM | 13.3 | | 1952 | 5 | 370 | 2 | | 100 | 111 | | | |
| TOTAL | LUMP SUM | 1 | LUMP SUM | 26.6 | LUMP SUM | 3904 | 10 | 730 | 4 | 120.00 | 205 | 224 | LUMP SUM | 10 | 600'-0" |

## NOTES:

ASSUMED LIVE LOAD = HL-93 OR ALTERNATE LOADING.

FOR OTHER DESIGN DATA AND GENERAL NOTES, SEE SHEET SN.

FOR EROSION CONTROL MEASURES, SEE EROSION CONTROL PLANS.

THIS BRIDGE HAS BEEN DESIGNED IN ACCORDANCE WITH THE AASHTO LRFD BRIDGE DESIGN SPECIFICATIONS FOR SEISMIC PERFORMANCE ZONE 1.

THE EXISTING STRUCTURE CONSISTING OF 2 SPANS @ 15'-6" WITH A TIMBER FLOOR ON TIMBER JOISTS SUPERSTRUCTURE AND A CLEAR ROADWAY WIDTH OF 23.2' ON A SUBSTRUCTURE CONSISTING OF TIMBER CAPS ON TIMBER PILES AND LOCATED AT THE PROPOSED STRUCTURE LOCATION SHALL BE REMOVED.

REMOVAL OF THE EXISTING BRIDGE SHALL BE PERFORMED SO AS NOT TO ALLOW DEBRIS TO FALL INTO THE WATER. THE CONTRACTOR SHALL REMOVE THE BRIDGE AND SUBMIT PLANS FOR DEMOLITION IN ACCORDANCE WITH ARTICLE 402-2 OF THE STANDARD SPECIFICATIONS.

THE MATERIAL SHOWN IN THE CROSS-HATCHED AREA SHALL BE EXCAVATED FOR A DISTANCE OF 25 FT. EACH SIDE OF CENTERLINE ROADWAY AS DIRECTED BY ENGINEER. THIS WORK WILL BE PAID FOR AT THE CONTRACT LUMP SUM PRICE FOR UNCLASSIFIED STRUCTURE EXCAVATION. SEE SECTION 412 OF THE STANDARD SPECIFICATIONS.

THE SUBSTRUCTURE OF THE EXISTING BRIDGE INDICATED ON THE PLANS IS FROM THE BEST INFORMATION AVAILABLE. SINCE THIS INFORMATION IS SHOWN FOR THE CONVENIENCE OF THE CONTRACTOR, THE CONTRACTOR SHALL HAVE NO CLAIM WHATSOEVER AGAINST THE DEPARTMENT OF TRANSPORTATION FOR ANY DELAYS OR ADDITIONAL COST INCURRED BASED ON DIFFERENCE BETWEEN THE EXISTING BRIDGE SUBSTRUCTURE SHOWN ON THE PLANS AND THE ACTUAL CONDITIONS AT THE PROJECT SITE.

ASPHALT WEARING SURFACE IS INCLUDED IN ROADWAY QUANTITY ON ROADWAY PLANS.

CLASS AA CONCRETE SHALL BE USED IN ALL CAST-IN-PLACE END BENT CAPS AND SHALL CONTAIN CALCIUM NITRITE CORROSION INHIBITOR IN ACCORDANCE WITH THE STANDARD SPECIFICATIONS.

ALL BAR SUPPORTS USED IN THE VERTICAL CONCRETE BARRIER RAIL, END BENT CAPS, AND ALL INCIDENTAL REINFORCING STEEL SHALL BE EPOXY COATED IN ACCORDANCE WITH THE STANDARD SPECIFICATIONS.

THE CONCRETE IN THE END BENT CAPS OF END BENTS NO. 1 & 2 SHALL CONTAIN SILICA FUME. SILICA FUME SHALL BE SUBSTITUTED FOR 5% OF THE PORTLAND CEMENT BY WEIGHT. IF THE OPTION OF ARTICLE 1024-1 OF THE STANDARD SPECIFICATIONS TO PARTIALLY SUBSTITUTE CLASS F FLY ASH FOR PORTLAND CEMENT IS EXERCISED, THEN THE RATE OF FLY ASH SUBSTITUTION SHALL BE REDUCED TO 1.0 LB. OF FLY ASH PER 1.0 LB. NO PAYMENT WILL BE MADE FOR THIS SUBSTITUTION AS IT IS CONSIDERED INCIDENTAL TO THE VARIOUS PAY ITEMS.

THIS STRUCTURE HAS BEEN DESIGNED IN ACCORDANCE WITH HEC 18, "EVALUATING SCOUR AT BRIDGES", MAY 2001.

FOR SUBMITTAL OF WORKING DRAWINGS, SEE SPECIAL PROVISIONS.

FOR FALSEWORK AND FORMWORK, SEE SPECIAL PROVISIONS.

FOR CRANE SAFETY, SEE SPECIAL PROVISIONS.

FOR GROUT FOR STRUCTURES, SEE SPECIAL PROVISIONS.

FOR PILE DRIVING CRITERIA, SEE SPECIAL PROVISIONS.

## FOUNDATION NOTES:

FOR PILES, SEE SECTION 450 OF THE STANDARD SPECIFICATIONS.

PILES AT END BENT NO. 1 ARE DESIGNED FOR A FACTORED RESISTANCE OF 90 TONS PER PILE. DRIVE PILES TO A REQUIRED DRIVING RESISTANCE OF 150 TONS.

PILES AT END BENT NO. 2 ARE DESIGNED FOR A FACTORED RESISTANCE OF 90 TONS PER PILE. DRIVE PILES TO A REQUIRED DRIVING RESISTANCE OF 150 TONS.

TESTING PILES WITH THE PILE DRIVING ANALYZER (PDA) DURING DRIVING, RESTRIKING OR REDRIVING MAY BE REQUIRED. THE ENGINEER WILL DETERMINE THE NEED FOR PDA TESTING. FOR PDA TESTING, SEE SECTION 450 OF THE STANDARD SPECIFICATIONS.

IT HAS BEEN ESTIMATED THAT A HAMMER WITH AN EQUIVALENT RATED ENERGY IN THE RANGE OF 40 TO 45 FT.-KIPS PER BLOW WILL BE REQUIRED TO DRIVE PILES AT END BENTS NO. 1 & 2. THIS ESTIMATED ENERGY RANGE DOES NOT RELEASE THE CONTRACTOR FROM PROVIDING EQUIPMENT IN ACCORDANCE WITH THE PILE PROVISION.

PROJECT NO. 17BP.1.R.35

BERTIE COUNTY

STATION: 12+17.00 -L-

SHEET 2 OF 2 REPLACES BRIDGE NO. 55

STATE OF NORTH CAROLINA
DEPARTMENT OF TRANSPORTATION
RALEIGH

GENERAL DRAWING
FOR BRIDGE ON SR 1511
OVER BLACK WALNUT SWAMP
OVERFLOW BETWEEN NC 45
AND SR 1502

NORTH CAROLINA PROFESSIONAL SEAL 22072 ENGINEER JOHN ARTHUR DILWORTH 7-26-12


WETHERILL ENGINEERING
559 Jones Franklin Rd. Suite 164
Raleigh, N.C. 27606
Bus: 919 851 8077
Fax: 919 851 8107
License: F-0377
TRANSPORTATION PLANNING/DESIGN - BRIDGE/STRUCTURE DESIGN
CIVIL/SITE DESIGN - GIS/GPS - CONSTRUCTION OBSERVATION


| REVISIONS | | | | | | SHEET NO. |
|---|---|---|---|---|---|---|
| NO. | BY: | DATE: | NO. | BY: | DATE: | S-2 |
| 1 | | | 3 | | | TOTAL SHEETS |
| 2 | | | 4 | | | 13 |

DRAWN BY : J. PENDERGRAFT DATE : 6/12
CHECKED BY : J. DILWORTH DATE : 6/12

P:\2012\Bertie #55\Structures\DGN\BRIDGE 55_STR_TYP.dgn
7/26/2012 8:58:37 AM

# LOAD AND RESISTANCE FACTOR RATING (LRFD) SUMMARY FOR PRESTRESSED CONCRETE GIRDERS

| LEVEL | | VEHICLE | WEIGHT (W) (TONS) | CONTROLLING LOAD RATING | MINIMUM RATING FACTORS (RF) | TONS = W X RF | STRENGTH I LIMIT STATE | | | | | | | | | | | SERVICE III LIMIT STATE | | | | | | COMMENT NUMBER |
|---|---|---|---|---|---|---|---|---|---|---|---|---|---|---|---|---|---|---|---|---|---|---|---|---|
| | | | | | | | | MOMENT | | | | | SHEAR | | | | | | MOMENT | | | | | |
| | | | | | | | LIVELOAD FACTORS | DISTRIBUTION FACTORS (DF) | RATING FACTOR | SPAN | GIRDER LOCATION | DISTANCE FROM LEFT END OF SPAN (ft) | DISTRIBUTION FACTORS (DF) | RATING FACTOR | SPAN | GIRDER LOCATION | DISTANCE FROM LEFT END OF SPAN (ft) | LIVELOAD FACTORS | DISTRIBUTION FACTORS (DF) | RATING FACTOR | SPAN | GIRDER LOCATION | DISTANCE FROM LEFT END OF SPAN (ft) | |
| DESIGN LOAD RATING | | HL-93(Inv) | N/A | 1 | 1.33 | -- | 1.75 | 0.275 | 1.33 | 60' | EL | 29.5 | 0.52 | **1.33** | 60' | EL | **5.9** | 0.80 | 0.275 | 1.37 | 60' | EL | 29.5 | |
| | | HL-93(Opr) | N/A | -- | 1.725 | -- | 1.35 | 0.275 | 1.73 | 60' | EL | 29.5 | 0.52 | 1.72 | 60' | EL | 5.9 | N/A | -- | -- | -- | -- | -- | |
| | | HS-20(Inv) | 36.000 | 2 | 1.601 | 57.643 | 1.75 | 0.275 | 1.69 | 60' | EL | 29.5 | 0.52 | **1.6** | 60' | EL | **5.9** | 0.80 | 0.275 | 1.74 | 60' | EL | 29.5 | |
| | | HS-20(Opr) | 36.000 | -- | 2.076 | 74.723 | 1.35 | 0.275 | 2.19 | 60' | EL | 29.5 | 0.52 | 2.08 | 60' | EL | 5.9 | N/A | -- | -- | -- | -- | -- | |
| LEGAL LOAD RATING | SV | SNSH | 13.500 | -- | 3.745 | 50.557 | 1.4 | 0.275 | 4.55 | 60' | EL | 29.5 | 0.52 | 4.63 | 60' | EL | 5.9 | 0.80 | 0.275 | 3.74 | 60' | EL | 29.5 | |
| | | SNGARBS2 | 20.000 | -- | 2.867 | 57.338 | 1.4 | 0.275 | 3.48 | 60' | EL | 29.5 | 0.52 | 3.33 | 60' | EL | 5.9 | 0.80 | 0.275 | 2.87 | 60' | EL | 29.5 | |
| | | SNAGRIS2 | 22.000 | -- | 2.748 | 60.46 | 1.4 | 0.275 | 3.34 | 60' | EL | 29.5 | 0.52 | 3.11 | 60' | EL | 5.9 | 0.80 | 0.275 | 2.75 | 60' | EL | 29.5 | |
| | | SNCOTTS3 | 27.250 | -- | 1.866 | 50.841 | 1.4 | 0.275 | 2.27 | 60' | EL | 29.5 | 0.52 | 2.31 | 60' | EL | 5.9 | 0.80 | 0.275 | 1.87 | 60' | EL | 29.5 | |
| | | SNAGGRS4 | 34.925 | -- | 1.588 | 55.465 | 1.4 | 0.275 | 1.93 | 60' | EL | 29.5 | 0.52 | 1.95 | 60' | EL | 5.9 | 0.80 | 0.275 | 1.59 | 60' | EL | 29.5 | |
| | | SNS5A | 35.550 | -- | 1.551 | 55.139 | 1.4 | 0.275 | 1.89 | 60' | EL | 29.5 | 0.52 | 1.99 | 60' | EL | 5.9 | 0.80 | 0.275 | 1.55 | 60' | EL | 29.5 | |
| | | SNS6A | 39.950 | -- | 1.435 | 57.347 | 1.4 | 0.275 | 1.74 | 60' | EL | 29.5 | 0.52 | 1.83 | 60' | EL | 5.9 | 0.80 | 0.275 | 1.44 | 60' | EL | 29.5 | |
| | | SNS7B | 42.000 | -- | 1.367 | 57.434 | 1.4 | 0.275 | 1.66 | 60' | EL | 29.5 | 0.52 | 1.81 | 60' | EL | 5.9 | 0.80 | 0.275 | 1.37 | 60' | EL | 29.5 | |
| | TTST | TNAGRIT3 | 33.000 | -- | 1.754 | 57.887 | 1.4 | 0.275 | 2.13 | 60' | EL | 29.5 | 0.52 | 2.17 | 60' | EL | 5.9 | 0.80 | 0.275 | 1.75 | 60' | EL | 29.5 | |
| | | TNT4A | 33.075 | -- | 1.765 | 58.389 | 1.4 | 0.275 | 2.15 | 60' | EL | 29.5 | 0.52 | 2.1 | 60' | EL | 5.9 | 0.80 | 0.275 | 1.77 | 60' | EL | 29.5 | |
| | | TNT6A | 41.600 | -- | 1.456 | 60.551 | 1.4 | 0.275 | 1.77 | 60' | EL | 29.5 | 0.52 | 1.96 | 60' | EL | 5.9 | 0.80 | 0.275 | 1.46 | 60' | EL | 29.5 | |
| | | TNT7A | 42.000 | -- | 1.469 | 61.714 | 1.4 | 0.275 | 1.79 | 60' | EL | 29.5 | 0.52 | 1.88 | 60' | EL | 5.9 | 0.80 | 0.275 | 1.47 | 60' | EL | 29.5 | |
| | | TNT7B | 42.000 | -- | 1.535 | 64.463 | 1.4 | 0.275 | 1.87 | 60' | EL | 29.5 | 0.52 | 1.76 | 60' | EL | 5.9 | 0.80 | 0.275 | 1.53 | 60' | EL | 29.5 | |
| | | TNAGRIT4 | 43.000 | -- | 1.45 | 62.329 | 1.4 | 0.275 | 1.76 | 60' | EL | 29.5 | 0.52 | 1.7 | 60' | EL | 5.9 | 0.80 | 0.275 | 1.45 | 60' | EL | 29.5 | |
| | | TNAGT5A | 45.000 | -- | 1.361 | 61.247 | 1.4 | 0.275 | 1.65 | 60' | EL | 29.5 | 0.52 | 1.71 | 60' | EL | 5.9 | 0.80 | 0.275 | 1.36 | 60' | EL | 29.5 | |
| | | TNAGT5B | 45.000 | 3 | 1.34 | 60.282 | 1.4 | 0.275 | 1.63 | 60' | EL | 29.5 | 0.52 | 1.61 | 60' | EL | 5.9 | 0.80 | 0.275 | **1.34** | 60' | EL | **29.5** | |

## LOAD FACTORS:

| DESIGN LOAD RATING FACTORS | LIMIT STATE | $\gamma_{DC}$ | $\gamma_{DW}$ |
|---|---|---|---|
| | STRENGTH I | 1.25 | 1.50 |
| | SERVICE III | 1.00 | 1.00 |

## NOTES:

MINIMUM RATING FACTORS ARE BASED ON THE STRENGTH I AND SERVICE III LIMIT STATES.

ALLOWABLE STRESSES FOR SERVICE III LIMIT STATE ARE AS REQUIRED FOR DESIGN.

## COMMENTS:

1.
2.
3.
4.

| # CONTROLLING LOAD RATING |
|---|
| 1 DESIGN LOAD RATING (HL-93) |
| 2 DESIGN LOAD RATING (HS-20) |
| 3 LEGAL LOAD RATING ** |
| ** SEE CHART FOR VEHICLE TYPE |

| GIRDER LOCATION |
|---|
| I - INTERIOR GIRDER |
| EL - EXTERIOR LEFT GIRDER |
| ER - EXTERIOR RIGHT GIRDER |

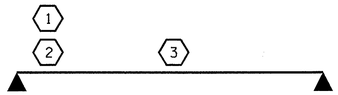


LRFR SUMMARY

FOR SPAN 'A'

PROJECT NO. 17BP.1.R.35

BERTIE COUNTY

STATION: 12+17.00 -L-

STATE OF NORTH CAROLINA
DEPARTMENT OF TRANSPORTATION
RALEIGH

STANDARD
LRFR SUMMARY FOR
60' CORED SLAB UNIT
90° SKEW
(NON-INTERSTATE TRAFFIC)

NORTH CAROLINA PROFESSIONAL SEAL 14045 ENGINEER TIMOTHY L. COGGINS
7/12/12

| REVISIONS | | | | | | SHEET NO. |
|---|---|---|---|---|---|---|
| NO. | BY: | DATE: | NO. | BY: | DATE: | S-3 |
| 1 | | | 3 | | | TOTAL SHEETS |
| 2 | | | 4 | | | 13 |

ASSEMBLED BY : M.D.PISO DATE :07-02-12
CHECKED BY : T.L.COGGINS DATE :07-09-12
DRAWN BY : CVC 6/10
CHECKED BY : DNS 6/10

12-JUL-2012 09:24
S:\DPGI\Tim\17BP.1.R.35\17BP.1.R.35_SD_LRFR.dgn
tcoggins

STD. NO. 24LRFR1_90S_60L

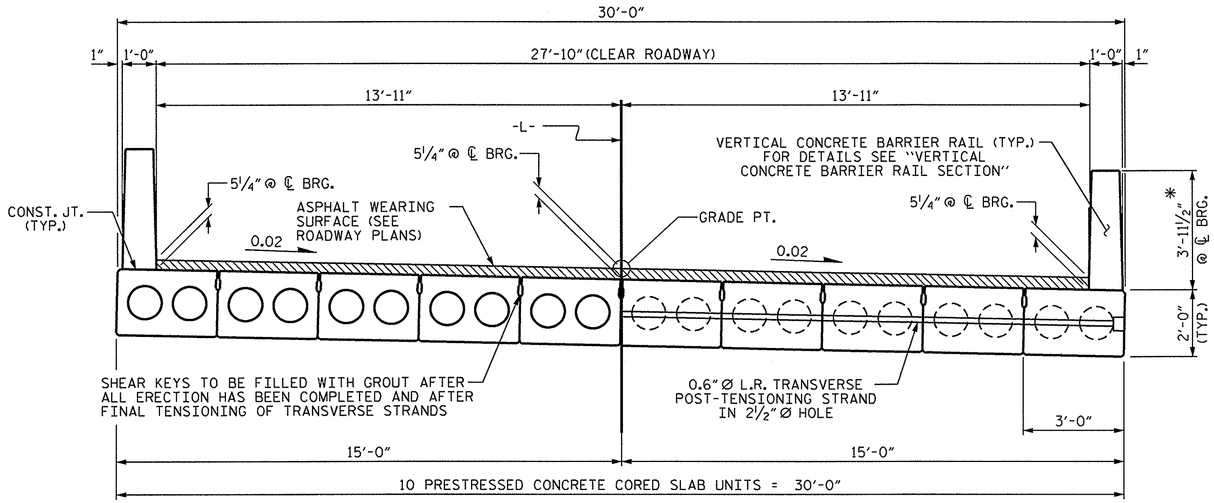


HALF SECTION
AT INTERMEDIATE DIAPHRAGMS

## TYPICAL SECTION

HALF SECTION
THROUGH VOIDS

* - THE MAXIMUM BARRIER RAIL HEIGHT AND ASPHALT THICKNESS IS SHOWN. THE HEIGHT OF THE BARRIER RAIL AND ASPHALT THICKNESS VARIES WHILE THE TOP OF THE BARRIER RAIL FOLLOWS THE PROFILE OF THE GUTTERLINE. FOR RAIL HEIGHT DETAILS AND ASPHALT THICKNESS, SEE THE "VERTICAL CONCRETE BARRIER RAIL SECTION" DETAIL.

FIXED END

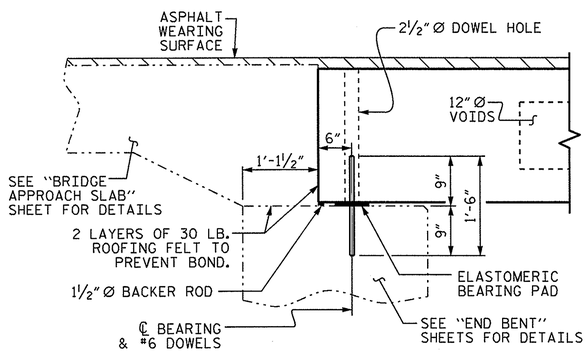


## SECTION AT END BENT

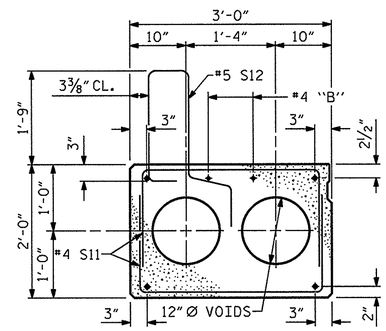


## EXTERIOR SLAB SECTION

(FOR PRESTRESSED STRAND LAYOUT, SEE INTERIOR SLAB SECTION.)

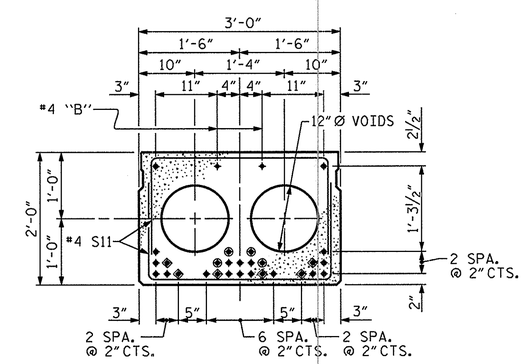


## 60'-0" INTERIOR SLAB SECTION UNIT

(24 STRANDS REQUIRED)

## 0.6" Ø LOW RELAXATION STRAND LAYOUT

◈ BOND SHALL BE BROKEN ON THESE STRANDS FOR A DISTANCE OF 12'-0" FROM END OF CORED SLAB UNIT. SEE STANDARD SPECIFICATIONS, ARTICLE 1078-7.

◉ OPTIONAL FULL LENGTH DEBONDED STRANDS. THESE STRANDS ARE NOT REQUIRED. IF THE FABRICATOR CHOOSES TO INCLUDE THESE STRANDS IN THE CORED SLAB UNIT, THE STRANDS SHALL BE DEBONDED FOR THE FULL LENGTH OF THE UNIT AT NO ADDITIONAL COST. SEE STANDARD SPECIFICATIONS, ARTICLE 1078-7.

## DEBONDING LEGEND

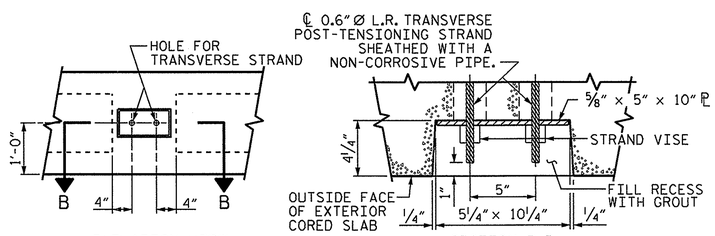


ELEVATION VIEW

SECTION B-B

## GROUTED RECESS AT END OF POST-TENSIONED STRAND CORED SLABS

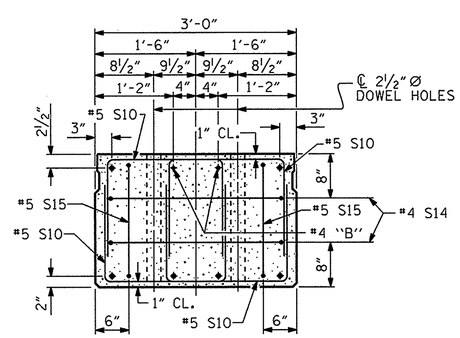


## END ELEVATION

SHOWING PLACEMENT OF DOUBLE STIRRUPS AND LOCATION OF DOWEL HOLES. (STRAND LAYOUT NOT SHOWN.) INTERIOR SLAB UNIT SHOWN-EXTERIOR SLAB UNIT SIMILAR EXCEPT SHEAR KEY LOCATION.

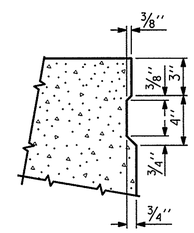


## SHEAR KEY DETAIL

NOTE: OMIT SHEAR KEY ON OUTSIDE FACE OF EXTERIOR CORED SLABS.

NORTH CAROLINA PROFESSIONAL SEAL 14045 ENGINEER
7/12/12

PROJECT NO. 17BP.1.R.35
BERTIE COUNTY
STATION: 12+17.00 -L-

SHEET 1 OF 3

STATE OF NORTH CAROLINA
DEPARTMENT OF TRANSPORTATION
RALEIGH

STANDARD

## 3'-0" X 2'-0" PRESTRESSED CONCRETE CORED SLAB UNIT

| REVISIONS | | | | | | SHEET NO. |
|---|---|---|---|---|---|---|
| NO. | BY: | DATE: | NO. | BY: | DATE: | S-4 |
| 1 | | | 3 | | | TOTAL SHEETS |
| 2 | | | 4 | | | 13 |

| | | | |
|---|---|---|---|
| ASSEMBLED BY : | M.D.PISO | DATE : | 06-26-27 |
| CHECKED BY : | N.M.RUFFIN | DATE : | 06-29-27 |
| DRAWN BY : MAA | 6/10 | REV. 12/11 | MAA/AAC |
| CHECKED BY : MKT | 7/10 | | |

12-JUL-2012 09:01
S:\DPGI\Tim\17BP.1.R.35\17BP.1.R.35_SD_TYP.dgn
tcoggins

STD. NO. 24PCS4_30_90S

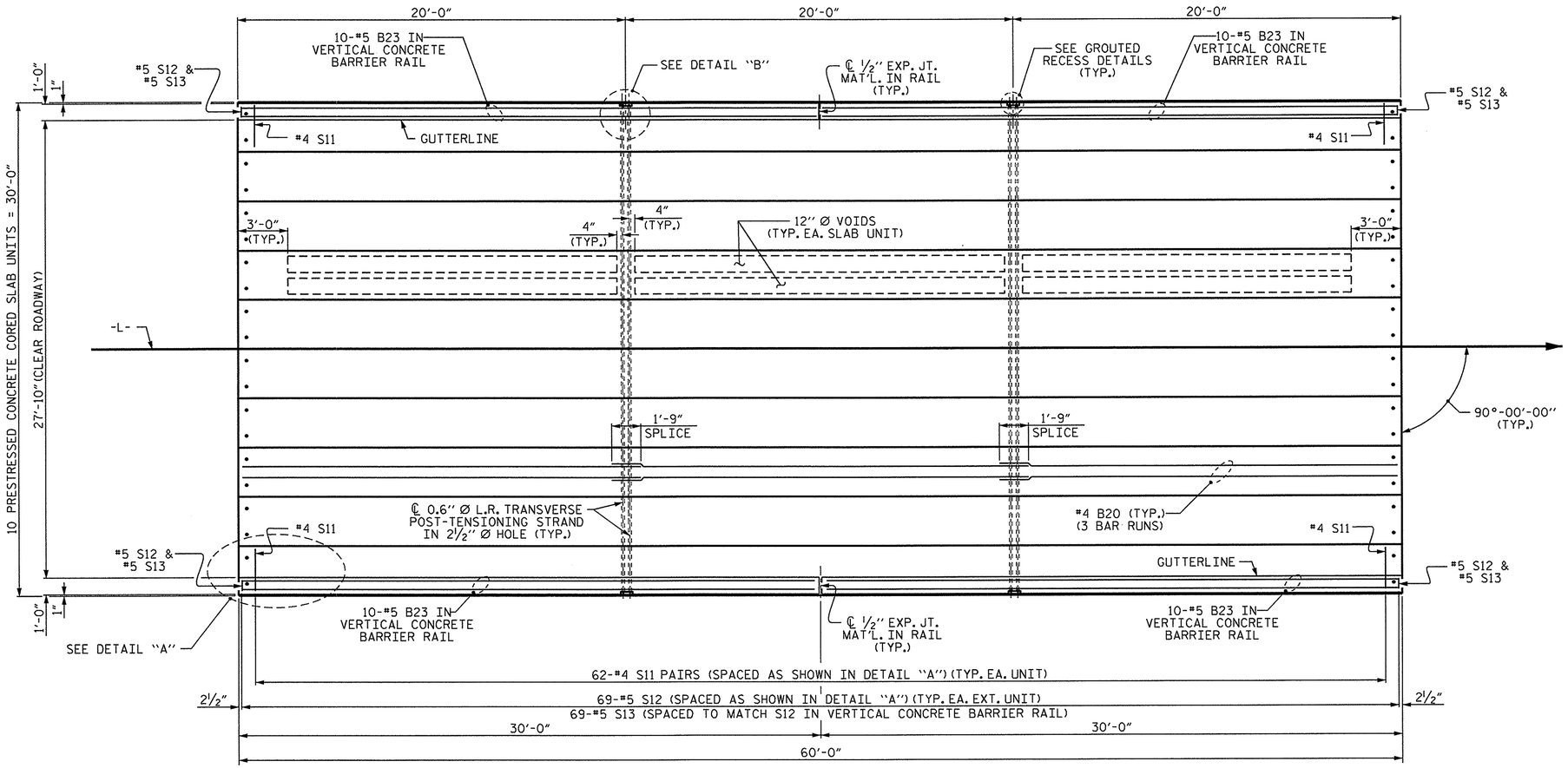


## PLAN OF UNIT

~~8 HORIZONTAL DECK DRAINS TO BE INSTALLED~~
AT 4'-0" CTS. AT THE FOLLOWING LOCATION:
RT: STA. 11+94.00 -L- TO STA. 12+42.00 -L-
(13 REQUIRED)

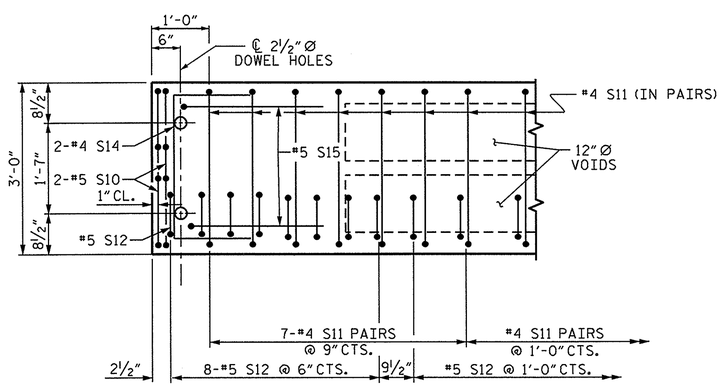


## DETAIL "A"

NOTE: EXTERIOR UNIT SHOWN - INTERIOR UNIT SIMILAR EXCEPT OMIT #5 S12 BARS.

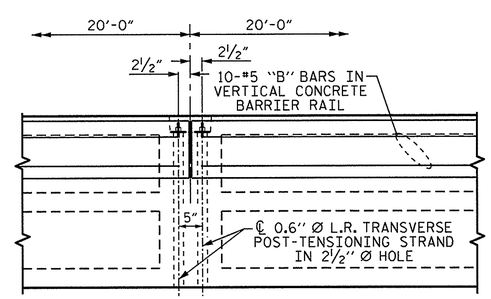


## DETAIL "B"

#4 S11 BARS MAY BE SHIFTED AS NECESSARY TO MAINTAIN 1" CLEAR TO GROUTED RECESS AND 2 1/2" Ø TRANSVERSE POST-TENSIONING STRAND HOLES

| | | | |
|---|---|---|---|
| ASSEMBLED BY : M.D.PISO | DATE : 06-26-12 | | |
| CHECKED BY : N.M.RUFFIN | DATE : 06-29-12 | | |
| DRAWN BY : MAA 6/10 | REV. 12/5/11 | MAA/AAC | |
| CHECKED BY : MKT 7/10 | | | |

12-JUL-2012 09:01
S:\DPG1\Tlm\17BP.1.R.35\17BP.1.R.35_SD_S#1.dgn
tcoggins

PROJECT NO. 17BP.1.R.35
BERTIE COUNTY
STATION: 12+17.00 -L-

SHEET 2 OF 3

STATE OF NORTH CAROLINA
DEPARTMENT OF TRANSPORTATION
RALEIGH

# PLAN OF 60' UNIT 27'-10" CLEAR ROADWAY 90° SKEW

NORTH CAROLINA PROFESSIONAL SEAL 14045 ENGINEER TIMOTHY L. COGGINS
7/12/12

| REVISIONS | | | | | | | SHEET NO. |
|---|---|---|---|---|---|---|---|
| NO. | BY: | DATE: | NO. | BY: | DATE: | | S-5 |
| 1 | | | 3 | | | | TOTAL SHEETS |
| 2 | | | 4 | | | | 13 |

STD. NO. 24PCS_30_90S_60L

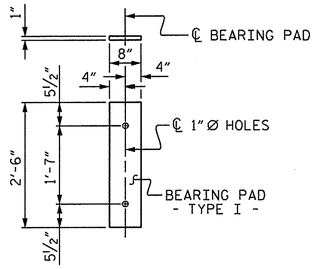


FIXED END
( TYPE I - 20 REQ'D )

## ELASTOMERIC BEARING DETAILS

ELASTOMER IN ALL BEARINGS SHALL BE 60 DUROMETER HARDNESS.

| GRADE 270 STRANDS | 0.6"Ø L.R. |
|---|---|
| AREA ( SQUARE INCHES ) | 0.217 |
| ULTIMATE STRENGTH ( LBS. PER STRAND ) | 58,600 |
| APPLIED PRESTRESS ( LBS. PER STRAND ) | 43,950 |

| CORED SLABS REQUIRED | NUMBER | LENGTH | TOTAL LENGTH |
|---|---|---|---|
| 60' UNIT | | | |
| EXTERIOR C.S. | 2 | 60'-0" | 120'-0" |
| INTERIOR C.S. | 8 | 60'-0" | 480'-0" |
| TOTAL | 10 | | 600'-0" |

### BILL OF MATERIAL FOR VERTICAL CONCRETE BARRIER RAIL

| BAR | BARS PER PAIR OF EXTERIOR UNITS | TOTAL NO. | SIZE | TYPE | LENGTH | WEIGHT |
|---|---|---|---|---|---|---|
| | 60' UNIT | | | | | |
| | | | | | | |
| *B23 | 40 | 40 | #5 | STR | 29'-7" | 1234 |
| | | | | | | |
| *S13 | 138 | 138 | #5 | 2 | 7'-2" | 1032 |
| | | | | | | |
| *EPOXY COATED REINFORCING STEEL | | | | LBS. | | 2266 |
| CLASS AA CONCRETE | | | | CU.YDS. | | 16.2 |
| TOTAL VERTICAL CONCRETE BARRIER RAIL | | | | LN. FT. | | 120.00 |

### BAR TYPES

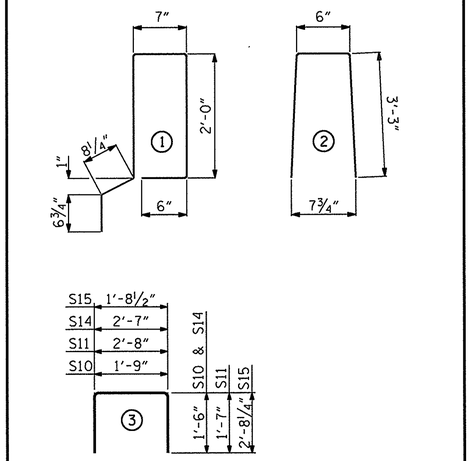


ALL BAR DIMENSIONS ARE OUT TO OUT

### DEAD LOAD DEFLECTION AND CAMBER

| | 3'-0" x 2'-0" |
|---|---|
| 60' CORED SLAB UNIT | 0.6"Ø L.R. STRAND |
| CAMBER ( SLAB ALONE IN PLACE ) | 3⅜" ↑ |
| DEFLECTION DUE TO SUPERIMPOSED DEAD LOAD** | ½" ↓ |
| FINAL CAMBER | 2⅞" ↑ |

** INCLUDES FUTURE WEARING SURFACE

### GUTTERLINE ASPHALT THICKNESS & RAIL HEIGHT

| | ASPHALT OVERLAY THICKNESS @ MID-SPAN | RAIL HEIGHT @ MID-SPAN |
|---|---|---|
| 60' UNITS | 2⅜" | 3'-8⅝" |

### BILL OF MATERIAL FOR ONE 60' CORED SLAB UNIT

| | | | | EXTERIOR UNIT | | INTERIOR UNIT | |
|---|---|---|---|---|---|---|---|
| BAR | NUMBER | SIZE | TYPE | LENGTH | WEIGHT | LENGTH | WEIGHT |
| B20 | 6 | #4 | STR | 21'-2" | 85 | 21'-2" | 85 |
| | | | | | | | |
| S10 | 8 | #5 | 3 | 4'-9" | 40 | 4'-9" | 40 |
| S11 | 124 | #4 | 3 | 5'-10" | 483 | 5'-10" | 483 |
| *S12 | 69 | #5 | 1 | 6'-4" | 456 | | |
| S14 | 4 | #4 | 3 | 5'-7" | 15 | 5'-7" | 15 |
| S15 | 4 | #5 | 3 | 7'-1" | 30 | 7'-1" | 30 |
| | | | | | | | |
| | | | | | | | |
| | | | | | | | |
| REINFORCING STEEL | | | LBS. | | 653 | | 653 |
| *EPOXY COATED REINFORCING STEEL | | | LBS. | | 456 | | |
| 6000 P.S.I. CONCRETE | | | CU. YDS. | | 10.2 | | 10.2 |
| | | | | | | | |
| 0.6"Ø L.R. STRANDS | | | No. | | 24 | | 24 |

### CONCRETE RELEASE STRENGTH

| UNIT | PSI |
|---|---|
| 60' UNITS | 4800 |

## NOTES

ALL PRESTRESSING STRANDS SHALL BE 7-WIRE LOW RELAXATION GRADE 270 STRANDS AND SHALL CONFORM TO AASHTO M203 EXCEPT FOR SAMPLING REQUIREMENTS WHICH SHALL BE IN ACCORDANCE WITH THE STANDARD SPECIFICATIONS.

ALL REINFORCING STEEL CAST WITH THE CORED SLAB SECTIONS SHALL BE GRADE 60 AND SHALL BE INCLUDED IN THE UNIT PRICE BID FOR PRESTRESSED CONCRETE CORED SLABS.

RECESSES FOR TRANSVERSE STRANDS SHALL BE GROUTED AFTER THE TENSIONING OF THE STRANDS.

THE 2½"Ø DOWEL HOLES AT FIXED ENDS OF SLAB SECTIONS SHALL BE FILLED WITH NON-SHRINK GROUT.

THE BACKER RODS SHALL CONFORM TO THE REQUIREMENTS OF TYPE M BOND BREAKER. SEE SECTION 1028 OF THE STANDARD SPECIFICATIONS.

WHEN CORED SLABS ARE CAST, AN INTERNAL HOLD-DOWN SYSTEM SHALL BE EMPLOYED TO PREVENT VOIDS FROM RISING OR MOVING SIDEWAYS. AT LEAST SIX WEEKS PRIOR TO CASTING CORED SLABS, THE CONTRACTOR SHALL SUBMIT TO THE ENGINEER FOR REVIEW AND COMMENT, DETAILED DRAWINGS OF THE PROPOSED HOLD-DOWN SYSTEM. IN ADDITION TO STRUCTURAL DETAILS, LOCATION AND SPACING OF THE HOLD-DOWNS SHALL BE INDICATED.

THE TRANSFER OF LOAD FROM THE ANCHORAGES TO THE CORED SLAB UNIT SHALL BE DONE WHEN THE CONCRETE HAS REACHED A COMPRESSIVE STRENGTH OF NOT LESS THAN THE REQUIRED STRENGTH SHOWN IN THE "CONCRETE RELEASE STRENGTH" TABLE.

ALL REINFORCING STEEL IN VERTICAL CONCRETE BARRIER RAILS SHALL BE EPOXY COATED.

PRESTRESSING STRANDS SHALL BE CUT FLUSH WITH THE CORED SLAB UNIT ENDS.

APPLY EPOXY PROTECTIVE COATING TO CORED SLAB UNIT ENDS.

GROOVED CONTRACTION JOINTS, ½" IN DEPTH, SHALL BE TOOLED IN ALL EXPOSED FACES OF THE BARRIER RAIL AND IN ACCORDANCE WITH ARTICLE 825-10(B) OF THE STANDARD SPECIFICATIONS. A CONTRACTION JOINT SHALL BE LOCATED AT EACH THIRD POINT BETWEEN BARRIER RAIL EXPANSION JOINTS. ONLY ONE CONTRACTION JOINT IS REQUIRED AT MIDPOINT OF BARRIER RAIL SEGMENTS LESS THAN 20 FEET IN LENGTH AND NO CONTRACTION JOINTS ARE REQUIRED FOR THOSE SEGMENTS LESS THAN 10 FEET IN LENGTH.

TRANSVERSE POST TENSIONING OF THE CORED SLAB UNITS SHALL BE DONE IN ACCORDANCE WITH THE STANDARD SPECIFICATIONS.

MAINTAIN A SYMMETRIC TENSION FORCE BETWEEN EACH PAIR OF TRANSVERSE POST TENSIONING STRANDS IN THE DIAPHRAGM.

THE #4 S11 STIRRUPS MAY BE SHIFTED AS NECESSARY TO MAINTAIN 1" CLEAR TO THE GROUTED RECESS.

FOR GROUT FOR STRUCTURES, SEE SPECIAL PROVISIONS.

PRESTRESSED CONCRETE CORED SLAB UNITS ARE DESIGNED FOR 0 PSI TENSION IN THE PRECOMPRESSED TENSILE ZONE UNDER ALL LOADING CONDITIONS.

PRESTRESSED CONCRETE CORED SLAB UNITS SHALL CONTAIN CALCIUM NITRATE CORROSION INHIBITOR IN ACCORDANCE WITH THE STANDARD SPECIFICATIONS.

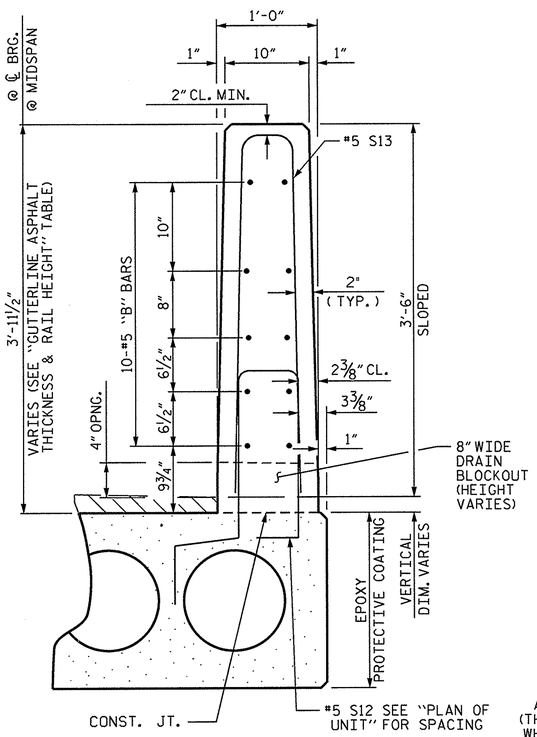


SECTION THRU RAIL

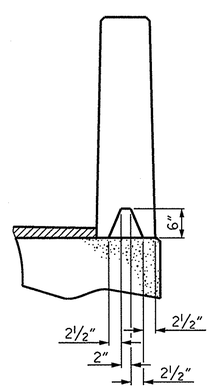


SECTION S-S
AT DAM IN OPEN JOINT
(THIS IS TO BE USED ONLY WHEN SLIP FORM IS USED)

## VERTICAL CONCRETE BARRIER RAIL DETAILS

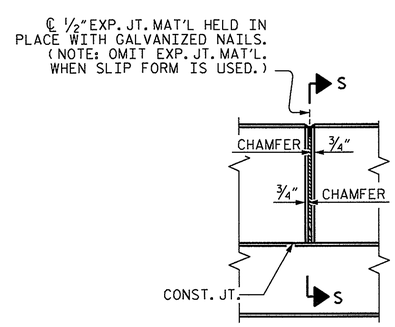


ELEVATION AT EXPANSION JOINTS

PROJECT NO. 17BP.1.R.35
BERTIE COUNTY
STATION: 12+17.00 -L-

SHEET 3 OF 3

STATE OF NORTH CAROLINA
DEPARTMENT OF TRANSPORTATION
RALEIGH

STANDARD
3'-0" X 2'-0"
PRESTRESSED CONCRETE
CORED SLAB UNIT

NORTH CAROLINA PROFESSIONAL SEAL 14045 ENGINEER TIMOTHY W. FOCGINS
7/12/12

| ASSEMBLED BY : M.D.PISO | DATE : 06-28-12 |
|---|---|
| CHECKED BY : N.M.RUFFIN | DATE : 06-29-12 |
| DRAWN BY : MAA 6/10 | REV. 12/11 MAA/AAC |
| CHECKED BY : MKT 7/10 | |

| REVISIONS | | | | | | | | SHEET NO. |
|---|---|---|---|---|---|---|---|---|
| NO. | BY: | DATE: | NO. | BY: | DATE: | | | S-6 |
| 1 | | | 3 | | | | | TOTAL SHEETS |
| 2 | | | 4 | | | | | 13 |

STD. NO. 24PCS3_30_90S

12-JUL-2012 09:01
S:\DPGI\Tim\17BP.1.R.35\17BP.1.R.35_SD_S*1.dgn
tcoggins

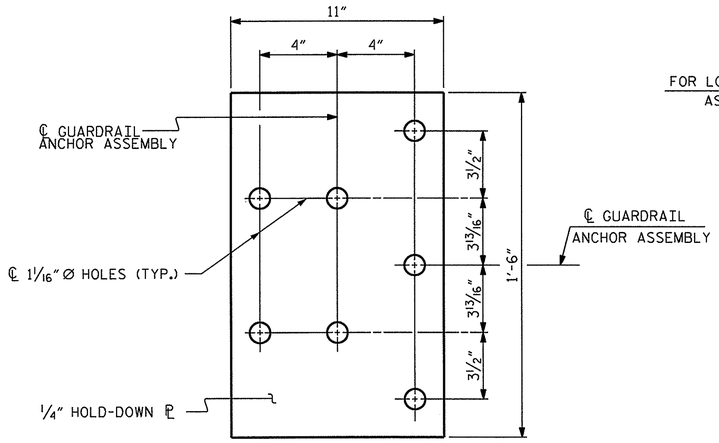


PLAN

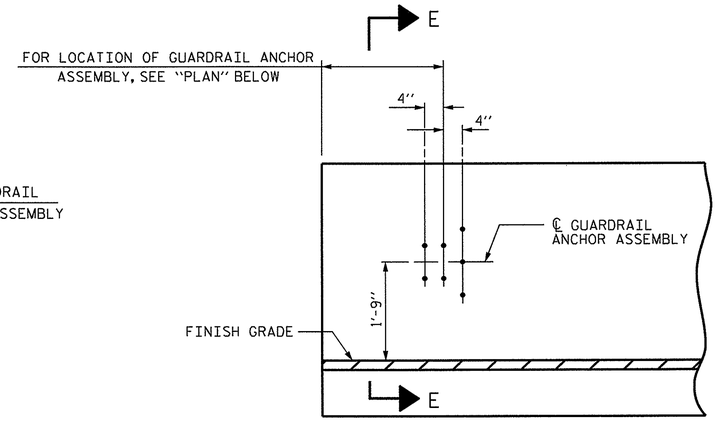


ELEVATION

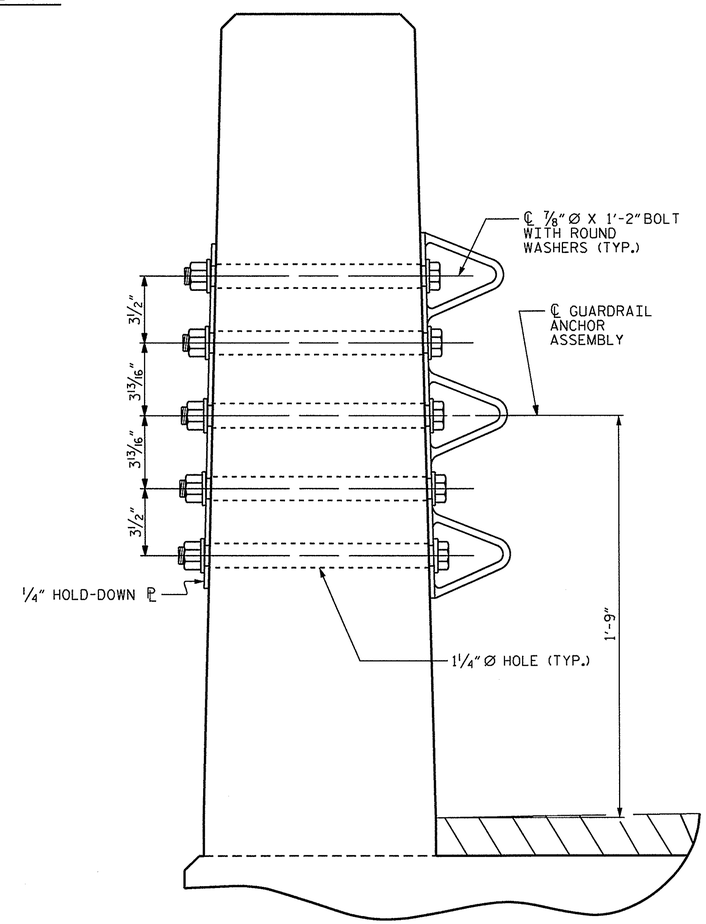


SECTION E-E

## GUARDRAIL ANCHOR ASSEMBLY DETAILS

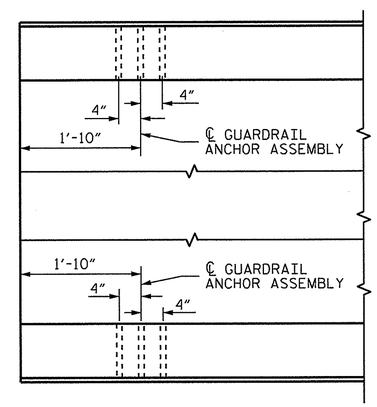


PLAN

## LOCATION OF ANCHORS FOR GUARDRAIL

END BENT #1 SHOWN, END BENT #2 SIMILAR.

## NOTES

THE GUARDRAIL ANCHOR ASSEMBLY SHALL CONSIST OF A 1/4" HOLD DOWN PLATE AND 7 - 7/8" Ø BOLTS WITH NUTS AND WASHERS.

THE HOLD-DOWN PLATE SHALL CONFORM TO AASHTO M270 GRADE 36. AFTER FABRICATION, THE HOLD-DOWN PLATE SHALL BE HOT-DIP GALVANIZED IN ACCORDANCE WITH AASHTO M111.

BOLTS SHALL CONFORM TO THE REQUIREMENTS OF ASTM A307 AND NUTS SHALL CONFORM TO THE REQUIREMENTS OF AASHTO M291. BOLTS, NUTS AND WASHERS SHALL BE GALVANIZED. (AT THE CONTRACTOR'S OPTION, STAINLESS STEEL BOLTS, NUTS AND WASHERS MAY BE USED AS AN ALTERNATE FOR THE 7/8" Ø GALVANIZED BOLTS, NUTS AND WASHERS. THEY SHALL CONFORM TO OR EXCEED THE MECHANICAL REQUIREMENTS OF ASTM A307. THE USE OF THIS ALTERNATE SHALL BE APPROVED BY THE ENGINEER.)

THE GUARDRAIL ANCHOR ASSEMBLY IS REQUIRED AT ALL POINTS WHERE APPROACH GUARDRAIL IS TO BE ATTACHED TO THE END OF BARRIER RAIL. FOR POINTS OF ATTACHMENT, SEE SKETCH.

AFTER INSTALLATION, THE EXPOSED THREAD OF THE BOLT SHALL BE BURRED WITH A SHARP POINTED TOOL.

THE COST OF THE GUARDRAIL ANCHOR ASSEMBLY SHALL BE INCLUDED IN THE UNIT CONTRACT PRICE BID FOR VERTICAL CONCRETE BARRIER RAIL.

THE VERTICAL REINFORCING BARS MAY BE SHIFTED SLIGHTLY IN THE VERTICAL CONCRETE BARRIER RAIL TO CLEAR ASSEMBLY BOLTS.

THE 1 1/4" Ø HOLES SHALL BE FORMED OR DRILLED WITH A CORE BIT. IMPACT TOOLS WILL NOT BE PERMITTED. ANY CONCRETE DAMAGED BY THIS WORK SHALL BE REPAIRED TO THE SATISFACTION OF THE ENGINEER.

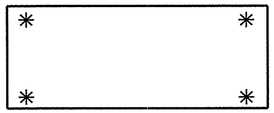

## SKETCH SHOWING POINTS OF ATTACHMENT

✳ DENOTES GUARDRAIL ANCHOR ASSEMBLY

PROJECT NO. 17BP.1.R.35

BERTIE COUNTY

STATION: 12+17.00 -L-

STATE OF NORTH CAROLINA
DEPARTMENT OF TRANSPORTATION
RALEIGH

STANDARD
GUARDRAIL ANCHORAGE FOR VERTICAL CONCRETE BARRIER RAIL

NORTH CAROLINA PROFESSIONAL SEAL 14045 ENGINEER TIMOTHY E. COGGINS
7/12/12

| REVISIONS | | | | | | SHEET NO. |
|---|---|---|---|---|---|---|
| NO. | BY: | DATE: | NO. | BY: | DATE: | S-7 |
| 1 | | | 3 | | | TOTAL SHEETS |
| 2 | | | 4 | | | 13 |

| | |
|---|---|
| ASSEMBLED BY : M.D.PISO | DATE : 06-26-12 |
| CHECKED BY : N.M.RUFFIN | DATE : 06-29-12 |
| DRAWN BY : MAA 5/10 | ADDED 5/6/10 |
| CHECKED BY : GM 5/10 | REV. 10/1/11 MAA/GM |
| | REV. 12/5/11 MAA/GM |

12-JUL-2012 09:01
S:\DP01\Tlm\17BP.1.R.35\17BP.1.R.35_SD_S*1.dgn
tcoggins

STD. NO. GRA3

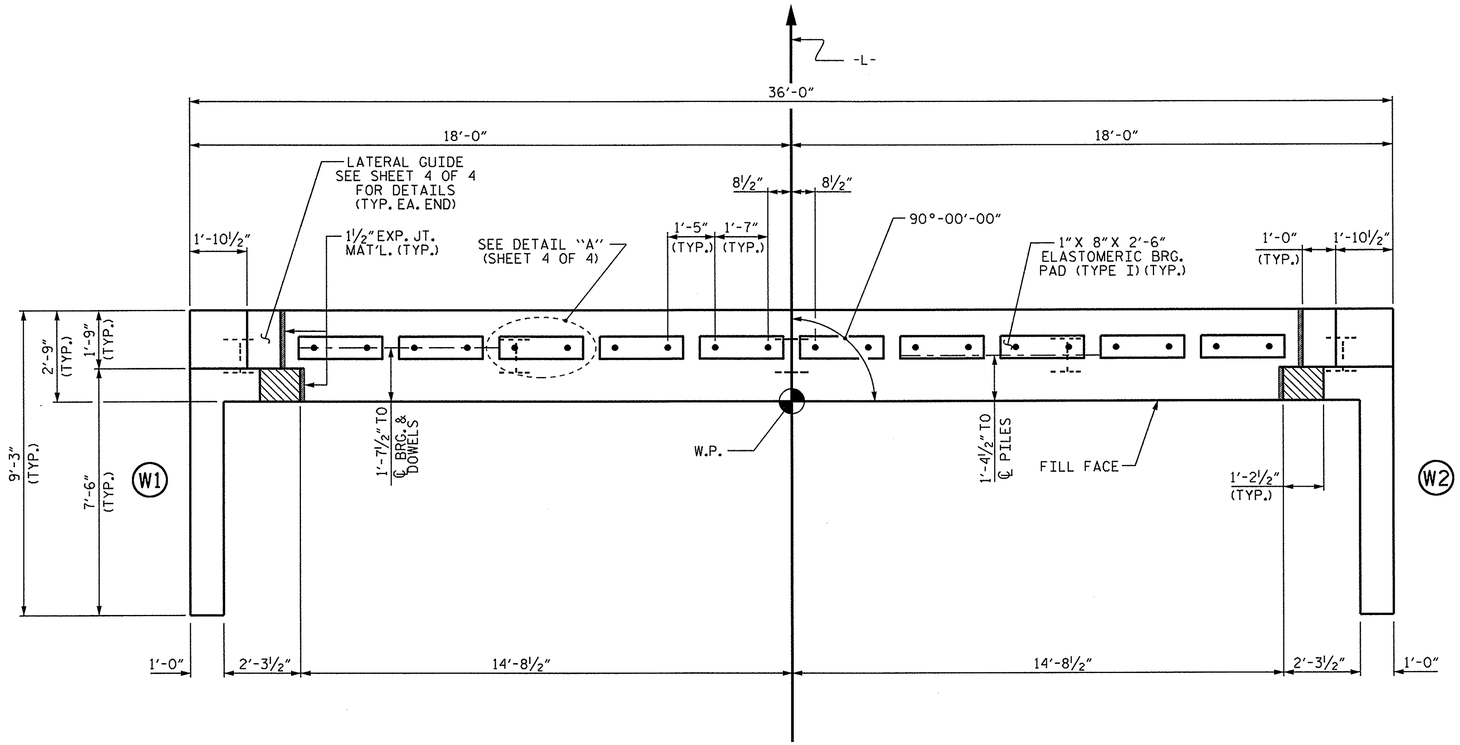


## PLAN

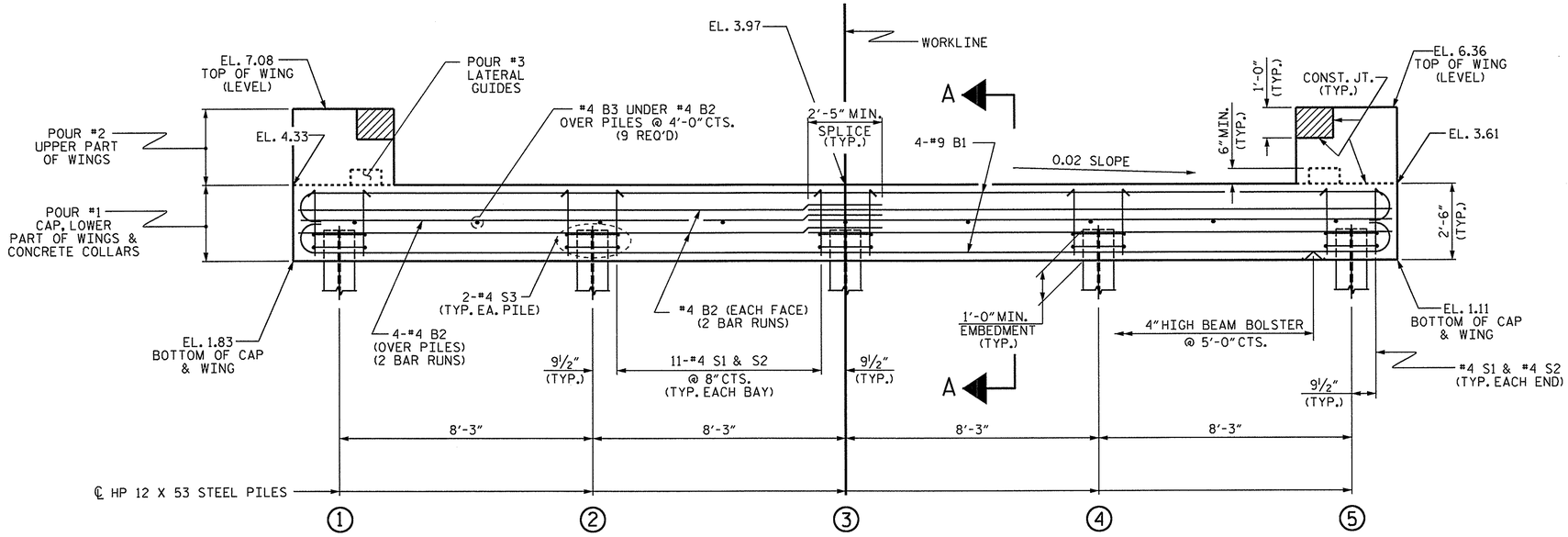


## ELEVATION

WINGS NOT SHOWN FOR CLARITY.
FOR SECTION A-A, SEE SHEET 4 OF 4.
CONCRETE COLLARS FOR STEEL PILES NOT SHOWN IN PLAN AND ELEVATION VIEWS FOR CLARITY.
SEE "CORROSION PROTECTION FOR STEEL PILES DETAIL", SHEET 4 OF 4.

## NOTES

STIRRUPS IN CAP MAY BE SHIFTED AS NECESSARY TO CLEAR DOWELS.

THE LATERAL GUIDES ARE NOT TO BE POURED UNTIL AFTER THE CORED SLAB UNITS ARE IN PLACE.

THE CONCRETE IN THE SHADED AREA OF THE WING SHALL BE POURED AFTER THE VERTICAL CONCRETE BARRIER RAIL IS CAST IF SLIP FORMING IS USED.

FOR PILE SPLICE DETAILS, SEE SHEET 4 OF 4.

FOR WING DETAILS, SEE SHEET 3 OF 4.

THE CONTRACTOR HAS THE OPTION TO OMIT THE LATERAL GUIDE IF APPROVED BY THE ENGINEER.

THE CONCRETE IN THE END BENT CAP OF END BENT NO. #1 SHALL CONTAIN SILICA FUME. SILICA FUME SHALL BE SUBSTITUTED FOR 5% OF THE PORTLAND CEMENT BY WEIGHT. IF THE OPTION OF ARTICLE 1024-1 OF THE STANDARD SPECIFICATIONS TO PARTIALLY SUBSTITUTE CLASS F FLY ASH FOR PORTLAND CEMENT IS EXERCISED, THEN THE RATE OF FLY ASH SUBSTITUTION SHALL BE REDUCED TO 1.0 LB OF FLY ASH PER 1.0 LB. NO PAYMENT WILL BE MADE FOR THIS SUBSTITUTION AS IT IS CONSIDERED INCIDENTAL TO THE VARIOUS PAY ITEMS.

INSTALL THE 4" DIA. DRAIN PIPE THROUGH THE WING WALL AS REQUIRED FOR REINFORCED BRIDGE APPROACH FILLS, SEE ROADWAY PLANS. REINFORCING STEEL IN THE WING WALL MAY BE SHIFTED AS NECESSARY TO CLEAR THE DRAIN PIPE.

| TOP OF PILE ELEVATIONS | |
|---|---|
| 1 | 2.81 |
| 2 | 2.65 |
| 3 | 2.48 |
| 4 | 2.32 |
| 5 | 2.15 |

PROJECT NO. 17BP.1.R.35
BERTIE COUNTY
STATION: 12+17.00 -L-

SHEET 1 OF 4

STATE OF NORTH CAROLINA
DEPARTMENT OF TRANSPORTATION
RALEIGH

SUBSTRUCTURE

END BENT No. 1

NORTH CAROLINA PROFESSIONAL SEAL 14045 ENGINEER TIMOTHY L. COGGINS
7/12/12

| REVISIONS | | | | | | | SHEET NO. S-8 |
|---|---|---|---|---|---|---|---|
| NO. | BY: | DATE: | NO. | BY: | DATE: | | TOTAL SHEETS 13 |
| 1 | | | 3 | | | | |
| 2 | | | 4 | | | | |

| | | | |
|---|---|---|---|
| ASSEMBLED BY : | M.D.PISO | DATE : | 06-26-12 |
| CHECKED BY : | N.M.RUFFIN | DATE : | 06-29-12 |
| DRAWN BY : | DGE | 02/10 | |
| CHECKED BY : | MKT | 02/10 | |

12-JUL-2012 09:01
S:\DPG1\Tim\17BP.1.R.35\17BP.1.R.35_SD_EB.dgn
tcoggins

STD. NO. EB_30_90S

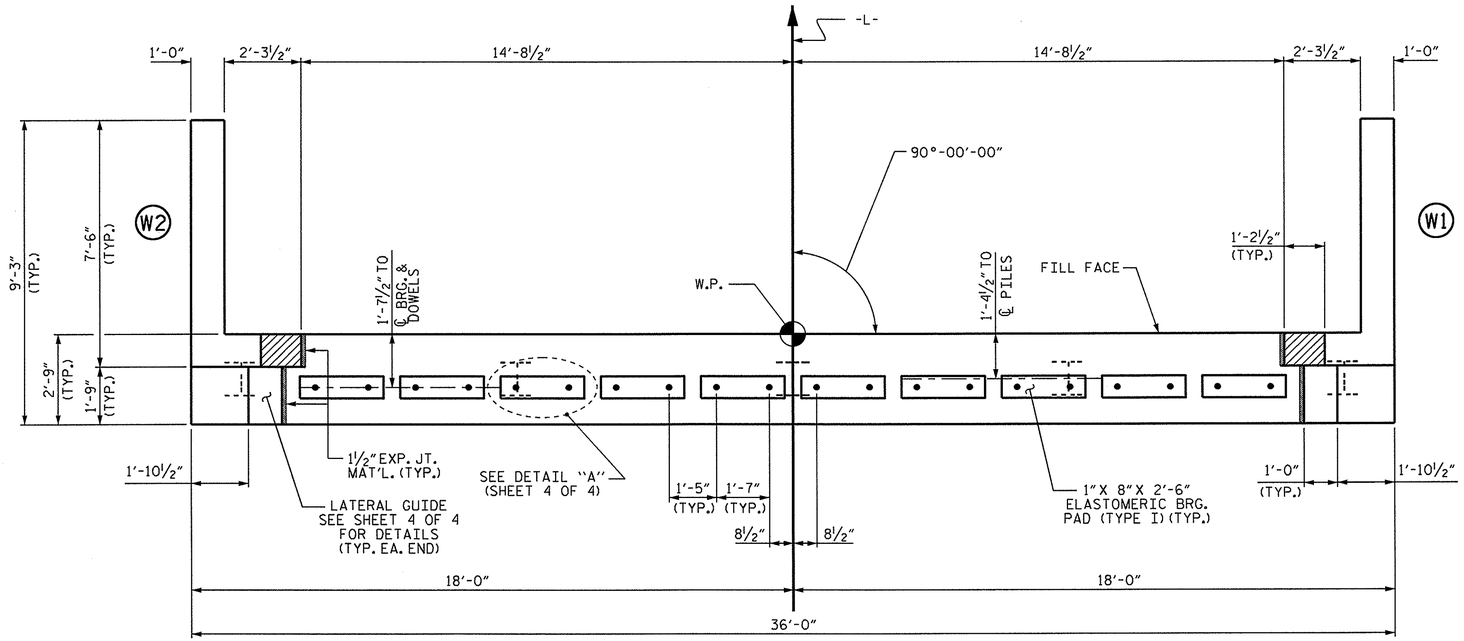


## PLAN

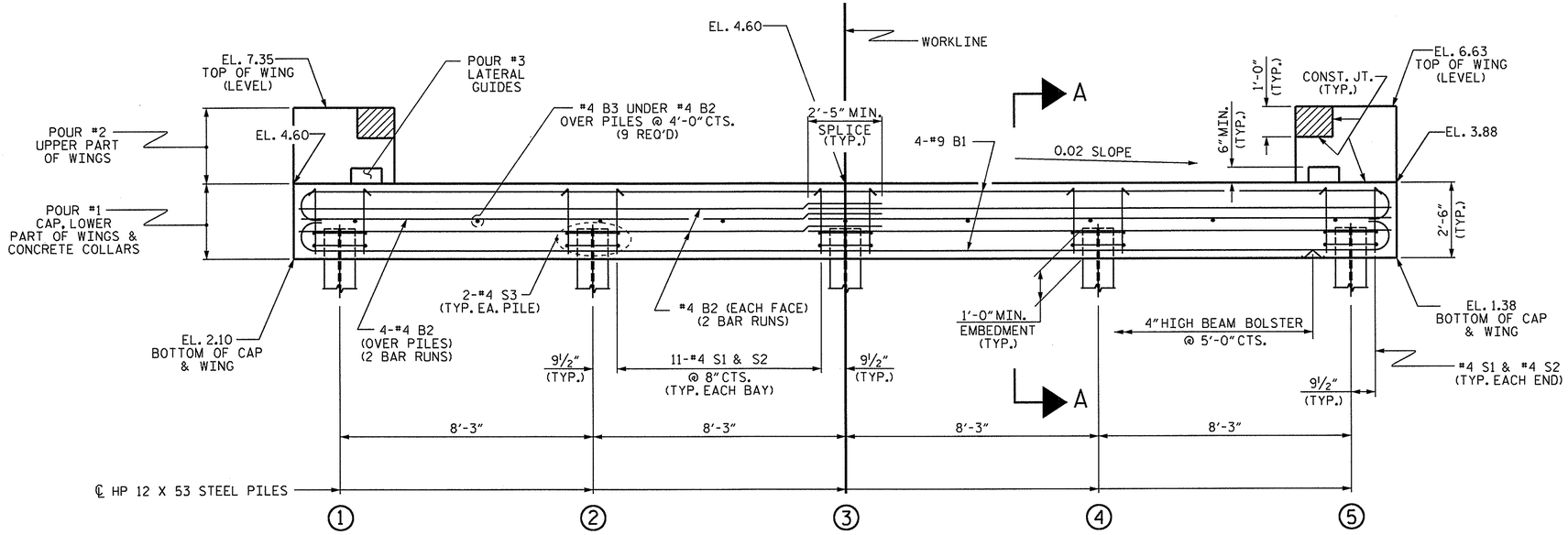


## ELEVATION

WINGS NOT SHOWN FOR CLARITY.
FOR SECTION A-A, SEE SHEET 4 OF 4.
CONCRETE COLLARS FOR STEEL PILES NOT SHOWN IN PLAN AND ELEVATION VIEWS FOR CLARITY.
SEE "CORROSION PROTECTION FOR STEEL PILES DETAIL", SHEET 4 OF 4.

## NOTES

STIRRUPS IN CAP MAY BE SHIFTED AS NECESSARY TO CLEAR DOWELS.

THE LATERAL GUIDES ARE NOT TO BE POURED UNTIL AFTER THE CORED SLAB UNITS ARE IN PLACE.

THE CONCRETE IN THE SHADED AREA OF THE WING SHALL BE POURED AFTER THE VERTICAL CONCRETE BARRIER RAIL IS CAST IF SLIP FORMING IS USED.

FOR PILE SPLICE DETAILS, SEE SHEET 4 OF 4.

FOR WING DETAILS, SEE SHEET 3 OF 4.

THE CONTRACTOR HAS THE OPTION TO OMIT THE LATERAL GUIDE IF APPROVED BY THE ENGINEER.

THE CONCRETE IN THE END BENT CAP OF END BENT NO. #2 SHALL CONTAIN SILICA FUME. SILICA FUME SHALL BE SUBSTITUTED FOR 5% OF THE PORTLAND CEMENT BY WEIGHT. IF THE OPTION OF ARTICLE 1024-1 OF THE STANDARD SPECIFICATIONS TO PARTIALLY SUBSTITUTE CLASS F FLY ASH FOR PORTLAND CEMENT IS EXERCISED, THEN THE RATE OF FLY ASH SUBSTITUTION SHALL BE REDUCED TO 1.0 LB OF FLY ASH PER 1.0 LB. NO PAYMENT WILL BE MADE FOR THIS SUBSTITUTION AS IT IS CONSIDERED INCIDENTAL TO THE VARIOUS PAY ITEMS.

INSTALL THE 4" DIA. DRAIN PIPE THROUGH THE WING WALL AS REQUIRED FOR REINFORCED BRIDGE APPROACH FILLS, SEE ROADWAY PLANS. REINFORCING STEEL IN THE WING WALL MAY BE SHIFTED AS NECESSARY TO CLEAR THE DRAIN PIPE.

| TOP OF PILE ELEVATIONS | |
|---|---|
| 1 | 3.08 |
| 2 | 2.92 |
| 3 | 2.75 |
| 4 | 2.59 |
| 5 | 2.42 |

PROJECT NO. 17BP.1.R.35
BERTIE COUNTY
STATION: 12+17.00 -L-

SHEET 2 OF 4

STATE OF NORTH CAROLINA
DEPARTMENT OF TRANSPORTATION
RALEIGH

SUBSTRUCTURE

END BENT No. 2

NORTH CAROLINA PROFESSIONAL SEAL 14045 ENGINEER TIMOTHY L. COGGINS
7/12/12

| REVISIONS | | | | | | | SHEET NO. |
|---|---|---|---|---|---|---|---|
| NO. | BY: | DATE: | NO. | BY: | DATE: | | S-9 |
| 1 | | | 3 | | | | TOTAL SHEETS |
| 2 | | | 4 | | | | 13 |

| | | |
|---|---|---|
| ASSEMBLED BY : M.D.PISO | DATE : 06-26-12 | |
| CHECKED BY : N.M.RUFFIN | DATE : 06-29-12 | |
| DRAWN BY : DGE 02/10 | | |
| CHECKED BY : MKT 02/10 | | |

12-JUL-2012 09:01
S:\DPG1\Tim\17BP.1.R.35\17BP.1.R.35_SD_EB.dgn
tcoggins

STD. NO. EB_30_90S

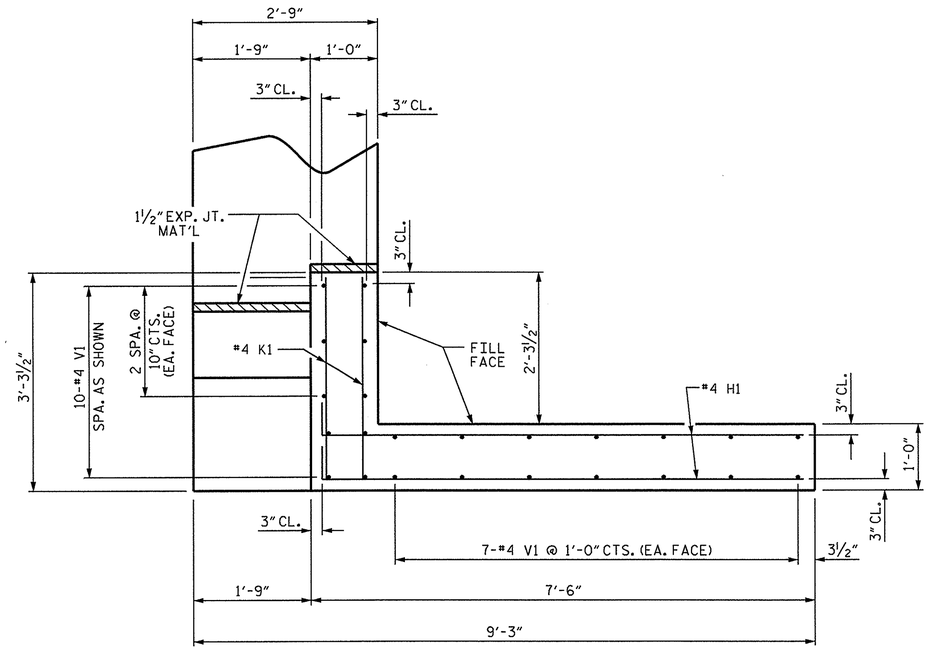


PLAN OF WING (W1)

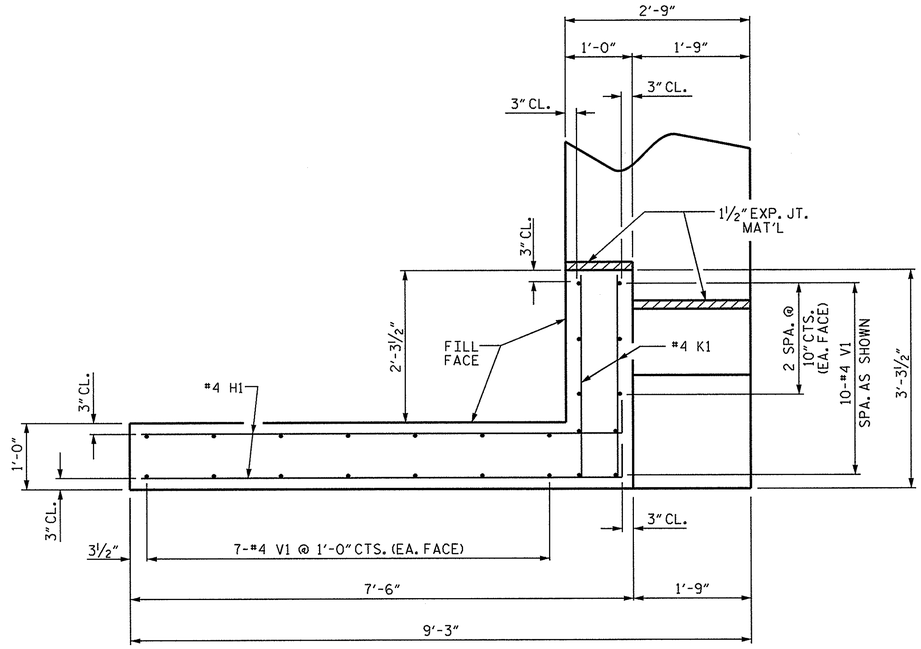


PLAN OF WING (W2)

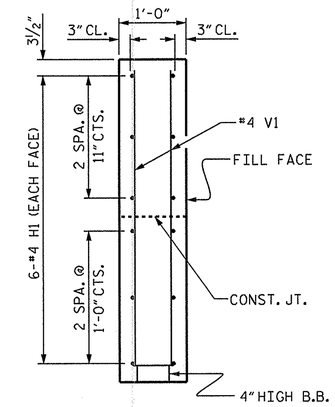


SECTION X-X

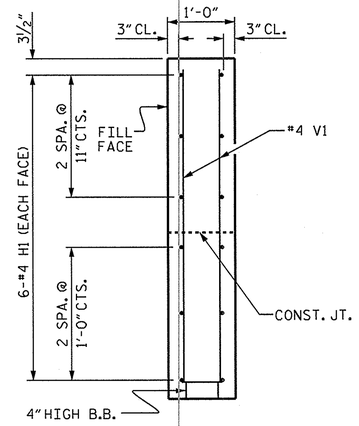


SECTION Y-Y

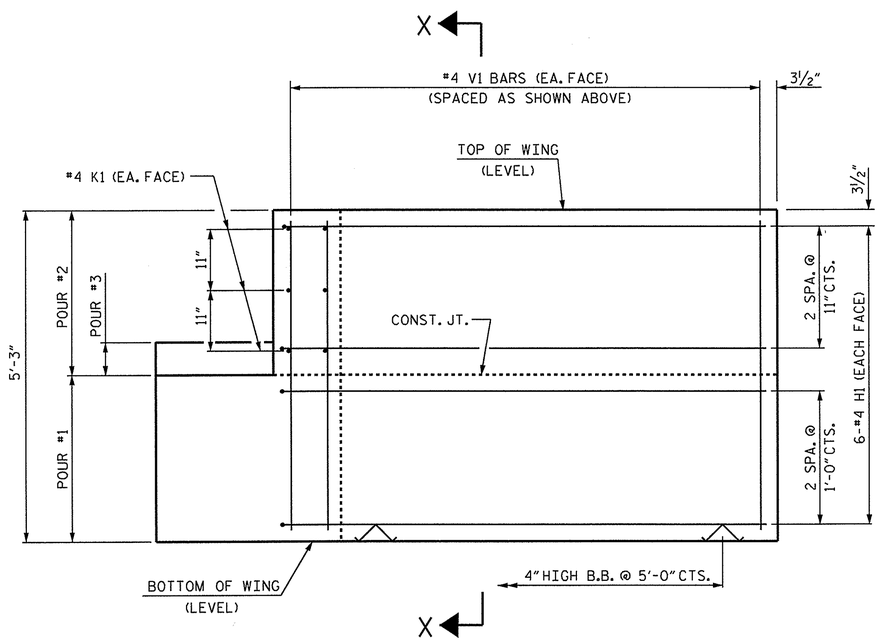


ELEVATION OF WING (W1)

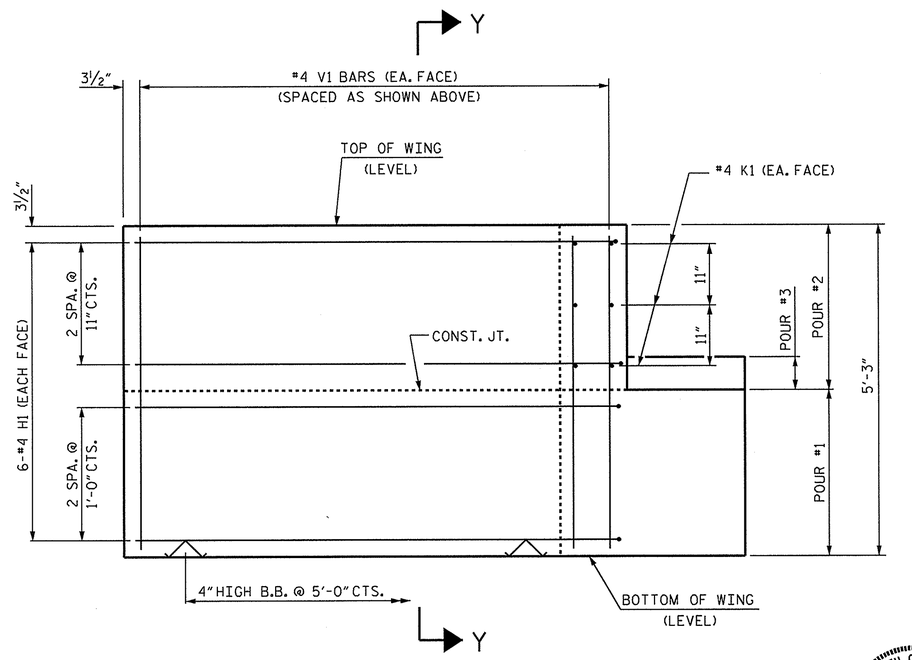


ELEVATION OF WING (W2)

WING DETAILS

| | | | |
|---|---|---|---|
| ASSEMBLED BY : | M.D.PISO | DATE : | 06-26-12 |
| CHECKED BY : | N.M.RUFFIN | DATE : | 06-29-12 |
| DRAWN BY : | DGE | 02/10 | |
| CHECKED BY : | MKT | 02/10 | |

12-JUL-2012 09:01
S:\DPG1\Tim\17BP.1.R.35\17BP.1.R.35_SD_EB.dgn
tcoggins

NORTH CAROLINA PROFESSIONAL SEAL 14045 ENGINEER TIMOTHY J. COGGINS
7/12/12

PROJECT NO. 17BP.1.R.35
BERTIE COUNTY
STATION: 12+17.00 -L-

SHEET 3 OF 4

STATE OF NORTH CAROLINA
DEPARTMENT OF TRANSPORTATION
RALEIGH

SUBSTRUCTURE
END BENT
WING DETAILS

| REVISIONS | | | | | | SHEET NO. |
|---|---|---|---|---|---|---|
| NO. | BY: | DATE: | NO. | BY: | DATE: | S-10 |
| 1 | | | 3 | | | TOTAL SHEETS |
| 2 | | | 4 | | | 13 |

STD. NO. EB_30_90S

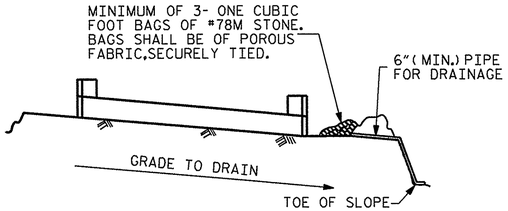


BAGGED STONE AND PIPE SHALL BE PLACED IMMEDIATELY AFTER COMPLETION OF END BENT EXCAVATION. PIPE MAY BE EITHER CONCRETE, CORRUGATED STEEL, CORRUGATED ALUMINUM ALLOY, OR CORRUGATED PLASTIC. PERFORATED PIPE WILL NOT BE ALLOWED.

BAGGED STONE SHALL REMAIN IN PLACE UNTIL THE ENGINEER DIRECTS THAT IT BE REMOVED. THE CONTRACTOR SHALL REMOVE AND DISPOSE OF SILT ACCUMULATIONS AT BAGGED STONE WHEN SO DIRECTED BY THE ENGINEER. BAGS SHALL BE REMOVED AND REPLACED WHENEVER THE ENGINEER DETERMINES THAT THEY HAVE DETERIORATED AND LOST THEIR EFFECTIVENESS.

NO SEPARATE PAYMENT WILL BE MADE FOR THIS WORK AND THE ENTIRE COST OF THIS WORK SHALL BE INCLUDED IN THE UNIT CONTRACT PRICE BID FOR THE SEVERAL PAY ITEMS.

## TEMPORARY DRAINAGE AT END BENT

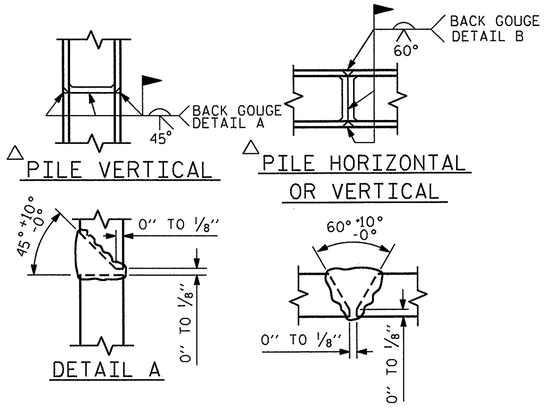


△ POSITION OF PILE DURING WELDING.

## PILE SPLICE DETAILS

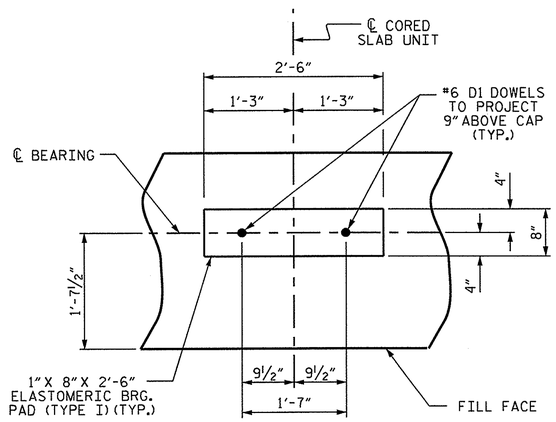


## DETAIL "A"

(END BENT No. 1 SHOWN, END BENT No. 2 SIMILAR BY ROTATION)

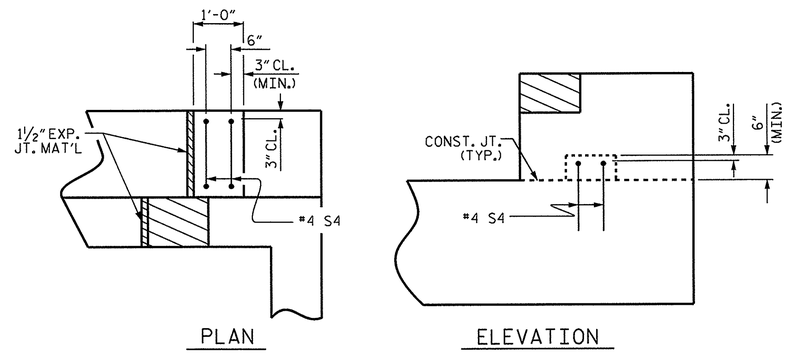


## LATERAL GUIDE DETAILS

(RIGHT LATERAL GUIDE SHOWN, LEFT END SIMILAR)

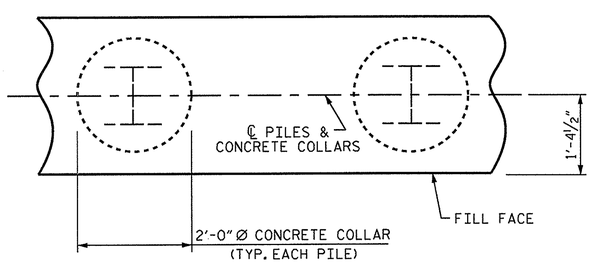


PLAN

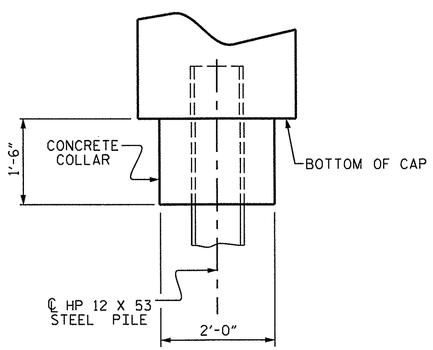


ELEVATION

## CORROSION PROTECTION FOR STEEL PILES DETAIL

(END BENT No. 1 SHOWN, END BENT No. 2 SIMILAR BY ROTATION)

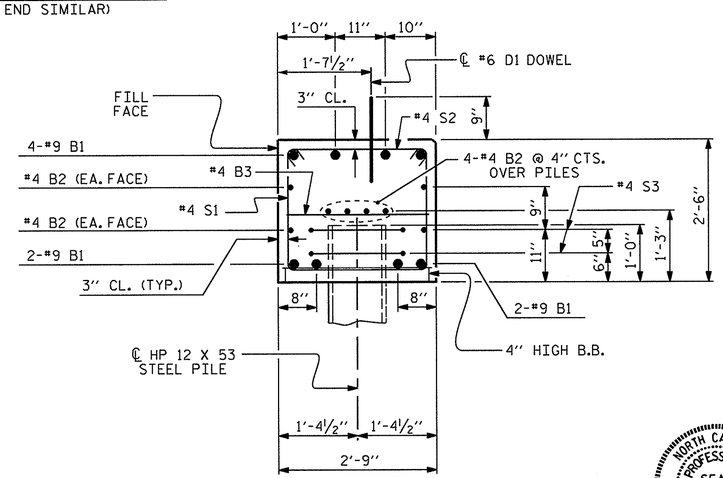


## SECTION A-A

(CONCRETE COLLAR NOT SHOWN FOR CLARITY. SEE "CORROSION PROTECTION FOR STEEL PILES DETAIL.")

### BAR TYPES

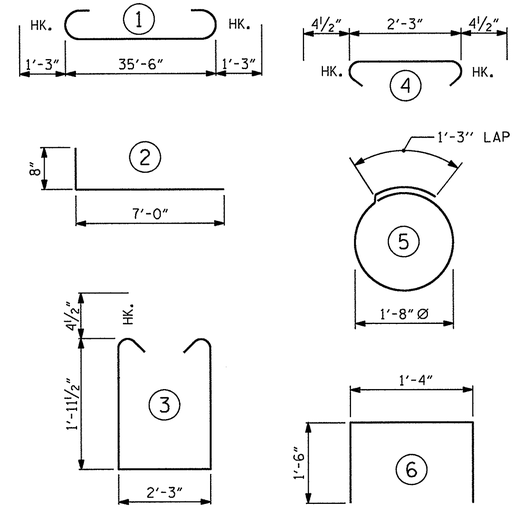


ALL BAR DIMENSIONS ARE OUT TO OUT.

| END BENT No. 1 | END BENT No. 2 |
|---|---|
| HP 12 X 53 STEEL PILES | HP 12 X 53 STEEL PILES |
| NO: 5 LIN. FT.= 360 | NO: 5 LIN. FT.= 370 |
| PILE REDRIVES EA. 2 | PILE REDRIVES EA. 2 |

### BILL OF MATERIAL FOR ONE END BENT

| BAR | NO. | SIZE | TYPE | LENGTH | WEIGHT |
|---|---|---|---|---|---|
| ✻B1 | 8 | #9 | 1 | 38'-0" | 1034 |
| ✻B2 | 16 | #4 | STR | 19'-1" | 204 |
| ✻B3 | 9 | #4 | STR | 2'-3" | 14 |
| ✻D1 | 20 | #6 | STR | 1'-6" | 45 |
| ✻H1 | 24 | #4 | 2 | 7'-8" | 123 |
| ✻K1 | 12 | #4 | STR | 2'-9" | 22 |
| ✻S1 | 46 | #4 | 3 | 6'-11" | 213 |
| ✻S2 | 46 | #4 | 4 | 3'-0" | 92 |
| ✻S3 | 10 | #4 | 5 | 6'-6" | 43 |
| ✻S4 | 4 | #4 | 6 | 4'-4" | 12 |
| ✻V1 | 48 | #4 | STR | 4'-8" | 150 |

✻EPOXY COATED REINFORCING STEEL (FOR ONE END BENT) 1952 LBS.

CLASS AA CONCRETE BREAKDOWN (FOR ONE END BENT)

| | | |
|---|---|---|
| POUR #1 | CAP, LOWER PART OF WINGS & COLLARS | 11.2 C.Y. |
| POUR #2 | UPPER PART OF WINGS | 2.0 C.Y. |
| POUR #3 | LATERAL GUIDES | 0.1 C.Y. |
| TOTAL CLASS AA CONCRETE | | 13.3 C.Y. |

PROJECT NO. 17BP.1.R.35
BERTIE COUNTY
STATION: 12+17.00 -L-

SHEET 4 OF 4

STATE OF NORTH CAROLINA
DEPARTMENT OF TRANSPORTATION
RALEIGH

SUBSTRUCTURE

END BENT No. 1 & 2 DETAILS

NORTH CAROLINA PROFESSIONAL SEAL 14045 ENGINEER TIMOTHY L. COGGINS
7/12/12

| REVISIONS | | | | | | SHEET NO. |
|---|---|---|---|---|---|---|
| NO. | BY: | DATE: | NO. | BY: | DATE: | S-11 |
| 1 | | | 3 | | | TOTAL SHEETS |
| 2 | | | 4 | | | 13 |

| | | |
|---|---|---|
| ASSEMBLED BY : | M.D.PISO | DATE : 06-26-12 |
| CHECKED BY : | N.M.RUFFIN | DATE : 06-29-12 |
| DRAWN BY : | DGE | 02/10 |
| CHECKED BY : | MKT | 02/10 |

12-JUL-2012 09:01
S:\DPG1\Tlm\17BP.1.R.35\17BP.1.R.35_SD_EB.dgn
tcoggins

STD. NO. EB_30_90S

NOTES :

FOR EARTH BERM ELEVATIONS, SEE GENERAL DRAWING.

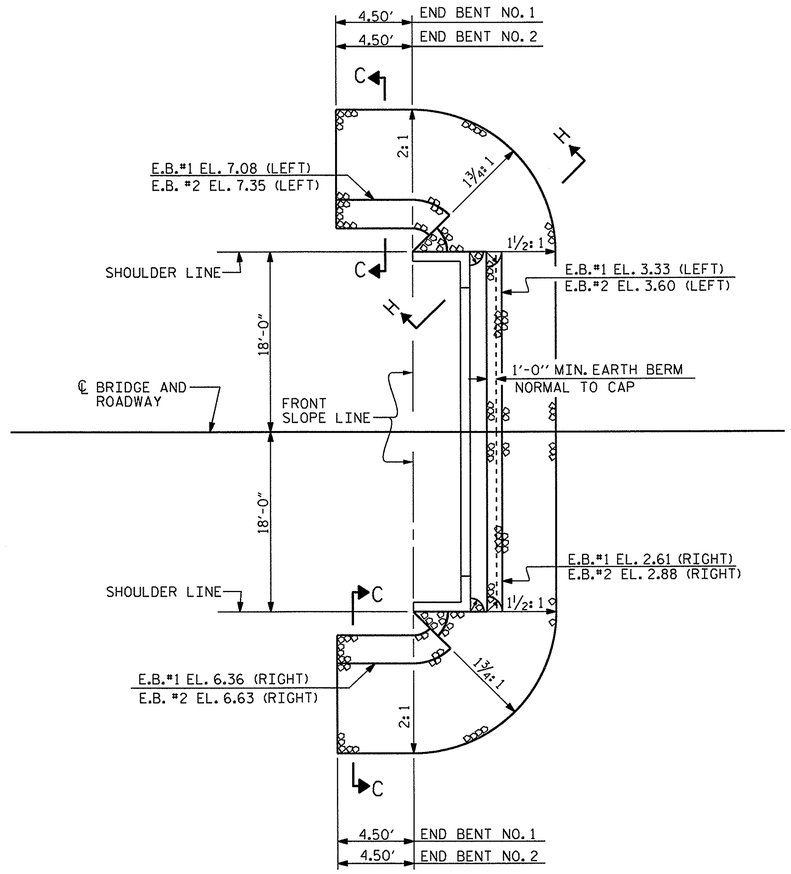


SHOULDER RIP RAP IS HIGHER THAN BERM RIP RAP

| ESTIMATED QUANTITIES | | |
|---|---|---|
| BRIDGE @ STA. 12+17.00 -L- | RIP RAP CLASS II (2'-0" THICK) | GEOTEXTILE FOR DRAINAGE |
| | TONS | SQUARE YARDS |
| END BENT 1 | 105 | 113 |
| END BENT 2 | 100 | 111 |

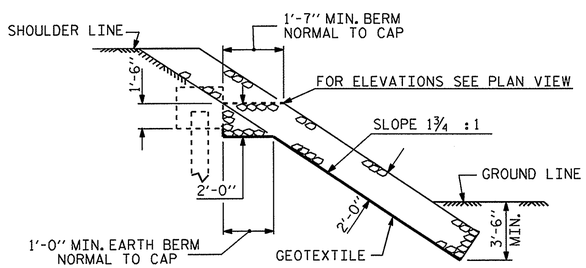


SECTION H-H

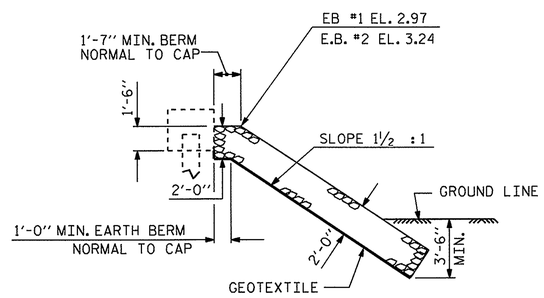


℄ SECTION

BERM RIP RAPPED

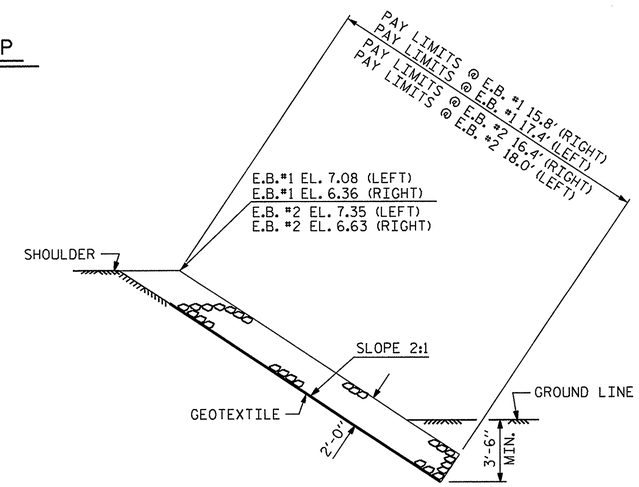


SECTION C-C

PROJECT NO. 17BP.1.R.35

BERTIE COUNTY

STATION: 12+17.00 -L-

STATE OF NORTH CAROLINA
DEPARTMENT OF TRANSPORTATION
RALEIGH

STANDARD

RIP RAP DETAILS

NORTH CAROLINA PROFESSIONAL SEAL 14045 ENGINEER TIMOTHY L. COGGINS

Timothy L. Coggins 7/12/12

| REVISIONS | | | | | | |
|---|---|---|---|---|---|---|
| NO. | BY: | DATE: | NO. | BY: | DATE: | SHEET NO. S-12 |
| 1 | | | 3 | | | TOTAL SHEETS 13 |
| 2 | | | 4 | | | |

| | | | |
|---|---|---|---|
| ASSEMBLED BY : | M.D.PISO | DATE : | 06-27-12 |
| CHECKED BY : | N.M.RUFFIN | DATE : | 06-29-12 |
| DRAWN BY : REK 1/84 | REV. 5/1/06R | TLA/GM | |
| CHECKED BY : RDU 1/84 | REV. 10/1/11 | MAA/GM | |
| | REV. 12/21/11 | MAA/GM | |

12-JUL-2012 09:01
S:\DPG1\Tim\17BP.1.R.35\17BP.1.R.35_SD_RR.dgn
tcoggins

STD. NO. RR1 (Sht 2)

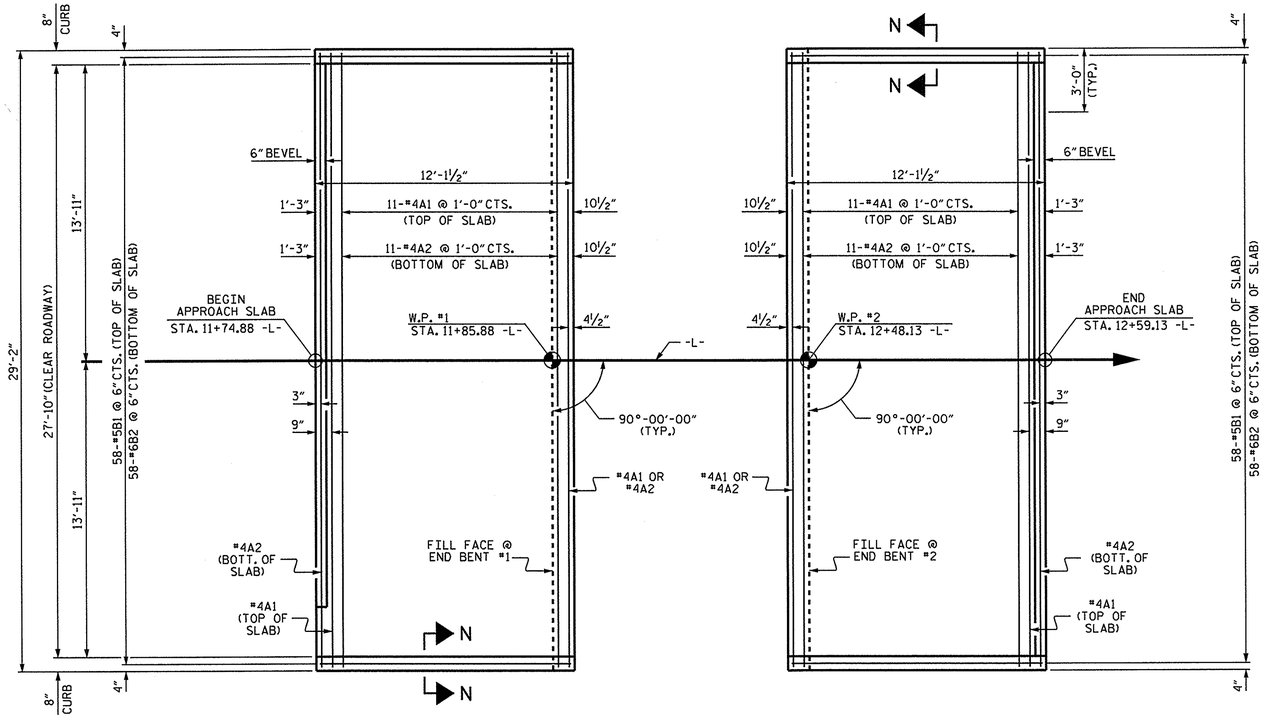


PLAN @ END BENT #1

PLAN @ END BENT #2

DIMENSIONS SHOWN ARE TYPICAL FOR BOTH APPROACH SLABS

## NOTES

FOR REINFORCED BRIDGE APPROACH FILL INCLUDING GEOTEXTILE, IMPERMEABLE GEOMEMBRANE, 4"Ø DRAINAGE PIPE, #78M STONE, AND SELECT MATERIAL, SEE ROADWAY PLANS.

AREA BETWEEN THE WINGWALL AND APPROACH SLAB SHALL BE GRADED TO DRAIN THE WATER AWAY FROM THE FILL FACE OF THE BRIDGE AND SHALL BE PAVED. SEE ROADWAY PLANS.

APPROACH SLAB GROOVING IS NOT REQUIRED.

## BILL OF MATERIAL

### APPROACH SLAB AT EB #1

| BAR | NO. | SIZE | TYPE | LENGTH | WEIGHT |
|---|---|---|---|---|---|
| * A1 | 13 | #4 | STR | 28'-10" | 250 |
| A2 | 13 | #4 | STR | 28'-10" | 250 |
| * B1 | 58 | #5 | STR | 11'-2" | 676 |
| B2 | 58 | #6 | STR | 11'-8" | 1016 |
| REINFORCING STEEL | | | | LBS. | 1266 |
| * EPOXY COATED REINFORCING STEEL | | | | LBS. | 926 |
| CLASS AA CONCRETE | | | | C.Y. | 16.9 |

### APPROACH SLAB AT EB #2

| BAR | NO. | SIZE | TYPE | LENGTH | WEIGHT |
|---|---|---|---|---|---|
| * A1 | 13 | #4 | STR | 28'-10" | 250 |
| A2 | 13 | #4 | STR | 28'-10" | 250 |
| * B1 | 58 | #5 | STR | 11'-2" | 676 |
| B2 | 58 | #6 | STR | 11'-8" | 1016 |
| REINFORCING STEEL | | | | LBS. | 1266 |
| * EPOXY COATED REINFORCING STEEL | | | | LBS. | 926 |
| CLASS AA CONCRETE | | | | C.Y. | 16.9 |

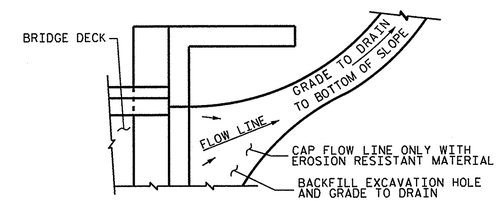


NOTE: IF THE APPROACH SLAB IS NOT CONSTRUCTED IMMEDIATELY AFTER THE BACKFILLING OF THE END BENT EXCAVATION, GRADE TO DRAIN TO THE BOTTOM OF THE SLOPE AND PROVIDE EROSION RESISTANT MATERIAL, SUCH AS FIBERGLASS ROVING OR AS DIRECTED BY THE ENGINEER TO PREVENT SOIL EROSION AND TO PROTECT THE AREA ADJACENT TO THE STRUCTURE. THE CONTRACTOR WILL BE REQUIRED TO REMOVE THESE MATERIALS PRIOR TO CONSTRUCTION OF THE APPROACH SLAB.

TEMPORARY DRAINAGE DETAIL

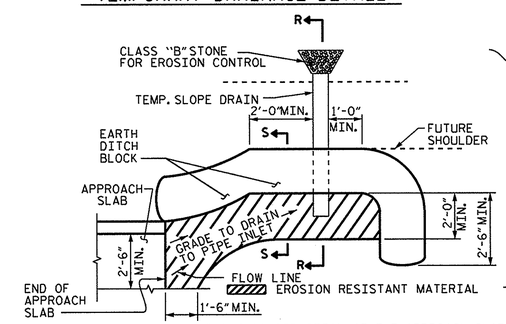


NOTE: IMMEDIATELY AFTER THE CONSTRUCTION OF THE APPROACH SLAB, THE CONTRACTOR SHALL PROVIDE TEMPORARY BERM AND SLOPE DRAIN. CONTRACTOR SHALL GRADE TO PIPE INLET AND PROVIDE EROSION RESISTANT MATERIAL AS SHOWN. THE EROSION RESISTANT MATERIAL SHALL BE EITHER 1) ASPHALT PLANT MIX, TYPE 1 OR TYPE 2, MIN. 2" DEPTH, 2) EROSION CONTROL MAT, OR 3) CONCRETE, AS DIRECTED BY THE ENGINEER. THE SLOPE DRAIN SHALL CONSIST OF A NON-PERFORATED TEMPORARY DRAINAGE PIPE, 12 INCHES IN DIAMETER.

PLAN VIEW

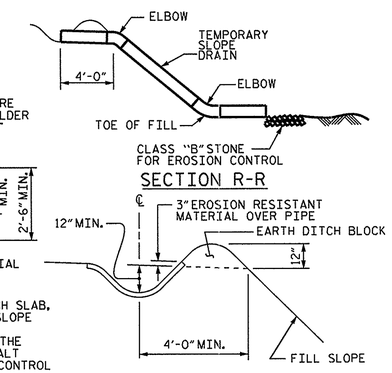


SECTION S-S

## TEMPORARY BERM AND SLOPE DRAIN DETAILS

(TO BE USED WHEN SHOULDER BERM GUTTER IS REQUIRED)

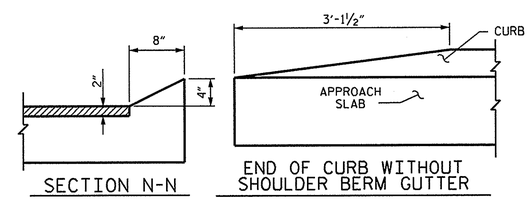


SECTION N-N

END OF CURB WITHOUT SHOULDER BERM GUTTER

## CURB DETAILS

PROJECT NO. 17BP.1.R.35

BERTIE COUNTY

STATION: 12+17.00 -L-

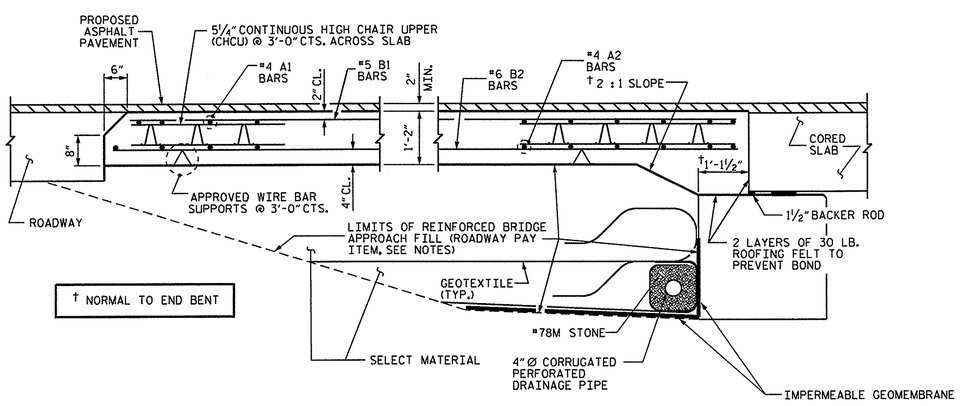


† NORMAL TO END BENT

SECTION THRU SLAB

| SPLICE LENGTHS | | |
|---|---|---|
| BAR SIZE | EPOXY COATED | UNCOATED |
| #4 | 2'-0" | 1'-9" |
| #5 | 2'-6" | 2'-2" |
| #6 | 3'-10" | 2'-7" |

NORTH CAROLINA PROFESSIONAL SEAL 14045 ENGINEER TIMOTHY L. COGGINS

7/12/12

STATE OF NORTH CAROLINA
DEPARTMENT OF TRANSPORTATION
RALEIGH

STANDARD
BRIDGE APPROACH SLAB
FOR PRESTRESSED CONCRETE
CORED SLAB UNIT
(SUB-REGIONAL TIER)
90° SKEW

| REVISIONS | | | | | | SHEET NO. |
|---|---|---|---|---|---|---|
| NO. | BY: | DATE: | NO. | BY: | DATE: | S-13 |
| 1 | | | 3 | | | TOTAL SHEETS |
| 2 | | | 4 | | | 13 |

STD. NO. BAS_30_90S

| | | |
|---|---|---|
| ASSEMBLED BY : M.D.PISO | DATE : 06-26-12 | |
| CHECKED BY : N.M.RUFFIN | DATE : 06-29-12 | |
| DRAWN BY : SHS/MAA 5-09 | REV. 12-11 | MAA/AAC |
| CHECKED BY : BCH 5-09 | | |

12-JUL-2012 09:01
S:\DPGI\Tim\17BP.1.R.35\17BP.1.R.35_SD_AS.dgn
tcoggins