DocuSign Envelope ID: EC23A682-EEBE-4FC2-9255-4B2392E15953

PROJECT REFERENCE NO.	SHEET NO.
17BP.1.R.67	2-B

Prepared by
URS
URS Corporation - North Carolina
1600 Perimeter Park Drive, Suite 400
Morrisville, NC 27560
PHONE: (919)461-1100 FAX: (919)461-1415
NC LIC.# C-2243

9/23/2015
NORTH CAROLINA PROFESSIONAL SEAL 19391 ENGINEER JOHN A. BONE
DocuSigned by:
John A. Bone
6272EC769D5A4E0...

STEEL SHEET PILE RETAINING WALL DETAILS

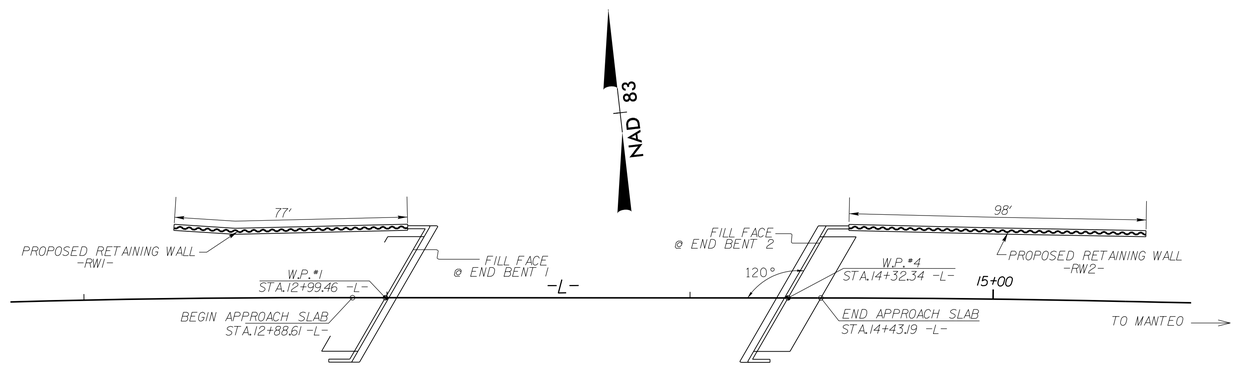

PLAN

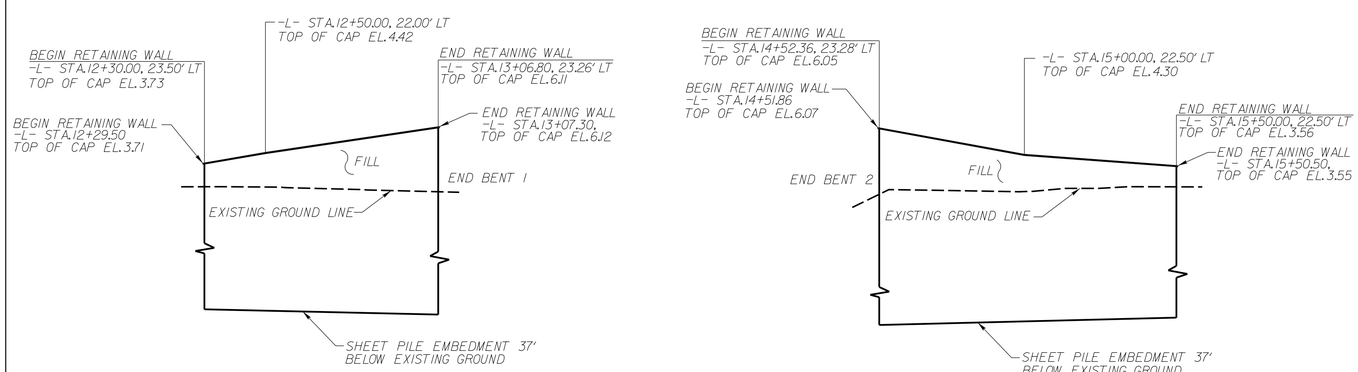

-RW1- -RW2-

ELEVATION

TOTAL BILL OF MATERIAL

18" STEEL SHEET PILE (PZ-27)
RETAINING WALLS ..... 655 SQ. FT.

NOTES

FOR STEEL SHEET PILE RETAINING WALL, SEE SPECIAL PROVISIONS.

FOR CRANE SAFETY, SEE SPECIAL PROVISIONS.

FOR FALSEWORK AND FORMWORK, SEE SPECIAL PROVISIONS.

FOR SUBMITTAL OF WORKING DRAWING, SEE SPECIAL PROVISIONS.

THE RETAINING WALL SHALL BE CONSTRUCTED IN ACCORDANCE WITH SECTION 452 OF THE STANDARD SPECIFICATIONS.

THE RETAINING WALL SHALL BE MEASURED AND PAID AS THE ACTUAL NUMBER OF SQUARE FEET OF EXPOSED FACE AREA INCORPORATED INTO THE COMPLETED RETAINING WALL. THE RETAINING WALL HEIGHT IS MEASURED AS THE DIFFERENCE BETWEEN THE TOP AND BOTTOM OF THE RETAINING WALL. THE TOP OF THE RETAINING WALL IS DEFINED AS THE TOP OF THE CONCRETE CAP. THE BOTTOM OF THE RETAINING WALL IS DEFINED AS THE EXISTING GROUND LINE.

CLASS AA CONCRETE SHALL BE USED IN THE CAST-IN-PLACE CAP AND SHALL CONTAIN CALCIUM NITRITE CORROSION INHIBITOR.

VERTICAL GROOVED CONTRACTION JOINTS, 1/2" IN DEPTH, SHALL BE TOOLED IN ALL EXPOSED FACES OF THE CONCRETE CAP AND SPACED A MAXIMUM OF 10 FEET.

INSTALL THE SHEETING TO THE REQUIRED EMBEDMENT AS SHOWN ON THE PLANS.

STEEL SHEET PILING SHALL CONFORM TO THE REQUIREMENTS OF ASTM A690 AND SHALL BE GALVANIZED IN ACCORDANCE WITH THE STANDARD SPECIFICATIONS.

STEEL SHEET PILING SHALL BE HOT ROLLED.

THE SCOUR CRITICAL ELEVATION FOR THE RETAINING WALL IS -5 FT. THE SCOUR CRITICAL ELEVATION IS USED BY MAINTENANCE FORCES TO MONITOR POSSIBLE SCOUR PROBLEMS DURING THE LIFE OF THE STRUCTURE.

USE SELECT MATERIAL CLASS III, ACCORDING TO SECTION 1016 OF THE NCDOT STANDARD SPECIFICATIONS, AS BACKFILL BEHIND THE RETAINING WALL. NO SEPARATE PAYMENT WILL BE MADE FOR THIS ITEM. ALL MATERIALS, EQUIPMENT OR LABOR FOR PLACING AND COMPACTING THIS MATERIAL SHALL BE INCLUDED IN THE CONTRACT BID PRICE FOR SQUARE FOOT OF 18" STEEL SHEET PILE RETAINING WALLS.

THE FINISH GRADE OF THE BACK FILL SHALL BE GRADED TO PROVIDE ADEQUATE DRAINAGE AS DIRECTED BY THE ENGINEER.

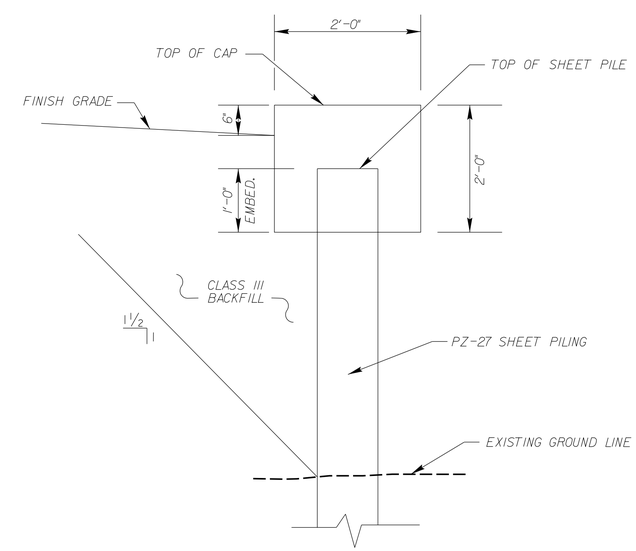

RETAINING WALL CAP DETAIL

8/21/2015
R:\Roadway\Proj\Hyde56_rdy_psh_RW_Details.dgn
jerry.lewis@pp