DocuSign Envelope ID: 0B961D4A-F5EF-4422-9475-DED681204231

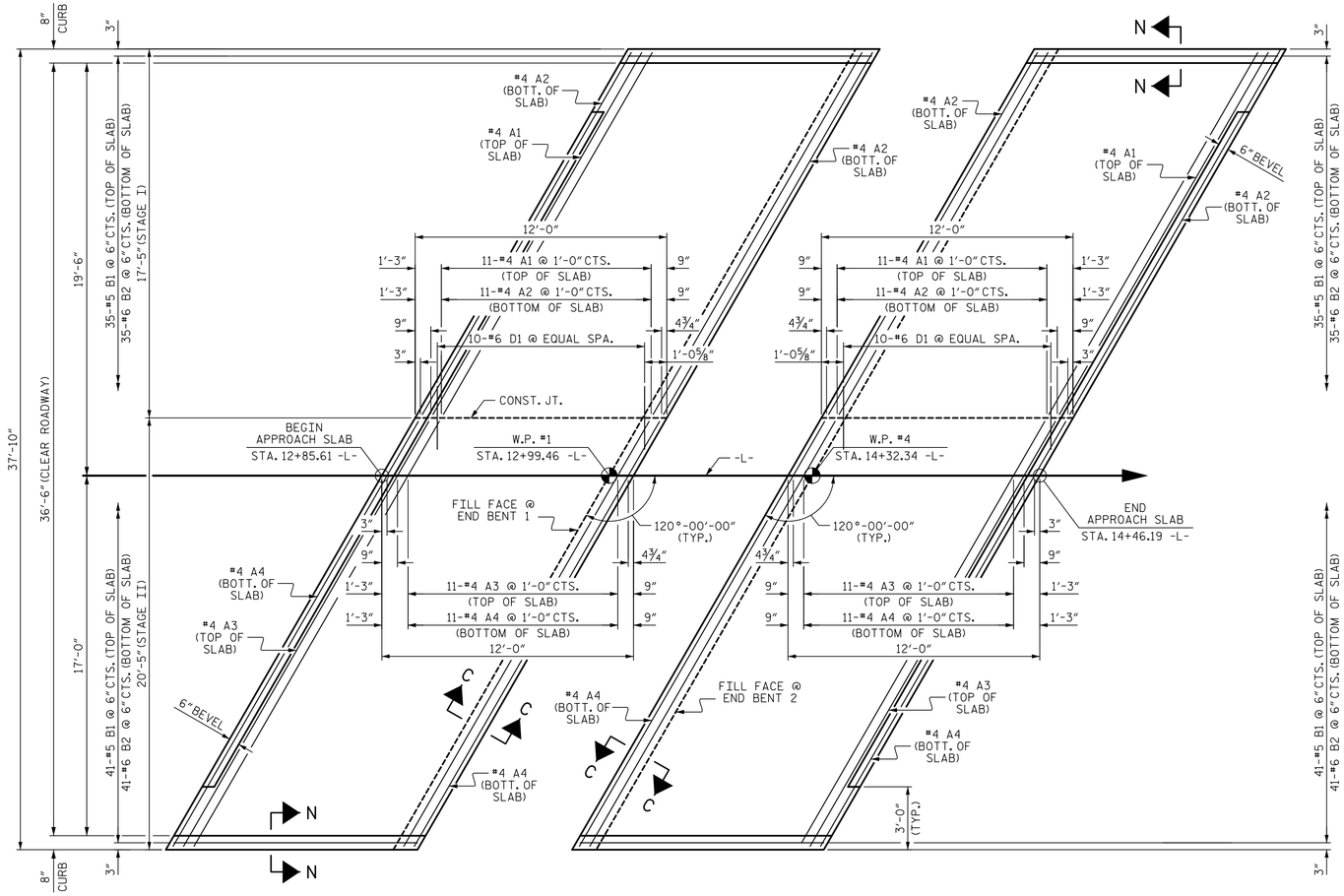


PLAN @ END BENT 1

PLAN @ END BENT 2

DIMENSIONS SHOWN ARE TYPICAL FOR BOTH APPROACH SLABS

| BILL OF MATERIAL | | | | | |
|---|---|---|---|---|---|
| APPROACH SLAB AT EB #1 STAGE I | | | | | |
| BAR | NUMBER | SIZE | TYPE | LENGTH | WEIGHT |
| ✳ A1 | 12 | #4 | STR. | 19'-8" | 158 |
| A2 | 13 | #4 | STR. | 19'-8" | 171 |
| ✳ B1 | 35 | #5 | STR. | 11'-1" | 405 |
| B2 | 35 | #6 | STR. | 11'-7" | 609 |
| ✳ D1 | 10 | #6 | STR. | 3'-0" | 45 |
| REINFORCING STEEL | | | = | | 780 LBS. |
| ✳ EPOXY COATED REINFORCING STEEL | | | = | | 608 LBS. |
| CLASS AA CONCRETE | | | = | | 10.5 C.Y. |

| BILL OF MATERIAL | | | | | |
|---|---|---|---|---|---|
| PPROACH SLAB AT EB #2 STAGE I | | | | | |
| BAR | NUMBER | SIZE | TYPE | LENGTH | WEIGHT |
| ✳ A1 | 12 | #4 | STR. | 19'-8" | 158 |
| A2 | 13 | #4 | STR. | 19'-8" | 171 |
| ✳ B1 | 35 | #5 | STR. | 11'-1" | 405 |
| B2 | 35 | #6 | STR. | 11'-7" | 609 |
| ✳ D1 | 10 | #6 | STR. | 3'-0" | 45 |
| REINFORCING STEEL | | | = | | 780 LBS. |
| ✳ EPOXY COATED REINFORCING STEEL | | | = | | 608 LBS. |
| CLASS AA CONCRETE | | | = | | 10.5 C.Y. |

| BILL OF MATERIAL | | | | | |
|---|---|---|---|---|---|
| APPROACH SLAB AT EB #1 STAGE II | | | | | |
| BAR | NUMBER | SIZE | TYPE | LENGTH | WEIGHT |
| ✳ A3 | 12 | #4 | STR. | 23'-2" | 186 |
| A4 | 13 | #4 | STR. | 23'-2" | 201 |
| ✳ B1 | 41 | #5 | STR. | 11'-1" | 474 |
| B2 | 41 | #6 | STR. | 11'-7" | 713 |
| REINFORCING STEEL | | | = | | 914 LBS. |
| ✳ EPOXY COATED REINFORCING STEEL | | | = | | 660 LBS. |
| CLASS AA CONCRETE | | | = | | 12.5 C.Y. |

| BILL OF MATERIAL | | | | | |
|---|---|---|---|---|---|
| APPROACH SLAB AT EB #2 STAGE II | | | | | |
| BAR | NUMBER | SIZE | TYPE | LENGTH | WEIGHT |
| ✳ A3 | 12 | #4 | STR. | 23'-2" | 186 |
| A4 | 13 | #4 | STR. | 23'-2" | 201 |
| ✳ B1 | 41 | #5 | STR. | 11'-1" | 474 |
| B2 | 41 | #6 | STR. | 11'-7" | 713 |
| REINFORCING STEEL | | | = | | 914 LBS. |
| ✳ EPOXY COATED REINFORCING STEEL | | | = | | 660 LBS. |
| CLASS AA CONCRETE | | | = | | 12.5 C.Y. |

| ELASTOMERIC CONCRETE | |
|---|---|
| END BENT NO. | ELASTOMERIC CONCRETE ✳ (CU. FT.) |
| 1 | 13.3 |
| 2 | 13.3 |
| TOTAL | 26.6 |

✳ BASED ON THE MINIMUM BLOCKOUT SHOWN.

## NOTES

FOR REINFORCED BRIDGE APPROACH FILL INCLUDING GEOTEXTILE, IMPERMEABLE GEOMEMBRANE, 4" Ø DRAINAGE PIPE, #78M STONE, AND SELECT MATERIAL, SEE ROADWAY PLANS.

AREA BETWEEN THE WINGWALL AND APPROACH SLAB SHALL BE GRADED TO DRAIN THE WATER AWAY FROM THE FILL FACE OF THE BRIDGE AND SHALL BE PAVED. SEE ROADWAY PLANS.

FOR JOINT DETAILS, SEE "PRESTRESSED CONCRETE CORED SLAB UNIT" SHEETS.

APPROACH SLAB GROOVING IS REQUIRED.

DOWEL BARS TO BE PLACED PRIOR TO POURING STAGE 1 CONCRETE.

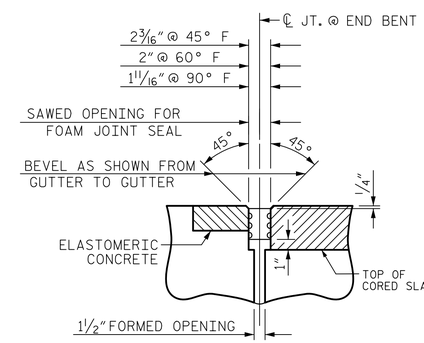


SECTION C-C

FOAM JOINT SEAL (EXPANSION)

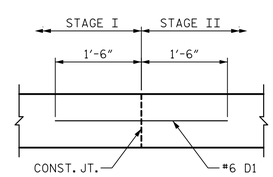


DOWEL DETAIL

(ELEVATION VIEW)

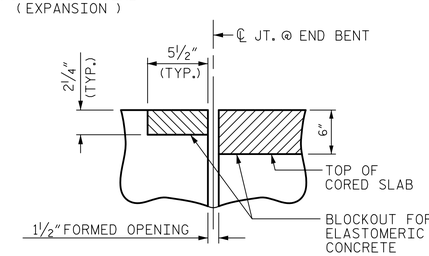


SECTION C-C

FOAM JOINT SEAL (PRE-SAWED ELASTOMERIC CONCRETE DIMENSIONS)

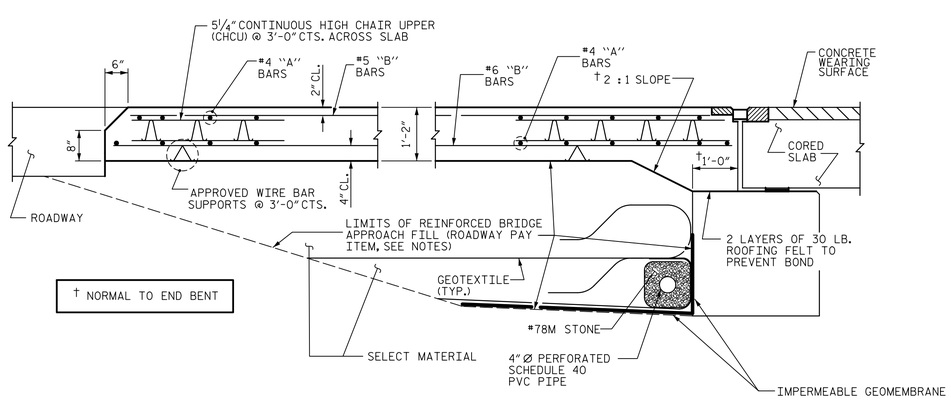


† NORMAL TO END BENT

SECTION THRU SLAB

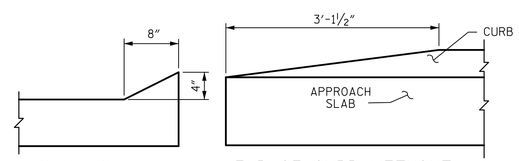


SECTION N-N

END OF CURB WITHOUT SHOULDER BERM GUTTER

CURB DETAILS

| SPLICE LENGTHS | | |
|---|---|---|
| BAR SIZE | EPOXY COATED | UNCOATED |
| #4 | 2'-0" | 1'-9" |
| #5 | 2'-6" | 2'-2" |
| #6 | 3'-10" | 2'-7" |

Prepared by
URS
URS Corporation – North Carolina
1600 Perimeter Park Drive, Suite 400
Morrisville, NC 27560
PHONE: (919) 461-1100 FAX: (919) 461-1415
NC LIC. # C-2243

PROJECT NO. 17BP.1.R.67

HYDE COUNTY

STATION: 13+65.90 -L-

SHEET 1 OF 2

STATE OF NORTH CAROLINA
DEPARTMENT OF TRANSPORTATION
RALEIGH

STANDARD
BRIDGE APPROACH SLAB
FOR PRESTRESSED CONCRETE
CORED SLAB UNIT
(SUB-REGIONAL TIER)
120° SKEW

6/22/2015

NORTH CAROLINA PROFESSIONAL SEAL 039173 ENGINEER MATTHEW K. TOM

DocuSigned by: Matthew K. Tom
74B6BF30B64442A...

| REVISIONS | | | | | | SHEET NO. |
|---|---|---|---|---|---|---|
| NO. | BY: | DATE: | NO. | BY: | DATE: | S-39 |
| 1 | | | 3 | | | TOTAL SHEETS |
| 2 | | | 4 | | | 40 |

| | | | |
|---|---|---|---|
| ASSEMBLED BY : | M. K. TOM | DATE : | 12/19/14 |
| CHECKED BY : | R. L. WHITCHER | DATE : | 1/7/15 |
| DESIGNED BY : | M. K. TOM | DATE : | 12/19/14 |
| DRAWN BY : SHS/MAA 5-09 | REV. 12-11 | MAA/AAC | |
| CHECKED BY : BCH 5-09 | REV. 8-14 | MAA/TMG | |

6/17/2015
S:\Hyde 56\Structures\Submittals\2015_05_19 FinalDesign and Tracings\Drawings\39 Hyde 56_AS_01.dgn
matt_tom

STD. NO. BAS_39_120S