DocuSign Envelope ID: 0B961D4A-F5EF-4422-9475-DED681204231

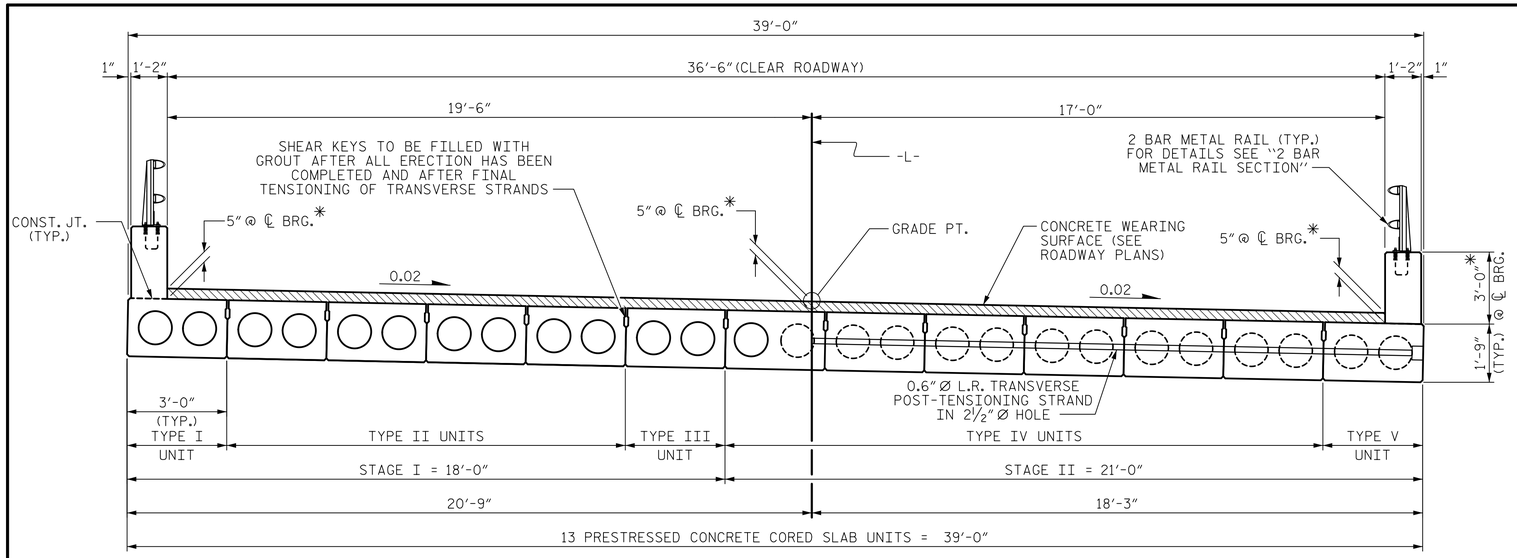

TYPICAL SECTION

*-THE MAXIMUM BARRIER RAIL HEIGHT AND CONCRETE WEARING SURFACE THICKNESS IS SHOWN. THE HEIGHT OF THE BARRIER RAIL AND CONCRETE WEARING SURFACE THICKNESS VARIES WHILE THE TOP OF THE BARRIER RAIL FOLLOWS THE PROFILE OF THE GUTTERLINE. FOR RAIL HEIGHT DETAILS AND CONCRETE WEARING SURFACE THICKNESS SEE THE "2 BAR METAL RAIL SECTION" DETAIL.

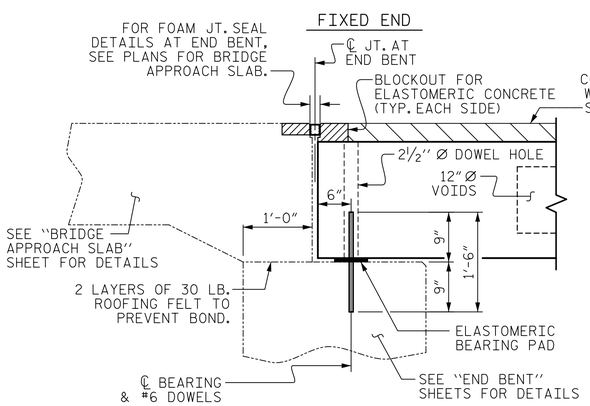

SECTION AT END BENT

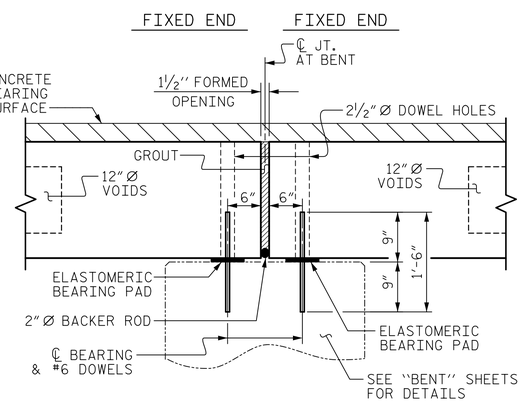

SECTION AT BENT

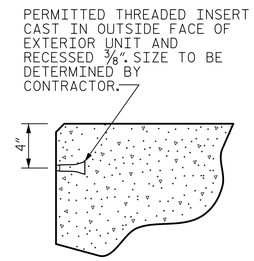

THREADED INSERT DETAIL

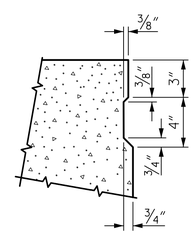

SHEAR KEY DETAIL

NOTE: OMIT SHEAR KEY ON OUTSIDE FACE OF EXTERIOR CORED SLABS.

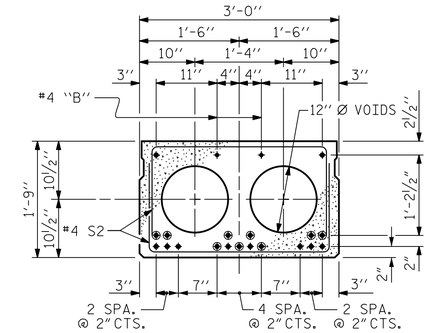

INTERIOR SLAB SECTION (35' UNIT)

(10 STRANDS REQUIRED)

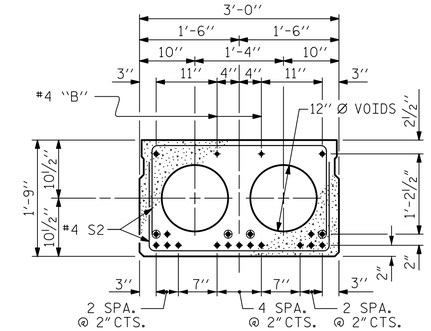

INTERIOR SLAB SECTION (45' UNIT)

(15 STRANDS REQUIRED)

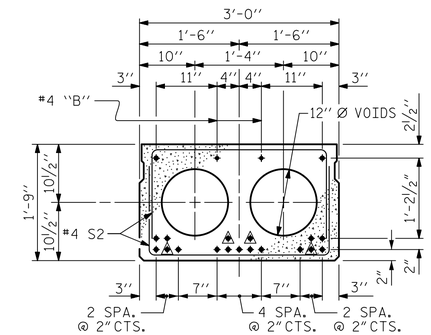

INTERIOR SLAB SECTION (50' UNIT)

(19 STRANDS REQUIRED)

0.6" Ø LOW RELAXATION STRAND LAYOUT

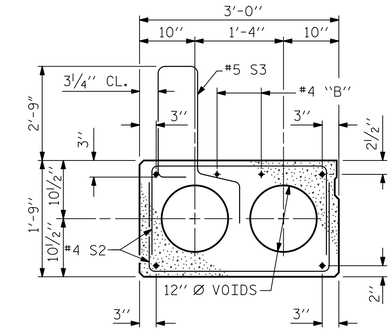

EXT. SLAB SECTION

(FOR PRESTRESSED STRAND LAYOUT, SEE INTERIOR SLAB SECTION.)

▲ BOND SHALL BE BROKEN ON THESE STRANDS FOR A DISTANCE OF 6'-0" FROM END OF CORED SLAB UNIT. SEE STANDARD SPECIFICATIONS, ARTICLE 1078-7.

◉ OPTIONAL FULL LENGTH DEBONDED STRANDS. THESE STRANDS ARE NOT REQUIRED. IF THE FABRICATOR CHOOSES TO INCLUDE THESE STRANDS IN THE CORED SLAB UNIT, THE STRANDS SHALL BE DEBONDED FOR THE FULL LENGTH OF THE UNIT AT NO ADDITIONAL COST. SEE STANDARD SPECIFICATIONS, ARTICLE 1078-7.

DEBONDING LEGEND

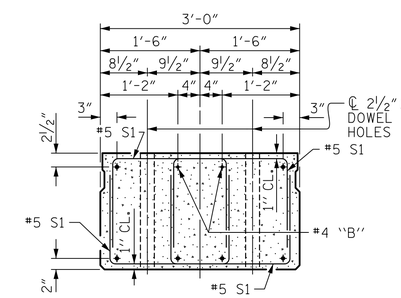

END ELEVATION

SHOWING PLACEMENT OF DOUBLE STIRRUPS AND LOCATION OF DOWEL HOLES. (STRAND LAYOUT NOT SHOWN.) INTERIOR SLAB UNIT SHOWN-EXTERIOR SLAB UNIT SIMILAR EXCEPT SHEAR KEY LOCATION.

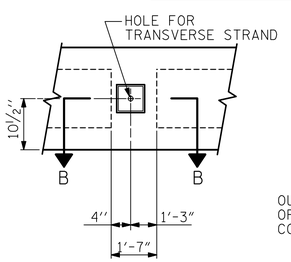

ELEVATION VIEW

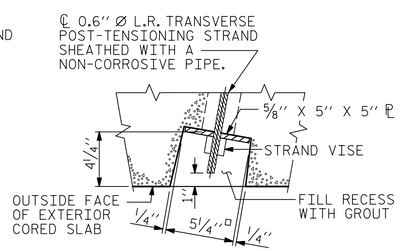

SECTION B-B

GROUTED RECESS AT END OF POST-TENSIONED STRAND OF CORED SLABS

(STAGE II)

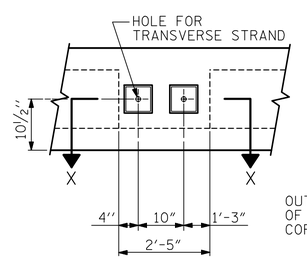

ELEVATION VIEW

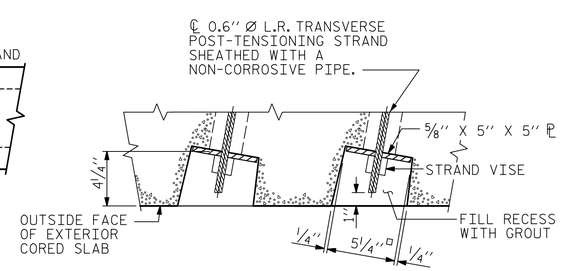

SECTION X-X

GROUTED RECESS AT END OF POST-TENSIONED STRAND OF CORED SLABS

(STAGE I)

ASSEMBLED BY : L. H. JAMISON		DATE : 11/6/14	
CHECKED BY : M. K. TOM		DATE : 11/6/14	
DESIGNED BY : M. K. TOM		DATE : 9/12/14	
DRAWN BY : DGE 5/09	REV. 12/11	MAA/AAC	
CHECKED BY : BCH 6/09	REV. 8/14	MAA/TMG	

PROJECT NO. 17BP.1.R.67
HYDE COUNTY
STATION: 13+65.90 -L-

STATE OF NORTH CAROLINA
DEPARTMENT OF TRANSPORTATION
RALEIGH

STANDARD
3'-0" X 1'-9"
PRESTRESSED CONCRETE CORED SLAB UNIT
120° SKEW

Prepared by
URS
URS Corporation – North Carolina
1600 Perimeter Park Drive, Suite 400
Morrisville, NC 27560
PHONE: (919) 461-1100 FAX: (919) 461-1415
NC LIC.: C-2243

6/22/2015
NORTH CAROLINA PROFESSIONAL SEAL 039173 ENGINEER MATTHEW K. TOM
DocuSigned by: Matthew K. Tom
749E8F30B64442A...

REVISIONS						SHEET NO.
NO.	BY:	DATE:	NO.	BY:	DATE:	S-8
1			3			TOTAL SHEETS
2			4			40

STD. NO. 21" PCS2_39_120S

6/17/2015
S:\Hyde 56\Structures\Submittals\2015_05_19 Final Design and Tracings\Drawings\08 Hyde 56_TS_01.dgn
matt_tom