09/08/99

TIP PROJECT: 17BP.1.R.23

See Sheet 1-A For Index of Sheets

STATE OF NORTH CAROLINA
DIVISION OF HIGHWAYS

STATE	STATE PROJECT REFERENCE NO.	SHEET NO.	TOTAL SHEETS
N.C.	17BP.1.R.23	1	

STATE PROJ. NO.	F.A. PROJ. NO.	DESCRIPTION
17BP.1.R.23		PE, UTIL., R/W
		CONST.

BERTIE COUNTY

LOCATION: BRIDGE NO. 17 OVER LOOSING SWAMP ON SR 1200 (HEXLENA RD.)

TYPE OF WORK: GRADING, DRAINAGE, PAVING & STRUCTURE

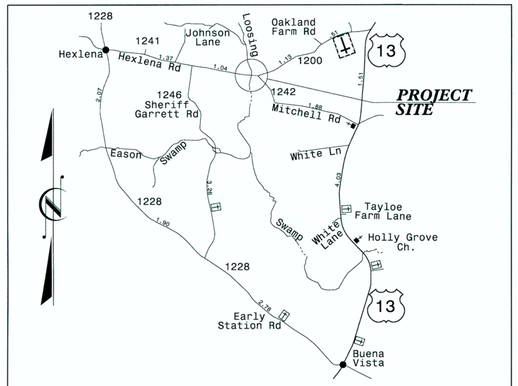

VICINITY MAP

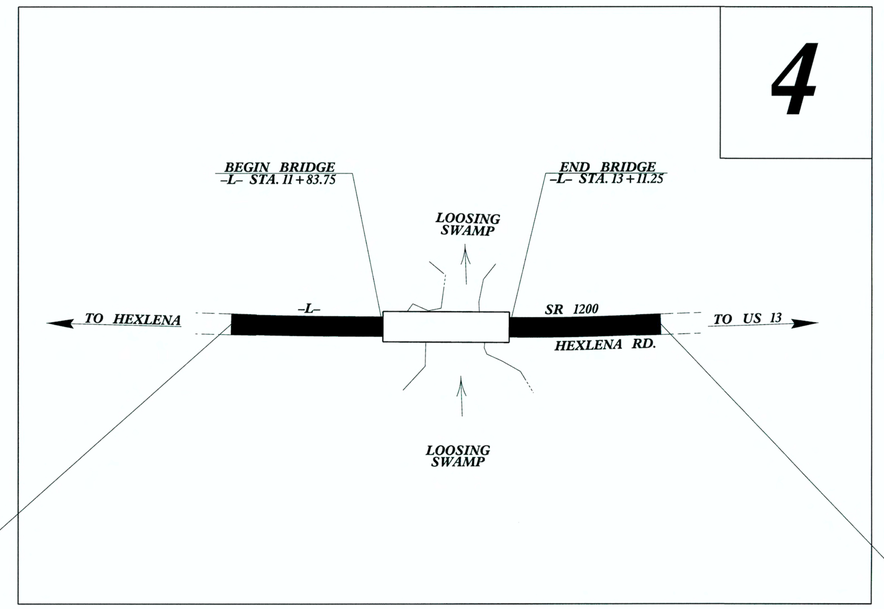

BEGIN PROJECT 17BP.1.R.23
-L- STA. 10+35.00

END PROJECT 17BP.1.R.23
-L- STA. 15+50.55

NAD 83

CLEARING ON THIS PROJECT SHALL BE PERFORMED TO THE LIMITS ESTABLISHED BY METHOD II - MODIFIED.
THIS PROJECT IS NOT WITHIN ANY MUNICIPAL BOUNDARIES.

CONTRACT:

GRAPHIC SCALES

50 25 0 50 100
PLANS

50 25 0 50 100
PROFILE (HORIZONTAL)

10 5 0 10 20
PROFILE (VERTICAL)

DESIGN DATA

ADT 2010 = 570
ADT 2032 = 1095
DHV = 10 %
D = 50 %
T = 8 % *
V = 55 MPH
* TTST = 3% DUAL = 5%
FUNC CLASS = LOCAL

SUBREGIONAL TIER

PROJECT LENGTH

LENGTH ROADWAY TIP PROJECT 17BP.1.R.23	=	0.074 MI.
LENGTH STRUCTURES TIP PROJECT 17BP.1.R.23	=	0.024 MI.
TOTAL LENGTH TIP PROJECT 17BP.1.R.23	=	0.098 MI.

WETHERILL ENGINEERING

Prepared for the North Carolina Department of Transportation in the Office of:
559 JONES FRANKLIN ROAD
SUITE 164
Raleigh, N.C. 27606
License No. F-0377
Bus: 919 851 8077
Fax: 919 851 8107

2012 STANDARD SPECIFICATIONS

RIGHT OF WAY DATE:

LETTING DATE:

EDWARD G. WETHERILL, PE
PROJECT ENGINEER

BOB A. MAY, PE
PROJECT DESIGN ENGINEER

HYDRAULICS ENGINEER
NORTH CAROLINA PROFESSIONAL SEAL 034959 ENGINEER DUSTIN D. CREECH
SIGNATURE: 10/22/2012

ROADWAY DESIGN ENGINEER
NORTH CAROLINA PROFESSIONAL SEAL 21116 ENGINEER BOB A. MAY
SIGNATURE: 10/22/12

STATE OF NORTH CAROLINA DEPARTMENT OF TRANSPORTATION

1:43:09 PM
R:\5012\Bertie #17\Roadway\Proj\BR#17_Rdy_tsh.dgn
10/22/2012

PROJECT REFERENCE NO.	SHEET NO.
	1-A

ROADWAY DESIGN ENGINEER

NORTH CAROLINA PROFESSIONAL SEAL 21116 ENGINEER BOB A. MAY

10/22/12

GENERAL NOTES

GENERAL NOTES: 2012 SPECIFICATIONS

EFFECTIVE: 01-17-12
REVISED: 11/01/11

GRADING AND SURFACING OR RESURFACING AND WIDENING:

THE GRADE LINES SHOWN DENOTE THE FINISHED ELEVATION OF THE PROPOSED SURFACING AT GRADE POINTS SHOWN ON THE TYPICAL SECTIONS. WHERE NO GRADE LINES ARE SHOWN, THE PROFILES SHOWN DENOTE THE TOP ELEVATION OF THE EXISTING PAVEMENT ALONG THE CENTER LINE OF SURVEY ON WHICH THE PROPOSED RESURFACING WILL BE PLACED. GRADE LINES MAY BE ADJUSTED BY THE ENGINEER IN ORDER TO SECURE A PROPER TIE-IN.

CLEARING:

CLEARING ON THIS PROJECT SHALL BE PERFORMED TO THE LIMITS ESTABLISHED BY METHOD II - MODIFIED.

SUPERELEVATION:

ALL CURVES ON THIS PROJECT SHALL BE SUPERELEVATED IN ACCORDANCE WITH STD. NO. 225.04 USING THE RATE OF SUPERELEVATION AND RUNOFF SHOWN ON THE PLANS. SUPERELEVATION IS TO BE REVOLVED ABOUT THE GRADE POINTS SHOWN ON THE TYPICAL SECTIONS.

SHOULDER CONSTRUCTION:

ASPHALT, EARTH, AND CONCRETE SHOULDER CONSTRUCTION ON THE HIGH SIDE OF SUPERELEVATED CURVES SHALL BE IN ACCORDANCE WITH STD. NO. 560.01.

UNDERDRAINS:

UNDERDRAINS SHALL BE CONSTRUCTED IN ACCORDANCE WITH STD. NO. 815.03 AT LOCATIONS DIRECTED BY THE ENGINEER.

GUARDRAIL:

THE GUARDRAIL LOCATIONS SHOWN ON THE PLANS MAY BE ADJUSTED DURING CONSTRUCTION AS DIRECTED BY THE ENGINEER. THE CONTRACTOR SHOULD CONSULT WITH THE ENGINEER PRIOR TO ORDERING GUARDRAIL MATERIAL.

TEMPORARY SHORING:

SHORING REQUIRED FOR THE MAINTENANCE OF TRAFFIC WILL BE PAID FOR AS "EXTRA WORK" IN ACCORDANCE WITH SECTION 104-7.

SUBSURFACE PLANS:

NO SUBSURFACE PLANS ARE AVAILABLE ON THIS PROJECT. THE CONTRACTOR SHOULD MAKE HIS OWN INVESTIGATION AS TO THE SUBSURFACE CONDITIONS.

END BENTS:

THE ENGINEER SHALL CHECK THE STRUCTURE END BENT PLANS, DETAILS, AND CROSS-SECTION PRIOR TO SETTING OF THE SLOPE STAKES FOR THE EMBANKMENT OR EXCAVATION APPROACHING A BRIDGE.

UTILITIES:

UTILITY OWNERS ON THIS PROJECT ARE ROANOKE ELECTRIC CORPORATION AND CENTURYLINK

ANY RELOCATION OF EXISTING UTILITIES WILL ACCOMPLISHED BY OTHERS.

RIGHT-OF-WAY MARKERS:

ALL RIGHT-OF-WAY MARKERS ON THIS PROJECT SHALL BE PLACED BY OTHERS.

LIST OF STANDARDS

2012 ROADWAY ENGLISH STANDARD DRAWINGS

The following Roadway Standards as appear in "Roadway Standard Drawings" Highway Design Branch - N. C. Department of Transportation - Raleigh, N. C., Dated January, 2012 are applicable to this project and by reference hereby are considered a part of these plans:

STD.NO.	TITLE
DIVISION 2 - EARTHWORK	
200.02	Method of Clearing - Method II, Modified
225.02	Guide for Grading Subgrade - Secondary and Local
225.04	Method of Obtaining Superelevation - Two Lane Pavement
DIVISION 3 - PIPE CULVERTS	
300.01	Method of Pipe Installation
DIVISION 4 - MAJOR STRUCTURES	
422.11	Reinforced Bridge Approach Fills - Sub Regional Tier
DIVISION 5 - SUBGRADE, BASES AND SHOULDERS	
560.01	Method of Shoulder Construction - High Side of Superelevated Curve - Method I
DIVISION 8 - INCIDENTALS	
815.03	Pipe Underdrain and Blind Drain
840.00	Concrete Base Pad for Drainage Structures
840.29	Frames and Narrow Slot Flat Grates
840.35	Traffic Bearing Grated Drop Inlet - for Cast Iron Double Frame and Grates
840.46	Traffic Bearing Precast Drainage Structure
846.01	Concrete Curb, Gutter and Curb & Gutter
846.04	Drop Inlet Installation in Shoulder Berm Gutter
862.01	Guardrail Placement
862.02	Guardrail Installation
862.03	Structure Anchor Units

INDEX OF SHEETS

SHEET NUMBER	SHEET
1	TITLE SHEET
1-A	INDEX OF SHEETS, GENERAL NOTES, AND LIST OF STANDARD DRAWINGS
1-B	CONVENTIONAL SYMBOLS
2	PAVEMENT SCHEDULE, TYPICAL SECTIONS, AND WEDGING DETAILS
3	SUMMARY OF DRAINAGE QUANTITIES, SUMMARY OF GUARDRAIL, EARTHWORK SUMMARY, ASPHALT PAVEMENT REMOVAL SUMMARY AND SHOULDER BERM GUTTER SUMMARY
4	PLAN & PROFILE SHEET
TCP-1	TRAFFIC CONTROL PLANS
EC-1 THRU EC-6	EROSION CONTROL PLANS
UO-1	UTILITIES BY OTHERS PLANS
X-1A	CROSS-SECTION SUMMARY SHEET
X-1 THRU X-3	CROSS-SECTIONS
S-1 THRU S-20	STRUCTURE PLANS (BRIDGE #17)

8/17/99

1:43:38 PM
P:\2012\Bertie #17\Roadway\Proj\BR#17_Rdy_tsh.dgn
10/22/2012

04/16/11

PROJECT REFERENCE NO.	SHEET NO.
17BP.J.R.23	1-B

Note: Not to Scale

S.U.E. = Subsurface Utility Engineering

STATE OF NORTH CAROLINA
DIVISION OF HIGHWAYS

CONVENTIONAL PLAN SHEET SYMBOLS

BOUNDARIES AND PROPERTY:

- State Line
- County Line
- Township Line
- City Line
- Reservation Line
- Property Line
- Existing Iron Pin — EIP
- Property Corner
- Property Monument — ECM
- Parcel/Sequence Number — 123
- Existing Fence Line
- Proposed Woven Wire Fence
- Proposed Chain Link Fence
- Proposed Barbed Wire Fence
- Existing Wetland Boundary — WLB
- Proposed Wetland Boundary — WLB
- Existing Endangered Animal Boundary — EAB
- Existing Endangered Plant Boundary — EPB
- Known Soil Contamination: Area or Site
- Potential Soil Contamination: Area or Site

BUILDINGS AND OTHER CULTURE:

- Gas Pump Vent or U/G Tank Cap
- Sign — S
- Well — W
- Small Mine
- Foundation
- Area Outline
- Cemetery
- Building
- School
- Church
- Dam

HYDROLOGY:

- Stream or Body of Water
- Hydro, Pool or Reservoir
- Jurisdictional Stream — JS
- Buffer Zone 1 — BZ 1
- Buffer Zone 2 — BZ 2
- Flow Arrow
- Disappearing Stream
- Spring
- Wetland
- Proposed Lateral, Tail, Head Ditch — FLOW
- False Sump

RAILROADS:

- Standard Gauge — CSX TRANSPORTATION
- RR Signal Milepost — MILEPOST 35
- Switch — SWITCH
- RR Abandoned
- RR Dismantled

RIGHT OF WAY:

- Baseline Control Point
- Existing Right of Way Marker
- Existing Right of Way Line
- Proposed Right of Way Line — RW
- Proposed Right of Way Line with Iron Pin and Cap Marker — RW
- Proposed Right of Way Line with Concrete or Granite R/W Marker — RW
- Proposed Control of Access Line with Concrete C/A Marker — CA
- Existing Control of Access — CA
- Proposed Control of Access — CA
- Existing Easement Line — E
- Proposed Temporary Construction Easement — E
- Proposed Temporary Drainage Easement — TDE
- Proposed Permanent Drainage Easement — PDE
- Proposed Permanent Drainage / Utility Easement — DUE
- Proposed Permanent Utility Easement — PUE
- Proposed Temporary Utility Easement — TUE
- Proposed Aerial Utility Easement — AUE
- Proposed Permanent Easement with Iron Pin and Cap Marker

ROADS AND RELATED FEATURES:

- Existing Edge of Pavement
- Existing Curb
- Proposed Slope Stakes Cut — C
- Proposed Slope Stakes Fill — F
- Proposed Curb Ramp — CR
- Existing Metal Guardrail
- Proposed Guardrail
- Existing Cable Guiderail
- Proposed Cable Guiderail
- Equality Symbol
- Pavement Removal

VEGETATION:

- Single Tree
- Single Shrub
- Hedge
- Woods Line
- Orchard
- Vineyard — Vineyard

EXISTING STRUCTURES:

MAJOR:

- Bridge, Tunnel or Box Culvert — CONC
- Bridge Wing Wall, Head Wall and End Wall — CONC WW

MINOR:

- Head and End Wall — CONC HW
- Pipe Culvert
- Footbridge
- Drainage Box: Catch Basin, DI or JB — CB
- Paved Ditch Gutter
- Storm Sewer Manhole — S
- Storm Sewer — S

UTILITIES:

POWER:

- Existing Power Pole
- Proposed Power Pole
- Existing Joint Use Pole
- Proposed Joint Use Pole
- Power Manhole — P
- Power Line Tower
- Power Transformer
- U/G Power Cable Hand Hole
- H-Frame Pole
- Recorded U/G Power Line — P
- Designated U/G Power Line (S.U.E.*) — P

TELEPHONE:

- Existing Telephone Pole
- Proposed Telephone Pole
- Telephone Manhole — T
- Telephone Booth
- Telephone Pedestal — T
- Telephone Cell Tower
- U/G Telephone Cable Hand Hole — HH
- Recorded U/G Telephone Cable — T
- Designated U/G Telephone Cable (S.U.E.*) — T
- Recorded U/G Telephone Conduit — TC
- Designated U/G Telephone Conduit (S.U.E.*) — TC
- Recorded U/G Fiber Optics Cable — T FO
- Designated U/G Fiber Optics Cable (S.U.E.*) — T FO

WATER:

- Water Manhole — W
- Water Meter
- Water Valve
- Water Hydrant
- Recorded U/G Water Line — W
- Designated U/G Water Line (S.U.E.*) — W
- Above Ground Water Line — A/G Water

TV:

- TV Satellite Dish
- TV Pedestal — C
- TV Tower
- U/G TV Cable Hand Hole — HH
- Recorded U/G TV Cable — TV
- Designated U/G TV Cable (S.U.E.*) — TV
- Recorded U/G Fiber Optic Cable — TV FO
- Designated U/G Fiber Optic Cable (S.U.E.*) — TV FO

GAS:

- Gas Valve
- Gas Meter
- Recorded U/G Gas Line — G
- Designated U/G Gas Line (S.U.E.*) — G
- Above Ground Gas Line — A/G Gas

SANITARY SEWER:

- Sanitary Sewer Manhole
- Sanitary Sewer Cleanout
- U/G Sanitary Sewer Line — SS
- Above Ground Sanitary Sewer — A/G Sanitary Sewer
- Recorded SS Forced Main Line — FSS
- Designated SS Forced Main Line (S.U.E.*) — FSS

MISCELLANEOUS:

- Utility Pole
- Utility Pole with Base
- Utility Located Object
- Utility Traffic Signal Box — S
- Utility Unknown U/G Line — ?UTL
- U/G Tank; Water, Gas, Oil
- Underground Storage Tank, Approx. Loc. — UST
- A/G Tank; Water, Gas, Oil
- Geoenvironmental Boring
- U/G Test Hole (S.U.E.*)
- Abandoned According to Utility Records — AATUR
- End of Information — E.O.I.

PROJECT REFERENCE NO.	SHEET NO.
17BP.JR.23	2
ROADWAY DESIGN ENGINEER	PAVEMENT DESIGN ENGINEER

NORTH CAROLINA PROFESSIONAL SEAL 21114 ENGINEER BOB A. MAY 10/22/12

WETHERILL ENGINEERING
559 Jones Franklin Rd. Suite 164
Raleigh, N.C. 27606
Liscense No. F-0377
Bus: 919 851 8077
Fax: 919 851 8107
TRANSPORTATION PLANNING/DESIGN - BRIDGE/STRUCTURE DESIGN
CIVIL/SITE DESIGN - GIS/GPS - CONSTRUCTION OBSERVATION

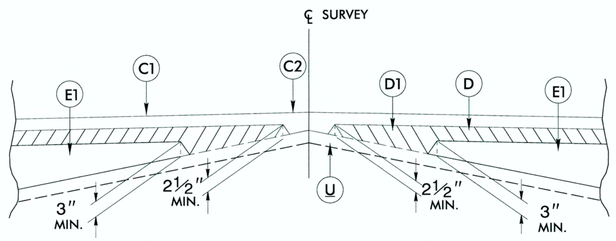

Detail Showing Method of Wedging

NOTE: MILL EXISTING PAVEMENT AT THE FOLLOWING LOCATIONS

-L- STA. 10+35.00 TO -L- STA. 11+08.54
-L- STA. 15+11.62TO -L- STA. 15+50.55

PAVEMENT SCHEDULE

(FINAL PAVEMENT DESIGN)

C	PROP. APPROX. 1½" ASPHALT CONCRETE SURFACE COURSE, TYPE SF9.5A, AT AN AVERAGE RATE OF 165 LBS. PER SQ. YD.
C1	PROP. APPROX. 3" ASPHALT CONCRETE SURFACE COURSE, TYPE SF9.5A, AT AN AVERAGE RATE OF 165 LBS. PER SQ. YD. IN EACH OF TWO LAYERS.
C2	PROP. VAR. DEPTH ASPHALT CONCRETE SURFACE COURSE, TYPE SF9.5A, AT AN AVERAGE RATE OF 110 LBS. PER SQ. YD. PER 1" DEPTH. TO BE PLACED IN LAYERS NOT TO EXCEED 1½" IN DEPTH.
D	PROP. APPROX. 2½" ASPHALT CONCRETE INTERMEDIATE COURSE, TYPE I19.0B, AT AN AVERAGE RATE OF 285 LBS. PER SQ. YD.
D1	PROP. VAR. DEPTH ASPHALT CONCRETE INTERMEDIATE COURSE, TYPE I19.0B, AT AN AVERAGE RATE OF 114 LBS. PER SQ. YD. PER 1" DEPTH, TO BE PLACED IN LAYERS NOT LESS THAN 2½" IN DEPTH OR GREATER THAN 4" IN DEPTH.
E	PROP. APPROX. 4" ASPHALT CONCRETE BASE COURSE, TYPE B25.0B, AT AN AVERAGE RATE OF 456 LBS. PER SQ. YD.
E1	PROP. VAR. DEPTH ASPHALT CONCRETE BASE COURSE, TYPE B25.0B, AT AN AVERAGE RATE OF 114 LBS. PER SQ. YD. PER 1" DEPTH. TO BE PLACED IN LAYERS NOT LESS THAN 3" IN DEPTH OR GREATER THAN 5½" IN DEPTH.
T	EARTH MATERIAL.
U	EXISTING PAVEMENT.
V	MILLING ASPHALT PAVEMENT, 3" TO 0"

NOTE: PAVEMENT EDGE SLOPES ARE 1:1 UNLESS SHOWN OTHERWISE.

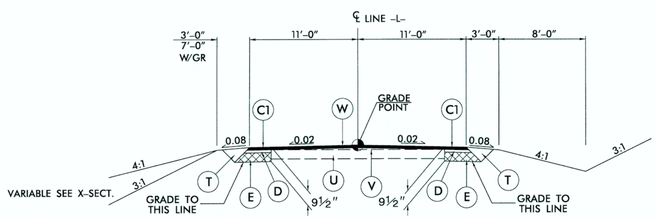

TYPICAL SECTION NO. 1

USE TYPICAL SECTION NO. 1 AS FOLLOWS:

-L- STA. 10+35.00 TO -L- STA. 11+70.00
-L- STA. 13+25.00 TO -L- STA. 15+50.55

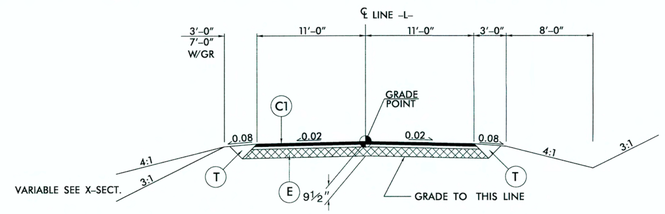

TYPICAL SECTION NO. 2

USE TYPICAL SECTION NO. 2 AS FOLLOWS:

-L- STA. 11+70.00 TO -L- STA. 11+83.75 (BEGIN BRIDGE)
-L- STA. 13+11.25 (END BRIDGE) TO -L- STA. 13+25.00

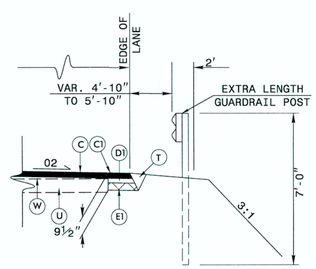

PARTIAL TYPICAL SECTION NO. 1

USE PARTIAL TYPICAL SECTION NO. 1 IN CONJUNCTION WITH TYPICAL SECTION NOS. 1 & 2 AS FOLLOWS:

-L- STA. 11+10.00 TO -L- STA. 11+85.00 RT.
-L- STA. 11+10.00 TO -L- STA. 11+85.00 LT.

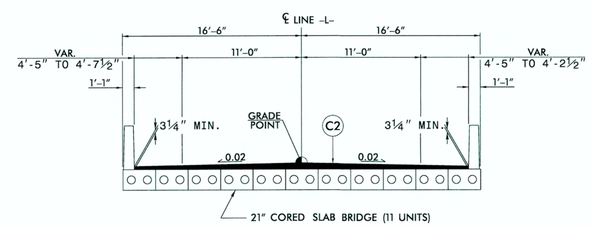

TYPICAL SECTION NO. 3

USE TYPICAL SECTION NO. 3 AS FOLLOWS:

-L- STA. 11+83.75 (BEGIN BRIDGE) TO -L- STA. 13+11.25 (END BRIDGE)

6/2/99
1:14:35 PM
B:\531_17\Roadway\Proj\BR#17_Rdy_typ.dgn
Bertie #17\Roadway\Proj\BR#17_Rdy_typ.dgn
10/22/2012

COMPUTED BY: bam	DATE: 8/1/2012
CHECKED BY:	DATE:

STATE OF NORTH CAROLINA
DIVISION OF HIGHWAYS

PROJECT REFERENCE NO.	SHEET NO.
17BP.1.R.23	3

SUMMARY OF EARTHWORK

STATION	STATION	UNCL. EXCAV.	EMBANK. +%	BORROW	WASTE
-L- 10+35.00	-L- 11+83.75	7	229	222	
SUBTOTALS:		7	229	222	
-L- 13+11.25	-L- 14+60.00	5	90	85	
SUBTOTALS:		5	90	85	
PROJECT SUBTOTALS:		12	319	307	
LOSS DUE TO CLEARING & GRUBBING					
PROJECT TOTALS:		12	319	307	
5% TO REPLACE TOPSOIL ON BORROW PIT				15	
GRAND TOTALS:		12	319	322	
SAY:		50		350	

Note: Approximate quantities only. Unclassified Excavation, Borrow Excavation, Shoulder Borrow, Fine Grading, Clearing and Grubbing, Breaking of Existing Pavement, and Removal of Existing Pavement will be paid for at the contract lump sum price for "Grading."

PAVEMENT REMOVAL SUMMARY

SURVEY LINE	STATION	STATION	LOCATION LT/RT/CL	YD²
-L-	11+70.00	12+00.89	CL	77.18
-L-	12+86.72	13+25.00	CL	93.57
			TOTAL:	170.75
			SAY:	180.00

SHOULDER BERM GUTTER SUMMARY

SURVEY LINE	STATION	STATION	LENGTH
-L- RT.	11+60.00	11+74.00	14.00
-L- LT.	11+60.00	11+74.00	14.00
-L- RT.	13+21.00	13+35.00	14.00
-L- LT.	13+21.00	13+35.00	14.00
		TOTAL:	56.00
		SAY:	60.00

RIGHT OF WAY AREA DATA

PARCEL NO.	PROPERTY OWNERS NAMES	TOTAL ACREAGE	AREA TAKEN	AREA REMAINING RT.	AREA REMAINING LT.	CONST. EASE.	PERM. DRAIN. EASE.	TEMP. DRAIN. EASE.
1	FREDERICK ALLEN & ANN D. TAYLOE		4074.12 SF					
2	ELE, INC.		4021.47 SF					
3	BEASLEY FARMS, INC.		0.142 AC.					
4	JAMES ALAN WILLIAMS, TR.		0.146 AC.					

NOTE: INVERT ELEVATIONS INDICATED ARE FOR BID PURPOSES ONLY AND SHALL NOT BE USED FOR PROJECT CONSTRUCTION STAKEOUT. SEE "STANDARD SPECIFICATIONS FOR ROADS AND STRUCTURES, SECTION 300-5".

SUB-REGIONAL & REGIONAL
LIST OF PIPES, ENDWALLS, ETC. (FOR PIPES 48" & UNDER)

STATION	LOCATION (LT,RT, OR CL)	STRUCTURE NO. FROM	STRUCTURE NO. TO	TOP ELEVATION	INVERT ELEVATION	INVERT ELEVATION	SLOPE CRITICAL	DRAINAGE PIPE (RCP, CSP, CAAP, HDPE, or PVC) 12"	15"	18"	24"	30"	36"	42"	48"	DO NOT USE RCP	DO NOT USE CSP	DO NOT USE CAAP	DO NOT USE HDPE
-L- 11+63.00	RT.	0401		36.29															
-L- 11+63.00	LT.	0402		36.29															
		0401	0402		33.54	31.29													
		0402	0403		31.29	31.00			20'										
-L- 13+32.00	RT.	0404		36.37															
-L- 13+32.00	LT.	0405		36.37															
		0404	0405		33.62	31.37													
		0405	0406		31.37	30.55			16'										
PROJECT TOTAL									36'										

STATION	STRUCTURE NO. FROM	STRUCTURE NO. TO	C.S. PIPE 12" (.064)	15" (.064)	18" (.064)	24" (.064)	36" (.079)	42" (.109)	48" (.109)	R.C. PIPE (CLASS III) 15"	18"	24"	30"	36"	42"	48"	R.C. PIPE (CLASS IV) 12"	15"	18"	24"	30"	36"	42"	48"
-L- 11+63.00	0401																							
-L- 11+63.00	0402																							
	0401	0402																28'						
	0402	0403																						
-L- 13+32.00	0404																							
-L- 13+32.00	0405																							
	0404	0405																28'						
	0405	0406																						
PROJECT TOTAL																		56'						

STATION	STRUCTURE NO. FROM	STRUCTURE NO. TO	**" R. C. PIPE (CLASS V)	**" R. C. PIPE CULVERTS, CONTRACTOR DESIGN PIPE	**" R. C. PIPE CULVERTS, CONTRACTOR DESIGN PIPE	15" SIDE DRAIN PIPE	18" SIDE DRAIN PIPE	ENDWALLS STD. 838.01, STD. 838.11 OR STD. 838.80 (UNLESS NOTED OTHERWISE) CU. YDS. R.C.P.	C.S.P.	QUANTITIES FOR DRAINAGE STRUCTURES PER EACH (0' THRU 5.0')	* TOTAL L.F. FOR PAY QUANTITY SHALL BE COL. 'A' + (1.3 X COL.'B') LIN. *FT. A 5.0' THRU 10.0'	B 10.0' AND ABOVE	C.B. STD. 840.01 OR STD. 840.02	FRAME, GRATES AND HOOD STANDARD 840.03 TYPE OF GRATE E	F	G	CONCRETE TRANSITIONAL SECTION CATCH BASIN	DROP INLET	G.D.I. TYPE "B" STD. 840.18 OR 840.27	G.D.I. (N.S.) FRAME WITH TWO GRATES STD. 840.24	T.B.D.I. STD. 840.35	G.D.I. (N.S.) FRAME WITH TWO GRATES STD. 840.29	M.H. FRAME & COVER STD. 840.54	T.B.J.B. STD. 840.34	CORR. STEEL ELBOWS NO. & SIZE	CONC. COLLARS CL. "B" C.Y. STD 840.72	CONC. & BRICK PIPE PLUG, C.Y. STD. 840.71	PIPE REMOVAL LIN.FT.	REMARKS
-L- 11+63.00	0401									1											1	1							
-L- 11+63.00	0402									1											1	1							
	0401	0402																											
	0402	0403																											
-L- 13+32.00	0404									1											1	1							
-L- 13+32.00	0405									1											1	1							
	0404	0405																											
	0405	0406																											
PROJECT TOTAL										4											4	4							

ABBREVIATIONS

C.B. CATCH BASIN
N.D.I. NARROW DROP INLET
D.I. DROP INLET
G.D.I. GRATED DROP INLET
G.D.I. (N.S.) GRATED DROP INLET (NARROW SLOT)
J.B. JUNCTION BOX
M.H. MANHOLE
T.B.D.I. TRAFFIC BEARING DROP INLET
T.B.J.B. TRAFFIC BEARING JUNCTION BOX

"N" = DISTANCE FROM EDGE OF LANE TO FACE OF GUARDRAIL.
TOTAL SHOULDER WIDTH = DISTANCE FROM EDGE OF TRAVEL LANE TO SHOULDER BREAK POINT.
FLARE LENGTH = DISTANCE FROM LAST SECTION OF PARALLEL GUARDRAIL TO END OF GUARDRAIL.
W = TOTAL WIDTH OF FLARE FROM BEGINNING OF TAPER TO END OF GUARDRAIL.
G = GATING IMPACT ATTENUATOR TYPE 350
NG = NON-GATING IMPACT ATTENUATOR TYPE 350

GUARDRAIL SUMMARY

SURVEY LINE	BEG. STA.	END STA.	LOCATION	LENGTH STRAIGHT	SHOP CURVED	DOUBLE FACED	WARRANT POINT APPROACH END	TRAILING END	"N" DIST. FROM E.O.L.	TOTAL SHOUL. WIDTH	FLARE LENGTH APPROACH END	TRAILING END	W APPROACH END	TRAILING END	ANCHORS XI MOD	TYPE III	GRAU 350	M-350	B-77	CAT-1	VI MOD	BIC	AT-1	IMPACT ATTENUATOR TYPE 350 EA	G	NG	SINGLE FACED GUARDRAIL	REMOVE EXISTING GUARDRAIL	REMOVE AND STOCKPILE EXISTING GUARDRAIL	REMARKS
-L-	11+08.75	11+83.75	LT.	75.00'				11+83.75	4'-5"	7'-5"		50'-0"		1'-0"		1	1													
-L-	11+08.75	11+83.75	RT.	75.00'			11+83.75		4'-5"	7'-5"	50'-0"		1'-0"			1	1													
-L-	13+11.25	13+86.25	LT.	75.00'			13+11.25		4'-5"	7'-5"						1	1													
-L-	13+11.25	13+86.25	RT.	75.00'				13+11.25	4'-5"	7'-5"						1	1													
		PROJECT SUBTOTAL		300.00'												4	4													
		LESS ANCHOR DEDUCTIONS		(-)275.00'												GUARDRAIL ANCHOR DEDUCTIONS														
		PROJECT TOTAL		25.00'												TYPE III = 4 @ 18.75' = 75'														
																GRAU 350 = 4 @ 50' = 200'														
		SAY		50.00'		ADDITIONAL GUARDRAIL POSTS = 5 EACH										TOTAL DEDUCTIONS = 275'														

12/06/07
1:45:06 PM
P:\2012\Bertie #17\Roadway\Proj\BR#17_Rdy_sum.dgn
10/22/2012

PROJECT REFERENCE NO.	SHEET NO.
17BP.1.R.23	4
R/W SHEET NO.	
ROADWAY DESIGN ENGINEER	HYDRAULICS ENGINEER

NORTH CAROLINA PROFESSIONAL SEAL 21114 ENGINEER BOB A. MAY — 10/22/12

NORTH CAROLINA PROFESSIONAL SEAL 034959 ENGINEER JOHN D. CREECH — 10/22/2012

WETHERILL ENGINEERING
559 Jones Franklin Rd. Suite 164
Raleigh, N.C. 27606
Liscense No. F-0377
Bus: 919 851 8077
Fax: 919 851 8107

TRANSPORTATION PLANNING/DESIGN - BRIDGE/STRUCTURE DESIGN
CIVIL/SITE DESIGN - GIS/GPS - CONSTRUCTION OBSERVATION

REVISIONS

8/17/99

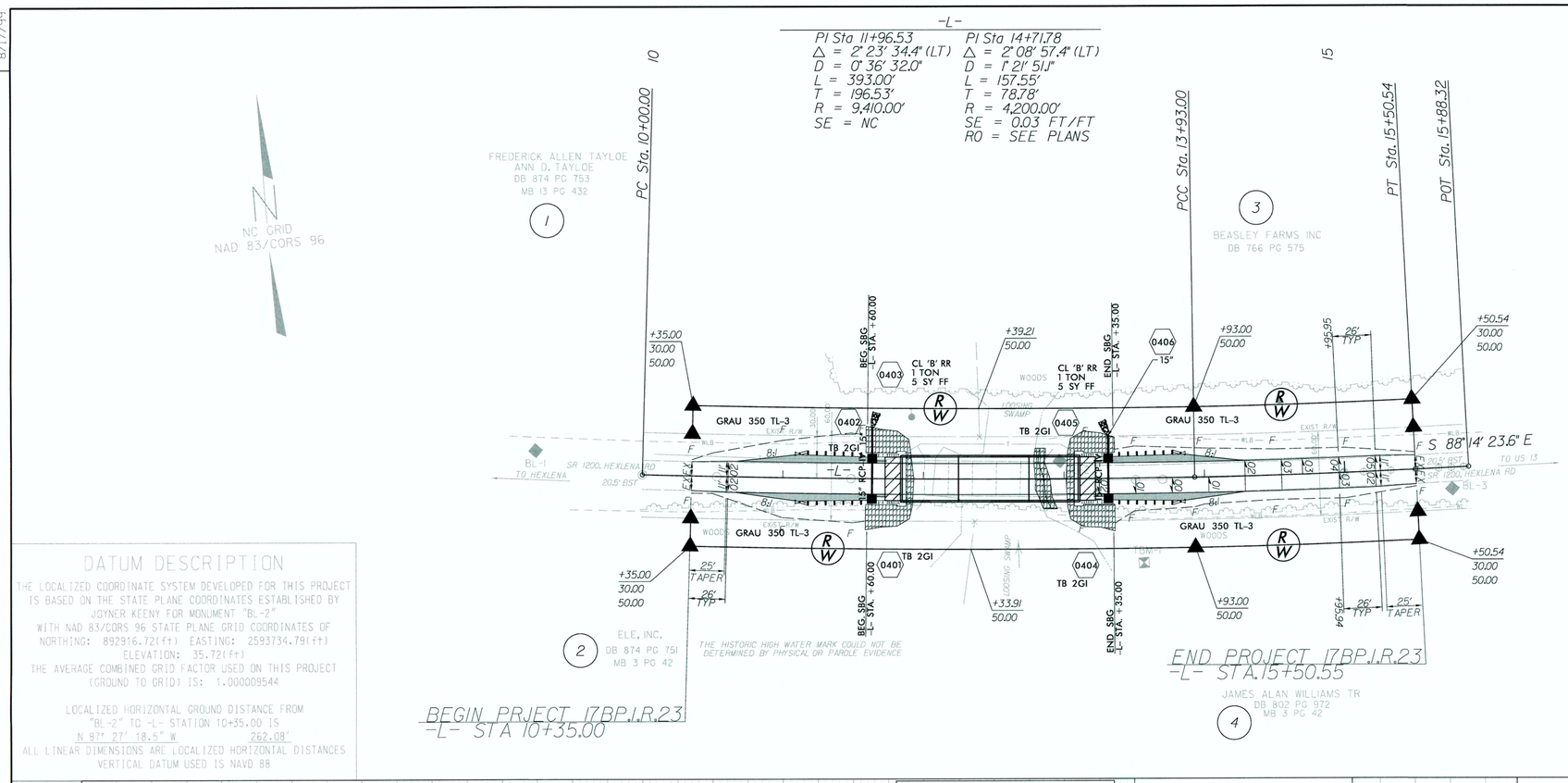

DATUM DESCRIPTION

THE LOCALIZED COORDINATE SYSTEM DEVELOPED FOR THIS PROJECT IS BASED ON THE STATE PLANE COORDINATES ESTABLISHED BY JOYNER KEENY FOR MONUMENT "BL-2"
WITH NAD 83/CORS 96 STATE PLANE GRID COORDINATES OF
NORTHING: 892916.72(ft) EASTING: 2593734.79(ft)
ELEVATION: 35.72(ft)
THE AVERAGE COMBINED GRID FACTOR USED ON THIS PROJECT (GROUND TO GRID) IS: 1.000009544

LOCALIZED HORIZONTAL GROUND DISTANCE FROM "BL-2" TO -L- STATION 10+35.00 IS
N 87° 27' 18.5" W 262.08'
ALL LINEAR DIMENSIONS ARE LOCALIZED HORIZONTAL DISTANCES
VERTICAL DATUM USED IS NAVD 88

SKETCH SHOWING BRIDGE/PAVEMENT RELATIONSHIP

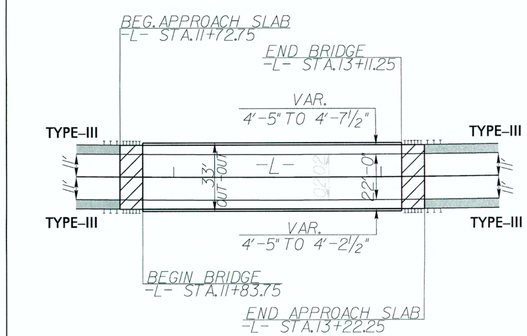

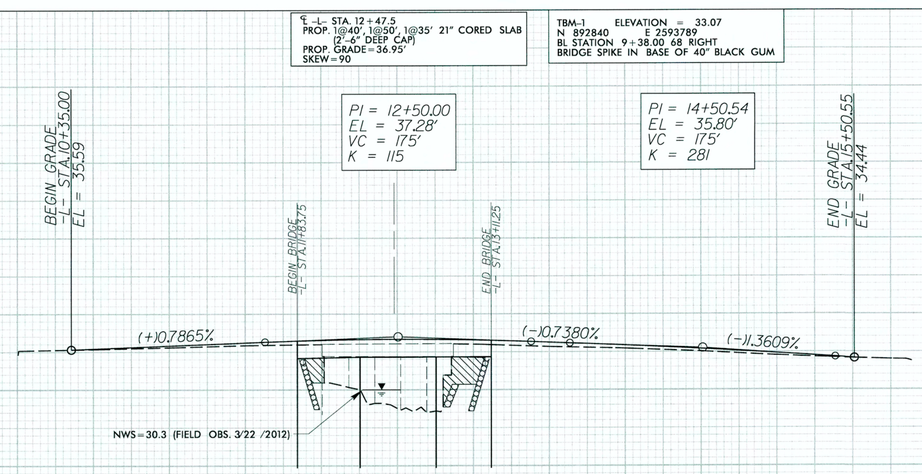

DETAIL A
ABUTMENT EXCAVATION & BANK STABILIZATION
(NOT TO SCALE)

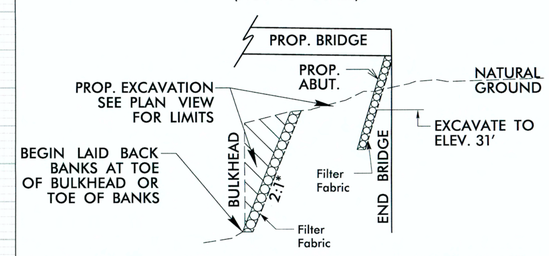

*NOTE: MAINTAIN 2:1 LAID BACK BANKS TO 5Ft. BEYOND OUT-TO-OUT PROP. BRIDGE FACE.

QUANTITIES REFLECT BANK STABILIZATION ONLY
Type of Liner=24.9 TONS,
CL. II Rip-Rap
Filter Fabric=26.5 SQ. YDS.

-L- STA. 12+85

BRIDGE HYDRAULIC DATA

DESIGN DISCHARGE	= 1,700	CFS
DESIGN FREQUENCY	= 25	YRS
DESIGN HW ELEVATION	= 34.4	FT
BASE DISCHARGE	= 2,663	CFS
BASE FREQUENCY	= 100	YRS
BASE HW ELEVATION	= 35.16	FT
OVERTOPPING DISCHARGE	= 2,100	CFS
OVERTOPPING FREQUENCY	= 50+/-	YRS
OVERTOPPING ELEVATION	= 34.5	FT
DATE OF SURVEY	= 3/22/2012	
W.S. ELEVATION AT DATE OF SURVEY	= 30.3	FT

10 11 12 13 14 15

3:45:57 PM
10/22/2012
Ver-tie #17\Roadway\Proj\BR#17_Rdy.pshdgn

PROJ. REFERENCE NO.	SHEET NO.
17BP.1.R.23	TCP-1

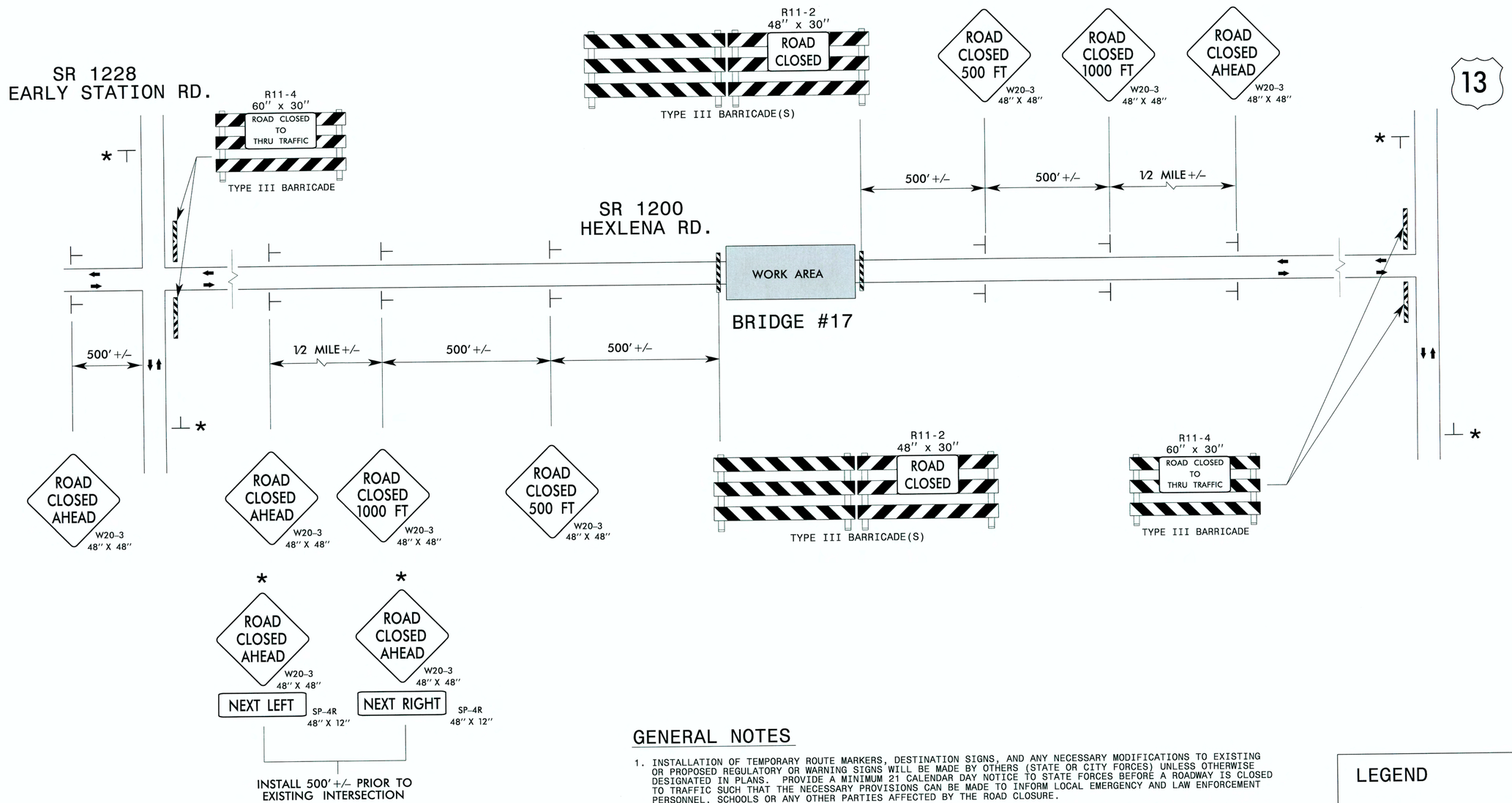

ROADWAY STANDARD DRAWINGS

THE FOLLOWING ROADWAY STANDARDS AS SHOWN IN "ROADWAY STANDARD DRAWINGS" - PROJECT SERVICES UNIT - N.C. DEPARTMENT OF TRANSPORTATION - RALEIGH, N.C., DATED JANUARY 2012 ARE APPLICABLE TO THIS PROJECT AND BY REFERENCE HEREBY ARE CONSIDERED A PART OF THESE PLANS:

STD. NO.	TITLE
1101.03	TEMPORARY ROAD CLOSURES
1101.04	TEMPORARY SHOULDER CLOSURES
1110.01	STATIONARY WORK ZONE SIGNS
1110.02	PORTABLE WORK ZONE SIGNS
1135.01	CONES
1145.01	BARRICADES
904.10	ORIENTATION OF GROUND MOUNTED SIGNS

GENERAL NOTES

1. INSTALLATION OF TEMPORARY ROUTE MARKERS, DESTINATION SIGNS, AND ANY NECESSARY MODIFICATIONS TO EXISTING OR PROPOSED REGULATORY OR WARNING SIGNS WILL BE MADE BY OTHERS (STATE OR CITY FORCES) UNLESS OTHERWISE DESIGNATED IN PLANS. PROVIDE A MINIMUM 21 CALENDAR DAY NOTICE TO STATE FORCES BEFORE A ROADWAY IS CLOSED TO TRAFFIC SUCH THAT THE NECESSARY PROVISIONS CAN BE MADE TO INFORM LOCAL EMERGENCY AND LAW ENFORCEMENT PERSONNEL, SCHOOLS OR ANY OTHER PARTIES AFFECTED BY THE ROAD CLOSURE.
2. INSTALL SIGNS BEFORE THE BARRICADES WHEN CLOSING THE ROADWAY TO TRAFFIC. REMOVE BARRICADES BEFORE SIGNS WHEN OPENING THE ROADWAY TO TRAFFIC. INSTALL/REMOVE SIGNS AND BARRICADES WITHIN THE SAME CALENDAR DAY.
3. POSITION WING BARRICADES ON THE SHOULDERS AND SLOPE THE STRIPES DOWNWARD IN THE DIRECTION TOWARD WHICH TRAFFIC MUST TURN IN DETOURING.
4. USE ADDITIONAL TYPE III BARRICADES IN STAGGERED LOCATIONS SUPPLEMENTED WITH SIGN R11-4 "ROAD CLOSED TO THRU TRAFFIC" IN THE EVENT THAT TRAFFIC MUST BE MAINTAINED BEYOND THE DETOUR POINT.
5. SEE STANDARD SPECIFICATION 1089-1 FOR WORK ZONE SIGNS.
6. SEE STANDARD SPECIFICATION 1089-2 FOR WORK ZONE SIGN SUPPORTS.

LEGEND

- DIRECTION OF TRAFFIC FLOW
- BARRICADE (TYPE III)
- STATIONARY MOUNTED SIGN

WETHERILL ENGINEERING
559 Jones Franklin Rd. Suite 164
Raleigh, N.C. 27606
Liscense No. F-0377
Bus: 919 851 8077
Fax: 919 851 8107
TRANSPORTATION PLANNING/DESIGN - BRIDGE/STRUCTURE DESIGN
CIVIL/SITE DESIGN - GIS/GPS - CONSTRUCTION OBSERVATION

APPROVED: Bob A. May DATE: 11/12/12

SEAL

NORTH CAROLINA PROFESSIONAL SEAL 21116 ENGINEER BOB A. MAY

DIVISION OF HIGHWAYS STATE OF NORTH CAROLINA DEPARTMENT OF TRANSPORTATION WORK ZONE TRAFFIC CONTROL

ROAD CLOSURE
SR 1200 (HEXLENA RD.)

10/22/2012
11:48:51 PM
P:\2012\Bertie #17\Traffic\TrafficControl\TCP\BR#17_TCP_BTCP.dgn

NOTES: ANY DEVIATION FROM OPTIONS GIVEN WILL REQUIRE PRIOR APPROVAL BY ENGINEER.

ADDITIONAL EROSION CONTROL DEVICES MAY NEED TO BE INSTALLED AS DIRECTED BY THE ENGINEER.

ROADSIDE ENVIRONMENTAL UNIT
DEPARTMENT OF TRANSPORTATION
DIVISION OF HIGHWAYS
RALEIGH, N.C.

2012 STANDARD SPECIFICATIONS

EROSION CONTROL PLAN

PROJECT REFERENCE NO.	SHEET #
17BP.1.R.23	EC-01/C0
R/W SHEET NO.	
ROADWAY DESIGN ENGINEER	HYDRAULICS ENGINEER

Std. #	Description	Symbol
1605.01	Temporary Silt Fence	
1632.03	Rock Inlet Sediment Trap Type C	
	Coir Fiber Wattle Break	-CFW-
	Turbidity Curtain	
	Coir Fiber Wattle Barrier	

DUSTIN CREECH
LEVEL III NAME

3019
LEVEL III CERTIFICATION NO.

WETHERILL ENGINEERING
559 Jones Franklin Ro
Raleigh, N
License N
Bus: 919
Fax: 919
TRANSPORTATION PLANNING/DESIGN - BRIDGE/STRUCTURE
CIVIL/SITE DESIGN - GIS/GPS - CONSTRUCTION OBSERV

NORTH CAROL PROFESSIONAL SEAL 034959 DUSTIN D. CRE 10-22-2012

GRAPHIC SCALE 100' 0' 100' 200'

NC GRID
NAD 83/CORS 96

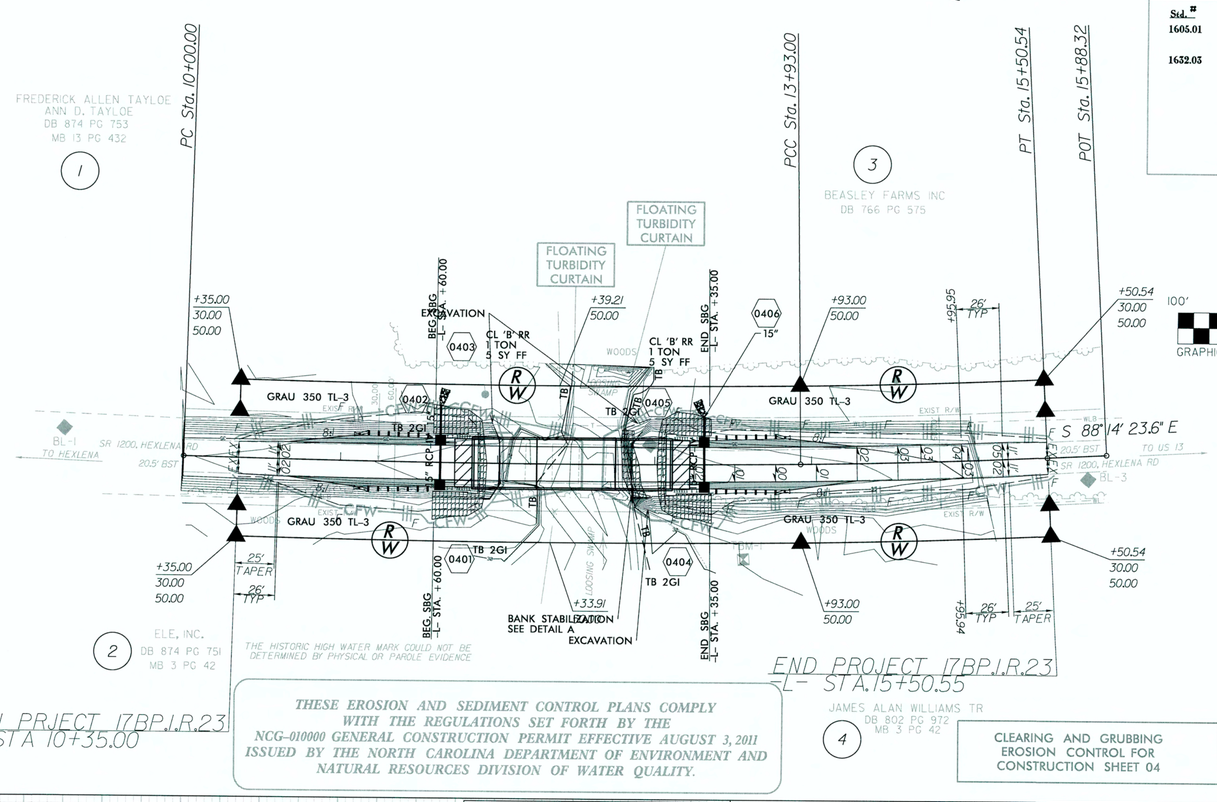

2012 STANDARD DRAWINGS

1604.01	Railroad Erosion Control Detail	1632.01	Rock Inlet Sediment Trap Type A
1605.01	Temporary Silt Fence	1632.02	Rock Inlet Sediment Trap Type B
1606.01	Special Sediment Control Fence	1632.03	Rock Inlet Sediment Trap Type C
1607.01	Gravel Construction Entrance	1633.01	Temporary Rock Silt Check Type A
1622.01	Temporary Berms and Slope Drains	1633.02	Temporary Rock Silt Check Type B
1630.01	Riser Basin	1634.01	Temporary Rock Sediment Dam Type A
1630.02	Silt Basin Type B	1634.02	Temporary Rock Sediment Dam Type B
1630.03	Temporary Silt Ditch	1635.01	Rock Pipe Inlet Sediment Trap Type A
1630.04	Stilling Basin	1635.02	Rock Pipe Inlet Sediment Trap Type B
1630.05	Temporary Diversion	1640.01	Coir Fiber Baffle
1630.06	Special Stilling Basin	1645.01	Temporary Stream Crossing
1631.01	Matting Installation		

DATUM DESCRIPTION

THE LOCALIZED COORDINATE SYSTEM DEVELOPED FOR THIS PROJECT IS BASED ON THE STATE PLANE COORDINATES ESTABLISHED BY JOYNER KEENY FOR MONUMENT "BL-2"
WITH NAD 83/CORS 96 STATE PLANE GRID COORDINATES OF
NORTHING: 892916.72(ft) EASTING: 2593734.79(ft)
ELEVATION: 35.72(ft)
THE AVERAGE COMBINED GRID FACTOR USED ON THIS PROJECT (GROUND TO GRID) IS: 1.000009544

LOCALIZED HORIZONTAL GROUND DISTANCE FROM "BL-2" TO -L- STATION 10+35.00 IS
N 87° 27' 18.5" W 262.08'
ALL LINEAR DIMENSIONS ARE LOCALIZED HORIZONTAL DISTANCES
VERTICAL DATUM USED IS NAVD 88

THESE EROSION AND SEDIMENT CONTROL PLANS COMPLY WITH THE REGULATIONS SET FORTH BY THE NCG-010000 GENERAL CONSTRUCTION PERMIT EFFECTIVE AUGUST 3, 2011 ISSUED BY THE NORTH CAROLINA DEPARTMENT OF ENVIRONMENT AND NATURAL RESOURCES DIVISION OF WATER QUALITY.

CLEARING AND GRUBBING EROSION CONTROL FOR CONSTRUCTION SHEET 04

DETAIL A
ABUTMENT EXCAVATION & BANK STABILIZATIO
(NOT TO SCALE)

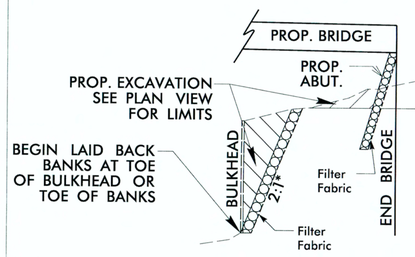

*NOTE: MAINTAIN 2:1 LAID BACK BANKS TO 5Ft. BEYOND OUT-TO-OUT PROP. BRIDGE FACE.

QUANTITIES REFLECT
BANK STABILIZATION OF
Type of Liner = 24.9 TONS
CL. II Rip-Rap
Filter Fabric = 26.5 SQ. YD

-L- STA. 12 + 85

℄ -L- STA. 12 + 47.5
PROP. 1@40', 1@50', 1@35' 21" CORED SLAB (2'-6" DEEP CAP)
PROP. GRADE = 36.95'
SKEW = 90

TBM-1 ELEVATION = 33.07
N 892840 E 2593789
BL STATION 9 + 38.00 68 RIGHT
BRIDGE SPIKE IN BASE OF 40" BLACK GUM

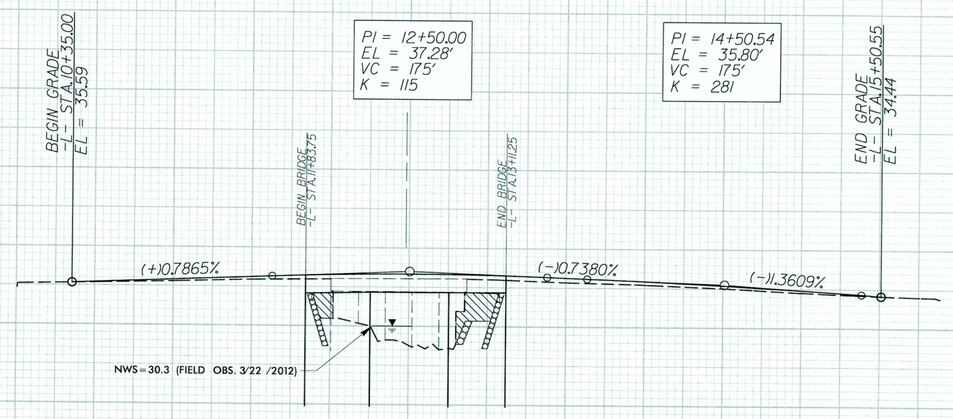

BRIDGE HYDRAULIC DATA

DESIGN DISCHARGE	= 1,700	CFS
DESIGN FREQUENCY	= 25	YRS
DESIGN HW ELEVATION	= 34.4	FT
BASE DISCHARGE	= 2,663	CFS
BASE FREQUENCY	= 100	YRS
BASE HW ELEVATION	= 35.16	FT
OVERTOPPING DISCHARGE	= 2,100	CFS
OVERTOPPING FREQUENCY	= 50+/-	YRS
OVERTOPPING ELEVATION	= 34.5	FT
DATE OF SURVEY	= 3/22/2012	
W.S.ELEVATION AT DATE OF SURVEY	= 30.3	FT

REVISIONS

8/17/99

10:52:34 PM
11/5/2012 Bertie #17\Erosion Control\BERTIE17_EC_dsn_PSH4_C&G.dgn
10/22/2012

EROSION CONTROL PLAN

NOTES: ANY DEVIATION FROM OPTIONS GIVEN WILL REQUIRE PRIOR APPROVAL BY ENGINEER.

ADDITIONAL EROSION CONTROL DEVICES MAY NEED TO BE INSTALLED AS DIRECTED BY THE ENGINEER.

ROADSIDE ENVIRONMENTAL UNIT
DEPARTMENT OF TRANSPORTATION
DIVISION OF HIGHWAYS
RALEIGH, N.C.
2012 STANDARD SPECIFICATIONS

PROJECT REFERENCE NO.	SHEET NO.
17BP.I.R.23	EC-02/CONST.04
R/W SHEET NO.	
ROADWAY DESIGN ENGINEER	HYDRAULICS ENGINEER

NORTH CAROLINA PROFESSIONAL SEAL 034959 ENGINEER DUSTIN D. CREECH 10/22/2012

Std. #	Description	Symbol
1605.01	Temporary Silt Fence	
1632.03	Rock Inlet Sediment Trap Type C	
	Coir Fiber Wattle Break	-CFW-
	Turbidity Curtain	
	Coir Fiber Wattle Barrier	

DUSTIN CREECH
LEVEL III NAME

3019
LEVEL III CERTIFICATION NO.

WETHERILL ENGINEERING
559 Jones Franklin Rd. Suite 164
Raleigh, N.C. 27606
Liscense No. F-0377
Bus: 919 851 8077
Fax: 919 851 8107
TRANSPORTATION PLANNING/DESIGN - BRIDGE/STRUCTURE DESIGN
CIVIL/SITE DESIGN - GIS/GPS - CONSTRUCTION OBSERVATION

N
NC GRID
NAD 83/CORS 96

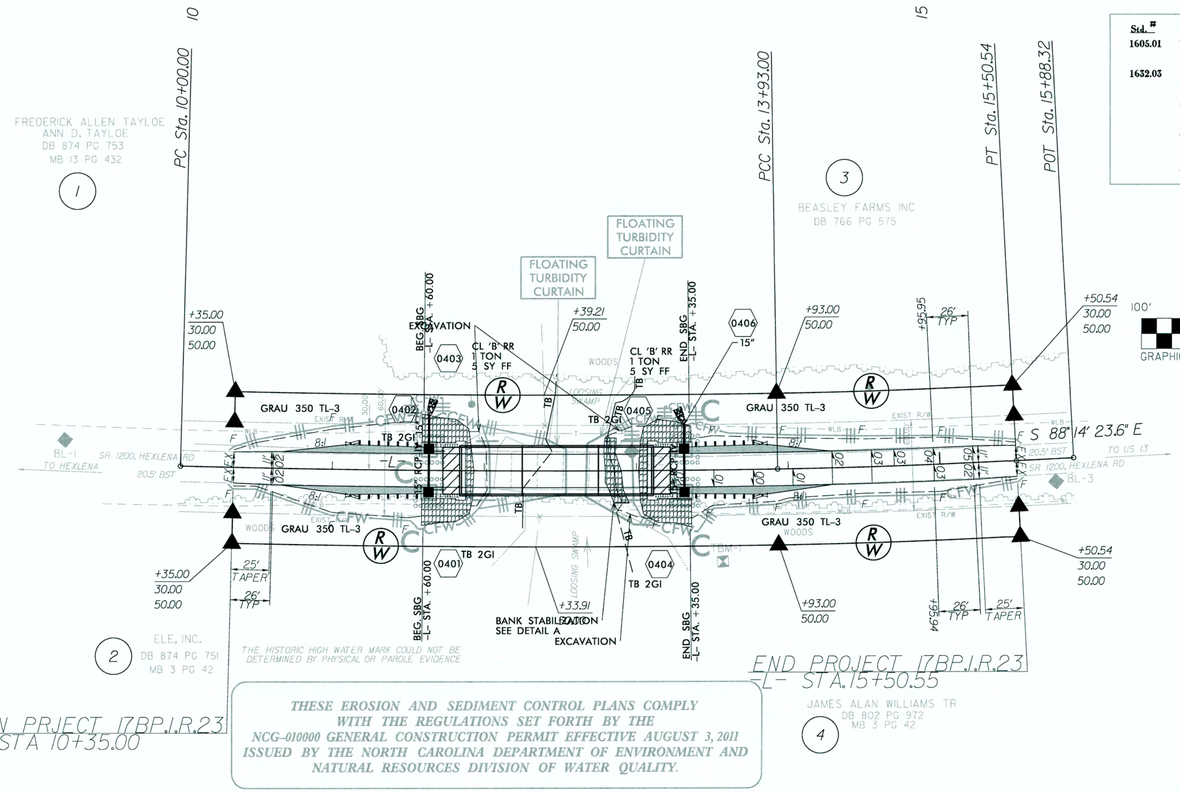

THESE EROSION AND SEDIMENT CONTROL PLANS COMPLY WITH THE REGULATIONS SET FORTH BY THE NCG-010000 GENERAL CONSTRUCTION PERMIT EFFECTIVE AUGUST 3, 2011 ISSUED BY THE NORTH CAROLINA DEPARTMENT OF ENVIRONMENT AND NATURAL RESOURCES DIVISION OF WATER QUALITY.

GRAPHIC SCALE 100' 0' 100' 200' 300'

2012 STANDARD DRAWINGS

1604.01	Railroad Erosion Control Detail	1632.01	Rock Inlet Sediment Trap Type A
1605.01	Temporary Silt Fence	1632.02	Rock Inlet Sediment Trap Type B
1606.01	Special Sediment Control Fence	1632.03	Rock Inlet Sediment Trap Type C
1607.01	Gravel Construction Entrance	1633.01	Temporary Rock Silt Check Type A
1622.01	Temporary Berms and Slope Drains	1633.02	Temporary Rock Silt Check Type B
1630.01	Riser Basin	1634.01	Temporary Rock Sediment Dam Type A
1630.02	Silt Basin Type B	1634.02	Temporary Rock Sediment Dam Type B
1630.03	Temporary Silt Ditch	1635.01	Rock Pipe Inlet Sediment Trap Type A
1630.04	Stilling Basin	1635.02	Rock Pipe Inlet Sediment Trap Type B
1630.05	Temporary Diversion	1640.01	Coir Fiber Baffle
1630.06	Special Stilling Basin	1645.01	Temporary Stream Crossing
1631.01	Matting Installation		

DATUM DESCRIPTION

THE LOCALIZED COORDINATE SYSTEM DEVELOPED FOR THIS PROJECT IS BASED ON THE STATE PLANE COORDINATES ESTABLISHED BY JOYNER KEENY FOR MONUMENT "BL-2"
WITH NAD 83/CORS 96 STATE PLANE GRID COORDINATES OF
NORTHING: 892916.72(ft) EASTING: 2593734.79(ft)
ELEVATION: 35.72(ft)
THE AVERAGE COMBINED GRID FACTOR USED ON THIS PROJECT (GROUND TO GRID) IS: 1.000009544

LOCALIZED HORIZONTAL GROUND DISTANCE FROM "BL-2" TO -L- STATION 10+35.00 IS
N 87° 27' 18.5" W 262.08'
ALL LINEAR DIMENSIONS ARE LOCALIZED HORIZONTAL DISTANCES
VERTICAL DATUM USED IS NAVD 88

DETAIL A
ABUTMENT EXCAVATION & BANK STABILIZATION
(NOT TO SCALE)

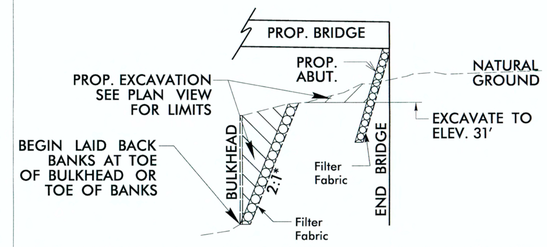

*NOTE: MAINTAIN 2:1 LAID BACK BANKS TO 5Ft. BEYOND OUT-TO-OUT PROP. BRIDGE FACE.

QUANTITIES REFLECT BANK STABILIZATION ONLY
Type of Liner = 24.9 TONS,
CL. II Rip-Rap
Filter Fabric = 26.5 SQ. YDS.

-L- STA. 12 + 85

℄ -L- STA. 12 + 47.5
PROP. 1@40', 1@50', 1@35' 21" CORED SLAB
(2'-6" DEEP CAP)
PROP. GRADE = 36.95'
SKEW = 90

TBM-1 ELEVATION = 33.07
N 892840 E 2593789
BL STATION 9+38.00 68 RIGHT
BRIDGE SPIKE IN BASE OF 40" BLACK GUM

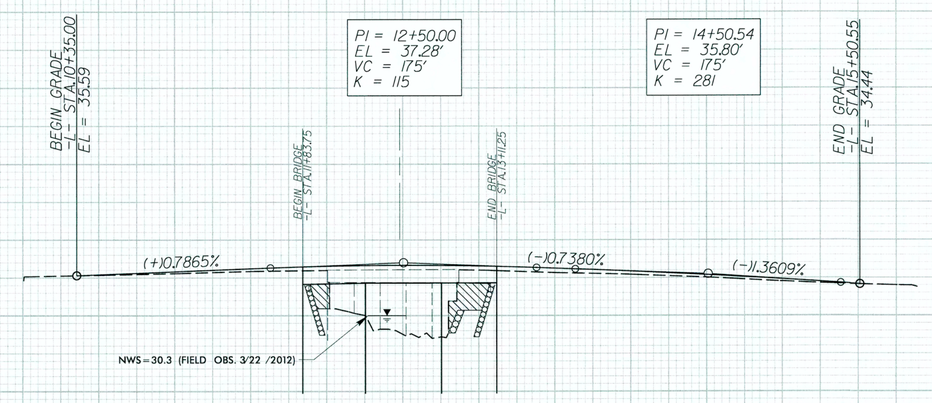

BRIDGE HYDRAULIC DATA

DESIGN DISCHARGE	= 1,700	CFS
DESIGN FREQUENCY	= 25	YRS
DESIGN HW ELEVATION	= 34.4	FT
BASE DISCHARGE	= 2,663	CFS
BASE FREQUENCY	= 100	YRS
BASE HW ELEVATION	= 35.16	FT
OVERTOPPING DISCHARGE	= 2,100	CFS
OVERTOPPING FREQUENCY	= 50+/-	YRS
OVERTOPPING ELEVATION	= 34.5	FT
DATE OF SURVEY	= 3/22/2012	
W.S. ELEVATION AT DATE OF SURVEY	= 30.3	FT

REVISIONS

8/17/99

10/22/2012 4:55:55 PM
R:\2012\Bertie "17\Erosion Control\BERTIE17_EC_dsp_PSH4_FINAL.dgn

PROJECT REFERENCE NO.	SHEET NO.
17BP.1.R.23	EC-5
ROADWAY DESIGN ENGINEER	HYDRAULICS ENGINEER

DIVISION OF HIGHWAYS
STATE OF NORTH CAROLINA

SOIL STABILIZATION SUMMARY SHEET

MATTING FOR EROSION CONTROL

CONST SHEET NO.	LINE	FROM STATION	TO STATION	SIDE	ESTIMATE (SY)
4	-L-	10+35	11+00	LT	12.2
4	-L-	13+10	14+50	LT	73.5
				SUBTOTAL	85.7
MISCELLANEOUS MATTING TO BE INSTALLED AS DIRECTED BY THE ENGINEER					
				TOTAL	85.7
				SAY	100

MATTING FOR EROSION CONTROL

CONST SHEET NO.	LINE	FROM STATION	TO STATION	SIDE	ESTIMATE (SY)

17BP.1.R.23	EC-6

DIVISION OF HIGHWAYS
STATE OF NORTH CAROLINA

SOIL STABILIZATION TIMEFRAMES

SITE DESCRIPTION	STABILIZATION TIME	TIMEFRAME EXCEPTIONS
PERIMETER DIKES, SWALES, DITCHES AND SLOPES	7 DAYS	NONE
HIGH QUALITY WATER (HQW) ZONES	7 DAYS	NONE
SLOPES STEEPER THAN 3:1	7 DAYS	IF SLOPES ARE 10' OR LESS IN LENGTH AND ARE NOT STEEPER THAN 2:1, 14 DAYS ARE ALLOWED.
SLOPES 3:1 OR FLATTER	14 DAYS	7 DAYS FOR SLOPES GREATER THAN 50' IN LENGTH.
ALL OTHER AREAS WITH SLOPES FLATTER THAN 4:1	14 DAYS	NONE, EXCEPT FOR PERIMETERS AND HQW ZONES.

PROJECT REFERENCE NO.	SHEET NO.
17BP.I.R.23	U0-1

UTILITIES BY OTHERS

NOTE:
ALL PROPOSED UTILITY WORK SHOWN ON THIS SHEET WILL BE DONE BY OTHERS

WETHERILL ENGINEERING
559 Jones Franklin Rd. Suite 164
Raleigh, N.C. 27606
License No. F-0377
Bus: 919 851 8077
Fax: 919 851 8107
TRANSPORTATION PLANNING/DESIGN - BRIDGE/STRUCTURE DESIGN
CIVIL/SITE DESIGN - GIS/GPS - CONSTRUCTION OBSERVATION

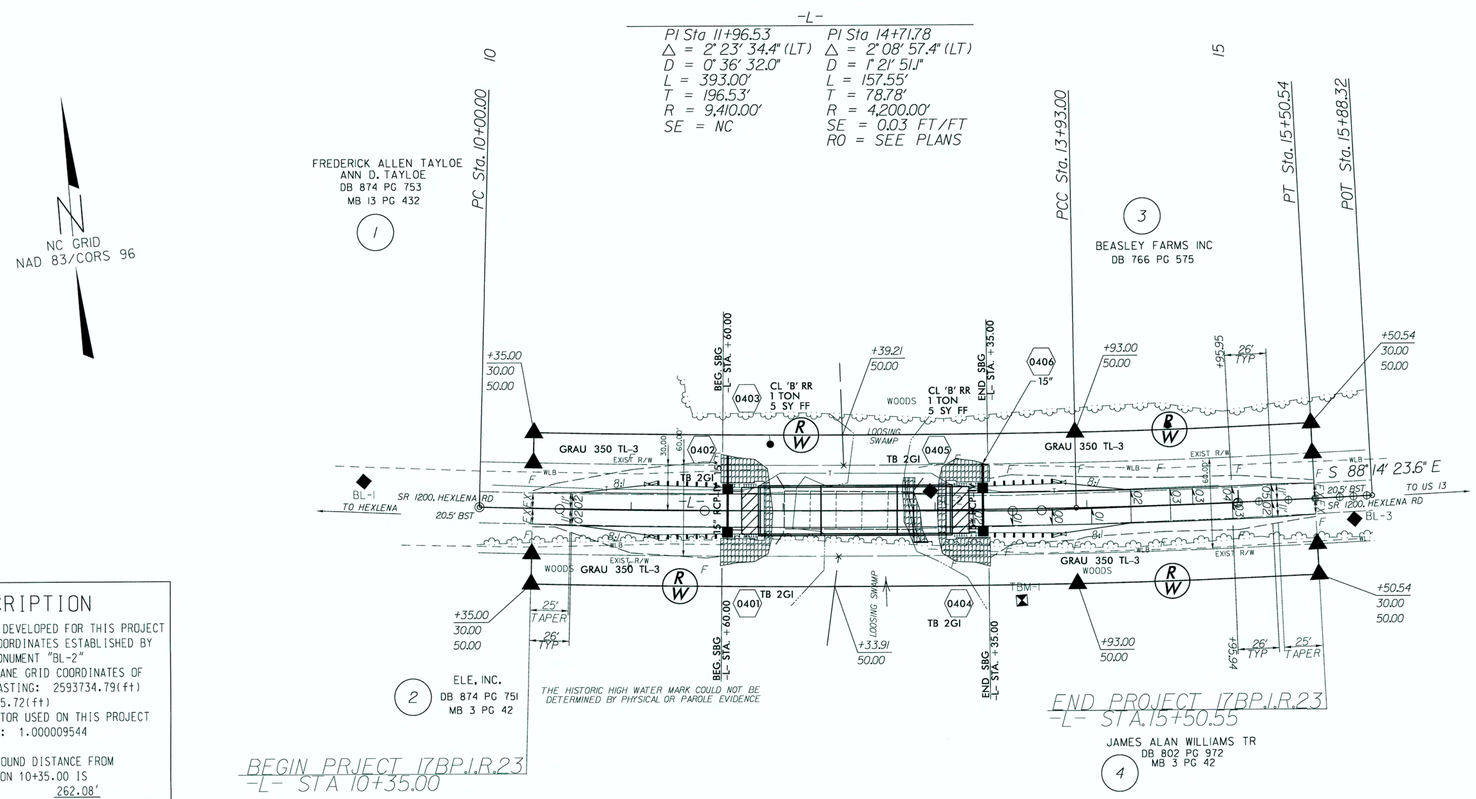

DATUM DESCRIPTION

THE LOCALIZED COORDINATE SYSTEM DEVELOPED FOR THIS PROJECT IS BASED ON THE STATE PLANE COORDINATES ESTABLISHED BY JOYNER KEENY FOR MONUMENT "BL-2"
WITH NAD 83/CORS 96 STATE PLANE GRID COORDINATES OF
NORTHING: 892916.72(ft) EASTING: 2593734.79(ft)
ELEVATION: 35.72(ft)
THE AVERAGE COMBINED GRID FACTOR USED ON THIS PROJECT (GROUND TO GRID) IS: 1.000009544

LOCALIZED HORIZONTAL GROUND DISTANCE FROM "BL-2" TO -L- STATION 10+35.00 IS
N 87° 27' 18.5" W 262.08'
ALL LINEAR DIMENSIONS ARE LOCALIZED HORIZONTAL DISTANCES
VERTICAL DATUM USED IS NAVD 88

BL-1 - N=892955.57, E=2593363.90, ELEV.=33.84
BL-2 - N=892916.72, E=2593734.79, ELEV.=35.72
BL-3 - N=892873.50, E=2594011.76, ELEV.=33.89

TBM-1 ELEVATION = 33.07
N 892840 E 2593789
BL STATION 9+38.00 68' RIGHT
BRIDGE SPIKE IN BASE OF 40" BLACK GUM

STRUCTURE #070017, PROJ. #17BP.I.R.23

BERTIE COUNTY
ON SR 1200, HEXLENA RD
OVER LOOSING SWAMP

NOTE:
EXISTING TELEPHONE CABLE WILL REMAIN IN PLACE DURING CONSTRUCTION. CENTURYLINK WILL EXPOSE AND RELOCATE AS NEEDED FOR THE INSTALLATION OF GUARDRAIL.

CENTURYLINK CONTACT IS SCOTT PEAVEY 252-332-8011
SCOTT.A.PEAVEY@CENTURYLINK.COM

CONTACT CENTURYLINK IMMEDIATELY IF THE TELEPHONE CABLE IS EXPOSED OR DAMAGED DURING CONSTRUCTION.

REVISIONS

5/14/99

10/22/2012 1:59:21 PM
Bertie #17\Utilities\U0-1 pb.dgn

PROJ. REFERENCE NO.	SHEET NO.
17BP.1.R.23	X-1A

STATE OF NORTH CAROLINA
DIVISION OF HIGHWAYS

NOTE: EMBANKMENT COLUMN DOES NOT INCLUDE BACKFILL FOR UNDERCUT

CROSS-SECTION SUMMARY

Station L	Uncl. Exc. (cu. yd.)	Embt (cu. yd.)
10+35.00	0	0
10+50.00	1	1
11+00.00	3	30
11+50.00	2	81
11+83.75	1	71

Station L	Uncl. Exc. (cu. yd.)	Embt (cu. yd.)
13+11.25	0	0
13+50.00	1	27
13+93.00	1	26
14+00.00	1	3
14+50.00	1	15
14+60.00	1	1

Approximate quantities only. Unclassified excavation, borrow excavation, shoulder borrow, fine grading, clearing and grubbing, breaking of existing pavement and removal of existing pavement will be paid for at the lump sum price for "Grading".

0 2.5 5	PROJ. REFERENCE NO.	SHEET NO.
	17BP.1.R.23	X-1

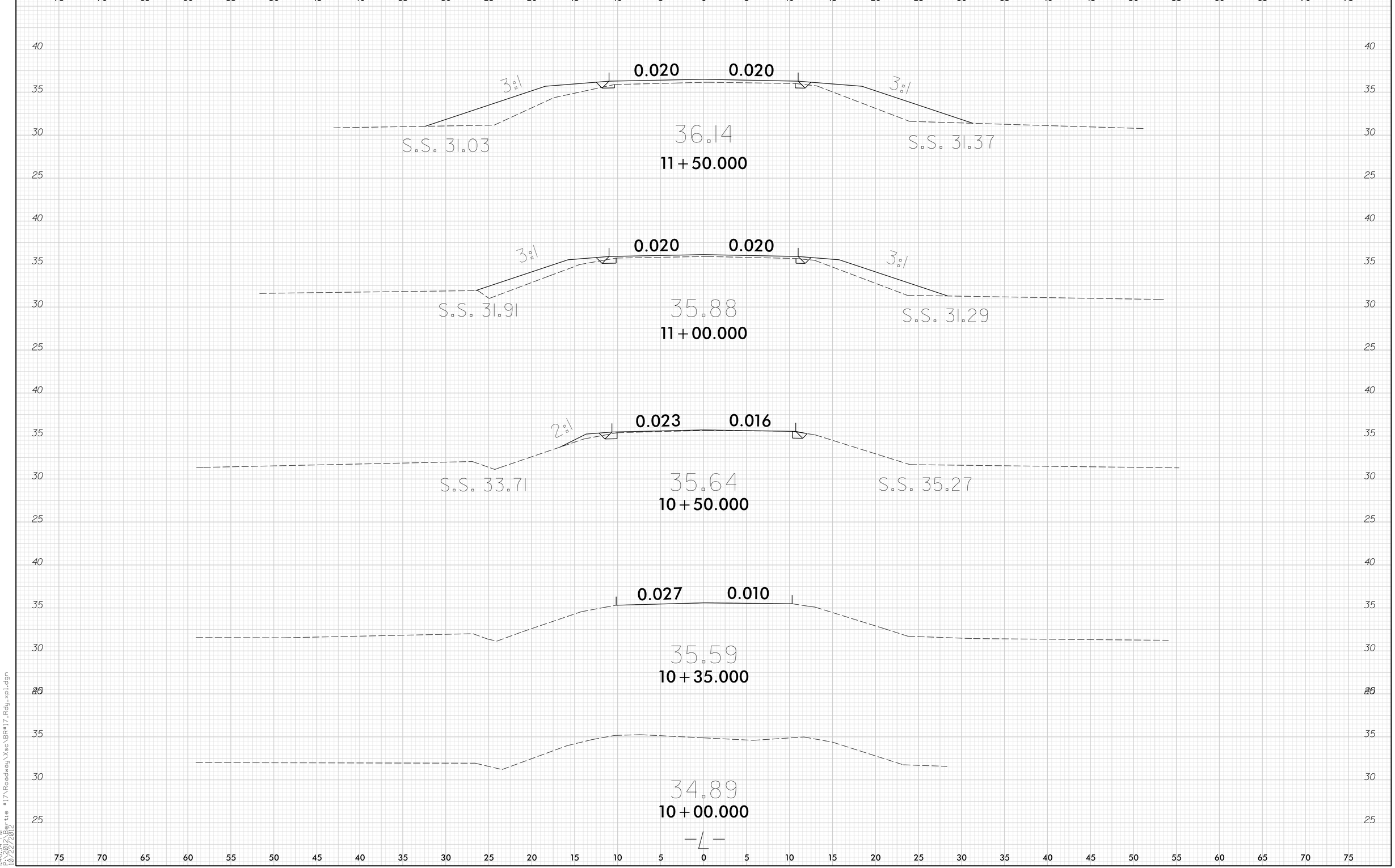

8/23/99

1:46:54 PM
10/22/2012
Retie #17\Roadway\Xsc\BR#17_Rdy_xpl.dgn

0 2.5 5	PROJ. REFERENCE NO.	SHEET NO.
	17BP.1.R.23	X-2

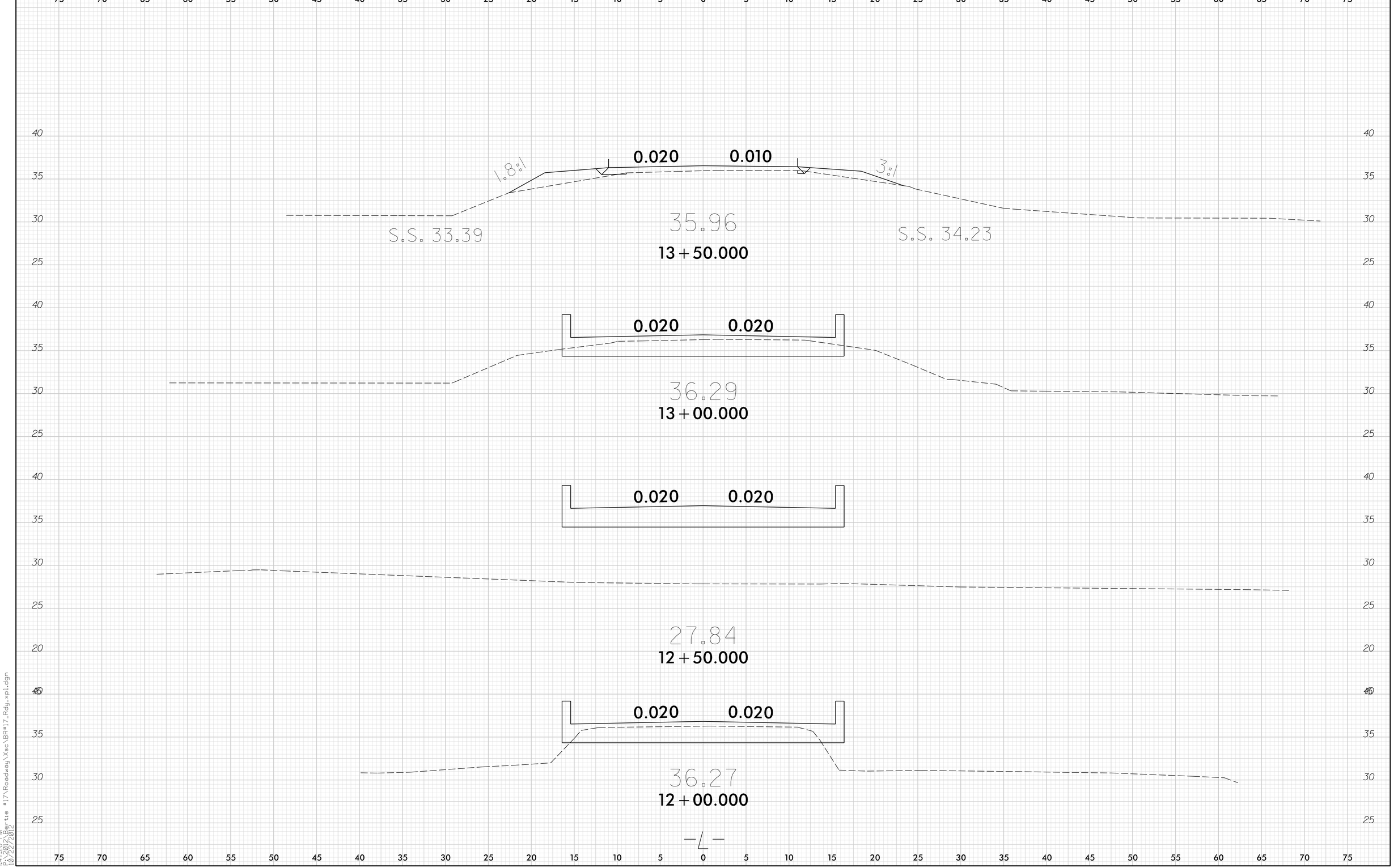

8/23/99

I:47:20 PM
E:\2012\Retie #17\Roadway\Xsc\BR#17_Rdy_xpl.dgn
10/22/2012

0 2.5 5	PROJ. REFERENCE NO.	SHEET NO.
	17BP.1.R.23	X-3

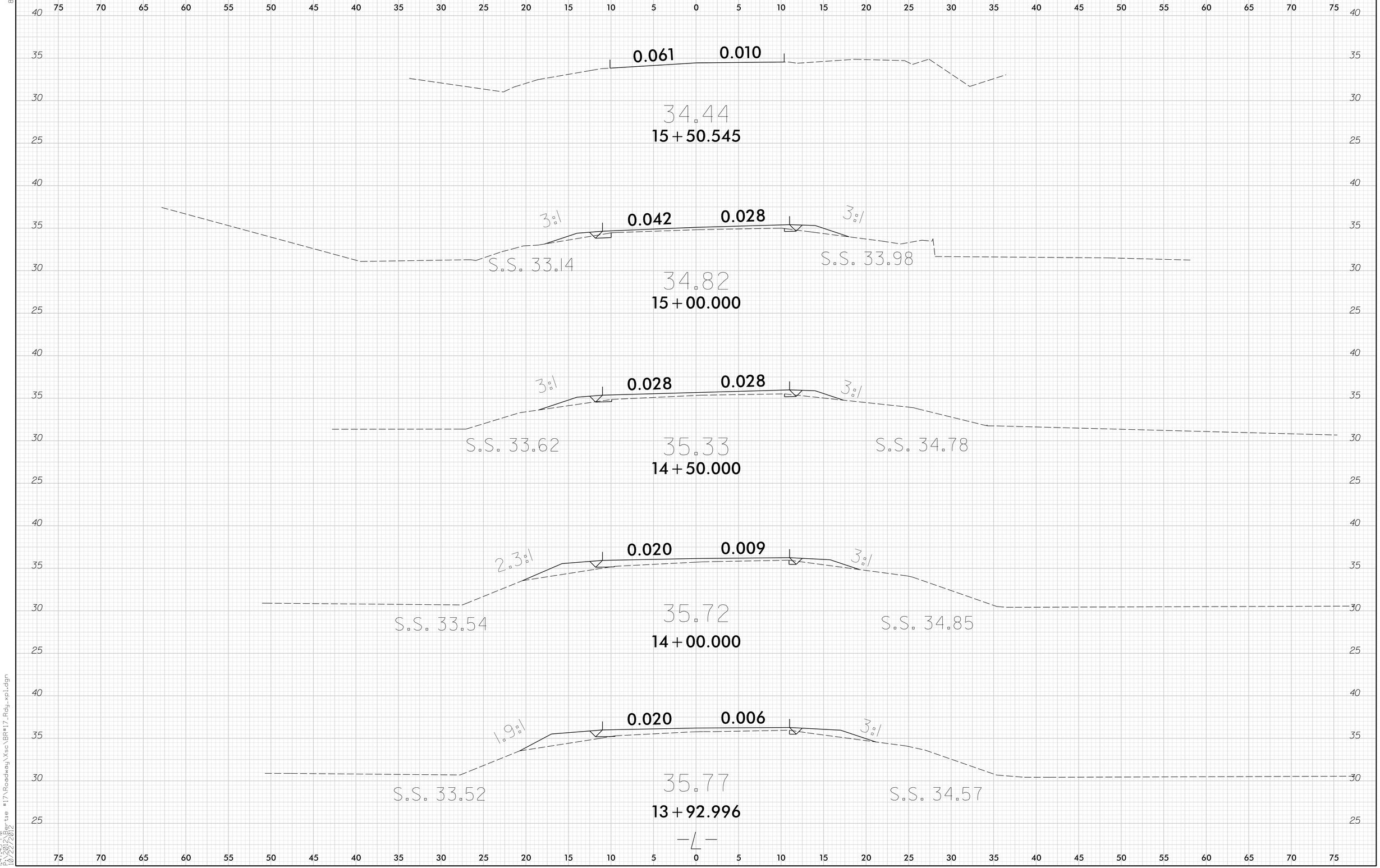

8/23/99

I47:45 PM
B:\Bertie #17\Roadway\Xsc\BR#17_Rdy_xpl.dgn
10/22/2012

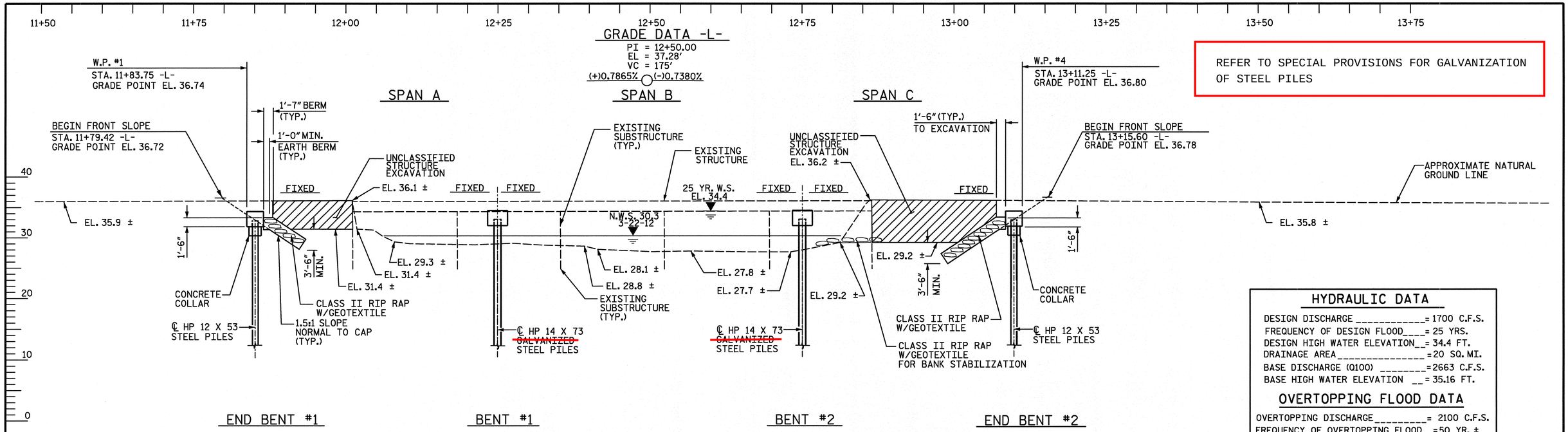

SECTION ALONG -L-

REFER TO SPECIAL PROVISIONS FOR GALVANIZATION OF STEEL PILES

HYDRAULIC DATA

DESIGN DISCHARGE _____ = 1700 C.F.S.
FREQUENCY OF DESIGN FLOOD____ = 25 YRS.
DESIGN HIGH WATER ELEVATION__ = 34.4 FT.
DRAINAGE AREA _____ = 20 SQ. MI.
BASE DISCHARGE (Q100) _____ = 2663 C.F.S.
BASE HIGH WATER ELEVATION __ = 35.16 FT.

OVERTOPPING FLOOD DATA

OVERTOPPING DISCHARGE_____ = 2100 C.F.S.
FREQUENCY OF OVERTOPPING FLOOD__ = 50 YR. ±
OVERTOPPING FLOOD ELEVATION____ = 34.5 FT.*

* OT OCCURS @ EXISTING SAG (APPROX. -L- STA. 17+90)

HORIZONTAL CURVE DATA -L-

PI Sta 11+96.53
Δ = 2° 23' 34.4" (LT)
D = 0° 36' 32.0"
L = 393.00'
T = 196.53'
R = 9,410.00'

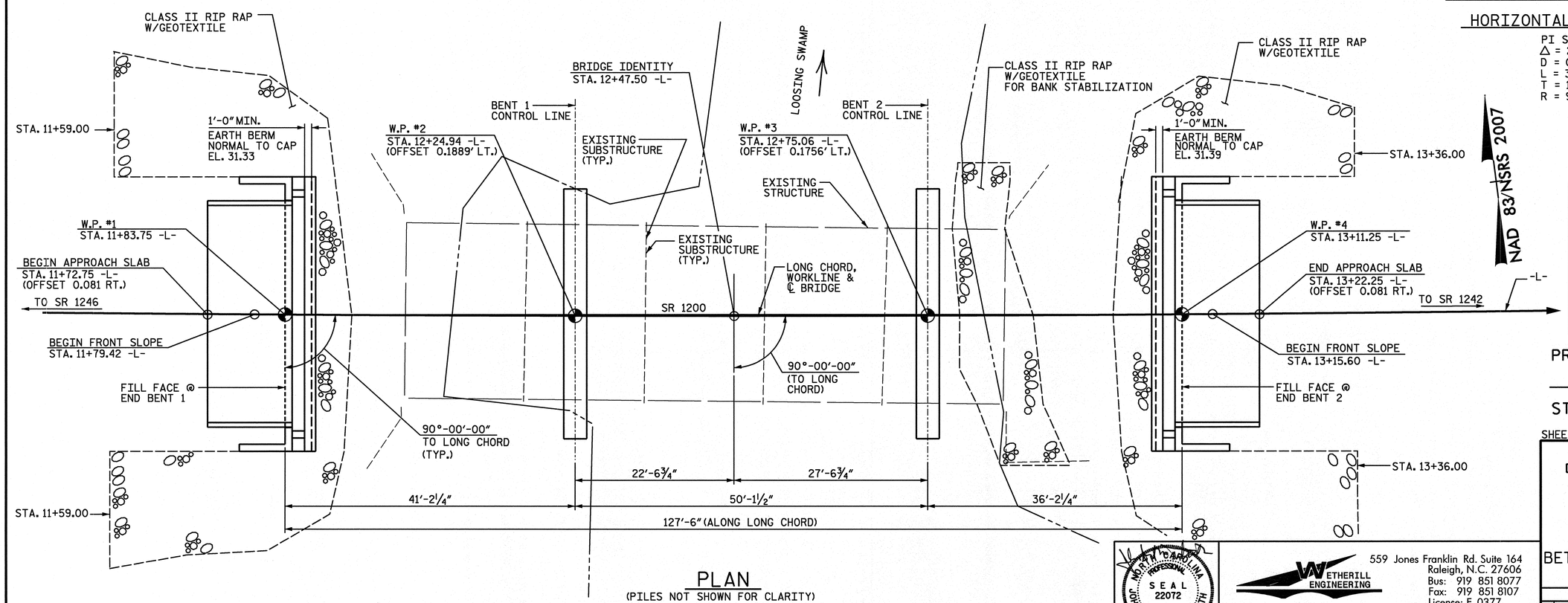

PLAN
(PILES NOT SHOT FOR CLARITY)

I HEREBY CERTIFY THESE PLANS ARE THE AS-BUILT PLANS

PROJECT NO. 17BP.1.R.23
BERTIE COUNTY
STATION: 12+47.50 -L-

SHEET 1 OF 3 REPLACES BRIDGE NO. 17

STATE OF NORTH CAROLINA
DEPARTMENT OF TRANSPORTATION
RALEIGH

GENERAL DRAWING
FOR BRIDGE ON SR 1200
OVER LOOSING SWAMP
BETWEEN SR 1246 AND SR 1242

NORTH CAROLINA PROFESSIONAL SEAL 22072 ENGINEER JOHN ARTHUR DILWORTH 9-4-12

WETHERILL ENGINEERING
559 Jones Franklin Rd. Suite 164
Raleigh, N.C. 27606
Bus: 919 851 8077
Fax: 919 851 8107
License: F-0377
TRANSPORTATION PLANNING/DESIGN - BRIDGE/STRUCTURE DESIGN
CIVIL/SITE DESIGN - GIS/GPS - CONSTRUCTION OBSERVATION

REVISIONS							SHEET NO.
NO.	BY:	DATE:	NO.	BY:	DATE:		S-1
1			3				TOTAL SHEETS
2			4				20

DRAWN BY : J. PENDERGRAFT DATE : 6/12
CHECKED BY : J. DILWORTH DATE : 6/12

P:\2012\Bertie #17\Structures\DGN\BR #017_STR_GD1.dgn
9/4/2012 8:57:33 AM

TBM: BL-2 "TRAVERSE STATION MARKER -L- STA. 12+96.84 OFFSET 13.10' LT" (N 892916.72, E 2593734.79) ELEV. 35.72'

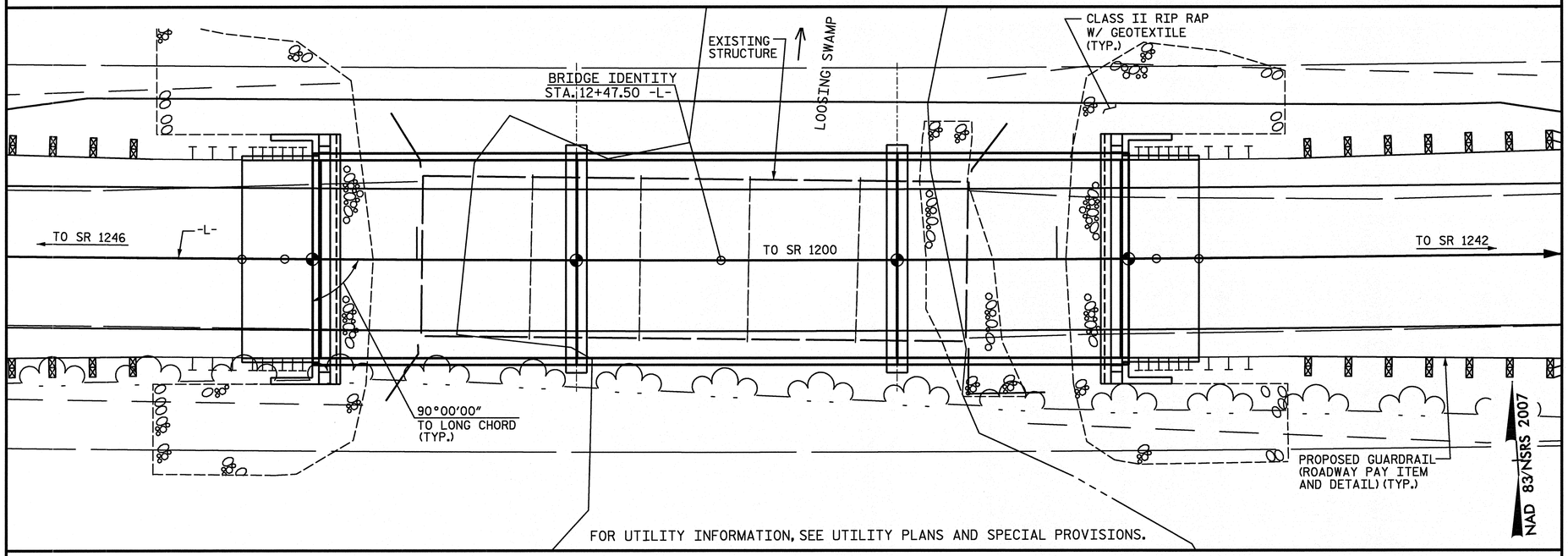

LOCATION SKETCH

NOTES:

ASSUMED LIVE LOAD = HL-93 OR ALTERNATE LOADING.

FOR OTHER DESIGN DATA AND GENERAL NOTES, SEE SHEET SN.

FOR EROSION CONTROL MEASURES, SEE EROSION CONTROL PLANS.

THIS BRIDGE HAS BEEN DESIGNED IN ACCORDANCE WITH THE AASHTO LRFD BRIDGE DESIGN SPECIFICATIONS FOR SEISMIC PERFORMANCE ZONE 1.

THE EXISTING STRUCTURE CONSISTING OF 1 SPAN @ 17'-6", 3 SPANS @ 17'-1" AND 1 SPAN @ 17'-6" WITH A TIMBER FLOOR ON TIMBER JOIST SUPERSTRUCTURE AND A CLEAR ROADWAY WIDTH OF 25.2' ON A SUBSTRUCTURE CONSISTING OF TIMBER CAPS ON TIMBER PILES AND LOCATED AT THE PROPOSED STRUCTURE LOCATION SHALL BE REMOVED.

REMOVAL OF THE EXISTING BRIDGE SHALL BE PERFORMED SO AS NOT TO ALLOW DEBRIS TO FALL INTO THE WATER. THE CONTRACTOR SHALL REMOVE THE BRIDGE AND SUBMIT PLANS FOR DEMOLITION IN ACCORDANCE WITH ARTICLE 402-2 OF THE STANDARD SPECIFICATIONS.

THE MATERIAL SHOWN IN THE CROSS-HATCHED AREA SHALL BE EXCAVATED FOR A DISTANCE OF 30 FT. EACH SIDE OF CENTERLINE ROADWAY AS DIRECTED BY ENGINEER. THIS WORK WILL BE PAID FOR AT THE CONTRACT LUMP SUM PRICE FOR UNCLASSIFIED STRUCTURE EXCAVATION. SEE SECTION 412 OF THE STANDARD SPECIFICATIONS.

THE SUBSTRUCTURE OF THE EXISTING BRIDGE INDICATED ON THE PLANS IS FROM THE BEST INFORMATION AVAILABLE. SINCE THIS INFORMATION IS SHOWN FOR THE CONVENIENCE OF THE CONTRACTOR, THE CONTRACTOR SHALL HAVE NO CLAIM WHATSOEVER AGAINST THE DEPARTMENT OF TRANSPORTATION FOR ANY DELAYS OR ADDITIONAL COST INCURRED BASED ON DIFFERENCE BETWEEN THE EXISTING BRIDGE SUBSTRUCTURE SHOWN ON THE PLANS AND THE ACTUAL CONDITIONS AT THE PROJECT SITE.

ASPHALT WEARING SURFACE IS INCLUDED IN ROADWAY QUANTITY ON ROADWAY PLANS.

THIS STRUCTURE HAS BEEN DESIGNED IN ACCORDANCE WITH HEC 18, "EVALUATING SCOUR AT BRIDGES", MAY 2001.

FOR SUBMITTAL OF WORKING DRAWINGS, SEE SPECIAL PROVISIONS.

FOR FALSEWORK AND FORMWORK, SEE SPECIAL PROVISIONS.

FOR CRANE SAFETY, SEE SPECIAL PROVISIONS.

FOR GROUT FOR STRUCTURES, SEE SPECIAL PROVISIONS.

FOR PILE DRIVING CRITERIA, SEE SPECIAL PROVISIONS.

TOTAL BILL OF MATERIAL

	REMOVAL OF EXISTING STRUCTURE	PDA TESTING	UNCLASSIFIED STRUCTURE EXCAVATION	CLASS A CONCRETE	BRIDGE APPROACH SLABS	REINFORCING STEEL	HP 12 x 53 STEEL PILES		HP 14 x 73 GALVANIZED STEEL PILES		PILE REDRIVES	VERTICAL CONCRETE BARRIER RAIL	RIP RAP CLASS II (2'-0" THICK)	GEOTEXTILE FOR DRAINAGE	ELASTOMERIC BEARINGS	3'-0" X 1'-9" PRESTRESSED CONCRETE CORED SLABS	
	LUMP SUM	EACH	LUMP SUM	CU. YDS.	LUMP SUM	LBS.	NO.	LIN. FT.	NO.	LIN. FT.	EACH	LIN. FT.	TONS	SQ. YD.	LUMP SUM	NO.	LIN. FT.
SUPERSTRUCTURE	LUMP SUM				LUMP SUM							250.51				33	1375'-0"
END BENT 1			LUMP SUM	14.3		2127	7	441			2		162	181			
BENT 1				10.8		2162			8	624	2						
BENT 2				10.8		2162			8	632	2						
END BENT 2			LUMP SUM	14.3		2127	7	420			2		267	296			
TOTAL	LUMP SUM	1	LUMP SUM	50.2	LUMP SUM	8578	14	861	16	1256	8	250.51	429	477	LUMP SUM	33	1375'-0"

FOUNDATION NOTES:

FOR PILES, SEE SECTION 450 OF THE STANDARD SPECIFICATIONS.

PILES AT END BENT NO. 1 ARE DESIGNED FOR A FACTORED RESISTANCE OF 60 TONS PER PILE. DRIVE PILES TO A REQUIRED DRIVING RESISTANCE OF 100 TONS.

PILES AT END BENT NO. 2 ARE DESIGNED FOR A FACTORED RESISTANCE OF 55 TONS PER PILE. DRIVE PILES TO A REQUIRED DRIVING RESISTANCE OF 95 TONS.

PILES AT BENT NO. 1 ARE DESIGNED FOR A FACTORED RESISTANCE OF 100 TONS PER PILE. DRIVE PILES TO A REQUIRED DRIVING RESISTANCE OF 200 TONS. THIS REQUIRED DRIVING RESISTANCE INCLUDES ADDITIONAL RESISTANCE FOR DOWNDRAG OR SCOUR.

INSTALL PILES AT BENT NO. 1 TO A TIP ELEVATION NO HIGHER THAN 3.5 FEET.

PILES AT BENT NO. 2 ARE DESIGNED FOR A FACTORED RESISTANCE OF 100 TONS PER PILE. DRIVE PILES TO A REQUIRED DRIVING RESISTANCE OF 190 TONS. THIS REQUIRED DRIVING RESISTANCE INCLUDES ADDITIONAL RESISTANCE FOR DOWNDRAG OR SCOUR.

INSTALL PILES AT BENT NO. 2 TO A TIP ELEVATION NO HIGHER THAN 2.3 FEET.

THE SCOUR CRITICAL ELEVATION FOR BENT NO. 1 AND BENT NO. 2 IS ELEVATION 18.0 FEET. SCOUR CRITICAL ELEVATIONS ARE USED TO MONITOR POSSIBLE SCOUR PROBLEMS DURING THE LIFE OF THE STRUCTURE.

TESTING PILES WITH THE PILE DRIVING ANALYZER (PDA) DURING DRIVING, RESTRIKING OR REDRIVING MAY BE REQUIRED. THE ENGINEER WILL DETERMINE THE NEED FOR PDA TESTING. FOR PDA TESTING, SEE SECTION 450 OF THE STANDARD SPECIFICATIONS.

IT HAS BEEN ESTIMATED THAT A HAMMER WITH AN EQUIVALENT RATED ENERGY IN THE RANGE OF 30 TO 33 FT.-KIPS PER BLOW WILL BE REQUIRED TO DRIVE PILES AT END BENT NO. 1. AND END BENT NO. 2. THIS ESTIMATED ENERGY RANGE DOES NOT RELEASE THE CONTRACTOR FROM PROVIDING EQUIPMENT IN ACCORDANCE WITH SUBARTICLE 450-3(D)(2) OF THE STANDARD SPECIFICATIONS.

IT HAS BEEN ESTIMATED THAT A HAMMER WITH AN EQUIVALENT RATED ENERGY IN THE RANGE OF 40 TO 45 FT.-KIPS PER BLOW WILL BE REQUIRED TO DRIVE PILES AT BENT NO. 1 AND BENT NO. 2. THIS ESTIMATED ENERGY RANGE DOES NOT RELEASE THE CONTRACTOR FROM PROVIDING EQUIPMENT IN ACCORDANCE WITH SUBARTICLE 450-3(D)(2) OF THE STANDARD SPECIFICATIONS.

PROJECT NO. 17BP.1.R.23
BERTIE COUNTY
STATION: 12+47.50 -L-

SHEET 2 OF 3 REPLACES BRIDGE NO. 17

STATE OF NORTH CAROLINA
DEPARTMENT OF TRANSPORTATION
RALEIGH

GENERAL DRAWING
FOR BRIDGE ON SR 1200
OVER LOOSING SWAMP
BETWEEN SR 1246 AND SR 1242

NORTH CAROLINA PROFESSIONAL SEAL 22072 ENGINEER JOHN ARTHUR DILWORTH 9-4-12

WETHERILL ENGINEERING
559 Jones Franklin Rd. Suite 164
Raleigh, N.C. 27606
Bus: 919 851 8077
Fax: 919 851 8107
License: F-0377
TRANSPORTATION PLANNING/DESIGN - BRIDGE/STRUCTURE DESIGN
CIVIL/SITE DESIGN - GIS/GPS - CONSTRUCTION OBSERVATION

REVISIONS						SHEET NO.
NO.	BY:	DATE:	NO.	BY:	DATE:	S-2
1			3			TOTAL SHEETS
2			4			20

DRAWN BY : J. PENDERGRAFT DATE : 6/12
CHECKED BY : J. DILWORTH DATE : 6/12

P:\2012\Bertie #17\Structures\OGNBR#017_STR_TS1.dgn
9/4/2012 9:24:54 AM

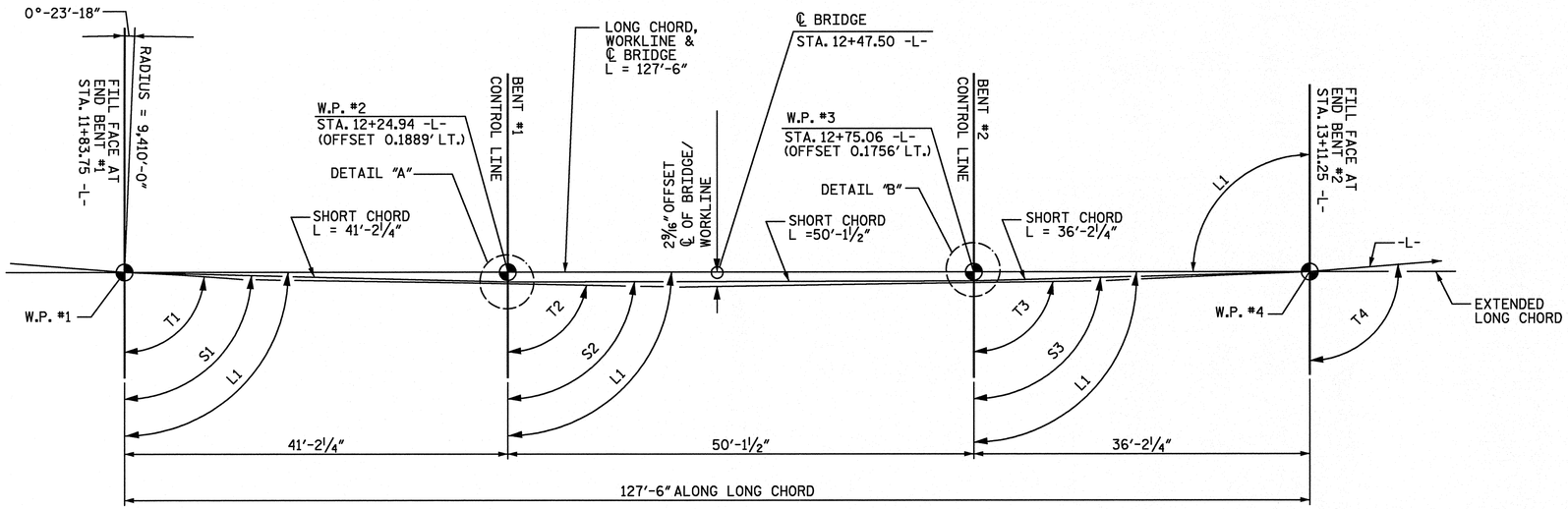

LONG CHORD LAYOUT

NOTE: END BENTS AND BENTS ARE PARALLEL

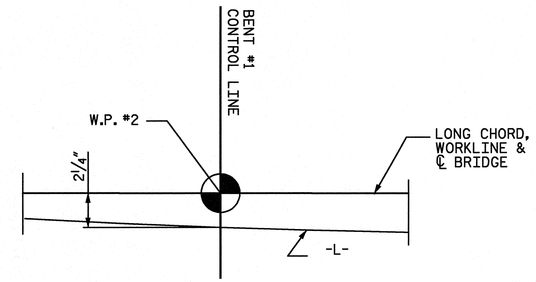

DETAIL "A"

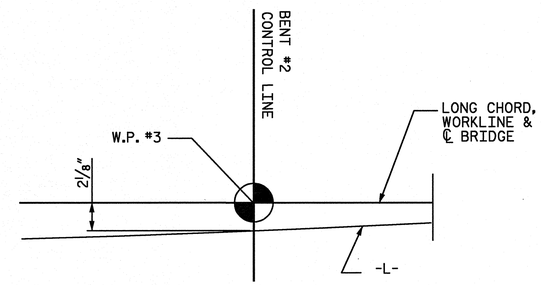

DETAIL "B"

ANGLES					
LONG CHORD		SHORT CHORD		TANGENT TO CURVE	
L1	90°-00'-00"	S1	89°-44'-14"	T1	89°-36'-43"
		S2	90°-00'-55"	T2	89°-51'-45"
		S3	90°-16'-41"	T3	90°-10'-04"
				T4	90°-23'-17"

HORIZONTAL CURVE DATA -L-

PI Sta 11+96.53
Δ = 2° 23' 34.4" (LT)
D = 0° 36' 32.0"
L = 393.00'
T = 196.53'
R = 9,410.00'

PROJECT NO. 17BP.1.R.23
BERTIE COUNTY
STATION: 12+47.50 -L-

SHEET 3 OF 3 REPLACES BRIDGE NO. 17

STATE OF NORTH CAROLINA
DEPARTMENT OF TRANSPORTATION
RALEIGH

GENERAL DRAWING

FOR BRIDGE ON SR 1200
OVER LOOSING SWAMP
BETWEEN SR 1246 AND SR 1242

NORTH CAROLINA PROFESSIONAL SEAL 22072 ENGINEER JOHN ARTHUR DILWORTH 8-21-12

WETHERILL ENGINEERING
559 Jones Franklin Rd. Suite 164
Raleigh, N.C. 27606
Bus: 919 851 8077
Fax: 919 851 8107
License: F-0377
TRANSPORTATION PLANNING/DESIGN - BRIDGE/STRUCTURE DESIGN
CIVIL/SITE DESIGN - GIS/GPS - CONSTRUCTION OBSERVATION

REVISIONS						SHEET NO.
NO.	BY:	DATE:	NO.	BY:	DATE:	S-3
1			3			TOTAL SHEETS
2			4			20

DRAWN BY : J. PENDERGRAFT DATE : 6/12
CHECKED BY : J. DILWORTH DATE : 6/12

P:\2012\Bertie #17\Structures\DGN\BR#017_STR_TS1.dgn
8/21/2012 2:12:30 PM

LOAD AND RESISTANCE FACTOR RATING (LRFD) SUMMARY FOR PRESTRESSED CONCRETE GIRDERS

LEVEL		VEHICLE	WEIGHT (W) (TONS)	CONTROLLING LOAD RATING	MINIMUM RATING FACTORS (RF)	TONS = W X RF	STRENGTH I LIMIT STATE											SERVICE III LIMIT STATE						COMMENT NUMBER
								MOMENT					SHEAR						MOMENT					
							LIVELOAD FACTORS	DISTRIBUTION FACTORS (DF)	RATING FACTOR	SPAN	GIRDER LOCATION	DISTANCE FROM LEFT END OF SPAN (ft)	DISTRIBUTION FACTORS (DF)	RATING FACTOR	SPAN	GIRDER LOCATION	DISTANCE FROM LEFT END OF SPAN (ft)	LIVELOAD FACTORS	DISTRIBUTION FACTORS (DF)	RATING FACTOR	SPAN	GIRDER LOCATION	DISTANCE FROM LEFT END OF SPAN (ft)	
DESIGN LOAD RATING		HL-93(Inv)	N/A	(1)	1.319	--	1.75	0.278	1.76	40'	EL	19.5	0.549	**1.32**	40'	EL	**1.95**	0.80	0.278	1.55	40'	EL	19.5	
		HL-93(Opr)	N/A	--	1.709	--	1.35	0.278	2.28	40'	EL	19.5	0.549	1.71	40'	EL	1.95	N/A	--	--	--	--	--	
		HS-20(Inv)	36.000	(2)	1.540	55.449	1.75	0.278	2.21	40'	EL	19.5	0.549	**1.54**	40'	EL	**1.95**	0.80	0.278	1.94	40'	EL	19.5	
		HS-20(Opr)	36.000	--	1.997	71.878	1.35	0.278	2.86	40'	EL	19.5	0.549	2.00	40'	EL	1.95	N/A	--	--	--	--	--	
LEGAL LOAD RATING	SV	SNSH	13.500	--	3.606	48.687	1.4	0.278	5.10	40'	EL	19.5	0.549	4.13	40'	EL	1.95	0.80	0.278	3.61	40'	EL	19.5	
		SNGARBS2	20.000	--	2.964	59.289	1.4	0.278	4.19	40'	EL	15.6	0.549	3.07	40'	EL	1.95	0.80	0.278	2.96	40'	EL	19.5	
		SNAGRIS2	22.000	--	2.906	63.929	1.4	0.278	4.09	40'	EL	15.6	0.549	2.91	40'	EL	1.95	0.80	0.278	2.92	40'	EL	15.6	
		SNCOTTS3	27.250	--	1.803	49.125	1.4	0.278	2.55	40'	EL	19.5	0.549	2.07	40'	EL	1.95	0.80	0.278	1.80	40'	EL	19.5	
		SNAGGRS4	34.925	--	1.623	56.667	1.4	0.278	2.29	40'	EL	19.5	0.549	1.82	40'	EL	1.95	0.80	0.278	1.62	40'	EL	19.5	
		SNS5A	35.550	--	1.578	56.107	1.4	0.278	2.23	40'	EL	19.5	0.549	1.90	40'	EL	1.95	0.80	0.278	1.58	40'	EL	19.5	
		SNS6A	39.950	--	1.502	59.992	1.4	0.278	2.12	40'	EL	19.5	0.549	1.77	40'	EL	1.95	0.80	0.278	1.50	40'	EL	19.5	
		SNS7B	42.000	(3)	1.432	60.149	1.4	0.278	2.02	40'	EL	19.5	0.549	1.81	40'	EL	1.95	0.80	0.278	**1.43**	40'	EL	**19.5**	
	TTST	TNAGRIT3	33.000	--	1.848	60.976	1.4	0.278	2.61	40'	EL	19.5	0.549	2.08	40'	EL	1.95	0.80	0.278	1.85	40'	EL	19.5	
		TNT4A	33.075	--	1.872	61.901	1.4	0.278	2.65	40'	EL	19.5	0.549	1.98	40'	EL	1.95	0.80	0.278	1.87	40'	EL	19.5	
		TNT6A	41.600	--	1.587	66.032	1.4	0.278	2.24	40'	EL	19.5	0.549	1.94	40'	EL	1.95	0.80	0.278	1.59	40'	EL	19.5	
		TNT7A	42.000	--	1.627	68.354	1.4	0.278	2.30	40'	EL	19.5	0.549	1.79	40'	EL	1.95	0.80	0.278	1.63	40'	EL	19.5	
		TNT7B	42.000	--	1.664	69.888	1.4	0.278	2.35	40'	EL	19.5	0.549	1.72	40'	EL	1.95	0.80	0.278	1.66	40'	EL	19.5	
		TNAGRIT4	43.000	--	1.619	69.61	1.4	0.278	2.28	40'	EL	15.6	0.549	1.65	40'	EL	1.95	0.80	0.278	1.62	40'	EL	19.5	
		TNAGT5A	45.000	--	1.498	67.412	1.4	0.278	2.12	40'	EL	19.5	0.549	1.71	40'	EL	1.95	0.80	0.278	1.50	40'	EL	19.5	
		TNAGT5B	45.000	--	1.455	65.486	1.4	0.278	2.06	40'	EL	19.5	0.549	1.56	40'	EL	1.95	0.80	0.278	1.46	40'	EL	19.5	

LOAD FACTORS:

DESIGN LOAD RATING FACTORS	LIMIT STATE	γ_{DC}	γ_{DW}
	STRENGTH I	1.25	1.50
	SERVICE III	1.00	1.00

NOTES:

MINIMUM RATING FACTORS ARE BASED ON THE STRENGTH I AND SERVICE III LIMIT STATES.

ALLOWABLE STRESSES FOR SERVICE III LIMIT STATE ARE AS REQUIRED FOR DESIGN.

COMMENTS:

1.
2.
3.
4.

(#) CONTROLLING LOAD RATING

(1) DESIGN LOAD RATING (HL-93)
(2) DESIGN LOAD RATING (HS-20)
(3) LEGAL LOAD RATING **
** SEE CHART FOR VEHICLE TYPE

GIRDER LOCATION

I - INTERIOR GIRDER
EL - EXTERIOR LEFT GIRDER
ER - EXTERIOR RIGHT GIRDER

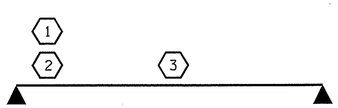

LRFR SUMMARY

FOR SPAN A

PROJECT NO. 17BP.1.R.23
BERTIE COUNTY
STATION: 12+47.50 -L-

STATE OF NORTH CAROLINA
DEPARTMENT OF TRANSPORTATION
RALEIGH

STANDARD
LRFR SUMMARY FOR
40' CORED SLAB UNIT
90° SKEW
(NON-INTERSTATE TRAFFIC)

NORTH CAROLINA PROFESSIONAL SEAL 14045 ENGINEER TIMOTHY L. COGGINS
08/16/12

REVISIONS						SHEET NO.
NO.	BY:	DATE:	NO.	BY:	DATE:	S-4
1			3			TOTAL SHEETS
2			4			20

ASSEMBLED BY : C. J. BUTLER DATE : 08/07/12
CHECKED BY : K.P.SEDAI DATE : 08/10/12
DRAWN BY : CVC 6/10
CHECKED BY : DNS 6/10

16-AUG-2012 09:39
S:\DPG1\Tlm\17BP.1.R.23\cjbutler\17BP.1.R.23_SD_CS.dgn
tcoggins

STD. NO. 21LRFR1_90S_40L

LOAD AND RESISTANCE FACTOR RATING (LRFD) SUMMARY FOR PRESTRESSED CONCRETE GIRDERS

LEVEL		VEHICLE	WEIGHT (W) (TONS)	CONTROLLING LOAD RATING	MINIMUM RATING FACTORS (RF)	TONS = W X RF	STRENGTH I LIMIT STATE											SERVICE III LIMIT STATE						COMMENT NUMBER
								MOMENT					SHEAR						MOMENT					
							LIVELOAD FACTORS	DISTRIBUTION FACTORS (DF)	RATING FACTOR	SPAN	GIRDER LOCATION	DISTANCE FROM LEFT END OF SPAN (ft)	DISTRIBUTION FACTORS (DF)	RATING FACTOR	SPAN	GIRDER LOCATION	DISTANCE FROM LEFT END OF SPAN (ft)	LIVELOAD FACTORS	DISTRIBUTION FACTORS (DF)	RATING FACTOR	SPAN	GIRDER LOCATION	DISTANCE FROM LEFT END OF SPAN (ft)	
DESIGN LOAD RATING		HL-93(Inv)	N/A	(1)	1.394	--	1.75	0.276	1.57	50'	EL	24.5	0.531	**1.39**	50'	EL	**2.45**	0.80	0.276	1.44	50'	EL	24.5	
		HL-93(Opr)	N/A	--	1.807	--	1.35	0.276	2.03	50'	EL	24.5	0.531	1.81	50'	EL	2.45	N/A	--	--	--	--	--	
		HS-20(Inv)	36.000	(2)	1.667	60.007	1.75	0.276	1.95	50'	EL	24.5	0.531	**1.67**	50'	EL	**2.45**	0.80	0.276	1.79	50'	EL	24.5	
		HS-20(Opr)	36.000	--	2.161	77.787	1.35	0.276	2.52	50'	EL	24.5	0.531	2.16	50'	EL	2.45	N/A	--	--	--	--	--	
LEGAL LOAD RATING	SV	SNSH	13.500	--	3.635	49.079	1.4	0.276	4.95	50'	EL	24.5	0.531	4.70	50'	EL	2.45	0.80	0.276	3.64	50'	EL	24.5	
		SNGARBS2	20.000	--	2.871	57.42	1.4	0.276	3.91	50'	EL	24.5	0.531	3.42	50'	EL	2.45	0.80	0.276	2.87	50'	EL	24.5	
		SNAGRIS2	22.000	--	2.778	61.109	1.4	0.276	3.78	50'	EL	19.6	0.531	3.21	50'	EL	2.45	0.80	0.276	2.78	50'	EL	24.5	
		SNCOTTS3	27.250	--	1.814	49.418	1.4	0.276	2.47	50'	EL	24.5	0.531	2.36	50'	EL	2.45	0.80	0.276	1.81	50'	EL	24.5	
		SNAGGRS4	34.925	--	1.577	55.063	1.4	0.276	2.15	50'	EL	24.5	0.531	2.01	50'	EL	2.45	0.80	0.276	1.58	50'	EL	24.5	
		SNS5A	35.550	--	1.537	54.657	1.4	0.276	2.09	50'	EL	24.5	0.531	2.07	50'	EL	2.45	0.80	0.276	1.54	50'	EL	24.5	
		SNS6A	39.950	--	1.438	57.43	1.4	0.276	1.96	50'	EL	24.5	0.531	1.91	50'	EL	2.45	0.80	0.276	1.44	50'	EL	24.5	
		SNS7B	42.000	--	1.370	57.54	1.4	0.276	1.87	50'	EL	24.5	0.531	1.91	50'	EL	2.45	0.80	0.276	1.37	50'	EL	24.5	
	TTST	TNAGRIT3	33.000	--	1.761	58.118	1.4	0.276	2.40	50'	EL	24.5	0.531	2.25	50'	EL	2.45	0.80	0.276	1.76	50'	EL	24.5	
		TNT4A	33.075	--	1.777	58.759	1.4	0.276	2.42	50'	EL	24.5	0.531	2.17	50'	EL	2.45	0.80	0.276	1.78	50'	EL	24.5	
		TNT6A	41.600	--	1.480	61.558	1.4	0.276	2.01	50'	EL	24.5	0.531	2.08	50'	EL	2.45	0.80	0.276	1.48	50'	EL	24.5	
		TNT7A	42.000	--	1.502	63.087	1.4	0.276	2.05	50'	EL	24.5	0.531	1.94	50'	EL	2.45	0.80	0.276	1.50	50'	EL	24.5	
		TNT7B	42.000	--	1.566	65.773	1.4	0.276	2.13	50'	EL	24.5	0.531	1.84	50'	EL	2.45	0.80	0.276	1.57	50'	EL	24.5	
		TNAGRIT4	43.000	--	1.486	63.902	1.4	0.276	2.02	50'	EL	24.5	0.531	1.77	50'	EL	2.45	0.80	0.276	1.49	50'	EL	24.5	
		TNAGT5A	45.000	--	1.388	62.47	1.4	0.276	1.89	50'	EL	24.5	0.531	1.80	50'	EL	2.45	0.80	0.276	1.39	50'	EL	24.5	
		TNAGT5B	45.000	(3)	1.360	61.206	1.4	0.276	1.85	50'	EL	24.5	0.531	1.68	50'	EL	2.45	0.80	0.276	**1.36**	50'	EL	**24.5**	

LOAD FACTORS:

DESIGN LOAD RATING FACTORS	LIMIT STATE	γ_{DC}	γ_{DW}
	STRENGTH I	1.25	1.50
	SERVICE III	1.00	1.00

NOTES:

MINIMUM RATING FACTORS ARE BASED ON THE STRENGTH I AND SERVICE III LIMIT STATES.

ALLOWABLE STRESSES FOR SERVICE III LIMIT STATE ARE AS REQUIRED FOR DESIGN.

COMMENTS:

1.
2.
3.
4.

(#) CONTROLLING LOAD RATING

(1) DESIGN LOAD RATING (HL-93)
(2) DESIGN LOAD RATING (HS-20)
(3) LEGAL LOAD RATING **
** SEE CHART FOR VEHICLE TYPE

GIRDER LOCATION

I - INTERIOR GIRDER
EL - EXTERIOR LEFT GIRDER
ER - EXTERIOR RIGHT GIRDER

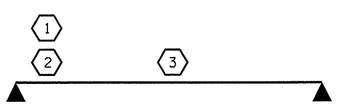

LRFR SUMMARY
FOR SPAN B

PROJECT NO. 17BP.1.R.23
BERTIE COUNTY
STATION: 12+47.50 -L-

STATE OF NORTH CAROLINA
DEPARTMENT OF TRANSPORTATION
RALEIGH

STANDARD
LRFR SUMMARY FOR
50' CORED SLAB UNIT
90° SKEW
(NON-INTERSTATE TRAFFIC)

NORTH CAROLINA PROFESSIONAL SEAL 14045 ENGINEER TIMOTHY A. COGGINS
08/16/12

REVISIONS						SHEET NO.
NO.	BY:	DATE:	NO.	BY:	DATE:	S-5
1			3			TOTAL SHEETS
2			4			20

ASSEMBLED BY : C. J. BUTLER DATE : 08/07/12
CHECKED BY : K.P.SEDAI DATE : 08/10/12
DRAWN BY : CVC 6/10
CHECKED BY : DNS 6/10

16-AUG-2012 09:39
S:\DPG1\Tim\17BP.1.R.23\cjbutler\17BP.1.R.23_SD_CS.dgn
tcoggins

STD. NO. 21LRFR1_90S_50L

LOAD AND RESISTANCE FACTOR RATING (LRFD) SUMMARY FOR PRESTRESSED CONCRETE GIRDERS

LEVEL		VEHICLE	WEIGHT (W) (TONS)	CONTROLLING LOAD RATING	MINIMUM RATING FACTORS (RF)	TONS = W X RF	STRENGTH I LIMIT STATE											SERVICE III LIMIT STATE						COMMENT NUMBER
								MOMENT					SHEAR						MOMENT					
							LIVELOAD FACTORS	DISTRIBUTION FACTORS (DF)	RATING FACTOR	SPAN	GIRDER LOCATION	DISTANCE FROM LEFT END OF SPAN (ft)	DISTRIBUTION FACTORS (DF)	RATING FACTOR	SPAN	GIRDER LOCATION	DISTANCE FROM LEFT END OF SPAN (ft)	LIVELOAD FACTORS	DISTRIBUTION FACTORS (DF)	RATING FACTOR	SPAN	GIRDER LOCATION	DISTANCE FROM LEFT END OF SPAN (ft)	
DESIGN LOAD RATING		HL-93(Inv)	N/A	1	1.032	--	1.75	0.28	1.36	35'	EL	17	0.561	**1.03**	35'	EL	**1.7**	0.80	0.28	1.05	35'	EL	17	
		HL-93(Opr)	N/A	--	1.338	--	1.35	0.28	1.77	35'	EL	17	0.561	1.34	35'	EL	1.7	N/A	--	--	--	--	--	
		HS-20(Inv)	36.000	2	1.189	42.810	1.75	0.28	1.79	35'	EL	13.6	0.561	**1.19**	35'	EL	**1.7**	0.80	0.28	1.39	35'	EL	17	
		HS-20(Opr)	36.000	--	1.542	55.494	1.35	0.28	2.32	35'	EL	13.6	0.561	1.54	35'	EL	1.7	N/A	--	--	--	--	--	
LEGAL LOAD RATING	SV	SNSH	13.500	--	2.400	32.402	1.4	0.28	3.89	35'	EL	17	0.561	3.06	35'	EL	1.7	0.80	0.28	2.40	35'	EL	17	
		SNGARBS2	20.000	--	2.052	41.044	1.4	0.28	3.29	35'	EL	13.6	0.561	2.32	35'	EL	1.7	0.80	0.28	2.05	35'	EL	13.6	
		SNAGRIS2	22.000	--	2.053	45.174	1.4	0.28	3.26	35'	EL	13.6	0.561	2.21	35'	EL	1.7	0.80	0.28	2.05	35'	EL	13.6	
		SNCOTTS3	27.250	--	1.202	32.744	1.4	0.28	1.95	35'	EL	17	0.561	1.54	35'	EL	1.7	0.80	0.28	1.20	35'	EL	17	
		SNAGGRS4	34.925	--	1.111	38.816	1.4	0.28	1.80	35'	EL	17	0.561	1.38	35'	EL	1.7	0.80	0.28	1.11	35'	EL	17	
		SNS5A	35.550	--	1.079	38.354	1.4	0.28	1.75	35'	EL	17	0.561	1.46	35'	EL	1.7	0.80	0.28	1.08	35'	EL	17	
		SNS6A	39.950	--	1.041	41.601	1.4	0.28	1.69	35'	EL	17	0.561	1.37	35'	EL	1.7	0.80	0.28	1.04	35'	EL	17	
		SNS7B	42.000	3	1.000	41.734	1.4	0.28	1.61	35'	EL	17	0.561	1.40	35'	EL	1.7	0.80	0.28	**1.00**	35'	EL	**17**	
	TTST	TNAGRIT3	33.000	--	1.286	42.439	1.4	0.28	2.08	35'	EL	17	0.561	1.60	35'	EL	1.7	0.80	0.28	1.29	35'	EL	17	
		TNT4A	33.075	--	1.285	42.512	1.4	0.28	2.08	35'	EL	17	0.561	1.51	35'	EL	1.7	0.80	0.28	1.29	35'	EL	17	
		TNT6A	41.600	--	1.126	46.84	1.4	0.28	1.82	35'	EL	17	0.561	1.48	35'	EL	1.7	0.80	0.28	1.13	35'	EL	17	
		TNT7A	42.000	--	1.163	48.833	1.4	0.28	1.89	35'	EL	17	0.561	1.37	35'	EL	1.7	0.80	0.28	1.16	35'	EL	17	
		TNT7B	42.000	--	1.144	48.061	1.4	0.28	1.85	35'	EL	17	0.561	1.33	35'	EL	1.7	0.80	0.28	1.14	35'	EL	17	
		TNAGRIT4	43.000	--	1.158	49.810	1.4	0.28	1.86	35'	EL	13.6	0.561	1.28	35'	EL	1.7	0.80	0.28	1.16	35'	EL	17	
		TNAGT5A	45.000	--	1.068	48.071	1.4	0.28	1.73	35'	EL	17	0.561	1.35	35'	EL	1.7	0.80	0.28	1.07	35'	EL	17	
		TNAGT5B	45.000	--	1.031	46.373	1.4	0.28	1.67	35'	EL	17	0.561	1.21	35'	EL	1.7	0.80	0.28	1.03	35'	EL	17	

LOAD FACTORS:

DESIGN LOAD RATING FACTORS	LIMIT STATE	γ_{DC}	γ_{DW}
	STRENGTH I	1.25	1.50
	SERVICE III	1.00	1.00

NOTES:

MINIMUM RATING FACTORS ARE BASED ON THE STRENGTH I AND SERVICE III LIMIT STATES.

ALLOWABLE STRESSES FOR SERVICE III LIMIT STATE ARE AS REQUIRED FOR DESIGN.

COMMENTS:

1.
2.
3.
4.

CONTROLLING LOAD RATING

1 DESIGN LOAD RATING (HL-93)
2 DESIGN LOAD RATING (HS-20)
3 LEGAL LOAD RATING **
** SEE CHART FOR VEHICLE TYPE

GIRDER LOCATION

I - INTERIOR GIRDER
EL - EXTERIOR LEFT GIRDER
ER - EXTERIOR RIGHT GIRDER

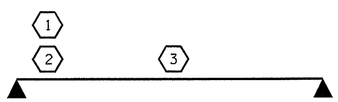

LRFR SUMMARY
FOR SPAN C

PROJECT NO. 17BP.1.R.23
BERTIE COUNTY
STATION: 12+47.50 -L-

STATE OF NORTH CAROLINA
DEPARTMENT OF TRANSPORTATION
RALEIGH

STANDARD
LRFR SUMMARY FOR
35' CORED SLAB UNIT
90° SKEW
(NON-INTERSTATE TRAFFIC)

NORTH CAROLINA PROFESSIONAL SEAL 14045 ENGINEER TIMOTHY A. COGGINS
08/16/12

REVISIONS						SHEET NO.
NO.	BY:	DATE:	NO.	BY:	DATE:	S-6
1			3			TOTAL SHEETS
2			4			20

ASSEMBLED BY : C. J. BUTLER DATE : 08/07/12
CHECKED BY : K.P.SEDAI DATE : 08/10/12
DRAWN BY : CVC 6/10
CHECKED BY : DNS 6/10

16-AUG-2012 09:38
S:\DPGI\Tim\17BP.1.R.23\cjbutler\17BP.1.R.23_SD_CS.dgn
tcoggins

STD. NO. 21LRFR1_90S_35L

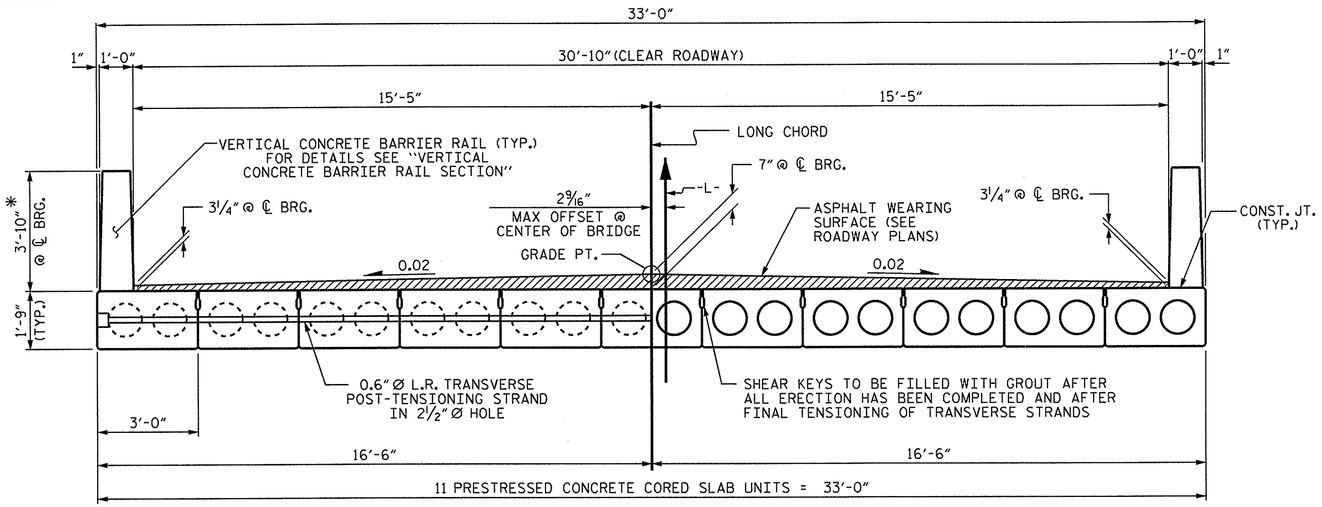

HALF SECTION
AT INTERMEDIATE DIAPHRAGMS

HALF SECTION
THROUGH VOIDS

TYPICAL SECTION

* - THE MAXIMUM BARRIER RAIL HEIGHT AND ASPHALT THICKNESS IS SHOWN. THE HEIGHT OF THE BARRIER RAIL AND ASPHALT THICKNESS VARIES WHILE THE TOP OF THE BARRIER RAIL FOLLOWS THE PROFILE OF THE GUTTERLINE. FOR RAIL HEIGHT DETAILS AND ASPHALT THICKNESS SEE THE "VERTICAL CONCRETE BARRIER RAIL SECTION" DETAIL.

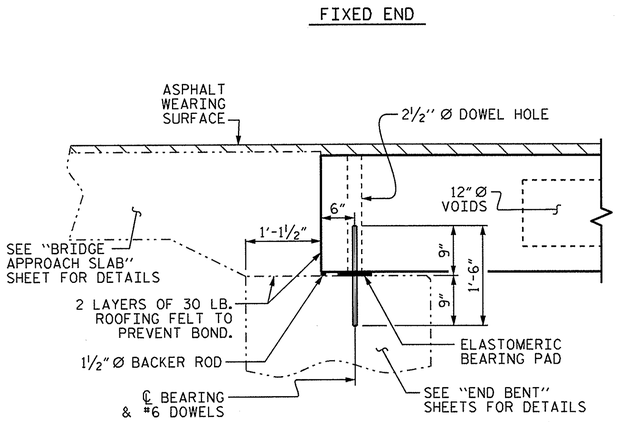

SECTION AT END BENT

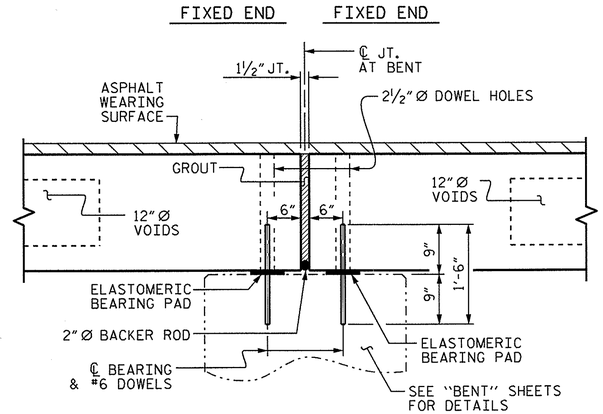

SECTION AT BENT

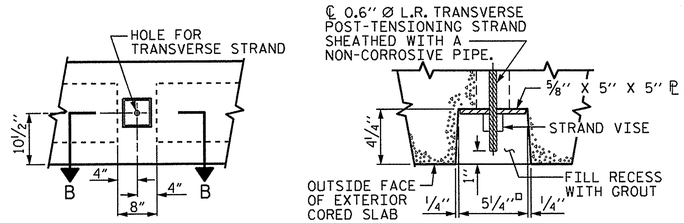

ELEVATION VIEW

SECTION B-B

GROUTED RECESS AT END OF POST-TENSIONED STRAND OF CORED SLABS

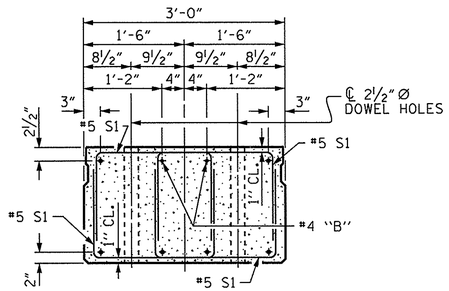

END ELEVATION

SHOWING PLACEMENT OF DOUBLE STIRRUPS AND LOCATION OF DOWEL HOLES. (STRAND LAYOUT NOT SHOWN.) INTERIOR SLAB UNIT SHOWN-EXTERIOR SLAB UNIT SIMILAR EXCEPT SHEAR KEY LOCATION.

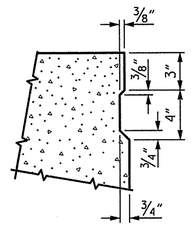

SHEAR KEY DETAIL

NOTE: OMIT SHEAR KEY ON OUTSIDE FACE OF EXTERIOR CORED SLABS.

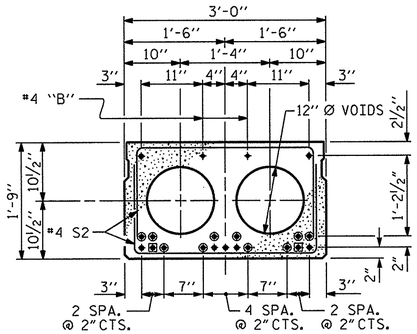

INTERIOR SLAB SECTION (35' UNIT)

(9 STRANDS REQUIRED)

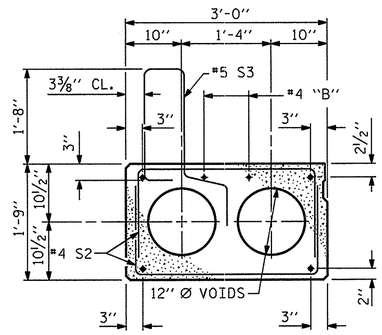

EXT. SLAB SECTION

(FOR PRESTRESSED STRAND LAYOUT, SEE INTERIOR SLAB SECTION.)

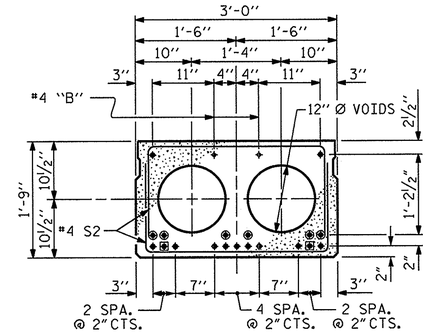

INTERIOR SLAB SECTION (40' UNIT)

(13 STRANDS REQUIRED)

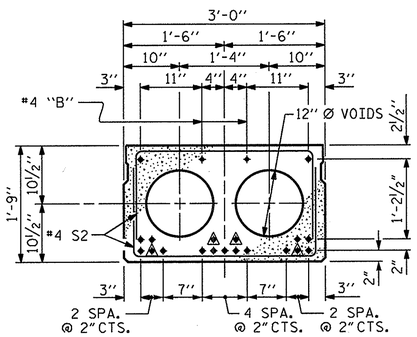

INTERIOR SLAB SECTION (50' UNIT)

(19 STRANDS REQUIRED)

0.6" Ø LOW RELAXATION STRAND LAYOUT

▲ BOND SHALL BE BROKEN ON THESE STRANDS FOR A DISTANCE OF 6'-0" FROM END OF CORED SLAB UNIT. SEE STANDARD SPECIFICATIONS, ARTICLE 1078-7.

■ BOND SHALL BE BROKEN ON THESE STRANDS FOR A DISTANCE OF 2'-0" FROM END OF CORED SLAB UNIT. SEE STANDARD SPECIFICATIONS, ARTICLE 1078-7.

◉ OPTIONAL FULL LENGTH DEBONDED STRANDS. THESE STRANDS ARE NOT REQUIRED. IF THE FABRICATOR CHOOSES TO INCLUDE THESE STRANDS IN THE CORED SLAB UNIT, THE STRANDS SHALL BE DEBONDED FOR THE FULL LENGTH OF THE UNIT AT NO ADDITIONAL COST. SEE STANDARD SPECIFICATIONS, ARTICLE 1078-7.

DEBONDING LEGEND

PROJECT NO. 17BP.1.R.23
BERTIE COUNTY
STATION: 12+47.50 -L-

SHEET 1 OF 5

STATE OF NORTH CAROLINA
DEPARTMENT OF TRANSPORTATION
RALEIGH

STANDARD
3'-0" X 1'-9"
PRESTRESSED CONCRETE
CORED SLAB UNIT
90° SKEW

NORTH CAROLINA PROFESSIONAL SEAL 14045 ENGINEER TIMOTHY L. COGGINS
08/10/12

REVISIONS						SHEET NO.
NO.	BY:	DATE:	NO.	BY:	DATE:	S-7
1			3			TOTAL SHEETS
2			4			20

ASSEMBLED BY : C. J. BUTLER	DATE : 08/07/12	
CHECKED BY : K.P.SEDAI	DATE : 08/10/12	
DRAWN BY : DGE 5/09	REV. 12/11	MAA/AAC
CHECKED BY : BCH 6/09		

16-AUG-2012 09:38
S:\DPGI\Tim\17BP.1.R.23\cjbutler\17BP.1.R.23_SD_CS.dgn
tcoggins

STD. NO. 21" PCS2_33_90S

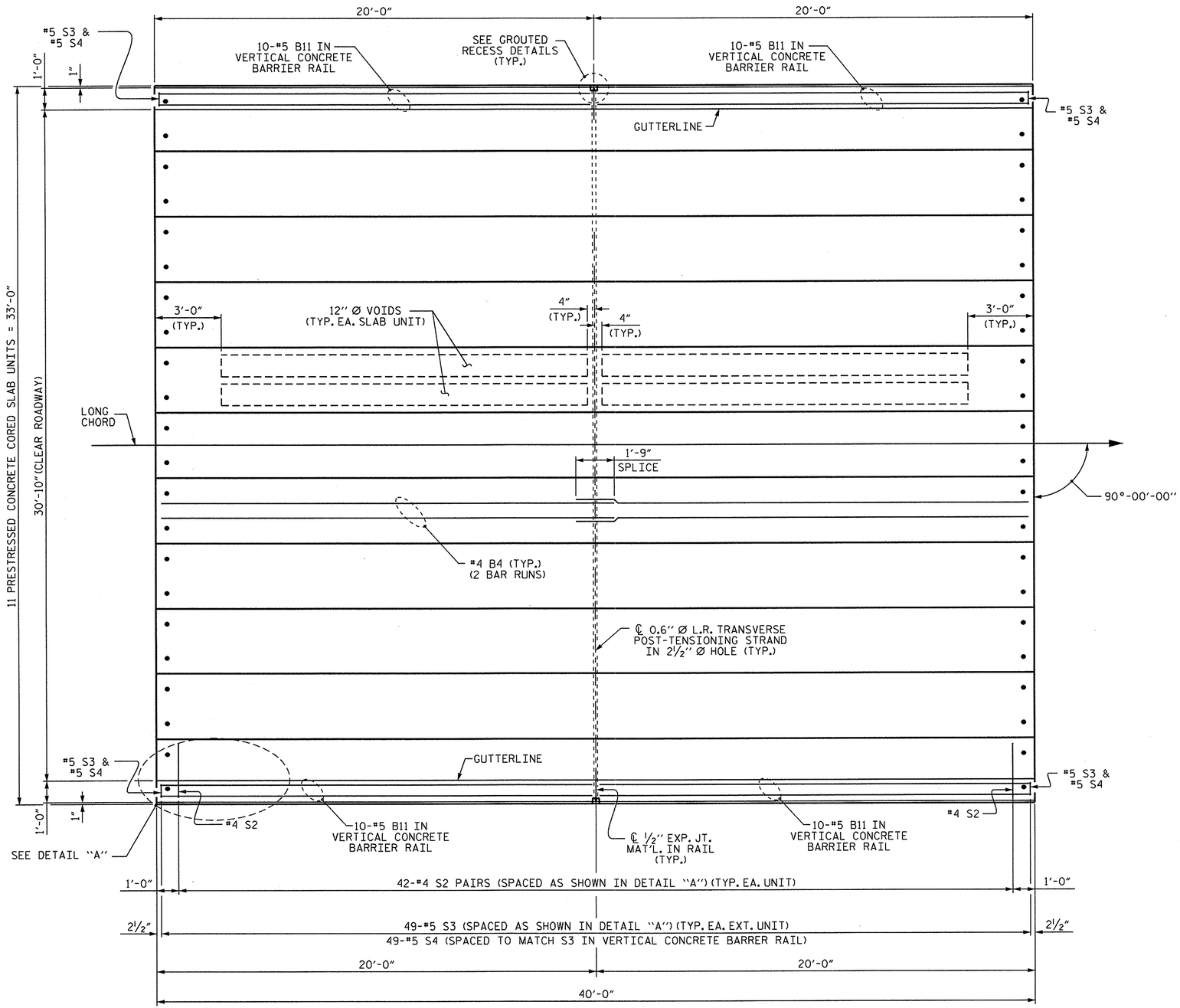

PLAN OF UNIT

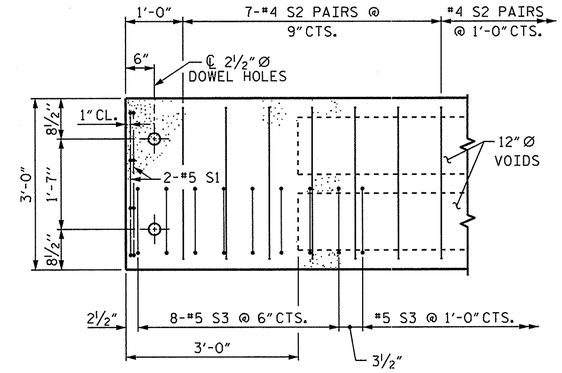

DETAIL "A"

NOTE: EXTERIOR UNIT SHOWN - INTERIOR UNIT SIMILAR EXCEPT OMIT #5 S3 BARS.

PROJECT NO. 17BP.1.R.23

BERTIE COUNTY

STATION: 12+47.50 -L-

SHEET 2 OF 5

STATE OF NORTH CAROLINA
DEPARTMENT OF TRANSPORTATION
RALEIGH

PLAN OF 40' UNIT 30'-10" CLEAR ROADWAY 90° SKEW

NORTH CAROLINA PROFESSIONAL SEAL 14045 ENGINEER TIMOTHY R. COGGINS
08/10/12

REVISIONS						SHEET NO.
NO.	BY:	DATE:	NO.	BY:	DATE:	S-8
1			3			TOTAL SHEETS
2			4			20

ASSEMBLED BY : C. J. BUTLER DATE : 08/07/12
CHECKED BY : K.P.SEDAI DATE : 08/10/12

DRAWN BY : DGE 3/09
CHECKED BY : BCH 3/09

REV. 12/5/11 MAA/AAC

16-AUG-2012 09:37
S:\DPG1\Tim\17BP.1.R.23\cjbutler\17BP.1.R.23_SD_CS.dgn
tcoggins

STD. NO. 21" PCS_33_90S_40L

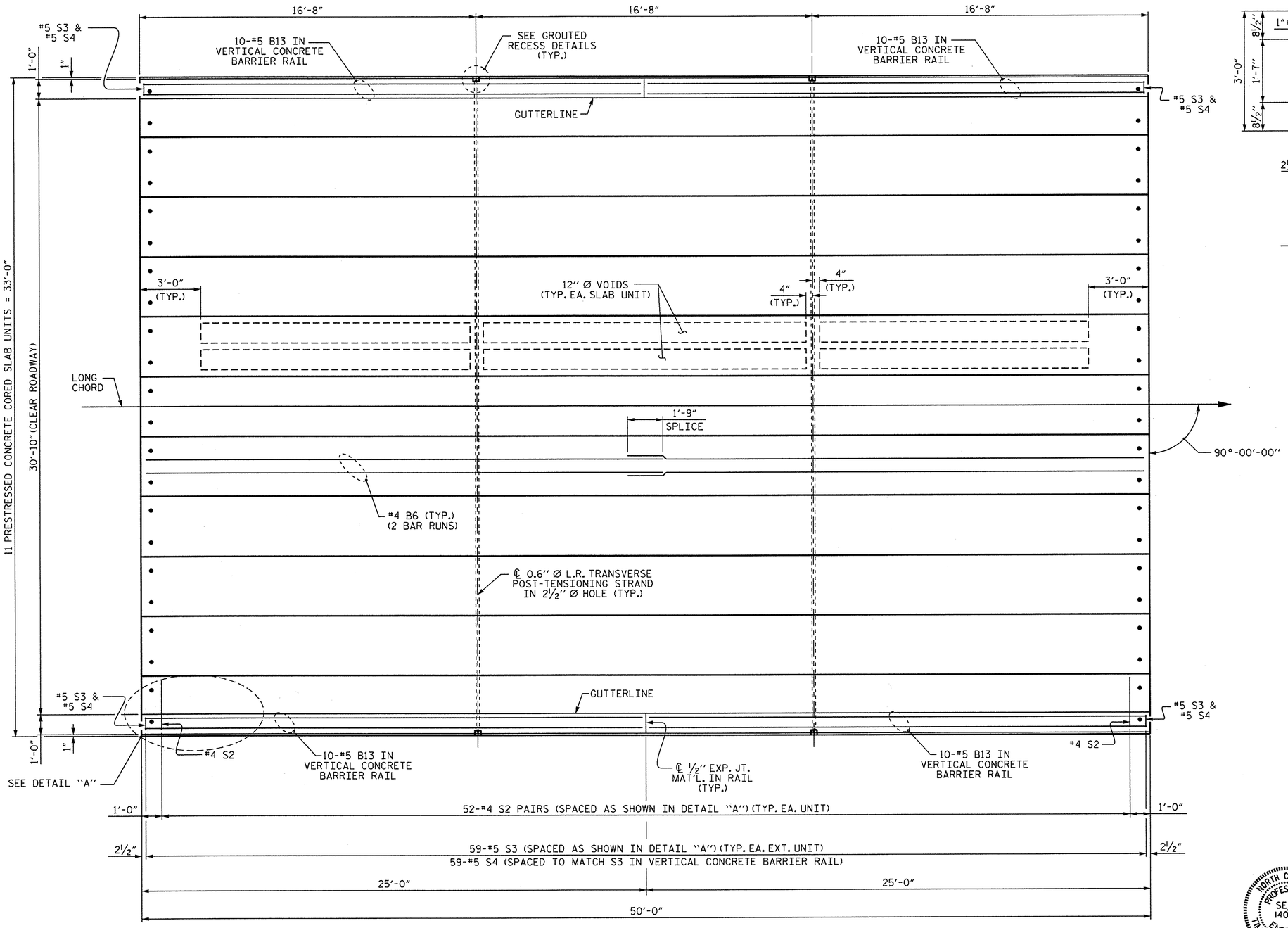

PLAN OF UNIT

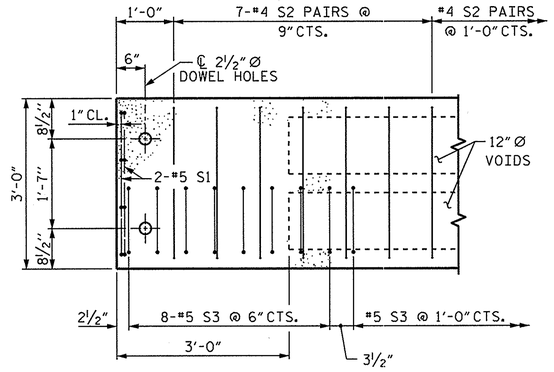

DETAIL "A"

NOTE: EXTERIOR UNIT SHOWN - INTERIOR UNIT SIMILAR EXCEPT OMIT #5 S3 BARS.

PROJECT NO. 17BP.1.R.23

BERTIE COUNTY

STATION: 12+47.50 -L-

SHEET 3 OF 5

STATE OF NORTH CAROLINA
DEPARTMENT OF TRANSPORTATION
RALEIGH

PLAN OF 50' UNIT 30'-10" CLEAR ROADWAY 90° SKEW

NORTH CAROLINA PROFESSIONAL SEAL 14045 ENGINEER TIMOTHY K. COGGINS
08/16/12

REVISIONS						SHEET NO.
NO.	BY:	DATE:	NO.	BY:	DATE:	S-9
1			3			TOTAL SHEETS
2			4			20

ASSEMBLED BY : C. J. BUTLER		DATE : 08/07/12	
CHECKED BY : K.P.SEDAI		DATE : 08/10/12	
DRAWN BY : DGE 3/09	REV. 12/5/11 MAA/AAC		
CHECKED BY : BCH 3/09			

16-AUG-2012 09:36
S:\DPG\Tim\17BP.1.R.23\cjbutler\17BP.1.R.23_SD_CS.dgn
tcoggins

STD. NO. 21" PCS_33_90S_50L

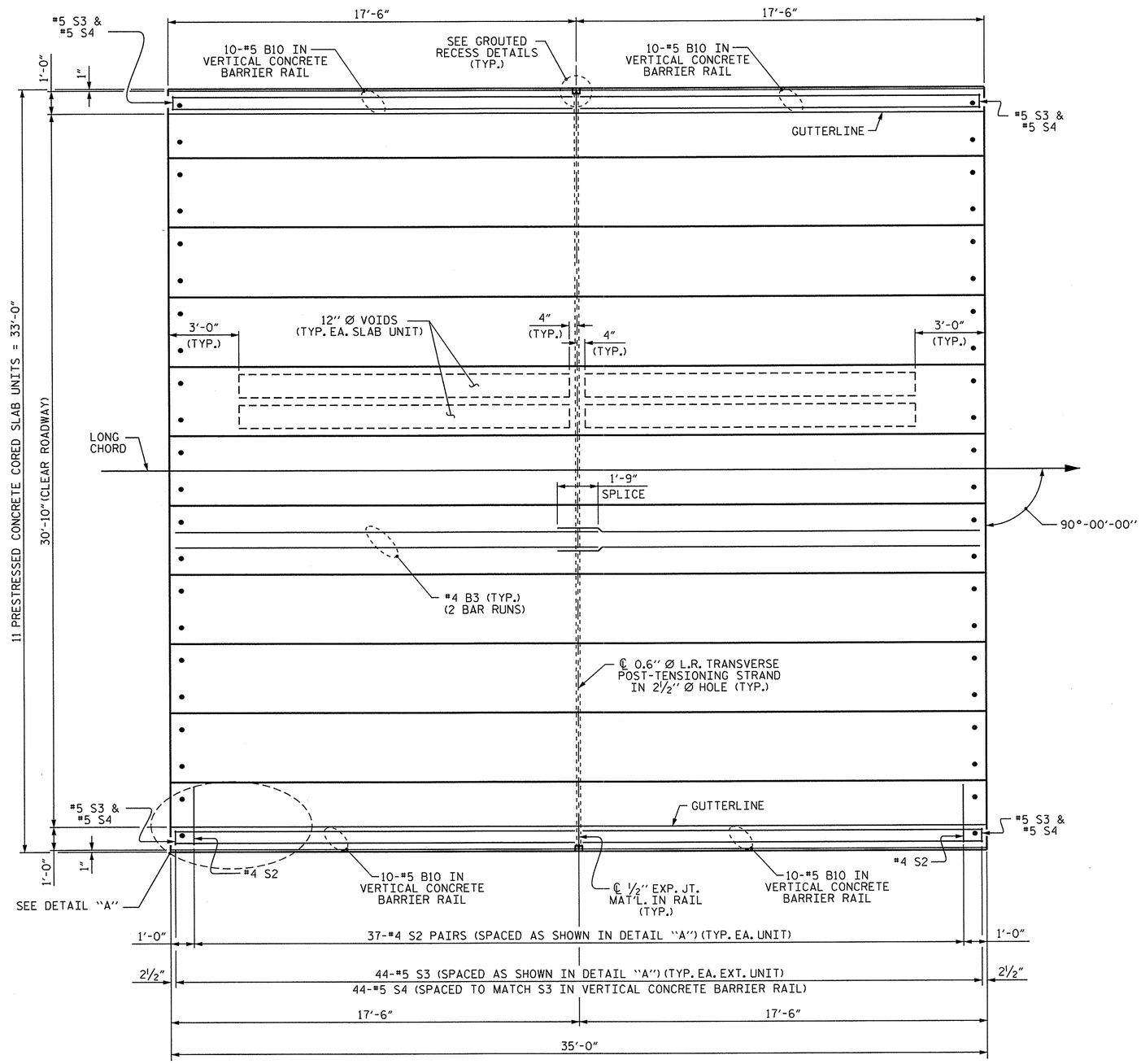

PLAN OF UNIT

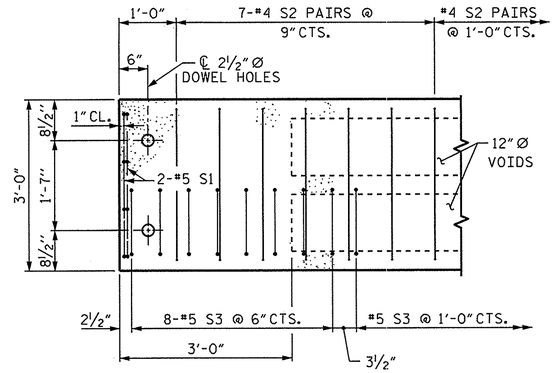

DETAIL "A"

NOTE: EXTERIOR UNIT SHOWN - INTERIOR UNIT SIMILAR EXCEPT OMIT #5 S3 BARS.

PROJECT NO. 17BP.1.R.23

BERTIE COUNTY

STATION: 12+47.50 -L-

SHEET 4 OF 5

STATE OF NORTH CAROLINA
DEPARTMENT OF TRANSPORTATION
RALEIGH

PLAN OF 35' UNIT 30'-10" CLEAR ROADWAY 90° SKEW

NORTH CAROLINA PROFESSIONAL SEAL 14045 ENGINEER TIMOTHY W. COGGINS
08/16/12

REVISIONS						SHEET NO.
NO.	BY:	DATE:	NO.	BY:	DATE:	S-10
1			3			TOTAL SHEETS
2			4			20

ASSEMBLED BY : C. J. BUTLER		DATE : 08/07/12	
CHECKED BY : K.P.SEDAI		DATE : 08/10/12	
DRAWN BY : DGE 3/09	REV. 12/5/11 MAA/AAC		
CHECKED BY : BCH 3/09			

16-AUG-2012 09:36
S:\DPG1\Tim\17BP.1.R.23\cjbutler\17BP.1.R.23_SD_CS.dgn
tcoggins

STD. NO. 21" PCS_33_90S_35L

BILL OF MATERIAL FOR VERTICAL CONCRETE BARRIER RAIL

BAR	BARS PER PAIR OF EXTERIOR UNITS	TOTAL NO.	SIZE	TYPE	LENGTH	WEIGHT
	40' UNIT					
* B11	40	40	#5	STR	19'-7"	817
* S4	98	98	#5	2	7'-2"	733
* EPOXY COATED REINFORCING STEEL				LBS.		1550
CLASS AA CONCRETE				CU.YDS.		10.5
TOTAL VERTICAL CONCRETE BARRIER RAIL				LN. FT.		80.13

BILL OF MATERIAL FOR VERTICAL CONCRETE BARRIER RAIL

BAR	BARS PER PAIR OF EXTERIOR UNITS	TOTAL NO.	SIZE	TYPE	LENGTH	WEIGHT
	50' UNIT					
* B13	40	40	#5	STR	24'-7"	1026
* S4	118	118	#5	2	7'-2"	882
* EPOXY COATED REINFORCING STEEL				LBS.		1908
CLASS AA CONCRETE				CU.YDS.		13.1
TOTAL VERTICAL CONCRETE BARRIER RAIL				LN. FT.		100.25

BILL OF MATERIAL FOR VERTICAL CONCRETE BARRIER RAIL

BAR	BARS PER PAIR OF EXTERIOR UNITS	TOTAL NO.	SIZE	TYPE	LENGTH	WEIGHT
	35' UNIT					
* B10	40	40	#5	STR	17'-1"	713
* S4	88	88	#5	2	7'-2"	658
* EPOXY COATED REINFORCING STEEL				LBS.		1371
CLASS AA CONCRETE				CU.YDS.		9.2
TOTAL VERTICAL CONCRETE BARRIER RAIL				LN. FT.		70.13

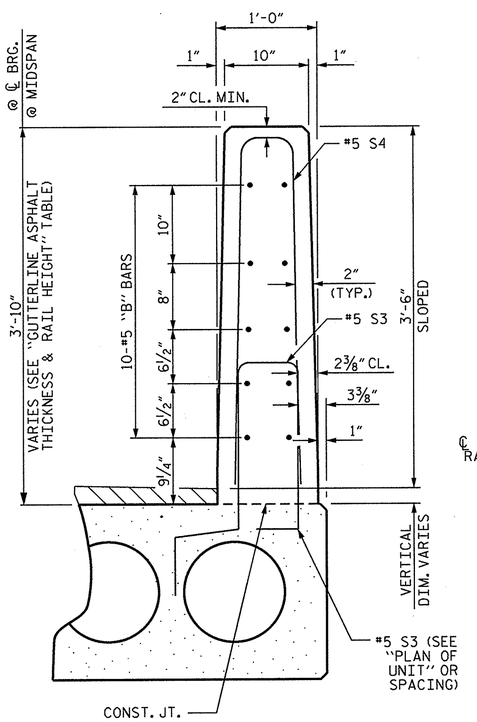

VERTICAL CONCRETE BARRIER RAIL SECTION

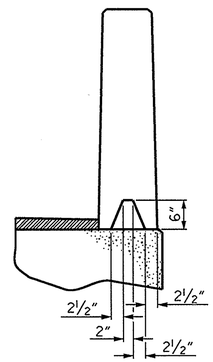

SECTION S-S

AT DAM IN OPEN JOINT (THIS IS TO BE USED ONLY WHEN SLIP FORM IS USED)

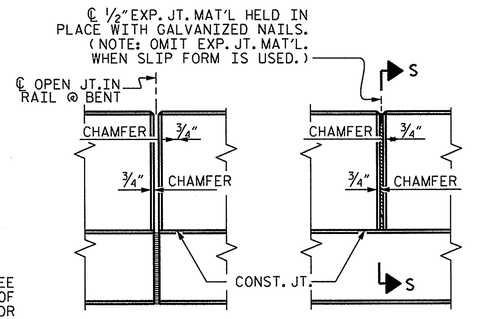

ELEVATION AT EXPANSION JOINTS

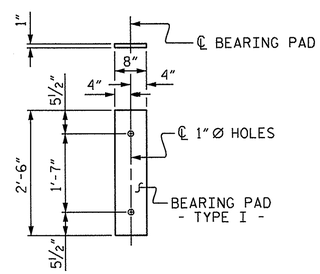

FIXED END

(TYPE I - 66 REQ'D)

ELASTOMERIC BEARING DETAILS

ELASTOMER IN ALL BEARINGS SHALL BE 50 DUROMETER HARDNESS.

BILL OF MATERIAL FOR ONE 40' CORED SLAB UNIT

				EXTERIOR UNIT		INTERIOR UNIT	
BAR	NUMBER	SIZE	TYPE	LENGTH	WEIGHT	LENGTH	WEIGHT
B4	4	#4	STR	20'-9"	55	20'-9"	55
S1	8	#5	3	4'-3"	35	4'-3"	35
S2	84	#4	3	5'-4"	299	5'-4"	299
* S3	49	#5	1	6'-2"	315		
REINFORCING STEEL			LBS.		389		389
* EPOXY COATED REINFORCING STEEL			LBS.		315		
6500 P.S.I. CONCRETE			CU. YDS.		5.8		5.8
0.6" Ø L.R. STRANDS			No.		13		13

BILL OF MATERIAL FOR ONE 50' CORED SLAB UNIT

				EXTERIOR UNIT		INTERIOR UNIT	
BAR	NUMBER	SIZE	TYPE	LENGTH	WEIGHT	LENGTH	WEIGHT
B6	4	#4	STR	25'-9"	69	25'-9"	69
S1	8	#5	3	4'-3"	35	4'-3"	35
S2	104	#4	3	5'-4"	371	5'-4"	371
* S3	59	#5	1	6'-2"	379		
REINFORCING STEEL			LBS.		475		475
* EPOXY COATED REINFORCING STEEL			LBS.		379		
6500 P.S.I. CONCRETE			CU. YDS.		7.1		7.1
0.6" Ø L.R. STRANDS			No.		19		19

BILL OF MATERIAL FOR ONE 35' CORED SLAB UNIT

				EXTERIOR UNIT		INTERIOR UNIT	
BAR	NUMBER	SIZE	TYPE	LENGTH	WEIGHT	LENGTH	WEIGHT
B3	4	#4	STR	18'-3"	49	18'-3"	49
S1	8	#5	3	4'-3"	35	4'-3"	35
S2	74	#4	3	5'-4"	264	5'-4"	264
* S3	44	#5	1	6'-2"	283		
REINFORCING STEEL			LBS.		348		348
* EPOXY COATED REINFORCING STEEL			LBS.		283		
5000 P.S.I. CONCRETE			CU. YDS.		5.1		5.1
0.6" Ø L.R. STRANDS			No.		9		9

BAR TYPES

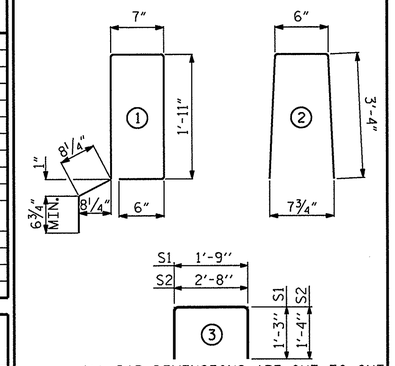

ALL BAR DIMENSIONS ARE OUT TO OUT

CORED SLABS REQUIRED

	NUMBER	LENGTH	TOTAL LENGTH
40' UNIT			
EXTERIOR C.S.	2	40'-0"	80'-0"
INTERIOR C.S.	9	40'-0"	360'-0"
TOTAL	11		440'-0"

CORED SLABS REQUIRED

	NUMBER	LENGTH	TOTAL LENGTH
50' UNIT			
EXTERIOR C.S.	2	50'-0"	100'-0"
INTERIOR C.S.	9	50'-0"	450'-0"
TOTAL	11		550'-0"

CORED SLABS REQUIRED

	NUMBER	LENGTH	TOTAL LENGTH
35' UNIT			
EXTERIOR C.S.	2	35'-0"	70'-0"
INTERIOR C.S.	9	35'-0"	315'-0"
TOTAL	11		385'-0"

NOTES

ALL PRESTRESSING STRANDS SHALL BE 7-WIRE LOW RELAXATION GRADE 270 STRANDS AND SHALL CONFORM TO AASHTO M203 EXCEPT FOR SAMPLING REQUIREMENTS WHICH SHALL BE IN ACCORDANCE WITH THE STANDARD SPECIFICATIONS.

ALL REINFORCING STEEL CAST WITH THE CORED SLAB SECTIONS SHALL BE GRADE 60 AND SHALL BE INCLUDED IN THE UNIT PRICE BID FOR PRESTRESSED CONCRETE CORED SLABS.

RECESSES FOR TRANSVERSE STRANDS SHALL BE GROUTED AFTER THE TENSIONING OF THE STRANDS.

THE 2½" Ø DOWEL HOLES AT FIXED ENDS OF SLAB SECTIONS SHALL BE FILLED WITH NON-SHRINK GROUT.

THE BACKER RODS SHALL CONFORM TO THE REQUIREMENTS OF TYPE M BOND BREAKER. SEE SECTION 1028 OF THE STANDARD SPECIFICATIONS.

WHEN CORED SLABS ARE CAST, AN INTERNAL HOLD-DOWN SYSTEM SHALL BE EMPLOYED TO PREVENT VOIDS FROM RISING OR MOVING SIDEWAYS. AT LEAST SIX WEEKS PRIOR TO CASTING CORED SLABS, THE CONTRACTOR SHALL SUBMIT TO THE ENGINEER FOR REVIEW AND COMMENT, DETAILED DRAWINGS OF THE PROPOSED HOLD-DOWN SYSTEM. IN ADDITION TO STRUCTURAL DETAILS, LOCATION AND SPACING OF THE HOLD-DOWNS SHALL BE INDICATED.

ALL REINFORCING STEEL IN THE VERTICAL CONCRETE BARRIER RAIL SHALL BE EPOXY COATED.

PRESTRESSING STRANDS SHALL BE CUT FLUSH WITH THE CORED SLAB UNIT ENDS.

APPLY EPOXY PROTECTIVE COATING TO CORED SLAB UNIT ENDS.

GROOVED CONTRACTION JOINTS, ½" IN DEPTH, SHALL BE TOOLED IN ALL EXPOSED FACES OF THE BARRIER RAIL AND IN ACCORDANCE WITH ARTICLE 825-10(B) OF THE STANDARD SPECIFICATIONS. A CONTRACTION JOINT SHALL BE LOCATED AT EACH THIRD POINT BETWEEN BARRIER RAIL EXPANSION JOINTS. ONLY ONE CONTRACTION JOINT IS REQUIRED AT MIDPOINT OF BARRIER RAIL SEGMENTS LESS THAN 20 FEET IN LENGTH AND NO CONTRACTION JOINTS ARE REQUIRED FOR THOSE SEGMENTS LESS THAN 10 FEET IN LENGTH.

TRANSVERSE POST TENSIONING OF THE CORED SLAB UNITS SHALL BE DONE IN ACCORDANCE WITH THE STANDARD SPECIFICATIONS.

THE TRANSFER OF LOAD FROM THE ANCHORAGES TO THE CORED SLAB UNIT SHALL BE DONE WHEN THE CONCRETE HAS REACHED A COMPRESSIVE STRENGTH OF NOT LESS THAN THE REQUIRED STRENGTH SHOWN IN THE "CONCRETE RELEASE STRENGTH" TABLE.

FOR GROUT FOR STRUCTURES, SEE SPECIAL PROVISIONS.

GUTTERLINE ASPHALT THICKNESS & RAIL HEIGHT

30'-10" CLEAR ROADWAY	ASPHALT OVERLAY THICKNESS	RAIL HEIGHT
	@ MID-SPAN	@ MID-SPAN
	NORMAL CROWN SECTION	
35' UNITS	2⅞"	3'-9⅝"
40' UNITS	2⅛"	3'-8⅞"
50' UNITS	1"	3'-7¾"

GRADE 270 STRANDS

	0.6" Ø L.R.
AREA (SQUARE INCHES)	0.217
ULTIMATE STRENGTH (LBS. PER STRAND)	58,600
APPLIED PRESTRESS (LBS. PER STRAND)	43,950

DEAD LOAD DEFLECTION AND CAMBER

	3'-0" x 1'-9"
40' CORED SLAB UNIT	0.6" Ø L.R. STRAND
CAMBER (SLAB ALONE IN PLACE)	1¼" ↑
DEFLECTION DUE TO SUPERIMPOSED DEAD LOAD**	⅛" ↓
FINAL CAMBER	1⅛" ↑

** INCLUDES FUTURE WEARING SURFACE

CONCRETE RELEASE STRENGTH

UNIT	PSI
35' UNIT	4000
40' UNIT	4000
50' UNIT	4900

DEAD LOAD DEFLECTION AND CAMBER

	3'-0" x 1'-9"
50' CORED SLAB UNIT	0.6" Ø L.R. STRAND
CAMBER (SLAB ALONE IN PLACE)	2½" ↑
DEFLECTION DUE TO SUPERIMPOSED DEAD LOAD**	¼" ↓
FINAL CAMBER	2¼" ↑

** INCLUDES FUTURE WEARING SURFACE

DEAD LOAD DEFLECTION AND CAMBER

	3'-0" x 1'-9"
35' CORED SLAB UNIT	0.6" Ø L.R. STRAND
CAMBER (SLAB ALONE IN PLACE)	½" ↑
DEFLECTION DUE TO SUPERIMPOSED DEAD LOAD**	⅛" ↓
FINAL CAMBER	⅜" ↑

** INCLUDES FUTURE WEARING SURFACE

PROJECT NO. 17BP.1.R.23

BERTIE COUNTY

STATION: 12+47.50 -L-

SHEET 5 OF 5

STATE OF NORTH CAROLINA
DEPARTMENT OF TRANSPORTATION
RALEIGH

STANDARD
3'-0" X 1'-9"
PRESTRESSED CONCRETE
CORED SLAB UNIT
90° SKEW

NORTH CAROLINA PROFESSIONAL SEAL 14045 ENGINEER TIMOTHY L. COGGINS
08/16/12

REVISIONS						SHEET NO.
NO.	BY:	DATE:	NO.	BY:	DATE:	S-11
1			3			TOTAL SHEETS
2			4			20

STD. NO. 21" PCS3_33_90S

ASSEMBLED BY : C. J. BUTLER	DATE :08/07/12
CHECKED BY : K.P.SEDAI	DATE :08/10/12
DRAWN BY : DGE 5/09	REV. 12/11 MAA/AAC
CHECKED BY : BCH 6/09	

16-AUG-2012 09:35
S:\DPGI\Tim\17BP.1.R.23\cjbutler\17BP.1.R.23_SD_CS.dgn
tcoggins

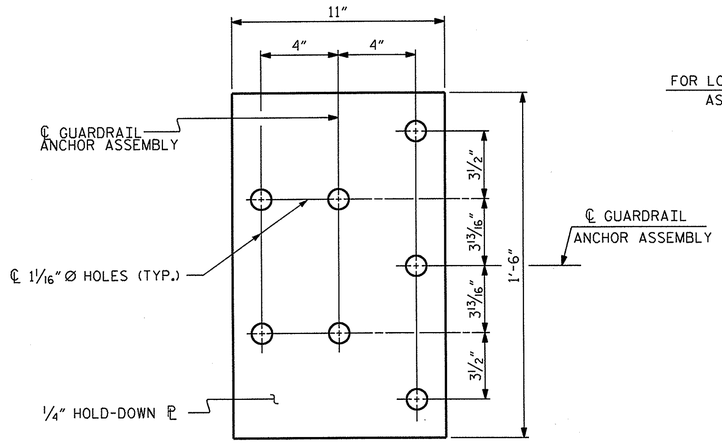

PLAN

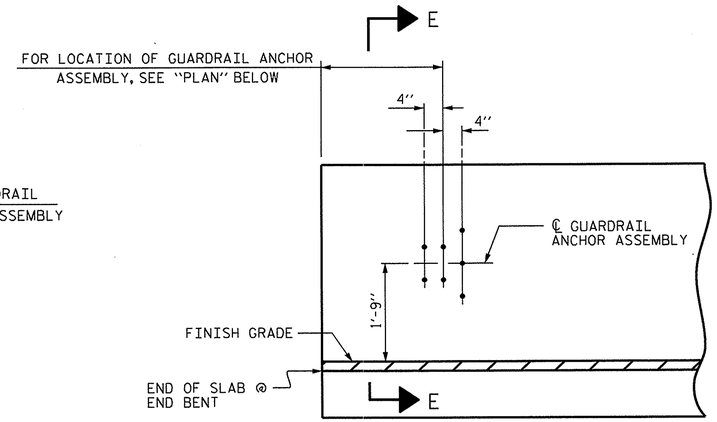

ELEVATION

NOTES

THE GUARDRAIL ANCHOR ASSEMBLY SHALL CONSIST OF A 1/4" HOLD DOWN PLATE AND 7 - 7/8" Ø BOLTS WITH NUTS AND WASHERS.

THE HOLD-DOWN PLATE SHALL CONFORM TO AASHTO M270 GRADE 36. AFTER FABRICATION, THE HOLD-DOWN PLATE SHALL BE HOT-DIP GALVANIZED IN ACCORDANCE WITH AASHTO M111.

BOLTS SHALL CONFORM TO THE REQUIREMENTS OF ASTM A307 AND NUTS SHALL CONFORM TO THE REQUIREMENTS OF AASHTO M291. BOLTS, NUTS AND WASHERS SHALL BE GALVANIZED. (AT THE CONTRACTOR'S OPTION, STAINLESS STEEL BOLTS, NUTS AND WASHERS MAY BE USED AS AN ALTERNATE FOR THE 7/8" Ø GALVANIZED BOLTS, NUTS AND WASHERS. THEY SHALL CONFORM TO OR EXCEED THE MECHANICAL REQUIREMENTS OF ASTM A307. THE USE OF THIS ALTERNATE SHALL BE APPROVED BY THE ENGINEER.)

THE GUARDRAIL ANCHOR ASSEMBLY IS REQUIRED AT ALL POINTS WHERE APPROACH GUARDRAIL IS TO BE ATTACHED TO THE END OF BARRIER RAIL. FOR POINTS OF ATTACHMENT, SEE SKETCH.

AFTER INSTALLATION, THE EXPOSED THREAD OF THE BOLT SHALL BE BURRED WITH A SHARP POINTED TOOL.

THE COST OF THE GUARDRAIL ANCHOR ASSEMBLY SHALL BE INCLUDED IN THE UNIT CONTRACT PRICE BID FOR VERTICAL CONCRETE BARRIER RAIL.

THE VERTICAL REINFORCING BARS MAY BE SHIFTED SLIGHTLY IN THE VERTICAL CONCRETE BARRIER RAIL TO CLEAR ASSEMBLY BOLTS.

THE 1 1/4" Ø HOLES SHALL BE FORMED OR DRILLED WITH A CORE BIT. IMPACT TOOLS WILL NOT BE PERMITTED. ANY CONCRETE DAMAGED BY THIS WORK SHALL BE REPAIRED TO THE SATISFACTION OF THE ENGINEER.

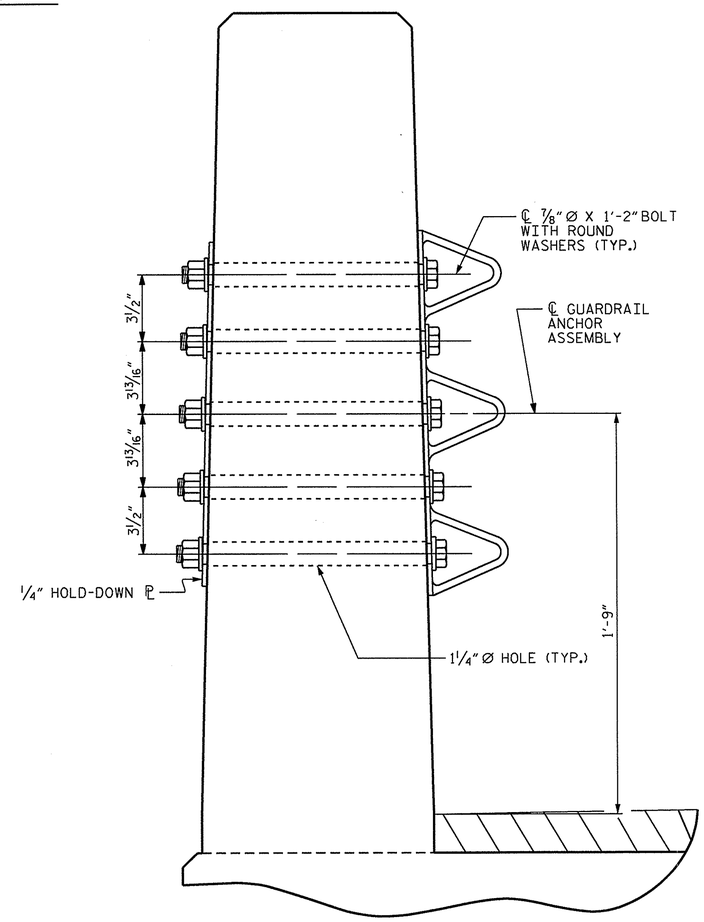

SECTION E-E

GUARDRAIL ANCHOR ASSEMBLY DETAILS

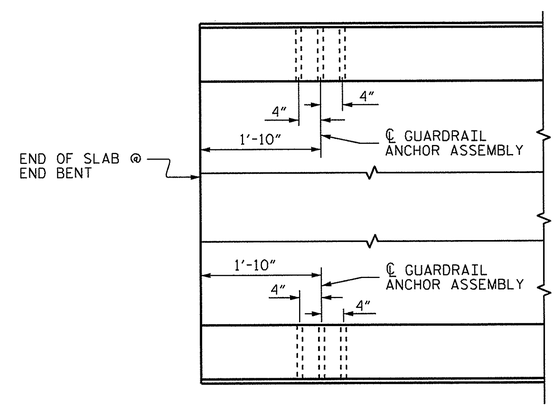

PLAN

LOCATION OF ANCHORS FOR GUARDRAIL

END BENT #1 SHOWN, END BENT #2 SIMILAR.

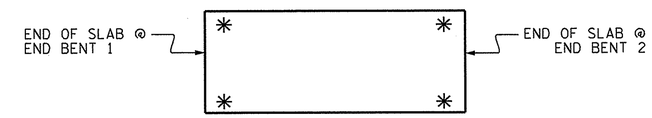

SKETCH SHOWING POINTS OF ATTACHMENT

✳ DENOTES GUARDRAIL ANCHOR ASSEMBLY

PROJECT NO. 17BP.1.R.23

BERTIE COUNTY

STATION: 12+47.50 -L-

STATE OF NORTH CAROLINA
DEPARTMENT OF TRANSPORTATION
RALEIGH

STANDARD
GUARDRAIL ANCHORAGE FOR VERTICAL CONCRETE BARRIER RAIL

NORTH CAROLINA PROFESSIONAL SEAL 14045 ENGINEER TIMOTHY L. COGGINS
08/16/12

REVISIONS						SHEET NO.
NO.	BY:	DATE:	NO.	BY:	DATE:	S-12
1			3			TOTAL SHEETS
2			4			20

ASSEMBLED BY : C. J. BUTLER	DATE : 08/07/12
CHECKED BY : K.P.SEDAI	DATE : 08/07/12
DRAWN BY : MAA 5/10	ADDED 5/6/10
CHECKED BY : GM 5/10	REV. 10/1/11 MAA/GM
	REV. 12/5/11 MAA/GM

16-AUG-2012 10:00
S:\OPGI\Tim\17BP.1.R.23\cjbutler\17BP.1.R.23_SD_CS.dgn
tcoggins

(SHT 1) STD. NO. GRA3

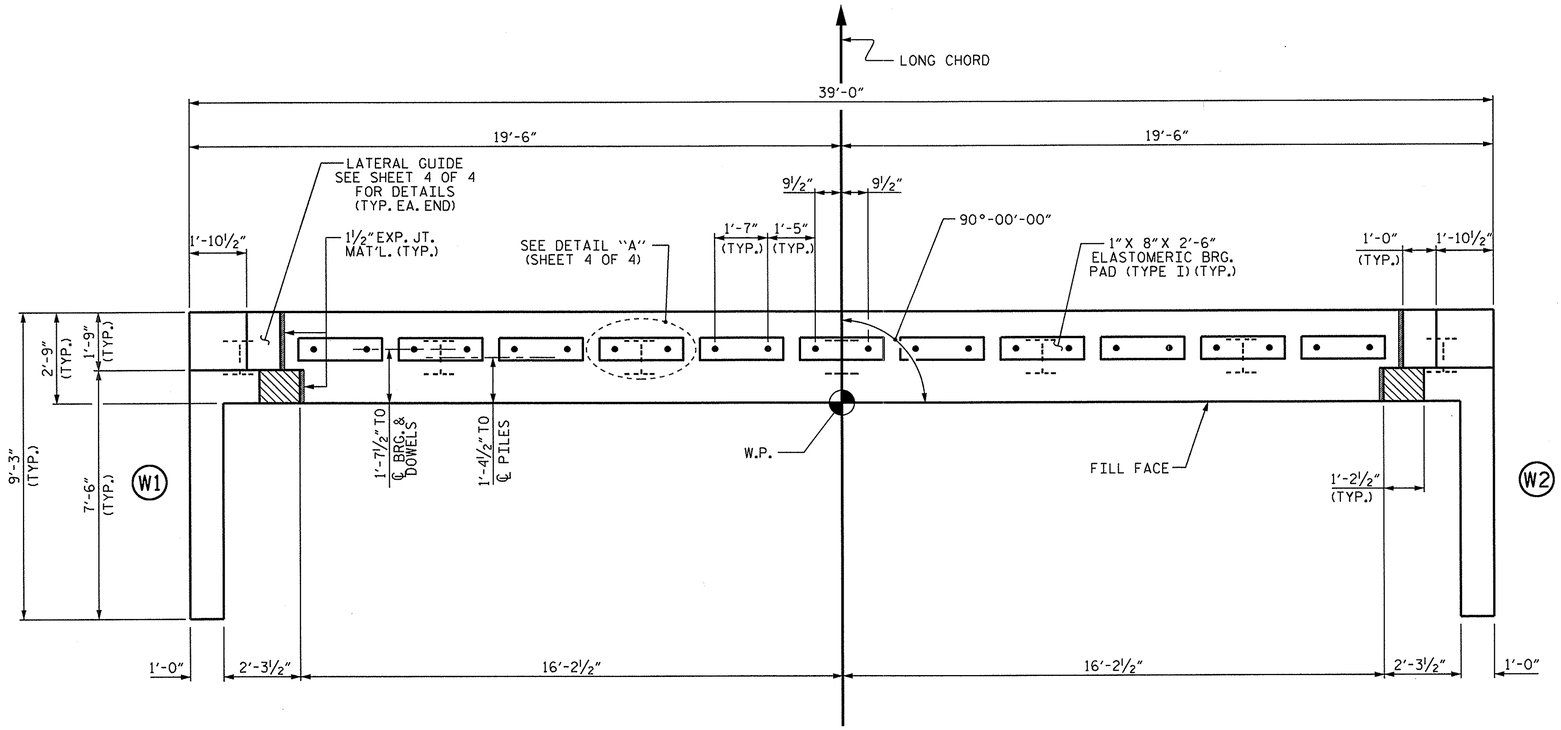

PLAN

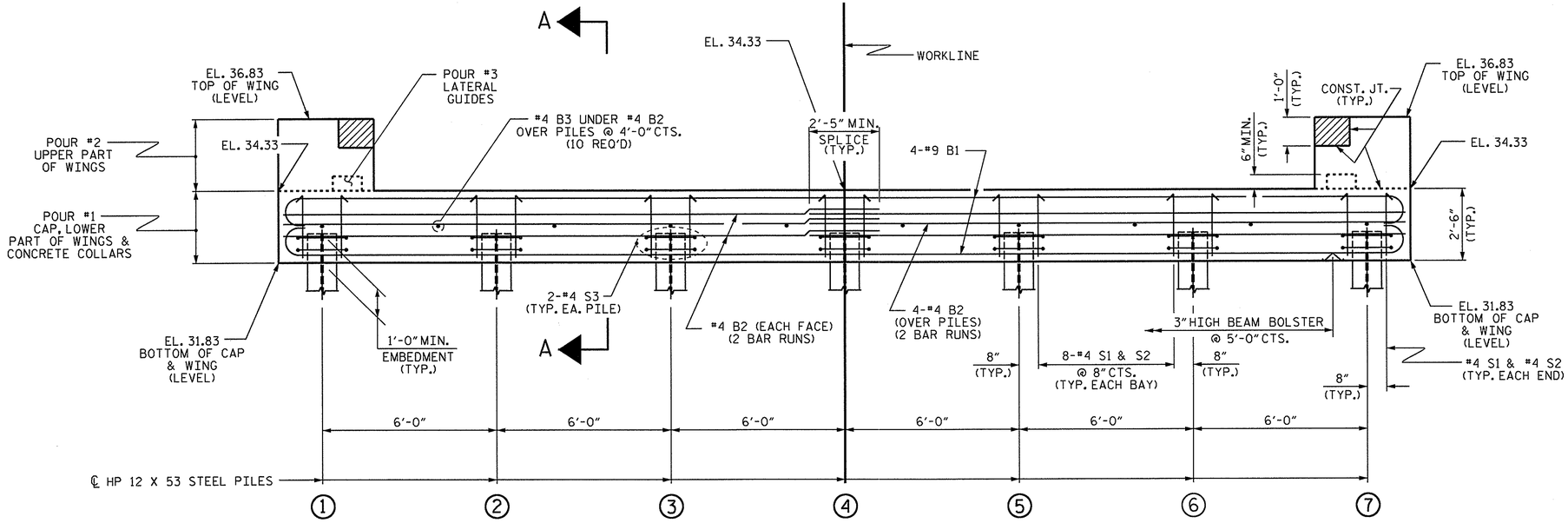

ELEVATION

WINGS NOT SHOWN FOR CLARITY.
FOR SECTION A-A, SEE SHEET 4 OF 4.
CONCRETE COLLARS FOR STEEL PILES NOT SHOWN IN PLAN AND ELEVATION VIEWS FOR CLARITY.
SEE "CORROSION PROTECTION FOR STEEL PILES DETAIL", SHEET 4 OF 4.

NOTES

STIRRUPS IN CAP MAY BE SHIFTED AS NECESSARY TO CLEAR DOWELS.

THE LATERAL GUIDES ARE NOT TO BE POURED UNTIL AFTER THE CORED SLAB UNITS ARE IN PLACE.

THE CONCRETE IN THE SHADED AREA OF THE WING SHALL BE POURED AFTER THE VERTICAL CONCRETE BARRIER RAIL IS CAST IF SLIP FORMING IS USED.

FOR PILE SPLICE DETAILS, SEE SHEET 4 OF 4.

FOR WING DETAILS, SEE SHEET 3 OF 4.

THE CONTRACTOR HAS THE OPTION TO OMIT THE LATERAL GUIDE IF APPROVED BY THE ENGINEER.

INSTALL THE 4"Ø DRAIN PIPE THROUGH THE WING WALL AS REQUIRED FOR REINFORCED BRIDGE APPROACH FILLS, SEE THE ROADWAY PLANS. REINFORCING STEEL IN THE WING WALL MAY BE SHIFTED AS NECESSARY TO CLEAR THE DRAIN PIPE.

PROJECT NO. 17BP.1.R.23
BERTIE COUNTY
STATION: 12+47.50 -L-

SHEET 1 OF 4

STATE OF NORTH CAROLINA
DEPARTMENT OF TRANSPORTATION
RALEIGH

SUBSTRUCTURE

END BENT No. 1

NORTH CAROLINA PROFESSIONAL SEAL 14045 ENGINEER TIMOTHY K. COGGINS
08/16/12

ASSEMBLED BY : C. J. BUTLER	DATE :08/07/12
CHECKED BY : K.P.SEDAI	DATE :08/10/12
DRAWN BY : DGE 02/10	
CHECKED BY : MKT 02/10	

REVISIONS						SHEET NO.
NO.	BY:	DATE:	NO.	BY:	DATE:	S-13
1			3			TOTAL SHEETS
2			4			20

16-AUG-2012 09:35
S:\DPG1\Tim\17BP.1.R.23\cjbutler\17BP.1.R.23_SD_CS.dgn
tcoggins

STD. NO. EB_33_90S

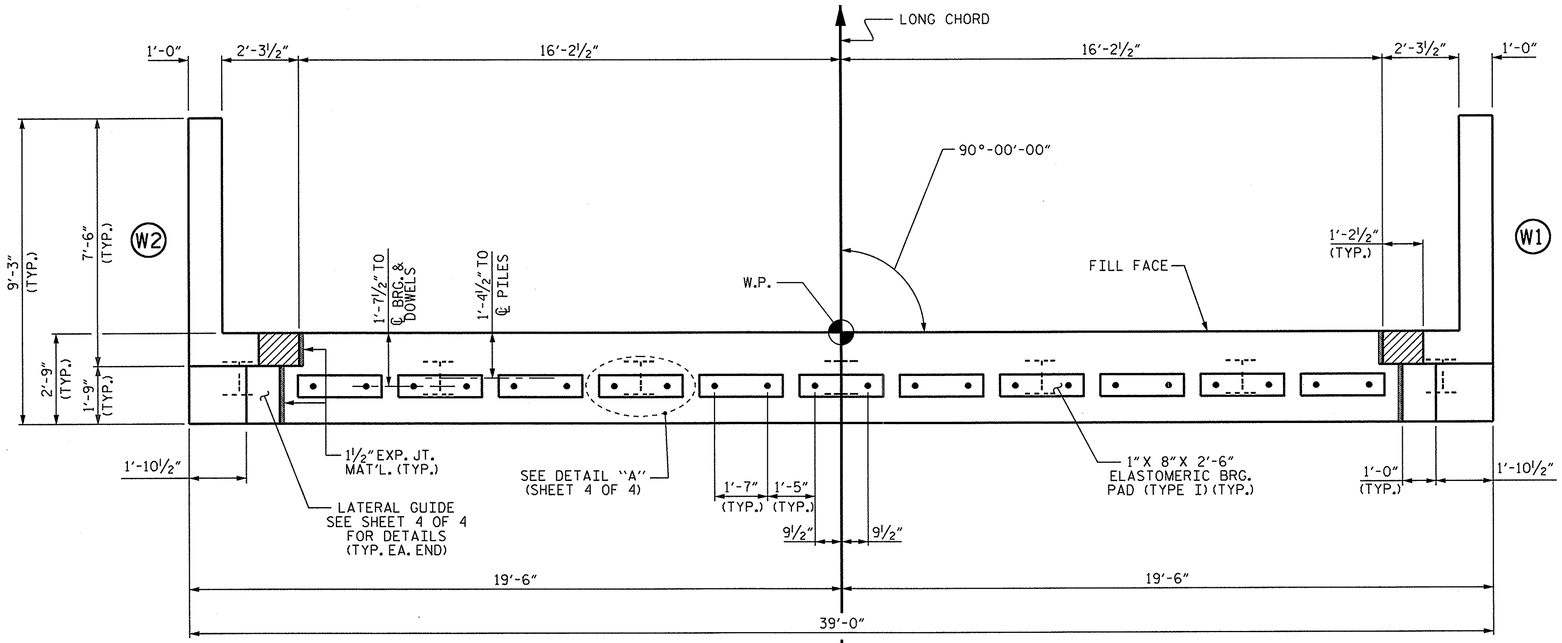

PLAN

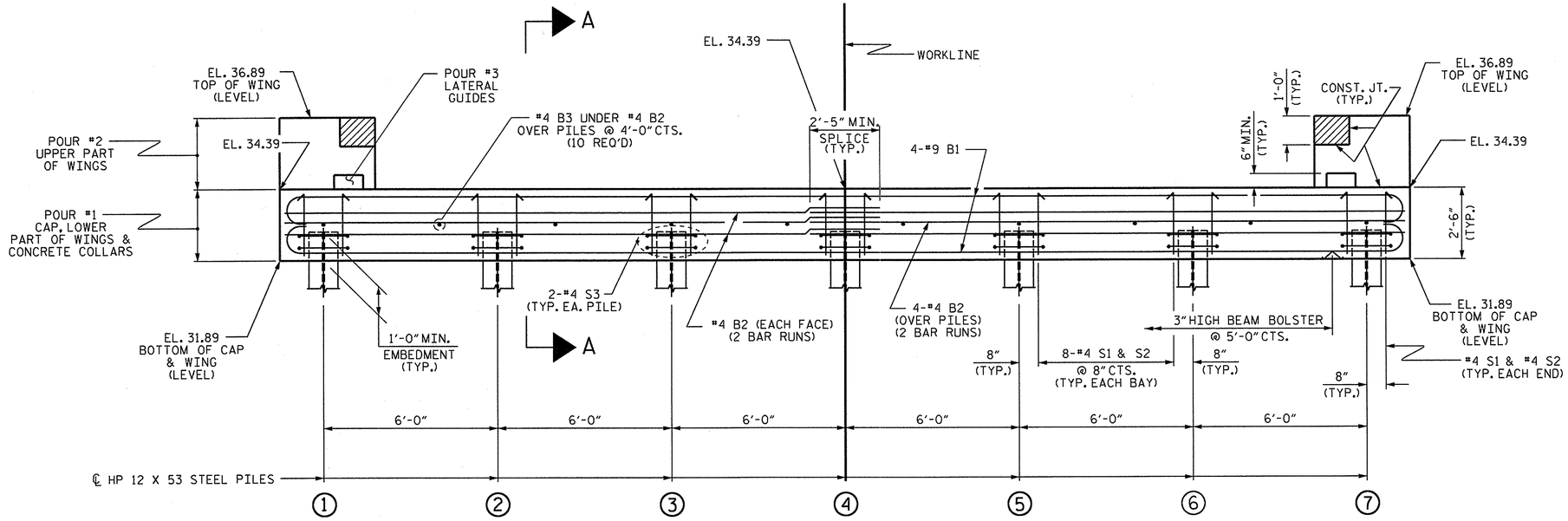

ELEVATION

WINGS NOT SHOWN FOR CLARITY.
FOR SECTION A-A, SEE SHEET 4 OF 4.
CONCRETE COLLARS FOR STEEL PILES NOT SHOWN IN PLAN AND ELEVATION VIEWS FOR CLARITY.
SEE "CORROSION PROTECTION FOR STEEL PILES DETAIL", SHEET 4 OF 4.

NOTES

STIRRUPS IN CAP MAY BE SHIFTED AS NECESSARY TO CLEAR DOWELS.

THE LATERAL GUIDES ARE NOT TO BE POURED UNTIL AFTER THE CORED SLAB UNITS ARE IN PLACE.

THE CONCRETE IN THE SHADED AREA OF THE WING SHALL BE POURED AFTER THE VERTICAL CONCRETE BARRIER RAIL IS CAST IF SLIP FORMING IS USED.

FOR PILE SPLICE DETAILS, SEE SHEET 4 OF 4.

FOR WING DETAILS, SEE SHEET 3 OF 4.

THE CONTRACTOR HAS THE OPTION TO OMIT THE LATERAL GUIDE IF APPROVED BY THE ENGINEER.

INSTALL THE 4"Ø DRAIN PIPE THROUGH THE WING WALL AS REQUIRED FOR REINFORCED BRIDGE APPROACH FILLS, SEE THE ROADWAY PLANS. REINFORCING STEEL IN THE WING WALL MAY BE SHIFTED AS NECESSARY TO CLEAR THE DRAIN PIPE.

PROJECT NO. 17BP.1.R.23
BERTIE COUNTY
STATION: 12+47.50 -L-

SHEET 2 OF 4

STATE OF NORTH CAROLINA
DEPARTMENT OF TRANSPORTATION
RALEIGH

SUBSTRUCTURE

END BENT No. 2

NORTH CAROLINA PROFESSIONAL SEAL 14045 ENGINEER TIMOTHY K. COGGINS
08/16/12

REVISIONS						SHEET NO.
NO.	BY:	DATE:	NO.	BY:	DATE:	S-14
1			3			TOTAL SHEETS
2			4			20

ASSEMBLED BY : C. J. BUTLER	DATE :08/07/12
CHECKED BY : K.P.SEDAI	DATE :08/10/12
DRAWN BY : DGE 02/10	
CHECKED BY : MKT 02/10	

16-AUG-2012 09:34
S:\DPG1\Tim\17BP.1.R.23\cjbutler\17BP.1.R.23_SD_CS.dgn
tcoggins

STD. NO. EB_33_90S

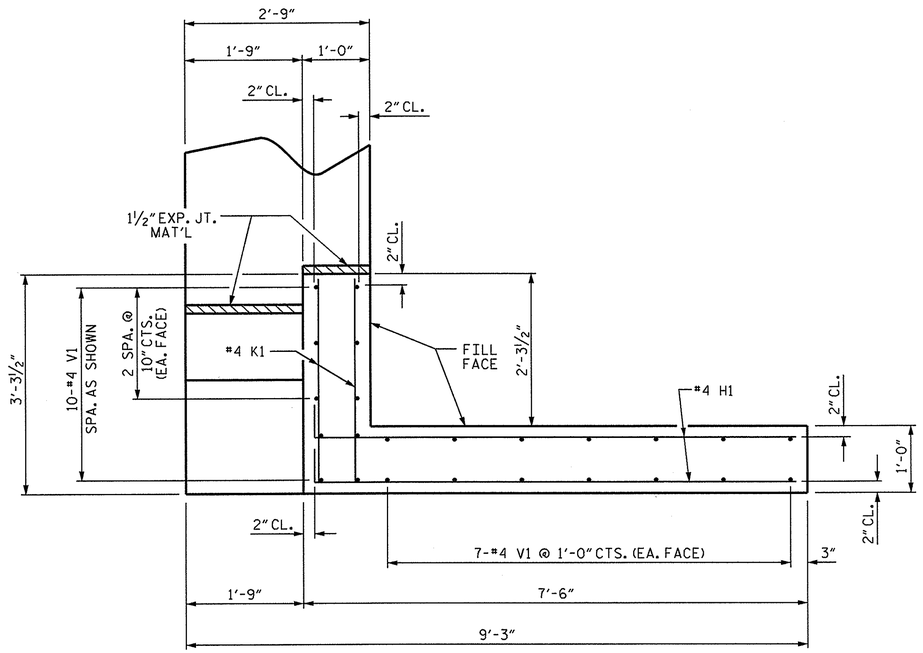

PLAN OF WING (W1)

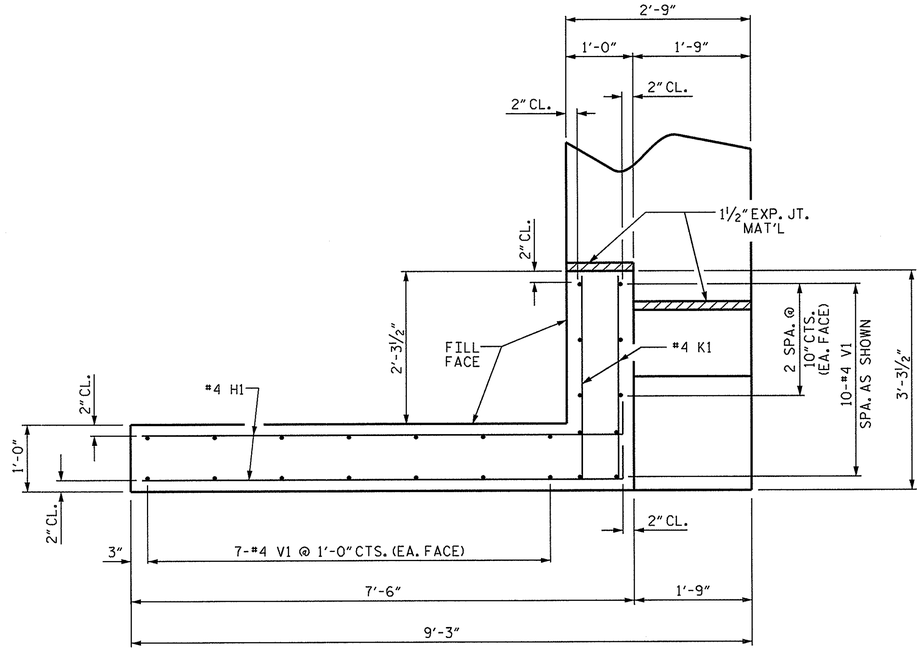

PLAN OF WING (W2)

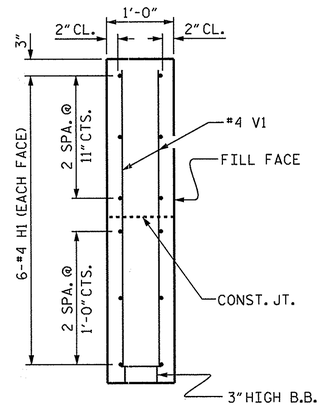

SECTION X-X

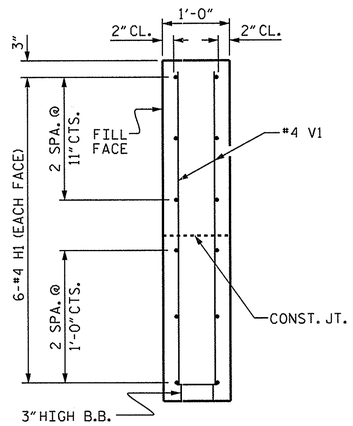

SECTION Y-Y

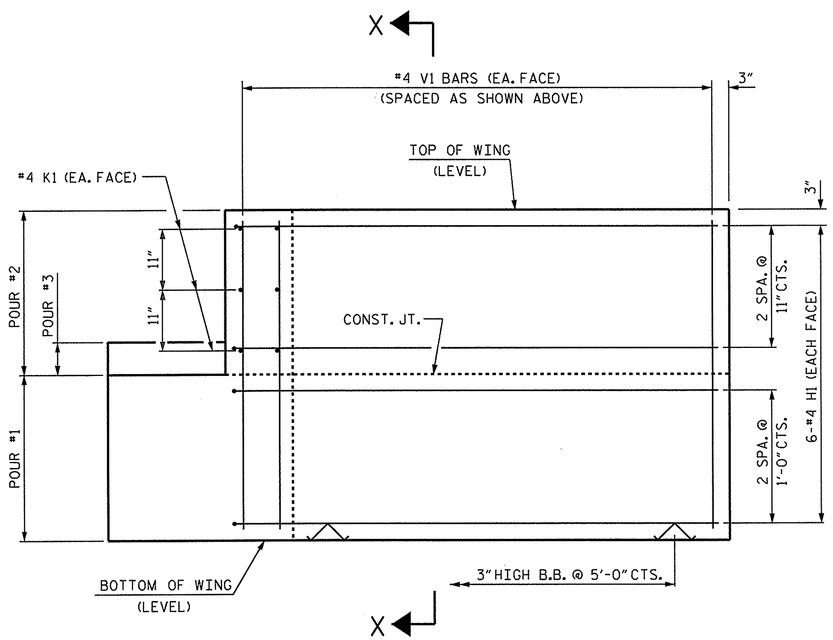

ELEVATION OF WING (W1)

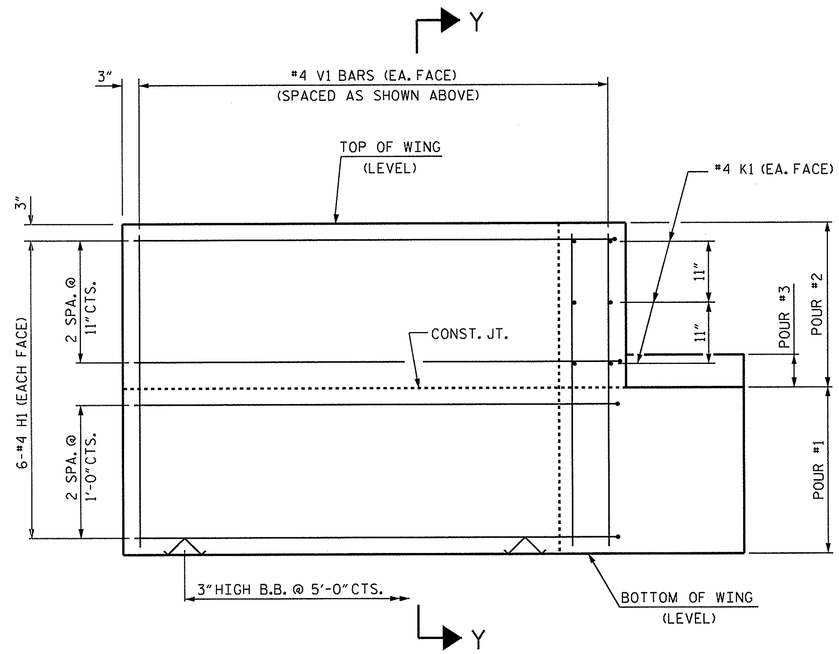

ELEVATION OF WING (W2)

WING DETAILS

PROJECT NO. 17BP.1.R.23

BERTIE COUNTY

STATION: 12+47.50 -L-

SHEET 3 OF 4

STATE OF NORTH CAROLINA
DEPARTMENT OF TRANSPORTATION
RALEIGH

SUBSTRUCTURE

END BENT
WING DETAILS

NORTH CAROLINA PROFESSIONAL SEAL 14045 ENGINEER TIMOTHY L. COGGINS
08/16/12

REVISIONS						SHEET NO.
NO.	BY:	DATE:	NO.	BY:	DATE:	S-15
1			3			TOTAL SHEETS
2			4			20

ASSEMBLED BY : C. J. BUTLER	DATE : 08/07/12
CHECKED BY : K.P.SEDAI	DATE : 08/10/12
DRAWN BY : DGE 02/10	
CHECKED BY : MKT 02/10	

16-AUG-2012 09:34
S:\DPG1\Tim\17BP.1.R.23\cjbutler\17BP.1.R.23_SD_CS.dgn
tcoggins

STD. NO. EB_33_90S

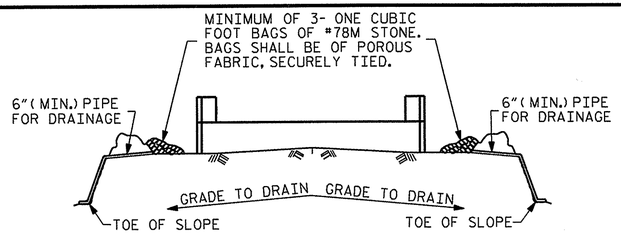

BAGGED STONE AND PIPE SHALL BE PLACED IMMEDIATELY AFTER COMPLETION OF END BENT EXCAVATION. PIPE MAY BE EITHER CONCRETE, CORRUGATED STEEL, CORRUGATED ALUMINUM ALLOY, OR CORRUGATED PLASTIC. PERFORATED PIPE WILL NOT BE ALLOWED.

BAGGED STONE SHALL REMAIN IN PLACE UNTIL THE ENGINEER DIRECTS THAT IT BE REMOVED. THE CONTRACTOR SHALL REMOVE AND DISPOSE OF SILT ACCUMULATIONS AT BAGGED STONE WHEN SO DIRECTED BY THE ENGINEER. BAGS SHALL BE REMOVED AND REPLACED WHENEVER THE ENGINEER DETERMINES THAT THEY HAVE DETERIORATED AND LOST THEIR EFFECTIVENESS.

NO SEPARATE PAYMENT WILL BE MADE FOR THIS WORK AND THE ENTIRE COST OF THIS WORK SHALL BE INCLUDED IN THE UNIT CONTRACT PRICE BID FOR THE SEVERAL PAY ITEMS.

TEMPORARY DRAINAGE AT END BENT

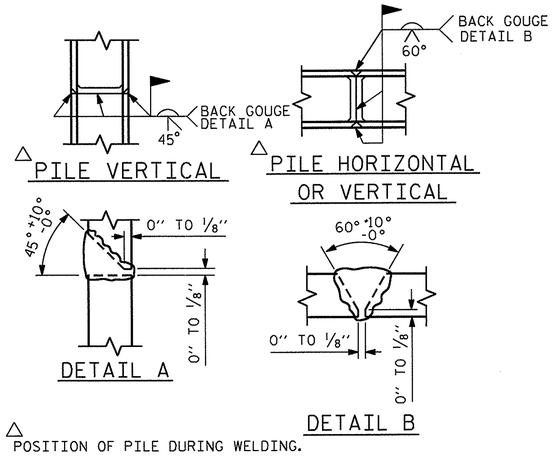

△ POSITION OF PILE DURING WELDING.

PILE SPLICE DETAILS

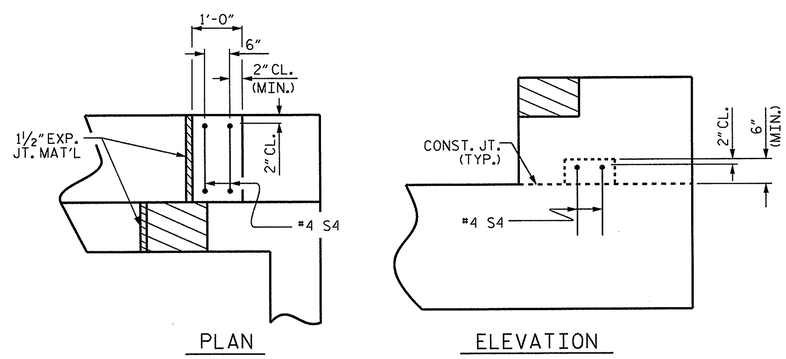

LATERAL GUIDE DETAILS

(RIGHT LATERAL GUIDE SHOWN, LEFT END SIMILAR)

BAR TYPES

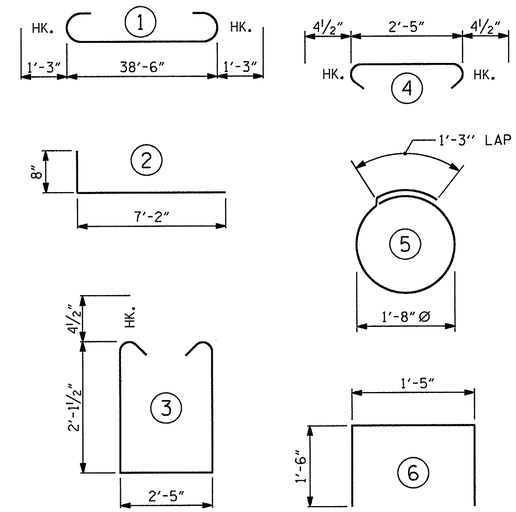

ALL BAR DIMENSIONS ARE OUT TO OUT.

END BENT No. 1	END BENT No. 2
HP 12 X 53 STEEL PILES	HP 12 X 53 STEEL PILES
NO: 7 LIN. FT.= 441	NO: 7 LIN. FT.= 420
PLIE REDRIVES	PILE REDRIVES
EA. 2	EA. 2

BILL OF MATERIAL FOR ONE END BENT

BAR	NO.	SIZE	TYPE	LENGTH	WEIGHT
B1	8	#9	1	41'-0"	1115
B2	16	#4	STR	20'-7"	220
B3	10	#4	STR	2'-5"	16
D1	22	#6	STR	1'-6"	50
H1	24	#4	2	7'-10"	126
K1	12	#4	STR	2'-11"	23
S1	50	#4	3	7'-5"	248
S2	50	#4	4	3'-2"	106
S3	14	#4	5	6'-6"	61
S4	4	#4	6	4'-5"	12
V1	48	#4	STR	4'-8"	150
REINFORCING STEEL (FOR ONE END BENT)					2127 LBS.

CLASS A CONCRETE BREAKDOWN (FOR ONE END BENT)

POUR #1	CAP, LOWER PART OF WINGS & COLLARS	12.4 C.Y.
POUR #2	UPPER PART OF WINGS	1.8 C.Y.
POUR #3	LATERAL GUIDES	0.1 C.Y.
TOTAL CLASS A CONCRETE		14.3 C.Y.

REFER TO SPECIAL PROVISIONS FOR GALVANIZATION OF STEEL PILES

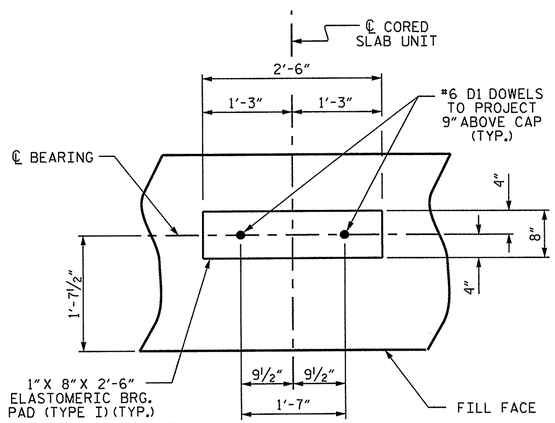

DETAIL "A"

(END BENT No. 1 SHOWN, END BENT No. 2 SIMILAR BY ROTATION)

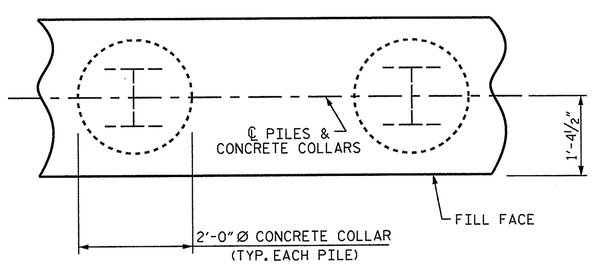

PLAN

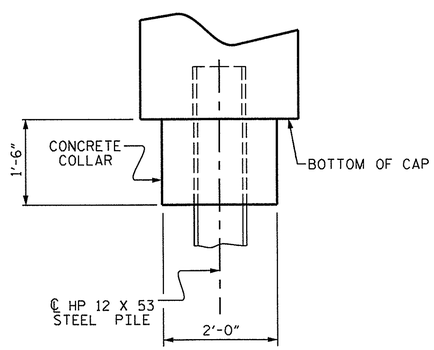

ELEVATION

CORROSION PROTECTION FOR STEEL PILES DETAIL

(END BENT No. 1 SHOWN, END BENT No. 2 SIMILAR BY ROTATION)

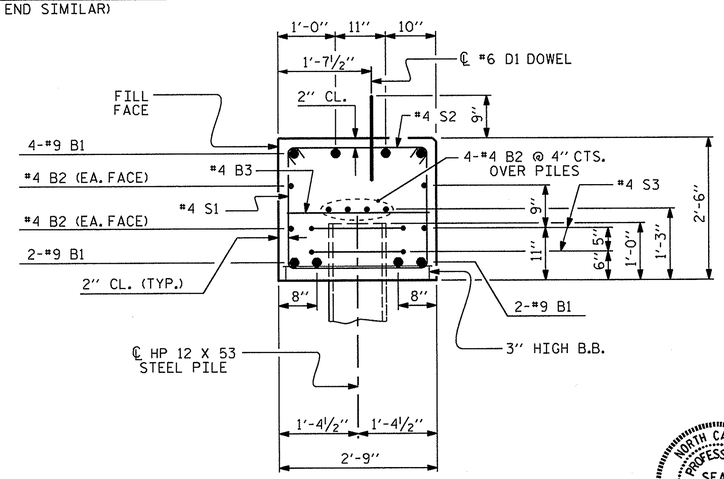

SECTION A-A

(CONCRETE COLLAR NOT SHOWN FOR CLARITY. SEE "CORROSION PROTECTION FOR STEEL PILES DETAIL.")

NORTH CAROLINA PROFESSIONAL SEAL 14045 ENGINEER TIMOTHY L. COGGINS

08/16/12

PROJECT NO. 17BP.1.R.23

BERTIE COUNTY

STATION: 12+47.5 -L-

SHEET 4 OF 4

STATE OF NORTH CAROLINA
DEPARTMENT OF TRANSPORTATION
RALEIGH

SUBSTRUCTURE

END BENT No. 1 & 2 DETAILS

REVISIONS						SHEET NO.
NO.	BY:	DATE:	NO.	BY:	DATE:	S-16
1			3			TOTAL SHEETS
2			4			20

ASSEMBLED BY : C. J. BUTLER	DATE : 08/07/12	
CHECKED BY : K.P.SEDAI	DATE : 08/10/12	
DRAWN BY : DGE	02/10	
CHECKED BY : MKT	02/10	

16-AUG-2012 09:33
S:\DPGI\Tim\17BP.1.R.23\cjbutler\17BP.1.R.23_SD_CS.dgn
tcoggins

STD. NO. EB_33_90S

NOTES

STIRRUPS IN CAP MAY BE SHIFTED AS NECESSARY TO CLEAR DOWELS.

THE LATERAL GUIDES ARE NOT TO BE POURED UNTIL AFTER THE CORED SLAB UNITS ARE IN PLACE.

★ INVERT ALTERNATE STIRRUPS.

~~GALVANIZE THE TOP OF EACH INTERIOR BENT PILE A MINIMUM OF 35 FEET. GALVANIZE IN ACCORDANCE WITH SECTION 1076 OF THE STANDARD SPECIFICATIONS.~~

THE CONTRACTOR HAS THE OPTION TO OMIT THE LATERAL GUIDE IF APPROVED BY THE ENGINEER.

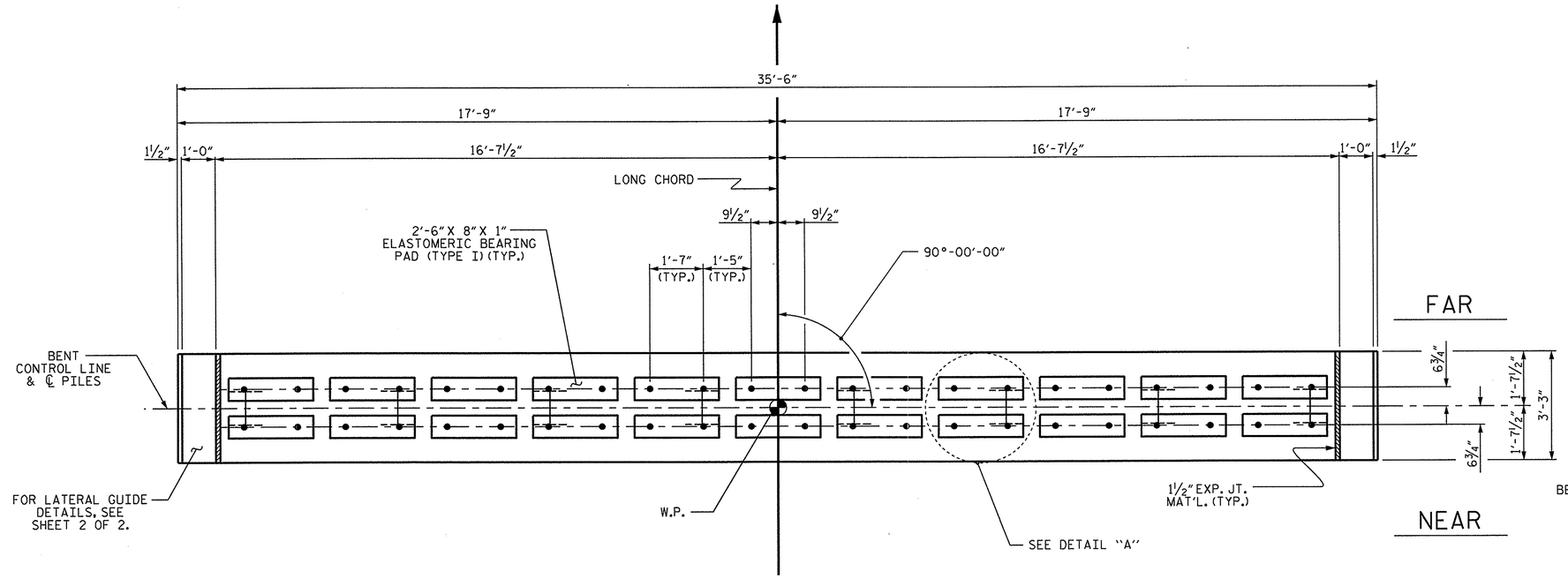

PLAN

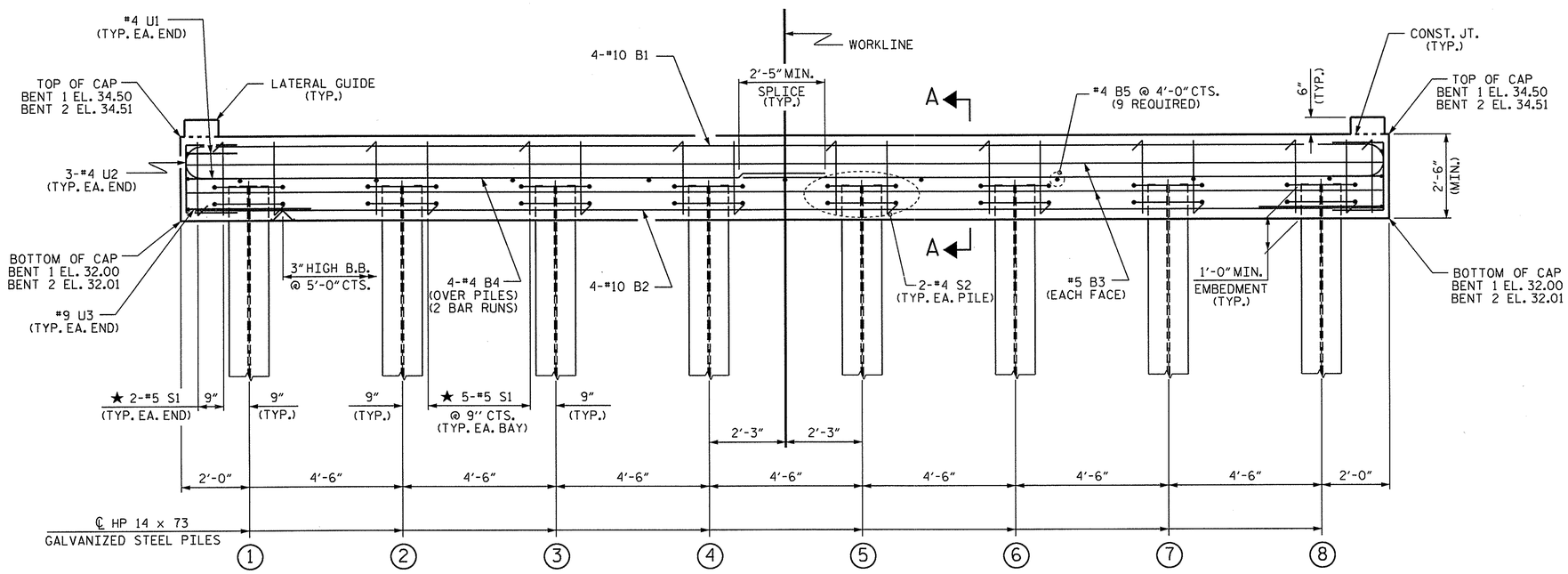

ELEVATION

FOR SECTION A-A, SEE SHEET 2 OF 2

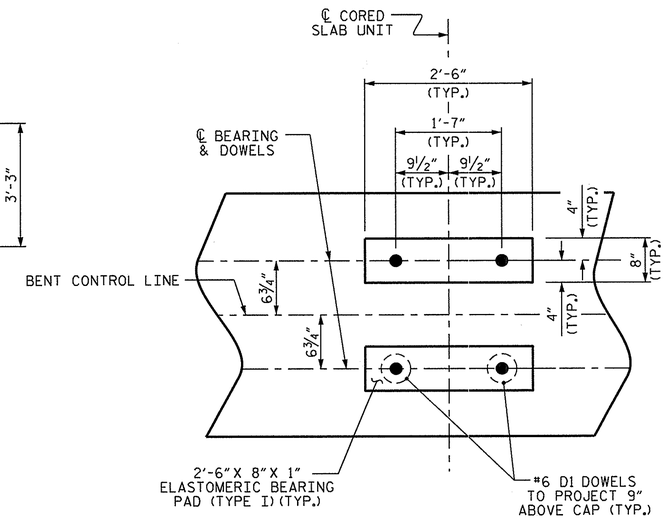

DETAIL "A"

(DIMENSIONS ARE TYPICAL EACH BEARING)

PROJECT NO. 17BP.1.R.23

BERTIE COUNTY

STATION: 12+47.50 -L-

SHEET 1 OF 2

STATE OF NORTH CAROLINA
DEPARTMENT OF TRANSPORTATION
RALEIGH

SUBSTRUCTURE

BENTS 1 & 2

NORTH CAROLINA PROFESSIONAL SEAL 14045 ENGINEER TIMOTHY K. COGGINS
08/16/12

REVISIONS								SHEET NO.
NO.	BY:	DATE:	NO.	BY:	DATE:			S-17
1			3					TOTAL SHEETS
2			4					20

ASSEMBLED BY : C. J. BUTLER	DATE : 08/08/12
CHECKED BY : K.P.SEDAI	DATE : 08/10/12
DRAWN BY : DGE 05/10	
CHECKED BY : MKT 05/10	

16-AUG-2012 09:33
S:\DPG1\Tim\17BP.1.R.23\cjbutler\17BP.1.R.23_SD_CS.dgn
tcoggins

STD. NO. 14" HP_BT_33_90S_<60'

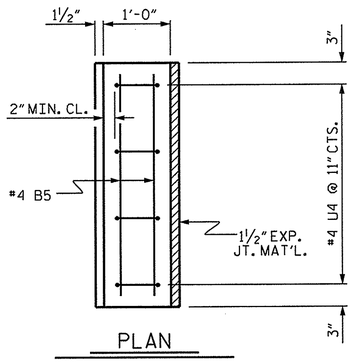

PLAN

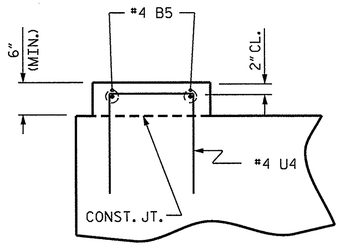

ELEVATION

LATERAL GUIDE DETAILS

(LEFT LATERAL GUIDE SHOWN, RIGHT SIDE SIMILAR)

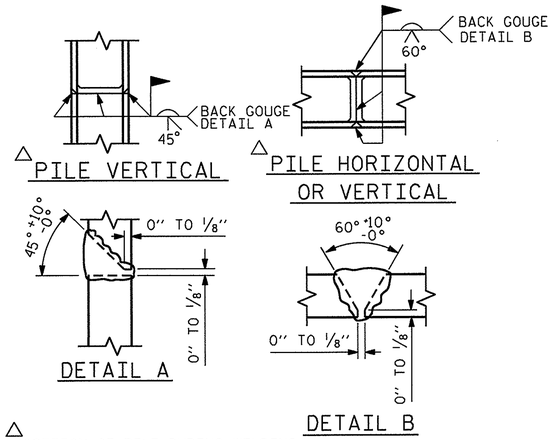

△ PILE VERTICAL

△ PILE HORIZONTAL OR VERTICAL

DETAIL A

DETAIL B

△ POSITION OF PILE DURING WELDING.

PILE SPLICE DETAILS

BAR TYPES

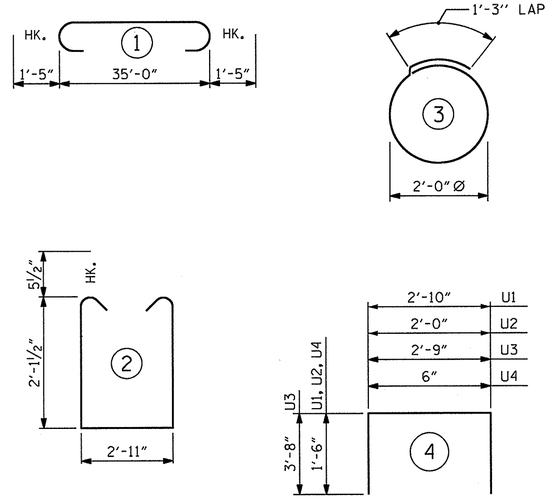

ALL BAR DIMENSIONS ARE OUT TO OUT.

BILL OF MATERIAL

FOR ONE BENT

BAR	NO.	SIZE	TYPE	LENGTH	WEIGHT
B1	4	#10	1	37'-10"	651
B2	4	#10	STR	35'-2"	605
B3	4	#5	STR	35'-2"	147
B4	8	#4	STR	18'-10"	101
B5	13	#4	STR	2'-11"	25
D1	44	#6	STR	1'-6"	99
S1	39	#5	2	8'-1"	329
S2	16	#4	3	7'-7"	81
U1	4	#4	4	5'-10"	16
U2	6	#4	4	5'-0"	20
U3	2	#9	4	10'-1"	69
U4	8	#4	4	3'-6"	19

REINFORCING STEEL (FOR ONE BENT) 2162 LBS

CLASS A CONCRETE BREAKDOWN (FOR ONE BENT)

POUR #1 (CAP) 10.7 C.Y.

POUR #2 (LATERAL GUIDES) 0.1 C.Y.

TOTAL CLASS A CONCRETE 10.8 C.Y.

HP 14 X 73 ~~GALVANIZED~~ STEEL PILES

BENT 1:
No. 8 LIN. FT. 624

BENT 2:
No. 8 LIN. FT. 632

PILE REDRIVES EA. 2

REFER TO SPECIAL PROVISIONS FOR GALVANIZATION OF STEEL PILES

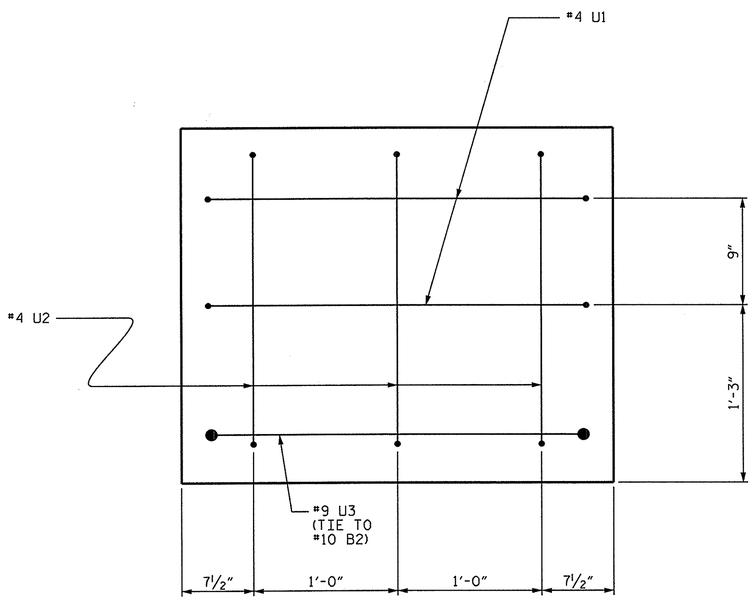

END OF CAP VIEW

(TYPICAL BOTH ENDS)

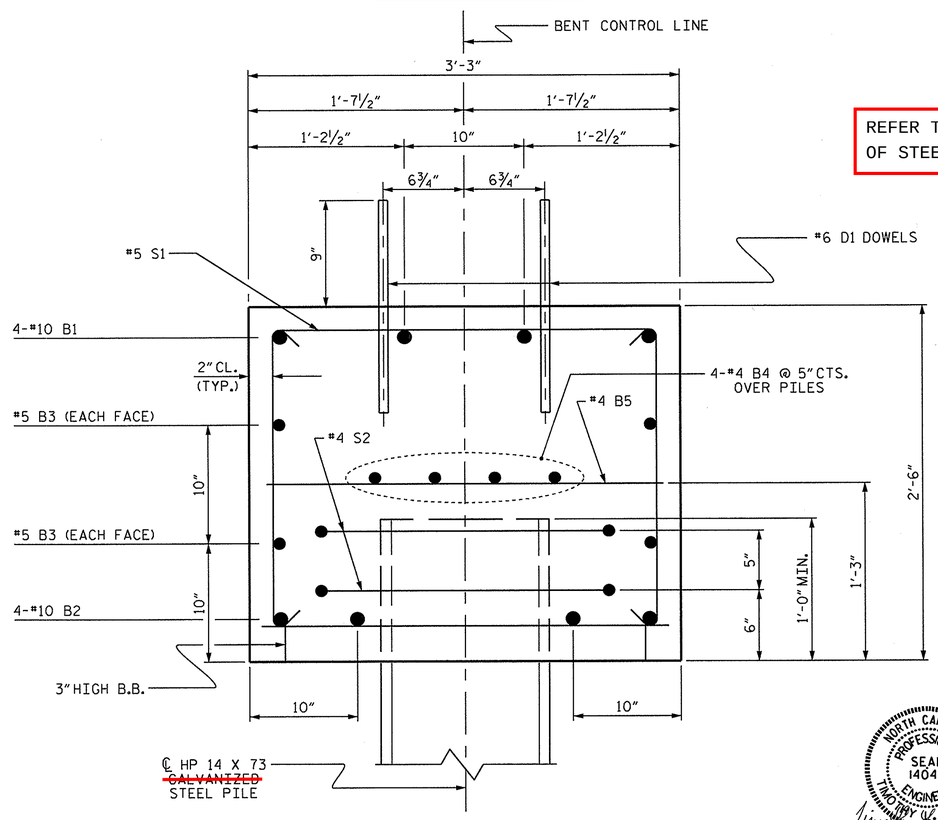

SECTION A-A

NORTH CAROLINA PROFESSIONAL SEAL 14045 ENGINEER TIMOTHY W. COGGINS
08/16/12

PROJECT NO. 17BP.1.R.23

BERTIE COUNTY

STATION: 12+47.50 -L-

SHEET 2 OF 2

STATE OF NORTH CAROLINA
DEPARTMENT OF TRANSPORTATION
RALEIGH

SUBSTRUCTURE

BENTS 1 & 2

REVISIONS							SHEET NO.
NO.	BY:	DATE:	NO.	BY:	DATE:		S-18
1			3				TOTAL SHEETS
2			4				20

DRAWN BY : C. J. BUTLER DATE : 08/08/12
CHECKED BY : K.P.SEDAI DATE : 08/10/12

DRAWN BY : DGE 05/10
CHECKED BY : MKT 05/10

16-AUG-2012 09:32
S:\DPG1\Tim\17BP.1.R.23\cjbutler\17BP.1.R.23_SD_CS.dgn
tcoggins

STD. NO. 14" HP_BT_33_90S_<60'

NOTES :

FOR BERM WIDTH DIMENSIONS, SEE GENERAL DRAWING.

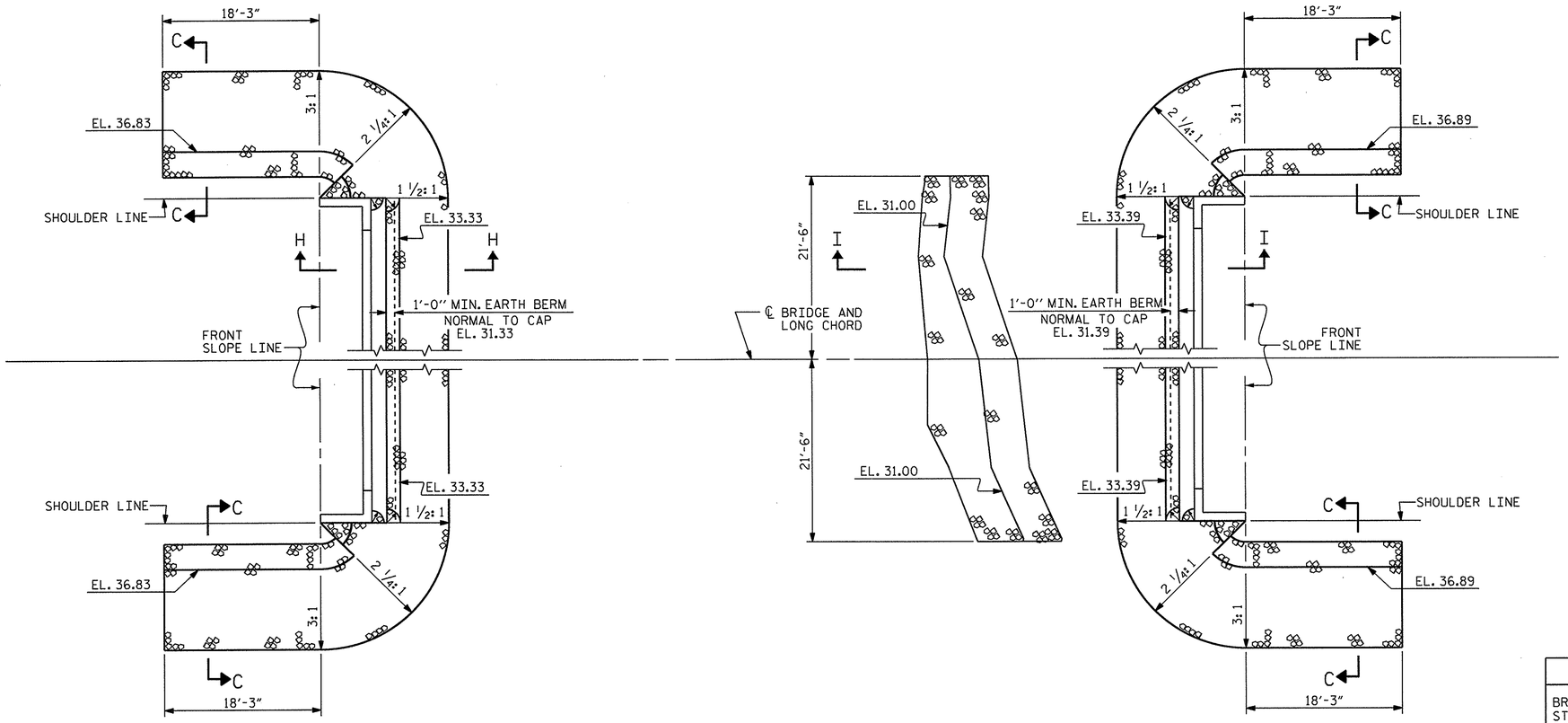

END BENT 1

END BENT 2

PLAN

ESTIMATED QUANTITIES		
BRIDGE @ STA. 12+47.50 -L-	RIP RAP CLASS II (2'-0" THICK)	GEOTEXTILE FOR DRAINAGE
	TONS	SQUARE YARDS
END BENT 1	162	181
END BENT 2	222	246
BANK STABILIZATION	45	50

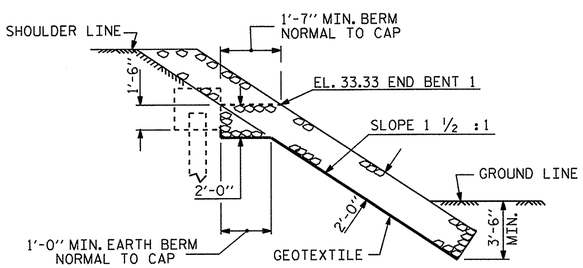

SECTION H-H

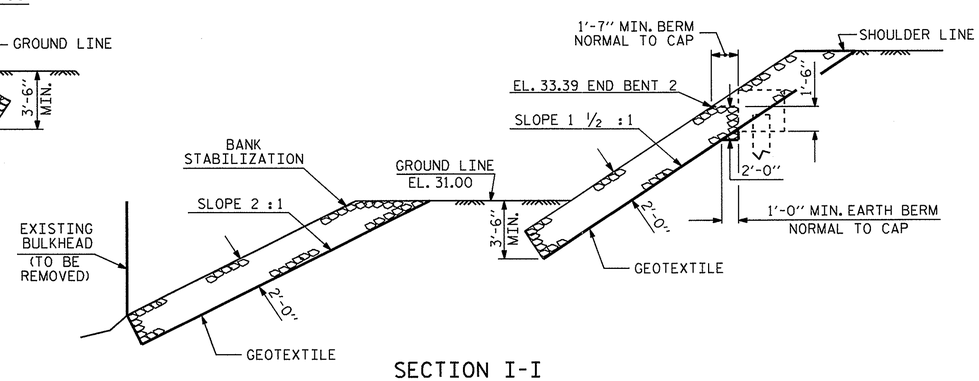

SECTION I-I

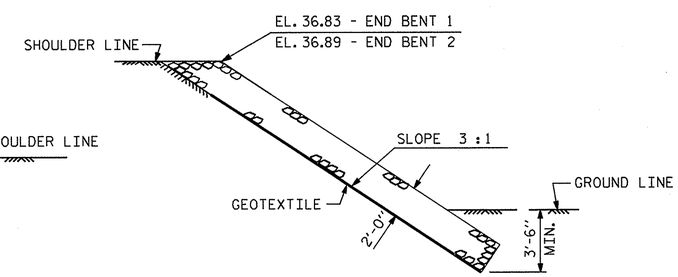

SECTION C-C

PROJECT NO. 17BP.1.R.23

BERTIE COUNTY

STATION: 12+47.50 -L-

STATE OF NORTH CAROLINA
DEPARTMENT OF TRANSPORTATION
RALEIGH

STANDARD

RIP RAP DETAILS

NORTH CAROLINA PROFESSIONAL SEAL 14045 ENGINEER TIMOTHY L. COGGINS
08/16/12

REVISIONS						SHEET NO.
NO.	BY:	DATE:	NO.	BY:	DATE:	S-19
1			3			TOTAL SHEETS
2			4			20

ASSEMBLED BY : C. J. BUTLER DATE : 08/07/12
CHECKED BY : K. P. SEDAI DATE : 08/10/12

DRAWN BY : REK 1/84
CHECKED BY : RDU 1/84

REV. 5/1/06R TLA/GM
REV. 10/1/11 MAA/GM
REV. 12/21/11 MAA/GM

16-AUG-2012 11:53
S:\DPG1\Tim\17BP.1.R.23\cjbutler\17BP.1.R.23_SD_CS.dgn
tcoggins

STD. NO. RR1 (Sht 2)

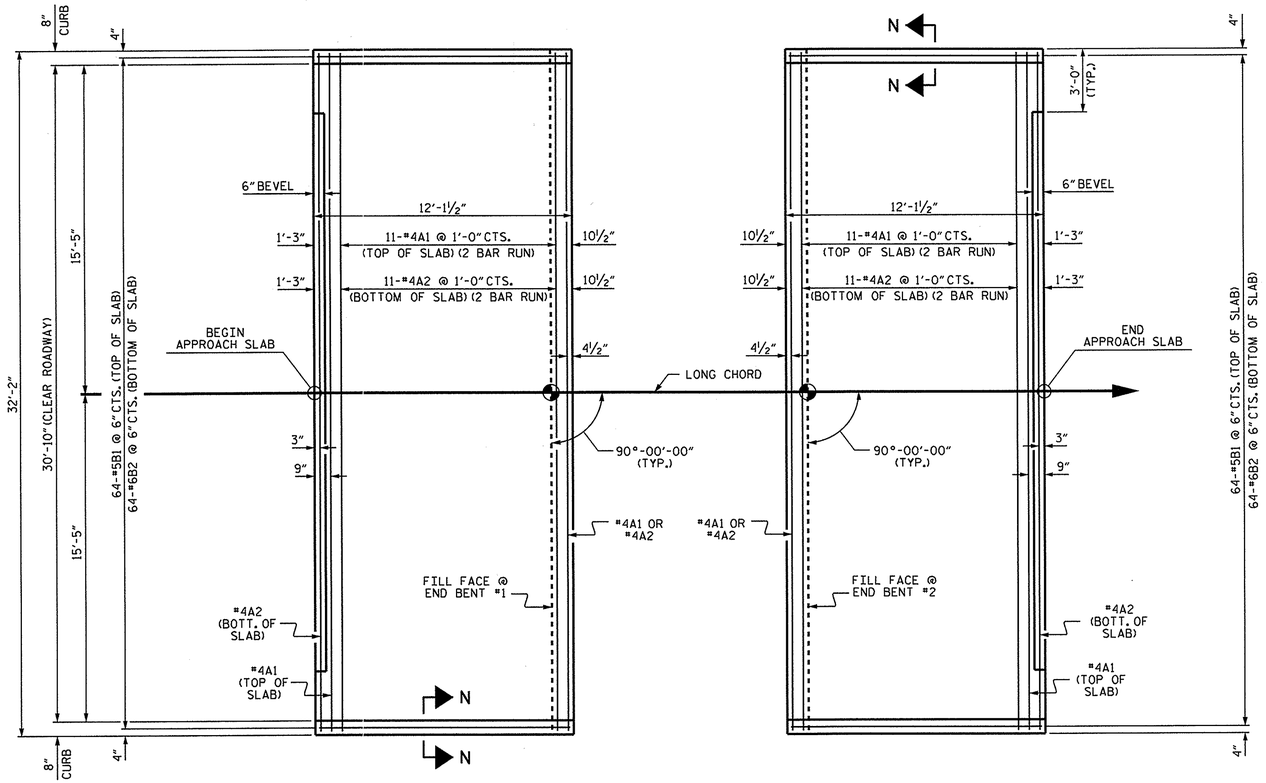

PLAN @ END BENT #1

PLAN @ END BENT #2

DIMENSIONS SHOWN ARE TYPICAL FOR BOTH APPROACH SLABS

NOTES

FOR REINFORCED BRIDGE APPROACH FILL INCLUDING GEOTEXTILE, IMPERMEABLE GEOMEMBRANE, 4" Ø DRAINAGE PIPE, #78M STONE, AND SELECT MATERIAL, SEE ROADWAY PLANS.

AREA BETWEEN THE WINGWALL AND APPROACH SLAB SHALL BE GRADED TO DRAIN THE WATER AWAY FROM THE FILL FACE OF THE BRIDGE AND SHALL BE PAVED. SEE ROADWAY PLANS.

APPROACH SLAB GROOVING IS NOT REQUIRED.

BILL OF MATERIAL

APPROACH SLAB AT EB #1

BAR	NO.	SIZE	TYPE	LENGTH	WEIGHT
* A1	26	#4	STR	16'-11"	294
A2	26	#4	STR	16'-9"	291
* B1	64	#5	STR	11'-2"	745
B2	64	#6	STR	11'-8"	1121
REINFORCING STEEL				LBS.	1412
* EPOXY COATED REINFORCING STEEL				LBS.	1039
CLASS AA CONCRETE				C. Y.	18.6

APPROACH SLAB AT EB #2

BAR	NO.	SIZE	TYPE	LENGTH	WEIGHT
* A1	26	#4	STR	16'-11"	294
A2	26	#4	STR	16'-9"	291
* B1	64	#5	STR	11'-2"	745
B2	64	#6	STR	11'-8"	1121
REINFORCING STEEL				LBS.	1412
* EPOXY COATED REINFORCING STEEL				LBS.	1039
CLASS AA CONCRETE				C. Y.	18.6

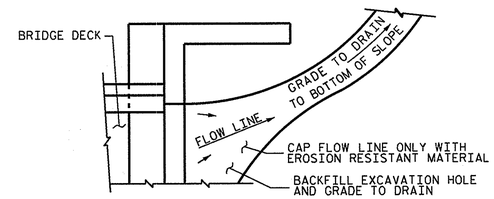

NOTE: IF THE APPROACH SLAB IS NOT CONSTRUCTED IMMEDIATELY AFTER THE BACKFILLING OF THE END BENT EXCAVATION, GRADE TO DRAIN TO THE BOTTOM OF THE SLOPE AND PROVIDE EROSION RESISTANT MATERIAL, SUCH AS FIBERGLASS ROVING OR AS DIRECTED BY THE ENGINEER TO PREVENT SOIL EROSION AND TO PROTECT THE AREA ADJACENT TO THE STRUCTURE. THE CONTRACTOR WILL BE REQUIRED TO REMOVE THESE MATERIALS PRIOR TO CONSTRUCTION OF THE APPROACH SLAB.

TEMPORARY DRAINAGE DETAIL

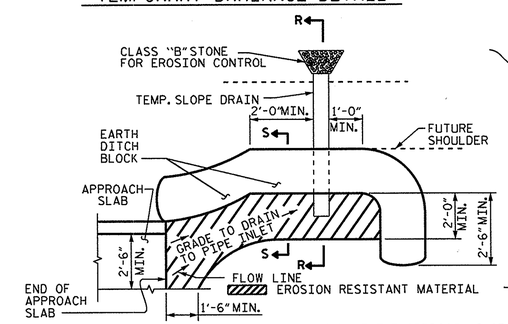

NOTE: IMMEDIATELY AFTER THE CONSTRUCTION OF THE APPROACH SLAB, THE CONTRACTOR SHALL PROVIDE TEMPORARY BERM AND SLOPE DRAIN. CONTRACTOR SHALL GRADE TO PIPE INLET AND PROVIDE EROSION RESISTANT MATERIAL AS SHOWN. THE EROSION RESISTANT MATERIAL SHALL BE EITHER 1) ASPHALT PLANT MIX, TYPE 1 OR TYPE 2, MIN. 2" DEPTH, 2) EROSION CONTROL MAT, OR 3) CONCRETE, AS DIRECTED BY THE ENGINEER. THE SLOPE DRAIN SHALL CONSIST OF A NON-PERFORATED TEMPORARY DRAINAGE PIPE, 12 INCHES IN DIAMETER.

PLAN VIEW

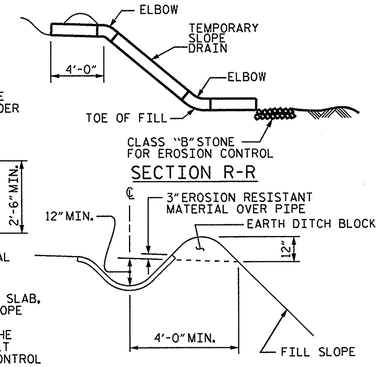

SECTION S-S

TEMPORARY BERM AND SLOPE DRAIN DETAILS

(TO BE USED WHEN SHOULDER BERM GUTTER IS REQUIRED)

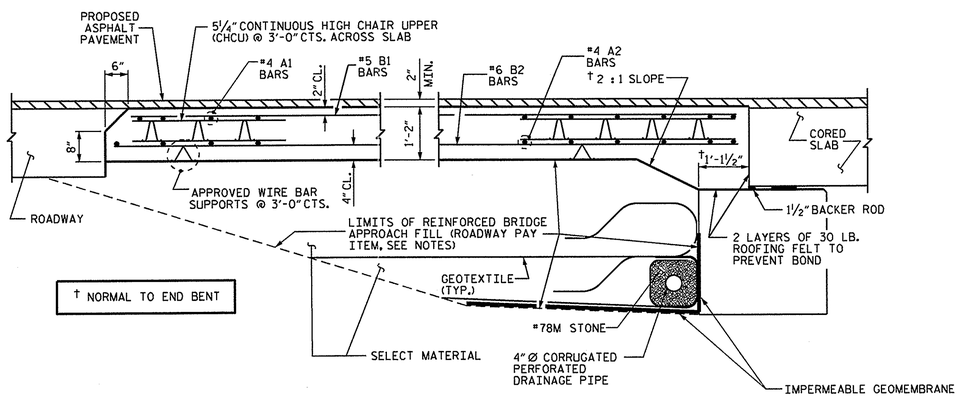

† NORMAL TO END BENT

SECTION THRU SLAB

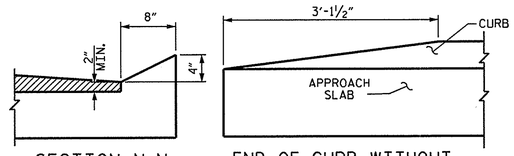

SECTION N-N

END OF CURB WITHOUT SHOULDER BERM GUTTER

CURB DETAILS

SPLICE LENGTHS		
BAR SIZE	EPOXY COATED	UNCOATED
#4	2'-0"	1'-9"
#5	2'-6"	2'-2"
#6	3'-10"	2'-7"

PROJECT NO. 17BP.1.R.23

BERTIE COUNTY

STATION: 12+47.50 -L-

STATE OF NORTH CAROLINA
DEPARTMENT OF TRANSPORTATION
RALEIGH

STANDARD
BRIDGE APPROACH SLAB
FOR PRESTRESSED CONCRETE
CORED SLAB UNIT
(SUB-REGIONAL TIER)
90° SKEW

NORTH CAROLINA PROFESSIONAL SEAL 14045 ENGINEER TIMOTHY E. COGGINS
09/04/12

REVISIONS						SHEET NO.
NO.	BY:	DATE:	NO.	BY:	DATE:	S-20
1			3			TOTAL SHEETS
2			4			20

ASSEMBLED BY : C. J. BUTLER	DATE : 08/07/12
CHECKED BY : K.P.SEDAI	DATE : 08/10/12
DRAWN BY : SHS/MAA 5-09	REV. 12-11 MAA/AAC
CHECKED BY : BCH 5-09	

04-SEP-2012 08:41
S:\DPGI\Tim\17BP.1.R.23\cjbutler\17BP.1.R.23_SD_CS.dgn
tcoggins

STD. NO. BAS_33_90S

PROJECT REFERENCE NO.	SHEET NO.
X-XXXX	EC-2H
R/W SHEET NO.	
ROADWAY DESIGN ENGINEER	HYDRAULICS ENGINEER

COIR FIBER WATTLE BARRIER DETAIL

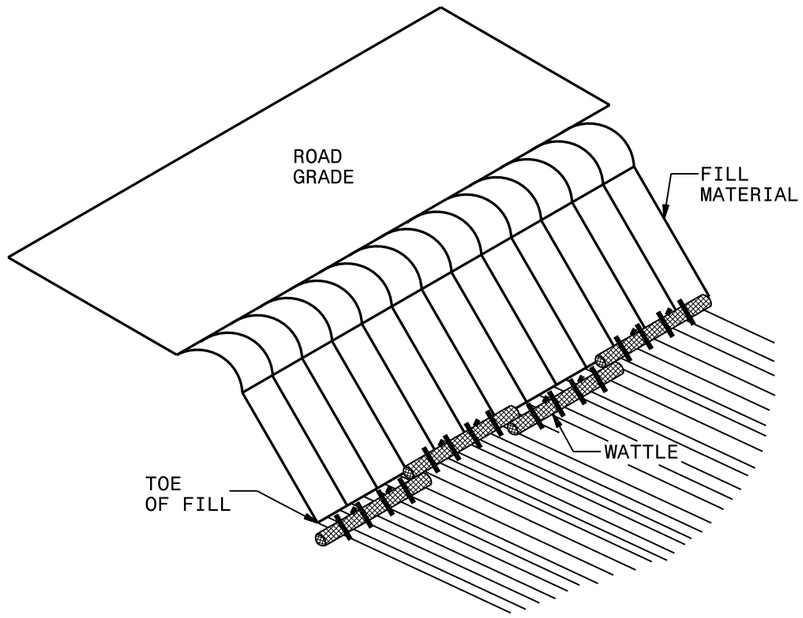

ISOMETRIC VIEW

NOTES:

USE MINIMUM 12 IN. DIAMETER COIR FIBER (COCONUT) WATTLE AND LENGTH OF 10 FT.

EXCAVATE A 1 TO 2 INCH TRENCH FOR WATTLE TO BE PLACED.

DO NOT PLACE WATTLES ON TOE OF SLOPE.

USE 2 FT. WOODEN STAKES WITH A 2 IN. BY 2 IN. NOMINAL CROSS SECTION.

INSTALL A MINIMUM OF 2 UPSLOPE STAKES AND 4 DOWNSLOPE STAKES AT AN ANGLE TO WEDGE WATTLE TO GROUND.

PROVIDE STAPLES MADE OF 0.125 IN. DIAMETER STEEL WIRE FORMED INTO A U SHAPE NOT LESS THAN 12″ IN LENGTH.

INSTALL STAPLES APPROXIMATELY EVERY 1 LINEAR FOOT ON BOTH SIDES OF WATTLE AND AT EACH END TO SECURE IT TO THE SOIL.

FOR BREAKS ALONG LARGE SLOPES, USE MAXIMUM SPACING OF 20 FT.

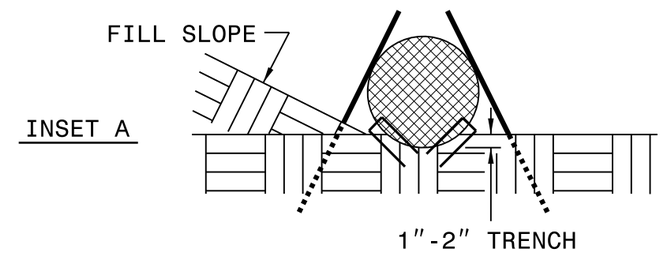

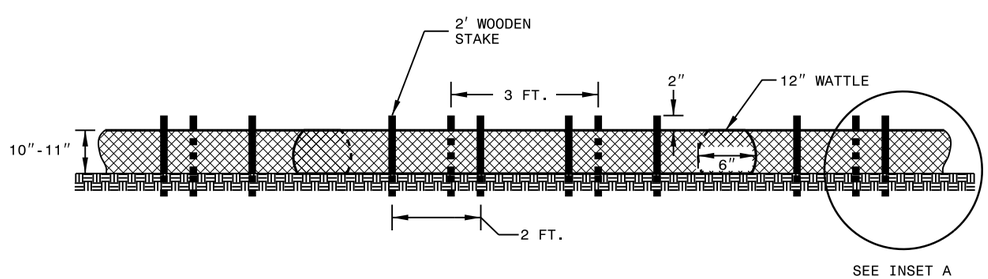

FRONT VIEW

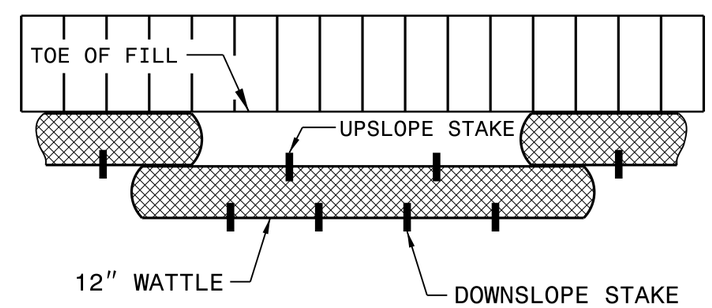

TOP VIEW

PROJECT REFERENCE NO.	SHEET NO.
X-XXXX	EC-2G
R/W SHEET NO.	
ROADWAY DESIGN ENGINEER	HYDRAULICS ENGINEER

COIR FIBER WATTLE DETAIL

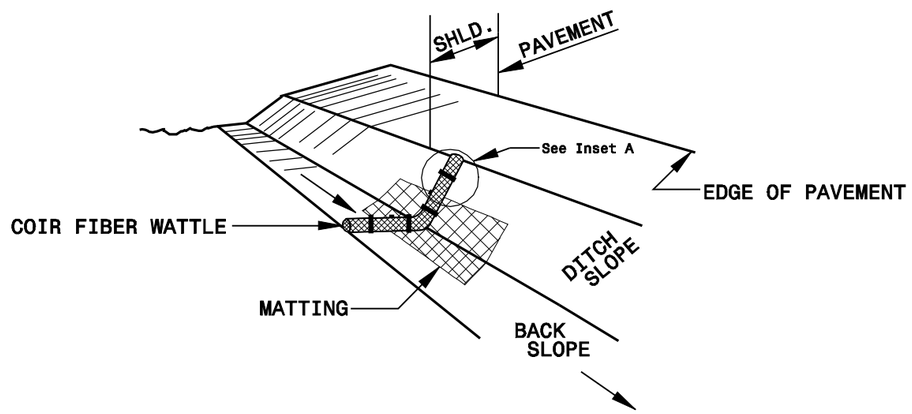

ISOMETRIC VIEW

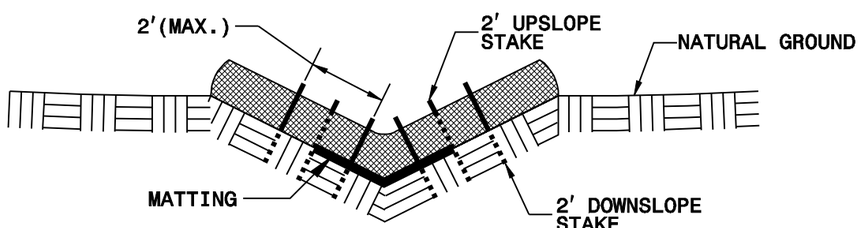

CROSS SECTION VEE DITCH

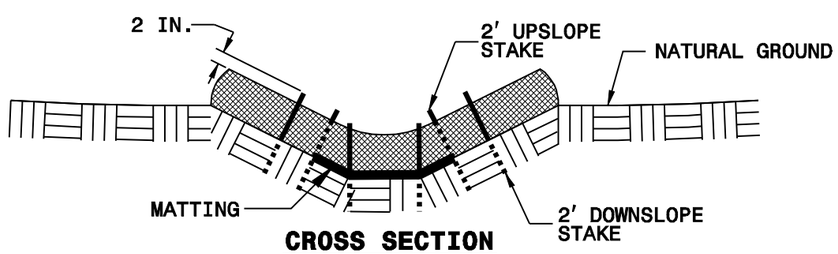

CROSS SECTION TRAPEZOIDAL DITCH

NOTES:

USE MINIMUM 12 IN. DIAMETER COIR FIBER (COCONUT FIBER) WATTLE.

USE 2 FT. WOODEN STAKES WITH A 2 IN. BY 2 IN. NOMINAL CROSS SECTION.

ONLY INSTALL WATTLE(S) TO A HEIGHT IN DITCH SO FLOW WILL NOT WASH AROUND WATTLE AND SCOUR DITCH SLOPES AND AS DIRECTED.

INSTALL A MINIMUM OF 2 UPSLOPE STAKES AND 4 DOWNSLOPE STAKES AT AN ANGLE TO WEDGE WATTLE TO BOTTOM OF DITCH.

PROVIDE STAPLES MADE OF 0.125 IN. DIAMETER STEEL WIRE FORMED INTO A U SHAPE NOT LESS THAN 12" IN LENGTH.

INSTALL STAPLES APPROXIMATELY EVERY 1 LINEAR FOOT ON BOTH SIDES OF WATTLE AND AT EACH END TO SECURE IT TO THE SOIL.

INSTALL MATTING IN ACCORDANCE WITH SECTION 1631 OF THE STANDARD SPECIFICATIONS.

INSET A

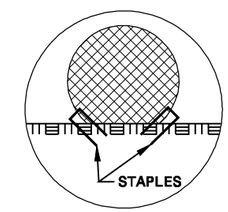

INSET B

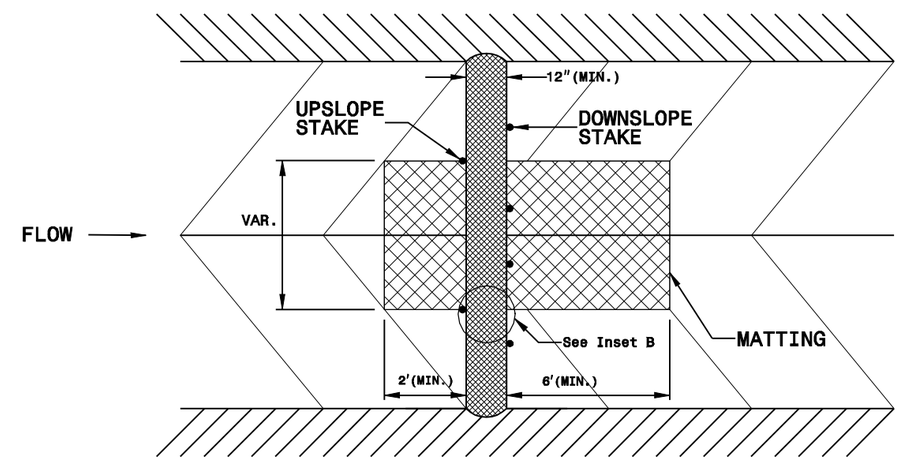

TOP VIEW

SILT FENCE COIR FIBER WATTLE BREAK DETAIL

PROJECT REFERENCE NO.	SHEET NO.
X-XXXX	EC-2G
R/W SHEET NO.	
ROADWAY DESIGN ENGINEER	HYDRAULICS ENGINEER

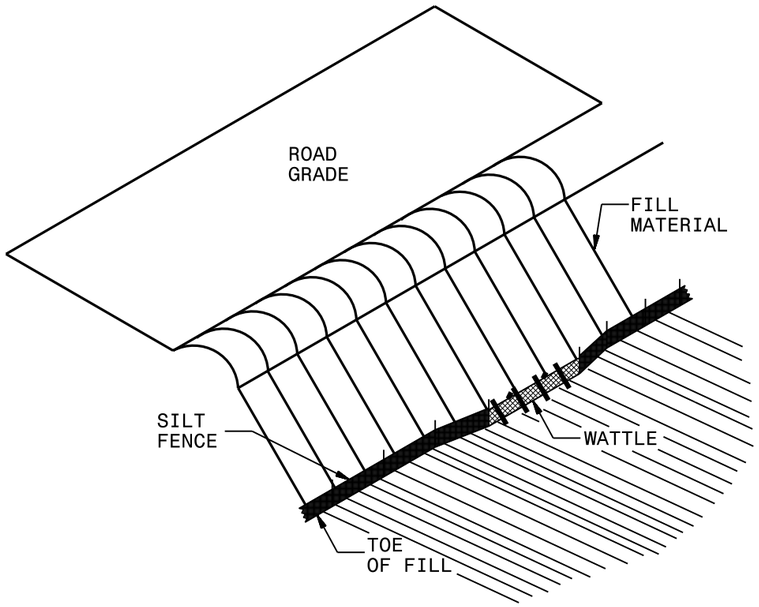

ISOMETRIC VIEW

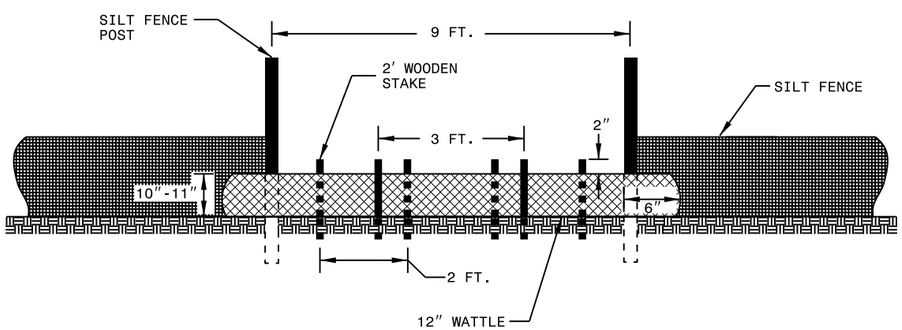

VIEW FROM SLOPE

NOTES:

USE MINIMUM 12 IN. DIAMETER COIR FIBER (COCONUT FIBER) WATTLE AND LENGTH OF 10 FT.

EXCAVATE A 1 TO 2 INCH TRENCH FOR WATTLE TO BE PLACED.

DO NOT PLACE WATTLE ON TOE OF SLOPE.

USE 2 FT. WOODEN STAKES WITH A 2 IN. BY 2 IN. NOMINAL CROSS SECTION.

INSTALL A MINIMUM OF 2 UPSLOPE STAKES AND 4 DOWNSLOPE STAKES AT AN ANGLE TO WEDGE WATTLE TO GROUND.

PROVIDE STAPLES MADE OF 0.125 IN. DIAMETER STEEL WIRE FORMED INTO A U SHAPE NOT LESS THAN 12″ IN LENGTH.

INSTALL STAPLES APPROXIMATELY EVERY 1 LINEAR FOOT ON BOTH SIDES OF WATTLE AND AT EACH END TO SECURE IT TO THE SOIL.

WATTLE INSTALLATION CAN BE ON OUTSIDE OF THE SILT FENCE AS DIRECTED.

INSTALL TEMPORARY SILT FENCE IN ACCORDANCE WITH SECTION 1605 OF THE STANDARD SPECIFICATIONS.

INSET A

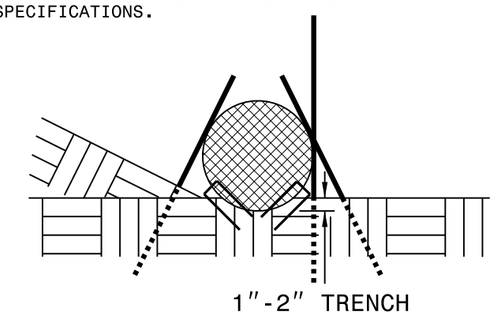

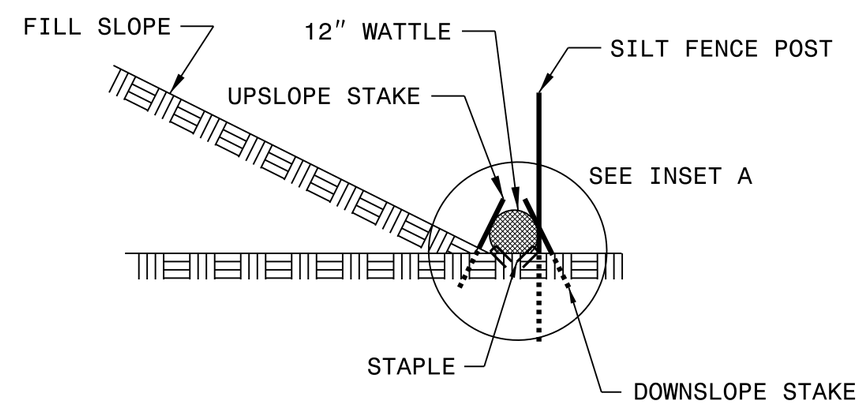

SIDE VIEW