WBS # 17BP.1.R.16

CONTRACT #:

EXIST BRIDGE NO. 360025
24'-0" CLEAR ROADWAY
SPANS: 5@25'
CONC. DECK ON STEEL GIRDERS
CONC. PILINGS W/ CONC. WINGWALLS

REFER TO SPECIAL PROVISIONS FOR THE GALVANIZATION OF STEEL PILES

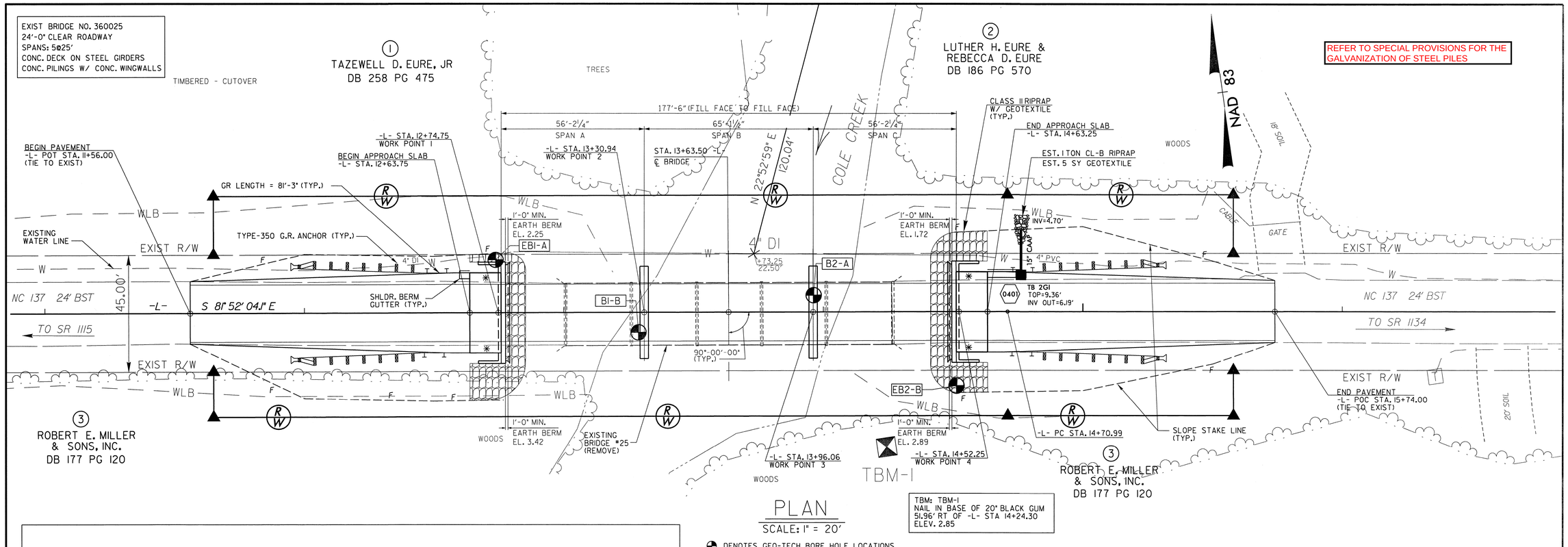

PLAN

SCALE: 1" = 20'

TBM: TBM-1
NAIL IN BASE OF 20" BLACK GUM
51.96' RT OF -L- STA 14+24.30
ELEV. 2.85

DENOTES GEO-TECH BORE HOLE LOCATIONS

✳ DENOTES TYPE III GUARDRAIL CONNECTION REQ'D. SEE "GUARDRAIL ANCHORAGE FOR VERTICAL CONCRETE BARRIER RAIL" SHEET

NOTE: GUARDRAIL LENGTHS AS SHOWN INCLUDE ANCHOR UNITS.

FOR PAVEMENT & R/W LAYOUT SEE "ROADWAY DETAILS" SHEET.

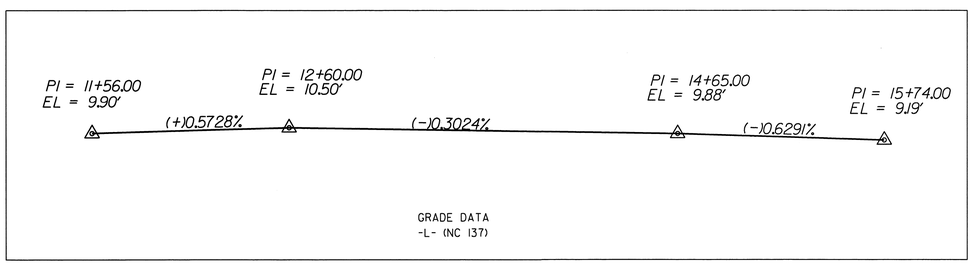

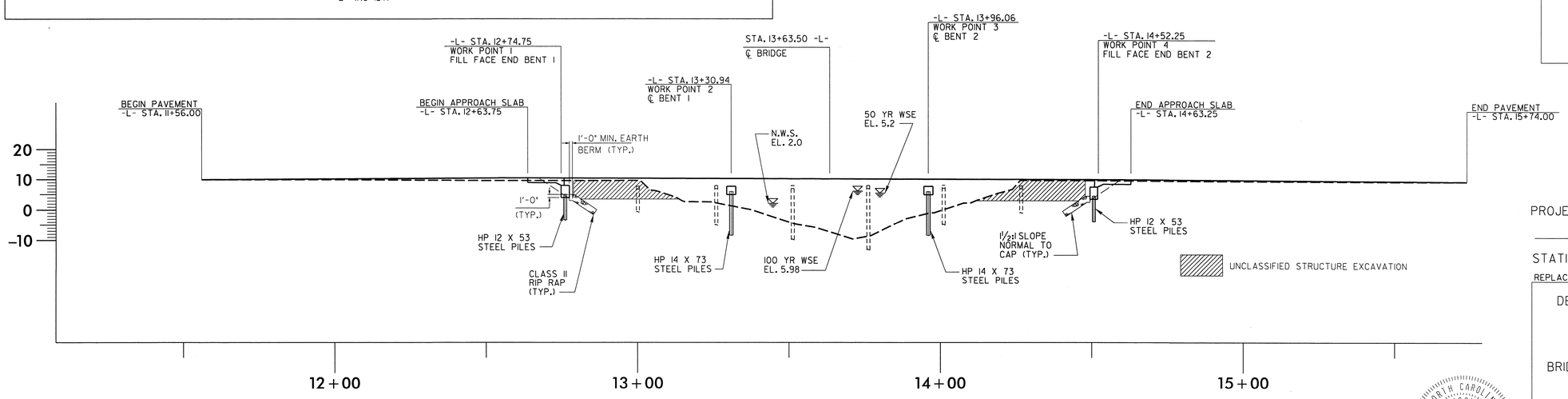

PROFILE ALONG ℄ SURVEY

SCALE: 1" = 20'

I HEREBY CERTIFY THESE PLANS ARE THE AS-BUILT PLANS

Prepared by
URS
URS Corporation - North Carolina
1600 Perimeter Park Drive, Suite 400
Morrisville, NC 27560
PHONE: (919) 461-1100 FAX: (919) 461-1415
NC LIC.# C-2243

PROJECT: 17BP.1.R.16

GATES COUNTY

STATION: 13+63.50 -L-

REPLACES BRIDGE NO. 360025

STATE OF NORTH CAROLINA
DEPARTMENT OF TRANSPORTATION
RALEIGH

BRIDGE ON NC 137 OVER COLE CREEK
BETWEEN SR 1115 AND SR 1134

30'-10" CLEAR ROADWAY - 90° SKEW

NORTH CAROLINA PROFESSIONAL SEAL 040146 ENGINEER DENNIS K. HOYLE 11/2/2012

REVISIONS						
NO.	BY:	DATE:	NO.	BY:	DATE:	
1			1			
2			2			

SHEET NO. 1
TOTAL SHEETS 30

DRAWN BY: LHM DATE: 10/23/12
CHECKED BY: DCS DATE: 10/23/12

BENCHMARK: NAIL IN BASE OF 20"Ø BLACK GUM 14+24.30 -L- 51.96' RIGHT EL. 2.85

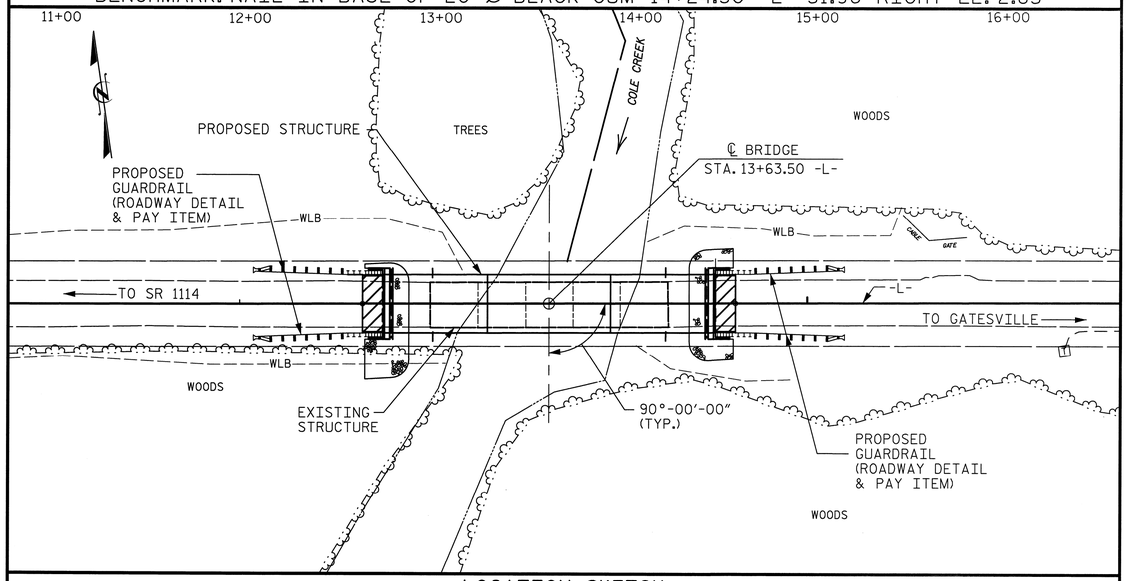

LOCATION SKETCH

HYDRAULIC DATA

DESIGN DISCHARGE = 2920 CFS.
FREQUENCY OF DESIGN FLOOD = 50 YR.
DESIGN HIGH WATER ELEVATION = 5.2 FT.
DRAINAGE AREA = 42.3 SQ. MI.
BASE DISCHARGE (Q100) = 3895 CFS.
BASE HIGH WATER ELEVATION = 5.98 FT.

OVERTOPPING FLOOD DATA

OVERTOPPING DISCHARGE = 5460 CFS
FREQUENCY OF OVERTOPPING FLOOD = > 500 YR.
OVERTOPPING FLOOD ELEVATION = 7.0 FT.

NOTES

ASSUMED LIVE LOAD = HL-93 OR ALTERNATE LOADING.

THIS BRIDGE HAS BEEN DESIGNED IN ACCORDANCE WITH THE AASTHO LRFD BRIDGE DESIGN SPECIFICATIONS.

THIS BRIDGE IS LOCATED IN SEISMIC ZONE 1.

REMOVAL OF THE EXISTING BRIDGE SHALL BE PERFORMED SO AS NOT TO ALLOW DEBRIS TO FALL INTO THE WATER. THE CONTRACTOR SHALL REMOVE THE BRIDGE AND SUBMIT PLANS FOR DEMOLITION IN ACCORDANCE WITH ARTICLE 402-2 OF THE STANDARD SPECIFICATIONS.

THE MATERIAL SHOWN IN THE CROSS-HATCHED AREA SHALL BE EXCAVATED FOR A DISTANCE OF 45 FT. EACH SIDE OF CENTERLINE ROADWAY AS DIRECTED BY THE ENGINEER. THIS WORK WILL BE PAID FOR AT THE CONTRACT LUMP SUM PRICE FOR UNCLASSIFIED STRUCTURE EXCAVATION. SEE SECTION 412 OF THE STANDARD SPECIFICATIONS.

THE SUBSTRUCTURE OF THE EXISTING BRIDGE INDICATED ON THE PLANS IS FROM THE BEST INFORMATION AVAILABLE. SINCE THIS INFORMATION IS SHOWN FOR THE CONVENIENCE OF THE CONTRACTOR, THE CONTRACTOR SHALL HAVE NO CLAIM WHATSOEVER AGAINST THE DEPARTMENT OF TRANSPORTATION FOR ANY DELAYS OR ADDITIONAL COST INCURRED BASED ON DIFFERENCES BETWEEN THE EXISTING BRIDGE SUBSTRUCTURE SHOWN ON THE PLANS AND THE ACTUAL CONDITIONS AT THE PROJECT SITE.

AFTER SERVING AS A TEMPORARY STRUCTURE THE EXISTING STRUCTURE CONSISTING OF 5 @ 25'-0" RC SLAB ON I-BEAM SPANS WITH A CLEAR ROADWAY WIDTH OF 24'-0" SUPPORTED BY RC CAP AND PILE END BENTS AND BENTS AND LOCATED AT THE PROPOSED STRUCTURE SHALL BE REMOVED. THE EXISTING BRIDGE IS PRESENTLY POSTED BELOW THE LEGAL LOAD LIMIT. SHOULD THE STRUCTURAL INTEGRITY OF THE BRIDGE FURTHER DETERIORATE, THIS LOAD LIMITATION MAY BE REDUCED AS FOUND NECESSARY DURING THE LIFE OF THE PROJECT.

INASMUCH AS THE PAINT SYSTEM ON THE EXISTING STRUCTURAL STEEL CONTAINS LEAD, THE CONTRACTOR'S ATTENTION IS DIRECTED TO ARTICLE 107-1 OF THE STANDARD SPECIFICATIONS. ANY COSTS RESULTING FROM COMPLIANCE WITH APPLICABLE STATE OR FEDERAL REGULATIONS PERTAINING TO HANDLING OF MATERIALS CONTAINING LEAD BASED PAINT SHALL BE INCLUDED IN THE BID PRICE FOR "REMOVAL OF EXISTING STRUCTURE AT STATION 13+63.50 -L-."

THIS STRUCTURE HAS BEEN DESIGNED IN ACCORDANCE WITH HEC 18, "EVALUATING SCOUR AT BRIDGES", MAY, 2001.

THIS BRIDGE SHALL BE CONSTRUCTED USING TOP-DOWN CONSTRUCTION METHODS. THE USE OF TEMPORARY CAUSEWAY OR WORK BRIDGE IS NOT PERMITTED.

FOR GROUT FOR STRUCTURES, SEE SPECIAL PROVISIONS.

FOR CRANE SAFETY, SEE SPECIAL PROVISIONS.

FOR FALSEWORK AND FORMWORK, SEE SPECIAL PROVISIONS.

FOR OTHER DESIGN DATA AND GENERAL NOTES, SEE SHEET SN.

FOR SUBMITTAL OF WORKING DRAWINGS, SEE SPECIAL PROVISIONS.

FOR EROSION CONTROL MEASURES SEE EROSION CONTROL PLANS.

FOUNDATION NOTES

PILES AT END BENTS 1 AND 2 ARE DESIGNED FOR A FACTORED RESISTANCE OF 75 TONS PER PILE.

PILES AT BENTS 1 AND 2 ARE DESIGNED FOR A FACTORED RESISTANCE OF 125 TONS PER PILE.

DRIVE PILES AT END BENTS 1 AND 2 TO A REQUIRED DRIVING RESISTANCE OF 125 TONS PER PILE.

DRIVE PILES AT BENTS 1 AND 2 TO A REQUIRED DRIVING RESISTANCE OF 220 TONS PER PILE. THIS REQUIRED DRIVING RESISTANCE INCLUDES ADDITIONAL RESISTANCE FOR DOWNDRAG OR SCOUR.

INSTALL PILES AT BENTS 1 AND 2 TO A TIP ELEVATION NO HIGHER THAN -31 FT.

THE SCOUR CRITICAL ELEVATIONS FOR BENTS 1 AND 2 ARE -10 FT AND -12 FT, RESPECTIVELY. SCOUR CRITICAL ELEVATIONS ARE USED TO MONITOR POSSIBLE SCOUR PROBLEMS DURING THE LIFE OF THE STRUCTURE.

IT HAS BEEN ESTIMATED THAT A HAMMER WITH AN EQUIVALENT RATED ENERGY IN THE RANGE OF 20 TO 30 FT-KIPS PER BLOW WILL BE REQUIRED TO DRIVE PILES AT END BENTS 1 AND 2. THE ESTIMATED ENERGY RANGE DOES NOT RELEASE THE CONTRACTOR FROM PROVIDING DRIVING EQUIPMENT IN ACCORDANCE WITH SUB ARTICLE 450-3(D)(2) OF THE STANDARD SPECIFICATIONS.

IT HAS BEEN ESTIMATED THAT A HAMMER WITH AN EQUIVALENT RATED ENERGY IN THE RANGE OF 100 TO 110 FT-KIPS PER BLOW WILL BE REQUIRED TO DRIVE PILES AT BENTS 1 AND 2. THE ESTIMATED ENERGY RANGE DOES NOT RELEASE THE CONTRACTOR FROM PROVIDING DRIVING EQUIPMENT IN ACCORDANCE WITH SUB ARTICLE 450-3(D)(2) OF THE STANDARD SPECIFICATIONS.

TESTING PILES WITH THE PDA DURING DRIVING, RESTRIKING OR REDRIVING MAY BE REQUIRED. THE ENGINEER WILL DETERMINE THE NEED FOR PDA TESTING. FOR PDA TESTING, SEE SECTION 450 OF THE STANDARD SPECIFICATIONS (AND FOR PILE DRIVING CRITERIA, SEE PILE DRIVING CRITERIA PROVISION).

FOR PILES, SEE SECTION 450 OF THE STANDARD SPECIFICATIONS.

TOTAL BILL OF MATERIAL

	REMOVAL OF EXISTING STRUCTURE AT STA 13+63.50 -L-	UNCLASSIFIED STRUCTURE EXCAVATION	BRIDGE APPROACH SLABS	HP 12 X 53 GALVANIZED STEEL PILES		▲HP 14 X 73 GALVANIZED STEEL PILES		RIP RAP CLASS II (2'-0" THICK)	GEOTEXTILE FOR DRAINAGE	CONSTRUCTION OF SUBSTRUCTURE	CONSTRUCTION OF SUPERSTRUCTURE
	LUMP SUM	LUMP SUM	LUMP SUM	NO.	LIN. FT.	NO.	LIN. FT.	TONS	SQ. YARDS	LUMP SUM	LUMP SUM
SUPERSTRUCTURE											
END BENT 1				7	525			115	128		
BENT 1						8	840				
BENT 2						8	800				
END BENT 2				7	560			109	121		
TOTAL	LUMP SUM	LUMP SUM	LUMP SUM	14	1085	16	1640	224	249	LUMP SUM	LUMP SUM

▲ FOR BENTS 1 AND 2, ONLY PARTIAL GALVANIZING OF THE PILES IS REQUIRED. SEE INTERIOR BENT SHEETS FOR REQUIRED GALVANIZED LENGTHS. PAYMENT FOR PARTIALLY GALVANIZED PILES WILL BE MADE UNDER THE CONTRACT UNIT PRICE FOR GALVANIZED STEEL PILES.

Prepared by
URS
URS Corporation - North Carolina
1600 Perimeter Park Drive, Suite 400
Morrisville, NC 27560
PHONE: (919) 461-1100 FAX: (919) 461-1415
NC LIC. # C-2243

NORTH CAROLINA PROFESSIONAL SEAL 5953 ENGINEER J. CARLDON HALL, JR.
10/31/12

PROJECT NO. 17BP.1.R.16
GATES COUNTY
STATION: 13+63.50-L-

SHEET 2 OF 2 REPLACES BRIDGE NO. 25

STATE OF NORTH CAROLINA
DEPARTMENT OF TRANSPORTATION
RALEIGH

GENERAL DRAWING FOR BRIDGE ON NC 137 OVER COLE CREEK

30'-10" CLEAR ROADWAY - 90° SKEW

REVISIONS						SHEET NO.
NO.	BY:	DATE:	NO.	BY:	DATE:	2
1			3			TOTAL SHEETS
2			4			30

DRAWN BY : K.H. COMPTON DATE : 8/14/12
CHECKED BY : R.L. WHITCHER DATE : 8/21/12

10/31/2012
P:\Jobs1\Group A Bridge Replacements\Gates Bridge 025\Structures\FinalDrawings\360025_SD_GD2.dgn
kyle.compton

LOAD AND RESISTANCE FACTOR RATING (LRFD) SUMMARY FOR PRESTRESSED CONCRETE GIRDERS

LEVEL		VEHICLE	WEIGHT (W) (TONS)	CONTROLLING LOAD RATING	MINIMUM RATING FACTORS (RF)	TONS = W X RF	STRENGTH I LIMIT STATE											SERVICE III LIMIT STATE						COMMENT NUMBER
								MOMENT					SHEAR						MOMENT					
							LIVELOAD FACTORS	DISTRIBUTION FACTORS (DF)	RATING FACTOR	SPAN	GIRDER LOCATION	DISTANCE FROM LEFT END OF SPAN (ft)	DISTRIBUTION FACTORS (DF)	RATING FACTOR	SPAN	GIRDER LOCATION	DISTANCE FROM LEFT END OF SPAN (ft)	LIVELOAD FACTORS	DISTRIBUTION FACTORS (DF)	RATING FACTOR	SPAN	GIRDER LOCATION	DISTANCE FROM LEFT END OF SPAN (ft)	
DESIGN LOAD RATING		HL-93(Inv)	N/A	**1**	1.018	--	1.75	0.274	1.05	65'	EL	32	0.513	1.2	65'	EL	6.4	0.80	0.274	**1.02**	65'	EL	**32**	
		HL-93(Opr)	N/A	--	1.358	--	1.35	0.274	1.36	65'	EL	32	0.513	1.56	65'	EL	6.4	N/A	--	--	--	--	--	
		HS-20(Inv)	36.000	**2**	1.306	47.014	1.75	0.274	1.34	65'	EL	32	0.513	1.48	65'	EL	6.4	0.80	0.274	**1.31**	65'	EL	**32**	
		HS-20(Opr)	36.000	--	1.742	62.706	1.35	0.274	1.74	65'	EL	32	0.513	1.92	65'	EL	6.4	N/A	--	--	--	--	--	
LEGAL LOAD RATING	SV	SNSH	13.500	--	2.868	38.725	1.4	0.274	3.69	65'	EL	32	0.513	4.33	65'	EL	6.4	0.80	0.274	2.87	65'	EL	32	
		SNGARBS2	20.000	--	2.171	43.424	1.4	0.274	2.79	65'	EL	32	0.513	3.11	65'	EL	6.4	0.80	0.274	2.17	65'	EL	32	
		SNAGRIS2	22.000	--	2.071	45.552	1.4	0.274	2.66	65'	EL	32	0.513	2.89	65'	EL	6.4	0.80	0.274	2.07	65'	EL	32	
		SNCOTTS3	27.250	--	1.428	38.924	1.4	0.274	1.84	65'	EL	32	0.513	2.17	65'	EL	6.4	0.80	0.274	1.43	65'	EL	32	
		SNAGGRS4	34.925	--	1.206	42.136	1.4	0.274	1.55	65'	EL	32	0.513	1.81	65'	EL	6.4	0.80	0.274	1.21	65'	EL	32	
		SNS5A	35.550	--	1.179	41.911	1.4	0.274	1.52	65'	EL	32	0.513	1.85	65'	EL	6.4	0.80	0.274	1.18	65'	EL	32	
		SNS6A	39.950	--	1.087	43.43	1.4	0.274	1.4	65'	EL	32	0.513	1.69	65'	EL	6.4	0.80	0.274	1.09	65'	EL	32	
		SNS7B	42.000	--	1.035	43.489	1.4	0.274	1.33	65'	EL	32	0.513	1.67	65'	EL	6.4	0.80	0.274	1.04	65'	EL	32	
	TTST	TNAGRIT3	33.000	--	1.327	43.8	1.4	0.274	1.71	65'	EL	32	0.513	2.01	65'	EL	6.4	0.80	0.274	1.33	65'	EL	32	
		TNT4A	33.075	--	1.335	44.142	1.4	0.274	1.72	65'	EL	32	0.513	1.95	65'	EL	6.4	0.80	0.274	1.33	65'	EL	32	
		TNT6A	41.600	--	1.096	45.613	1.4	0.274	1.41	65'	EL	32	0.513	1.8	65'	EL	6.4	0.80	0.274	1.10	65'	EL	32	
		TNT7A	42.000	--	1.105	46.4	1.4	0.274	1.42	65'	EL	32	0.513	1.74	65'	EL	6.4	0.80	0.274	1.10	65'	EL	32	
		TNT7B	42.000	--	1.15	48.298	1.4	0.274	1.48	65'	EL	32	0.513	1.62	65'	EL	6.4	0.80	0.274	1.15	65'	EL	32	
		TNAGRIT4	43.000	--	1.089	46.815	1.4	0.274	1.4	65'	EL	32	0.513	1.57	65'	EL	6.4	0.80	0.274	1.09	65'	EL	32	
		TNAGT5A	45.000	--	1.024	46.084	1.4	0.274	1.32	65'	EL	32	0.513	1.57	65'	EL	6.4	0.80	0.274	1.02	65'	EL	32	
		TNAGT5B	45.000	**3**	1.01	45.431	1.4	0.274	1.3	65'	EL	32	0.513	1.49	65'	EL	6.4	0.80	0.274	**1.01**	65'	EL	**32**	

LOAD FACTORS:

DESIGN LOAD RATING FACTORS	LIMIT STATE	γ_{DC}	γ_{DW}
	STRENGTH I	1.25	1.50
	SERVICE III	1.00	1.00

NOTES:

MINIMUM RATING FACTORS ARE BASED ON THE STRENGTH I AND SERVICE III LIMIT STATES.

ALLOWABLE STRESSES FOR SERVICE III LIMIT STATE ARE AS REQUIRED FOR DESIGN.

COMMENTS:

1.
2.
3.
4.

CONTROLLING LOAD RATING
1 DESIGN LOAD RATING (HL-93)
2 DESIGN LOAD RATING (HS-20)
3 LEGAL LOAD RATING **
** SEE CHART FOR VEHICLE TYPE

GIRDER LOCATION

I - INTERIOR GIRDER
EL - EXTERIOR LEFT GIRDER
ER - EXTERIOR RIGHT GIRDER

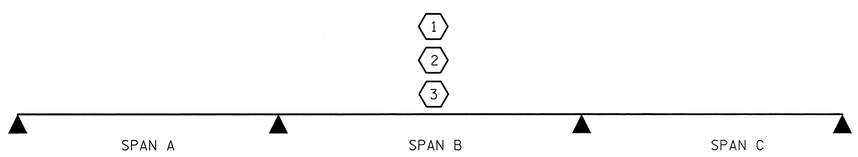

LRFR SUMMARY

PROJECT NO. 17BP.1.R.16
GATES COUNTY
STATION: 13+63.50 -L-

Prepared by
URS
URS Corporation - North Carolina
1600 Perimeter Park Drive, Suite 400
Morrisville, NC 27560
PHONE: (919) 461-1100 FAX: (919) 461-1415
NC LIC. # C-2243

NORTH CAROLINA PROFESSIONAL SEAL C-2243 5953 ENGINEER CARLDON HALL, JR. 10/31/12

STATE OF NORTH CAROLINA
DEPARTMENT OF TRANSPORTATION
RALEIGH

STANDARD
LRFR SUMMARY FOR 65' CORED SLAB UNIT 90° SKEW
(NON-INTERSTATE TRAFFIC)

REVISIONS						SHEET NO.
NO.	BY:	DATE:	NO.	BY:	DATE:	3
1			3			TOTAL SHEETS
2			4			30

ASSEMBLED BY : K.H. COMPTON DATE : 8/14/12
CHECKED BY : R.L. WHITCHER DATE : 8/22/12
DRAWN BY : CVC 6/10
CHECKED BY : DNS 6/10

10/31/2012
P:\Jobs1\Group A Bridge Replacements\Gates Bridge 025\Structures\FinalDrawings\360025_SD_LRFR.dgn
kyle.compton

STD. NO. 24LRFR1_90S_65L

WBS # 17BP.1.R.16

CONTRACT #:

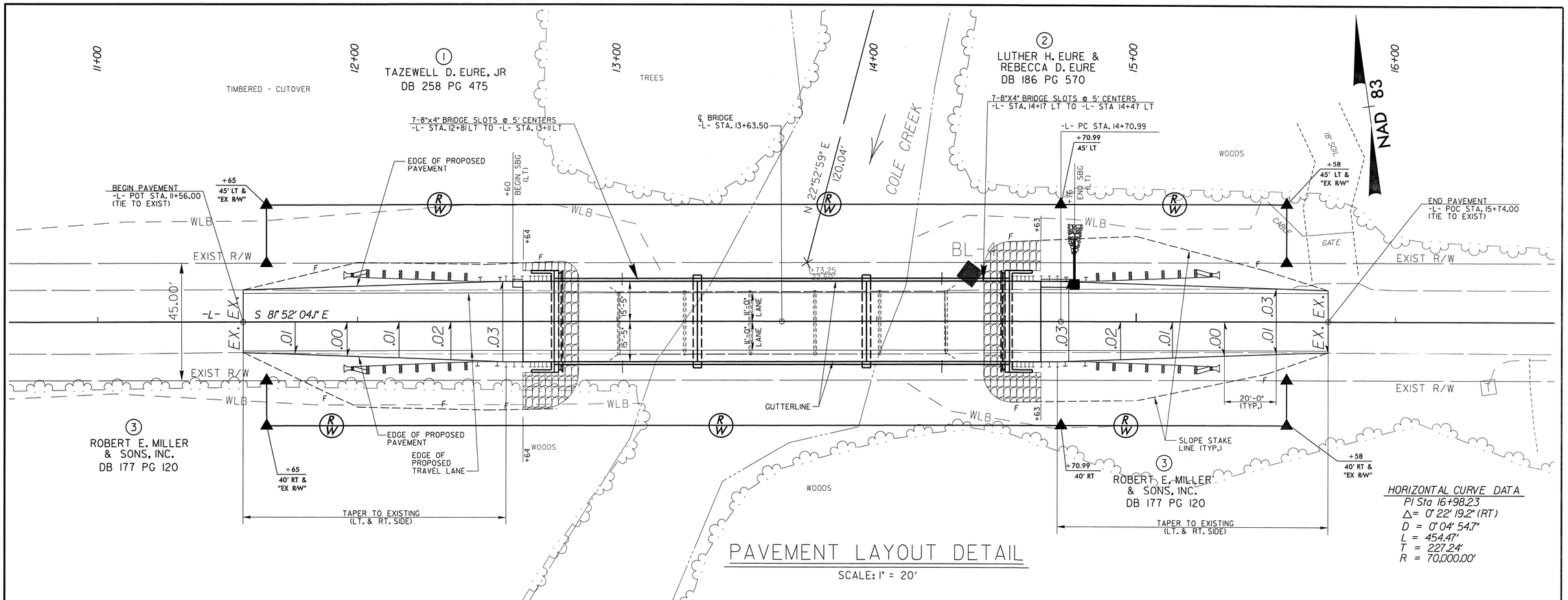

PAVEMENT LAYOUT DETAIL

SCALE: 1" = 20'

HORIZONTAL CURVE DATA

PI Sta 16+98.23
Δ = 0° 22' 19.2" (RT)
D = 0° 04' 54.7"
L = 454.47'
T = 227.24'
R = 70,000.00'

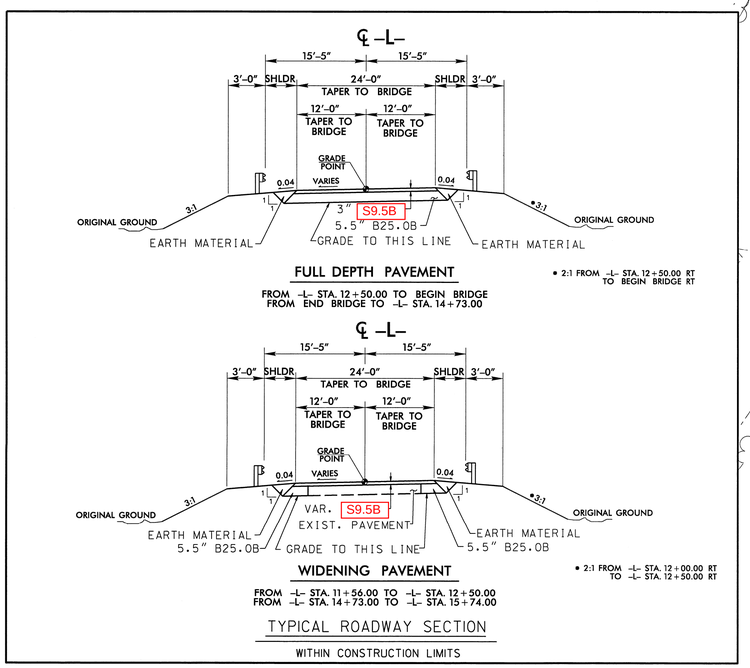

TYPICAL ROADWAY SECTION

WITHIN CONSTRUCTION LIMITS

DRAWN BY:	LHM	DATE:	10/23/12
CHECKED BY:	DCS	DATE:	10/23/12

RIGHT OF WAY AREA DATA

PARCEL NO.	PROPERTY OWNERS NAMES	TOTAL AREA	AREA TAKEN	AREA REMAINING RT.	AREA REMAINING LT.	CONST. EASE.	PERM. DRAIN. EASE.	TEMP. DRAIN. EASE.
1	TAZEWELL D. EURE, JR	269.900 acres	0.109 acres		269.791 acres			
2	LUTHER H. EURE & REBECCA D. EURE	100.000 acres	0.094 acres		99.906 acres			
3	ROBERT E. MILLER & SONS, INC.	134.640 acres	0.158 acres	134.482 acres				

DATUM DESCRIPTION

THE LOCALIZED COORDINATE SYSTEM DEVELOPED FOR THIS PROJECT IS BASED ON THE STATE PLANE COORDINATES ESTABLISHED BY JOYNER KEENY FOR MONUMENT "BL-4" WITH NAD 83/CORS 96 STATE PLANE GRID COORDINATES OF NORTHING: 974916.39(ft) EASTING: 2652119.06(ft)
ELEVATION: 7.92(ft)
THE AVERAGE COMBINED GRID FACTOR USED ON THIS PROJECT (GROUND TO GRID) IS: 1.000081761
ALL LINEAR DIMENSIONS ARE LOCALIZED HORIZONTAL DISTANCES
VERTICAL DATUM USED IS NAVD 88

Prepared by
URS
URS Corporation - North Carolina
1600 Perimeter Park Drive, Suite 400
Morrisville, NC 27560
PHONE: (919) 461-1100 FAX: (919) 461-1415
NC LIC.# C-2243

PROJECT: 17BP.1.R.16

GATES COUNTY

STATION: 13+63.50 -L-

REPLACES BRIDGE NO. 360025

STATE OF NORTH CAROLINA
DEPARTMENT OF TRANSPORTATION
RALEIGH

ROADWAY DETAILS

30'-10" CLEAR ROADWAY - 90° SKEW

NORTH CAROLINA PROFESSIONAL SEAL 040146 ENGINEER DENNIS K. HOYLE
Dennis K. Hoyle 11/13/2012

REVISIONS						SHEET NO.
NO.	BY:	DATE:	NO.	BY:	DATE:	4
1			1			TOTAL SHEETS
2			2			30

TRAFFIC MANAGEMENT FOR TEMPORARY ROAD CLOSURE

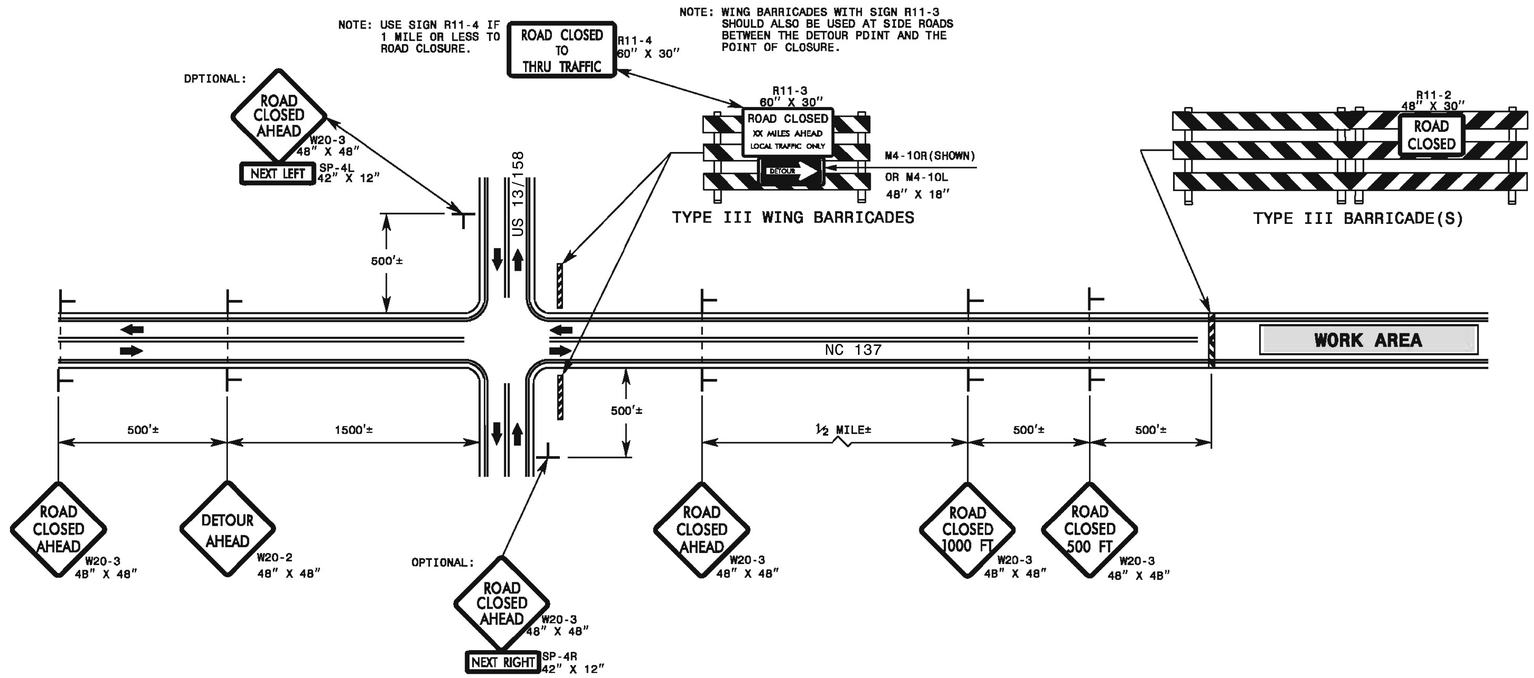

LEGEND

DIRECTION OF TRAFFIC FLOW

STATIONARY SIGN

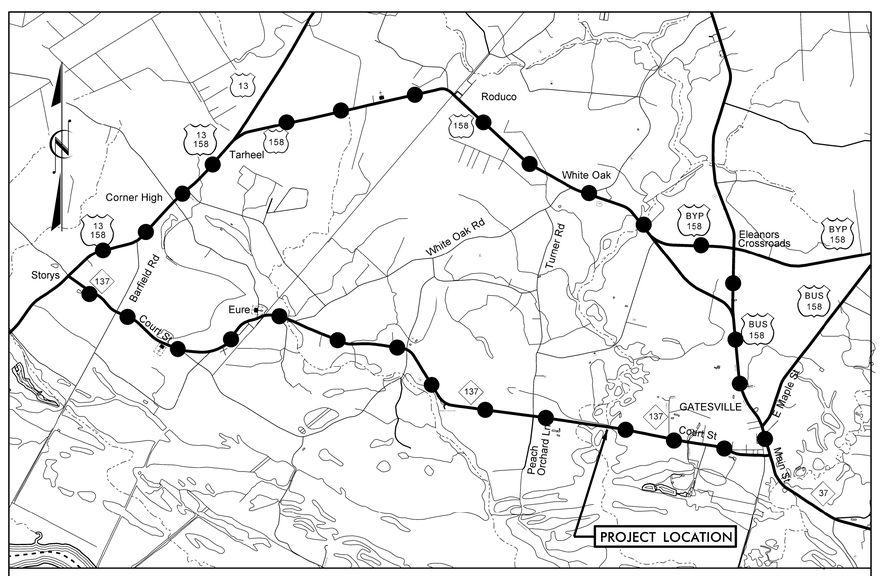

VICINITY MAP
(NOT TO SCALE)

DETOUR ROUTE

GENERAL NOTES

1- IF NECESSARY USE THIS STD. FOR TWO-LANE, TWO-WAY, AND MULTILANE DIVIDED AND UNDIVIDED ROADWAYS.

2- INSTALLATION OF DETOUR ROUTING PANELS, TEMPORARY ROUTE MARKERS, DESTINATION SIGNS, AND ANY NECESSARY MODIFICATIONS TO EXISTING OR PROPOSED REGULATORY OR WARNING SIGNS WILL BE MADE BY OTHERS (STATE OR CITY FORCES) UNLESS OTHERWISE DESIGNATED IN THE PLANS. PROVIDE A MINIMUM 21 CALENDAR AY NOTICE TO STATE FORCES BEFORE A ROADWAY IS CLOSED TO TRAFFIC SUCH THAT THE NECESSARY PROVISIONS CAN BE MADE TO INSTALL DETOUR ROUTE SIGNS, INFORM LOCAL EMERGENCY AND LAW ENFORCEMENT PERSONNEL, SCHOOLS, OR ANY OTHER PARTIES AFFECTED BY THE ROAD CLOSURE.

3- INSTALL SIGNS BEFORE THE BARRICADES WHEN CLOSING THE ROADWAY TO TRAFFIC. REMOVE BARRICADES BEFORE SIGNS WHEN OPENING THE ROADWAY TO TRAFFIC. INSTALL/REMOVE SIGNS AND BARRICADES WITHIN THE SAME CALENDAR DAY.

4- USE ADDITIONAL TYPE III BARRICADES IN STAGGERED LOCATIONS SUPPLEMENTED WITH SIGN R11-4 "ROAD CLOSED TO THRU TRAFFIC" IN THE EVENT THAT TRAFFIC MUST BE MAINTAINED BEYOND THE DETOUR POINT.

5- DO NOT DISPLAY FRACTIONS OR DECIMALS ON SIGN R11-3 "ROAD CLOSED XX MILES AHEAD".

6- POSITION WING BARRICADES ON THE SHOULDERS AND SLOPE THE STRIPES DOWNWARD IN THE DIRECTION TOWARD WHICH TRAFFIC MUST TURN IN DETOURING.

7- USE PORTABLE SIGNS IF ROAD CLOSURE IS TO BE IMPLEMENTED FOR LESS THAN ONE DAY OR FOR EMERGENCIES.

PROJECT: 17BP.1.R.16

GATES COUNTY

STATION: 13+63.50 -L-

REPLACES BRIDGE NO. 360025

STATE OF NORTH CAROLINA
DEPARTMENT OF TRANSPORTATION
RALEIGH

TRAFFIC MANAGEMENT PLAN

30'-10" CLEAR ROADWAY - 90° SKEW

Prepared by
URS
URS Corporation - North Carolina
1600 Perimeter Park Drive, Suite 400
Morrisville, NC 27560
PHONE: (919) 461-1100 FAX: (919) 461-1415
NC LIC.# C-2243

NORTH CAROLINA PROFESSIONAL SEAL 18122 ENGINEER JEFFREY A. KOONTZ 11-5-12

REVISIONS							SHEET NO.
NO.	BY:	DATE:	NO.	BY:	DATE:		5
1			1				TOTAL SHEETS
2			2				30

DRAWN BY: LHM DATE: 10/03/12
CHECKED BY: JAK DATE: 10/03/12

WBS # 17BP.1.R.16

CONTRACT #:

WBS # 17BP.1.R.16

CONTRACT #:

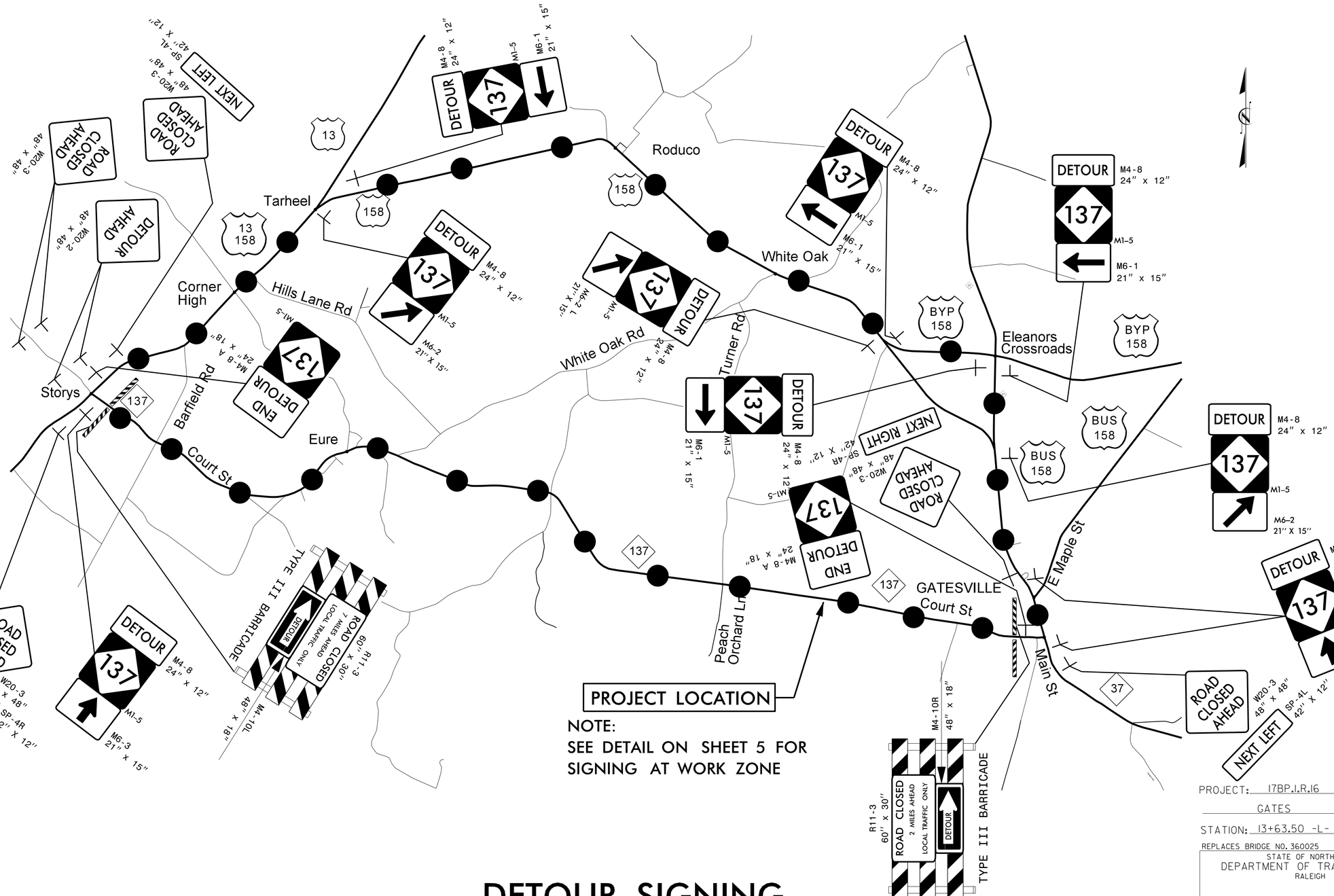

NOTE:
SEE DETAIL ON SHEET 5 FOR SIGNING AT WORK ZONE

DETOUR SIGNING
(NOT TO SCALE)

DETOUR ROUTE

PROJECT: 17BP.1.R.16

GATES COUNTY

STATION: 13+63.50 -L-

REPLACES BRIDGE NO. 360025

STATE OF NORTH CAROLINA
DEPARTMENT OF TRANSPORTATION
RALEIGH

TRAFFIC MANAGEMENT PLAN

30'-10" CLEAR ROADWAY - 90° SKEW

Prepared by
URS
URS Corporation - North Carolina
1600 Perimeter Park Drive, Suite 400
Morrisville, NC 27560
PHONE: (919) 461-1100 FAX: (919) 461-1415
NC LIC.# C-2243

NORTH CAROLINA PROFESSIONAL SEAL 18122 ENGINEER JEFFREY A. KOONTZ 11-5-12

REVISIONS						SHEET NO. 6
NO.	BY:	DATE:	NO.	BY:	DATE:	TOTAL SHEETS 30
1			1			
2			2			

DRAWN BY: LHM DATE: 10/03/12
CHECKED BY: JAK DATE: 10/03/12

8/23/99

0 2.5 5	PROJ. REFERENCE NO.	SHEET NO.
	17BP.1.R.16	7

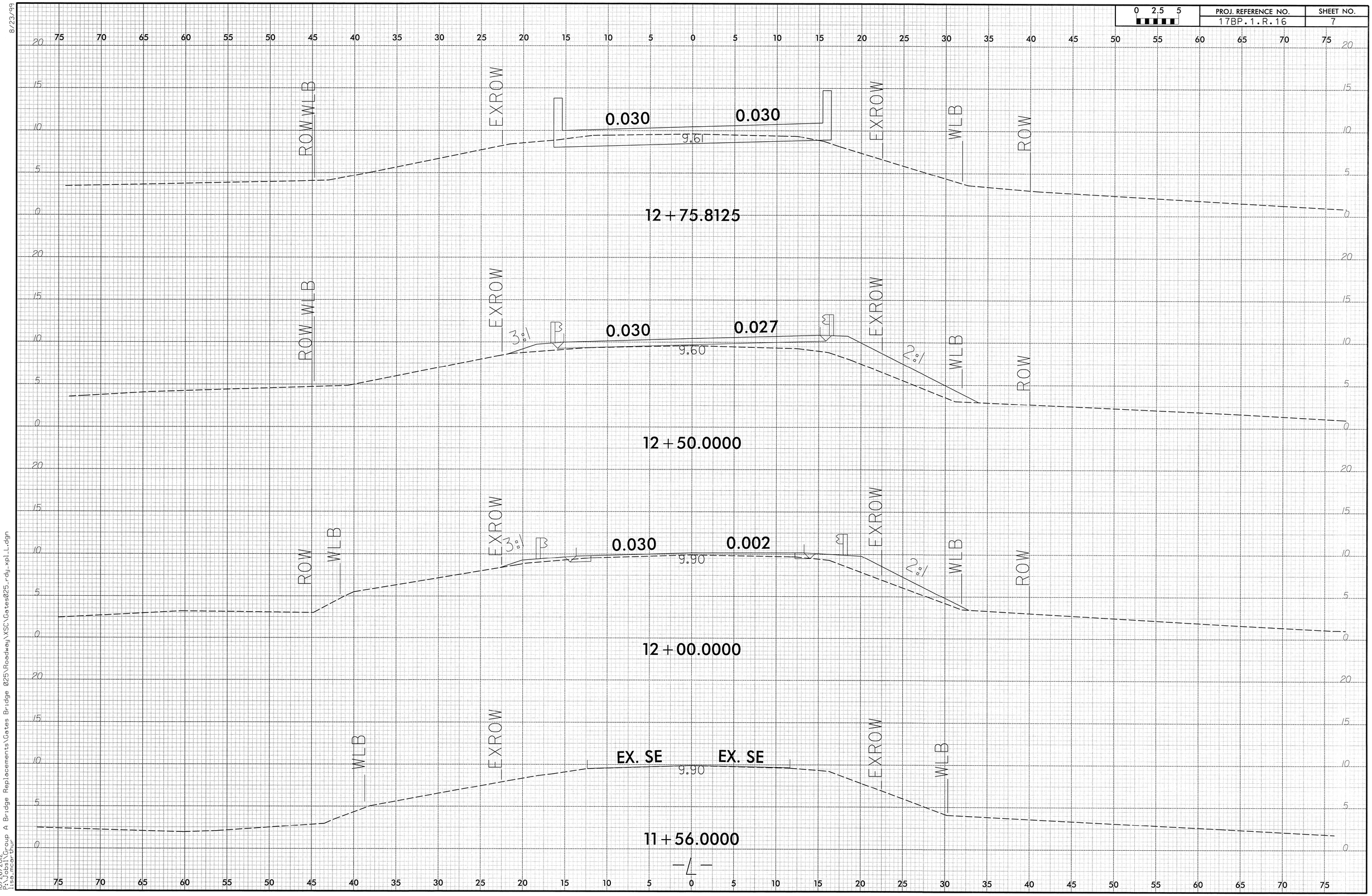

10/26/2012
P:\Jobs\Group A Bridge Replacements\Gates Bridge 025\Roadway\XSC\Gates025_rdy_xpl_L.dgn
lisa_mcarthur

0 2.5 5	PROJ. REFERENCE NO.	SHEET NO.
	17BP.1.R.16	8

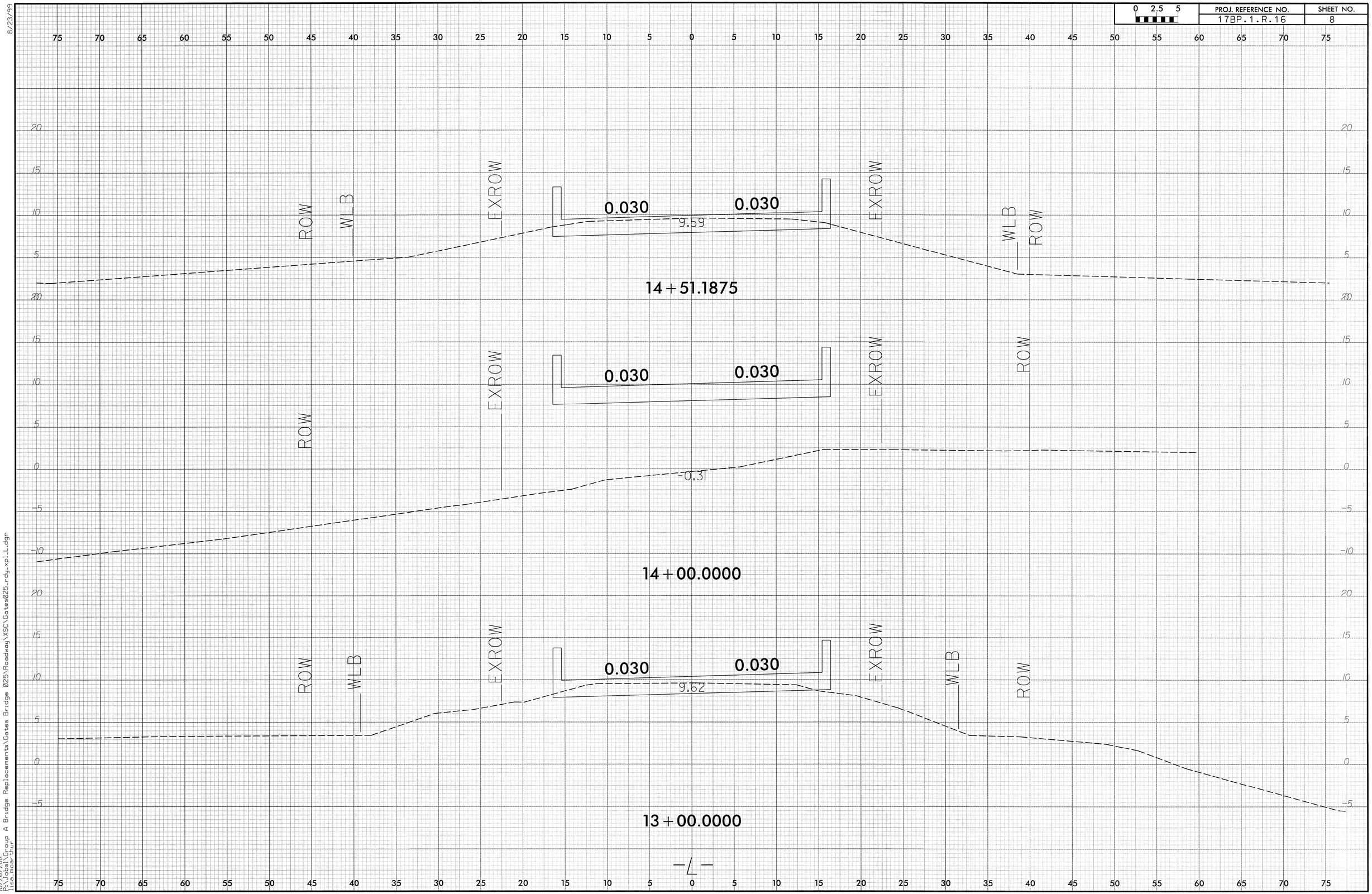

8/23/99
10/26/2012
P:\Jobs\Group A Bridge Replacements\Gates Bridge 025\Roadway\XSC\Gates025_rdy_xpi_L.dgn
lisa.mcarthur

8/23/99

0 2.5 5	PROJ. REFERENCE NO.	SHEET NO.
	17BP.1.R.16	9

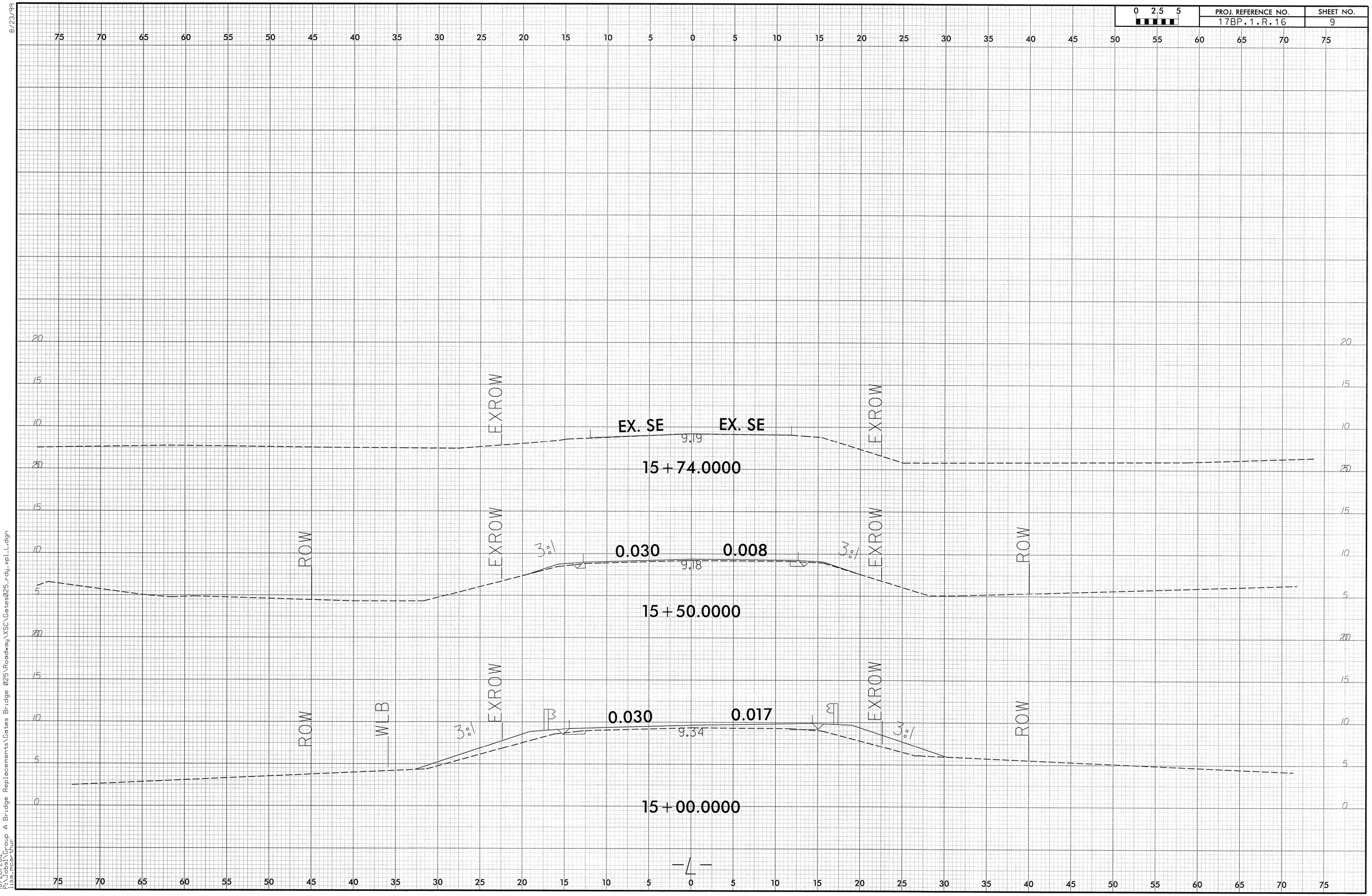

10/26/2012
P:\Jobs\Group A Bridge Replacements\Gates Bridge 025\Roadway\XSC\Gates025_rdy_xpl_L.dgn
lisa.mcarthur

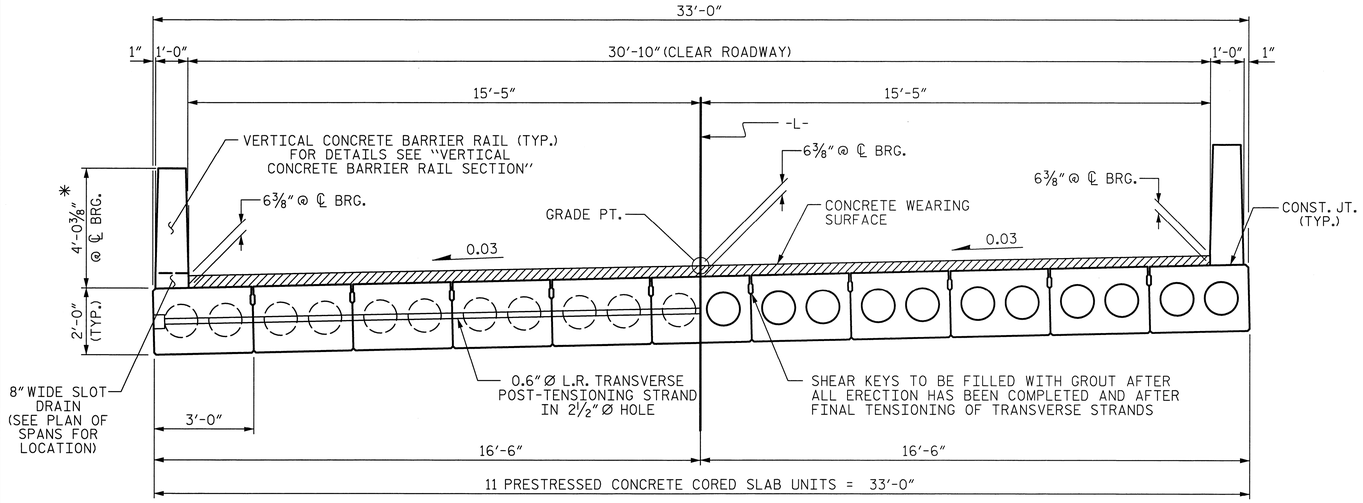

HALF SECTION
AT INTERMEDIATE DIAPHRAGMS

TYPICAL SECTION

HALF SECTION
THROUGH VOIDS

✱ - THE MAXIMUM BARRIER RAIL HEIGHT IS SHOWN. THE HEIGHT OF THE BARRIER RAIL AND CONCRETE OVERLAY THICKNESS VARIES WHILE THE TOP OF THE BARRIER RAIL FOLLOWS THE PROFILE OF THE GUTTERLINE. FOR RAIL HEIGHT DETAILS AND CONCRETE OVERLAY THICKNESS, SEE THE "VERTICAL CONCRETE BARRIER RAIL SECTION" DETAIL.

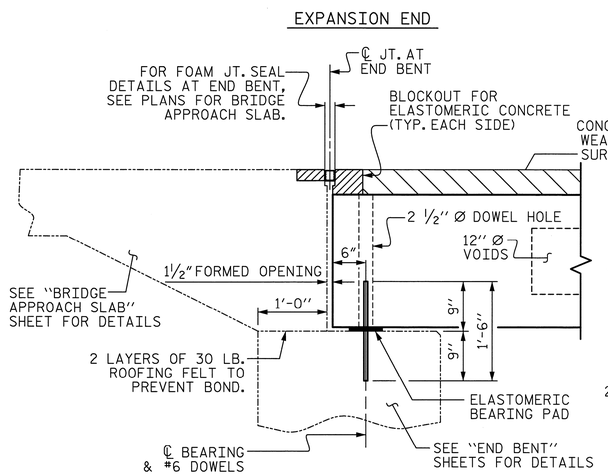

SECTION AT END BENT

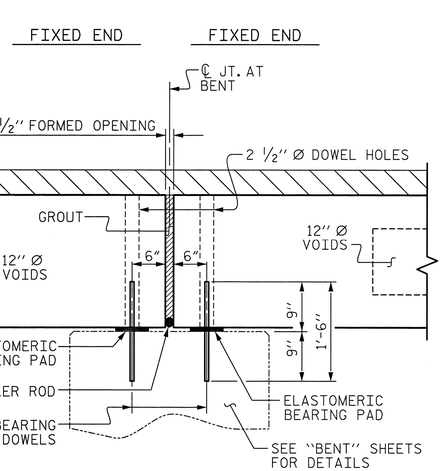

SECTION AT BENT

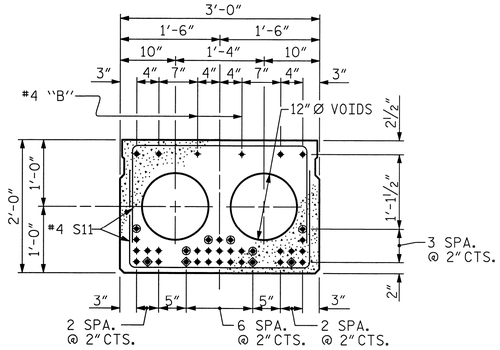

INTERIOR SLAB SECTION (55' UNIT)

(THIS UNIT IS DESIGNED FOR TOP DOWN CONSTRUCTION)
(31 STRANDS REQUIRED)

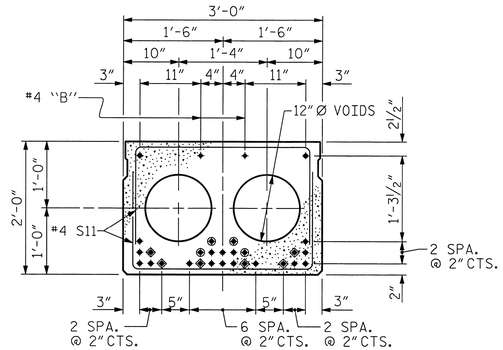

INTERIOR SLAB SECTION (65' UNIT)

(THIS UNIT IS NOT DESIGNED FOR TOP DOWN CONSTRUCTION)
(24 STRANDS REQUIRED)

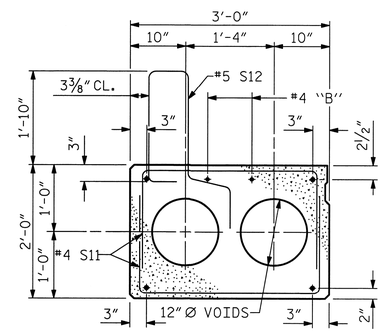

EXTERIOR SLAB SECTION

(FOR PRESTRESSED STRAND LAYOUT, SEE INTERIOR SLAB SECTION.)

0.6" Ø LOW RELAXATION STRAND LAYOUT

◈ BOND SHALL BE BROKEN ON THESE STRANDS FOR A DISTANCE OF 12'-0" FROM END OF CORED SLAB UNIT. SEE STANDARD SPECIFICATIONS, ARTICLE 1078-7.

◉ OPTIONAL FULL LENGTH DEBONDED STRANDS. THESE STRANDS ARE NOT REQUIRED. IF THE FABRICATOR CHOOSES TO INCLUDE THESE STRANDS IN THE CORED SLAB UNIT, THE STRANDS SHALL BE DEBONDED FOR THE FULL LENGTH OF THE UNIT AT NO ADDITIONAL COST. SEE STANDARD SPECIFICATIONS, ARTICLE 1078-7.

DEBONDING LEGEND

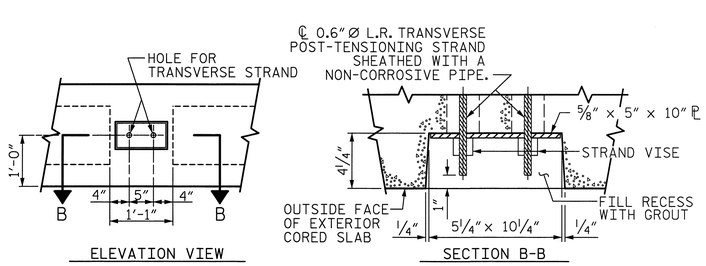

GROUTED RECESS AT END OF POST-TENSIONED STRAND-CORED SLABS

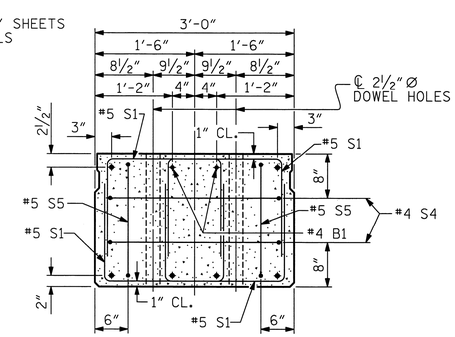

END ELEVATION

SHOWING PLACEMENT OF DOUBLE STIRRUPS AND LOCATION OF DOWEL HOLES.
(STRAND LAYOUT NOT SHOWN.)
INTERIOR SLAB SECTION SHOWN-EXTERIOR SLAB SECTION SIMILAR EXCEPT SHEAR KEY LOCATION.

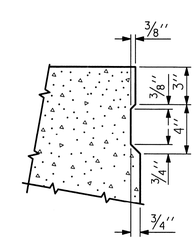

SHEAR KEY DETAIL

NOTE: OMIT SHEAR KEY ON OUTSIDE FACE OF EXTERIOR CORED SLABS.

PROJECT NO. 17BP.1.R.16
GATES COUNTY
STATION: 13+63.50 -L-

SHEET 1 OF 5

STATE OF NORTH CAROLINA
DEPARTMENT OF TRANSPORTATION
RALEIGH

STANDARD
3'-0" X 2'-0"
PRESTRESSED CONCRETE
CORED SLAB UNIT
90° SKEW

Prepared by
URS
URS Corporation - North Carolina
1600 Perimeter Park Drive, Suite 400
Morrisville, NC 27560
PHONE: (919) 461-1100 FAX: (919) 461-1415
NC LIC.# C-2243

NORTH CAROLINA PROFESSIONAL SEAL 5953 ENGINEER CARLDON HALL, JR.
10/31/12

REVISIONS						SHEET NO.
NO.	BY:	DATE:	NO.	BY:	DATE:	10
1			3			TOTAL SHEETS
2			4			30

ASSEMBLED BY : K.H. COMPTON	DATE : 8/14/12
CHECKED BY : R.L. WHITCHER	DATE : 8/22/12
DRAWN BY : MAA 5/10	ADDED 5/6/10
CHECKED BY : GM 5/10	REV. 10/1/11 MAA/GM

10/31/2012
P:\Jobs1\Group A Bridge Replacements\Gates Bridge 025\Structures\FinalDrawings\360025_SD_CS.dgn
kyle.compton

(SHT 1C) STD. NO. PCS4

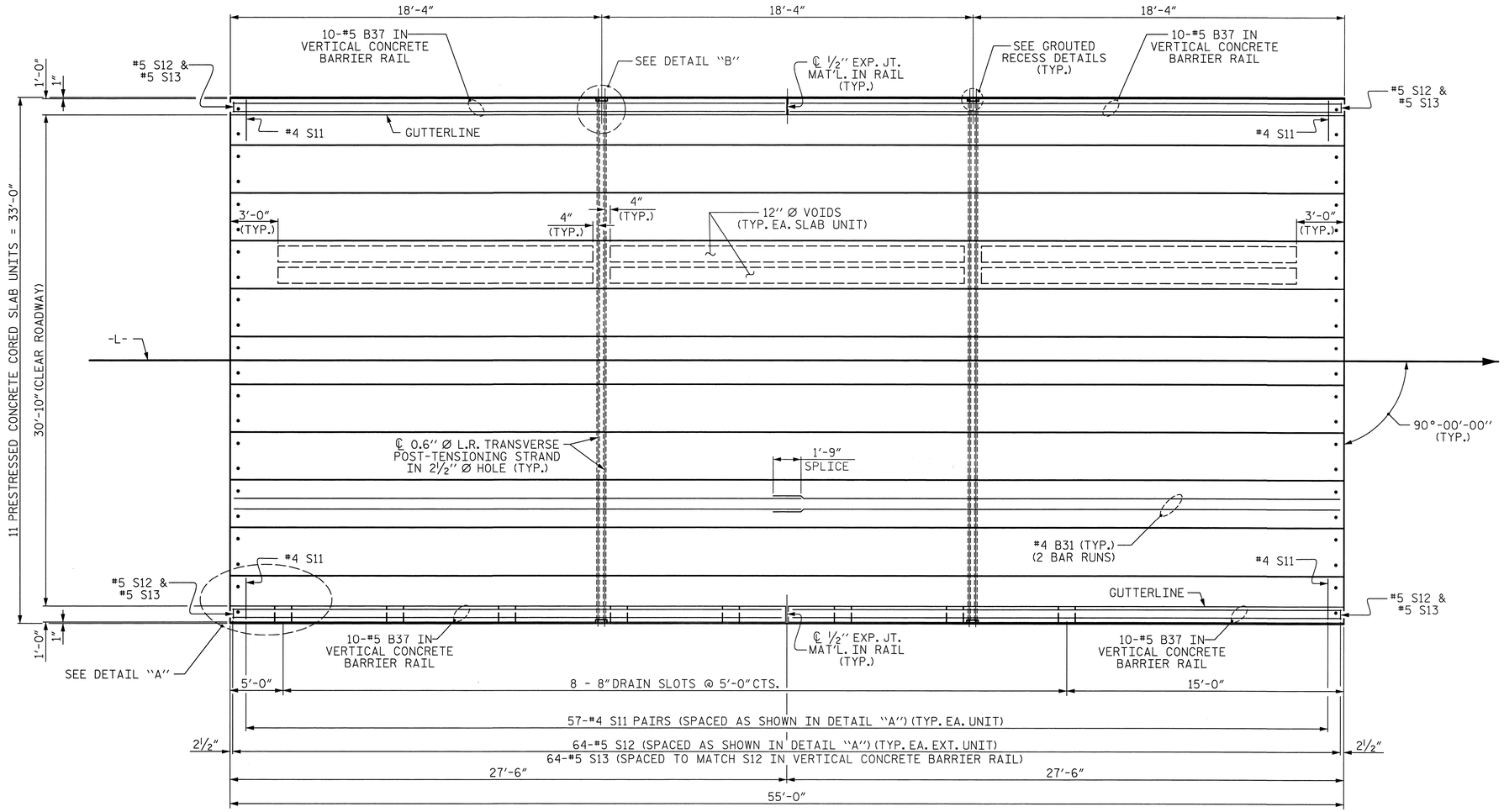

PLAN OF UNIT

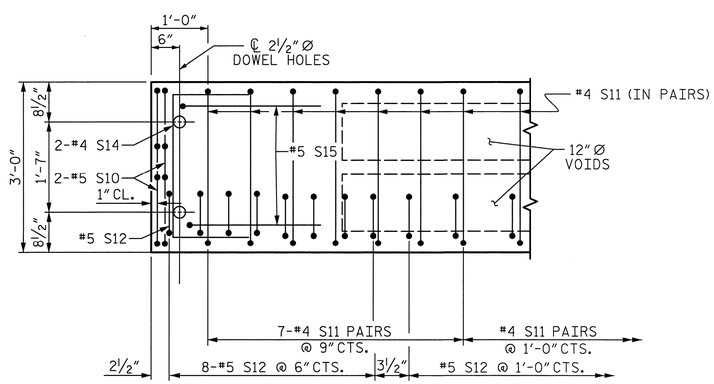

DETAIL "A"

NOTE: EXTERIOR UNIT SHOWN - INTERIOR UNIT SIMILAR EXCEPT OMIT #5 S12 BARS.

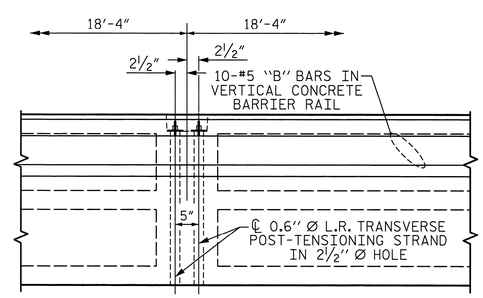

DETAIL "B"

#4 S11 BARS MAY BE SHIFTED AS NECESSARY TO MAINTAIN 1" CLEAR TO GROUTED RECESS AND 2 1/2" Ø TRANSVERSE POST-TENSIONING STRAND HOLES

PROJECT NO. 17BP.1.R.16

GATES COUNTY

STATION: 13+63.50 -L-

SHEET 2 OF 5

STATE OF NORTH CAROLINA
DEPARTMENT OF TRANSPORTATION
RALEIGH

PLAN OF 55' UNIT 30'-10" CLEAR ROADWAY 90° SKEW SPAN A

Prepared by
URS
URS Corporation - North Carolina
1600 Perimeter Park Drive, Suite 400
Morrisville, NC 27560
PHONE: (919) 461-1100 FAX: (919) 461-1415
NC LIC.# C-2243

NORTH CAROLINA PROFESSIONAL SEAL 5953 ENGINEER CARLDON HALL, JR. 10/31/12

REVISIONS						SHEET NO.
NO.	BY:	DATE:	NO.	BY:	DATE:	11
1			3			TOTAL SHEETS
2			4			30

ASSEMBLED BY : K.H. COMPTON		DATE : 8/14/12	
CHECKED BY : R.L. WHITCHER		DATE : 8/22/12	
DRAWN BY : MAA	7/10	REV. 12/5/11	MAA/AAC
CHECKED BY : MKT	8/10		

10/31/2012
P:\Jobs1\Group A Bridge Replacements\Gates Bridge 025\Structures\Final Drawings\360025_SD_S1.dgn
kyle_compton

STD. NO. 24PCS_33_90S_55L (TOP DOWN)

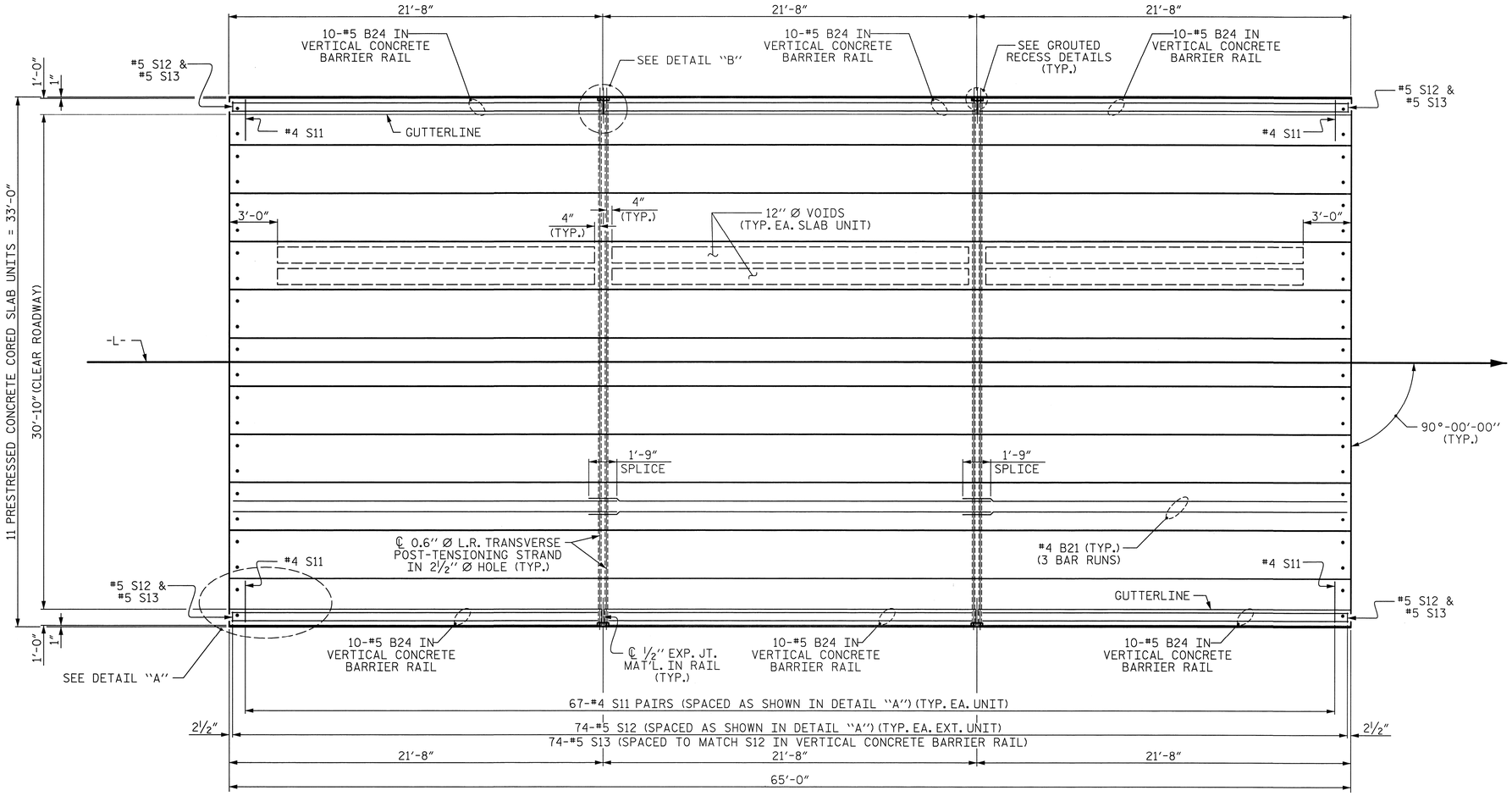

PLAN OF UNIT

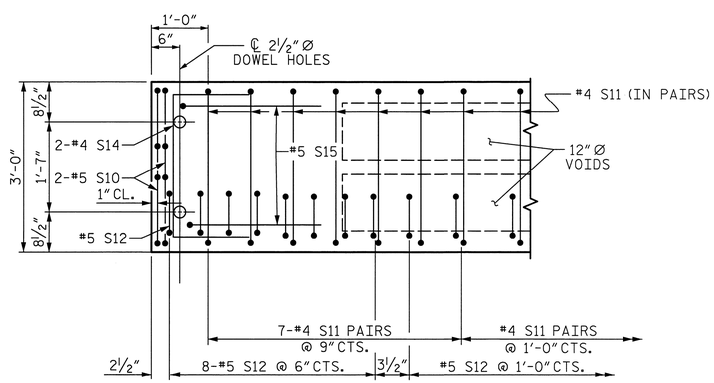

DETAIL "A"

NOTE: EXTERIOR UNIT SHOWN - INTERIOR UNIT SIMILAR EXCEPT OMIT #5 S12 BARS.

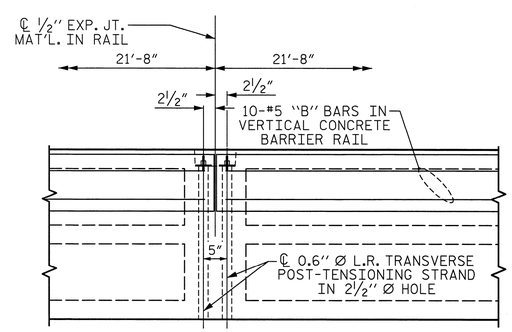

DETAIL "B"

#4 S11 BARS MAY BE SHIFTED AS NECESSARY TO MAINTAIN 1" CLEAR TO GROUTED RECESS AND 2½" Ø TRANSVERSE POST-TENSIONING STRAND HOLES

ASSEMBLED BY : K.H. COMPTON	DATE : 8/14/12		
CHECKED BY : R.L. WHITCHER	DATE : 8/22/12		
DRAWN BY : MAA	6/10	REV. 12/5/11	MAA/AAC
CHECKED BY : MKT	7/10		

Prepared by
URS
URS Corporation - North Carolina
1600 Perimeter Park Drive, Suite 400
Morrisville, NC 27560
PHONE: (919) 461-1100 FAX: (919) 461-1415
NC LIC.# C-2243

NORTH CAROLINA PROFESSIONAL SEAL 5953 ENGINEER CARLDON HALL, JR.
10/31/12

PROJECT NO. 17BP.1.R.16
GATES COUNTY
STATION: 13+63.50 -L-

SHEET 3 OF 5

STATE OF NORTH CAROLINA
DEPARTMENT OF TRANSPORTATION
RALEIGH

PLAN OF 65' UNIT 30'-10" CLEAR ROADWAY 90° SKEW SPAN B

REVISIONS						SHEET NO.
NO.	BY:	DATE:	NO.	BY:	DATE:	12
1			3			TOTAL SHEETS
2			4			30

10/31/2012
P:\Jobs1\Group A Bridge Replacements\Gates Bridge 025\Structures\Final Drawings\360025_SD_S2.dgn
kyle_compton

STD. NO. 24PCS_33_90S_65L

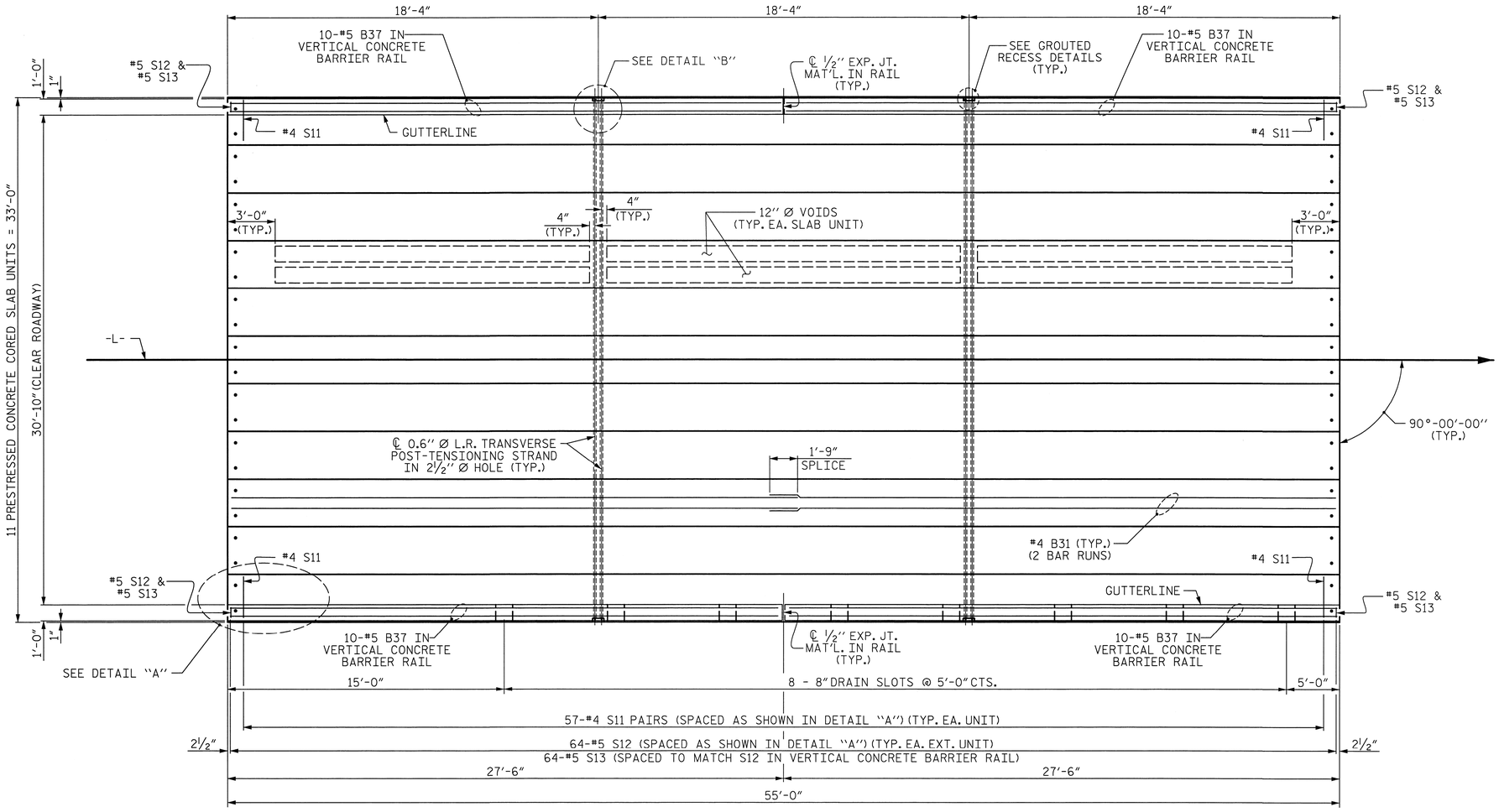

PLAN OF UNIT

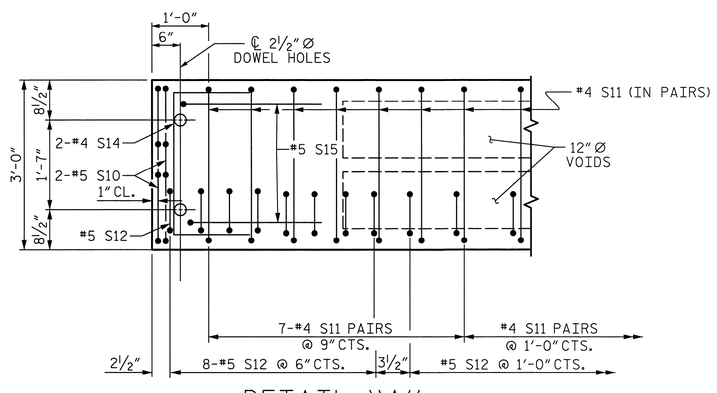

DETAIL "A"

NOTE: EXTERIOR UNIT SHOWN - INTERIOR UNIT SIMILAR EXCEPT OMIT #5 S12 BARS.

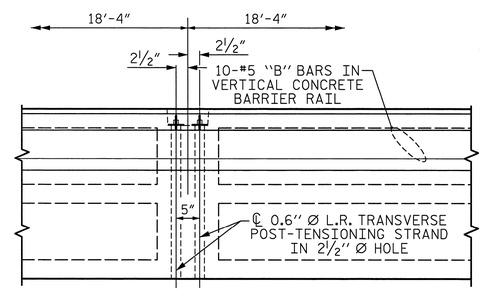

DETAIL "B"

#4 S11 BARS MAY BE SHIFTED AS NECESSARY TO MAINTAIN 1" CLEAR TO GROUTED RECESS AND 2½" Ø TRANSVERSE POST-TENSIONING STRAND HOLES

ASSEMBLED BY : K.H. COMPTON	DATE : 8/14/12		
CHECKED BY : R.L. WHITCHER	DATE : 8/22/12		
DRAWN BY : MAA	7/10	REV. 12/5/11	MAA/AAC
CHECKED BY : MKT	8/10		

Prepared by
URS
URS Corporation - North Carolina
1600 Perimeter Park Drive, Suite 400
Morrisville, NC 27560
PHONE: (919) 461-1100 FAX: (919) 461-1415
NC LIC. # C-2243

NORTH CAROLINA PROFESSIONAL SEAL 5953 ENGINEER J. CARLDON HALL, JR. 10/31/12

PROJECT NO. 17BP.1.R.16

GATES COUNTY

STATION: 13+63.50 -L-

SHEET 2 OF 5

STATE OF NORTH CAROLINA
DEPARTMENT OF TRANSPORTATION
RALEIGH

PLAN OF 55' UNIT 30'-10" CLEAR ROADWAY 90° SKEW SPAN C

REVISIONS						SHEET NO.
NO.	BY:	DATE:	NO.	BY:	DATE:	13
1			3			TOTAL SHEETS
2			4			30

10/31/2012
R:\Jobs1\Group A Bridge Replacements\Gates Bridge 025\Structures\Final Drawings\360025_SD_S3.dgn
kyle.compton

STD. NO. 24PCS_33_90S_55L (TOP DOWN)

BILL OF MATERIAL					
CONCRETE WEARING SURFACE					
BAR	NUMBER	SIZE	TYPE	LENGTH	WEIGHT
* R1	434	#3	STR	26'-1"	4256
* R2	122	#4	STR	20'-0"	1630
* R3	698	#3	STR	15'-11"	4177
* EPOXY COATED REINF. STEEL =					10,063 LBS.
CONCRETE WEARING SURFACE =					5,375 SQ. FT.

SPLICE LENGTH CHART	
BAR SIZE	EPOXY COATED
#3	1'-3"

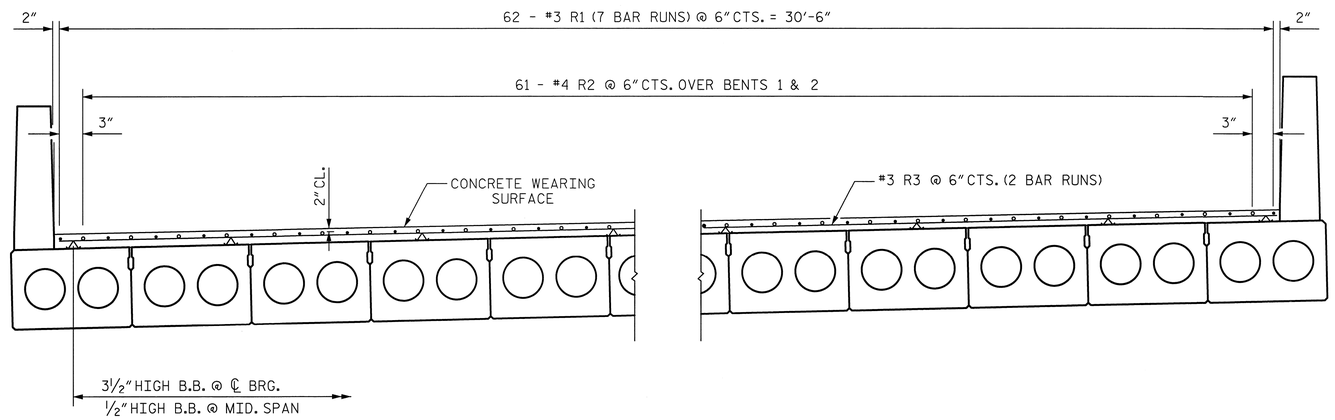

REINFORCING STEEL FOR CONCRETE WEARING SURFACE

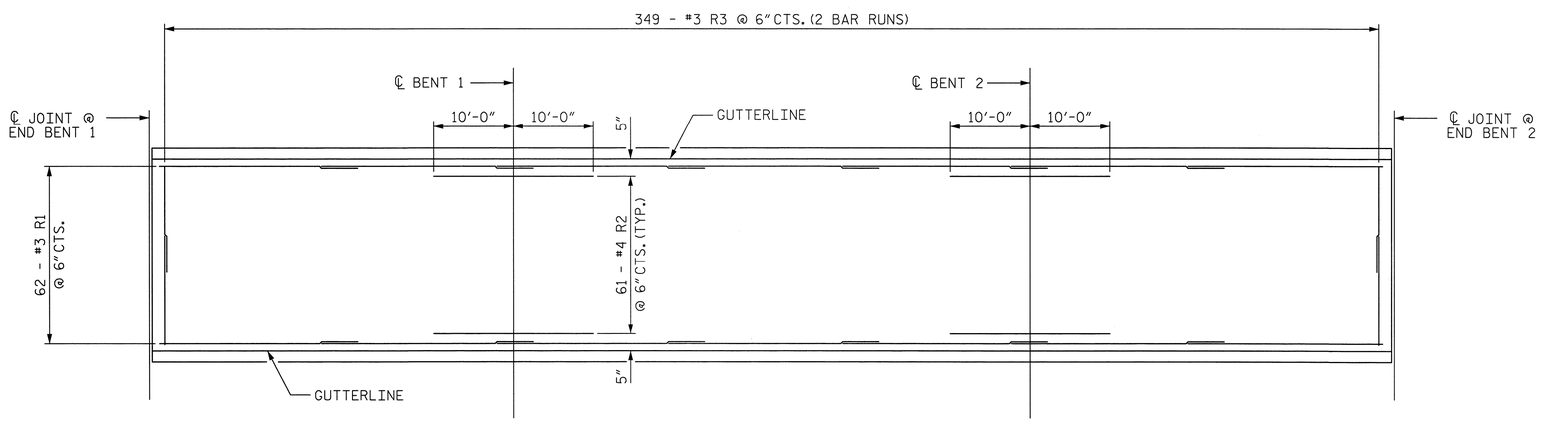

PLAN OF CONCRETE WEARING SURFACE

NOTES:

PLACEMENT OF CONCRETE WEARING SURFACE SHALL OCCUR AFTER CASTING THE VERTICAL CONCRETE BARRIER RAILS. THE COST OF THE REINFORCING STEEL CAST WITH THE CONCRETE WEARING SURFACE AND THE CONCRETE WEARING SURFACE SHALL BE INCLUDED IN THE UNIT PRICE BID FOR CONSTRUCTION OF SUPERSTRUCTURE. FOR CONCRETE WEARING SURFACE, SEE SPECIAL PROVISIONS.

ALL REINFORCING FOR THE CONCRETE WEARING SURFACE SHALL BE EPOXY COATED.

FOR ELASTOMERIC CONCRETE SEE "BRIDGE APPROACH SLAB DETAILS" SHEET.

FOR DETAILS OF CONCRETE BARRIER, SEE "3'-0" x 2'-0" PRESTRESSED CORED SLAB UNIT" SHEET.

Prepared by
URS
URS Corporation - North Carolina
1600 Perimeter Park Drive, Suite 400
Morrisville, NC 27560
PHONE: (919) 461-1100 FAX: (919) 461-1415
NC LIC. # C-2243

NORTH CAROLINA PROFESSIONAL SEAL 5953 ENGINEER CARLDON HALL JR. 10/31/12

PROJECT NO. 17BP.1.R.16
GATES COUNTY
STATION: 13+63.50 -L-

SHEET 4 OF 5

STATE OF NORTH CAROLINA
DEPARTMENT OF TRANSPORTATION
RALEIGH

CONCRETE WEARING SURFACE DETAILS

REVISIONS						SHEET NO.
NO.	BY:	DATE:	NO.	BY:	DATE:	14
1			3			TOTAL SHEETS
2			4			30

ASSEMBLED BY : K.H. COMPTON	DATE : 8/14/12
CHECKED BY : R.L. WHITCHER	DATE : 8/22/12
DRAWN BY : MAA 5/10	ADDED 5/6/10
CHECKED BY : GM 5/10	REV. 10/1/11 MAA/GM

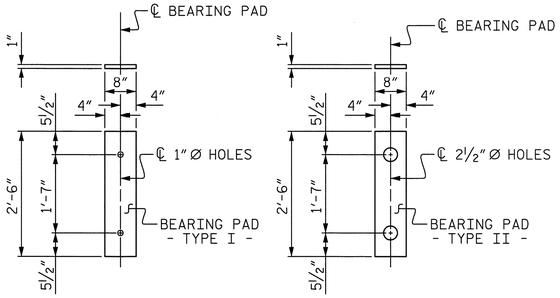

FIXED END
(TYPE I - 44 REQ'D)

EXPANSION END
(TYPE II - 22 REQ'D)

ELASTOMERIC BEARING DETAILS

ELASTOMER IN ALL BEARINGS SHALL BE 60 DUROMETER HARDNESS.

GRADE 270 STRANDS	0.6" Ø L.R.
AREA (SQUARE INCHES)	0.217
ULTIMATE STRENGTH (LBS. PER STRAND)	58,600
APPLIED PRESTRESS (LBS. PER STRAND)	43,950

CONCRETE RELEASE STRENGTH	
UNIT	PSI
55' UNITS	6200
65' UNITS	4800

GUTTERLINE CONCRETE THICKNESS & RAIL HEIGHT	CONCRETE OVERLAY THICKNESS @ MID-SPAN	RAIL HEIGHT @ MID-SPAN
55' UNITS	3 11/16"	3'-9 11/16"
65' UNITS	3½"	3'-9½"

DEAD LOAD DEFLECTION AND CAMBER	3'-0" x 2'-0"
55' CORED SLAB UNIT	0.6" Ø L.R. STRAND
CAMBER (SLAB ALONE IN PLACE)	3" ↑
DEFLECTION DUE TO SUPERIMPOSED DEAD LOAD ✱✱	5/16" ↓
FINAL CAMBER	2 11/16" ↑

✱✱ INCLUDES FUTURE WEARING SURFACE

DEAD LOAD DEFLECTION AND CAMBER	3'-0" x 2'-0"
65' CORED SLAB UNIT	0.6" Ø L.R. STRAND
CAMBER (SLAB ALONE IN PLACE)	3⅜" ↑
DEFLECTION DUE TO SUPERIMPOSED DEAD LOAD ✱✱	½" ↓
FINAL CAMBER	2⅞" ↑

✱✱ INCLUDES FUTURE WEARING SURFACE

BAR TYPES

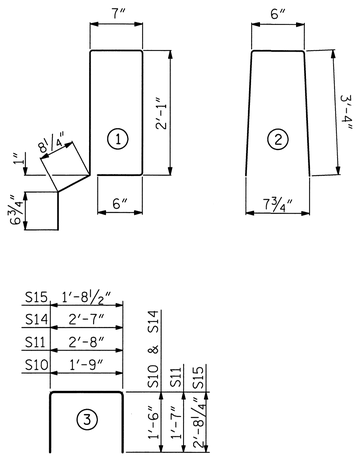

ALL BAR DIMENSIONS ARE OUT TO OUT

CORED SLABS REQUIRED	NUMBER	LENGTH	TOTAL LENGTH
55' UNIT			
EXTERIOR C.S.	4	55'-0"	220'-0"
INTERIOR C.S.	18	55'-0"	990'-0"
TOTAL			1210'-0"

CORED SLABS REQUIRED	NUMBER	LENGTH	TOTAL LENGTH
65' UNIT			
EXTERIOR C.S.	2	65'-0"	130'-0"
INTERIOR C.S.	9	65'-0"	585'-0"
TOTAL			715'-0"

NOTES

ALL PRESTRESSING STRANDS SHALL BE 7-WIRE LOW RELAXATION GRADE 270 STRANDS AND SHALL CONFORM TO AASHTO M203 EXCEPT FOR SAMPLING REQUIREMENTS WHICH SHALL BE IN ACCORDANCE WITH THE STANDARD SPECIFICATIONS.

ALL REINFORCING STEEL CAST WITH THE CORED SLAB SECTIONS SHALL BE GRADE 60 AND SHALL BE INCLUDED IN THE UNIT PRICE BID FOR PRESTRESSED CONCRETE CORED SLABS.

RECESSES FOR TRANSVERSE STRANDS SHALL BE GROUTED AFTER THE TENSIONING OF THE STRANDS.

THE 2½" Ø DOWEL HOLES AT FIXED ENDS OF SLAB SECTIONS SHALL BE FILLED WITH NON-SHRINK GROUT.

THE BACKER RODS SHALL CONFORM TO THE REQUIREMENTS OF TYPE M BOND BREAKER. SEE SECTION 1028 OF THE STANDARD SPECIFICATIONS.

WHEN CORED SLABS ARE CAST, AN INTERNAL HOLD-DOWN SYSTEM SHALL BE EMPLOYED TO PREVENT VOIDS FROM RISING OR MOVING SIDEWAYS. AT LEAST SIX WEEKS PRIOR TO CASTING CORED SLABS, THE CONTRACTOR SHALL SUBMIT TO THE ENGINEER FOR REVIEW AND COMMENT, DETAILED DRAWINGS OF THE PROPOSED HOLD-DOWN SYSTEM. IN ADDITION TO STRUCTURAL DETAILS, LOCATION AND SPACING OF THE HOLD-DOWNS SHALL BE INDICATED.

THE TRANSFER OF LOAD FROM THE ANCHORAGES TO THE CORED SLAB UNIT SHALL BE DONE WHEN THE CONCRETE HAS REACHED A COMPRESSIVE STRENGTH OF NOT LESS THAN THE REQUIRED STRENGTH SHOWN IN THE "CONCRETE RELEASE STRENGTH" TABLE.

ALL REINFORCING STEEL IN VERTICAL CONCRETE BARRIER RAILS SHALL BE EPOXY COATED.

PRESTRESSING STRANDS SHALL BE CUT FLUSH WITH THE CORED SLAB UNIT ENDS.

APPLY EPOXY PROTECTIVE COATING TO CORED SLAB UNIT ENDS.

GROOVED CONTRACTION JOINTS, ½" IN DEPTH, SHALL BE TOOLED IN ALL EXPOSED FACES OF THE BARRIER RAIL AND IN ACCORDANCE WITH ARTICLE 825-10(B) OF THE STANDARD SPECIFICATIONS. A CONTRACTION JOINT SHALL BE LOCATED AT EACH THIRD POINT BETWEEN BARRIER RAIL EXPANSION JOINTS. ONLY ONE CONTRACTION JOINT IS REQUIRED AT MIDPOINT OF BARRIER RAIL SEGMENTS LESS THAN 20 FEET IN LENGTH AND NO CONTRACTION JOINTS ARE REQUIRED FOR THOSE SEGMENTS LESS THAN 10 FEET IN LENGTH.

TRANSVERSE POST TENSIONING OF THE CORED SLAB UNITS SHALL BE DONE IN ACCORDANCE WITH THE STANDARD SPECIFICATIONS.

MAINTAIN A SYMMETRIC TENSION FORCE BETWEEN EACH PAIR OF TRANSVERSE POST TENSIONING STRANDS IN THE DIAPHRAGM.

THE #4 S11 STIRRUPS MAY BE SHIFTED AS NECESSARY TO MAINTAIN 1" CLEAR TO THE GROUTED RECESS.

FOR GROUT FOR STRUCTURES, SEE SPECIAL PROVISIONS.

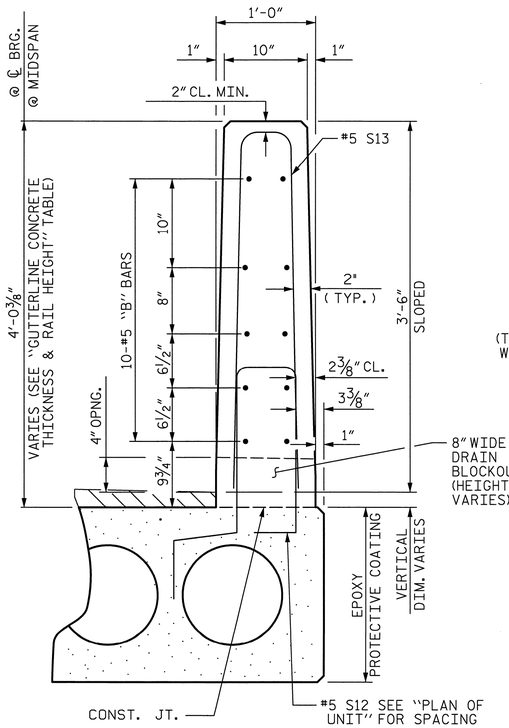

SECTION THRU RAIL

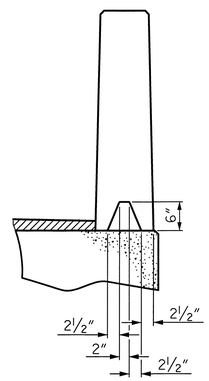

SECTION S-S
AT DAM IN OPEN JOINT
(THIS IS TO BE USED ONLY WHEN SLIP FORM IS USED)

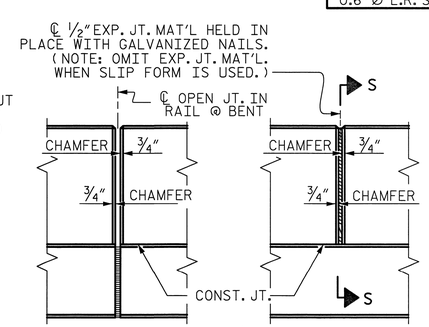

ELEVATION AT EXPANSION JOINTS

BILL OF MATERIAL FOR ONE 55' CORED SLAB UNIT							
				EXTERIOR UNIT		INTERIOR UNIT	
BAR	NUMBER	SIZE	TYPE	LENGTH	WEIGHT	LENGTH	WEIGHT
B31	4	#4	STR	28'-3"	75	28'-3"	75
S10	8	#5	3	4'-9"	40	4'-9"	40
S11	114	#4	3	5'-10"	444	5'-10"	444
✱S12	64	#5	1	6'-6"	434		
S14	4	#4	3	5'-7"	15	5'-7"	15
S15	4	#5	3	7'-1"	30	7'-1"	30
REINFORCING STEEL			LBS.		604		604
✱EPOXY COATED REINFORCING STEEL			LBS.		434		
8500 P.S.I. CONCRETE			CU. YDS.		9.4		9.4
0.6" Ø L.R. STRANDS			No.		31		31

BILL OF MATERIAL FOR ONE 65' CORED SLAB UNIT							
				EXTERIOR UNIT		INTERIOR UNIT	
BAR	NUMBER	SIZE	TYPE	LENGTH	WEIGHT	LENGTH	WEIGHT
B21	6	#4	STR	22'-10"	92	22'-10"	92
S10	8	#5	3	4'-9"	40	4'-9"	40
S11	134	#4	3	5'-10"	522	5'-10"	522
✱S12	74	#5	1	6'-6"	502		
S14	4	#4	3	5'-7"	15	5'-7"	15
S15	4	#5	3	7'-1"	30	7'-1"	30
REINFORCING STEEL			LBS.		699		699
✱EPOXY COATED REINFORCING STEEL			LBS.		502		
6000 P.S.I. CONCRETE			CU. YDS.		11.0		11.0
0.6" Ø L.R. STRANDS			No.		24		24

BILL OF MATERIAL FOR VERTICAL CONCRETE BARRIER RAIL						
BAR	BARS PER PAIR OF EXTERIOR UNITS	TOTAL NO.	SIZE	TYPE	LENGTH	WEIGHT
	55' UNIT					
✱B37	40	80	#5	STR	27'-1"	2260
✱S13	128	256	#5	2	7'-2"	1914
✱EPOXY COATED REINFORCING STEEL				LBS.		4178
CLASS AA CONCRETE				CU.YDS.		29.8
TOTAL VERTICAL CONCRETE BARRIER RAIL				LN. FT.		220.5

BILL OF MATERIAL FOR VERTICAL CONCRETE BARRIER RAIL						
BAR	BARS PER PAIR OF EXTERIOR UNITS	TOTAL NO.	SIZE	TYPE	LENGTH	WEIGHT
	65' UNIT					
✱B24	60	60	#5	STR	21'-3"	1330
✱S13	148	148	#5	2	7'-2"	1106
✱EPOXY COATED REINFORCING STEEL				LBS.		2436
CLASS AA CONCRETE				CU.YDS.		17.6
TOTAL VERTICAL CONCRETE BARRIER RAIL				LN. FT.		130.25

Prepared by
URS
URS Corporation - North Carolina
1600 Perimeter Park Drive, Suite 400
Morrisville, NC 27560
PHONE(919)461-1100 FAX(919)461-1415
NC LIC.# C-2243

PROJECT NO. 17BP.1.R.16
GATES COUNTY
STATION: 13+63.50 -L-

SHEET 5 OF 5

STATE OF NORTH CAROLINA
DEPARTMENT OF TRANSPORTATION
RALEIGH

STANDARD
3'-0" X 2-0"
PRESTRESSED CONCRETE
CORED SLAB UNIT
90° SKEW

NORTH CAROLINA PROFESSIONAL SEAL 5953 ENGINEER J. CARLDON HALL JR. 10/31/12

VERTICAL CONCRETE BARRIER RAIL DETAILS

ASSEMBLED BY : K.H. COMPTON		DATE : 8/14/12	
CHECKED BY : R.L. WHITCHER		DATE : 8/22/12	
DRAWN BY : MAA	6/10	REV. 12/11	MAA/AAC
CHECKED BY : MKT	7/10		

REVISIONS						SHEET NO.
NO.	BY:	DATE:	NO.	BY:	DATE:	15
1			3			TOTAL SHEETS
2			4			30

10/31/2012
P:\Jobs1\Group A Bridge Replacements\Gates Bridge 025\Structures\FinalDrawings\360025_SD_BOM.dgn
kyle.compton

STD. NO. 24PCS3_33_90S

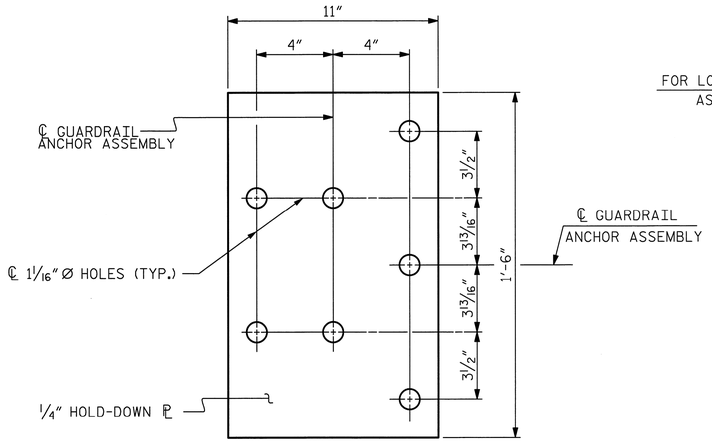

PLAN

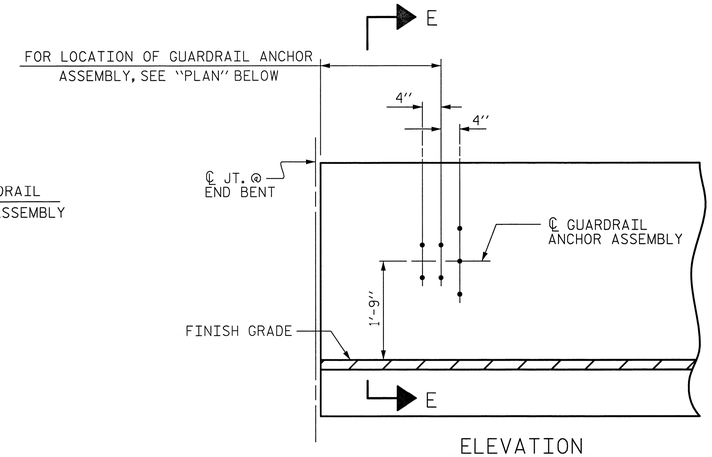

ELEVATION

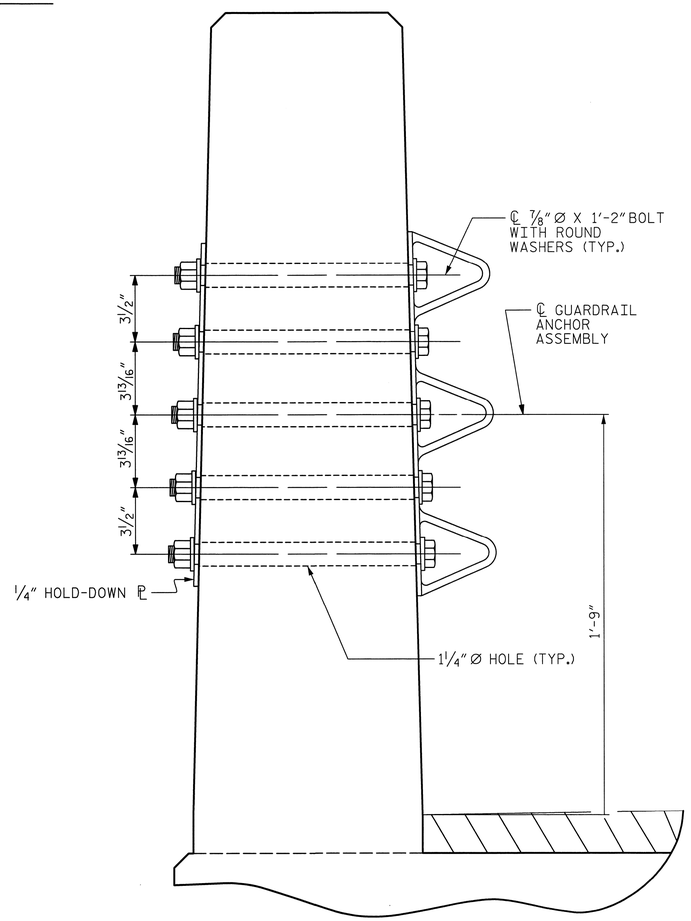

SECTION E-E

GUARDRAIL ANCHOR ASSEMBLY DETAILS

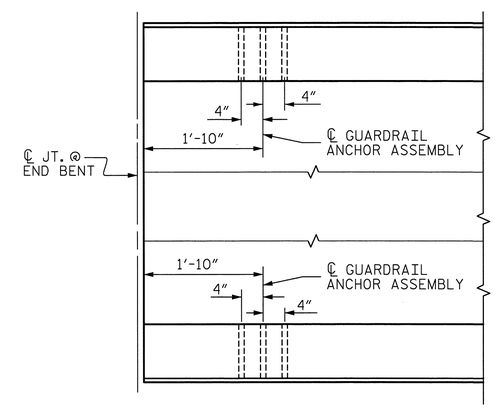

PLAN

LOCATION OF ANCHORS FOR GUARDRAIL

END BENT #1 SHOWN, END BENT #2 SIMILAR.

NOTES

THE GUARDRAIL ANCHOR ASSEMBLY SHALL CONSIST OF A 1/4" HOLD DOWN PLATE AND 7 - 7/8" Ø BOLTS WITH NUTS AND WASHERS.

THE HOLD-DOWN PLATE SHALL CONFORM TO AASHTO M270 GRADE 36. AFTER FABRICATION, THE HOLD-DOWN PLATE SHALL BE HOT-DIP GALVANIZED IN ACCORDANCE WITH AASHTO M111.

BOLTS SHALL CONFORM TO THE REQUIREMENTS OF ASTM A307 AND NUTS SHALL CONFORM TO THE REQUIREMENTS OF AASHTO M291. BOLTS, NUTS AND WASHERS SHALL BE GALVANIZED. (AT THE CONTRACTOR'S OPTION, STAINLESS STEEL BOLTS, NUTS AND WASHERS MAY BE USED AS AN ALTERNATE FOR THE 7/8" Ø GALVANIZED BOLTS, NUTS AND WASHERS. THEY SHALL CONFORM TO OR EXCEED THE MECHANICAL REQUIREMENTS OF ASTM A307. THE USE OF THIS ALTERNATE SHALL BE APPROVED BY THE ENGINEER.)

THE GUARDRAIL ANCHOR ASSEMBLY IS REQUIRED AT ALL POINTS WHERE APPROACH GUARDRAIL IS TO BE ATTACHED TO THE END OF BARRIER RAIL. FOR POINTS OF ATTACHMENT, SEE SKETCH.

AFTER INSTALLATION, THE EXPOSED THREAD OF THE BOLT SHALL BE BURRED WITH A SHARP POINTED TOOL.

THE COST OF THE GUARDRAIL ANCHOR ASSEMBLY SHALL BE INCLUDED IN THE UNIT CONTRACT PRICE BID FOR VERTICAL CONCRETE BARRIER RAIL.

THE VERTICAL REINFORCING BARS MAY BE SHIFTED SLIGHTLY IN THE VERTICAL CONCRETE BARRIER RAIL TO CLEAR ASSEMBLY BOLTS.

THE 1 1/4" Ø HOLES SHALL BE FORMED OR DRILLED WITH A CORE BIT. IMPACT TOOLS WILL NOT BE PERMITTED. ANY CONCRETE DAMAGED BY THIS WORK SHALL BE REPAIRED TO THE SATISFACTION OF THE ENGINEER.

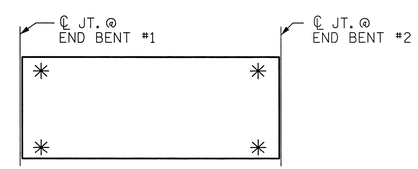

SKETCH SHOWING POINTS OF ATTACHMENT

✳ DENOTES GUARDRAIL ANCHOR ASSEMBLY

PROJECT NO. 17BP.1.R.16

GATES COUNTY

STATION: 13+63.50-L-

ASSEMBLED BY : K.H. COMPTON	DATE : 8/14/12
CHECKED BY : R.L. WHITCHER	DATE : 8/22/12
DRAWN BY : MAA 7/09	ADDED 8/01/09
CHECKED BY : GM 7/09	

Prepared by
URS
URS Corporation - North Carolina
1600 Perimeter Park Drive, Suite 400
Morrisville, NC 27560
PHONE: (919) 461-1100 FAX: (919) 461-1415
NC L.I.C.# C-2243

NORTH CAROLINA PROFESSIONAL SEAL 5953 ENGINEER J. CARLDON HALL, JR. 10/31/12

STATE OF NORTH CAROLINA
DEPARTMENT OF TRANSPORTATION
RALEIGH

STANDARD
GUARDRAIL ANCHORAGE FOR VERTICAL CONCRETE BARRIER RAIL

REVISIONS						SHEET NO.
NO.	BY:	DATE:	NO.	BY:	DATE:	16
1			3			TOTAL SHEETS
2			4			30

(SHT 1) STD. NO. GRA3

10/31/2012
P:\Jobs\Group A Bridge Replacements\Gates Bridge 025\Structures\FinalDrawings\360025_SD_CBR.dgn
kyle.compton

NOTES

STIRRUPS IN CAP MAY BE SHIFTED AS NECESSARY TO CLEAR DOWELS.

THE CONCRETE IN THE SHADED AREA OF THE WING SHALL BE POURED AFTER THE VERTICAL CONCRETE BARRIER RAIL IS CAST IF SLIP FORMING IS USED.

FOR PILE SPLICE DETAILS, SEE SHEET 4 OF 4.

FOR WING DETAILS, SEE SHEET 3 OF 4.

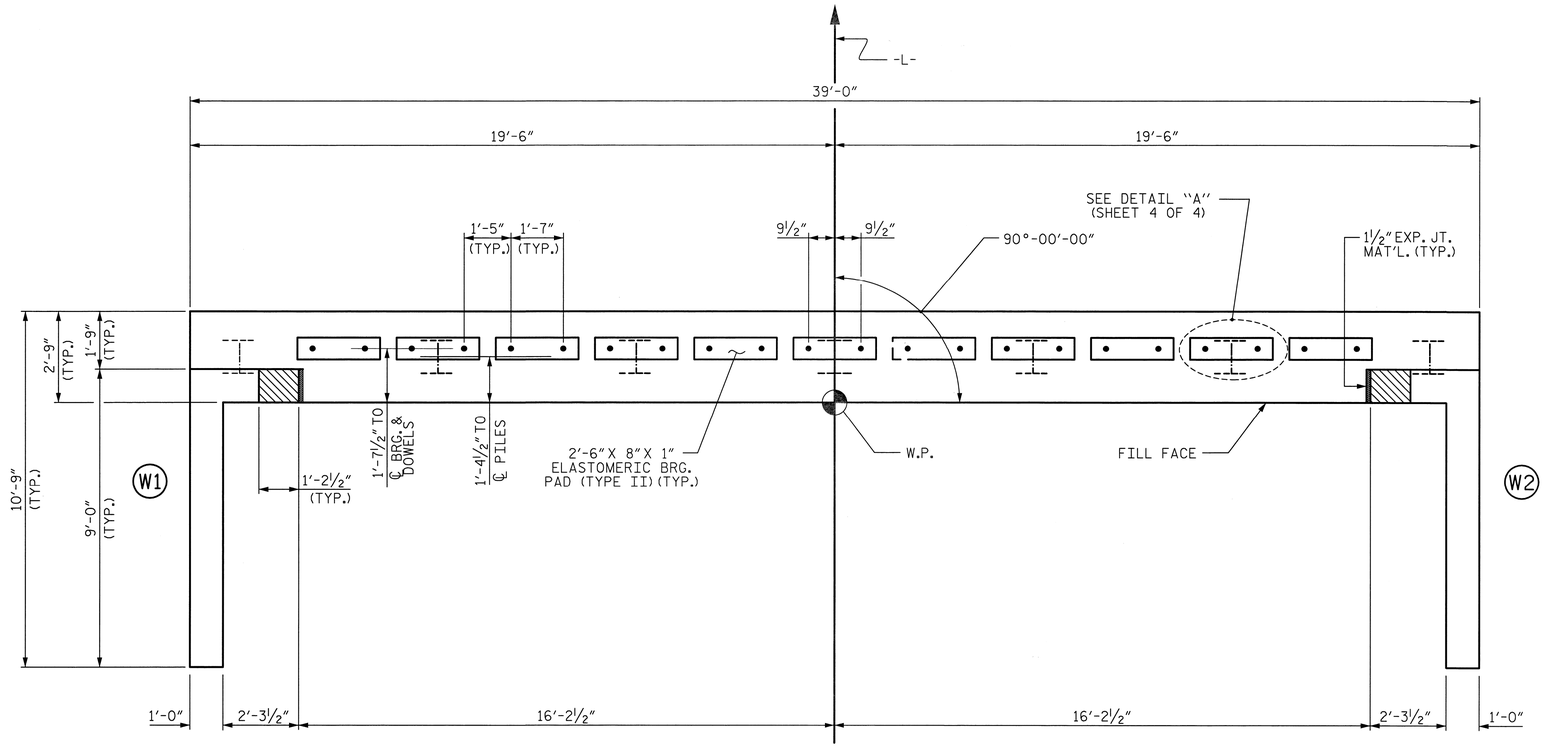

PLAN

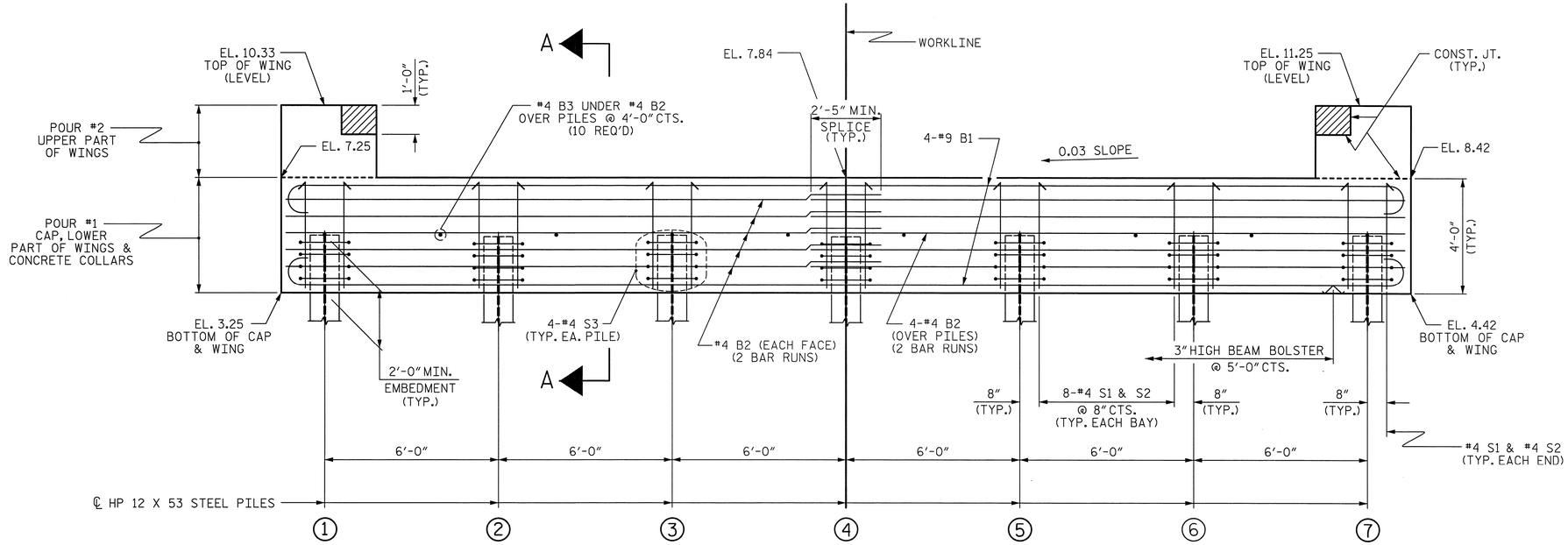

ELEVATION

WINGS NOT SHOWN FOR CLARITY.
FOR SECTION A-A, SEE SHEET 4 OF 4.
CONCRETE COLLARS FOR STEEL PILES NOT SHOWN IN PLAN AND ELEVATION VIEWS FOR CLARITY.
SEE "CORROSION PROTECTION FOR STEEL PILES DETAIL", SHEET 4 OF 4.

TOP OF PILE ELEVATIONS	
1	5.30
2	5.48
3	5.66
4	5.84
5	6.02
6	6.20
7	6.38

Prepared by
URS
URS Corporation - North Carolina
1600 Perimeter Park Drive, Suite 400
Morrisville, NC 27560
PHONE: 919) 461-1100 FAX: 919) 461-1415
NC LIC.# C-2243

PROJECT NO. 17BP.1.R.16
GATES COUNTY
STATION: 13+63.50 -L-

SHEET 1 OF 4

STATE OF NORTH CAROLINA
DEPARTMENT OF TRANSPORTATION
RALEIGH

SUBSTRUCTURE

END BENT No. 1

NORTH CAROLINA PROFESSIONAL SEAL 5953 ENGINEER CARLDON HALL, JR. 10/31/12

REVISIONS						SHEET NO.
NO.	BY:	DATE:	NO.	BY:	DATE:	17
1			3			TOTAL SHEETS
2			4			30

ASSEMBLED BY : K.H. COMPTON DATE : 8/14/12
CHECKED BY : R.L. WHITCHER DATE : 8/22/12
DRAWN BY : WJH 12/11
CHECKED BY : AAC 12/11

10/31/2012
P:\Jobs1\Group A Bridge Replacements\Gates Bridge 025\Structures\FinalDrawings\360025_SD_EB_1.dgn
kyle_compton

STD. NO. EB_33_90S4

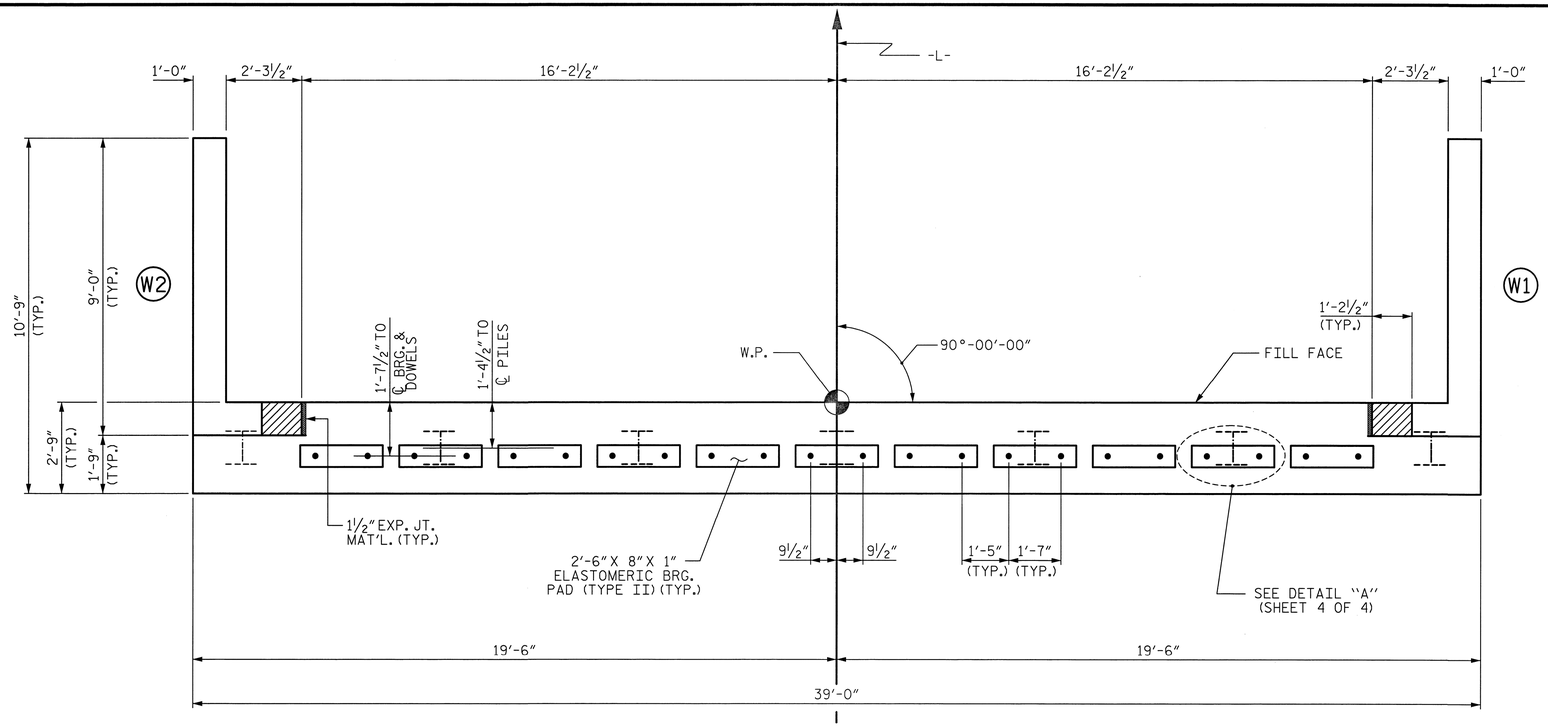

PLAN

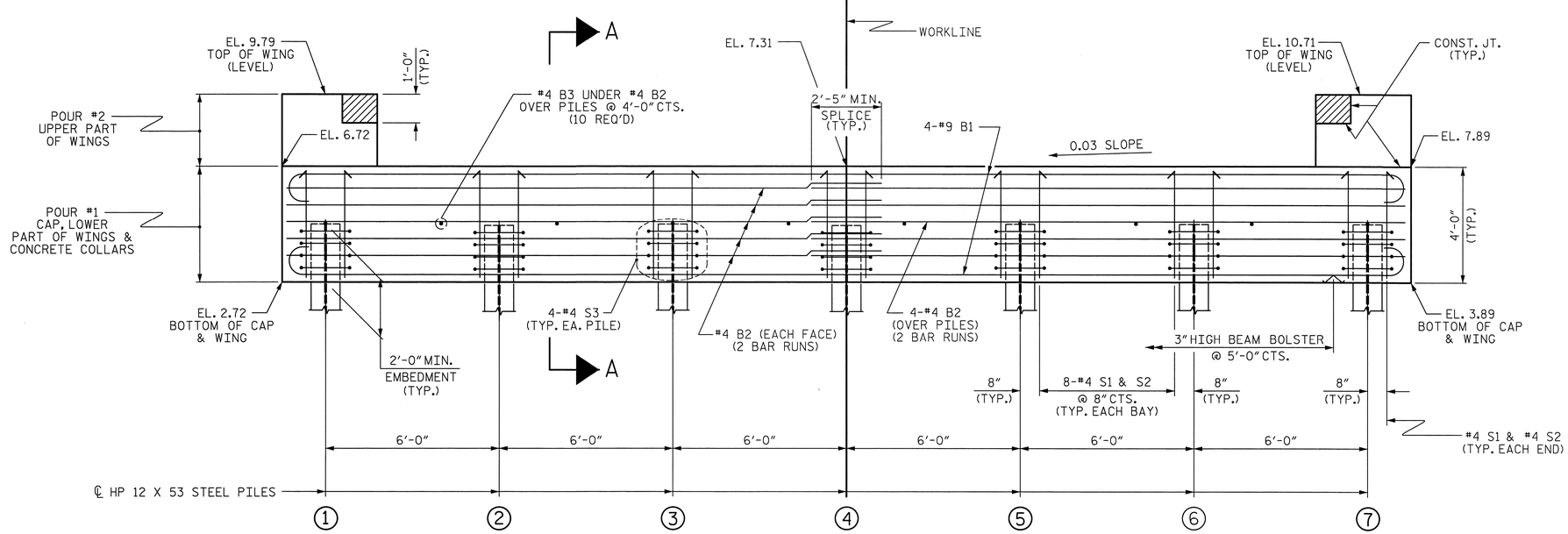

ELEVATION

WINGS NOT SHOWN FOR CLARITY.
FOR SECTION A-A, SEE SHEET 4 OF 4.
CONCRETE COLLARS FOR STEEL PILES NOT SHOWN IN PLAN AND ELEVATION VIEWS FOR CLARITY.
SEE "CORROSION PROTECTION FOR STEEL PILES DETAIL", SHEET 4 OF 4.

NOTES

STIRRUPS IN CAP MAY BE SHIFTED AS NECESSARY TO CLEAR DOWELS.

THE CONCRETE IN THE SHADED AREA OF THE WING SHALL BE POURED AFTER THE VERTICAL CONCRETE BARRIER RAIL IS CAST IF SLIP FORMING IS USED.

FOR PILE SPLICE DETAILS, SEE SHEET 4 OF 4.

FOR WING DETAILS, SEE SHEET 3 OF 4.

TOP OF PILE ELEVATIONS	
1	4.77
2	4.95
3	5.13
4	5.31
5	5.49
6	5.67
7	5.85

Prepared by
URS
URS Corporation – North Carolina
1600 Perimeter Park Drive, Suite 400
Morrisville, NC 27560
PHONE: 919 461-1100 FAX: 919 461-1415
NC LIC.# C-2243

PROJECT NO. 17BP.1.R.16
GATES COUNTY
STATION: 13+63.50 -L-

SHEET 2 OF 4

STATE OF NORTH CAROLINA
DEPARTMENT OF TRANSPORTATION
RALEIGH

SUBSTRUCTURE

END BENT No. 2

NORTH CAROLINA PROFESSIONAL SEAL 5953 ENGINEER J. CARLDON HALL, JR. 10/31/12

REVISIONS						SHEET NO.
NO.	BY:	DATE:	NO.	BY:	DATE:	18
1			3			TOTAL SHEETS
2			4			30

ASSEMBLED BY : K.H. COMPTON DATE : 8/14/12
CHECKED BY : R.L. WHITCHER DATE : 8/22/12
DRAWN BY : WJH 12/11
CHECKED BY : AAC 12/11

10/31/2012
P:\Jobs1\Group A Bridge Replacements\Gates Bridge 025\Structures\Final Drawings\360025_SD_EB_2.dgn
kyle_compton

STD. NO. EB_33_90S4

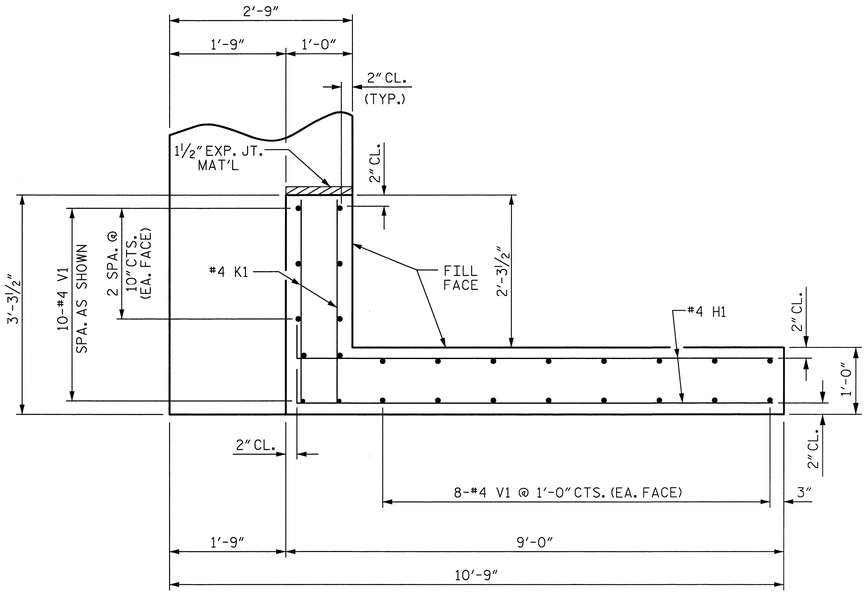

PLAN OF WING (W1)

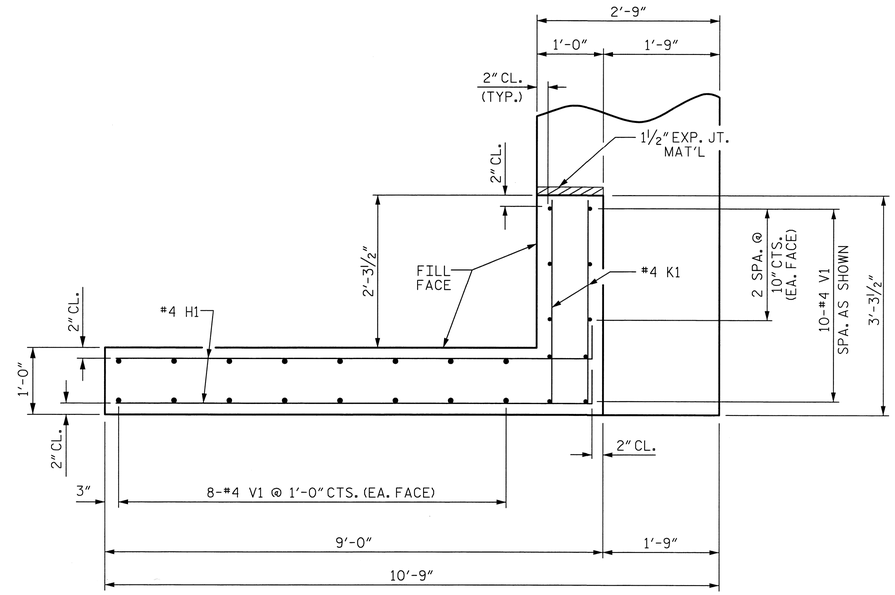

PLAN OF WING (W2)

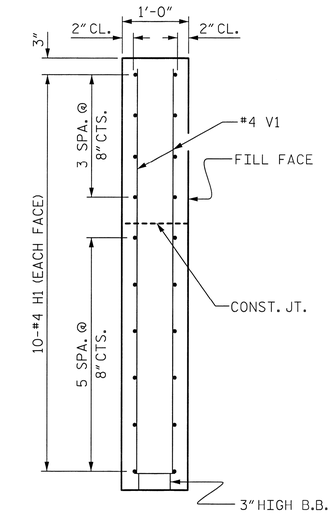

SECTION X-X

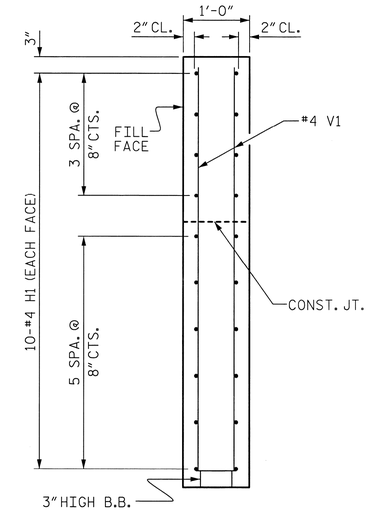

SECTION Y-Y

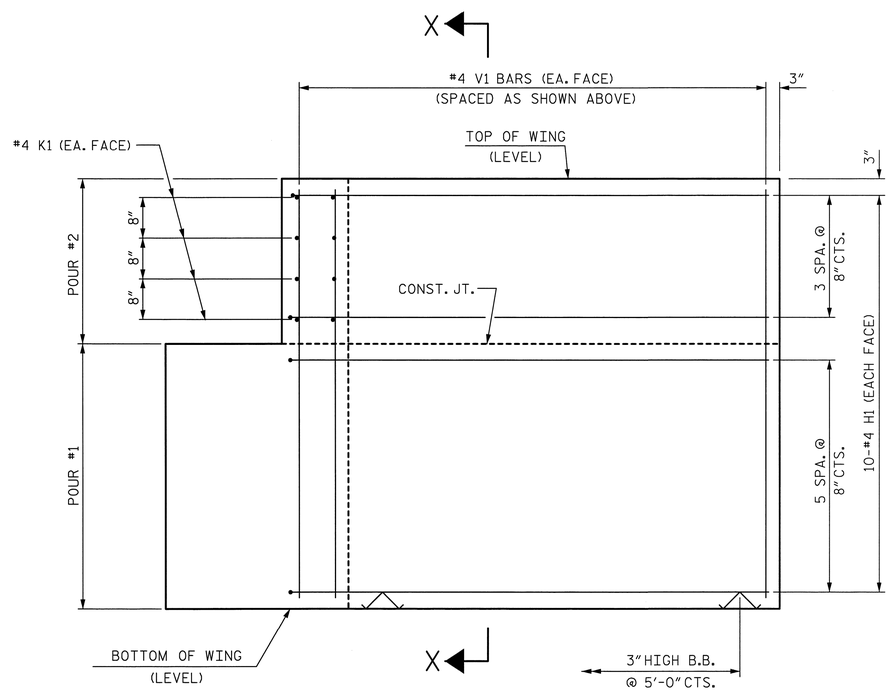

ELEVATION OF WING (W1)

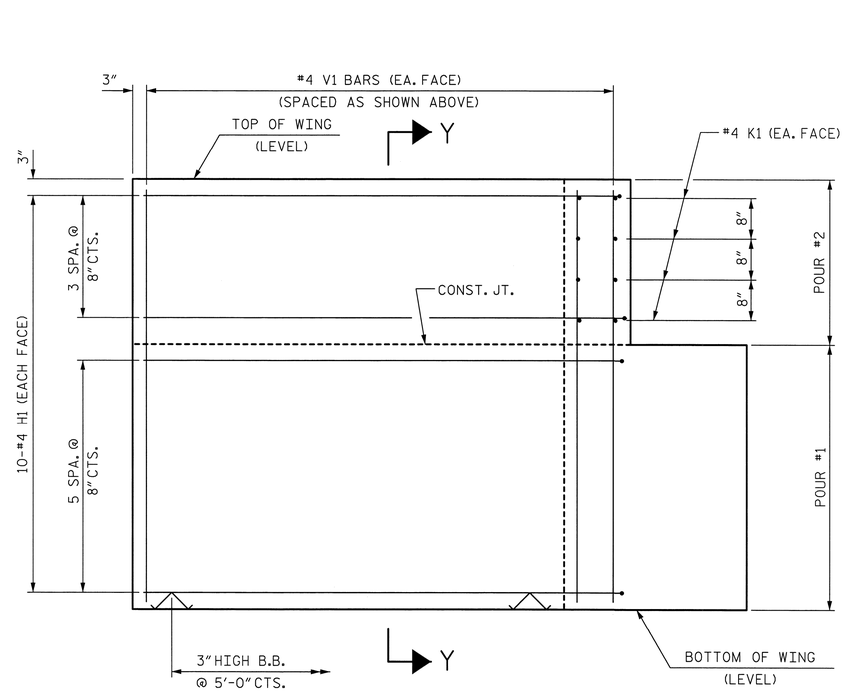

ELEVATION OF WING (W2)

WING DETAILS

PROJECT NO. 17BP.1.R.16

GATES COUNTY

STATION: 13+63.50 -L-

SHEET 3 OF 4

STATE OF NORTH CAROLINA
DEPARTMENT OF TRANSPORTATION
RALEIGH

SUBSTRUCTURE

END BENT
WING DETAILS

ASSEMBLED BY : K.H. COMPTON	DATE : 8/14/12
CHECKED BY : R.L. WHITCHER	DATE : 8/22/12
DRAWN BY : WJH	12/11
CHECKED BY : AAC	12/11

Prepared by
URS
URS Corporation - North Carolina
1600 Perimeter Park Drive, Suite 400
Morrisville, NC 27560
PHONE: (919) 461-1100 FAX: (919) 461-1415
NC LIC.# C-2243

NORTH CAROLINA PROFESSIONAL SEAL 5953 ENGINEER J. CARLDON HALL, JR. 10/31/12

REVISIONS								SHEET NO.
NO.	BY:	DATE:	NO.	BY:	DATE:			19
1			3					TOTAL SHEETS
2			4					30

10/31/2012
P:\Jobs1\Group A Bridge Replacements\Gates Bridge 025\Structures\FinalDrawings\360025_SD_EB_3.dgn
kyle_compton

STD. NO. EB 33 90S4

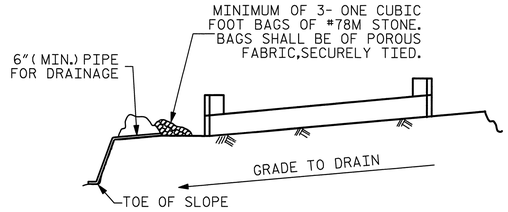

BAGGED STONE AND PIPE SHALL BE PLACED IMMEDIATELY AFTER COMPLETION OF END BENT EXCAVATION. PIPE MAY BE EITHER CONCRETE, CORRUGATED STEEL, CORRUGATED ALUMINUM ALLOY, OR CORRUGATED PLASTIC. PERFORATED PIPE WILL NOT BE ALLOWED.

BAGGED STONE SHALL REMAIN IN PLACE UNTIL THE ENGINEER DIRECTS THAT IT BE REMOVED. THE CONTRACTOR SHALL REMOVE AND DISPOSE OF SILT ACCUMULATIONS AT BAGGED STONE WHEN SO DIRECTED BY THE ENGINEER. BAGS SHALL BE REMOVED AND REPLACED WHENEVER THE ENGINEER DETERMINES THAT THEY HAVE DETERIORATED AND LOST THEIR EFFECTIVENESS.

NO SEPARATE PAYMENT WILL BE MADE FOR THIS WORK AND THE ENTIRE COST OF THIS WORK SHALL BE INCLUDED IN THE UNIT CONTRACT PRICE BID FOR THE SEVERAL PAY ITEMS.

TEMPORARY DRAINAGE AT END BENT

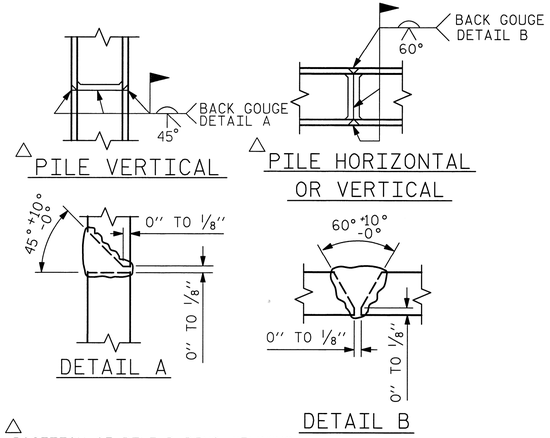

△ POSITION OF PILE DURING WELDING.

PILE SPLICE DETAILS

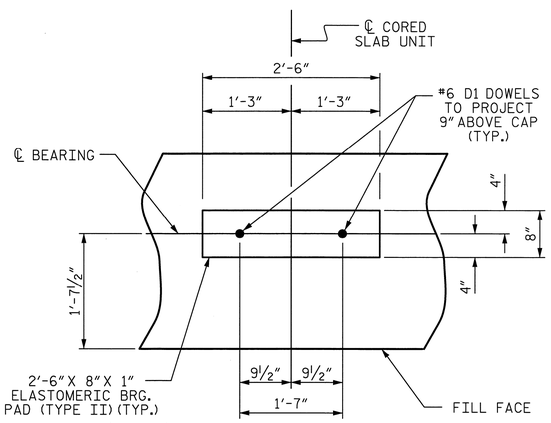

DETAIL "A"

(END BENT No. 1 SHOWN, END BENT No. 2 SIMILAR BY ROTATION)

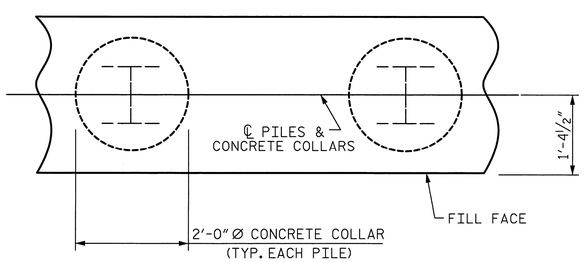

PLAN

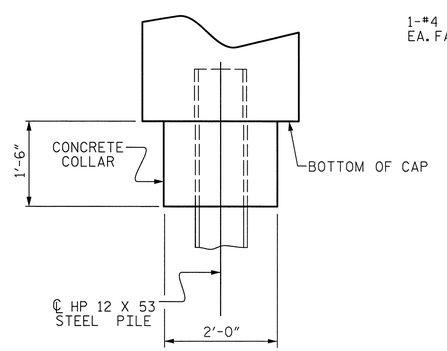

ELEVATION

CORROSION PROTECTION FOR STEEL PILES DETAIL

(END BENT No. 1 SHOWN, END BENT No. 2 SIMILAR BY ROTATION)

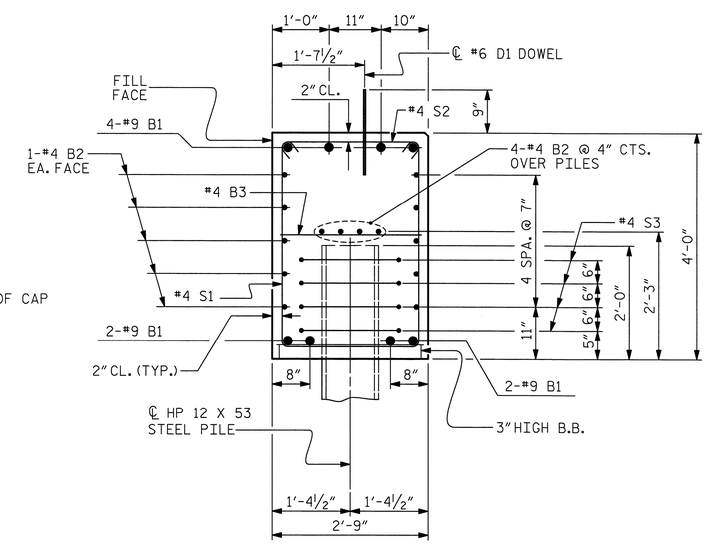

SECTION A-A

(CONCRETE COLLAR NOT SHOWN FOR CLARITY. SEE "CORROSION PROTECTION FOR STEEL PILES DETAIL.")

BAR TYPES

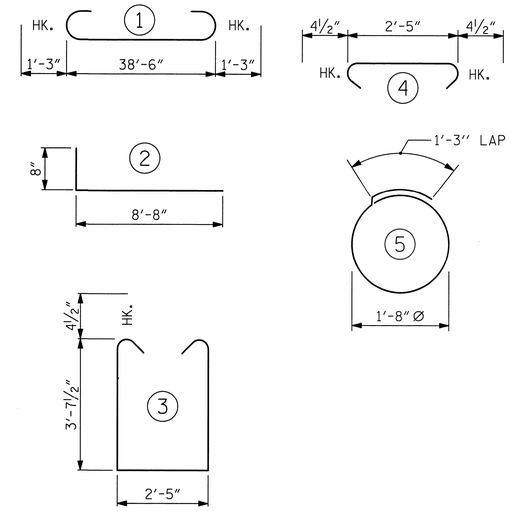

ALL BAR DIMENSIONS ARE OUT TO OUT.

END BENT No. 1	END BENT No. 2
HP 12 X 53 STEEL PILES	HP 12 X 53 STEEL PILES
NO: 7 LIN. FT.= 525	NO: 7 LIN. FT.= 560

BILL OF MATERIAL FOR ONE END BENT

BAR	NO.	SIZE	TYPE	LENGTH	WEIGHT
B1	8	#9	1	41'-0"	1115
B2	28	#4	STR	20'-7"	385
B3	10	#4	STR	2'-5"	16
D1	22	#6	STR	1'-6"	50
H1	40	#4	2	9'-4"	249
K1	16	#4	STR	2'-11"	31
S1	50	#4	3	10'-5"	348
S2	50	#4	4	3'-2"	106
S3	28	#4	5	6'-6"	122
V1	52	#4	STR	6'-2"	214

REINFORCING STEEL (FOR ONE END BENT) 2636 LBS.

CLASS A CONCRETE BREAKDOWN (FOR ONE END BENT)

POUR #1 CAP, LOWER PART OF WINGS & COLLARS 19.5 C.Y.

POUR #2 UPPER PART OF WINGS 2.3 C.Y.

TOTAL CLASS A CONCRETE 21.8 C.Y.

Prepared by URS
URS Corporation - North Carolina
1600 Perimeter Park Drive, Suite 400
Morrisville, NC 27560
PHONE: (919) 461-1100 FAX: (919) 461-1415
NC LIC.# C-2243

PROJECT NO. 17BP.1.R.16

GATES COUNTY

STATION: 13+63.50 -L-

SHEET 4 OF 4

STATE OF NORTH CAROLINA
DEPARTMENT OF TRANSPORTATION
RALEIGH

SUBSTRUCTURE

END BENT No. 1 & 2 DETAILS

NORTH CAROLINA PROFESSIONAL SEAL 5953 ENGINEER J. CARLDON HALL, JR. 10/31/12

REVISIONS						SHEET NO.
NO.	BY:	DATE:	NO.	BY:	DATE:	20
1			3			TOTAL SHEETS
2			4			30

ASSEMBLED BY : K.H. COMPTON DATE : 8/14/12
CHECKED BY : R.L. WHITCHER DATE : 8/22/12

DRAWN BY : WJH 12/11
CHECKED BY : AAC 12/11

10/31/2012
P:\Jobs1\Group A Bridge Replacements\Gates Bridge 025\Structures\Final Drawings\360025_SD_EB_4.dgn
kyle.compton

STD. NO. EB_33_90S4

NOTES

STIRRUPS IN CAP MAY BE SHIFTED AS NECESSARY TO CLEAR DOWELS.

THE LATERAL GUIDES ARE NOT TO BE POURED UNTIL AFTER THE CORED SLAB UNITS ARE IN PLACE.

★ INVERT ALTERNATE STIRRUPS.

GALVANIZE THE TOP OF EACH INTERIOR BENT PILE A MINIMUM OF 25 FEET. GALVANIZE IN ACCORDANCE WITH THE SPECIAL PROVISIONS

THE CONTRACTOR HAS THE OPTION TO OMIT THE LATERAL GUIDE IF APPROVED BY THE ENGINEER.

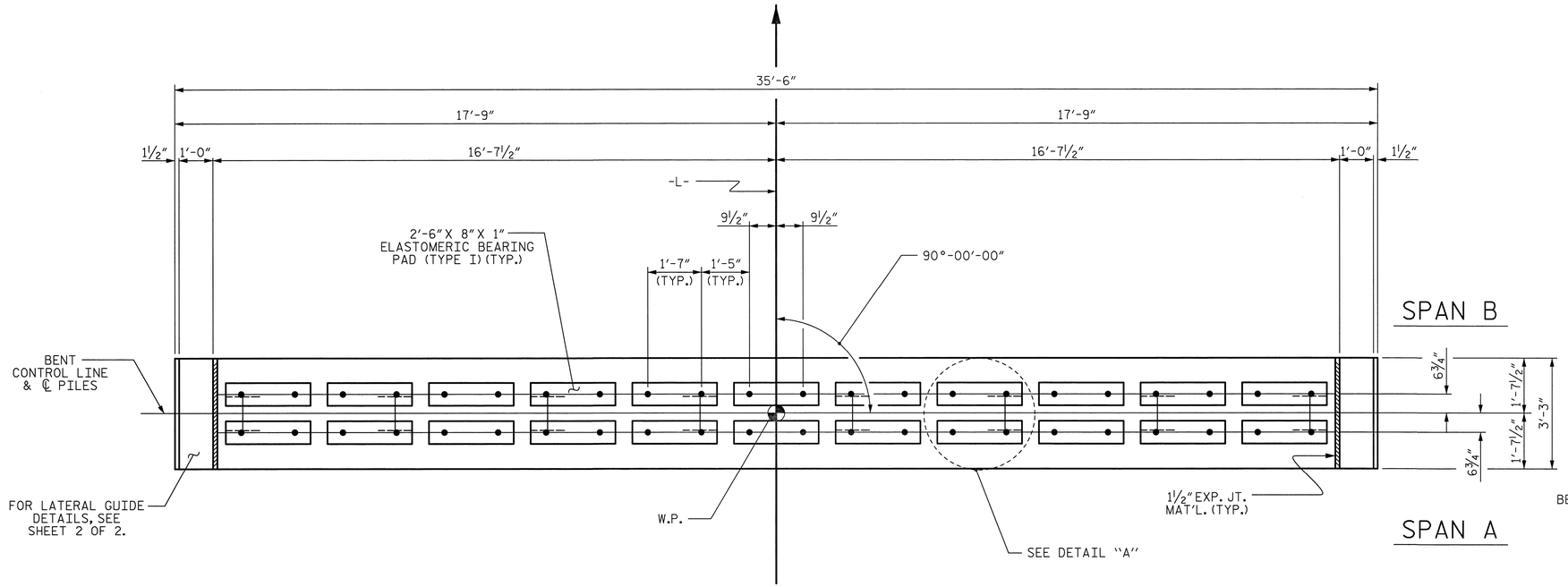

PLAN

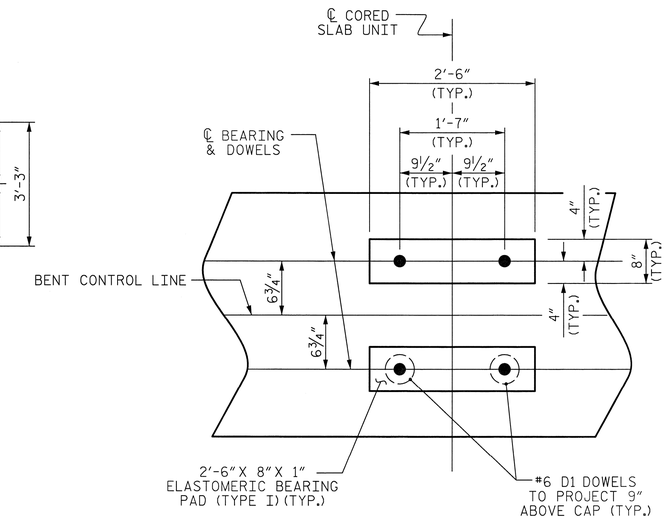

DETAIL "A"

(DIMENSIONS ARE TYPICAL EACH BEARING)

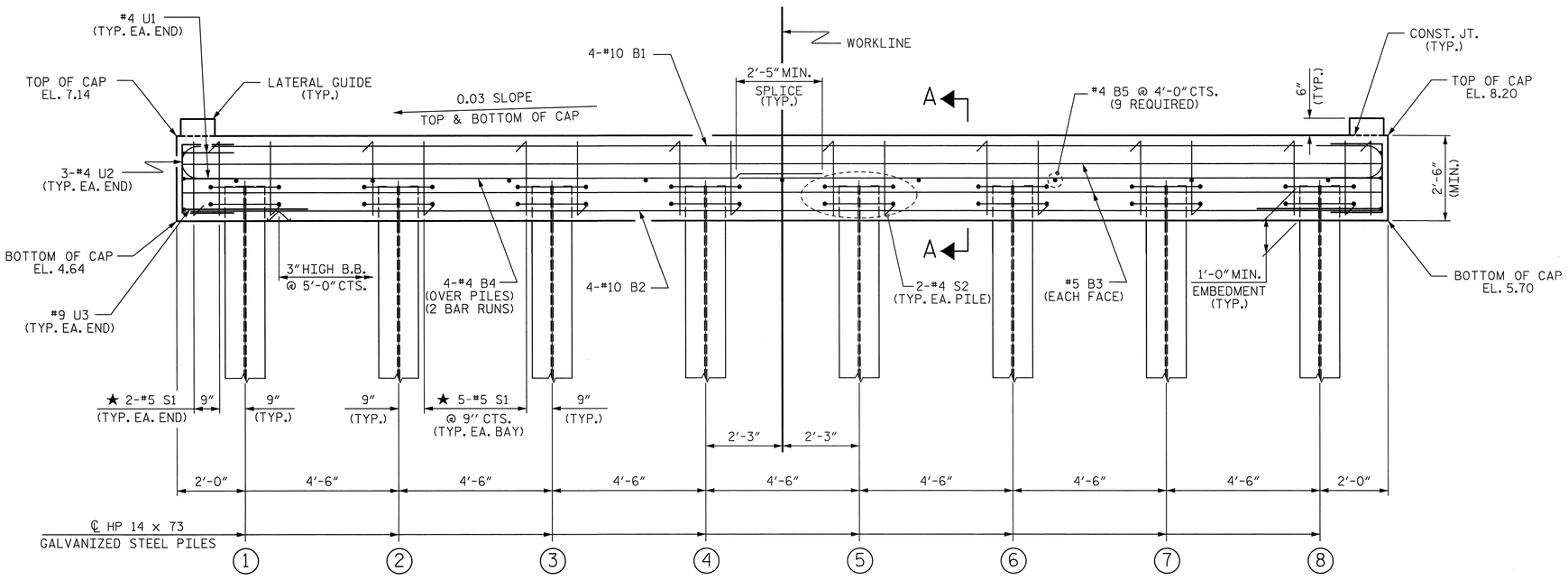

ELEVATION

FOR SECTION A-A, SEE SHEET 2 OF 2

TOP OF PILE ELEVATIONS	
1	5.70
2	5.83
3	5.97
4	6.10
5	6.24
6	6.37
7	6.51
8	6.64

PROJECT NO. 17BP.1.R.16

GATES COUNTY

STATION: 13+63.50 -L-

SHEET 1 OF 2

STATE OF NORTH CAROLINA
DEPARTMENT OF TRANSPORTATION
RALEIGH

SUBSTRUCTURE

BENT No. 1

Prepared by URS
URS Corporation – North Carolina
1600 Perimeter Park Drive, Suite 400
Morrisville, NC 27560
PHONE: (919) 461-1100 FAX: (919) 461-1415
NC LIC. # C-2243

NORTH CAROLINA PROFESSIONAL SEAL 3953 ENGINEER J. CARLDON HALL, JR. 10/31/12

REVISIONS						SHEET NO.
NO.	BY:	DATE:	NO.	BY:	DATE:	21
1			3			TOTAL SHEETS
2			4			30

ASSEMBLED BY : K.H. COMPTON DATE : 8/14/12
CHECKED BY : R.L. WHITCHER DATE : 8/22/12

DRAWN BY : DGE 05/10
CHECKED BY : MKT 05/10

10/31/2012
P:\Jobs1\Group A Bridge Replacements\Gates Bridge 025\Structures\FinalDrawings\360025_SD_B1_1.dgn
kyle_compton

STD. NO. 14" HP_BT_33_90S_<60'

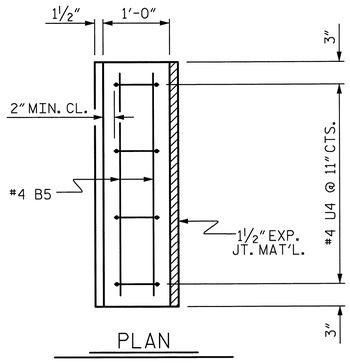

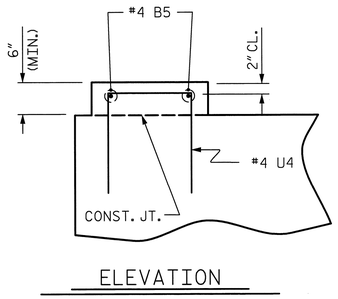

LATERAL GUIDE DETAILS

(LEFT LATERAL GUIDE SHOWN, RIGHT SIDE SIMILAR)

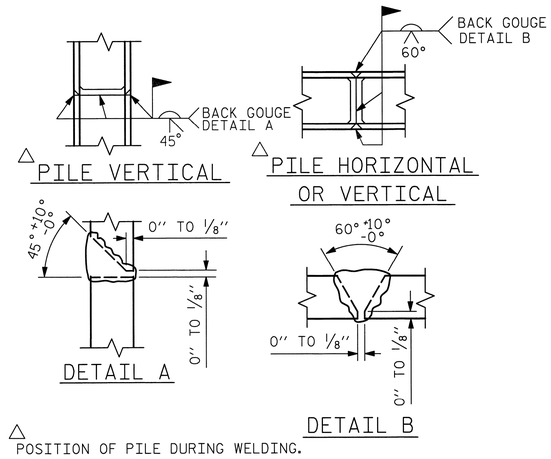

△ POSITION OF PILE DURING WELDING.

PILE SPLICE DETAILS

BAR TYPES

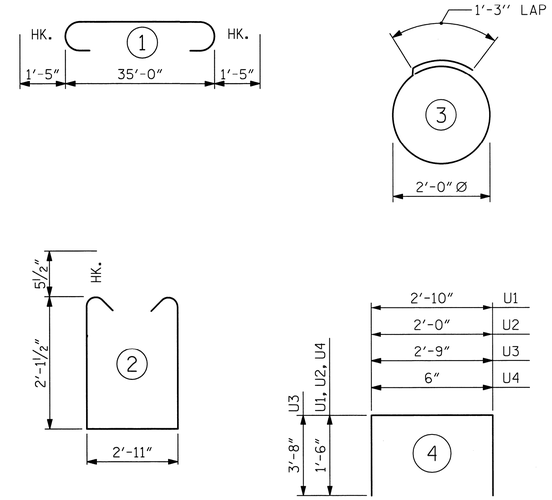

ALL BAR DIMENSIONS ARE OUT TO OUT.

BILL OF MATERIAL FOR ONE BENT

BAR	NO.	SIZE	TYPE	LENGTH	WEIGHT
B1	4	#10	1	37'-10"	651
B2	4	#10	STR	35'-2"	605
B3	4	#5	STR	35'-2"	147
B4	8	#4	STR	18'-10"	101
B5	13	#4	STR	2'-11"	25
D1	44	#6	STR	1'-6"	99
S1	39	#5	2	8'-1"	329
S2	16	#4	3	7'-7"	81
U1	4	#4	4	5'-10"	16
U2	6	#4	4	5'-0"	20
U3	2	#9	4	10'-1"	69
U4	8	#4	4	3'-6"	19

REINFORCING STEEL (FOR ONE BENT) 2162 LBS

CLASS A CONCRETE BREAKDOWN (FOR ONE BENT)

POUR #1 (CAP) 10.7 C.Y.

POUR #2 (LATERAL GUIDES) 0.1 C.Y.

TOTAL CLASS A CONCRETE 10.8 C.Y.

HP 14 X 73 ~~GALVANIZED~~ STEEL PILES (FOR ONE BENT)

No. 8 LIN. FT. 840

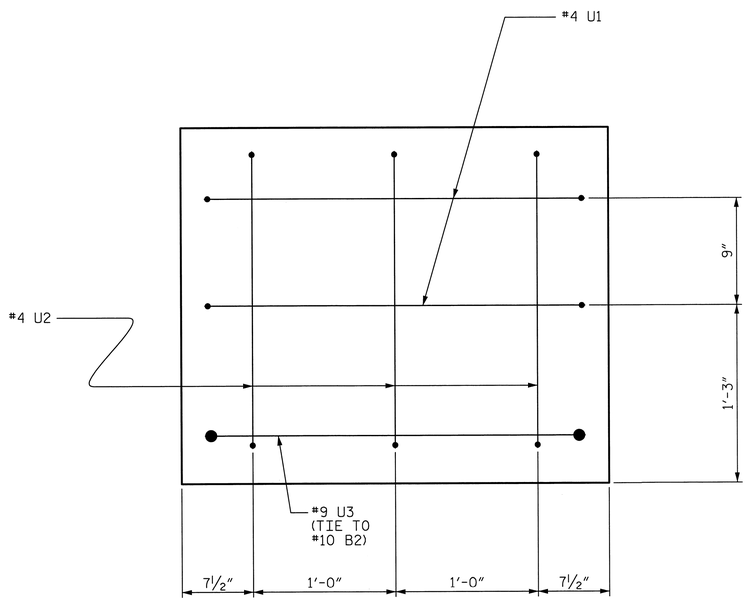

END OF CAP VIEW

(TYPICAL BOTH ENDS)

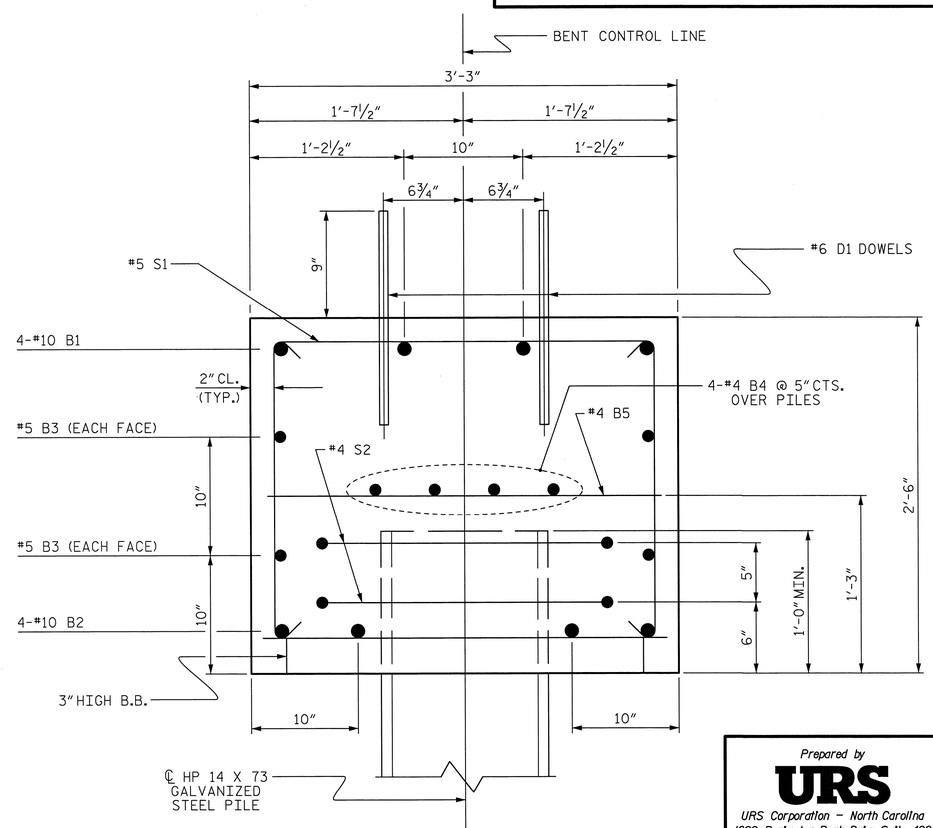

SECTION A-A

PROJECT NO. 17BP.1.R.16

GATES COUNTY

STATION: 13+63.50 -L-

SHEET 2 OF 2

STATE OF NORTH CAROLINA
DEPARTMENT OF TRANSPORTATION
RALEIGH

SUBSTRUCTURE

BENT No. 1

REVISIONS							SHEET NO.
NO.	BY:	DATE:	NO.	BY:	DATE:		22
1			3				TOTAL SHEETS
2			4				30

Prepared by
URS
URS Corporation - North Carolina
1600 Perimeter Park Drive, Suite 400
Morrisville, NC 27560
PHONE: 919) 461-1100 FAX: 919) 461-1415
NC LIC.# C-2243

NORTH CAROLINA PROFESSIONAL SEAL 5953 ENGINEER CARLDON HALL, JR. 10/31/12

DRAWN BY :	K.H. COMPTON	DATE :	8/14/12
CHECKED BY :	R.L. WHITCHER	DATE :	8/22/12
DRAWN BY :	DGE 05/10		
CHECKED BY :	MKT 05/10		

10/31/2012
P:\Jobs1\Group A Bridge Replacements\Gates Bridge 025\Structures\Final Drawings\360025_SD_B1_2.dgn
kyle.compton

STD. NO. 14" HP_BT_33_90S_<60'

NOTES

STIRRUPS IN CAP MAY BE SHIFTED AS NECESSARY TO CLEAR DOWELS.

THE LATERAL GUIDES ARE NOT TO BE POURED UNTIL AFTER THE CORED SLAB UNITS ARE IN PLACE.

★ INVERT ALTERNATE STIRRUPS.

GALVANIZE THE TOP OF EACH INTERIOR BENT PILE A MINIMUM OF 25 FEET. GALVANIZE IN ACCORDANCE WITH THE SPECIAL PROVISIONS

THE CONTRACTOR HAS THE OPTION TO OMIT THE LATERAL GUIDE IF APPROVED BY THE ENGINEER.

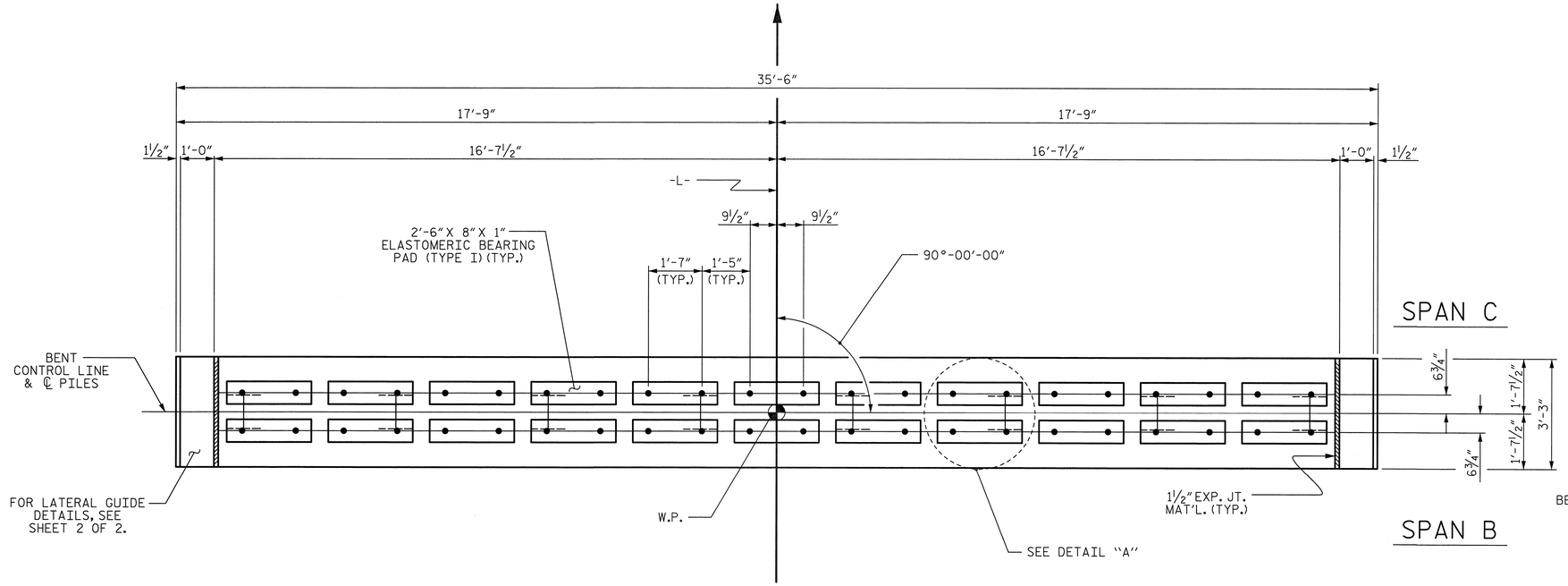

PLAN

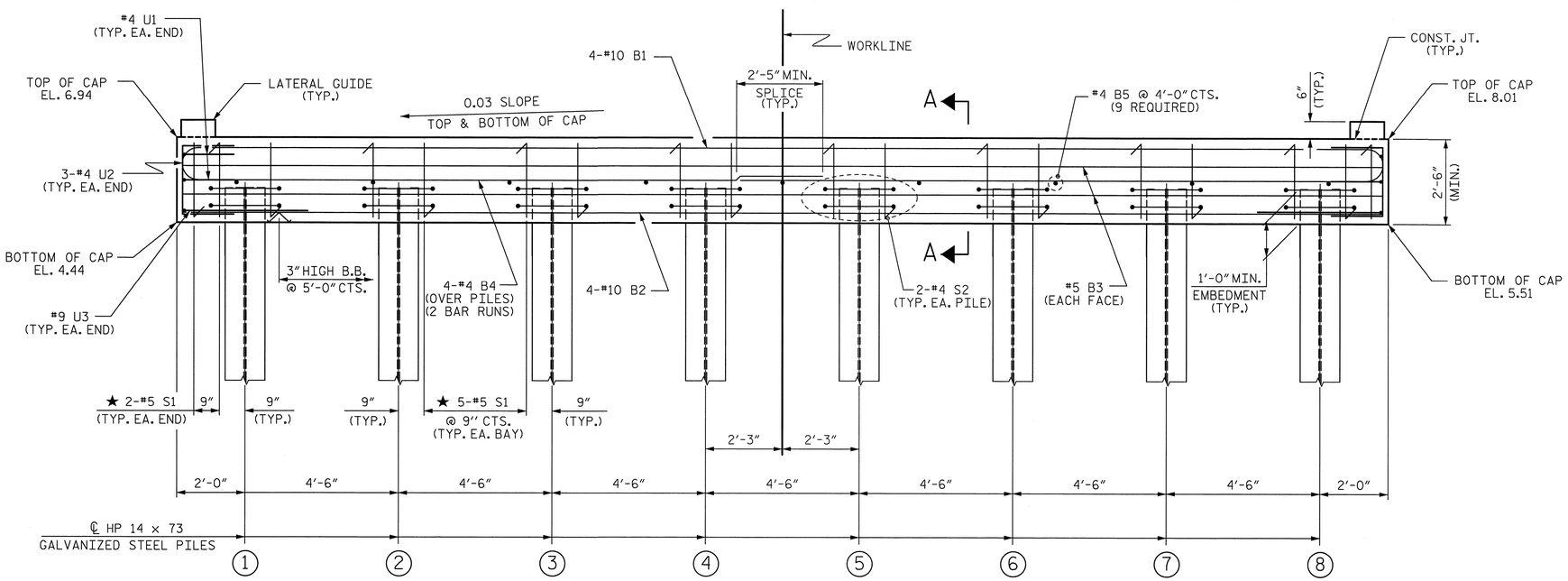

ELEVATION

FOR SECTION A-A, SEE SHEET 2 OF 2

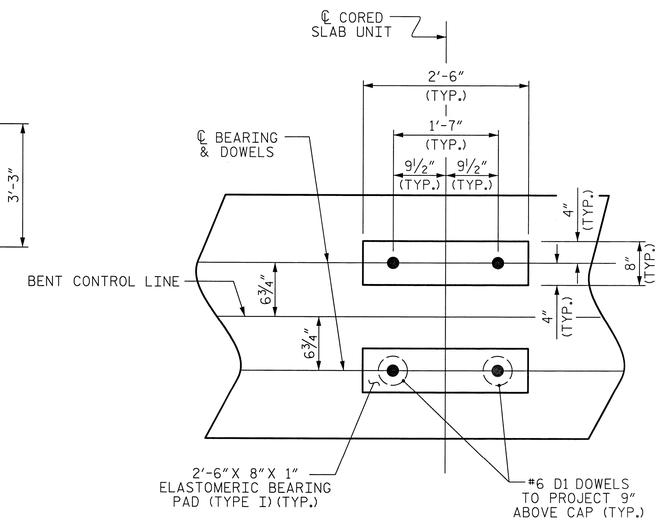

DETAIL "A"

(DIMENSIONS ARE TYPICAL EACH BEARING)

TOP OF PILE ELEVATIONS	
1	5.50
2	5.63
3	5.77
4	5.90
5	6.04
6	6.17
7	6.31
8	6.44

PROJECT NO. 17BP.1.R.16

GATES COUNTY

STATION: 13+63.50 -L-

SHEET 1 OF 2

STATE OF NORTH CAROLINA
DEPARTMENT OF TRANSPORTATION
RALEIGH

SUBSTRUCTURE

BENT No. 2

REVISIONS						SHEET NO.
NO.	BY:	DATE:	NO.	BY:	DATE:	23
1			3			TOTAL SHEETS
2			4			30

ASSEMBLED BY : K.H. COMPTON DATE : 8/14/12
CHECKED BY : R.L. WHITCHER DATE : 8/22/12

DRAWN BY : DGE 05/10
CHECKED BY : MKT 05/10

Prepared by
URS
URS Corporation - North Carolina
1600 Perimeter Park Drive, Suite 400
Morrisville, NC 27560
PHONE: (919) 461-1100 FAX: (919) 461-1415
NC LIC.# C-2243

NORTH CAROLINA PROFESSIONAL SEAL 025953 ENGINEER CARLDON HALL, JR. 10/31/12

10/31/2012
P:\Jobs1\Group A Bridge Replacements\Gates Bridge 025\Structures\Final Drawings\360025_SD_B2_1.dgn
kyle_compton

STD. NO. 14" HP_BT_33_90S_<60'

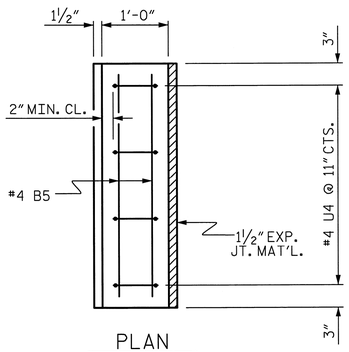

PLAN

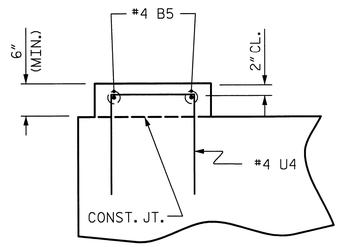

ELEVATION

LATERAL GUIDE DETAILS

(LEFT LATERAL GUIDE SHOWN, RIGHT SIDE SIMILAR)

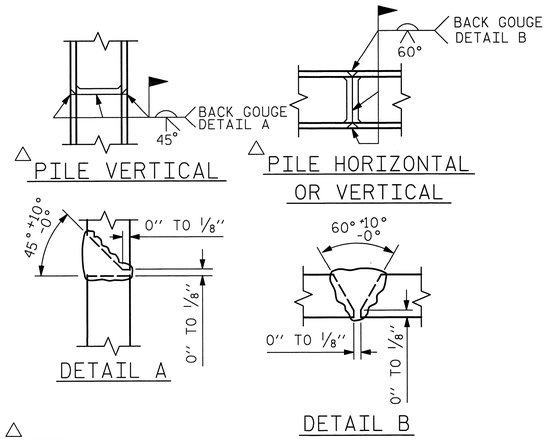

△ PILE VERTICAL

△ PILE HORIZONTAL OR VERTICAL

DETAIL A

DETAIL B

△ POSITION OF PILE DURING WELDING.

PILE SPLICE DETAILS

BAR TYPES

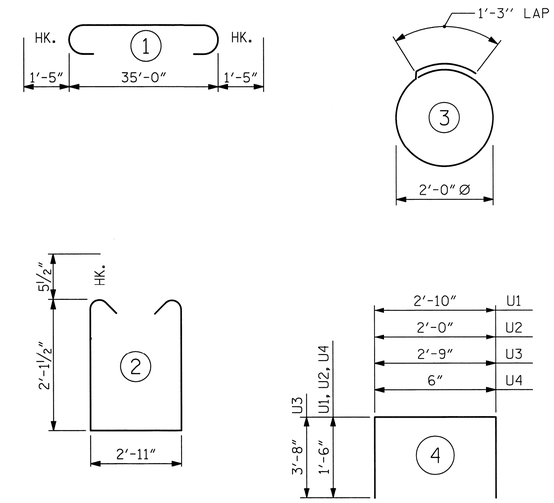

ALL BAR DIMENSIONS ARE OUT TO OUT.

BILL OF MATERIAL

FOR ONE BENT

BAR	NO.	SIZE	TYPE	LENGTH	WEIGHT
B1	4	#10	1	37'-10"	651
B2	4	#10	STR	35'-2"	605
B3	4	#5	STR	35'-2"	147
B4	8	#4	STR	18'-10"	101
B5	13	#4	STR	2'-11"	25
D1	44	#6	STR	1'-6"	99
S1	39	#5	2	8'-1"	329
S2	16	#4	3	7'-7"	81
U1	4	#4	4	5'-10"	16
U2	6	#4	4	5'-0"	20
U3	2	#9	4	10'-1"	69
U4	8	#4	4	3'-6"	19

REINFORCING STEEL (FOR ONE BENT) 2162 LBS

CLASS A CONCRETE BREAKDOWN (FOR ONE BENT)

POUR #1 (CAP) 10.7 C.Y.

POUR #2 (LATERAL GUIDES) 0.1 C.Y.

TOTAL CLASS A CONCRETE 10.8 C.Y.

HP 14 X 73 ~~GALVANIZED~~ STEEL PILES (FOR ONE BENT)

No. 8 LIN. FT. 800

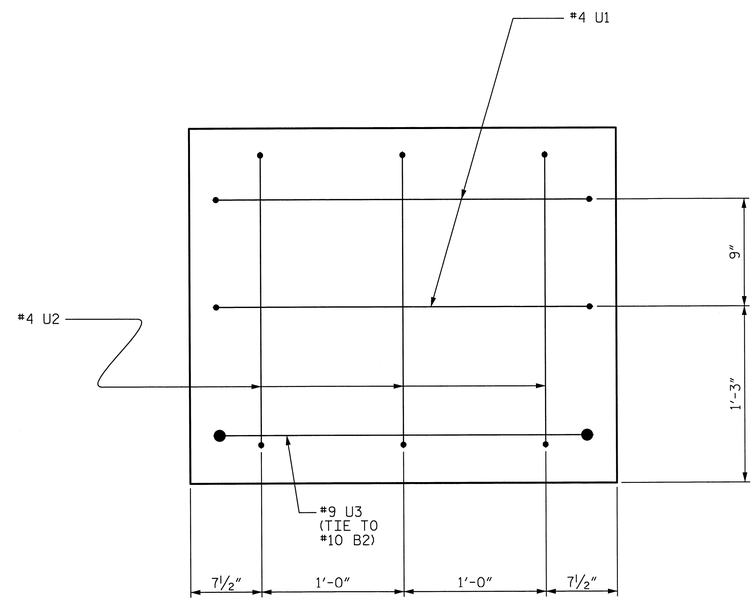

END OF CAP VIEW

(TYPICAL BOTH ENDS)

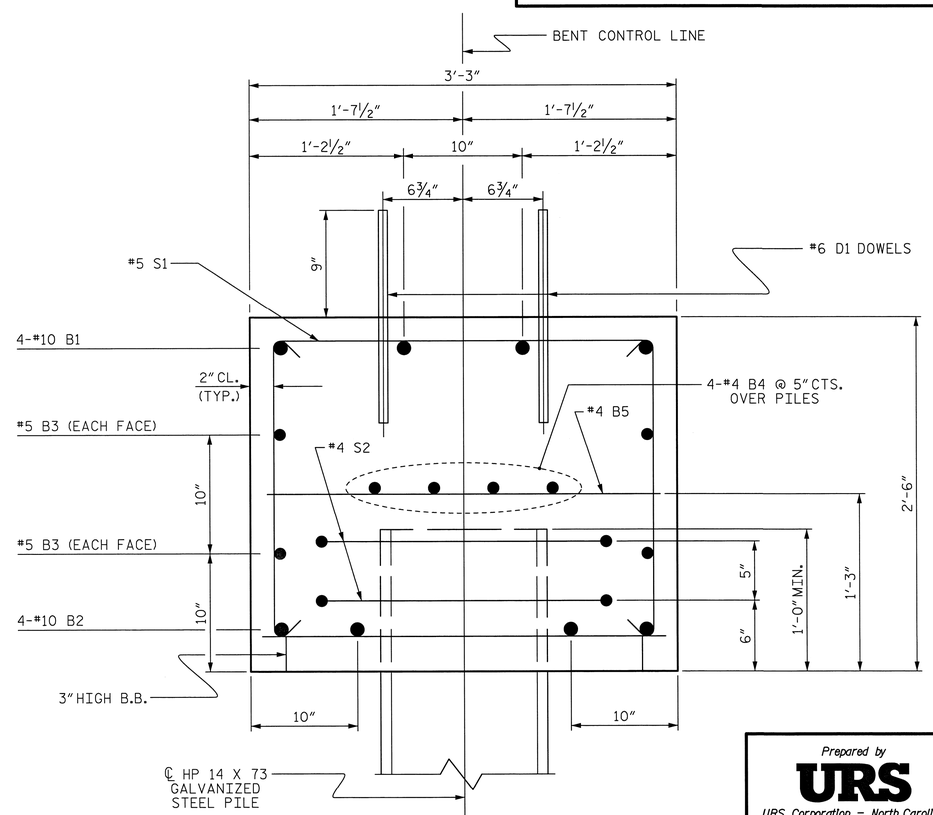

SECTION A-A

PROJECT NO. 17BP.1.R.16

GATES COUNTY

STATION: 13+63.50 -L-

SHEET 2 OF 2

STATE OF NORTH CAROLINA
DEPARTMENT OF TRANSPORTATION
RALEIGH

SUBSTRUCTURE

BENT No. 2

Prepared by
URS
URS Corporation – North Carolina
1600 Perimeter Park Drive, Suite 400
Morrisville, NC 27560
PHONE: (919) 461-1100 FAX: (919) 461-1415
NC LIC.# C-2243

NORTH CAROLINA PROFESSIONAL SEAL 5953 ENGINEER J. CARLDON HALL, JR. 10/31/12

DRAWN BY : K.H. COMPTON	DATE : 8/14/12		
CHECKED BY : R.L. WHITCHER	DATE : 8/22/12		
DRAWN BY : DGE 05/10			
CHECKED BY : MKT 05/10			

REVISIONS							SHEET NO.
NO.	BY:	DATE:	NO.	BY:	DATE:		24
1			3				TOTAL SHEETS
2			4				30

10/31/2012
P:\Jobs1\Group A Bridge Replacements\Gates Bridge 025\Structures\FinalDrawings\360025_SD_B2_2.dgn
kyle.compton

STD. NO. 14" HP_BT_33_90S_<60'

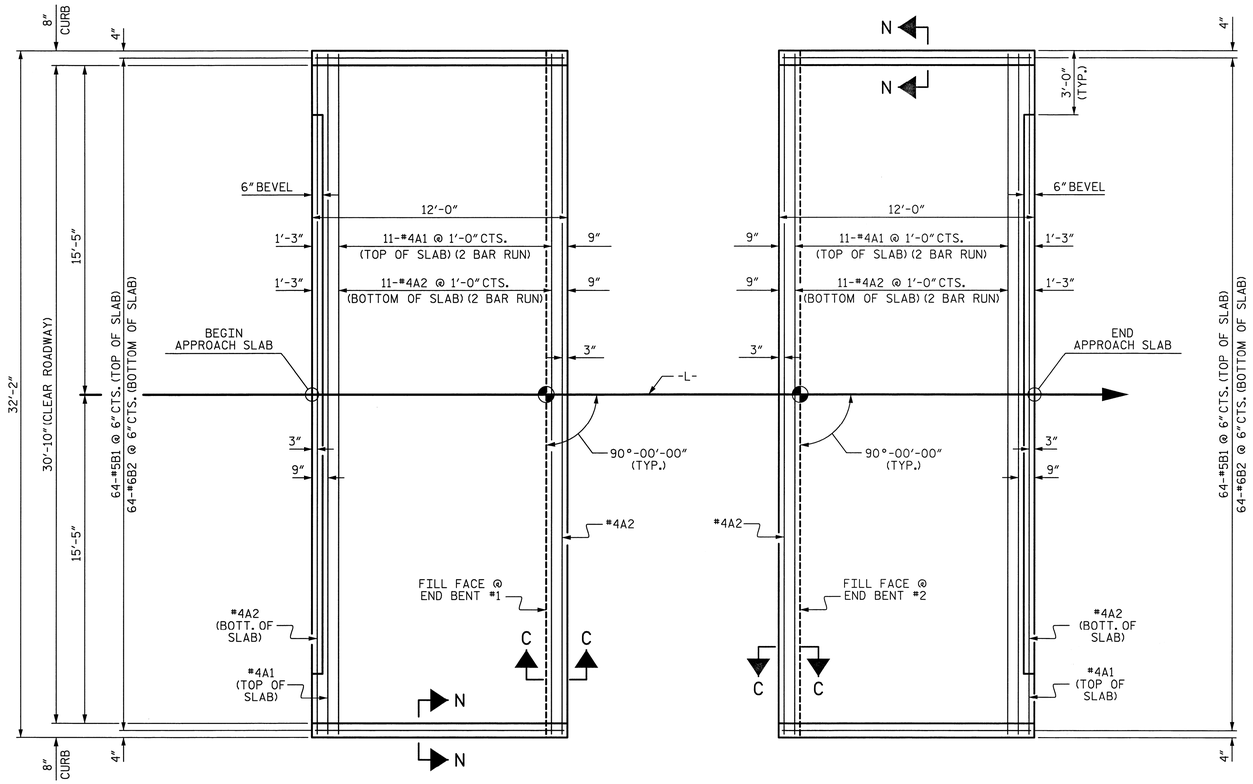

PLAN @ END BENT #1

PLAN @ END BENT #2

DIMENSIONS SHOWN ARE TYPICAL FOR BOTH APPROACH SLABS

NOTES

FOR REINFORCED BRIDGE APPROACH FILL INCLUDING GEOTEXTILE, IMPERMEABLE GEOMEMBRANE, 4" Ø DRAINAGE PIPE, #78M STONE, AND SELECT MATERIAL, SEE ROADWAY PLANS.

AREA BETWEEN THE WINGWALL AND APPROACH SLAB SHALL BE GRADED TO DRAIN THE WATER AWAY FROM THE FILL FACE OF THE BRIDGE AND SHALL BE PAVED. SEE ROADWAY PLANS.

APPROACH SLAB GROOVING IS REQUIRED.

FOR FOAM JOINT SEALS, SEE SPECIAL PROVISIONS.

FOR ELASTOMERIC CONCRETE, SEE SPECIAL PROVISIONS.

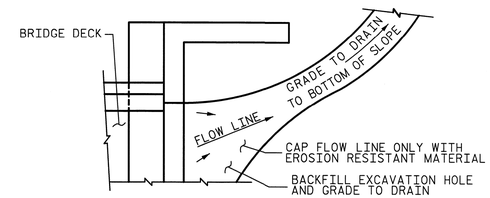

NOTE: IF THE APPROACH SLAB IS NOT CONSTRUCTED IMMEDIATELY AFTER THE BACKFILLING OF THE END BENT EXCAVATION, GRADE TO DRAIN TO THE BOTTOM OF THE SLOPE AND PROVIDE EROSION RESISTANT MATERIAL, SUCH AS FIBERGLASS ROVING OR AS DIRECTED BY THE ENGINEER TO PREVENT SOIL EROSION AND TO PROTECT THE AREA ADJACENT TO THE STRUCTURE. THE CONTRACTOR WILL BE REQUIRED TO REMOVE THESE MATERIALS PRIOR TO CONSTRUCTION OF THE APPROACH SLAB.

TEMPORARY DRAINAGE DETAIL

SPLICE LENGTHS		
BAR SIZE	EPOXY COATED	UNCOATED
#4	2'-0"	1'-9"
#5	2'-6"	2'-2"
#6	3'-10"	2'-7"

BILL OF MATERIAL

APPROACH SLAB AT EB #1

BAR	NO.	SIZE	TYPE	LENGTH	WEIGHT
✱ A1	24	#4	STR	16'-11"	271
A2	26	#4	STR	16'-9"	291
✱ B1	64	#5	STR	11'-0"	734
B2	64	#6	STR	11'-8"	1121
REINFORCING STEEL				LBS.	1412
✱ EPOXY COATED REINFORCING STEEL				LBS.	1005
CLASS AA CONCRETE				C. Y.	19.9

APPROACH SLAB AT EB #2

BAR	NO.	SIZE	TYPE	LENGTH	WEIGHT
✱ A1	24	#4	STR	16'-11"	271
A2	26	#4	STR	16'-9"	291
✱ B1	64	#5	STR	11'-0"	734
B2	64	#6	STR	11'-8"	1121
REINFORCING STEEL				LBS.	1412
✱ EPOXY COATED REINFORCING STEEL				LBS.	1005
CLASS AA CONCRETE				C. Y.	19.9

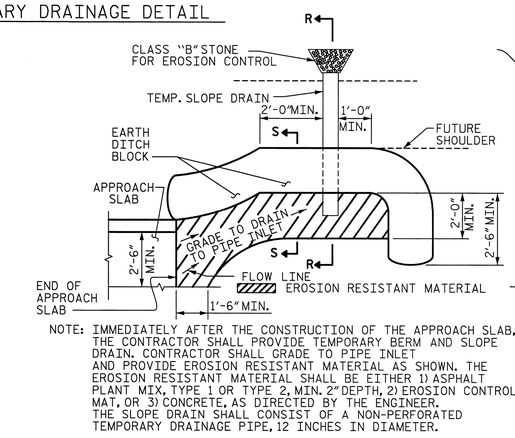

NOTE: IMMEDIATELY AFTER THE CONSTRUCTION OF THE APPROACH SLAB, THE CONTRACTOR SHALL PROVIDE TEMPORARY BERM AND SLOPE DRAIN. CONTRACTOR SHALL GRADE TO PIPE INLET AND PROVIDE EROSION RESISTANT MATERIAL AS SHOWN. THE EROSION RESISTANT MATERIAL SHALL BE EITHER 1) ASPHALT PLANT MIX, TYPE 1 OR TYPE 2, MIN. 2" DEPTH, 2) EROSION CONTROL MAT, OR 3) CONCRETE, AS DIRECTED BY THE ENGINEER. THE SLOPE DRAIN SHALL CONSIST OF A NON-PERFORATED TEMPORARY DRAINAGE PIPE, 12 INCHES IN DIAMETER.

PLAN VIEW

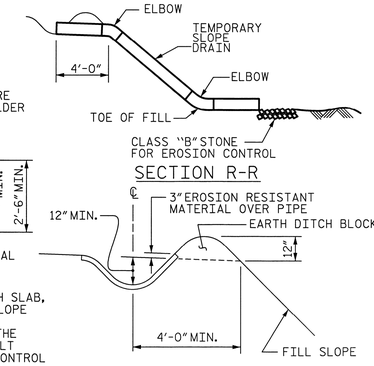

SECTION R-R

SECTION S-S

TEMPORARY BERM AND SLOPE DRAIN DETAILS

(TO BE USED WHEN SHOULDER BERM GUTTER IS REQUIRED)

ELASTOMERIC CONCRETE	
END BENT NO.	ELASTOMERIC CONCRETE ✱ (CU. FT.)
1	10.2
2	10.2
TOTAL	20.4

✱ BASED ON THE MINIMUM BLOCKOUT SHOWN.

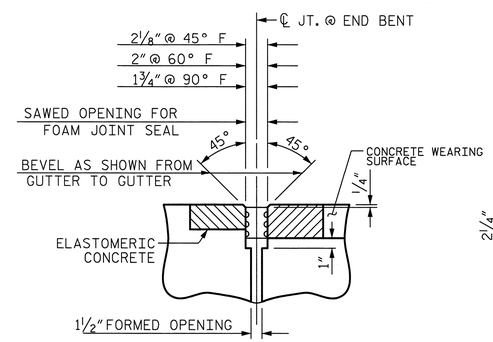

SECTION C-C

FOAM JOINT SEAL (EXPANSION)

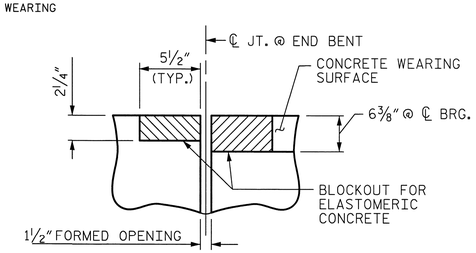

SECTION C-C

FOAM JOINT SEAL (PRE-SAWED ELASTOMERIC CONCRETE DIMENSIONS)

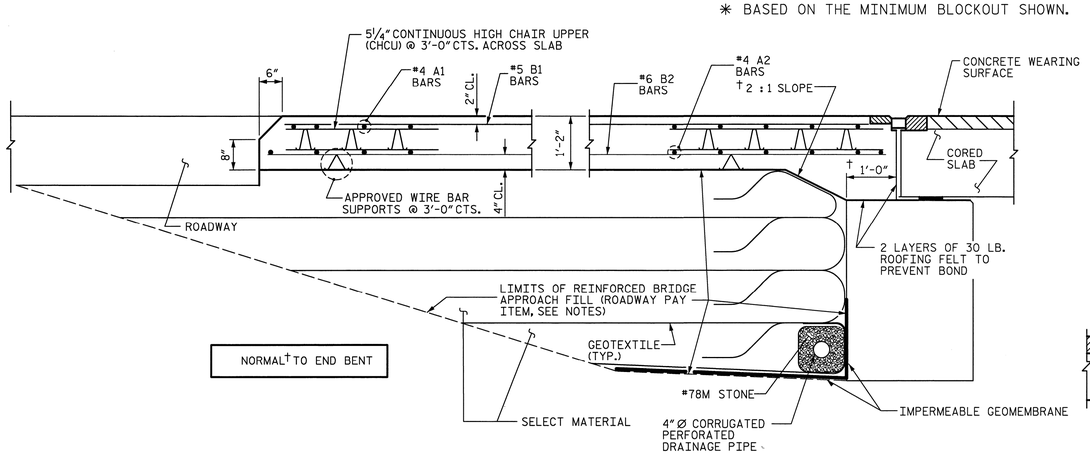

SECTION THRU SLAB

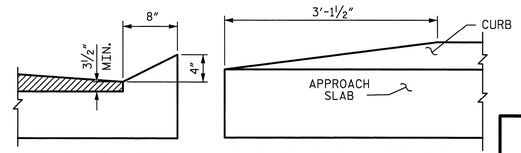

SECTION N-N

END OF CURB WITHOUT SHOULDER BERM GUTTER

CURB DETAILS

PROJECT NO. 17BP.1.R.16

GATES COUNTY

STATION: 13+63.50 -L-

STATE OF NORTH CAROLINA
DEPARTMENT OF TRANSPORTATION
RALEIGH

STANDARD
BRIDGE APPROACH SLAB
FOR PRESTRESSED CONCRETE
CORED SLAB UNIT
(SUB-REGIONAL TIER)
90° SKEW

Prepared by
URS
URS Corporation - North Carolina
1600 Perimeter Park Drive, Suite 400
Morrisville, NC 27560
PHONE: (919) 461-1100 FAX: (919) 461-1415
NC LIC.# C-2243

NORTH CAROLINA PROFESSIONAL SEAL ENGINEER 5953 CARLDON HALL JR. 10/31/12

REVISIONS						SHEET NO.
NO.	BY:	DATE:	NO.	BY:	DATE:	25
1			3			TOTAL SHEETS
2			4			30

ASSEMBLED BY : K.H. COMPTON DATE : 8/14/12
CHECKED BY : R.L. WHITCHER DATE : 8/22/12
DRAWN BY : SHS/MAA 5-09
CHECKED BY : BCH 5-09
REV. 12-11 MAA/AAC

10/31/2012
P:\Jobs\\Group A Bridge Replacements\Gates Bridge 025\Structures\Final Drawings\360025_SD_AS.dgn
kyle.compton

STD. NO. BAS_33_90S

STANDARD NOTES

DESIGN DATA:

SPECIFICATIONS	A.A.S.H.T.O. (CURRENT)
LIVE LOAD	SEE PLANS
IMPACT ALLOWANCE	SEE A.A.S.H.T.O.
STRESS IN EXTREME FIBER OF	
STRUCTURAL STEEL - AASHTO M270 GRADE 36	20,000 LBS. PER SQ. IN.
- AASHTO M270 GRADE 50W	27,000 LBS. PER SQ. IN.
- AASHTO M270 GRADE 50	27,000 LBS. PER SQ. IN.
REINFORCING STEEL IN TENSION	
GRADE 60	24,000 LBS. PER SQ. IN.
CONCRETE IN COMPRESSION	1,200 LBS. PER SQ. IN.
CONCRETE IN SHEAR	SEE A.A.S.H.T.O.
STRUCTURAL TIMBER - TREATED OR	
UNTREATED - EXTREME FIBER STRESS	1,800 LBS. PER SQ. IN.
COMPRESSION PERPENDICULAR TO GRAIN OF TIMBER	375 LBS. PER SQ. IN.
EQUIVALENT FLUID PRESSURE OF EARTH	30 LBS. PER CU. FT. (MINIMUM)

MATERIAL AND WORKMANSHIP:

EXCEPT AS MAY OTHERWISE BE SPECIFIED ON PLANS OR IN THE SPECIAL PROVISIONS, ALL MATERIAL AND WORKMANSHIP SHALL BE IN ACCORDANCE WITH THE 2012 "STANDARD SPECIFICATIONS FOR ROADS AND STRUCTURES" OF THE N. C. DEPARTMENT OF TRANSPORTATION.

STEEL SHEET PILING FOR PERMANENT OR TEMPORARY APPLICATIONS SHALL BE HOT ROLLED.

CONCRETE:

UNLESS OTHERWISE REQUIRED ON PLANS, CLASS A CONCRETE SHALL BE USED FOR ALL PORTIONS OF ALL STRUCTURES WITH THE EXCEPTION THAT: CLASS AA CONCRETE SHALL BE USED IN BRIDGE SUPERSTRUCTURES, ABUTMENT BACKWALLS, AND APPROACH SLABS; AND CLASS B CONCRETE SHALL BE USED FOR SLOPE PROTECTION AND RIP RAP.

CONCRETE CHAMFERS:

UNLESS OTHERWISE NOTED ON THE PLANS, ALL EXPOSED CORNERS ON STRUCTURES SHALL BE CHAMFERED 3/4" WITH THE FOLLOWING EXCEPTIONS: TOP CORNERS OF CURBS MAY BE ROUNDED TO 1-1/2" RADIUS WHICH IS BUILT INTO CURB FORMS; CORNERS OF TRANSVERSE FLOOR EXPANSION JOINTS SHALL BE ROUNDED WITH A 1/4" FINISHING TOOL UNLESS OTHERWISE REQUIRED ON PLANS; AND CORNERS OF EXPANSION JOINTS IN THE ROADWAY FACES AND TOPS OF CURBS AND SIDEWALKS SHALL BE ROUNDED TO A 1/4" RADIUS WITH A FINISHING STONE OR TOOL UNLESS OTHERWISE REQUIRED ON PLANS.

DOWELS:

DOWELS WHEN INDICATED ON PLANS AS FOR CULVERT EXTENSIONS, SHALL BE EMBEDDED AT LEAST 12" INTO THE OLD CONCRETE AND GROUTED INTO PLACE WITH 1:2 CEMENT MORTAR.

ALLOWANCE FOR DEAD LOAD DEFLECTION, SETTLEMENT, ETC. IN CASTING SUPERSTRUCTURES:

BRIDGES SHALL BE BUILT ON THE GRADE OR VERTICAL CURVE SHOWN ON PLANS. SLABS, CURBS AND PARAPETS SHALL CONFORM TO THE GRADE OR CURVE.

ALL DIMENSIONS WHICH ARE GIVEN IN SECTION AND ARE AFFECTED BY DEAD LOAD DEFLECTIONS ARE DIMENSIONS AT CENTER LINE OF BEARING UNLESS OTHERWISE NOTED ON PLANS. IN SETTING FORMS FOR STEEL BEAM BRIDGES AND PRESTRESSED CONCRETE GIRDER BRIDGES, ADJUSTMENTS SHALL BE MADE DUE TO THE DEAD LOAD DEFLECTIONS FOR THE ELEVATIONS SHOWN. WHERE BLOCKS ARE SHOWN OVER BEAMS FOR BUILDING UP TO THE SLAB, THE VERTICAL DIMENSIONS OF THE BLOCKS SHALL BE ADJUSTED BETWEEN BEARINGS TO COMPENSATE FOR DEAD LOAD DEFLECTIONS, VERTICAL CURVE ORDINATE, AND ACTUAL BEAM CAMBER. WHERE BOTTOM OF SLAB IS IN LINE WITH BOTTOM OF TOP FLANGES, DEPTH OF SLAB BETWEEN BEARINGS SHALL BE ADJUSTED TO COMPENSATE FOR DEAD LOAD DEFLECTION, VERTICAL CURVE ORDINATE, AND ACTUAL BEAM CAMBER.

IN SETTING FALSEWORK AND FORMS FOR REINFORCED CONCRETE SPANS, AN ALLOWANCE SHALL BE MADE FOR DEAD LOAD DEFLECTIONS, SETTLEMENT OF FALSEWORK, AND PERMANENT CAMBER WHICH SHALL BE PROVIDED FOR IN ADDITION TO THE ELEVATIONS SHOWN. AFTER REMOVAL OF THE FALSEWORK, THE FINISHED STRUCTURES SHALL CONFORM TO THE PROFILE AND ELEVATIONS SHOWN ON THE PLANS AND CONSTRUCTION ELEVATIONS FURNISHED BY THE ENGINEER.

DETAILED DRAWINGS FOR FALSEWORK OR FORMS FOR BRIDGE SUPERSTRUCTURE AND ANY STRUCTURE OR PARTS OF A STRUCTURE AS NOTED ON THE PLANS SHALL BE SUBMITTED TO THE ENGINEER FOR APPROVAL BEFORE CONSTRUCTION OF THE FALSEWORK OR FORMS IS STARTED.

REINFORCING STEEL:

ALL REINFORCING STEEL SHALL BE DEFORMED. DIMENSIONS RELATIVE TO PLACEMENT OF REINFORCING ARE TO CENTERS OF BARS UNLESS OTHERWISE INDICATED IN THE PLANS. DIMENSIONS ON BAR DETAILS ARE TO CENTERS OF BARS OR ARE OUT TO OUT AS INDICATED ON PLANS.

WIRE BAR SUPPORTS SHALL BE PROVIDED FOR REINFORCING STEEL WHERE INDICATED ON THE PLANS. WHEN BAR SUPPORT PIECES ARE PLACED IN CONTINUOUS LINES, THEY SHALL BE SO PLACED THAT THE ENDS OF THE SUPPORTING WIRES SHALL BE LAPPED TO LOCK LEGS ON ADJOINING PIECES.

STRUCTURAL STEEL:

AT THE CONTRACTOR'S OPTION, HE MAY SUBSTITUTE 7/8" Ø SHEAR STUDS FOR THE 3/4" Ø STUDS SPECIFIED ON THE PLANS. THIS SUBSTITUTION SHALL BE MADE AT THE RATE OF 3 - 7/8" Ø STUDS FOR 4 - 3/4" Ø STUDS, AND STUD SPACING CHANGES SHALL BE MADE AS NECESSARY TO PROVIDE THE SAME EQUIVALENT NUMBER OF 7/8" Ø STUDS ALONG THE BEAM AS SHOWN FOR 3/4" Ø STUDS BASED ON THE RATIO OF 3 - 7/8" Ø STUDS FOR 4 - 3/4" Ø STUDS. STUDS OF THE LENGTH SPECIFIED ON THE PLANS MUST BE PROVIDED. THE MAXIMUM SPACING SHALL BE 2'-0".

EXCEPT AT THE INTERIOR SUPPORTS OF CONTINUOUS BEAMS WHERE THE COVER PLATE IS IN CONTACT WITH BEARING PLATE, THE CONTRACTOR MAY, AT HIS OPTION, SUBSTITUTE FOR THE COVER PLATES DESIGNATED ON THE PLANS COVER PLATES OF THE EQUIVALENT AREA PROVIDED THESE PLATES ARE AT LEAST 5/16" IN THICKNESS AND DO NOT EXCEED A WIDTH EQUAL TO THE FLANGE WIDTH LESS 2" OR A THICKNESS EQUAL TO 2 TIMES THE FLANGE THICKNESS. THE SIZE OF FILLET WELDS SHALL CONFORM TO THE REQUIREMENTS OF THE CURRENT ANSI/AASHTO/AWS "BRIDGE WELDING CODE". ELECTROSLAG WELDING WILL NOT BE PERMITTED.

WITH THE SOLE EXCEPTION OF EDGES AT SURFACES WHICH BEAR ON OTHER SURFACES, ALL SHARP EDGES AND ENDS OF SHAPES AND PLATES SHALL BE SLIGHTLY ROUNDED BY SUITABLE MEANS TO A RADIUS OF APPROXIMATELY 1/16 INCH OR EQUIVALENT FLAT SURFACE AT A SUITABLE ANGLE PRIOR TO PAINTING, GALVANIZING, OR METALLIZING.

HANDRAILS AND POSTS:

METAL STANDARDS AND FACES OF THE CONCRETE END POSTS FOR THE METAL RAIL SHALL BE SET NORMAL TO THE GRADE OF THE CURB, UNLESS OTHERWISE SHOWN ON PLANS. THE METAL RAIL AND TOPS OF CONCRETE POSTS USED WITH THE ALUMINUM RAIL SHALL BE BUILT PARALLEL TO THE GRADE OF THE CURB.

METAL HANDRAILS SHALL BE IN ACCORDANCE WITH THE PLANS. RAILS SHALL BE AS MANUFACTURED FOR BRIDGE RAILING. CASTINGS SHALL BE OF A UNIFORM APPEARANCE. FINS AND OTHER DEFORMATIONS RESULTING FROM CASTING OR OTHERWISE SHALL BE REMOVED IN A MANNER SO THAT A UNIFORM COLORING OF THE COMPLETED CASTING SHALL BE OBTAINED. CASTINGS WITH DISCOLORATIONS OR OF NON-UNIFORM COLORING WILL NOT BE ACCEPTED. CERTIFIED MILL REPORTS ARE REQUIRED FOR METAL RAILS AND POSTS.

SPECIAL NOTES:

GENERALLY, IN CASE OF DISCREPANCY, THIS STANDARD SHEET OF NOTES SHALL GOVERN OVER THE SPECIFICATIONS, BUT THE REMAINDER OF THE PLANS SHALL GOVERN OVER NOTES HEREON, AND SPECIAL PROVISIONS SHALL GOVERN OVER ALL. SEE SPECIFICATIONS ARTICLE 105-4.

ENGLISH

JANUARY, 1990

DIVISION OF HIGHWAYS
STATE OF NORTH CAROLINA

SOIL STABILIZATION TIMEFRAMES

SITE DESCRIPTION	STABILIZATION TIME	TIMEFRAME EXCEPTIONS
PERIMETER DIKES, SWALES, DITCHES AND SLOPES	7 DAYS	NONE
HIGH QUALITY WATER (HQW) ZONES	7 DAYS	NONE
SLOPES STEEPER THAN 3:1	7 DAYS	IF SLOPES ARE 10' OR LESS IN LENGTH AND ARE NOT STEEPER THAN 2:1, 14 DAYS ARE ALLOWED.
SLOPES 3:1 OR FLATTER	14 DAYS	7 DAYS FOR SLOPES GREATER THAN 50' IN LENGTH.
ALL OTHER AREAS WITH SLOPES FLATTER THAN 4:1	14 DAYS	NONE, EXCEPT FOR PERIMETERS AND HQW ZONES.

WBS # 17BP.1.R.16

CONTRACT #:

PROJECT: 17BP.1.R.16
GATES COUNTY
STATION: 13+63.50 -L-
REPLACES BRIDGE NO. 360025

STATE OF NORTH CAROLINA
DEPARTMENT OF TRANSPORTATION
RALEIGH

BRIDGE ON NC 137 OVER COLE CREEK

30'-10" CLEAR ROADWAY - 90° SKEW

Prepared by
URS
URS Corporation - North Carolina
1600 Perimeter Park Drive, Suite 400
Morrisville, NC 27560
PHONE(919)461-1100 FAX(919)461-1415
NC LIC. # C-2243

REVISIONS						
NO.	BY:	DATE:	NO.	BY:	DATE:	
1			1			
2			2			

SHEET NO. EC-1
TOTAL SHEETS 30

WBS # 17BP.1.R.16

CONTRACT #:

EXIST BRIDGE NO. 360025
24'-0" CLEAR ROADWAY
SPANS: 5@25'
CONC. DECK ON STEEL GIRDERS
CONC. PILINGS W/ CONC. WINGWALLS

EROSION CONTROL PLAN

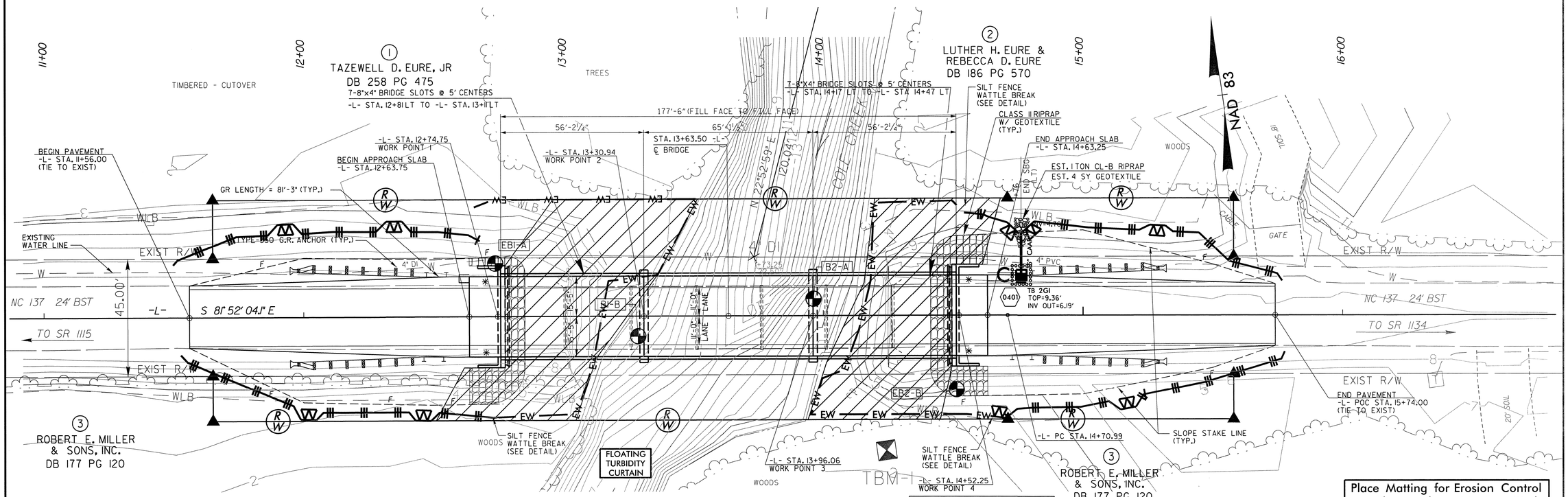

PLAN
SCALE: 1" = 20'

TBM: TBM-1
NAIL IN BASE OF 20" TUPELO GUM
51.96' RT OF -L- STA 14+24.30
ELEV. 2.85

Place Matting for Erosion Control on Slopes Adjacent to Permitted Wetlands as Work Allows.

NOTE:
PERIMETER EROSION CONTROL MEASURES SHALL BE INSTALLED DURING CLEARING AND GRUBBING PHASE.

ENVIRONMENTALLY SENSITIVE AREA
SEE PROJECT SPECIAL PROVISIONS

NOTE:
TEMPORARY SILT FENCE SHALL BE INSTALLED A MINIMUM OF 3 FEET FROM TOE OF FILL IN WETLAND AREAS

NOTES: ANY DEVIATION FROM OPTIONS GIVEN WILL REQUIRE PRIOR APPROVAL BY ENGINEER.

ADDITIONAL EROSION CONTROL DEVICES MAY NEED TO BE INSTALLED AS DIRECTED BY THE ENGINEER.

MEME A. DIAZ, P.E.
LEVEL IIIA NAME

675 EXP. 12/31/14
LEVEL IIIA CERTIFICATION NO.

THIS PROJECT HAS BEEN DESIGNED TO SENSITIVE WATERSHED STANDARDS.

CAMA JURISDICTIONAL WETLAND
PUBLIC TRUST WATERS
IN-WATER MORATORIUM FROM
FEBRUARY 15 THROUGH JUNE 30

METHOD II MODIFIED CLEARING

ROADSIDE ENVIRONMENTAL UNIT
DEPARTMENT OF TRANSPORTATION
DIVISION OF HIGHWAYS
RALEIGH, N.C.

2012 STANDARD SPECIFICATIONS

Std. #	Description	Symbol
1605.01	Temporary Silt Fence	
1606.01	Special Sediment Control Fence	
1632.03	Rock Inlet Sediment Trap Type C	C
N/A	Excelsior Wattle	— EW — EW —

MATTING FOR EROSION CONTROL

CONST SHEET NO.	LINE	FROM STATION	TO STATION	SIDE	ESTIMATE (SY)
1	-L-	11+76	12+88	RT	138
			SUBTOTAL		138
MISCELLANEOUS MATTING TO BE INSTALLED AS DIRECTED BY THE ENGINEER					14
				TOTAL	152
				SAY	150

THESE EROSION AND SEDIMENT CONTROL PLANS COMPLY WITH THE REGULATIONS SET FORTH BY THE NCG-010000 GENERAL CONSTRUCTION PERMIT EFFECTIVE AUGUST 3, 2011 ISSUED BY THE NORTH CAROLINA DEPARTMENT OF ENVIRONMENT AND NATURAL RESOURCES DIVISION OF WATER QUALITY.

NORTH CAROLINA PROFESSIONAL SEAL 035 ENGINEER MEME A. DIAZ
11/2/2012

Prepared by
URS
URS Corporation - North Carolina
1600 Perimeter Park Drive, Suite 400
Morrisville, NC 27560
PHONE: (919) 461-1100 FAX: (919) 461-1415
NC LIC.: C-2243

PROJECT: 17BP.1.R.16
GATES COUNTY
STATION: 13+63.50 -L-
REPLACES BRIDGE NO. 360025

STATE OF NORTH CAROLINA
DEPARTMENT OF TRANSPORTATION
RALEIGH

BRIDGE ON NC 137 OVER COLE CREEK

30'-10" CLEAR ROADWAY - 90° SKEW

REVISIONS						SHEET NO.
NO.	BY:	DATE:	NO.	BY:	DATE:	EC-2
1			1			TOTAL SHEETS
2			2			30

DRAWN BY: LHM DATE: 10/03/12
CHECKED BY: MAD DATE: 10/03/12

PROJECT REFERENCE NO.	SHEET NO.
17BP.1.R.16	29 OF 31
R/W SHEET NO.	
ROADWAY DESIGN ENGINEER	HYDRAULICS ENGINEER

COIR FIBER WATTLE DETAIL

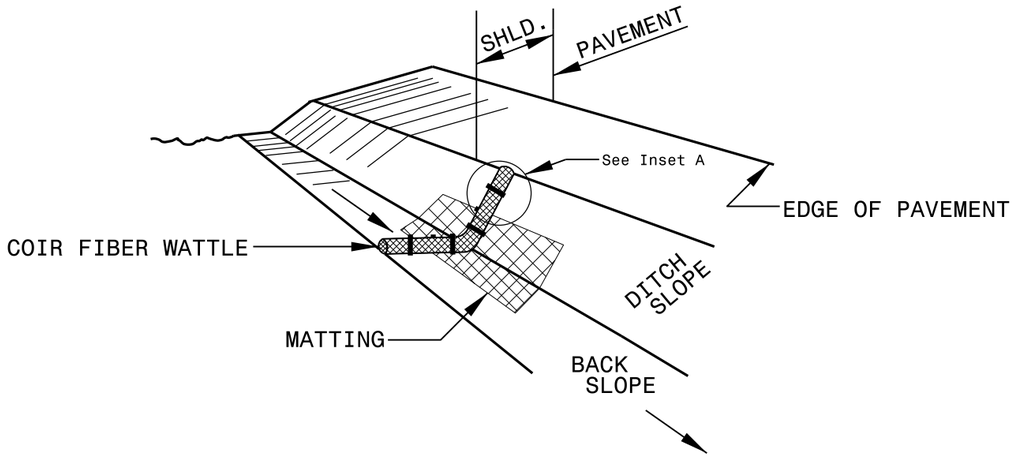

ISOMETRIC VIEW

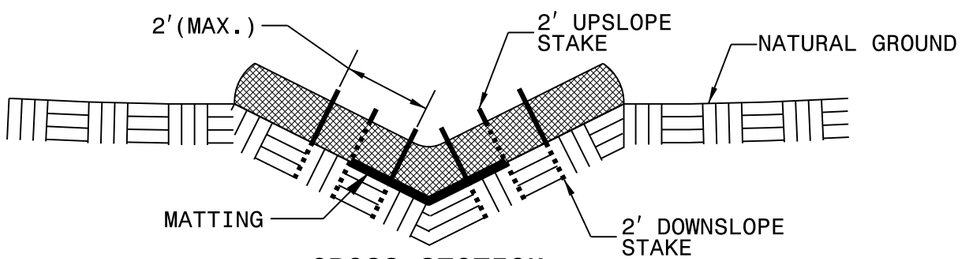

CROSS SECTION VEE DITCH

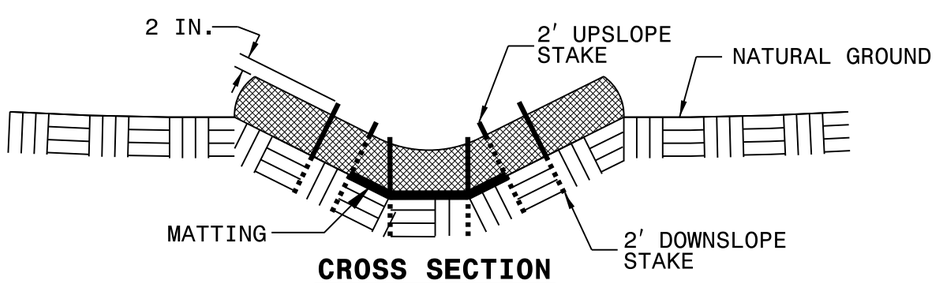

CROSS SECTION TRAPEZOIDAL DITCH

NOTES:

USE MINIMUM 12 IN. DIAMETER COIR FIBER (COCONUT FIBER) WATTLE.

USE 2 FT. WOODEN STAKES WITH A 2 IN. BY 2 IN. NOMINAL CROSS SECTION.

ONLY INSTALL WATTLE(S) TO A HEIGHT IN DITCH SO FLOW WILL NOT WASH AROUND WATTLE AND SCOUR DITCH SLOPES AND AS DIRECTED.

INSTALL A MINIMUM OF 2 UPSLOPE STAKES AND 4 DOWNSLOPE STAKES AT AN ANGLE TO WEDGE WATTLE TO BOTTOM OF DITCH.

PROVIDE STAPLES MADE OF 0.125 IN. DIAMETER STEEL WIRE FORMED INTO A U SHAPE NOT LESS THAN 12″ IN LENGTH.

INSTALL STAPLES APPROXIMATELY EVERY 1 LINEAR FOOT ON BOTH SIDES OF WATTLE AND AT EACH END TO SECURE IT TO THE SOIL.

INSTALL MATTING IN ACCORDANCE WITH SECTION 1631 OF THE STANDARD SPECIFICATIONS.

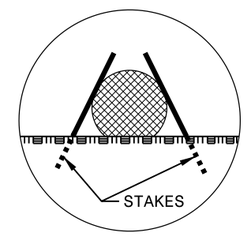

INSET A

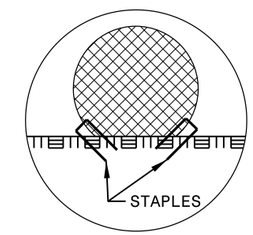

INSET B

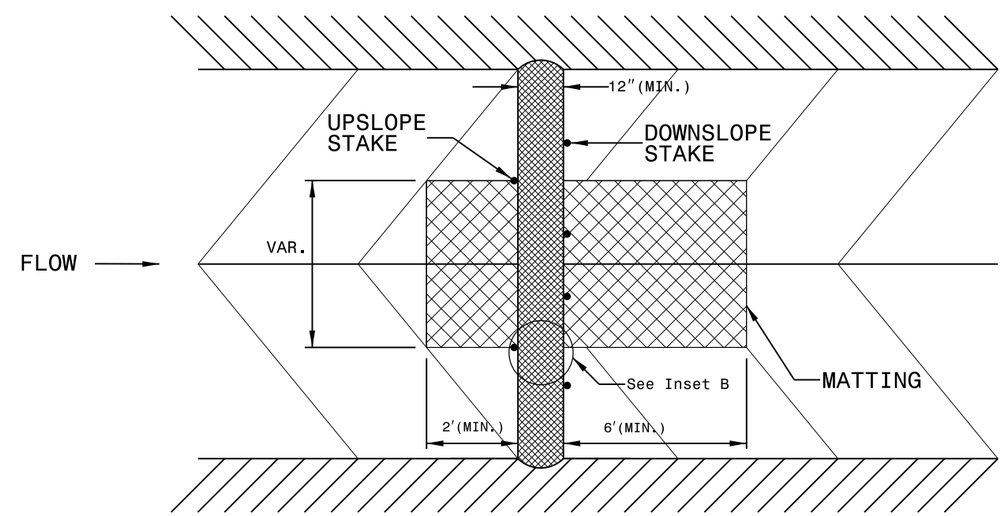

TOP VIEW

PROJECT REFERENCE NO.	SHEET NO.
17BP.1.R.16	30 OF 31
R/W SHEET NO.	
ROADWAY DESIGN ENGINEER	HYDRAULICS ENGINEER

COIR FIBER WATTLE BARRIER DETAIL

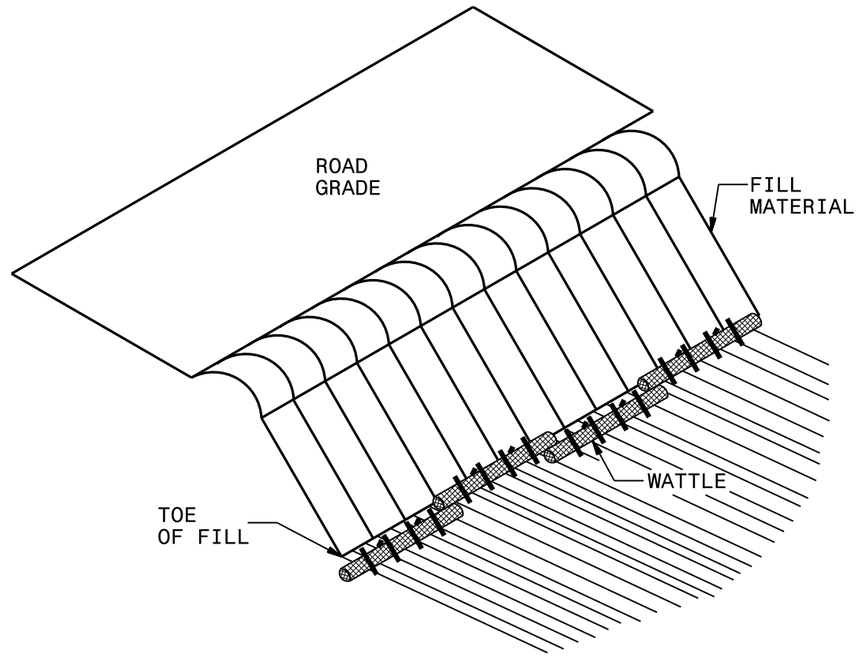

ISOMETRIC VIEW

NOTES:

USE MINIMUM 12 IN. DIAMETER COIR FIBER (COCONUT) WATTLE AND LENGTH OF 10 FT.

EXCAVATE A 1 TO 2 INCH TRENCH FOR WATTLE TO BE PLACED.

DO NOT PLACE WATTLES ON TOE OF SLOPE.

USE 2 FT. WOODEN STAKES WITH A 2 IN. BY 2 IN. NOMINAL CROSS SECTION.

INSTALL A MINIMUM OF 2 UPSLOPE STAKES AND 4 DOWNSLOPE STAKES AT AN ANGLE TO WEDGE WATTLE TO GROUND.

PROVIDE STAPLES MADE OF 0.125 IN. DIAMETER STEEL WIRE FORMED INTO A U SHAPE NOT LESS THAN 12″ IN LENGTH.

INSTALL STAPLES APPROXIMATELY EVERY 1 LINEAR FOOT ON BOTH SIDES OF WATTLE AND AT EACH END TO SECURE IT TO THE SOIL.

FOR BREAKS ALONG LARGE SLOPES, USE MAXIMUM SPACING OF 20 FT.

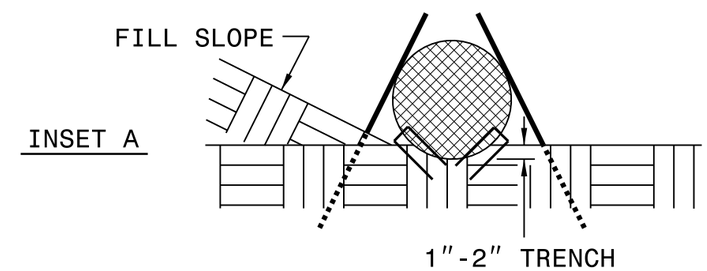

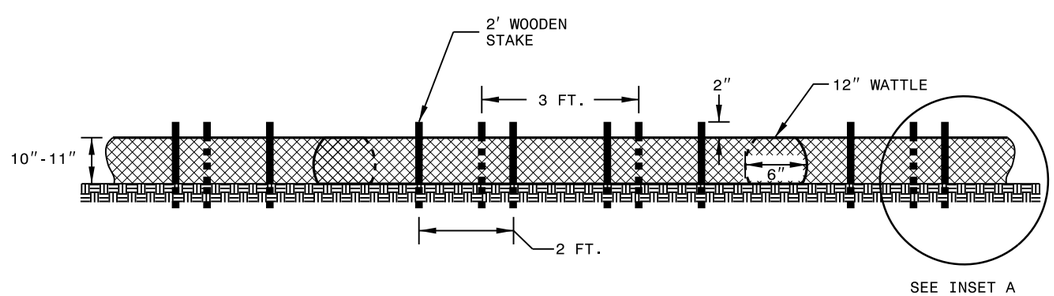

FRONT VIEW

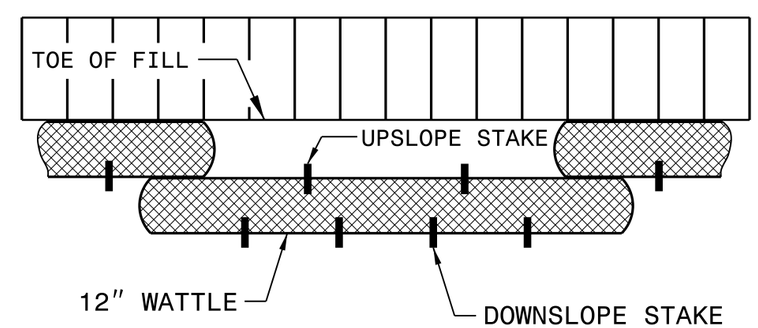

TOP VIEW

PROJECT REFERENCE NO.	SHEET NO.
17BP.1.R.16	31 OF 31
R/W SHEET NO.	
ROADWAY DESIGN ENGINEER	HYDRAULICS ENGINEER

SILT FENCE COIR FIBER WATTLE BREAK DETAIL

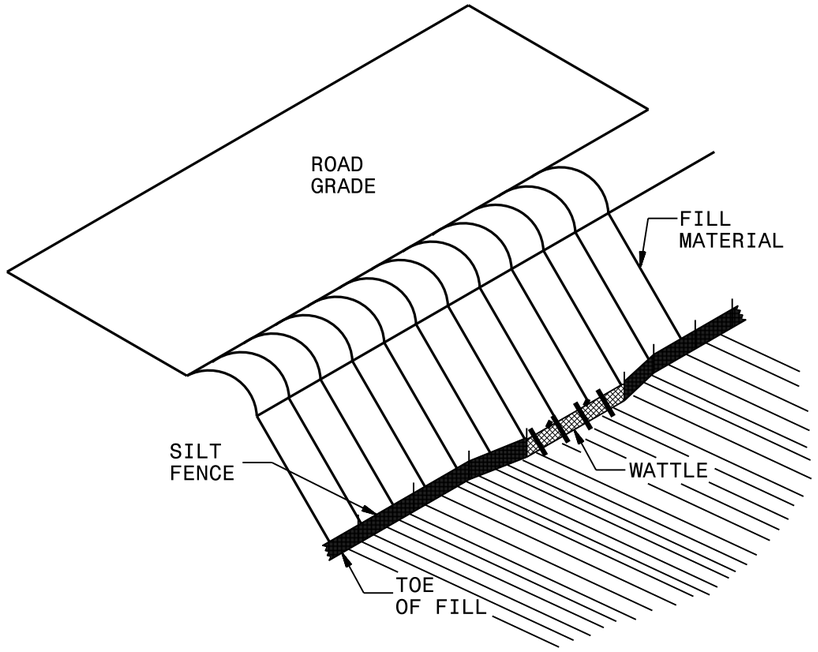

ISOMETRIC VIEW

NOTES:

USE MINIMUM 12 IN. DIAMETER COIR FIBER (COCONUT FIBER) WATTLE AND LENGTH OF 10 FT.

EXCAVATE A 1 TO 2 INCH TRENCH FOR WATTLE TO BE PLACED.

DO NOT PLACE WATTLE ON TOE OF SLOPE.

USE 2 FT. WOODEN STAKES WITH A 2 IN. BY 2 IN. NOMINAL CROSS SECTION.

INSTALL A MINIMUM OF 2 UPSLOPE STAKES AND 4 DOWNSLOPE STAKES AT AN ANGLE TO WEDGE WATTLE TO GROUND.

PROVIDE STAPLES MADE OF 0.125 IN. DIAMETER STEEL WIRE FORMED INTO A U SHAPE NOT LESS THAN 12″ IN LENGTH.

INSTALL STAPLES APPROXIMATELY EVERY 1 LINEAR FOOT ON BOTH SIDES OF WATTLE AND AT EACH END TO SECURE IT TO THE SOIL.

WATTLE INSTALLATION CAN BE ON OUTSIDE OF THE SILT FENCE AS DIRECTED.

INSTALL TEMPORARY SILT FENCE IN ACCORDANCE WITH SECTION 1605 OF THE STANDARD SPECIFICATIONS.

INSET A

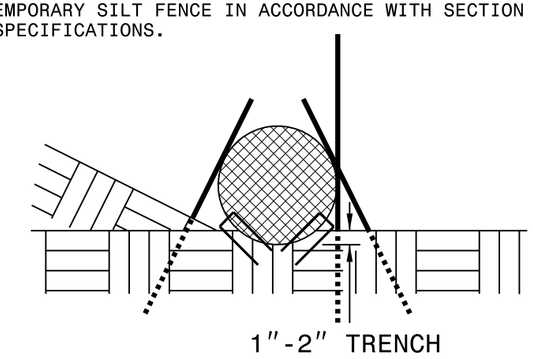

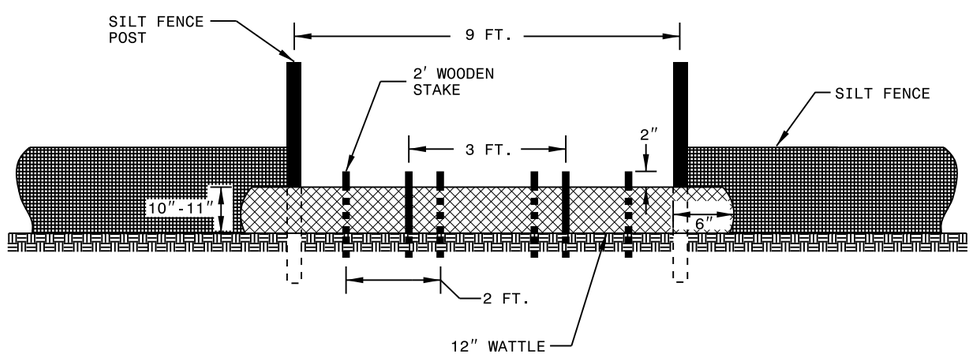

VIEW FROM SLOPE

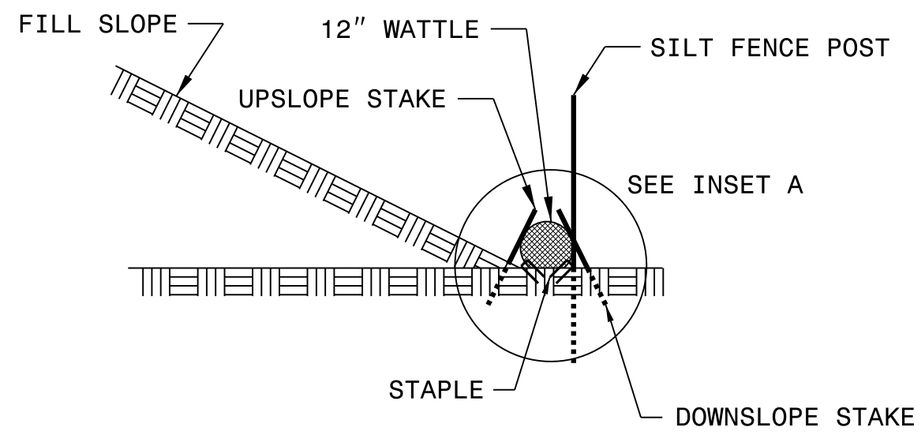

SIDE VIEW