WBS # 17BP.1.R.36

CONTRACT #

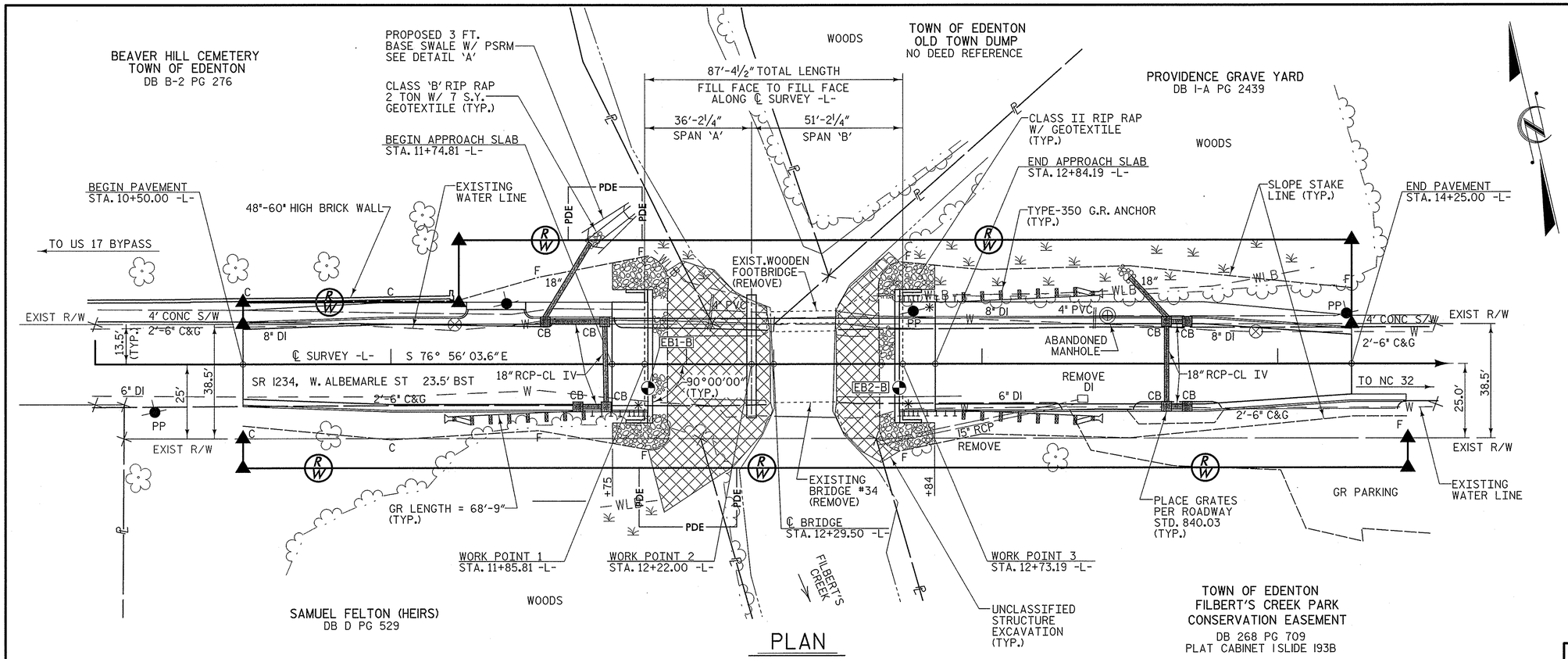

EXISTING BRIDGE No. 34
24'-0" CLEAR ROADWAY
SPANS: 1 @ 20'-6"
REINF. CONC. FLOOR ON I-BEAMS
END BENTS-
RC CAPS ON TIMBER PILES

TBM1
RR SPIKE IN BASE OF 18" WHITE OAK
40.80' LEFT OF -L- STA. 11+11.91
ELEV. 10.29

EXISTING UTILITIES TO BE RELOCATED BY OTHERS.

PLAN

SCALE: 1" = 20'

PI = 11+29.00	PI = 13+05.00	PI = 13+76.00
EL = 5.37'	EL = 4.85'	EL = 4.28'
VC = 157'	VC = 14'	VC = 98'
K = 49	K = 29	K = 49
D.S. = 35 mph	D.S. = 35 mph	D.S. = 35 mph
(-)3.5101% △ (-)0.3000%	(-)0.3000% △ (-)0.7903%	(-)0.7903% △ (+)1.1996%

GRADE DATA
-L- (SR 1234)

◐ DENOTES GEO-TECH BORE HOLE LOCATIONS.

* DENOTES TYPE III GUARDRAIL CONNECTION REQ'D. SEE "GUARDRAIL ANCHORAGE FOR VERTICAL CONCRETE BARRIER RAIL" SHEET.

NOTE: GUARDRAIL LENGTHS AS SHOWN INCLUDE ANCHOR UNITS.

FOR PAVEMENT LAYOUT & R/W LAYOUT SEE "ROADWAY DETAILS" SHEET.

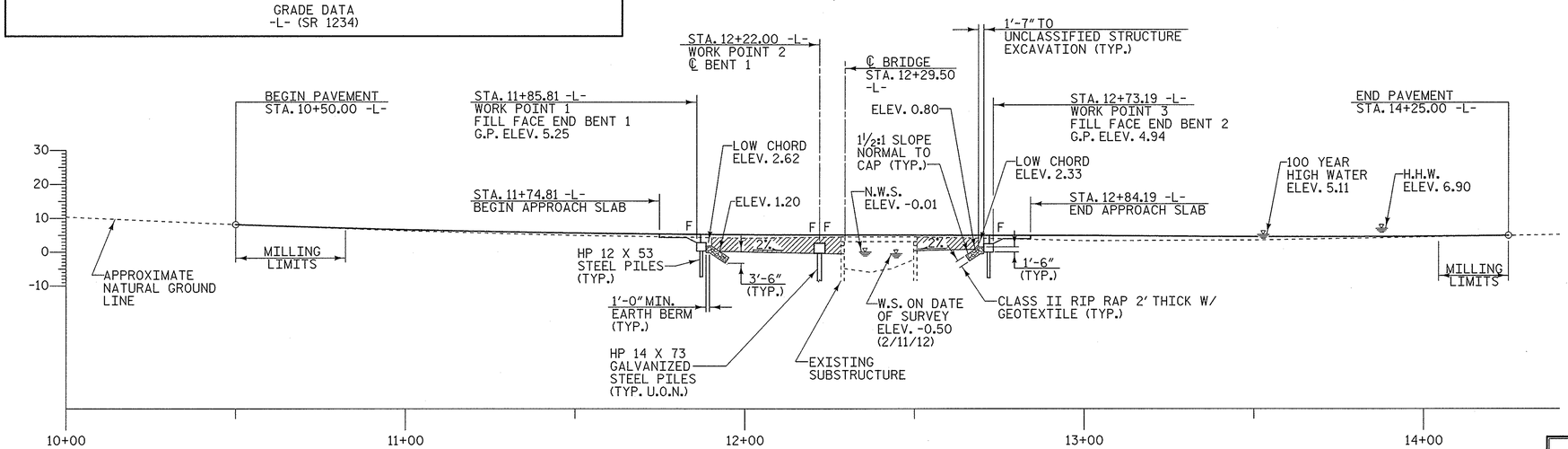

DENOTES UNCLASSIFIED STRUCTURE EXCAVATION

PROFILE ALONG ℄ SURVEY

SCALE: 1" = 20'
F = FIXED END

I HEREBY CERTIFY THESE PLANS ARE THE AS-BUILT PLANS

PROJECT NO. 17BP.1.R.36
CHOWAN COUNTY
STATION: 12+29.50 -L-

REPLACES BRIDGE NO. 34 SHEET 1 OF 2

STATE OF NORTH CAROLINA
DEPARTMENT OF TRANSPORTATION
RALEIGH

GENERAL DRAWING

BRIDGE ON SR 1234
OVER FILBERT'S CREEK
BETWEEN US 17 BYP. & NC 32

31'-0" CLEAR ROADWAY - 90° SKEW

NORTH CAROLINA PROFESSIONAL SEAL 19661 ENGINEER L. KEVIN AUSTIN 12/16/13

PLANS PREPARED BY:
MULKEY ENGINEERS & CONSULTANTS
PO Box 33127
RALEIGH, N.C. 27636
(919) 851-1912
(919) 851-1918 (FAX)
WWW.MULKEYINC.COM
NC LICENSE NO. C-1021

REVISIONS						SHEET NO.
NO.	BY:	DATE:	NO.	BY:	DATE:	1
1			3			TOTAL SHEETS
2			4			36

DRAWN BY : W. B. ALLEN DATE : 7/13
CHECKED BY : L. K. AUSTIN DATE : 7/13

12/13/2013 1:04:56 PM R:\Structures\Chowan 34_SD_GD_01.dgn

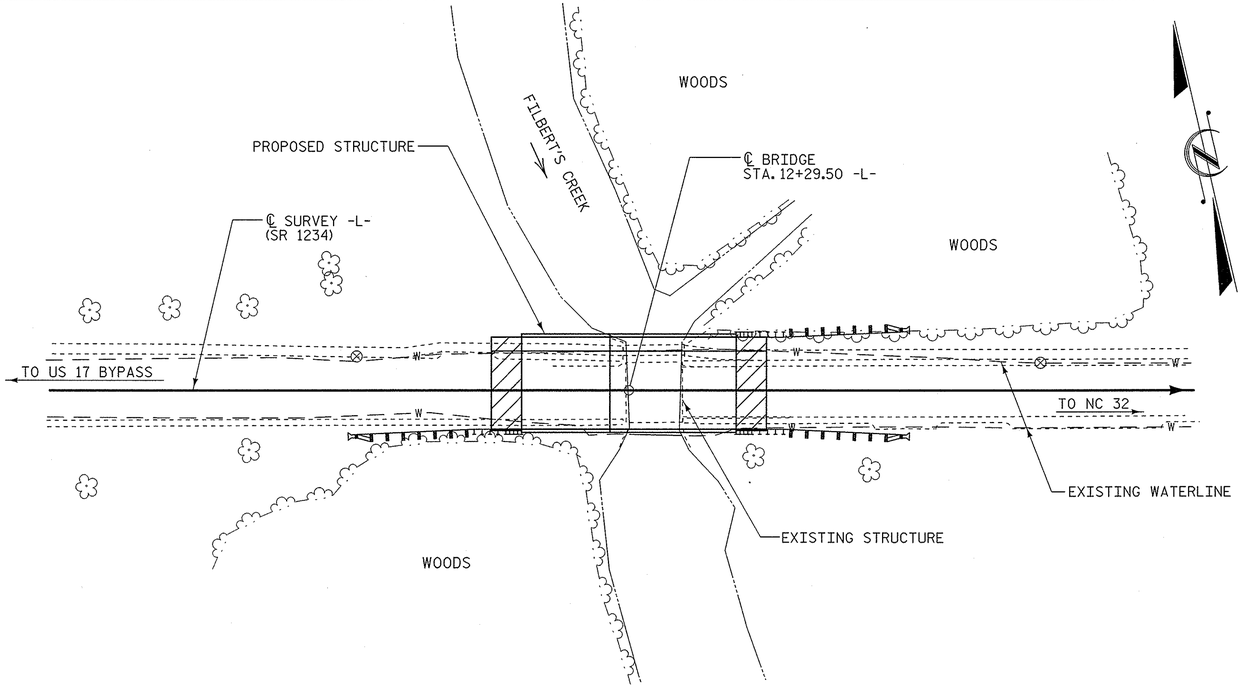

LOCATION SKETCH

TOTAL BILL OF MATERIAL

	REMOVAL OF EXISTING STRUCTURE	PDA TESTING	UNCLASSIFIED STRUCTURE EXCAVATION	BRIDGE APPROACH SLABS	HP 12 X 53 STEEL PILES		HP 14 X 73 GALVANIZED STEEL PILES		PILE REDRIVES	RIP RAP CLASS II (2'-0" THICK)	GEOTEXTILE FOR DRAINAGE	CONSTRUCTION OF SUBSTRUCTURE	CONSTRUCTION OF SUPERSTRUCTURE
	LUMP SUM	EACH	LUMP SUM	LUMP SUM	NO.	LIN. FT.	NO.	LIN. FT.	EACH	TONS	SQ. YARDS	LUMP SUM	LUMP SUM
SUPERSTRUCTURE	LUMP SUM			LUMP SUM								LUMP SUM	LUMP SUM
END BENT 1			LUMP SUM		7	490			3	110	120		
BENT 1							8	680	3				
END BENT 2			LUMP SUM		7	560			3	85	91		
TOTAL	LUMP SUM	2	LUMP SUM	LUMP SUM	14	1050	8	680	9	195	211	LUMP SUM	LUMP SUM

HYDROGRAPHIC DATA:

DESIGN DISCHARGE -	1300 CFS
FREQUENCY OF DESIGN FLOOD -	25 YEAR
DESIGN HIGH WATER ELEVATION -	4.0
DRAINAGE AREA -	1.0 SQ. MI.
BASE DISCHARGE (Q 100) -	1600 CFS
BASE HIGH WATER ELEVATION -	5.11

OVERTOPPING FLOOD DATA:

OVERTOPPING DISCHARGE -	1550 CFS
FREQUENCY OF OVERTOPPING FLOOD -	50 YEAR
OVERTOPPING FLOOD ELEVATION -	4.9

OVERTOPPING OCCURS AT ROADWAY STA. 13+66 -L- ± AT LEFT TOP OF BERM

NOTES

ASSUMED LIVE LOAD = HL-93 OR ALTERNATE LOADING.

THIS BRIDGE HAS BEEN DESIGNED IN ACCORDANCE WITH THE AASHTO LRFD BRIDGE DESIGN SPECIFICATIONS.

THIS BRIDGE IS LOCATED IN SESMIC ZONE 1.

FOR EROSION CONTROL MEASURES SEE EROSION CONTROL PLANS.

REMOVAL OF THE EXISTING BRIDGE SHALL BE PERFORMED SO AS NOT TO ALLOW DEBRIS TO FALL INTO THE WATER. THE CONTRACTOR SHALL REMOVE THE BRIDGE AND SUBMIT PLANS FOR THE DEMOLITION IN ACCORDANCE WITH ARTICLE 402-2 OF THE STANDARD SPECIFICATIONS.

THE MATERIAL SHOWN ON SHEET 1 IN THE CROSS-HATCHED AREA SHALL BE EXCAVATED FOR A DISTANCE OF 25 FT. EACH SIDE OF CENTERLINE ROADWAY AS DIRECTED BY THE ENGINEER. THIS WORK WILL BE PAID FOR AT THE CONTRACT LUMP SUM PRICE FOR UNCLASSIFIED STRUCTURE EXCAVATION.

THE SUBSTRUCTURE OF THE EXISTING BRIDGE INDICATED ON THE PLANS IS FROM THE BEST INFORMATION AVAILABLE. SINCE THIS INFORMATION IS SHOWN FOR THE CONVENIENCE OF THE CONTRACTOR, THE CONTRACTOR SHALL HAVE NO CLAIM WHATSOEVER AGAINST THE DEPARTMENT OF TRANSPORTATION FOR ANY DELAYS OR ADDITIONAL COST INCURRED BASED ON DIFFFERENCES BETWEEN THE EXISTING BRIDGE SUBSTRUCTURE SHOWN ON THE PLANS AND THE ACTUAL CONDITIONS AT THE PROJECT SITE.

INASMUCH AS THE PAINT SYSTEM ON THE EXISTING STRUCTURAL STEEL CONTAINS LEAD, THE CONTRACTOR'S ATTENTION IS DIRECTED TO ARTICLE 107-1 OF THE STANDARD SPECIFICATIONS. ANY COSTS RESULTING FROM COMPLIANCE WITH APPLICABLE STATE OR FEDERAL REGULATIONS PERTAINING TO HANDLING OF MATERIALS CONTAINING LEAD BASED PAINT SHALL BE INCLUDED IN THE BID PRICE FOR "REMOVAL OF EXISTING STRUCTURE."

THIS STRUCTURE HAS BEEN DESIGNED IN ACCORDANCE WITH "HEC 18 - EVALUATING SCOUR AT BRIDGES".

THIS STRUCTURE CONTAINS THE NECESSARY CORROSION PROTECTION FOR A CORROSIVE SITE.

CLASS AA CONCRETE SHALL BE USED IN ALL CAST-IN-PLACE END BENT AND INTERIOR BENT CAPS AND SHALL CONTAIN CALCIUM NITRITE CORROSION INHIBITOR.

ALL BAR SUPPORTS USED IN THE PARAPET, SIDEWALK, END BENT AND INTERIOR BENT CAPS AND ALL INCIDENTAL REINFORCING STEEL SHALL BE EPOXY COATED IN ACCORDANCE WITH THE STANDARD SPECIFICATIONS.

FOR PILES, SEE SECTION 450 OF THE STANDARD SPECIFICATIONS.

GALVANIZE THE TOP 25 FEET OF EACH INTERIOR BENT PILE IN ACCORDANCE WITH SECTION 1076 OF THE STANDARD SPECIFICATIONS.

PILES AT END BENT NO. 1 ARE DESIGNED FOR FACTORED RESISTANCE OF 60 TONS PER PILE.

DRIVE PILES AT END BENT NO. 1 TO A REQUIRED DRIVING RESISTANCE OF 100 TONS PER PILE.

PILES AT END BENT NO. 2 ARE DESIGNED FOR FACTORED RESISTANCE OF 75 TONS PER PILE.

DRIVE PILES AT END BENT NO. 2 TO A REQUIRED DRIVING RESISTANCE OF 125 TONS PER PILE.

PILES AT BENT NO. 1 ARE DESIGNED FOR FACTORED RESISTANCE OF 100 TONS PER PILE.

DRIVE PILES AT BENT NO. 1 TO A REQUIRED DRIVING RESISTANCE OF 170 TONS PER PILE.

INSTALL PILES AT BENT NO. 1 TO A TIP ELEVATION NO HIGHER THAN -33 FEET.

THE SCOUR CRITICAL ELEVATION FOR BENT NO. 1 IS ELEVATION -16 FT. SCOUR CRITICAL ELEVATIONS ARE USED TO MONITOR POSSIBLE SCOUR PROBLEMS DURING THE LIFE OF THE STRUCTURE.

TESTING PILES WITH THE PDA DURING DRIVING, RESTRIKING, OR REDRIVING MAY BE REQUIRED. THE ENGINEER WILL DETERMINE THE NEED FOR PDA TESTING. SEE SECTION 450 OF THE STANDARD SPECIFICATIONS, AND FOR PILE DRIVING CRITERIA, SEE PILE DRIVING CRITERIA SPECIAL PROVISIONS.

ADT = 1400 FOR YEAR 2009

ROADWAY APPROACH EMBANKMENT SHALL BE WIDENED AS NECESSARY FOR GUARDRAIL INSTALLATION.

FOR SUBMITTAL OF WORKING DRAWINGS, SEE SPECIAL PROVISIONS.

FOR FALSEWORK AND FORMWORK, SEE SPECIAL PROVISIONS.

FOR CRANE SAFETY, SEE SPECIAL PROVISIONS.

FOR GROUT FOR STRUCTURES, SEE SPECIAL PROVISIONS.

FOR OTHER DESIGN DATA AND GENERAL NOTES, SEE SHEET SN.

NO DECK DRAINS REQUIRED.

ASPHALT WEARING SURFACE IS INCLUDED IN ROADWAY QUANTITY ON ROADWAY PLANS.

PROJECT NO. 17BP.1.R.36

CHOWAN COUNTY

STATION: 12+29.50 -L-

REPLACES BRIDGE NO. 34 SHEET 2 OF 2

NORTH CAROLINA PROFESSIONAL SEAL ENGINEER 19661 L. KEVIN AUSTIN 12/16/13

PLANS PREPARED BY:

MULKEY ENGINEERS & CONSULTANTS
PO BOX 33127
RALEIGH, N.C. 27636
(919) 851-1912
(919) 851-1918 (FAX)
WWW.MULKEYINC.COM
NC LICENSE NO. C-1821

STATE OF NORTH CAROLINA
DEPARTMENT OF TRANSPORTATION
RALEIGH

GENERAL DRAWING
BRIDGE ON SR 1234
OVER FILBERT'S CREEK
BETWEEN US 17 BYP. & NC 32

31'-0" CLEAR ROADWAY - 90° SKEW

REVISIONS						SHEET NO.
NO.	BY:	DATE:	NO.	BY:	DATE:	2
1			3			TOTAL SHEETS
2			4			36

DRAWN BY : W. B. ALLEN DATE : 11/13
CHECKED BY : L. K. AUSTIN DATE : 11/13

12/13/2013 1:06:52 PM R:\Structures\Chowan 34_SD_GD_02.dgn

LOAD AND RESISTANCE FACTOR RATING (LRFD) SUMMARY FOR PRESTRESSED CONCRETE GIRDERS

LEVEL		VEHICLE	WEIGHT (W) (TONS)	CONTROLLING LOAD RATING (#)	MINIMUM RATING FACTORS (RF)	TONS = W X RF	STRENGTH I LIMIT STATE											SERVICE III LIMIT STATE						COMMENT NUMBER
								MOMENT					SHEAR						MOMENT					
							LIVELOAD FACTORS	DISTRIBUTION FACTORS (DF)	RATING FACTOR	SPAN	GIRDER LOCATION	DISTANCE FROM LEFT END OF SPAN (ft)	DISTRIBUTION FACTORS (DF)	RATING FACTOR	SPAN	GIRDER LOCATION	DISTANCE FROM LEFT END OF SPAN (ft)	LIVELOAD FACTORS	DISTRIBUTION FACTORS (DF)	RATING FACTOR	SPAN	GIRDER LOCATION	DISTANCE FROM LEFT END OF SPAN (ft)	
DESIGN LOAD RATING		HL-93(Inv)	N/A	1	1.14	--	1.75	0.282	1.5	A	EL	17.001	0.527	1.14	B	EL	2.45	0.80	0.282	1.25	A	EL	17.001	
		HL-93(Opr)	N/A	--	1.48	--	1.35	0.282	1.95	A	EL	17.001	0.527	1.48	B	EL	2.45	N/A	--	--	--	--	--	
		HS-20(Inv)	36.000	2	1.41	50.822	1.75	0.282	2.09	A	EL	13.601	0.527	1.41	B	EL	2.45	0.80	0.282	1.75	A	EL	20.402	
		HS-20(Opr)	36.000	--	1.83	65.881	1.35	0.282	2.71	A	EL	13.601	0.527	1.83	B	EL	2.45	N/A	--	--	--	--	--	
LEGAL LOAD RATING	SV	SNSH	13.500	--	3.03	40.956	1.40	0.282	4.54	A	EL	17.001	0.557	3.79	A	EL	3.40	0.80	0.282	3.03	A	EL	17.001	
		SNGARBS2	20.000	--	2.58	51.544	1.40	0.282	3.83	A	EL	13.601	0.557	2.89	A	EL	3.40	0.80	0.282	2.58	A	EL	20.402	
		SNAGRIS2	22.000	--	2.57	56.641	1.40	0.282	3.8	A	EL	13.601	0.527	2.72	B	EL	2.45	0.80	0.282	2.57	A	EL	20.402	
		SNCOTTS3	27.250	--	1.52	41.388	1.40	0.282	2.27	A	EL	17.001	0.557	1.91	A	EL	3.40	0.80	0.282	1.52	A	EL	17.001	
		SNAGGRS4	34.925	--	1.40	49.063	1.40	0.282	2.10	A	EL	17.001	0.527	1.70	B	EL	2.45	0.80	0.282	1.40	A	EL	17.001	
		SNS5A	35.550	--	1.36	48.478	1.40	0.282	2.04	A	EL	17.001	0.527	1.75	B	EL	2.45	0.80	0.282	1.36	A	EL	17.001	
		SNS6A	39.950	--	1.32	52.582	1.40	0.282	1.97	A	EL	17.001	0.527	1.62	B	EL	2.45	0.80	0.282	1.32	A	EL	17.001	
		SNS7B	42.000	3	1.26	52.750	1.40	0.282	1.88	A	EL	17.001	0.527	1.62	B	EL	2.45	0.80	0.282	1.26	A	EL	17.001	
	TTST	TNAGRIT3	33.000	--	1.63	53.641	1.40	0.282	2.43	A	EL	17.001	0.527	1.91	B	EL	2.45	0.80	0.282	1.63	A	EL	17.001	
		TNT4A	33.075	--	1.62	53.734	1.40	0.282	2.43	A	EL	17.001	0.527	1.84	B	EL	2.45	0.80	0.282	1.62	A	EL	17.001	
		TNT6A	41.600	--	1.42	59.203	1.40	0.282	2.13	A	EL	17.001	0.527	1.77	B	EL	2.45	0.80	0.282	1.42	A	EL	17.001	
		TNT7A	42.000	--	1.46	61.422	1.40	0.282	2.20	A	EL	17.001	0.527	1.65	B	EL	2.45	0.80	0.282	1.46	A	EL	17.001	
		TNT7B	42.000	--	1.45	60.748	1.40	0.282	2.16	A	EL	17.001	0.527	1.56	B	EL	2.45	0.80	0.282	1.45	A	EL	17.001	
		TNAGRIT4	43.000	--	1.46	62.854	1.40	0.282	2.16	A	EL	13.601	0.527	1.50	B	EL	2.45	0.80	0.282	1.46	A	EL	17.001	
		TNAGT5A	45.000	--	1.35	60.759	1.40	0.282	2.02	A	EL	17.001	0.527	1.52	B	EL	2.45	0.80	0.282	1.35	A	EL	17.001	
		TNAGT5B	45.000	--	1.30	58.516	1.40	0.282	1.95	A	EL	17.001	0.527	1.42	B	EL	2.45	0.80	0.282	1.30	A	EL	17.001	

LOAD FACTORS:

DESIGN LOAD RATING FACTORS	LIMIT STATE	γ_{DC}	γ_{DW}
	STRENGTH I	1.25	1.50
	SERVICE III	1.00	1.00

NOTES:

MINIMUM RATING FACTORS ARE BASED ON THE STRENGTH I AND SERVICE III LIMIT STATES.

ALLOWABLE STRESSES FOR SERVICE III LIMIT STATE ARE AS REQUIRED FOR DESIGN.

COMMENTS:

1.
2.
3.
4.

(#) CONTROLLING LOAD RATING

(1) DESIGN LOAD RATING (HL-93)

(2) DESIGN LOAD RATING (HS-20)

(3) LEGAL LOAD RATING **

** SEE CHART FOR VEHICLE TYPE

GIRDER LOCATION

I - INTERIOR GIRDER
EL - EXTERIOR LEFT GIRDER
ER - EXTERIOR RIGHT GIRDER

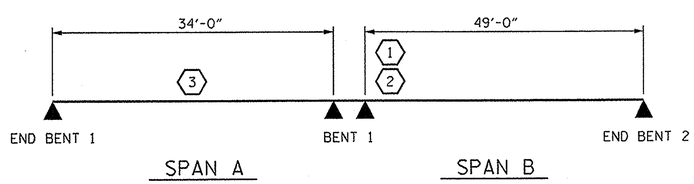

LRFR SUMMARY

PROJECT NO. 17BP.1.R.36
CHOWAN COUNTY
STATION: 12+29.50 -L-

STATE OF NORTH CAROLINA
DEPARTMENT OF TRANSPORTATION
RALEIGH

STANDARD
LRFR SUMMARY FOR PRESTRESSED CONCRETE GIRDERS
(NON-INTERSTATE TRAFFIC)

NORTH CAROLINA PROFESSIONAL SEAL 14045 ENGINEER TIMOTHY L. COGGINS
11/22/13

REVISIONS						SHEET NO.
NO.	BY:	DATE:	NO.	BY:	DATE:	3
1			3			TOTAL SHEETS
2			4			36

ASSEMBLED BY : N. Ruffin DATE : 8/15/13
CHECKED BY : T.L. COGGINS DATE : 11/20/13
DRAWN BY : MAA 1/08
CHECKED BY : GM/DI 2/08
REV. 11/12/08RR MAA/GM
REV. 10/1/11 MAA/GM

22-NOV-2013 15:49
S:\DPG1\Tim\Division 1 LIBR\17BP.1.R.36\nruffin\17BP1R36_sm_Design2_01.dgn
nruffin

STD. NO. LRFR1

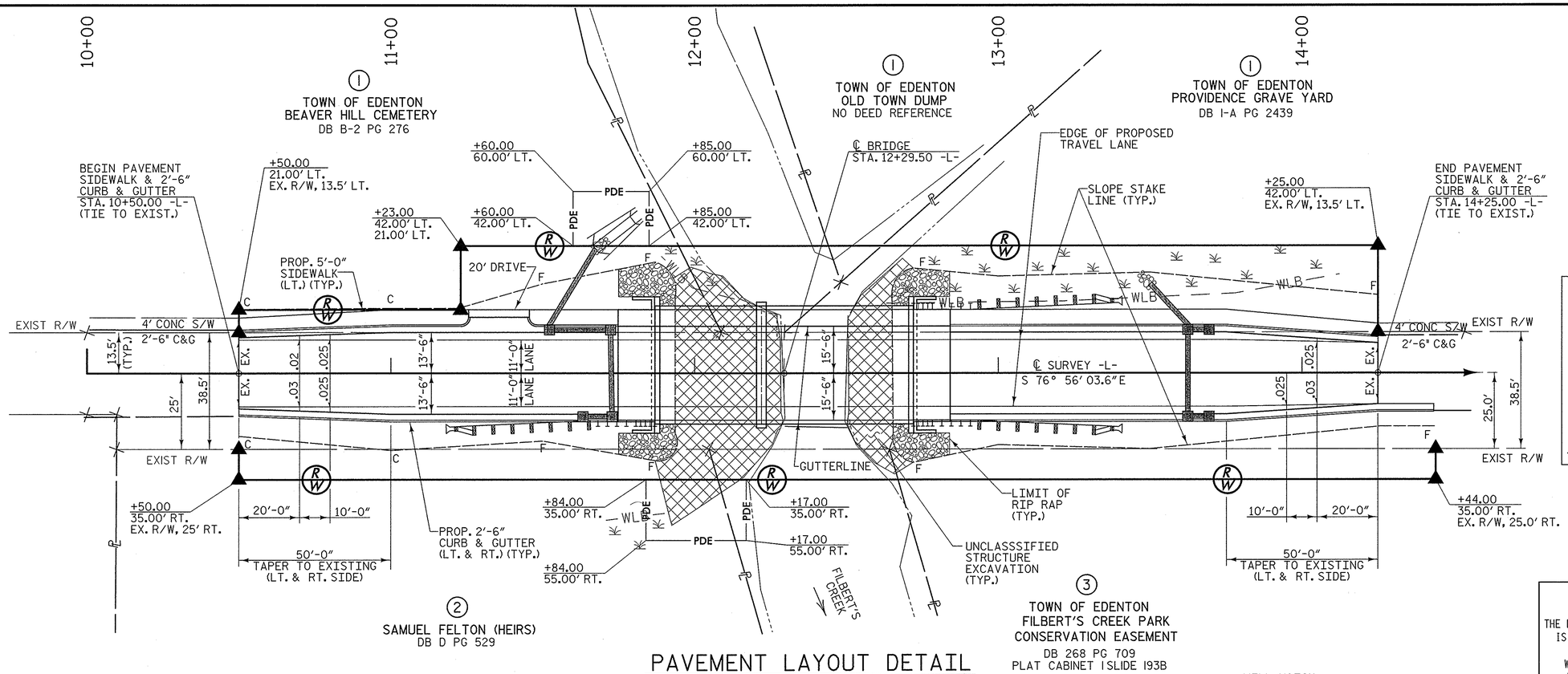

PAVEMENT LAYOUT DETAIL

SCALE: 1" = 20'

DETAIL A

SPECIAL CUT GRASSED SWALE

(Not to Scale)

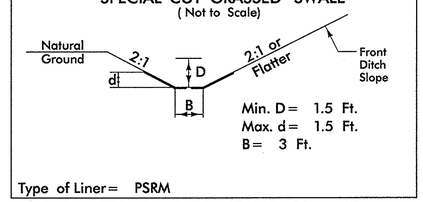

FROM STA. 11+65 TO STA. 11+82 +/- LT

DATUM DESCRIPTION

THE LOCALIZED COORDINATE SYSTEM DEVELOPED FOR THIS PROJECT IS BASED ON THE STATE PLANE COORDINATES ESTABLISHED BY OTHERS FOR MONUMENT "BL-2"
WITH NAD 83/CORS 96 STATE PLANE GRID COORDINATES OF
NORTHING: 850746.53(ft) EASTING: 2705123.08(ft)
ELEVATION: 3.18(ft)
THE AVERAGE COMBINED GRID FACTOR USED ON THIS PROJECT (GROUND TO GRID) IS: 0.999978616

LOCALIZED HORIZONTAL GROUND DISTANCE FROM "BL-2" TO -L- STATION 10+50.00 IS N 71° 08' 35.0" W 168.59'

ALL LINEAR DIMENSIONS ARE LOCALIZED HORIZONTAL DISTANCES
VERTICAL DATUM USED IS NAVD 88

RIGHT OF WAY AREA DATA

PARCEL NO.	PROPERTY OWNERS NAMES	TOTAL AREA	AREA TAKEN	AREA REMAINING RT.	AREA REMAINING LT.	CONST. EASE.	PERM. DRAIN. EASE.	TEMP. DRAIN. EASE.
1	TOWN OF EDENTON	29.77 AC	0.18 AC		29.59 AC		450 SF	
2	SAMUEL FELTON (HEIRS)	1.84 AC	1562 SF	1.80 AC			394 SF	
3	TOWN OF EDENTON	2.43 AC	1784 SF	2.39 AC				

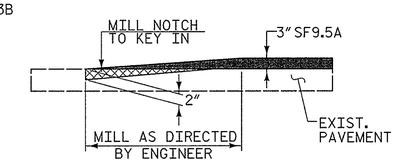

MILLING DETAIL

MILL EXISTING PAVEMENT AT THE FOLLOWING LOCATIONS
-L- STA. 10+50.00 TO STA. 10+82+/-
-L- STA. 14+04+/- TO STA. 14+25.00

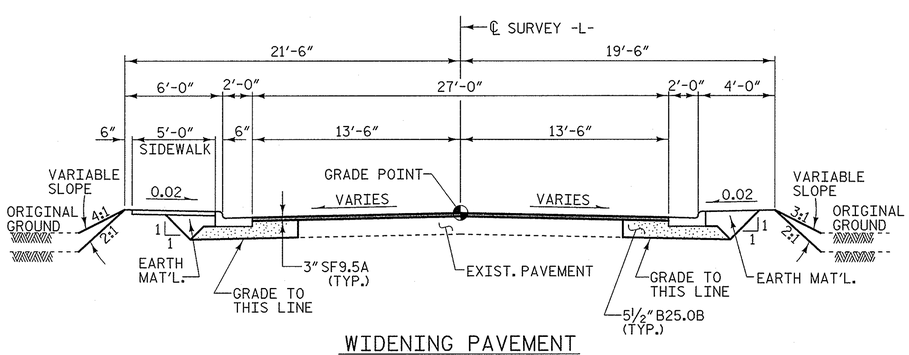

WIDENING PAVEMENT

FROM -L- STA. 10+50.00 TO -L- STA. 11+60
FROM -L- STA. 13+75 TO -L- STA. 14+25.00

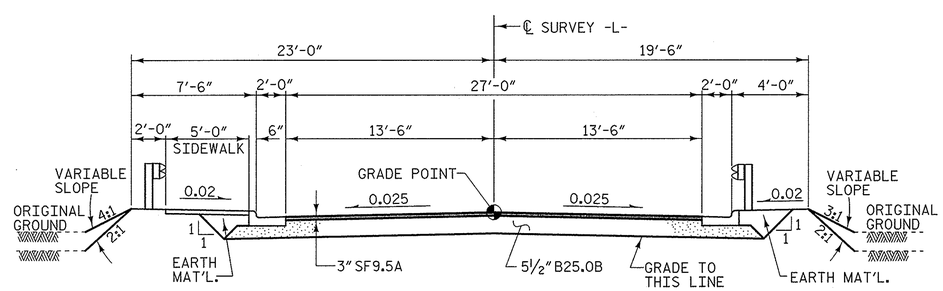

FULL DEPTH PAVEMENT

FROM -L- STA. 11+60 TO BEGIN BRIDGE
FROM END BRIDGE TO -L- STA. 13+75

TYPICAL ROADWAY SECTION

WITHIN CONSTRUCTION LIMITS

PROJECT NO. 17BP.1.R.36
CHOWAN COUNTY
STATION: 12+29.50 -L-

REPLACES BRIDGE NO. 34

STATE OF NORTH CAROLINA
DEPARTMENT OF TRANSPORTATION
RALEIGH

ROADWAY DETAILS

31'-0" CLEAR ROADWAY - 90° SKEW

NORTH CAROLINA PROFESSIONAL SEAL 19661 ENGINEER L. KEVIN AUSTIN 12/16/13

PLANS PREPARED BY:
MULKEY ENGINEERS & CONSULTANTS
PO Box 33127
Raleigh, N.C. 27636
(919) 851-1912
(919) 851-1918 (FAX)
WWW.MULKEYINC.COM
NC LICENSE NO. C-1021

REVISIONS						SHEET NO.
NO.	BY:	DATE:	NO.	BY:	DATE:	4
1			3			TOTAL SHEETS
2			4			36

DRAWN BY : W. B. ALLEN DATE : 7/13
CHECKED BY : L. K. AUSTIN DATE : 7/13

12/13/2013 1:08:06 PM R:\Structures\Chowan 34_50_00_03.dgn

TRAFFIC CONTROL FOR TEMPORARY ROAD CLOSURE

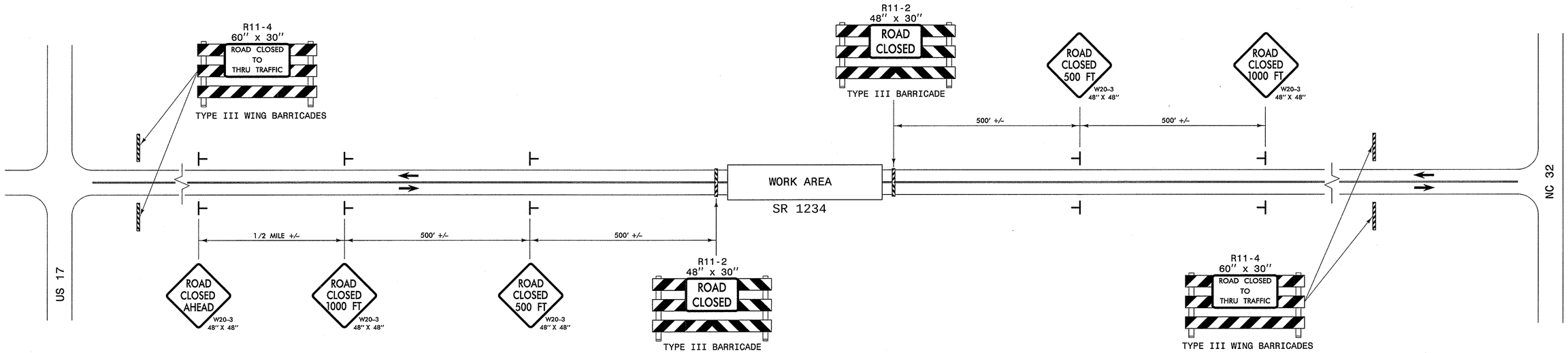

LEGEND

⊢ STATIONARY SIGN

← DIRECTION OF TRAFFIC FLOW

GENERAL NOTES

1- INSTALLATION OF TEMPORARY ROUTE MARKERS, DESTINATION SIGNS AND ANY NECESSARY MODIFICATIONS TO EXISTING OR PROPOSED REGULATORY OR WARNING SIGNS WILL BE MADE BY OTHERS (STATE OR CITY FORCES) UNLESS OTHERWISE DESIGNATED IN PLANS. PROVIDE A MINIMUM 21 CALENDAR DAY NOTICE TO STATE FORCES BEFORE A ROADWAY IS CLOSED TO TRAFFIC SUCH THAT NECESSARY PROVISIONS CA BE MADE TO INFORM LOCAL EMERGENCY AND LAW ENFORCEMENT PERSONNEL, SCHOOLS OR OTHER PARTIES AFFECTED BY THE ROAD CLOSURE.

2- DO NOT INSTALL ADVANCE WARING SIGNS MORE THAN 3 DAYS PRIOR TO BEGINING OF WORK.

3- INSTALL SIGNS BEFORE THE BARRICADES WHEN CLOSING THE ROADWAY TO TRAFFIC. REMOVE BARRICADES BEFORE SIGNS WHEN OPENING THE ROADWAY TO TRAFFIC. INSTALL/REMOVE SIGNS AND BARRICADES WITHIN THE SAME CALENDAR DAY.

4- POSITION WING BARRICADES ON THE SHOULDERS AND SLOPE THE STRIPES DOWNWARDIN THE DIRECTION TOWARD WHICH TRAFFIC MUST TURN IN DETOURING.

5- USE PORTABLE SIGNS IF ROAD CLOSURE IS TO BE IMPLEMENTED FOR LESS THAN ONE DAY OR FOR EMERGENCIES.

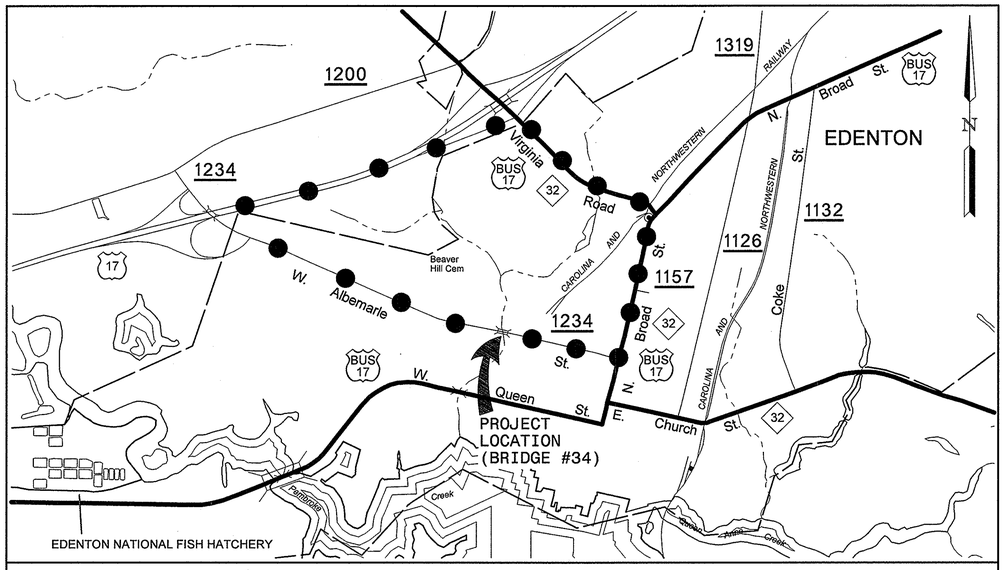

VICINITY MAP
(NOT TO SCALE)

●—●—●—● DETOUR ROUTE

PROJECT NO. 17BP.1.R.36

CHOWAN COUNTY

STATION: 12+29.50 -L-

REPLACES BRIDGE NO. 34

STATE OF NORTH CAROLINA
DEPARTMENT OF TRANSPORTATION
RALEIGH

TRAFFIC CONTROL

31'-0" CLEAR ROADWAY - 90° SKEW

NORTH CAROLINA PROFESSIONAL SEAL 19661 ENGINEER KEVIN AUSTIN 12/16/13

PLANS PREPARED BY:

MULKEY ENGINEERS & CONSULTANTS
PO BOX 33127
RALEIGH, N.C. 27636
(919) 851-1912
(919) 851-1918 (FAX)
WWW.MULKEYINC.COM
NC LICENSE NO. C-1021

REVISIONS						SHEET NO.
NO.	BY:	DATE:	NO.	BY:	DATE:	5
1			3			TOTAL SHEETS
2			4			36

DRAWN BY : W. B. ALLEN DATE : 11/13
CHECKED BY : L. K. AUSTIN DATE : 11/13

12/13/2013 11:09:17 PM R:\Structures\Chowan 34_50_TCP_01.dgn

0 2.5 5	PROJ. REFERENCE NO.	SHEET NO.
	17BP.1.R.36	6

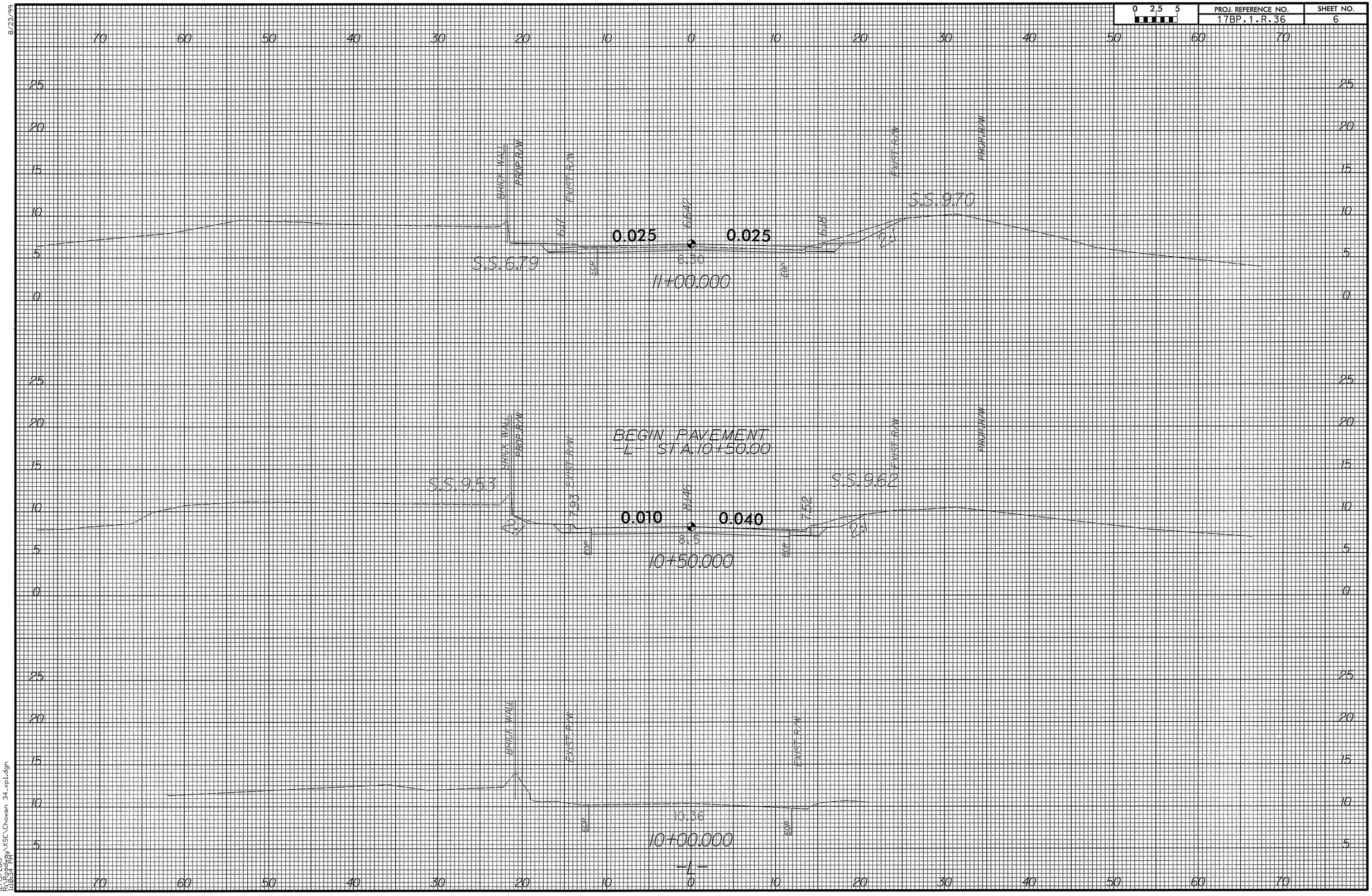

8/23/99

12/13/2013
R:\Roadway\XSC\Chowan 34_xpl.dgn
11:03:37 PM

8/23/99

0 2.5 5	PROJ. REFERENCE NO.	SHEET NO.
	17BP.1.R.36	7

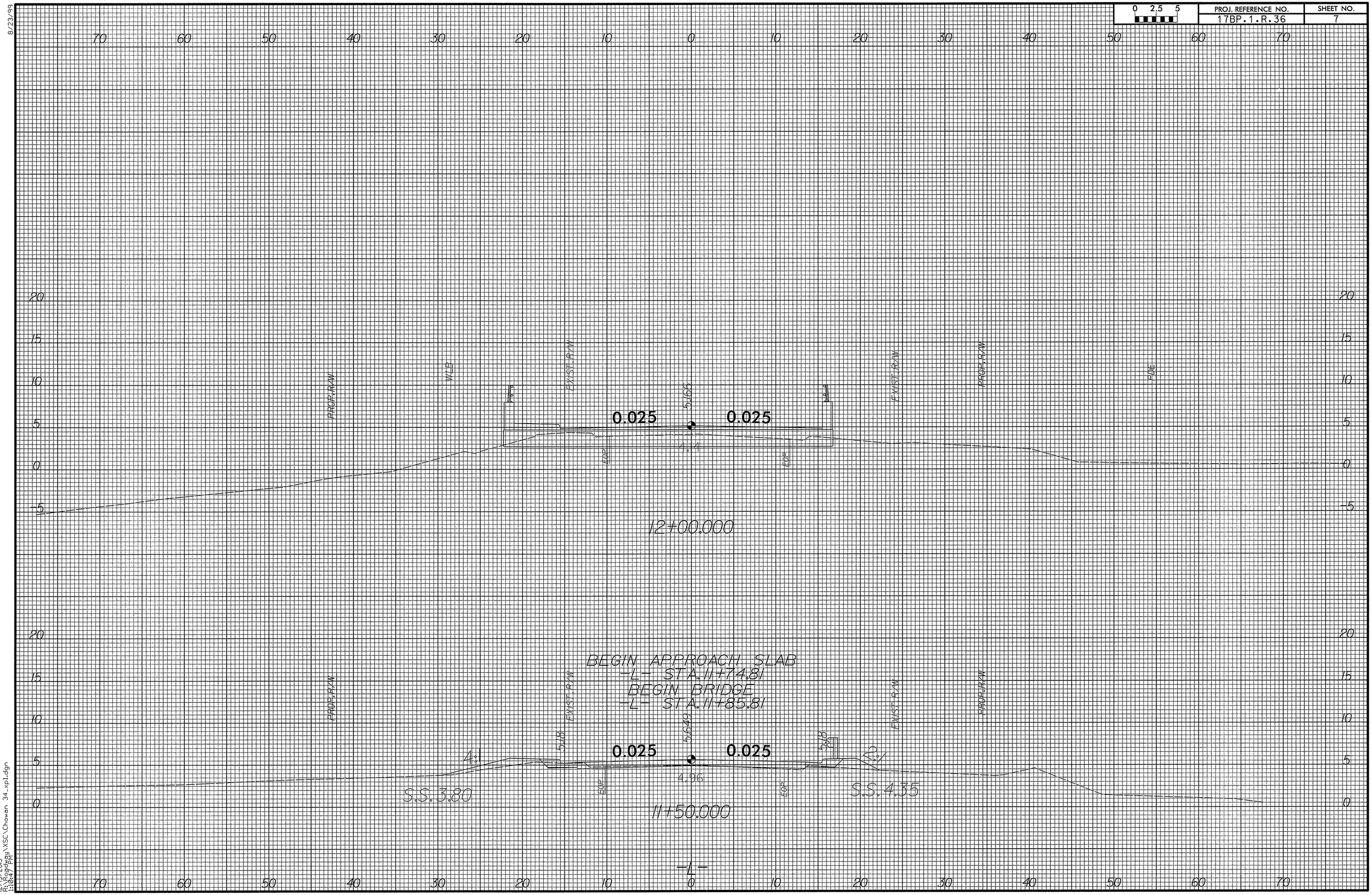

12/13/2013
R:\Roadway\XSC\Chowan 34_xpl.dgn
11:04:17 AM

0 2.5 5	PROJ. REFERENCE NO.	SHEET NO.
	17BP.1.R.36	8

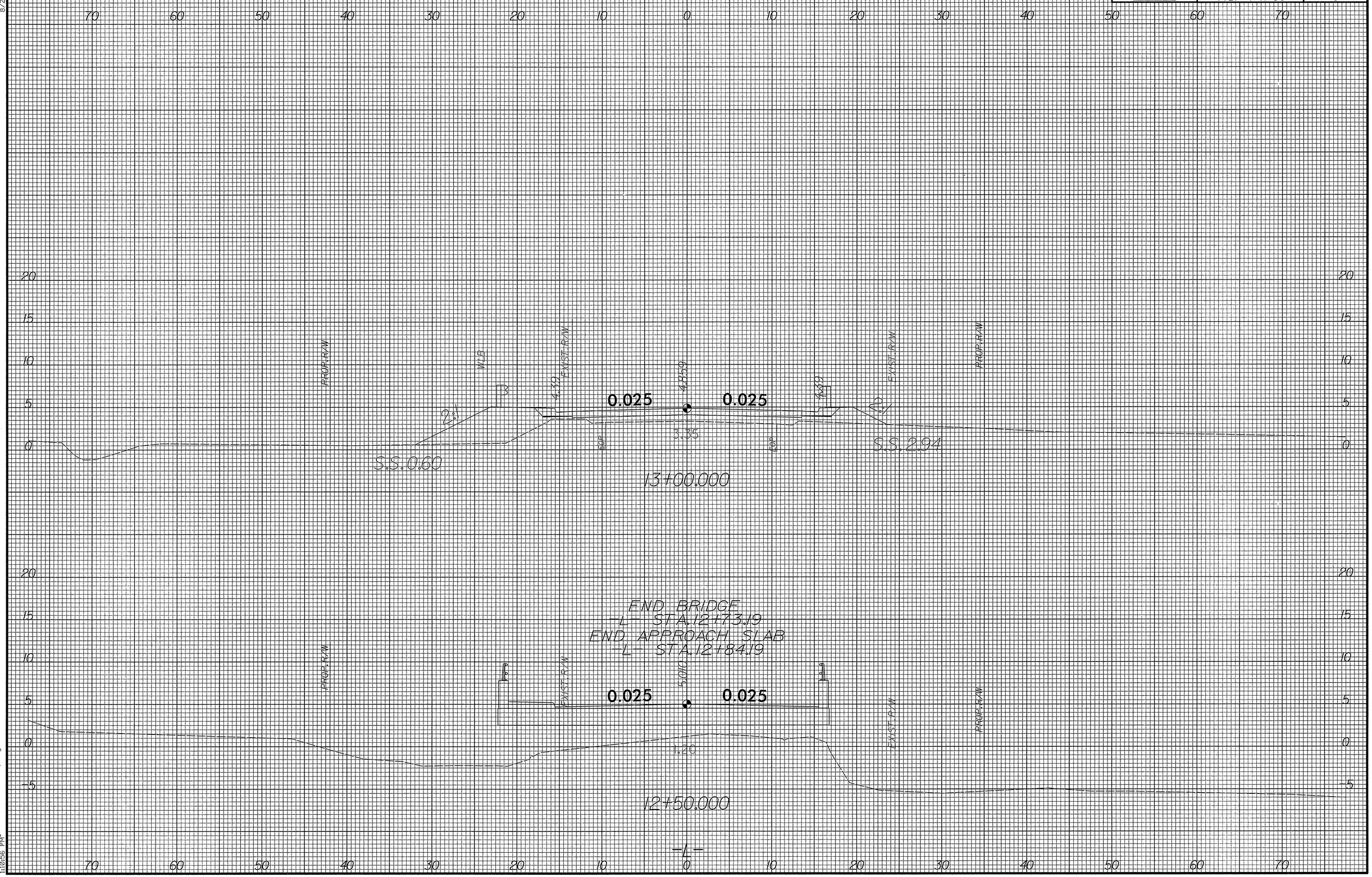

8/23/99

12/13/2013
R:\Roadway\XSC\Chowan 34_xpl.dgn
11:09:59 AM

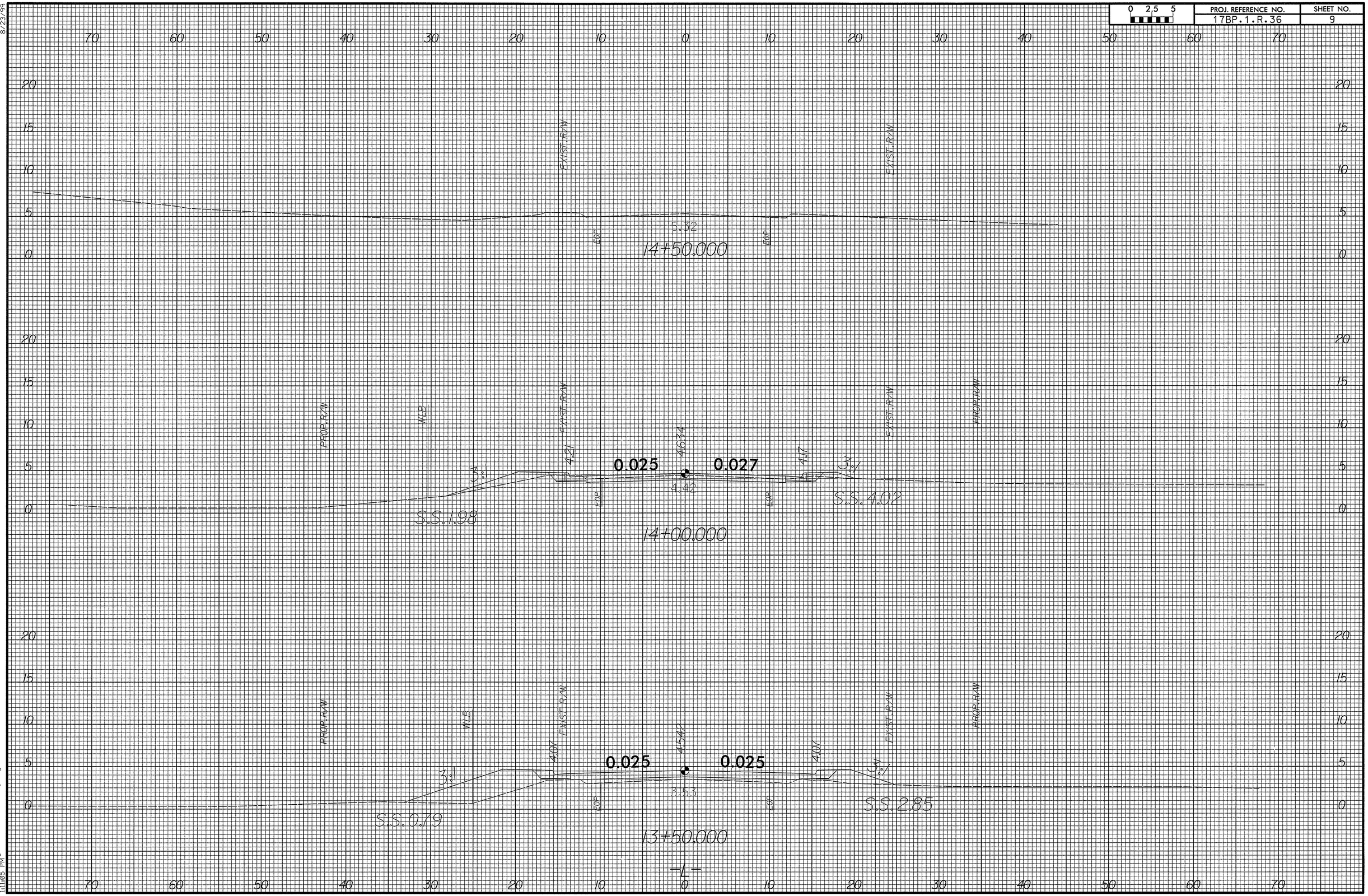

8/23/99

12/13/2013
R:\Roadway\XSC\Chowan 34_xpl.dgn
11:19:39 AM

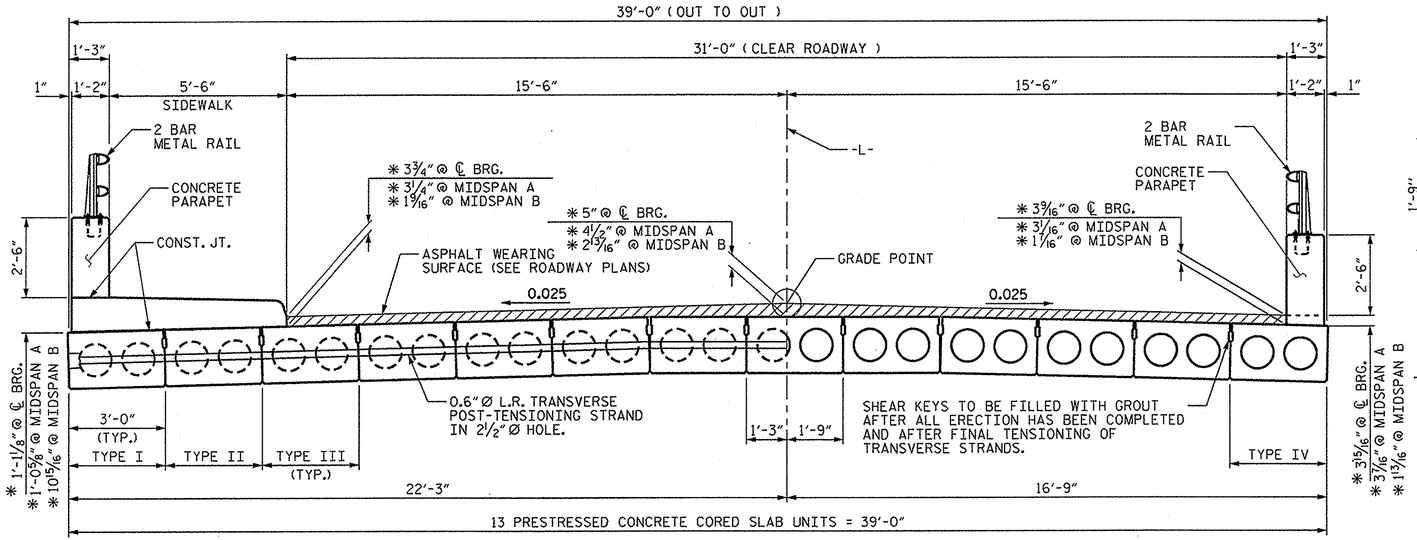

HALF SECTION
AT INTERMEDIATE DIAPHRAGMS

HALF SECTION
THROUGH VOIDS

TYPICAL SECTION

* - THE MINIMUM AND MAXIMUM CONCRETE PARAPET HEIGHTS, SIDEWALK HEIGHT AND ASPHALT WEARING SURFACE THICKNESS ARE SHOWN. THE HEIGHT OF THE SIDEWALK, CONCRETE PARAPET AND ASPHALT WEARING SURFACE THICKNESS VARIES WHILE THE TOP OF THE CONCRETE PARAPETS FOLLOWS THE PROFILE OF THE GUTTERLINE.

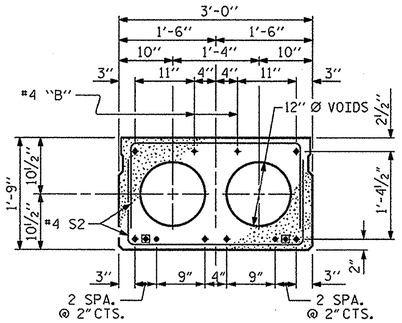

TYPE III - INTERIOR SLAB SECTION
SPAN A (35' UNIT)
(10 STRANDS REQUIRED)

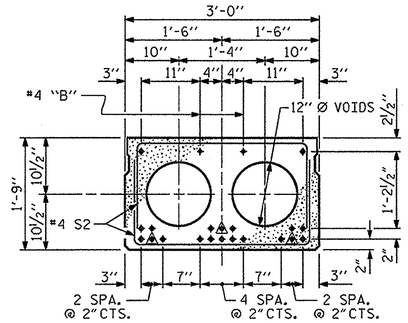

TYPE III - INTERIOR SLAB SECTION
SPAN B (50' UNIT)
(20 STRANDS REQUIRED)

0.6" Ø LOW RELAXATION STRAND LAYOUT

● BOND SHALL BE BROKEN ON THESE STRANDS FOR A DISTANCE OF 2'-0" FROM END OF CORED SLAB UNIT. SEE STANDARD SPECIFICATIONS, ARTICLE 1078-7.

▲ BOND SHALL BE BROKEN ON THESE STRANDS FOR A DISTANCE OF 6'-0" FROM END OF CORED SLAB UNIT. SEE STANDARD SPECIFICATIONS, ARTICLE 1078-7.

DEBONDING LEGEND

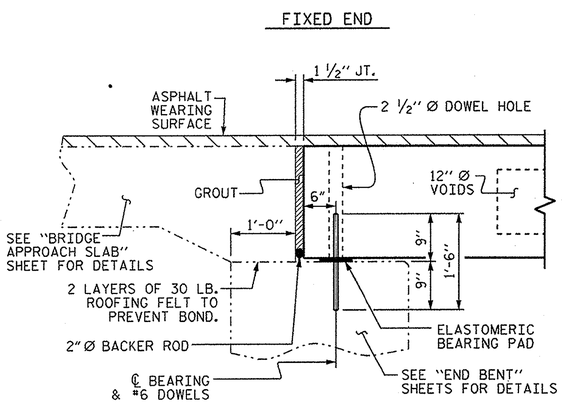

SECTION AT END BENT

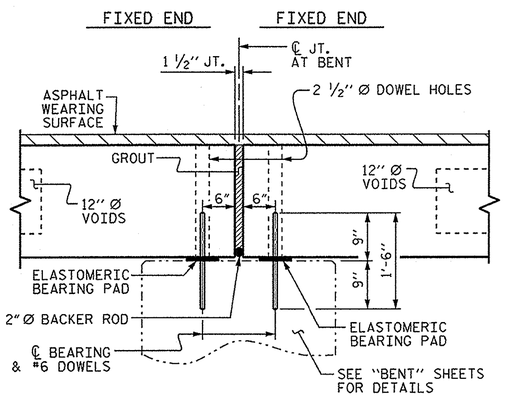

SECTION AT BENT

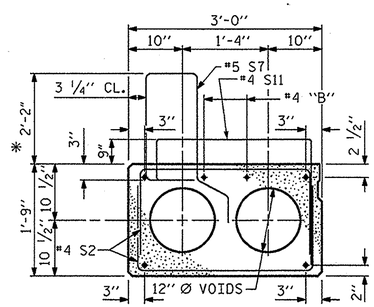

TYPE I - EXTERIOR SLAB
SIDEWALK SECTION
(FOR PRESTRESSED STRAND LAYOUT, SEE TYPE III - INTERIOR SLAB SECTION)

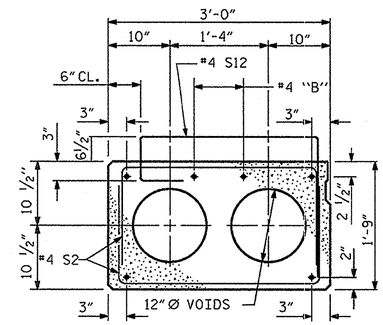

TYPE II - INTERIOR SLAB
SIDEWALK SECTION
(FOR PRESTRESSED STRAND LAYOUT, SEE TYPE III - INTERIOR SLAB SECTION)

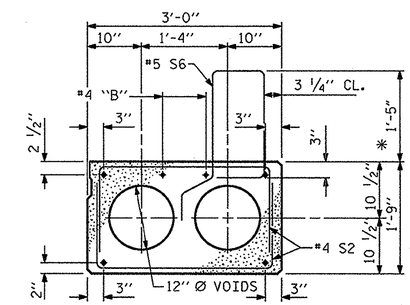

TYPE IV - EXTERIOR SLAB
SIDEWALK SECTION
(FOR PRESTRESSED STRAND LAYOUT, SEE TYPE III - INTERIOR SLAB SECTION)

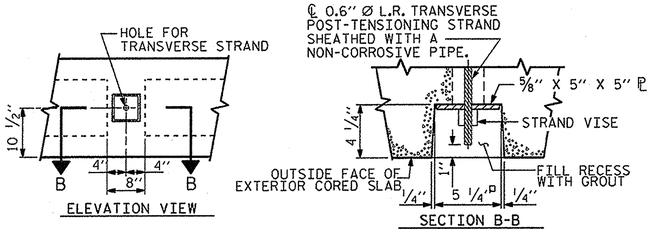

GROUTED RECESS AT END OF POST-TENSIONED STRAND·CORED SLABS

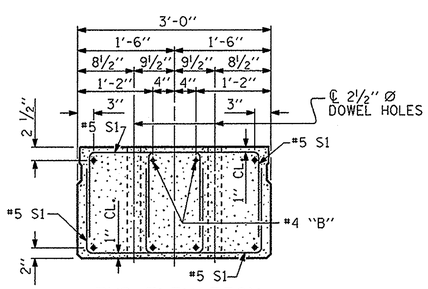

END ELEVATION

SHOWING PLACEMENT OF DOUBLE STIRRUPS AND LOCATION OF DOWEL HOLES. (STRAND LAYOUT NOT SHOWN.)
INTERIOR SLAB SECTION SHOWN-EXTERIOR SLAB SECTION SIMILAR EXCEPT SHEAR KEY LOCATION.

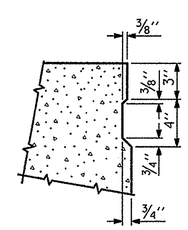

SHEAR KEY DETAIL

NOTE: OMIT SHEAR KEY ON OUTSIDE FACE OF EXTERIOR CORED SLABS.

PROJECT NO. 17BP.1.R.36
CHOWAN COUNTY
STATION: 12+29.50 -L-

STATE OF NORTH CAROLINA
DEPARTMENT OF TRANSPORTATION
RALEIGH

SUPERSTRUCTURE
3'-0" × 1'-9"
PRESTRESSED CONCRETE CORED SLAB UNIT

NORTH CAROLINA PROFESSIONAL SEAL 14045 ENGINEER TIMOTHY L. COGGINS
11/26/13

REVISIONS						SHEET NO.
NO.	BY:	DATE:	NO.	BY:	DATE:	10
1			3			TOTAL SHEETS
2			4			36

DRAWN BY : N. Ruffin DATE : 8/13/13
CHECKED BY : T.L. COGGINS DATE : 11/15/13
DESIGN ENGINEER OF RECORD: N.M. RUFFIN DATE : 11/21/13

22-NOV-2013 15:49
S:\DPGI\Tim\Division 1 LIBR\17BP.1.R.36\nruffin\17BP1R36_sm_Design2_01.dgn
nruffin

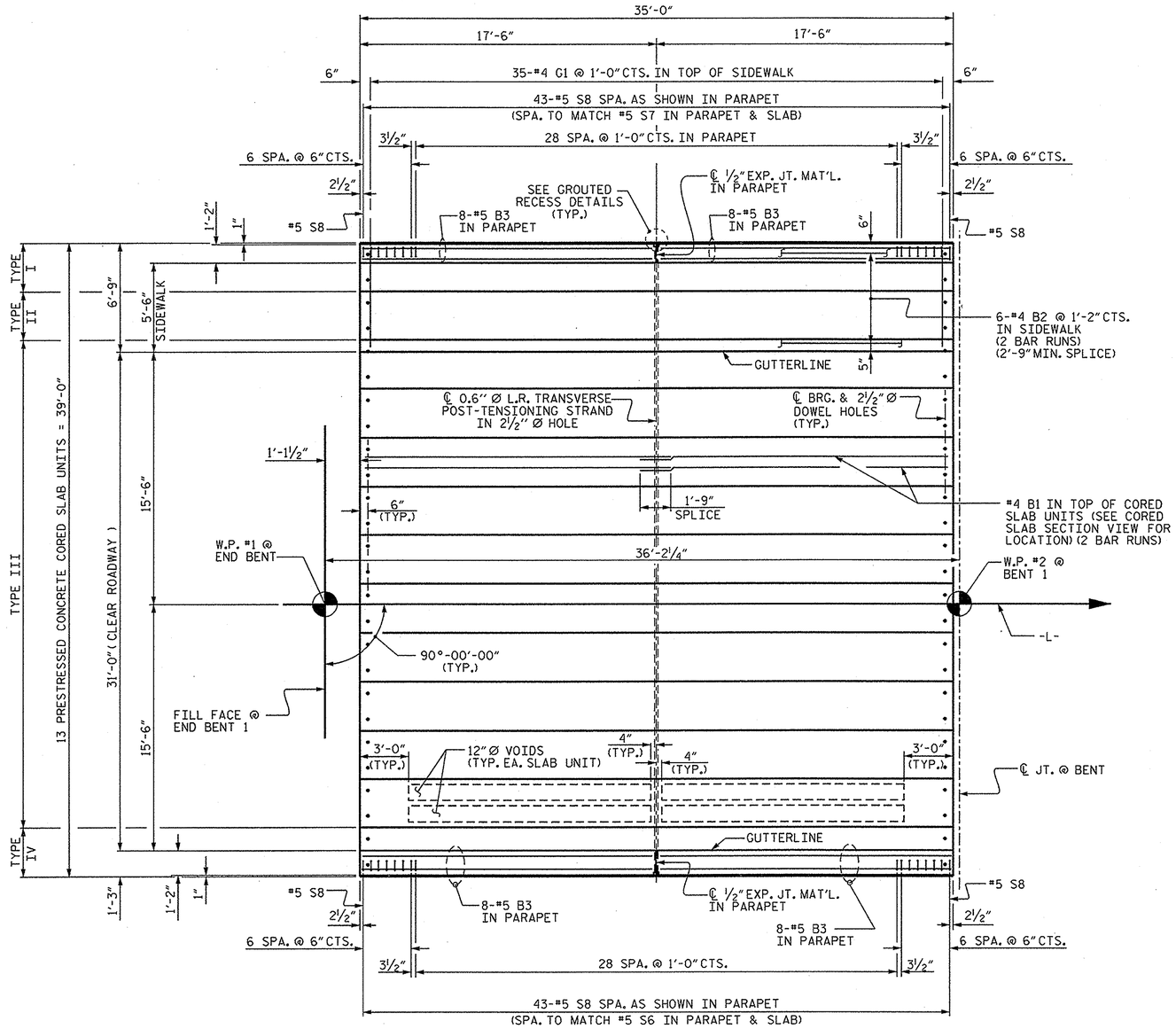

SPAN "A"

(SPAN A)
SHOWING REINFORCING STEEL IN PARAPET AND SIDEWALK.
SEE SHEET 2 OF 4 FOR REINFORCING STEEL DETAILS IN CORED SLAB UNITS.

PROJECT NO. 17BP.1.R.36
CHOWAN COUNTY
STATION: 12+29.50 -L-

SHEET 1 OF 4

STATE OF NORTH CAROLINA
DEPARTMENT OF TRANSPORTATION
RALEIGH

SUPERSTRUCTURE

PLAN OF SPAN
SPAN A

NORTH CAROLINA PROFESSIONAL SEAL 14045 ENGINEER TIMOTHY L. COGGINS
11/22/13

REVISIONS						SHEET NO.
NO.	BY:	DATE:	NO.	BY:	DATE:	11
1			3			TOTAL SHEETS
2			4			36

DRAWN BY : N. Ruffin DATE : 8/15/13
CHECKED BY : T.L. COGGINS DATE : 11/15/13
DESIGN ENGINEER OF RECORD: N.M. RUFFIN DATE : 11/21/13

22-NOV-2013 15:49
S:\DPG\Tim\Division 1 LIBR\17BP.1.R.36\nruffin\17BP1R36_sm_Design2_01.dgn
nruffin

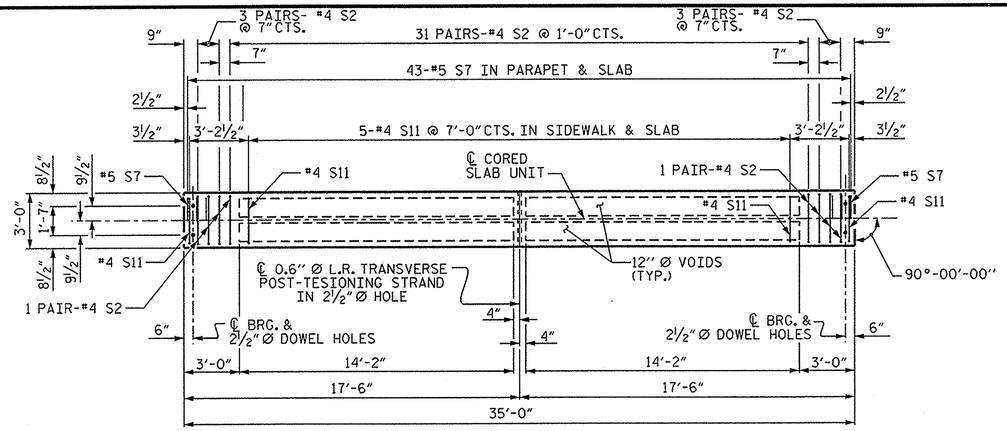

PLAN OF TYPE I CORED SLAB UNIT

FOR LOCATION OF S1 BARS AND S7 BARS AT ENDS OF SLAB, SEE "PART PLAN - EXTERIOR SECTIONS"

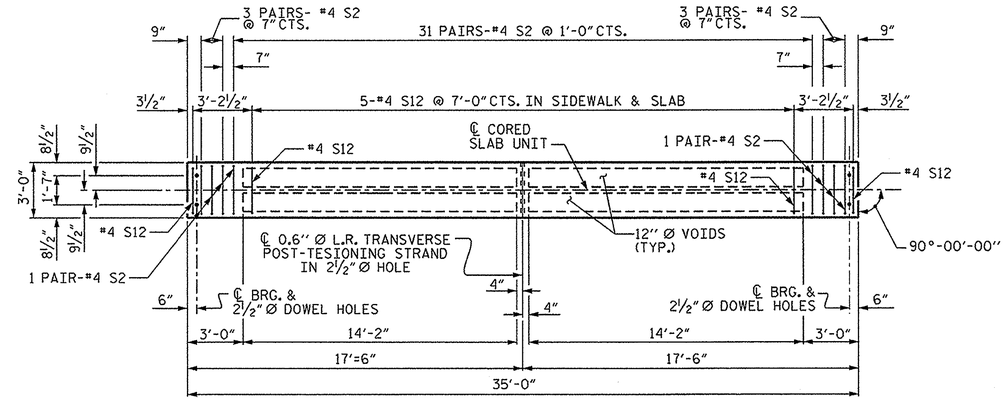

PLAN OF TYPE II CORED SLAB UNIT

FOR LOCATION OF S1 BARS AT ENDS OF SLAB, SEE "PART PLAN - EXTERIOR SECTIONS"

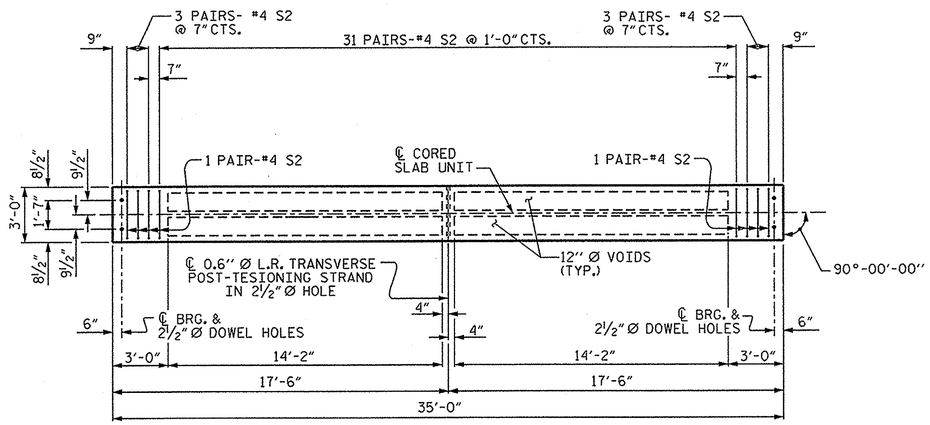

PLAN OF TYPE III CORED SLAB UNIT

FOR LOCATION OF S1 BARS AT ENDS OF SLAB, SEE "PART PLAN - EXTERIOR SECTIONS"

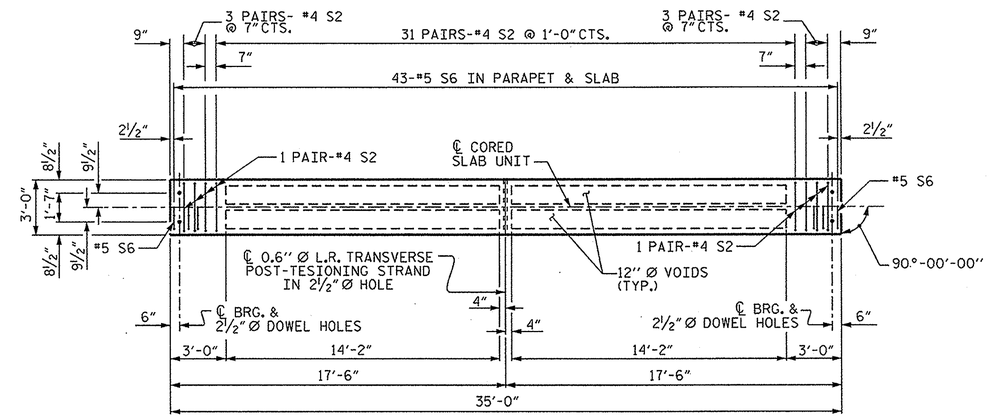

PLAN OF TYPE IV CORED SLAB UNIT

FOR LOCATION OF S1 BARS AND S6 BARS AT ENDS OF SLAB, SEE "PART PLAN - EXTERIOR SECTIONS"

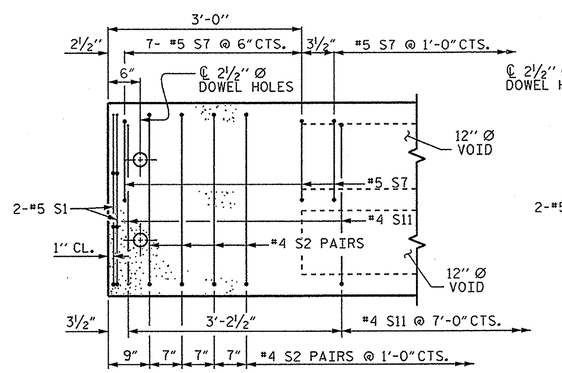

TYPE I EXTERIOR SECTION

TYPE II SIMILAR EXCEPT OMIT S7 BARS AND SUBSTITUTE #4 S12 BARS FOR #4 S11 BARS

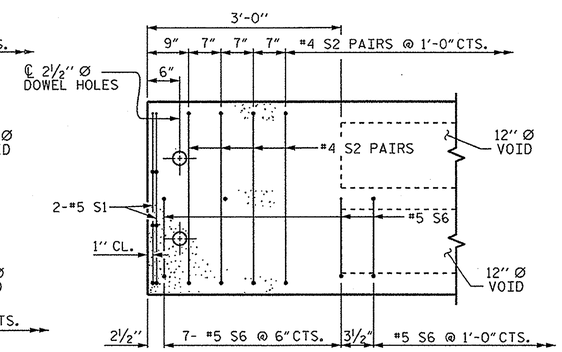

TYPE IV EXTERIOR SECTION

TYPE III SIMILAR EXCEPT OMIT S6 BARS

PART PLAN - EXTERIOR SECTIONS

PROJECT NO. 17BP.1.R.36
CHOWAN COUNTY
STATION: 12+29.50 -L-

SHEET 2 OF 4

STATE OF NORTH CAROLINA
DEPARTMENT OF TRANSPORTATION
RALEIGH

SUPERSTRUCTURE
PLAN OF SPAN
SPAN A
DETAILS

NORTH CAROLINA PROFESSIONAL SEAL 14045 ENGINEER TIMOTHY L. COGGINS
11/22/13

DRAWN BY : N. Ruffin	DATE : 8/15/13		
CHECKED BY : T.L. COGGINS	DATE : 11/15/13		
DESIGN ENGINEER OF RECORD: N.M. RUFFIN	DATE : 11/22/13		

REVISIONS						SHEET NO.
NO.	BY:	DATE:	NO.	BY:	DATE:	12
1			3			TOTAL SHEETS
2			4			36

22-NOV-2013 15:49
S:\DPG1\Tim\Division 1 LIBR\17BP.1.R.36\nruffin\17BP1R36_sm_Design2_01.dgn
nruffin

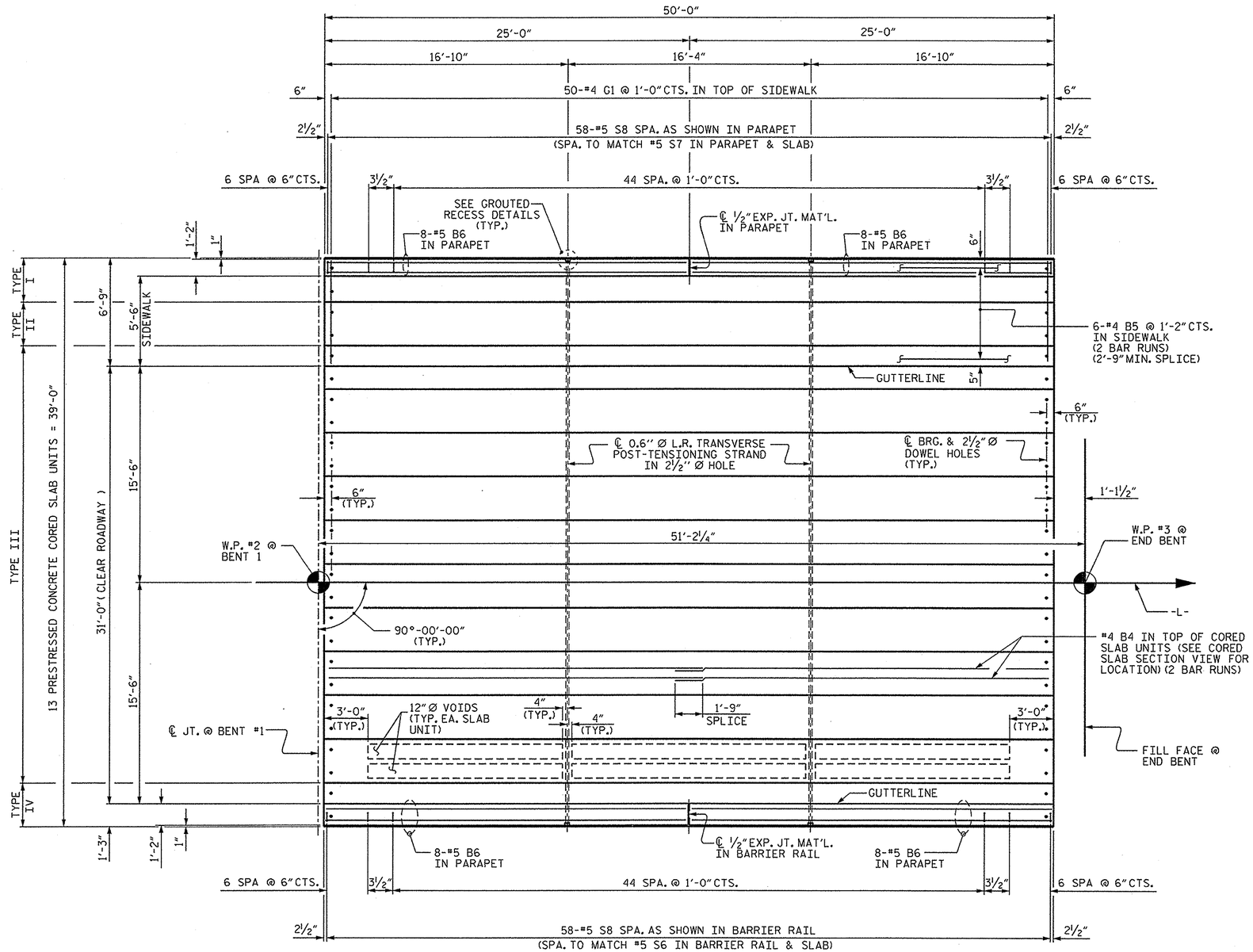

SPAN "B"

SHOWING REINFORCING STEEL IN PARAPETS AND SIDEWALK.
SEE SHEET 4 OF 4 FOR REINFORCING STEEL DETAILS IN CORED SLAB UNITS.

PROJECT NO. 17BP.1.R.36
CHOWAN COUNTY
STATION: 12+29.50 -L-

SHEET 3 OF 4

STATE OF NORTH CAROLINA
DEPARTMENT OF TRANSPORTATION
RALEIGH

SUPERSTRUCTURE

PLAN OF SPAN
SPAN B

NORTH CAROLINA PROFESSIONAL SEAL 14045 ENGINEER TIMOTHY L. COGGINS
11/22/13

REVISIONS						SHEET NO.
NO.	BY:	DATE:	NO.	BY:	DATE:	13
1			3			TOTAL SHEETS
2			4			36

DRAWN BY : N. Ruffin DATE : 8/15/13
CHECKED BY : T.L. COGGINS DATE : 11/15/13
DESIGN ENGINEER OF RECORD: N.M. RUFFIN DATE : 11/22/13

22-NOV-2013 15:49
S:\DPGI\Tim\Division 1 LIBR\17BP.1.R.36\nruffin\17BP1R36_sm_Design2_01.dgn
nruffin

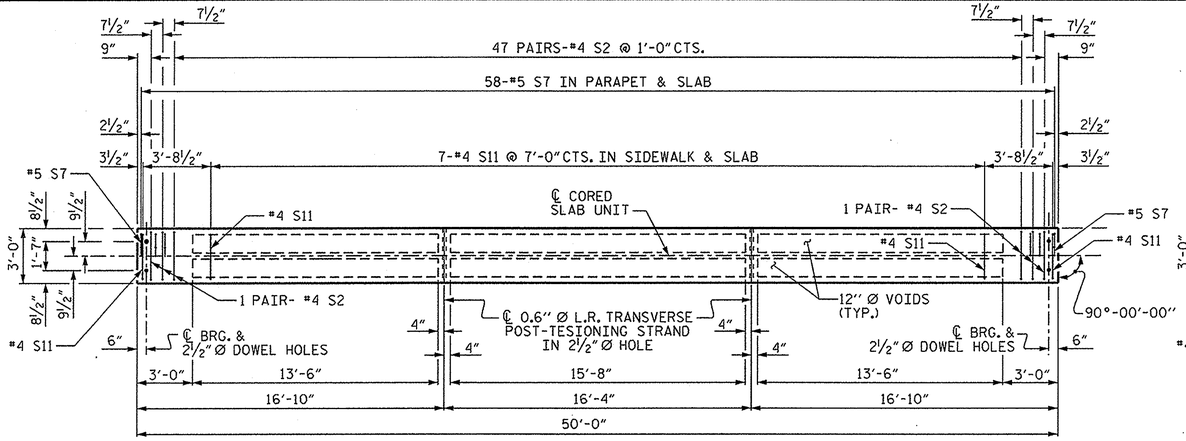

PLAN OF TYPE I CORED SLAB UNIT

FOR LOCATION OF S1 BARS AND S7 BARS AT ENDS OF SLAB, SEE "PART PLAN - EXTERIOR SECTIONS"

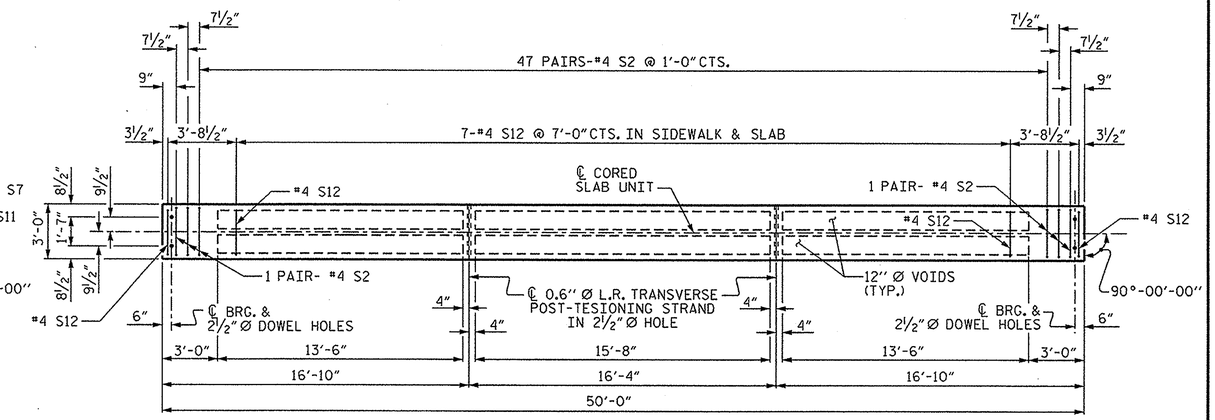

PLAN OF TYPE II CORED SLAB UNIT

FOR LOCATION OF S1 BARS AT ENDS OF SLAB, SEE "PART PLAN - EXTERIOR SECTIONS"

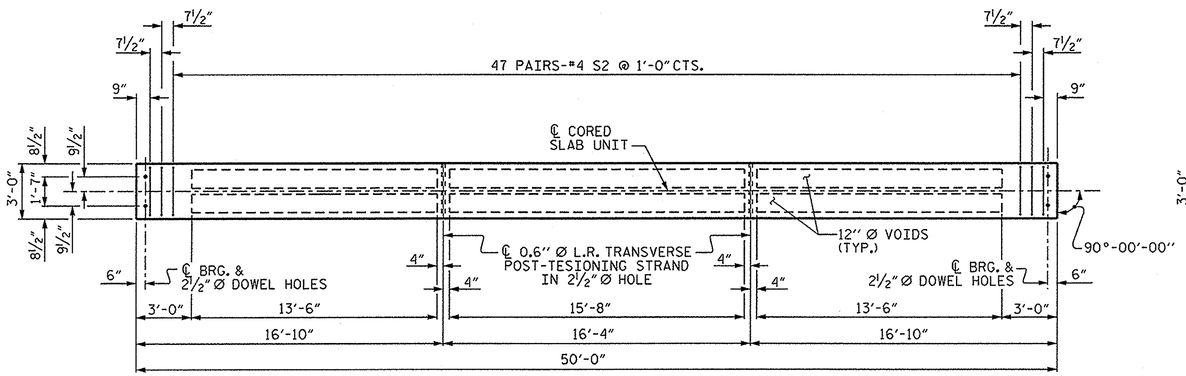

PLAN OF TYPE III CORED SLAB UNIT

FOR LOCATION OF S1 BARS AT ENDS OF SLAB, SEE "PART PLAN - EXTERIOR SECTIONS"

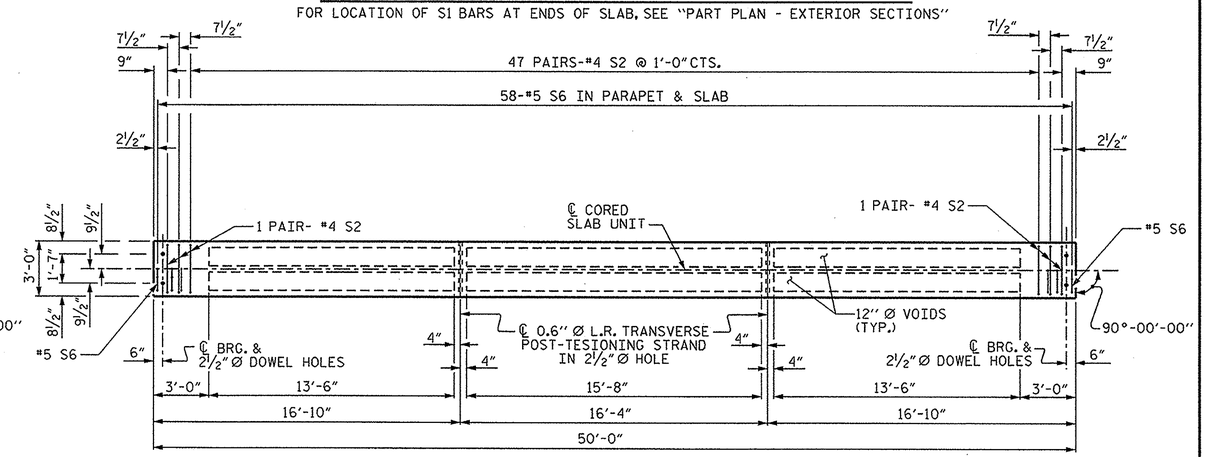

PLAN OF TYPE IV CORED SLAB UNIT

FOR LOCATION OF S1 BARS AND S6 BARS AT ENDS OF SLAB, SEE "PART PLAN - EXTERIOR SECTIONS"

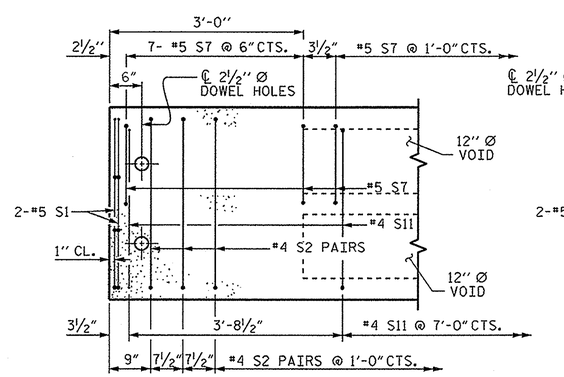

TYPE I EXTERIOR SECTION

TYPE II SIMILAR EXCEPT OMIT S7 BARS AND SUBSTITUTE #4 S12 BARS FOR #4 S11 BARS

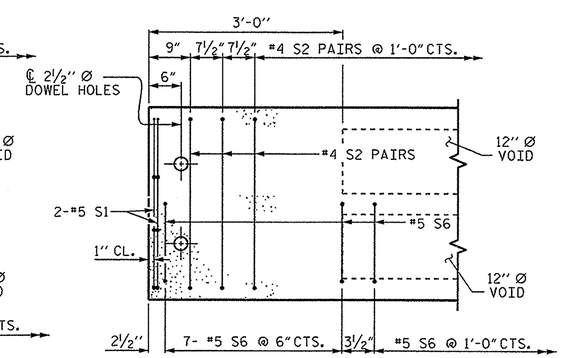

TYPE IV EXTERIOR SECTION

TYPE III SIMILAR EXCEPT OMIT S6 BARS

PART PLAN - EXTERIOR SECTIONS

PROJECT NO. 17BP.1.R.36

CHOWAN COUNTY

STATION: 12+29.50 -L-

SHEET 4 OF 4

STATE OF NORTH CAROLINA
DEPARTMENT OF TRANSPORTATION
RALEIGH

SUPERSTRUCTURE
PLAN OF SPAN
SPAN B
DETAILS

NORTH CAROLINA PROFESSIONAL SEAL 14045 ENGINEER TIMOTHY L. COGGINS
11/22/13

REVISIONS						SHEET NO.
NO.	BY:	DATE:	NO.	BY:	DATE:	14
1			3			TOTAL SHEETS
2			4			36

DRAWN BY :	N. Ruffin	DATE :	8/15/13
CHECKED BY :	T.L. COGGINS	DATE :	11/15/13
DESIGN ENGINEER OF RECORD:	N.M. RUFFIN	DATE :	11/22/13

22-NOV-2013 15:49
S:\DPG1\Tim\Division 1 LIBR\17BP.1.R.36\nruffin\17BP1R36_sm_Design2_01.dgn
nruffin

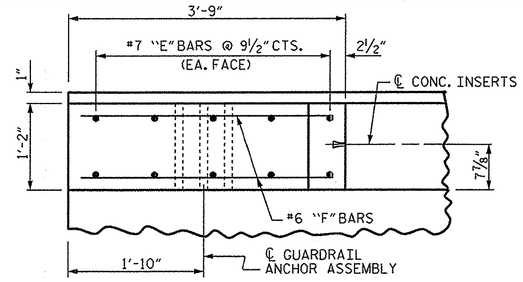

PLAN OF END POST

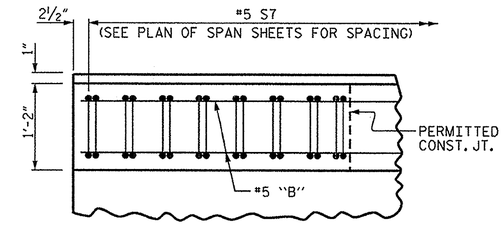

PLAN OF PARAPET

THE #5S7 AND #5S8 MAY BE SHIFTED AS NECESSARY TO PROVIDE CLEARANCE TO THE 1¼" Ø HOLES.

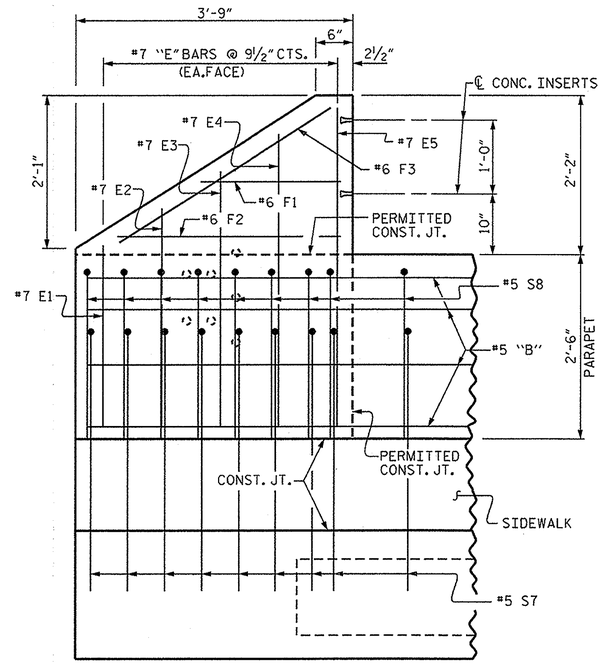

ELEVATION

REINFORCING STEEL IN SIDEWALK NOT SHOWN FOR CLARITY

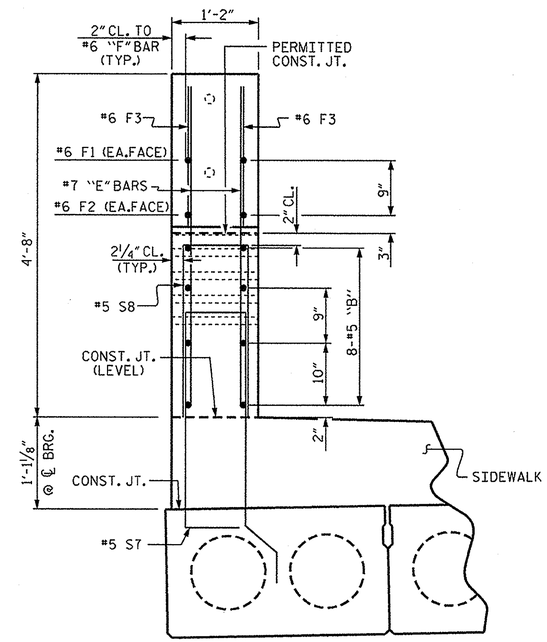

END VIEW

REINFORCING STEEL IN SIDEWALK NOT SHOWN FOR CLARITY

PARAPET AND END POST FOR TWO BAR RAIL

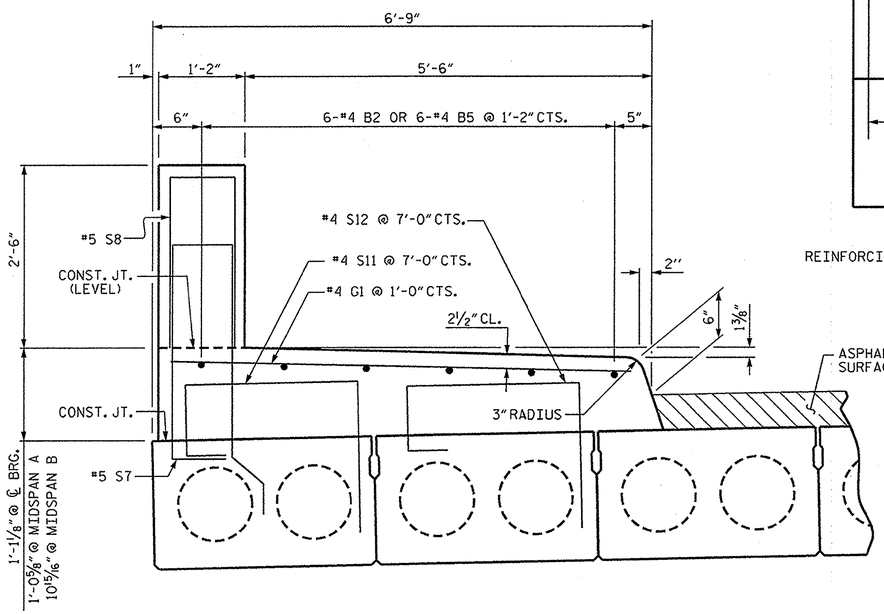

SECTION THROUGH SIDEWALK

#5 "B" BARS IN PARAPET NOT SHOWN FOR CLARITY
SEE PLAN OF SPAN SHEETS FOR LOCATION OF STEEL IN SIDEWALK

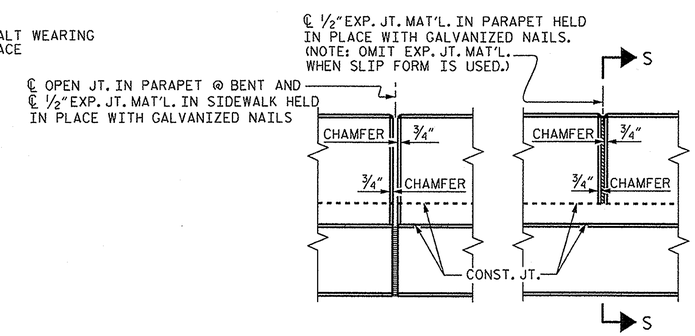

ELEVATION AT EXPANSION JOINTS

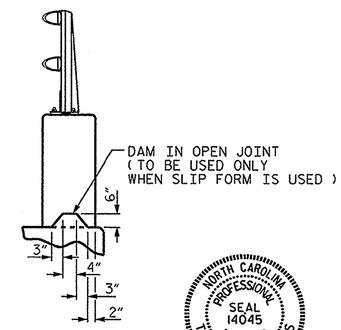

SECTION S-S

PARAPET DETAILS

BAR TYPE

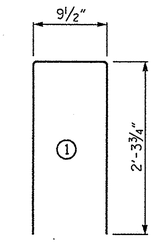

ALL BAR DIMENSIONS ARE OUT TO OUT

BILL OF MATERIAL

PARAPET AND END POSTS

BAR	NO.	SIZE	TYPE	LENGTH	WEIGHT
✻B3	16	#5	STR.	17'-2"	286
✻B6	16	#5	STR.	24'-8"	412
✻E1	4	#7	STR.	2'-5"	20
✻E2	4	#7	STR.	2'-11"	24
✻E3	4	#7	STR.	3'-5"	28
✻E4	4	#7	STR.	3'-11"	32
✻E5	4	#7	STR.	4'-4"	35
✻F1	4	#6	STR.	1'-10"	11
✻F2	4	#6	STR.	3'-0"	18
✻F3	4	#6	STR.	3'-4"	20
✻S8	101	#5	1	5'-5"	571

✻EPOXY COATED REINFORCING STEEL 1,457 LBS.

CLASS AA CONCRETE (PARAPET & END POSTS) 9.6 CU. YDS.

1'-2" X 2'-6" CONCRETE PARAPET 85.13 LIN. FT.

SIDEWALK

BAR	NO.	SIZE	TYPE	LENGTH	WEIGHT
✻B2	12	#4	STR.	18'-11'	152
✻B5	12	#4	STR.	26'-5'	212
✻G1	85	#4	STR.	6'-0'	341

✻EPOXY COATED REINFORCING STEEL (SIDEWALK) 705 LBS.

CLASS AA CONCRETE (SIDEWALK) 19.2 CU. YDS.

PROJECT NO. 17BP.1.R.36

CHOWAN COUNTY

STATION: 12+29.50 -L-

SHEET 1 OF 2

STATE OF NORTH CAROLINA
DEPARTMENT OF TRANSPORTATION
RALEIGH

SUPERSTRUCTURE
CONCRETE PARAPET, END POST, & SIDEWALK DETAILS LEFT SIDE

NORTH CAROLINA PROFESSIONAL SEAL 14045 ENGINEER TIMOTHY L. COGGINS
11/22/13

REVISIONS							
NO.	BY:	DATE:	NO.	BY:	DATE:	SHEET NO.	15
1			3			TOTAL SHEETS	36
2			4				

DRAWN BY : N. Ruffin DATE : 8/16/13
CHECKED BY : T.L. COGGINS DATE : 11/15/13
DESIGN ENGINEER OF RECORD: N.M. RUFFIN DATE : 11/21/13

22-NOV-2013 15:49
S:\DPG\Tlm\Division 1 LIBR\17BP.1.R.36\nruffin\17BP1R36_sm_Design2_01.dgn
nruffin

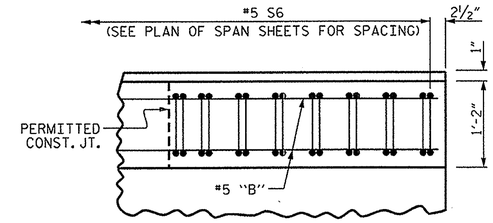

PLAN OF PARAPET

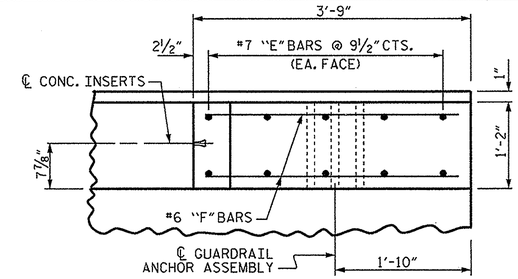

PLAN OF END POST

THE #5S7 AND #5S8 MAY BE SHIFTED AS NECESSARY TO PROVIDE CLEARANCE TO THE 1¼" Ø HOLES.

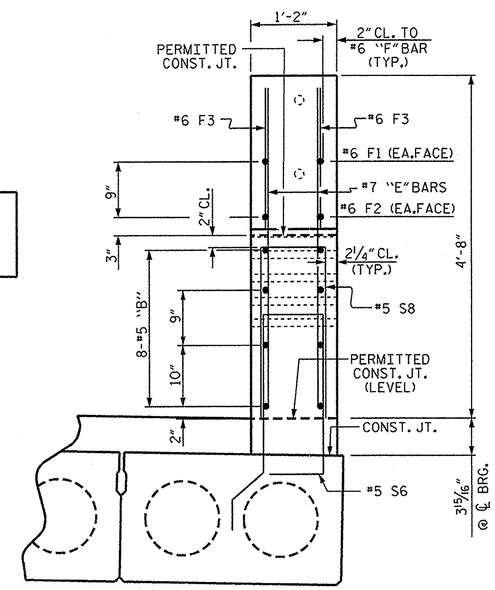

END VIEW

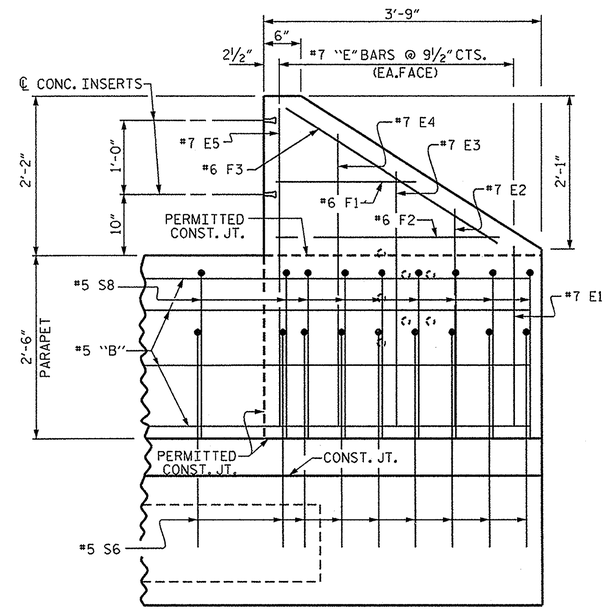

ELEVATION

PARAPET AND END POST FOR TWO BAR RAIL

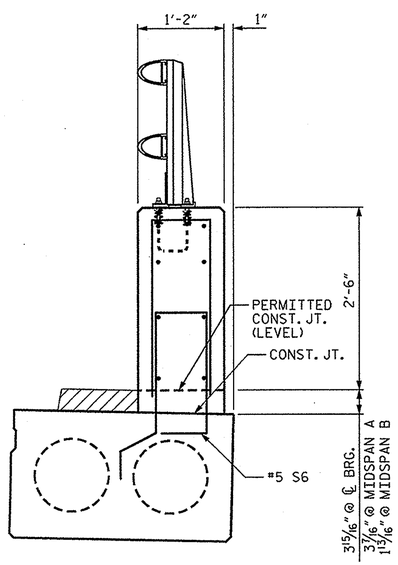

SECTION THROUGH PARAPET

#5 "B" BARS IN PARAPET NOT SHOWN FOR CLARITY
SEE "PARAPET AND END POST FOR TWO BAR RAIL".

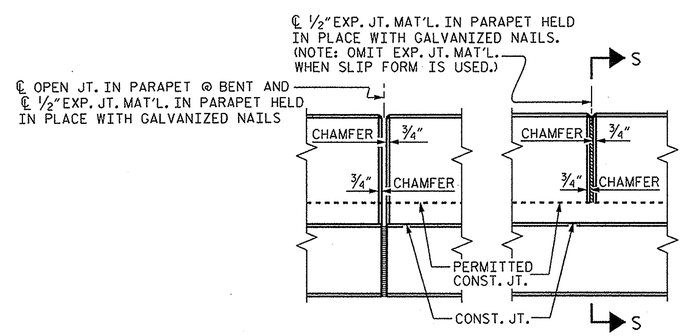

ELEVATION AT EXPANSION JOINTS

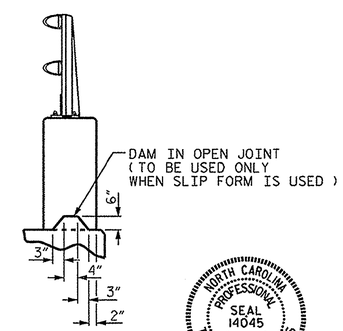

SECTION S-S

PARAPET DETAILS

BAR TYPE

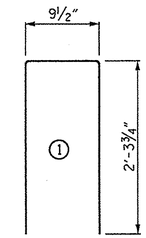

ALL BAR DIMENSIONS ARE OUT TO OUT

BILL OF MATERIAL

PARAPET AND END POSTS

BAR	NO.	SIZE	TYPE	LENGTH	WEIGHT
✻B3	16	#5	STR.	17'-2"	286
✻B6	16	#5	STR.	24'-8"	412
✻E1	4	#7	STR.	2'-5"	20
✻E2	4	#7	STR.	2'-11"	24
✻E3	4	#7	STR.	3'-5"	28
✻E4	4	#7	STR.	3'-11"	32
✻E5	4	#7	STR.	4'-4"	35
✻F1	4	#6	STR.	1'-10"	11
✻F2	4	#6	STR.	3'-0"	18
✻F3	4	#6	STR.	3'-4"	20
✻S8	101	#5	1	5'-5"	571

✻ EPOXY COATED REINFORCING STEEL	1,457 LBS.
CLASS AA CONCRETE (PARAPET & END POSTS)	10.5 CU. YDS.
1'-2" X 2'-6" CONCRETE PARAPET	85.13 LIN. FT.

PROJECT NO. 17BP.1.R.36
CHOWAN COUNTY
STATION: 12+29.50 -L-

SHEET 2 OF 2

STATE OF NORTH CAROLINA
DEPARTMENT OF TRANSPORTATION
RALEIGH

SUPERSTRUCTURE
CONCRETE PARAPET & END POST RIGHT SIDE

NORTH CAROLINA PROFESSIONAL SEAL 14045 ENGINEER TIMOTHY L. COGGINS
11/22/13

REVISIONS						SHEET NO.
NO.	BY:	DATE:	NO.	BY:	DATE:	16
1			3			TOTAL SHEETS
2			4			36

DRAWN BY : N. Ruffin DATE : 8/16/13
CHECKED BY : T.L. COGGINS DATE : 11/15/13
DESIGN ENGINEER OF RECORD: N.M. RUFFIN DATE : 11/21/13

22-NOV-2013 15:49
S:\OPGI\Tim\Division 1 LIBR\17BP.1.R.36\nruffin\17BP1R36_sm_Design2_01.dgn
nruffin

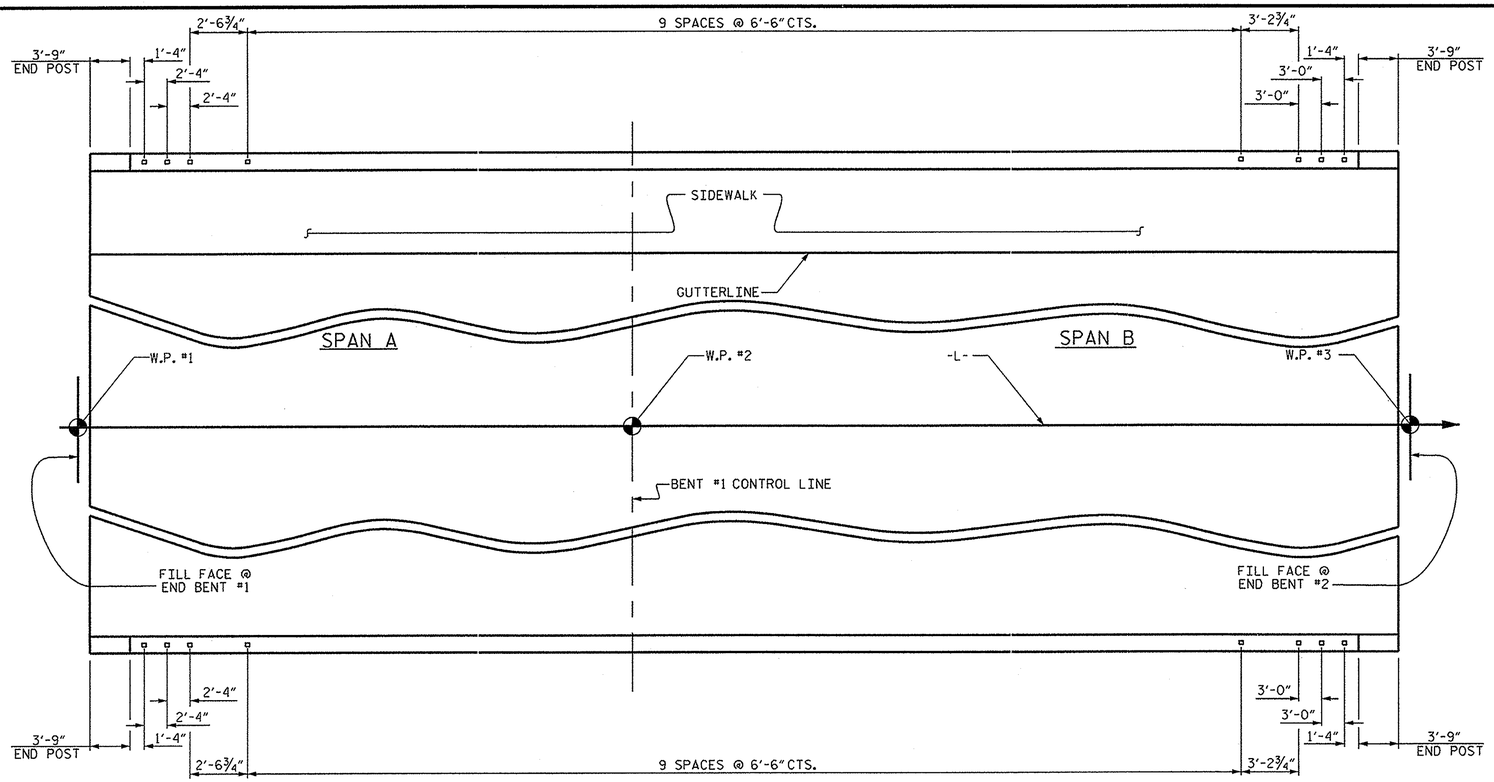

PLAN OF RAIL POST SPACINGS

NOTES

STRUCTURAL CONCRETE INSERT

THE STRUCTURAL CONCRETE INSERT ASSEMBLY SHALL CONSIST OF THE FOLLOWING COMPONENTS:

A. FERRULES SHALL BE MADE FROM STEEL MEETING THE REQUIREMENTS OF AASHTO M169, GRADE 12L14 AND SHALL HAVE A MINIMUM LENGTH OF THREADS OF 1½".

B. 1 - ¾" Ø X 1⅝" BOLT WITH WASHER. BOLT SHALL CONFORM TO THE REQUIREMENTS OF ASTM A307. BOLT AND WASHER SHALL BE GALVANIZED. (AT THE CONTRACTOR'S OPTION, STAINLESS STEEL BOLT AND WASHER MAY BE USED AS AN ALTERNATE FOR THE ¾" Ø X 1⅝" GALVANIZED BOLT AND WASHER. THEY SHALL CONFORM TO OR EXCEED THE MECHANICAL REQUIREMENTS OF ASTM A307. THE USE OF THIS ALTERNATE SHALL BE APPROVED BY THE ENGINEER.)

C. WIRE STRUT SHOWN IN THE CONCRETE INSERT ASSEMBLY DETAIL IS THE MINIMUM ALLOWABLE SIZE AND SHALL HAVE A MINIMUM TENSILE STRENGTH OF 100,000 PSI. AS AN OPTION, A 7/16" Ø WIRE STRUT WITH A MINIMUM TENSILE STRENGTH OF 90,000 PSI IS ACCEPTABLE.

NOTES

METAL RAIL TO END POST CONNECTION

THE METAL RAIL TO END POST CONNECTION SHALL CONSIST OF THE FOLLOWING COMPONENTS:

A. ½" PLATES SHALL CONFORM TO AASHTO M270 GRADE 36 AND SHALL BE GALVANIZED AFTER FABRICATION.

B. ¾" STRUCTURAL CONCRETE INSERT SHALL HAVE A WORKING LOAD SHEAR CAPACITY OF 4800 LBS. THE FERRULES SHALL ENGAGE A ¾"Ø X 1⅝" BOLT WITH 2" O.D. WASHER IN PLACE. THE ¾"Ø X 1⅝" BOLT SHALL HAVE N.C. THREADS.

C. CAP SCREWS FOR RAIL ATTACHMENT TO ANGLE SHALL CONFORM TO THE REQUIREMENTS OF ASTM F593 ALLOY 305 STAINLESS STEEL. CAP SCREWS TO BE CENTERED IN SLOTS AT 60°F.

D. STANDARD CLAMP BARS (SEE METAL RAIL SHEET).

E. ½" Ø PIPE SLEEVES (IF REQUIRED) TO BE GALVANIZED.

THE COST OF THE STANDARD CLAMP BARS AND CAP SCREWS USED IN THE METAL RAIL TO END POST CONNECTION SHALL BE INCLUDED IN THE UNIT CONTRACT PRICE BID FOR LINEAR FEET OF 2 BAR METAL RAILS.

THE ¾" STRUCTURAL CONCRETE INSERT WITH BOLT SHALL BE ASSEMBLED IN THE SHOP.

THE COST OF THE ¾" STRUCTURAL CONCRETE INSERT ASSEMBLY, AND THE ½" PLATES COMPLETE IN PLACE SHALL BE INCLUDED IN THE VARIOUS PAY ITEMS.

THE CONTRACTOR, AT HIS OPTION, MAY USE AN ADHESIVE BONDING SYSTEM IN LIEU OF THE STRUCTURAL CONCRETE INSERT EMBEDDED IN THE END POST. IF THE ADHESIVE BONDING SYSTEM IS USED, THE ¾" Ø X 1⅝" BOLT WITH WASHER SHALL BE REPLACED WITH A ¾"Ø X 6½" BOLT AND 2" O.D. WASHER. ALL SPECIFICATIONS THAT APPLY TO THE ¾" Ø X 1⅝" BOLT SHALL APPLY TO THE ¾"Ø X 6½" BOLT. FIELD TESTING OF THE ADHESIVE BONDING SYSTEM IS NOT REQUIRED.

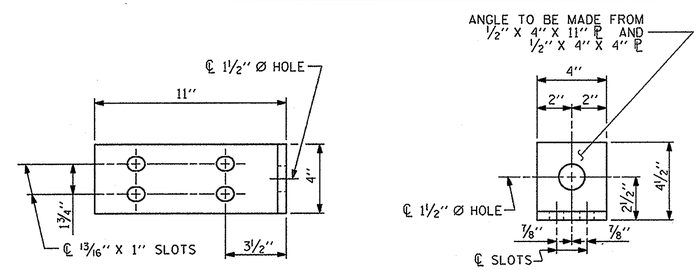

ELEVATION

END VIEW

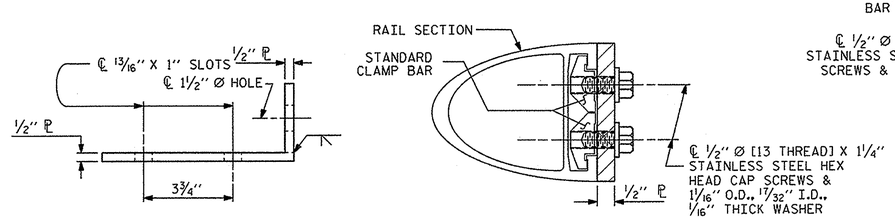

TOP VIEW

SECTION H-H

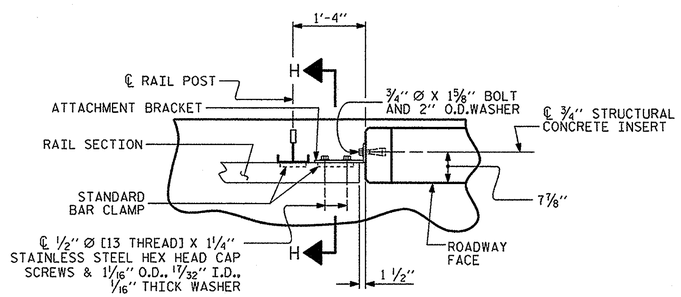

PLAN - RAIL AND END POST

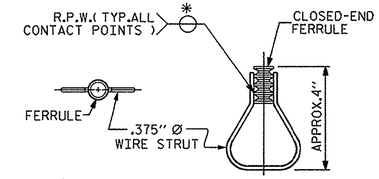

PLAN ELEVATION

STRUCTURAL CONCRETE INSERT

* EACH WELDED ATTACHMENT OF WIRE TO FERRULE SHALL DEVELOP THE TENSILE STRENGTH OF THE WIRE.

PROJECT NO. 17BP.1.R.36

CHOWAN COUNTY

STATION: 12+29.50 -L-

STATE OF NORTH CAROLINA
DEPARTMENT OF TRANSPORTATION
RALEIGH

STANDARD

RAIL POST SPACINGS AND END OF RAIL DETAILS

FOR TWO BAR METAL RAILS

NORTH CAROLINA PROFESSIONAL SEAL 14045 ENGINEER TIMOTHY L. COGGINS

11/22/13

DETAILS FOR ATTACHING METAL RAIL TO END POST

ASSEMBLED BY : N. Raffin	DATE : 8/26/13		
CHECKED BY : T.L. COGGINS	DATE : 11/15/13		
DRAWN BY : FCJ 1/88	REV. 5/7/03	RWW/JTE	
CHECKED BY : CRK 3/89	REV. 5/1/06	TLA/GM	
	REV. 10/1/11	MAA/GM	

REVISIONS								SHEET NO.
NO.	BY:	DATE:	NO.	BY:	DATE:			17
1			3					TOTAL SHEETS
2			4					36

22-NOV-2013 15:49
S:\DPGI\Tim\Division 1 LIBR\17BP.1.R.36\nruffin\17BP1R36_sm_Design2_01.dgn
nruffin

STD. NO. BMR2

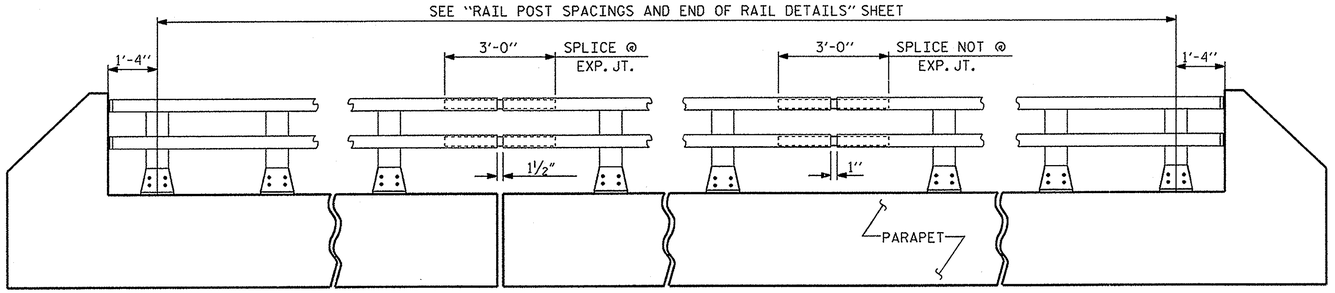

ELEVATION

NOTE : FOR ATTACHMENT OF METAL RAIL TO END POST, SEE STANDARD NO. BMR2.

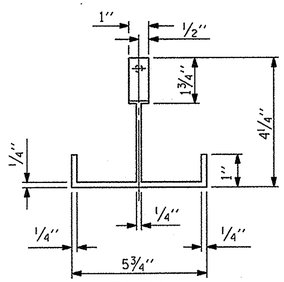

PLAN

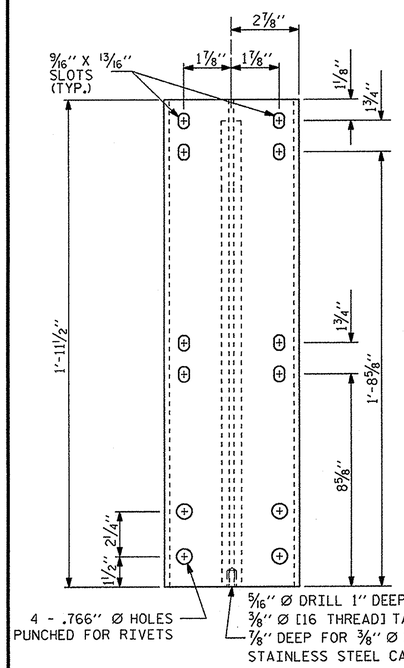

FRONT ELEVATION

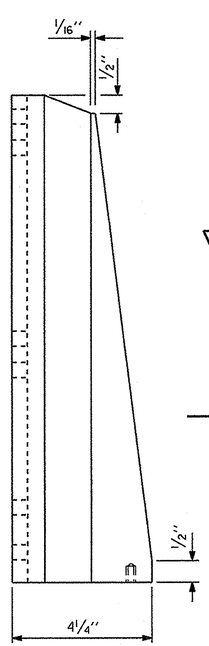

SIDE ELEVATION

DETAILS OF POST

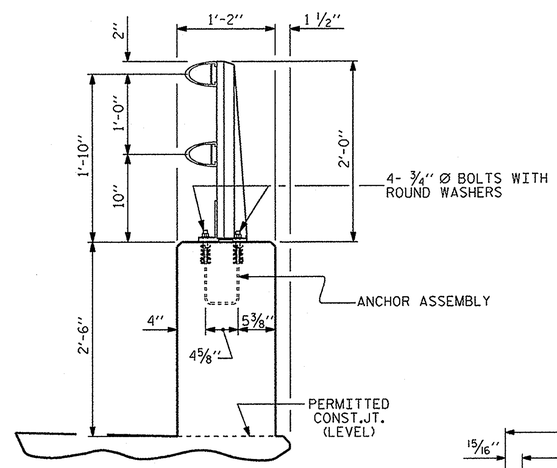

SECTION THRU PARAPET AND RAIL

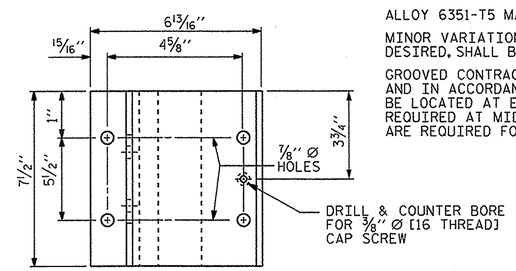

PLAN

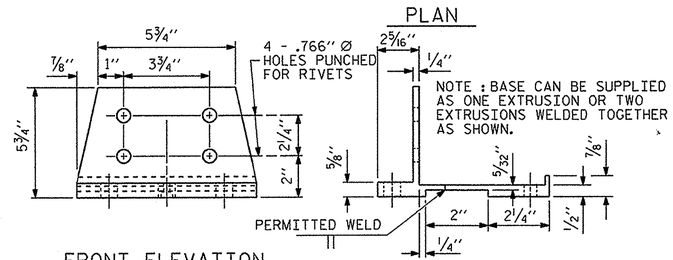

FRONT ELEVATION

SIDE ELEVATION

POST BASE DETAILS

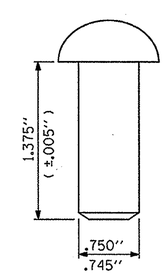

RIVET DETAIL

NOTES

AT THE CONTRACTOR'S OPTION, METAL RAIL MAY BE EITHER ALUMINUM OR GALVANIZED STEEL IN ACCORDANCE WITH THE REQUIREMENTS OF THE GENERAL NOTES AND THE FOLLOWING SPECIFICATIONS FOR THE ALTERNATE MATERIALS; HOWEVER, THE CONTRACTOR WILL BE REQUIRED TO USE THE SAME RAIL MATERIAL ON ALL STRUCTURES ON THE PROJECT FOR WHICH METAL RAIL IS DESIGNATED.

UNLESS OTHERWISE REQUIRED IN THE CONTRACT DOCUMENTS, THE CONTRACTOR HAS THE OPTION TO USE AN ALTERNATE TO THE 2 BAR METAL RAIL. THE ALTERNATE RAIL SHALL MEET THE REQUIREMENTS OF THE AASHTO LRFD BRIDGE DESIGN SPECIFICATIONS AND MUST BE LISTED ON THE DEPARTMENT'S APPROVED PRODUCTS LIST (APL) UNDER "2 BAR METAL RAIL ALTERNATE". ADJUSTMENTS TO THE CONCRETE PARAPET WILL NOT BE ALLOWED.

ALUMINUM RAILS

MATERIAL FOR POSTS, BASES AND RAILS, EXPANSION BARS AND CLAMP BARS SHALL BE ASTM B-221 ALLOY 6061-T6.

MATERIAL FOR RIVETS SHALL BE ASTM B316 ALLOY 6061-T6. RIVETS SHALL BE STANDARD BUTTON HEAD AND CONE POINT COLD DRIVEN AS PER DRAWING.

THE BASE OF RAIL POSTS, OR ANY OTHER ALUMINUM SURFACE IN CONTACT WITH CONCRETE SHALL BE THOROUGHLY COATED WITH AN ALUMINUM IMPREGNATED CAULKING COMPOUND OF APPROVED QUALITY.

MATERIAL FOR SHIMS TO BE ASTM B209 ALLOY 6061-T6.

GALVANIZED STEEL RAILS

MATERIAL AND GALVANIZING ARE TO CONFORM TO THE FOLLOWING SPECIFICATIONS:

POST, POST BASES, RAILS, EXPANSION BARS AND CLAMP BARS: AASHTO M270 GRADE 36 STRUCTURAL STEEL - GALVANIZED TO AASHTO M111.

RIVETS: RIVETS SHALL MEET THE REQUIREMENTS OF ASTM A502 FOR GRADE 1 RIVETS.

THE CUT ENDS OF GALVANIZED STEEL RAILING, AFTER GRINDING SMOOTH SHALL BE GIVEN TWO COATS OF ZINC RICH PAINT MEETING THE REQUIREMENTS OF FEDERAL SPECIFICATION MIL-P-26915 USAF TYPE 1, OR OF FEDERAL SPECIFICATIONS TT-P-641.

SHIMS: SHIMS SHALL MEET THE REQUIREMENTS OF ASTM A570 FOR GRADE 33 OR A611 FOR GRADE C AND SHALL BE GALVANIZED IN ACCORDANCE WITH AASHTO M111.

RAIL CAPS: RAIL CAPS SHALL MEET THE REQUIREMENTS OF ASTM A570 FOR GRADE 33 OR A611 FOR GRADE C AND SHALL BE GALVANIZED IN ACCORDANCE WITH AASHTO M111.

GENERAL NOTES

RAILING SHALL BE CONTINUOUS FROM END POST TO END POST OF BRIDGE. EACH JOINT IN RAIL LENGTH SHALL BE SPLICED AS DETAILED. PANEL LENGTHS OF RAIL SHALL BE ATTACHED TO A MINIMUM OF THREE POSTS.

FOR END OF RAIL TO CLEAR FACE OF CONCRETE END POST DIMENSION, SEE STANDARD NO. BMR2.

CAP SCREWS SHALL BE ASTM F593 ALLOY 305 STAINLESS STEEL. WASHERS SHALL MEET THE REQUIREMENTS OF ASTM F844 EXCEPT THEY SHALL BE MADE FROM ALLOY 304 STAINLESS STEEL.

CERTIFIED MILL REPORTS ARE REQUIRED FOR RAILS AND POSTS. SHOP INSPECTION IS NOT REQUIRED.

METAL RAIL POSTS SHALL BE SET NORMAL TO CURB GRADE.

METHOD OF MEASUREMENT FOR METAL RAILS: FOR LENGTH OF METAL RAILS TO BE PAID FOR, SEE THE STANDARD SPECIFICATIONS.

CURVED RAIL USAGE: WHERE RAILS ARE TO BE USED ON BRIDGES ON HORIZONTAL AND/OR VERTICAL CURVATURE THE CONTRACTOR MAY, AT HIS OPTION, HAVE THE REQUIRED CURVATURE IN THE RAIL FORMED IN THE SHOP OR IN THE FIELD. IN EITHER EVENT, THE RAIL SHALL CONFORM WITHOUT BUCKLING OR KINKING TO THE REQUIRED CURVATURE IN A UNIFORM MANNER ACCEPTABLE TO THE ENGINEER.

TO INSURE FUTURE IDENTIFICATION OF THE FABRICATOR, A PERMANENT IDENTIFYING MARK SHALL BE PLACED ON EACH POST. THE METHOD OF MARKING AND LOCATION SHALL BE SUCH THAT IT DOES NOT DETRACT FROM THE APPEARANCE OF THE POST, BUT REMAINS VISIBLE AFTER RAIL PLACEMENT.

SHIMS SHALL BE USED AS NECESSARY FOR POST ALIGNMENT.

ALLOY 6351-T5 MAY BE SUBSTITUTED FOR ALLOY 6061-T6 WHERE APPLICABLE.

MINOR VARIATIONS IN DETAILS OF METAL RAIL WILL BE CONSIDERED. DETAILS OF SUCH VARIATIONS, IF DESIRED, SHALL BE SUBMITTED FOR APPROVAL.

GROOVED CONTRACTION JOINTS, 1/2" IN DEPTH, SHALL BE TOOLED IN ALL EXPOSED FACES OF THE PARAPET AND IN ACCORDANCE WITH ARTICLE 825-10(B) OF THE STANDARD SPECIFICATIONS. A CONTRACTION JOINT SHALL BE LOCATED AT EACH THIRD POINT BETWEEN PARAPET EXPANSION JOINTS. ONLY ONE CONTRACTION JOINT IS REQUIRED AT MIDPOINT OF PARAPET SEGMENTS LESS THAN 20 FEET IN LENGTH AND NO CONTRACTION JOINTS ARE REQUIRED FOR THOSE SEGMENTS LESS THAN 10 FEET IN LENGTH.

PAY LENGTH = 155.25 LIN. FT.

PROJECT NO. 17BP.1.R.36

CHOWAN COUNTY

STATION: 12+29.50 -L-

SHEET 1 OF 2

STATE OF NORTH CAROLINA
DEPARTMENT OF TRANSPORTATION
RALEIGH

STANDARD

2 BAR METAL RAIL

NORTH CAROLINA PROFESSIONAL SEAL 14045 ENGINEER TIMOTHY L. COGGINS
11/22/13

ASSEMBLED BY : N. Ruffin	DATE : 8/26/13		
CHECKED BY : T.L. COGGINS	DATE : 11/15/13		
DRAWN BY : EEM 6/94	REV. 5/1/06	TLA/GM	
CHECKED BY : RGW 6/94	REV. 10/1/11	MAA/GM	
	REV. 6/13	MAA/GM	

REVISIONS						SHEET NO.
NO.	BY:	DATE:	NO.	BY:	DATE:	18
1			3			TOTAL SHEETS
2			4			36

22-NOV-2013 15:49
S:\DPGI\Tim\Division 1 LIBR\17BP.1.R.36\nruffin\17BP1R36_sm_Design2_01.dgn
nruffin

STD. NO. BMR3

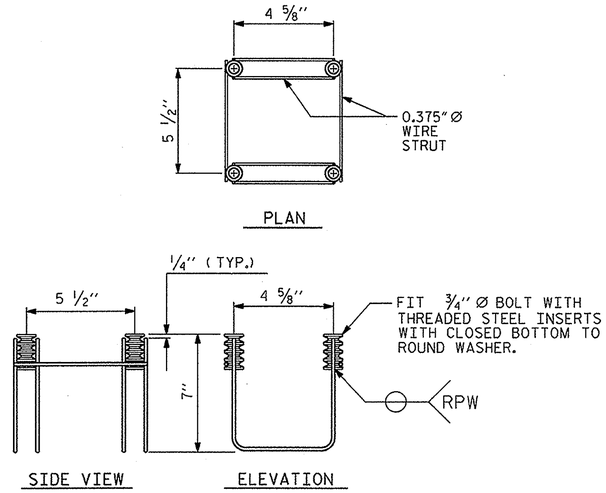

4-BOLT METAL RAIL ANCHOR ASSEMBLY

(32 ASSEMBLIES REQUIRED)

NOTES

STRUCTURAL CONCRETE ANCHOR ASSEMBLY

THE STRUCTURAL CONCRETE ANCHOR ASSEMBLY SHALL CONSIST OF THE FOLLOWING COMPONENTS :

A. FERRULES SHALL BE MADE FROM STEEL MEETING THE REQUIREMENTS OF AASHTO M169, GRADE 12L14 AND SHALL HAVE A MINIMUM LENGTH OF THREADS OF 2" FOR 3/4" FERRULES.

B. 4 - 3/4" Ø X 2 1/2" BOLTS WITH WASHERS. BOLTS SHALL CONFORM TO THE REQUIREMENTS OF ASTM A307. BOLTS AND WASHERS SHALL BE GALVANIZED. AT THE CONTRACTOR'S OPTION, STAINLESS STEEL BOLTS AND WASHERS MAY BE USED AS AN ALTERNATE FOR THE 3/4" Ø X 2 1/2" GALVANIZED BOLTS AND WASHERS. THEY SHALL CONFORM TO OR EXCEED THE MECHANICAL REQUIREMENTS OF ASTM A307. THE USE OF THIS ALTERNATE SHALL BE APPROVED BY THE ENGINEER.

C. WIRE STRUT SHOWN IN THE CONCRETE ANCHOR ASSEMBLY DETAIL IS THE MINIMUM ALLOWABLE SIZE AND SHALL HAVE A MINIMUM TENSILE STRENGTH OF 100,000 PSI. AS AN OPTION, A 7/16" Ø WIRE STRUT WITH A MINIMUM TENSILE STRENGTH OF 90,000 PSI IS ACCEPTABLE.

D. THE METAL RAIL ANCHOR ASSEMBLIES TO BE HOT DIPPED GALVANIZED TO CONFORM TO REQUIREMENTS OF AASHTO M111.

E. THE COST OF THE METAL RAIL ANCHOR ASSEMBLY WITH BOLTS AND WASHERS COMPLETE IN PLACE SHALL BE INCLUDED IN THE PRICE BID FOR LINEAR FEET OF METAL RAIL.

F. BOLTS TO BE TIGHTENED ONE-HALF TURN WITH A WRENCH FROM A FINGER-TIGHT POSITION.

THE CONTRACTOR MAY USE ADHESIVELY ANCHORED ANCHOR BOLTS IN PLACE OF THE METAL RAIL ANCHOR ASSEMBLY. LEVEL ONE FIELD TESTING IS REQUIRED, AND THE YIELD LOAD OF THE 3/4" Ø BOLT IS 10 KIPS. FOR ADHESIVELY ANCHORED ANCHOR BOLTS OR DOWELS, SEE THE STANDARD SPECIFICATIONS.

WHEN ADHESIVELY ANCHORED ANCHOR BOLTS ARE USED, BOLTS SHALL MEET THE REQUIREMENTS OF ASTM F593 ALLOY 304 STAINLESS STEEL WITH MINIMUM 75,000 PSI ULTIMATE STRENGTH. NUTS SHALL MEET THE REQUIREMENTS OF ASTM F594 ALLOY 304 STAINLESS STEEL AND WASHERS SHALL MEET THE REQUIREMENTS OF ASTM F844 EXCEPT THEY SHALL BE MADE FROM ALLOY 304 STAINLESS STEEL.

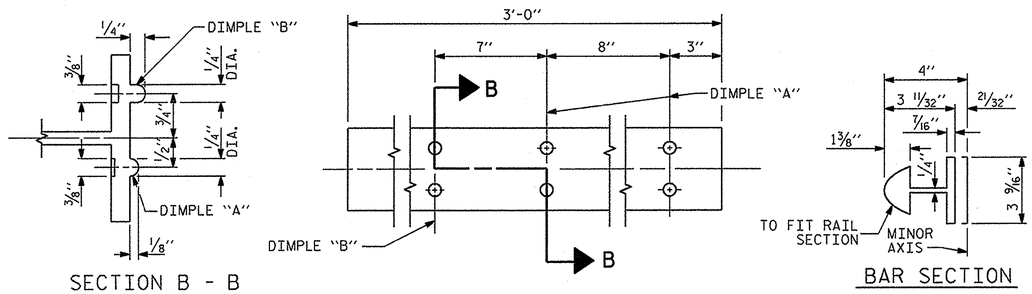

EXPANSION BAR DETAILS

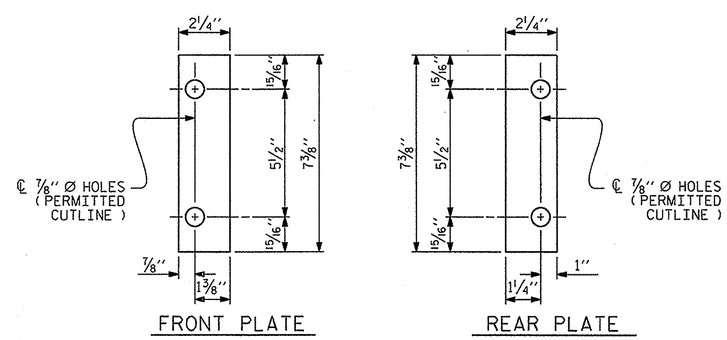

SHIM DETAILS

NOTE :
SHIMS MAY BE CUT ALONG PERMITTED CUTLINE OR SLOTTED TO EDGE OF PLATE TO FACILITATE PLACEMENT.

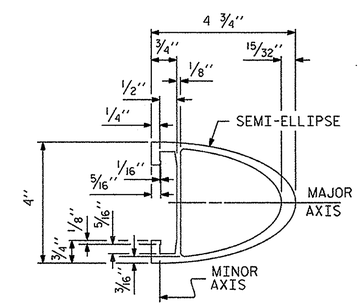

RAIL SECTION

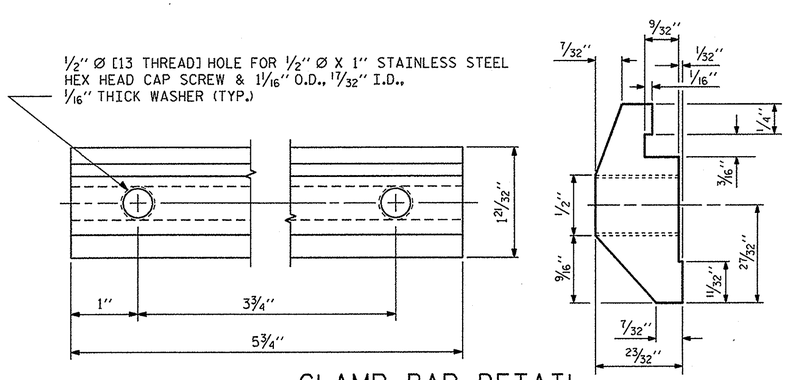

CLAMP BAR DETAIL

(4 REQUIRED PER POST)

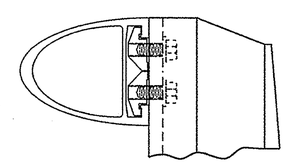

CLAMP ASSEMBLY

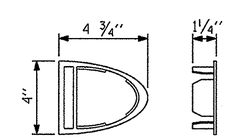

RAIL CAP

PROJECT NO. 17BP.1.R.36

CHOWAN COUNTY

STATION: 12+29.50 -L-

SHEET 2 OF 2

STATE OF NORTH CAROLINA
DEPARTMENT OF TRANSPORTATION
RALEIGH

STANDARD

2 BAR METAL RAIL

NORTH CAROLINA PROFESSIONAL SEAL 14045 ENGINEER TIMOTHY L. COGGINS
11/22/13

ASSEMBLED BY : N. Ruffin	DATE : 8/26/13		
CHECKED BY : T.L. COGGINS	DATE : 11/15/13		
DRAWN BY : EEM 6/94	REV. 8/16/99	MAB/LES	
CHECKED BY : RGW 6/94	REV. 5/1/06R	KMM/GM	
	REV. 10/1/11	MAA/GM	

REVISIONS								SHEET NO.
NO.	BY:	DATE:	NO.	BY:	DATE:			19
1			3					TOTAL SHEETS
2			4					36

22-NOV-2013 15:49
S:\DPG\Tim\Division 1 LIBR\17BP.1.R.36\nruffin\17BP1R36_sm_Design2_01.dgn
nruffin

STD. NO. BMR4

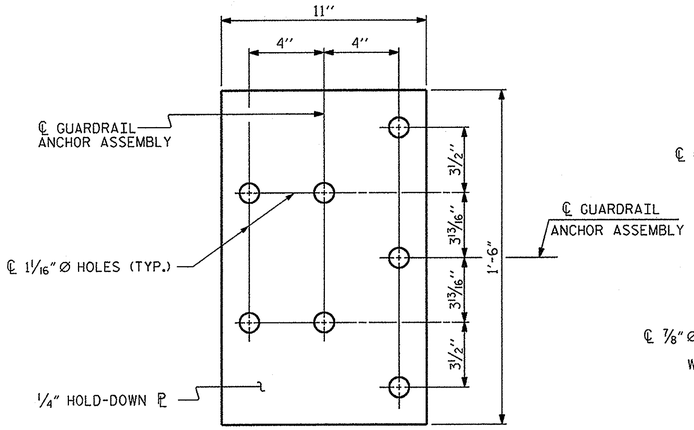

PLAN

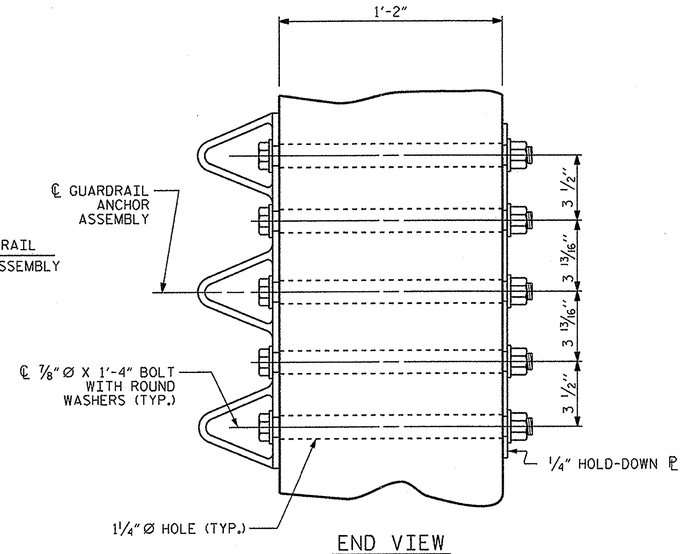

END VIEW

GUARDRAIL ANCHOR ASSEMBLY DETAILS

NOTES

THE GUARDRAIL ANCHOR ASSEMBLY SHALL CONSIST OF A 1/4" HOLD DOWN PLATE AND 7 - 7/8" Ø BOLTS WITH NUTS AND WASHERS.

THE HOLD-DOWN PLATE SHALL CONFORM TO AASHTO M270 GRADE 36. AFTER FABRICATION, THE HOLD-DOWN PLATE SHALL BE HOT-DIP GALVANIZED IN ACCORDANCE WITH AASHTO M111.

BOLTS SHALL CONFORM TO THE REQUIREMENTS OF ASTM A307 AND NUTS SHALL CONFORM TO THE REQUIREMENTS OF AASHTO M291. BOLTS, NUTS AND WASHERS SHALL BE GALVANIZED. AT THE CONTRACTOR'S OPTION, STAINLESS STEEL BOLTS, NUTS AND WASHERS MAY BE USED AS AN ALTERNATE FOR THE 7/8" Ø GALVANIZED BOLTS, NUTS AND WASHERS. THEY SHALL CONFORM TO OR EXCEED THE MECHANICAL REQUIREMENTS OF ASTM A307. THE USE OF THIS ALTERNATE SHALL BE APPROVED BY THE ENGINEER.

THE GUARDRAIL ANCHOR ASSEMBLY IS REQUIRED AT ALL POINTS WHERE APPROACH GUARDRAIL IS TO BE ATTACHED TO THE END OF THE PARAPET. FOR POINTS OF ATTACHMENT, SEE SKETCH.

AFTER INSTALLATION, THE EXPOSED THREAD OF THE BOLT SHALL BE BURRED WITH A SHARP POINTED TOOL.

THE COST OF THE GUARDRAIL ANCHOR ASSEMBLIES WITH BOLTS, NUTS AND WASHERS COMPLETE IN PLACE, SHALL BE INCLUDED IN THE VARIOUS PAY ITEMS.

THE VERTICAL REINFORCING BARS MAY BE SHIFTED SLIGHTLY IN THE END POST TO CLEAR ASSEMBLY BOLTS.

THE 1 1/4" Ø HOLES SHALL BE FORMED OR DRILLED WITH A CORE BIT. IMPACT TOOLS WILL NOT BE PERMITTED. ANY CONCRETE DAMAGED BY THIS WORK SHALL BE REPAIRED TO THE SATISFACTION OF THE ENGINEER.

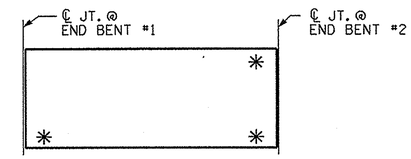

SKETCH SHOWING POINTS OF ATTACHMENT

✳ LOCATION OF GUARDRAIL ATTACHMENT

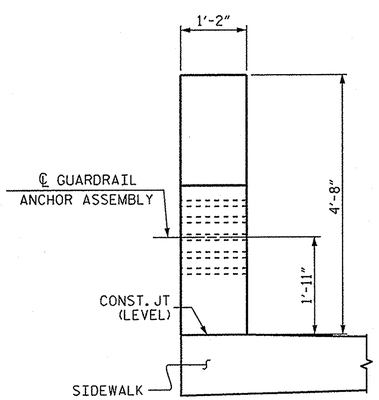

END VIEW
(TWO BAR METAL RAIL)
LEFTSIDE

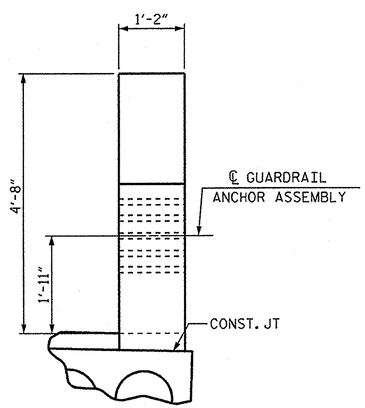

END VIEW
(TWO BAR METAL RAIL)
RIGHTSIDE

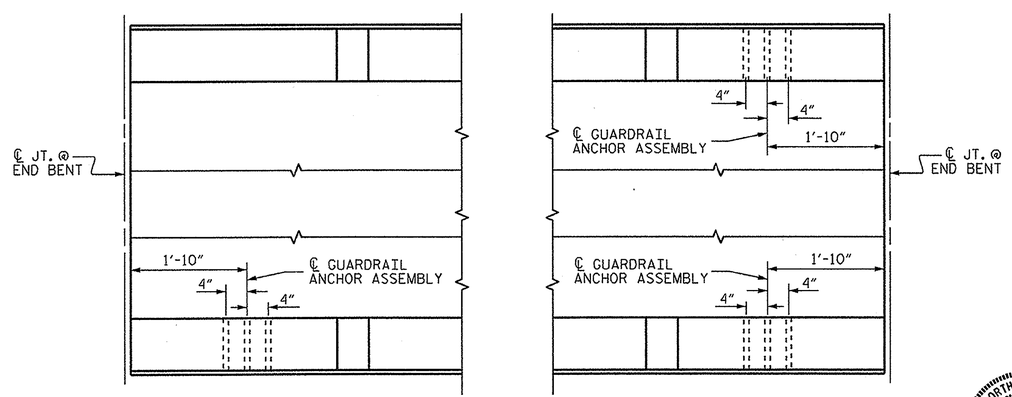

PLAN

LOCATION OF GUARDRAIL ANCHOR AT END POST

ASSEMBLED BY : N. Ruffin	DATE : 8/28/13		
CHECKED BY : T.L. COGGINS	DATE : 11/15/13		
DRAWN BY : MAA 5/10	REV. 10/1/11	MAA/GM	
CHECKED BY : GM 5/10	REV. 12/5/11	MAA/GM	
	REV. 6/13	MAA/GM	

NORTH CAROLINA PROFESSIONAL SEAL 14045 ENGINEER TIMOTHY L. COGGINS
11/22/13

PROJECT NO. 17BP.1.R.36
CHOWAN COUNTY
STATION: 12+29.50 -L-
SHEET OF

STATE OF NORTH CAROLINA
DEPARTMENT OF TRANSPORTATION
RALEIGH
STANDARD
GUARDRAIL ANCHORAGE DETAILS FOR METAL RAILS

REVISIONS						SHEET NO.
NO.	BY:	DATE:	NO.	BY:	DATE:	20
1			3			TOTAL SHEETS
2			4			36

(SHT 4) STD. NO. GRA3

22-NOV-2013 15:49
S:\DPGI\Tim\Division 1 LIBR\17BP.1.R.36\nruffin\17BP1R36_sm_Design2_01.dgn
nruffin

BILL OF MATERIAL FOR ONE CORED SLAB SECTION

SPAN A

				TYPE I		TYPE II		TYPE III		TYPE IV	
BAR	NUMBER	SIZE	TYPE	LENGTH	WEIGHT	LENGTH	WEIGHT	LENGTH	WEIGHT	LENGTH	WEIGHT
B1	4	#4	STR	18'-2"	49	18'-2"	49	18'-2"	49	18'-2"	49
S1	8	#5	2	4'-3"	35	4'-3"	35	4'-3"	35	4'-3"	35
S2	74	#4	2	5'-4"	264	5'-4"	264	5'-4"	264	5'-4"	264
* S6	43	#5	1	—	—	—	—	—	—	5'-11"	265
* S7	43	#5	1	7'-4"	329	—	—	—	—	—	—
* S11	7	#4	3	6'-0"	28	—	—	—	—	—	—
* S12	7	#4	3	—	—	5'-9"	27	—	—	—	—
REINFORCING STEEL					LBS. 348		LBS. 348		LBS. 348		LBS. 348
* EPOXY COATED REINFORCING STEEL					LBS. 357		LBS. 27		—		LBS. 265
5000 P.S.I. CONCRETE					5.1 CU. YDS.		5.1 CU. YDS.		5.1 CU. YDS.		5.1 CU. YDS.
0.6" Ø L.R. STRANDS	No.				10		10		10		10

BILL OF MATERIAL FOR ONE CORED SLAB SECTION

SPAN B

				TYPE I		TYPE II		TYPE III		TYPE IV	
BAR	NUMBER	SIZE	TYPE	LENGTH	WEIGHT	LENGTH	WEIGHT	LENGTH	WEIGHT	LENGTH	WEIGHT
B4	4	#4	STR	25'-8"	69	25'-8"	69	25'-8"	69	25'-8"	69
S1	8	#5	2	4'-3"	35	4'-3"	35	4'-3"	35	4'-3"	35
S2	102	#4	2	5'-4"	363	5'-4"	363	5'-4"	363	5'-4"	363
* S6	58	#5	1	—	—	—	—	—	—	5'-11"	358
* S7	58	#5	1	7'-4"	444	—	—	—	—	—	—
* S11	9	#4	3	6'-0"	36	—	—	—	—	—	—
* S12	9	#4	3	—	—	5'-9"	35	—	—	—	—
REINFORCING STEEL					LBS. 467		LBS. 467		LBS. 467		LBS. 467
* EPOXY COATED REINFORCING STEEL					LBS. 480		LBS. 35		—		LBS. 358
7000 P.S.I. CONCRETE					7.1 CU. YDS.		7.1 CU. YDS.		7.1 CU. YDS.		7.1 CU. YDS.
0.6" Ø L.R. STRANDS	No.				20		20		20		20

GRADE 270 STRANDS

	0.6" Ø L.R.
AREA (SQUARE INCHES)	0.217
ULTIMATE STRENGTH (LBS. PER STRAND)	58,600
APPLIED PRESTRESS (LBS. PER STRAND)	43,950

BAR TYPES

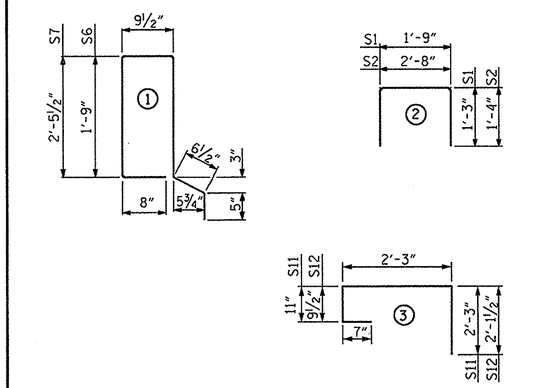

ALL BAR DIMENSIONS ARE OUT TO OUT.

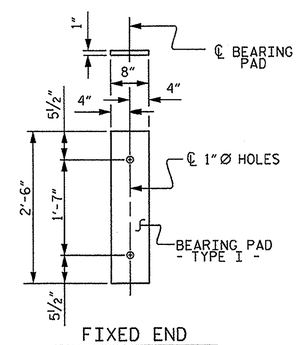

FIXED END
(TYPE I - 52 REQ'D.)

ELASTOMERIC BEARING DETAIL

ELASTOMER IN BEARINGS SHALL BE 50 DUROMETER HARDNESS.

NOTES

ALL PRESTRESSING STRANDS SHALL BE 7-WIRE LOW RELAXATION GRADE 270 STRANDS AND SHALL CONFORM TO AASHTO M203 EXCEPT FOR SAMPLING REQUIREMENTS WHICH SHALL BE IN ACCORDANCE WITH THE STANDARD SPECIFICATIONS.

ALL REINFORCING STEEL CAST WITH THE CORED SLAB SECTIONS SHALL BE GRADE 60 AND SHALL BE INCLUDED IN THE UNIT PRICE BID FOR PRESTRESSED CONCRETE CORED SLABS.

RECESSES FOR TRANSVERSE STRANDS SHALL BE GROUTED AFTER THE TENSIONING OF THE STRANDS.

THE 2½" Ø DOWEL HOLES AT FIXED ENDS OF SLAB SECTIONS SHALL BE FILLED WITH GROUT.

THE BACKER RODS SHALL CONFORM TO THE REQUIREMENTS OF TYPE M BOND BREAKER. SEE SECTION 1028 OF THE STANDARD SPECIFICATIONS.

WHEN CORED SLABS ARE CAST, AN INTERNAL HOLD-DOWN SYSTEM SHALL BE EMPLOYED TO PREVENT VOIDS FROM RISING OR MOVING SIDEWAYS. AT LEAST SIX WEEKS PRIOR TO CASTING CORED SLABS, THE CONTRACTOR SHALL SUBMIT TO THE ENGINEER FOR REVIEW AND COMMENT, DETAILED DRAWINGS OF THE PROPOSED HOLD-DOWN SYSTEM. IN ADDITION TO STRUCTURAL DETAILS, LOCATION AND SPACING OF THE HOLD-DOWNS SHALL BE INDICATED.

PLACEMENT OF THE ASPHALT WEARING SURFACE SHALL OCCUR AFTER CASTING THE CONCRETE PARAPET AND SIDEWALK.

THE TRANSFER OF LOAD FROM THE ANCHORAGES TO THE CORED SLAB UNIT SHALL BE DONE WHEN THE CONCRETE HAS REACHED A COMPRESSIVE STRENGTH OF NOT LESS THAN 4000 PSI FOR SPAN A AND 5600 PSI FOR SPAN B.

ALL REINFORCING STEEL IN PARAPET, END POSTS, AND SIDEWALK SHALL BE EPOXY COATED.

PRESTRESSING STRANDS SHALL BE CUT FLUSH WITH THE CORED SLAB UNIT ENDS.

APPLY EPOXY PROTECTIVE COATING TO CORED SLAB UNIT ENDS.

GROOVED CONTRACTION JOINTS, ½" IN DEPTH, SHALL BE TOOLED IN ALL EXPOSED FACES OF THE PARAPET AND SIDEWALK IN ACCORDANCE WITH ARTICLE 825-10(B) OF THE STANDARD SPECIFICATIONS. A CONTRACTION JOINT SHALL BE LOCATED AT EACH THIRD POINT BETWEEN EXPANSION JOINTS. ONLY ONE CONTRACTION JOINT IS REQUIRED AT MIDPOINT OF SEGMENTS LESS THAN 20 FEET IN LENGTH AND NO CONTRACTION JOINTS ARE REQUIRED FOR THOSE SEGMENTS LESS THAN 10 FEET IN LENGTH.

TRANSVERSE POST TENSIONING OF THE CORED SLAB UNITS SHALL BE DONE IN ACCORDANCE WITH THE STANDARD SPECIFICATIONS.

FOR GROUT FOR STRUCTURES, SEE SPECIAL PROVISIONS.

QUANTITIES FOR SIDEWALK ITEMS SHALL BE INCLUDED IN CLASS AA CONCRETE AND EPOXY COATED REINFORCING STEEL TOTALS.

THE #4 S2 STIRRUPS MAY BE SHIFTED AS NECESSARY TO MAINTAIN 1" CLEAR TO THE GROUTED RECESS.

PRESTRESSED CONCRETE CORED SLAB UNITS ARE DESIGNED FOR 0 PSI TENSION IN THE PRECOMPRESSED TENSILE ZONE UNDER ALL LOADING CONDITIONS.

PRESTRESSED CONCRETE CORED SLAB UNITS SHALL CONTAIN CALCIUM NITRITE CORROSION INHIBITOR IN ACCORDANCE WITH THE STANDARD SPECIFICATIONS.

DEAD LOAD DEFLECTION AND CAMBER

3'-0" x 1'-9" 0.6" Ø L.R. STRAND		SPAN A	SPAN B
CAMBER (SLAB ALONE IN PLACE)	↑	⅝"	2 9/16"
DEFLECTION DUE TO SUPERIMPOSED DEAD LOAD**	↓	⅛"	⅜"
FINAL CAMBER	↑	½"	2 3/16"

** INCLUDES FUTURE WEARING SURFACE

CORED SLABS REQUIRED

		NUMBER	LENGTH	TOTAL LENGTH
SPAN A	TYPE I	1	35'-0"	35'-0"
	TYPE II	1	35'-0"	35'-0"
	TYPE III	10	35'-0"	350'-0"
	TYPE IV	1	35'-0"	35'-0"
SPAN B	TYPE I	1	50'-0"	50'-0"
	TYPE II	1	50'-0"	50'-0"
	TYPE III	10	50'-0"	500'-0"
	TYPE IV	1	50'-0"	50'-0"
TOTAL		26	—	1105'-0"

PROJECT NO. 17BP.1.R.36
CHOWAN COUNTY
STATION: 12+29.50 -L-

STATE OF NORTH CAROLINA
DEPARTMENT OF TRANSPORTATION
RALEIGH

SUPERSTRUCTURE

BILL OF MATERIAL

NORTH CAROLINA PROFESSIONAL SEAL 14045 ENGINEER TIMOTHY L. COGGINS
12/23/13

REVISIONS								SHEET NO. 21
NO.	BY:	DATE:	NO.	BY:	DATE:			TOTAL SHEETS 36
1			3					
2			4					

DRAWN BY : N. Ruffin DATE : 8/28/13
CHECKED BY : T.L. COGGINS DATE : 11/15/13
DESIGN ENGINEER OF RECORD: N.M. RUFFIN DATE : 11/21/13

23-DEC-2013 11:53
S:\DPG1\Tlm\Division 1 LIBR\17BP.1.R.36\nruffin\17BP1R36_sm_Design2_01.dgn
tcoggins

NCBDS

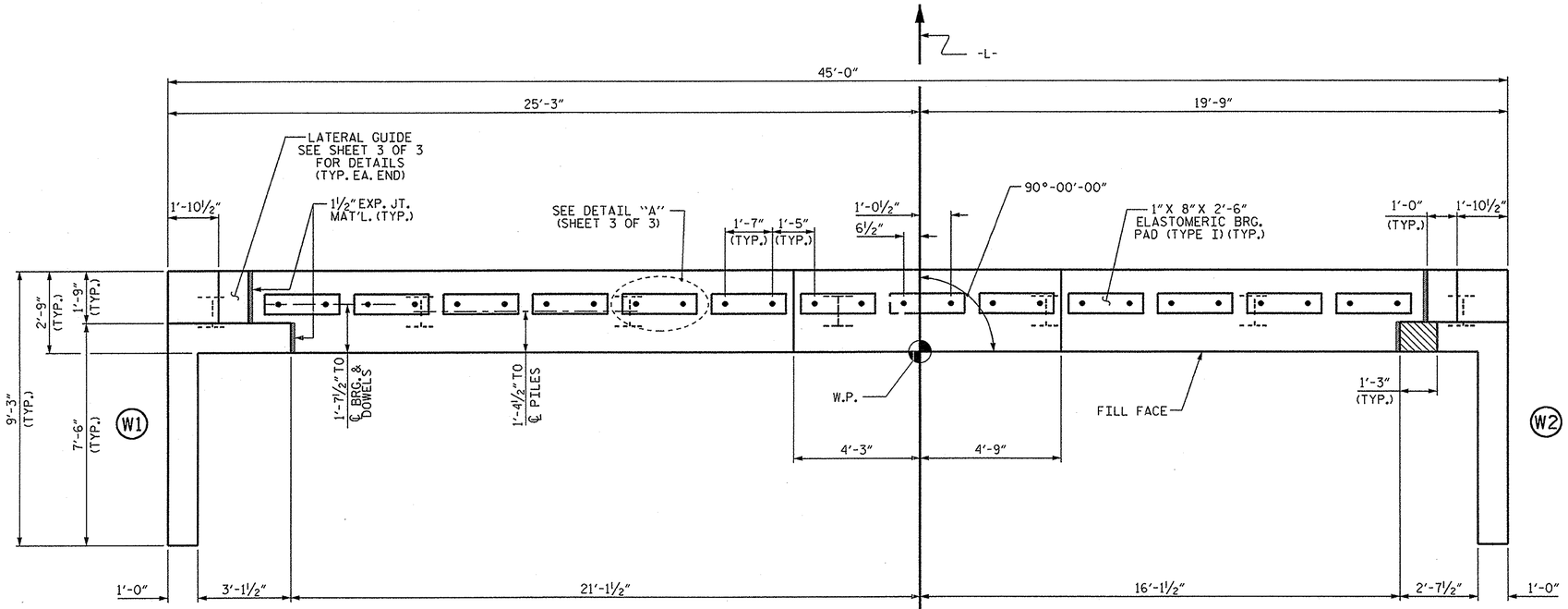

PLAN

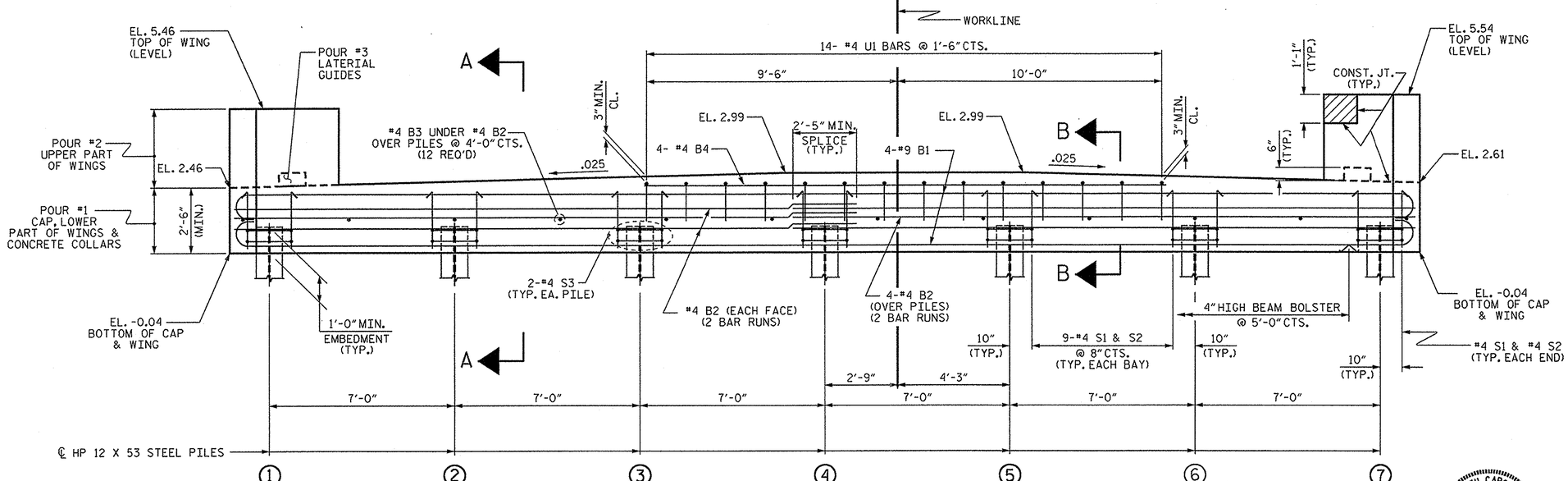

ELEVATION

FOR SECTION A-A AND SECTION B-B, SEE SHEET 3 OF 3.
CONCRETE COLLARS FOR STEEL PILES NOT SHOWN IN PLAN AND ELEVATION VIEWS FOR CLARITY.
SEE "CORROSION PROTECTION FOR STEEL PILES DETAIL", SHEET 3 OF 3.

NOTES

STIRRUPS IN CAP MAY BE SHIFTED AS NECESSARY TO CLEAR DOWELS.

THE LATERAL GUIDES ARE NOT TO BE POURED UNTIL AFTER THE CORED SLAB UNITS ARE IN PLACE.

THE CONCRETE IN THE SHADED AREA OF THE WING SHALL BE POURED AFTER THE CONCRETE PARAPET IS CAST IF SLIP FORMING IS USED.

FOR PILE SPLICE DETAILS, SEE SHEET 3 OF 3.

FOR WING DETAILS, SEE SHEET 2 OF 3.

THE CONTRACTOR HAS THE OPTION TO OMIT THE LATERAL GUIDE IF APPROVED BY THE ENGINEER.

INSTALL THE 4" DIA. DRAIN PIPE THROUGH THE WING WALL AS REQUIRED FOR REINFORCED BRIDGE APPROACH FILLS. SEE THE ROADWAY PLANS. REINFORCING STEEL IN THE WING WALL MAY BE SHIFTED AS NECESSARY TO CLEAR THE DRAIN PIPE.

THE CONCRETE IN THE END BENT CAP OF END BENT NO. 1 SHALL CONTAIN SILICA FUME. SILICA FUME SHALL BE SUBSTITUTED FOR 5% OF THE PORTLAND CEMENT BY WEIGHT. IF THE OPTION OF ARTICLE 1024-1 OF THE STANDARD SPECIFICATIONS TO PARTIALLY SUBSTITUTE CLASS F FLY ASH FOR PORTLAND CEMENT IS EXERCISED, THEN THE RATE OF FLY ASH SUBSTITUTION SHALL BE REDUCED TO 1.0 LB OF FLY ASH PER 1.0 LB. NO PAYMENT WILL BE MADE FOR THIS SUBSTITUTION AS IT IS CONSIDERED INCIDENTAL TO THE VARIOUS PAY ITEMS.

PROJECT NO. 17BP.1.R.36
CHOWAN COUNTY
STATION: 12+29.50 -L-

SHEET 1 OF 3

STATE OF NORTH CAROLINA
DEPARTMENT OF TRANSPORTATION
RALEIGH

SUBSTRUCTURE

END BENT No. 1

NORTH CAROLINA PROFESSIONAL SEAL 14045 ENGINEER TIMOTHY L. COGGINS
11/22/13

REVISIONS						SHEET NO. 22
NO.	BY:	DATE:	NO.	BY:	DATE:	TOTAL SHEETS 36
1			3			
2			4			

DRAWN BY : N. Ruffin DATE : 9/6/13
CHECKED BY : T.L. COGGINS DATE : 11/15/13
DESIGN ENGINEER OF RECORD: N.M. RUFFIN DATE : 11/21/13

22-NOV-2013 15:49
S:\DPG1\Tlm\Division 1 LIBR\17BP.1.R.36\nruffin\17BP1R36_sm_Design2_01.dgn
nruffin

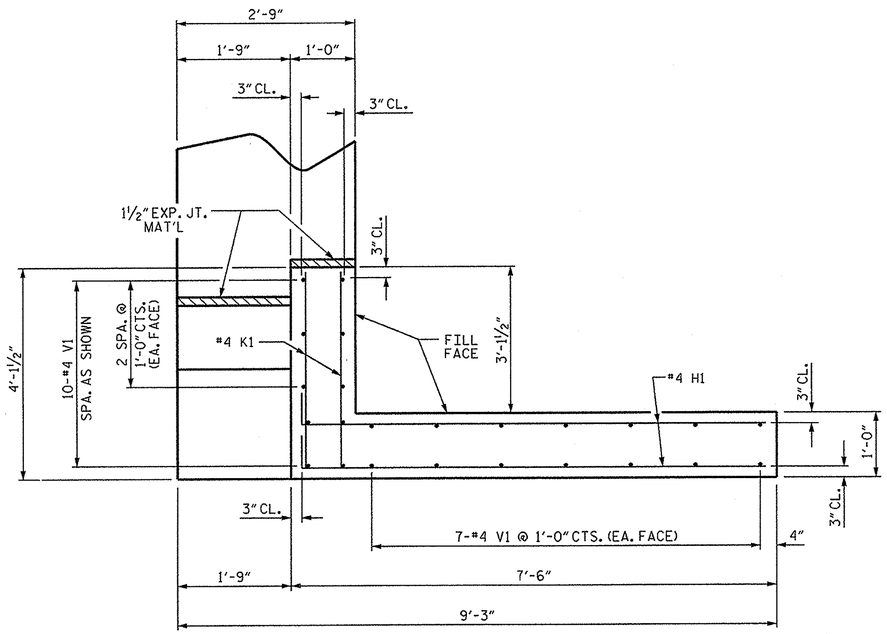

PLAN OF WING (W1)

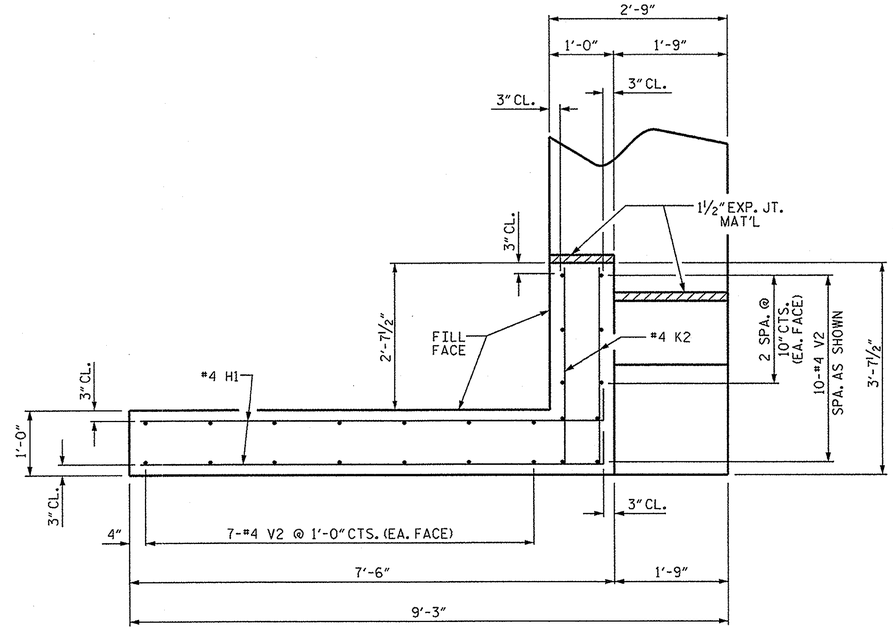

PLAN OF WING (W2)

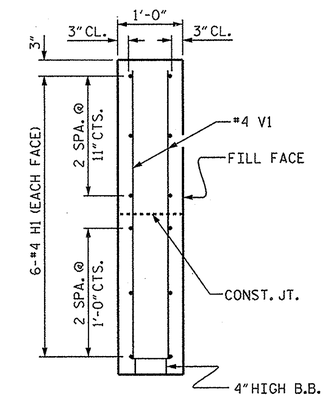

SECTION X-X

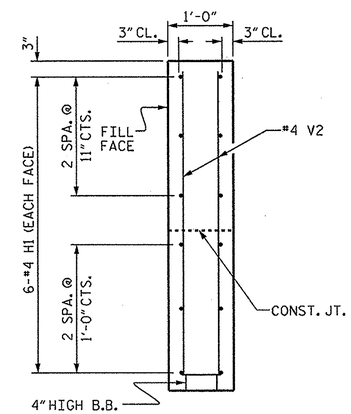

SECTION Y-Y

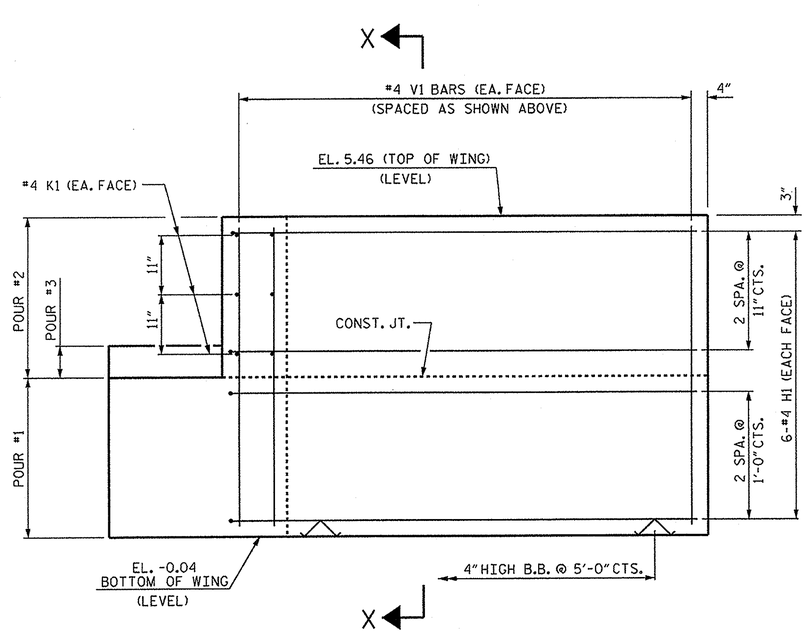

ELEVATION OF WING (W1)

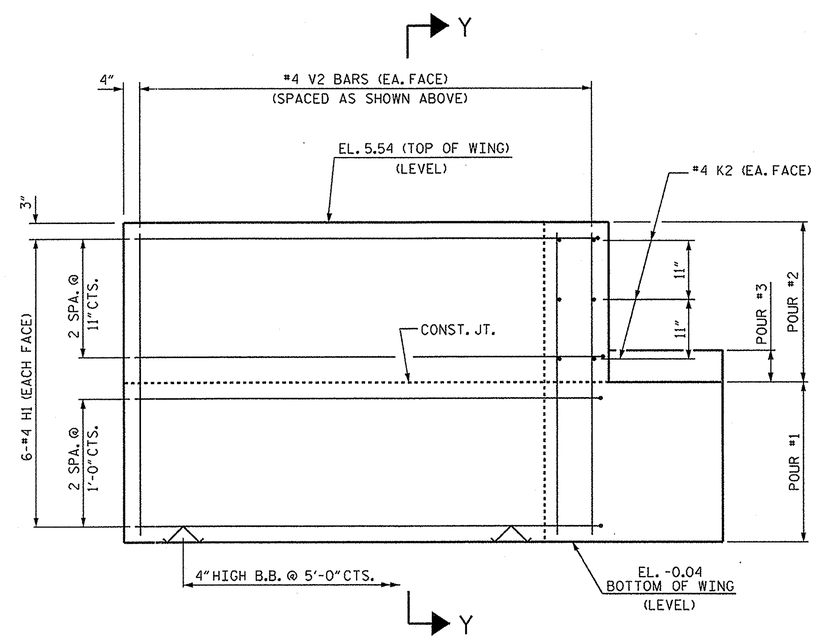

ELEVATION OF WING (W2)

WING DETAILS

PROJECT NO. 17BP.1.R.36

CHOWAN COUNTY

STATION: 12+29.50 -L-

SHEET 2 OF 3

STATE OF NORTH CAROLINA
DEPARTMENT OF TRANSPORTATION
RALEIGH

SUBSTRUCTURE

END BENT No. 1
WING DETAILS

REVISIONS						SHEET NO.
NO.	BY:	DATE:	NO.	BY:	DATE:	23
1			3			TOTAL SHEETS
2			4			36

NORTH CAROLINA PROFESSIONAL SEAL 14045 ENGINEER TIMOTHY L. COGGINS
11/22/13

DRAWN BY :	N. Ruffin	DATE :	9/6/13
CHECKED BY :	T.L. COGGINS	DATE :	11/15/13
DESIGN ENGINEER OF RECORD:	N.M. RUFFIN	DATE :	11/21/13

22-NOV-2013 15:49
S:\DPGI\Tlm\Division 1 LIBR\17BP.1.R.36\nruffin\17BP1R36_sm_Design2_01.dgn
nruffin

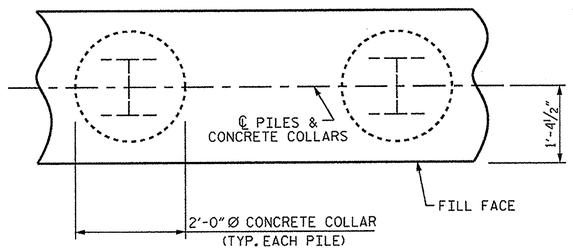

PLAN

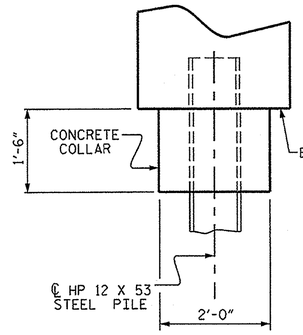

ELEVATION

CORROSION PROTECTION FOR STEEL PILES DETAIL

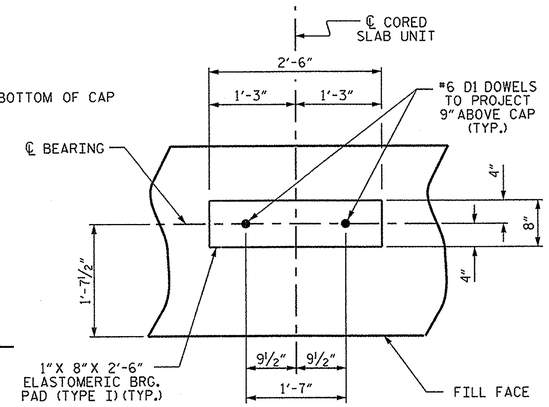

DETAIL "A"

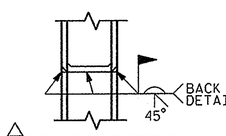

△ PILE VERTICAL

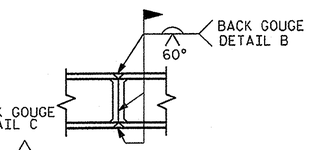

△ PILE HORIZONTAL OR VERTICAL

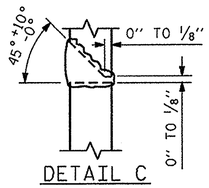

DETAIL C

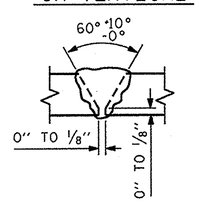

DETAIL B

△ POSITION OF PILE DURING WELDING.

PILE SPLICE DETAILS

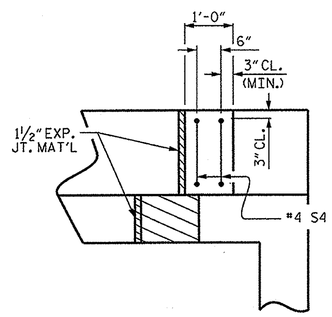

PLAN

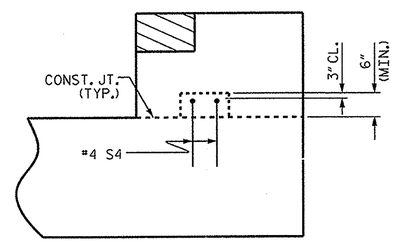

ELEVATION

LATERAL GUIDE DETAILS

(RIGHT LATERAL GUIDE SHOWN, LEFT END SIMILAR)

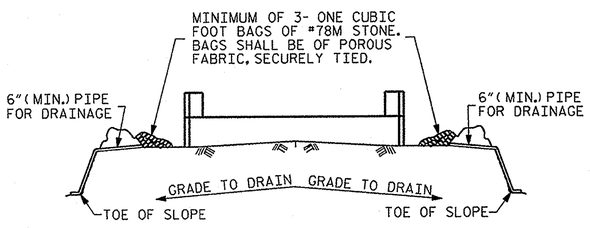

BAGGED STONE AND PIPE SHALL BE PLACED IMMEDIATELY AFTER COMPLETION OF END BENT EXCAVATION. PIPE MAY BE EITHER CONCRETE, CORRUGATED STEEL, CORRUGATED ALUMINUM ALLOY, OR CORRUGATED PLASTIC. PERFORATED PIPE WILL NOT BE ALLOWED.

BAGGED STONE SHALL REMAIN IN PLACE UNTIL THE ENGINEER DIRECTS THAT IT BE REMOVED. THE CONTRACTOR SHALL REMOVE AND DISPOSE OF SILT ACCUMULATIONS AT BAGGED STONE WHEN SO DIRECTED BY THE ENGINEER. BAGS SHALL BE REMOVED AND REPLACED WHENEVER THE ENGINEER DETERMINES THAT THEY HAVE DETERIORATED AND LOST THEIR EFFECTIVENESS.

NO SEPARATE PAYMENT WILL BE MADE FOR THIS WORK AND THE ENTIRE COST OF THIS WORK SHALL BE INCLUDED IN THE UNIT CONTRACT PRICE BID FOR THE SEVERAL PAY ITEMS.

TEMPORARY DRAINAGE AT END BENT

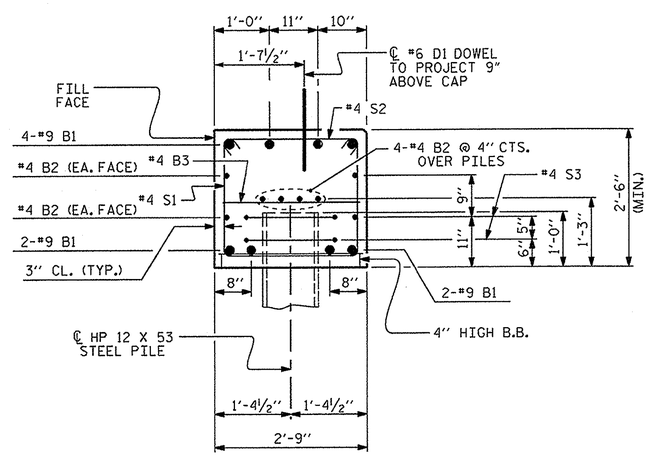

SECTION A-A

(CONCRETE COLLAR NOT SHOWN FOR CLARITY. SEE "CORROSION PROTECTION FOR STEEL PILES DETAIL.")

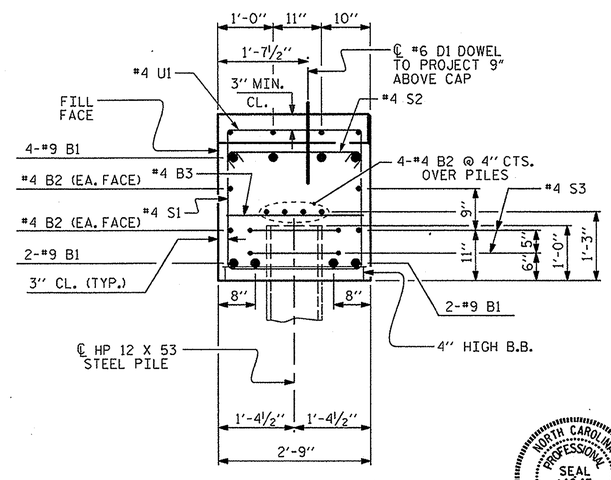

SECTION B-B

(CONCRETE COLLAR NOT SHOWN FOR CLARITY. SEE "CORROSION PROTECTION FOR STEEL PILES DETAIL.")

BAR TYPES

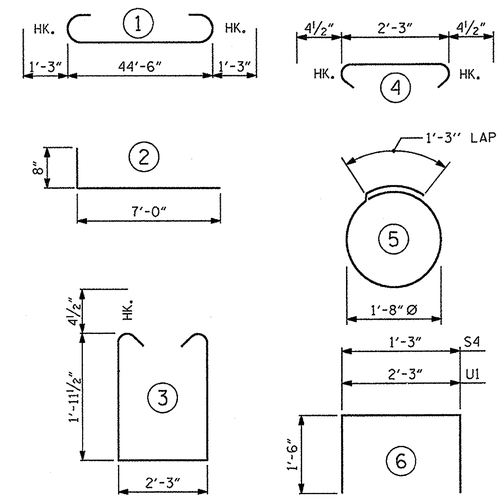

ALL BAR DIMENSIONS ARE OUT TO OUT.

END BENT No. 1 HP 12 X 53 STEEL PILES NO: 7 LIN. FT.= 490	
PILE REDRIVES EA. 3	

BILL OF MATERIAL

END BENT No. 1

BAR	NO.	SIZE	TYPE	LENGTH	WEIGHT
B1	8	#9	1	47'-0"	1278
B2	16	#4	STR	23'-6"	251
B3	12	#4	STR	2'-3"	18
B4	4	#4	STR	19'-9"	53
D1	26	#6	STR	1'-6"	59
H1	24	#4	2	7'-8"	123
K1	6	#4	STR	3'-7"	14
K2	6	#4	STR	3'-1"	12
S1	56	#4	3	6'-11"	259
S2	56	#4	4	3'-0"	112
S3	14	#4	5	6'-6"	61
S4	4	#4	6	4'-3"	11
U1	14	#4	6	5'-3"	49
V1	24	#4	STR	5'-0"	80
V2	24	#4	STR	5'-1"	81

EPOXY COATED REINFORCING STEEL 2461 LBS.

CLASS AA CONCRETE BREAKDOWN

POUR #1	CAP, LOWER PART OF WINGS & COLLARS	15.5 C.Y.
POUR #2	UPPER PART OF WINGS	2.4 C.Y.
POUR #3	LATERAL GUIDES	0.1 C.Y.
TOTAL CLASS AA CONCRETE		18.0 C.Y.

PROJECT NO. 17BP.1.R.36

CHOWAN COUNTY

STATION: 12+29.50 -L-

SHEET 3 OF 3

STATE OF NORTH CAROLINA
DEPARTMENT OF TRANSPORTATION
RALEIGH

SUBSTRUCTURE

END BENT No. 1 DETAILS

REVISIONS						SHEET NO.
NO.	BY:	DATE:	NO.	BY:	DATE:	24
1			3		*	TOTAL SHEETS
2			4			36

NORTH CAROLINA PROFESSIONAL SEAL 14045 ENGINEER TIMOTHY L. COGGINS
11/22/13

DRAWN BY :	N. Ruffin	DATE :	9/6/13
CHECKED BY :	T.L. COGGINS	DATE :	11/15/13
DESIGN ENGINEER OF RECORD:	N.M. RUFFIN	DATE :	11/21/13

22-NOV-2013 15:49
S:\DPG1\Tlm\Division 1 LIBR\17BP.1.R.36\nruffin\17BP1R36_sm_Design2_01.dgn
nruffin

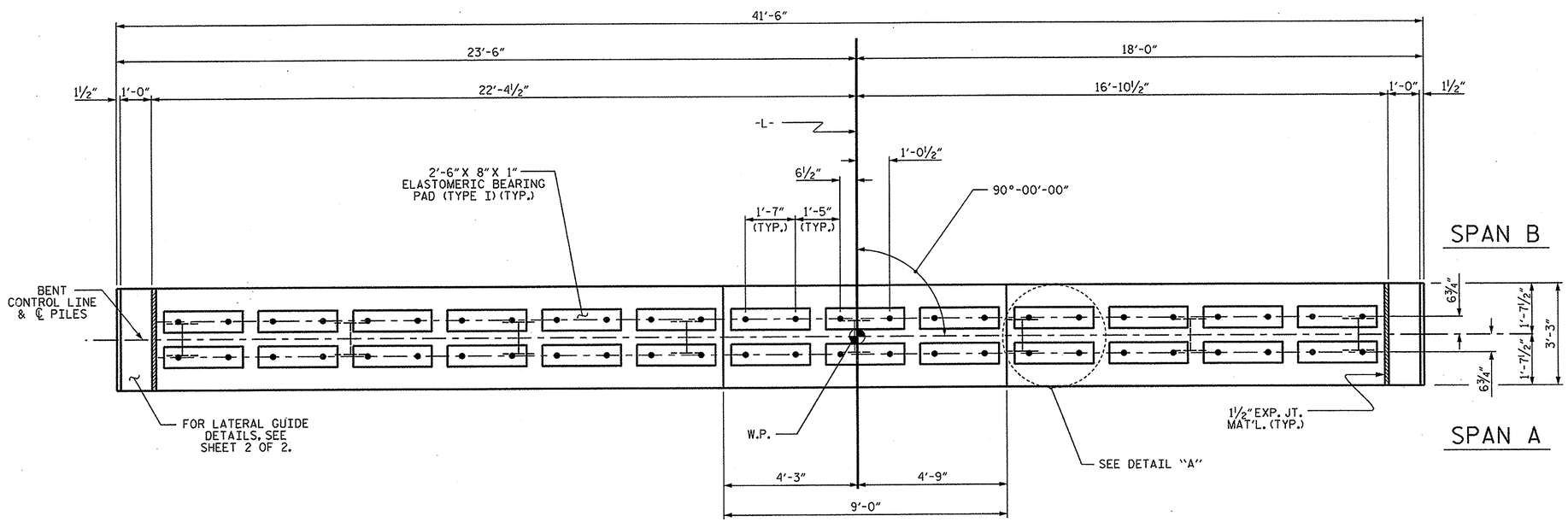

PLAN

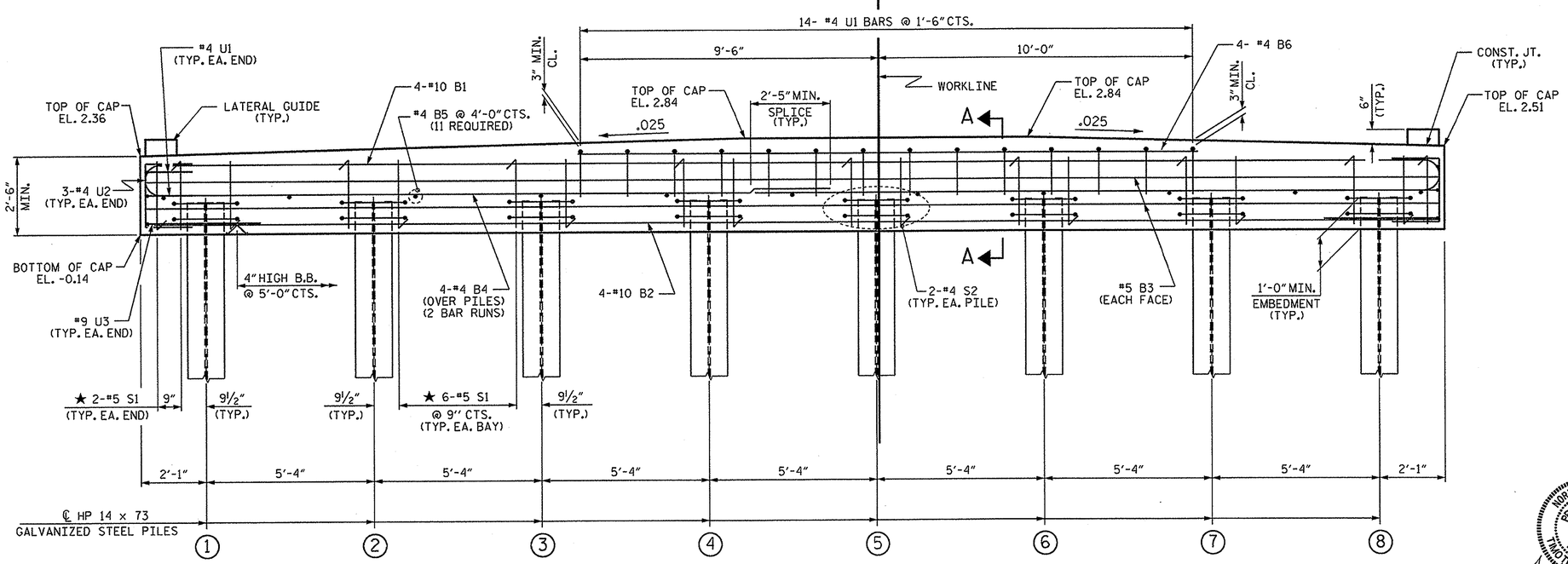

ELEVATION

FOR SECTION A-A, SEE SHEET 2 OF 2

NOTES

STIRRUPS IN CAP MAY BE SHIFTED AS NECESSARY TO CLEAR DOWELS.

THE LATERAL GUIDES ARE NOT TO BE POURED UNTIL AFTER THE CORED SLAB UNITS ARE IN PLACE.

★ INVERT ALTERNATE STIRRUPS.

GALVANIZE THE TOP OF EACH INTERIOR BENT PILE A MINIMUM OF 25 FEET. GALVANIZE IN ACCORDANCE WITH SECTION 1076 OF THE STANDARD SPECIFICATIONS.

THE CONTRACTOR HAS THE OPTION TO OMIT THE LATERAL GUIDE IF APPROVED BY THE ENGINEER.

THE CONCRETE IN THE BENT CAP OF INTERIOR BENT NO. 1 SHALL CONTAIN SILICA FUME. SILCA FUME SHALL BE SUBSTITUTED FOR 5% OF THE PORTLAND CEMENT BY WEIGHT. IF THE OPTION OF ARTICLE 1024-1 OF THE STANDARD SPECIFICATIONS TO PARTIALLY SUBSTITUTE CLASS F FLY ASH FOR PORTLAND CEMENT IS EXERCISED, THEN THE RATE OF FLY ASH SUBSTITUTION SHALL BE REDUCED TO 1.0 LB OF FLY ASH PER 1.0 LB. NO PAYMENT WILL BE MADE FOR THIS SUBSTITUTION AS IT IS CONSIDERED INCIDENTAL TO THE VARIOUS PAY ITEMS.

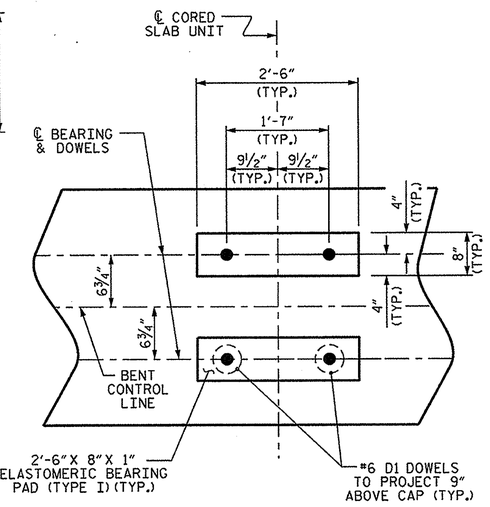

DETAIL "A"

(DIMENSIONS ARE TYPICAL EACH BEARING)

PROJECT NO. 17BP.1.R.36

CHOWAN COUNTY

STATION: 12+29.50 -L-

SHEET 1 OF 2

STATE OF NORTH CAROLINA
DEPARTMENT OF TRANSPORTATION
RALEIGH

SUBSTRUCTURE

BENT No. 1

NORTH CAROLINA PROFESSIONAL SEAL 14045 ENGINEER TIMOTHY L. COGGINS

12/23/13

REVISIONS								SHEET NO.
NO.	BY:	DATE:	NO.	BY:	DATE:			25
1			3					TOTAL SHEETS
2			4					36

DRAWN BY :	N. Ruffin	DATE :	11/4/13
CHECKED BY :	T.L. COGGINS	DATE :	11/20/13
DESIGN ENGINEER OF RECORD:	N.M. RUFFIN	DATE :	11/21/13

23-DEC-2013 11:41
S:\DPG1\Tim\Division 1 LIBR\17BP.1.R.36\nruffin\17BP1R36_sm_Design2_01.dgn
tcoggins

NCBDS

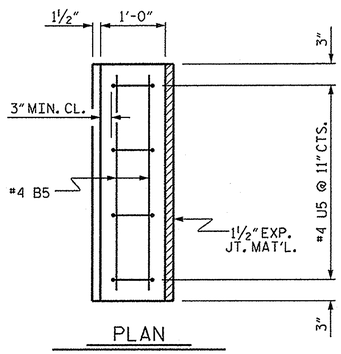

PLAN

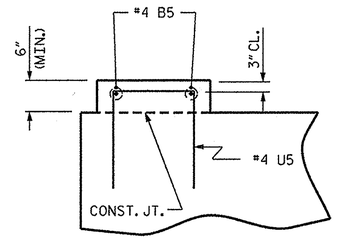

ELEVATION

LATERAL GUIDE DETAILS

(LEFT LATERAL GUIDE SHOWN, RIGHT SIDE SIMILAR)

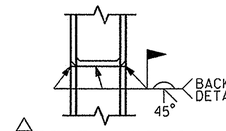

△ PILE VERTICAL

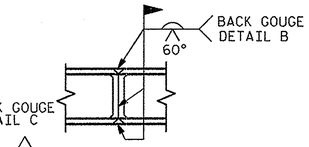

△ PILE HORIZONTAL OR VERTICAL

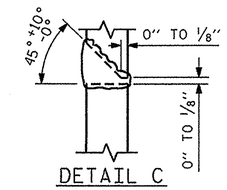

DETAIL C

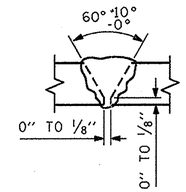

DETAIL B

△ POSITION OF PILE DURING WELDING.

PILE SPLICE DETAILS

BAR TYPES

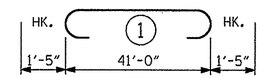

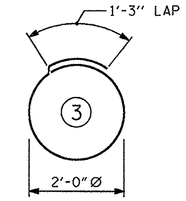

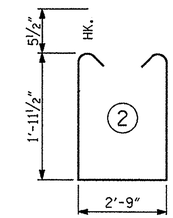

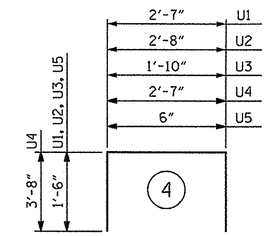

ALL BAR DIMENSIONS ARE OUT TO OUT.

BILL OF MATERIAL

FOR ONE BENT

BAR	NO.	SIZE	TYPE	LENGTH	WEIGHT
B1	4	#10	1	43'-10"	754
B2	4	#10	STR	41'-0"	706
B3	4	#5	STR	41'-0"	171
B4	8	#4	STR	21'-8"	116
B5	15	#4	STR	2'-9"	28
B6	4	#4	STR	19'-9"	53
D1	52	#6	STR	1'-6"	117
S1	46	#5	2	7'-7"	364
S2	16	#4	3	7'-7"	81
U1	14	#4	4	5'-7"	52
U2	4	#4	4	5'-8"	15
U3	6	#4	4	4'-10"	19
U4	2	#9	4	9'-11"	67
U5	8	#4	4	3'-6"	19

EPOXY COATED REINFORCING STEEL (FOR ONE BENT) 2562 LBS

CLASS AA CONCRETE BREAKDOWN (FOR ONE BENT)

POUR #1 (CAP) 14.1 C.Y.

POUR #2 (LATERAL GUIDES) 0.1 C.Y.

TOTAL CLASS AA CONCRETE 14.2 C.Y.

HP 14 X 73 GALVANIZED STEEL PILES (FOR ONE BENT)

No. 8 LIN. FT. 680

PILE REDRIVES EA. 3

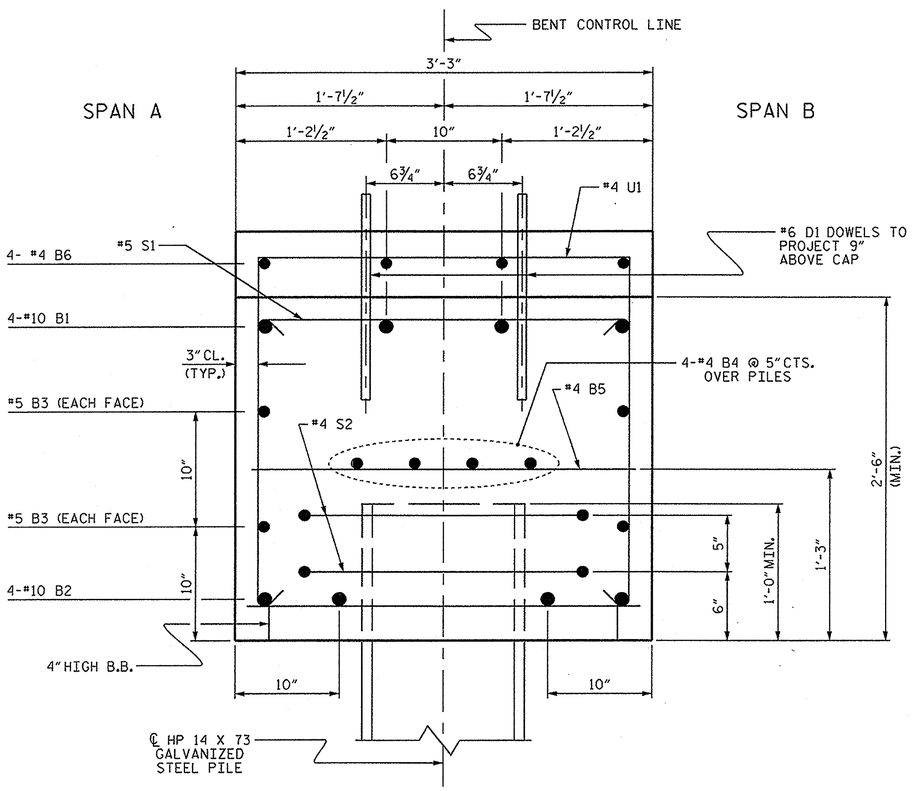

SECTION A-A

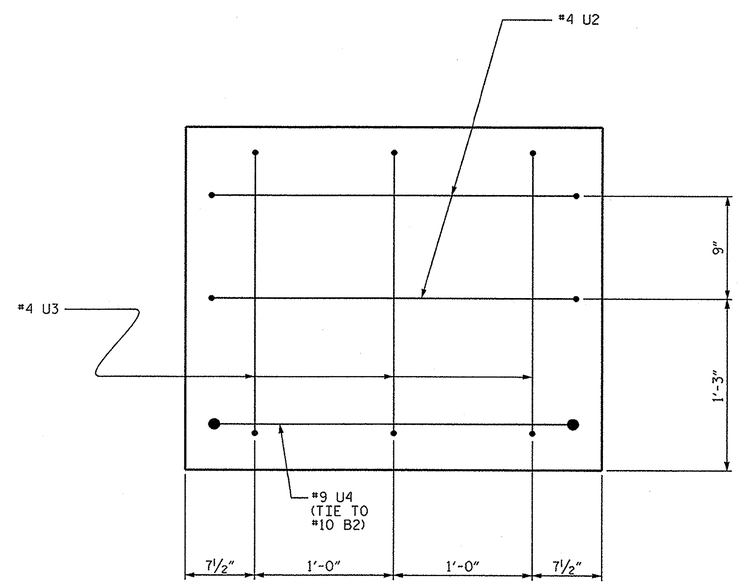

END OF CAP VIEW

(TYPICAL BOTH ENDS)

NORTH CAROLINA PROFESSIONAL SEAL 14045 ENGINEER TIMOTHY L. COGGINS
11/22/13

PROJECT NO. 17BP.1.R.36

CHOWAN COUNTY

STATION: 12+29.50 -L-

SHEET 2 OF 2

STATE OF NORTH CAROLINA
DEPARTMENT OF TRANSPORTATION
RALEIGH

SUBSTRUCTURE

BENT No. 1

REVISIONS								SHEET NO.
NO.	BY:	DATE:	NO.	BY:	DATE:			26
1			3					TOTAL SHEETS
2			4					36

DRAWN BY : N. Ruffin DATE : 11/4/13

CHECKED BY : T.L. COGGINS DATE : 11/20/13

DESIGN ENGINEER OF RECORD: N. RUFFIN DATE : 11/21/13

22-NOV-2013 15:49
S:\DPGI\Tim\Division 1 LIBR\17BP.1.R.36\nruffin\17BP1R36_sm_Design2_01.dgn
nruffin

NCDOS

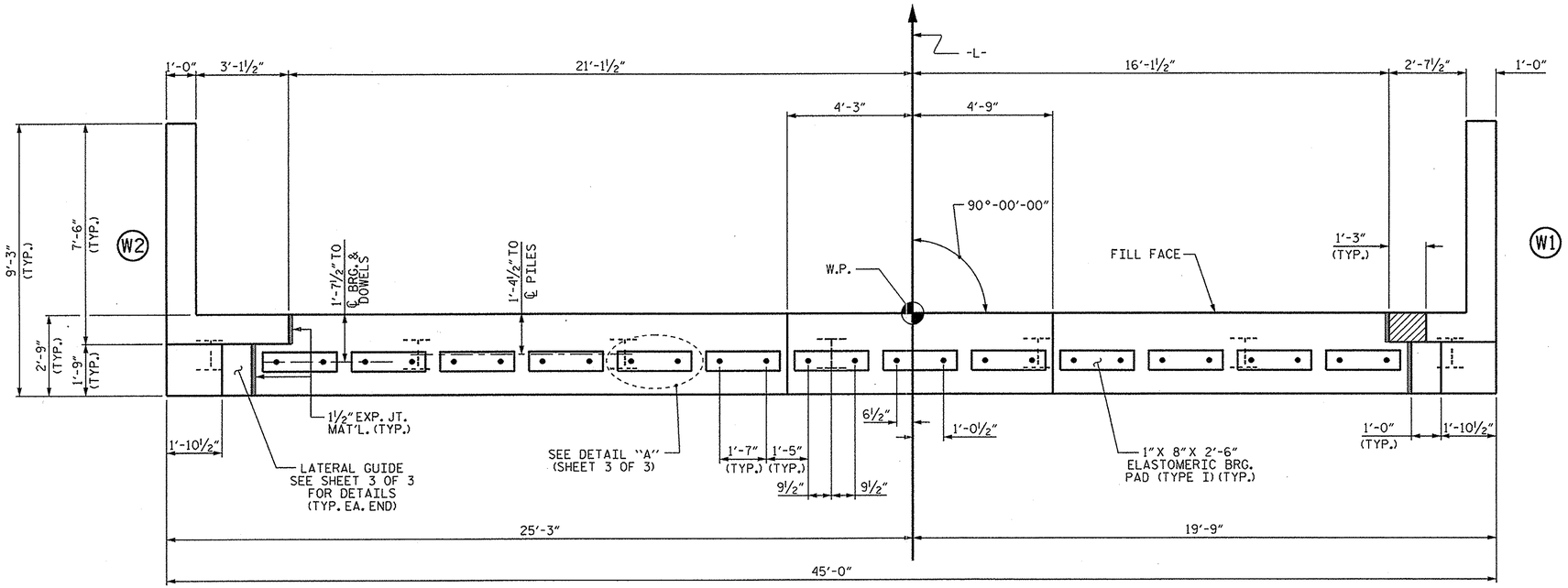

PLAN

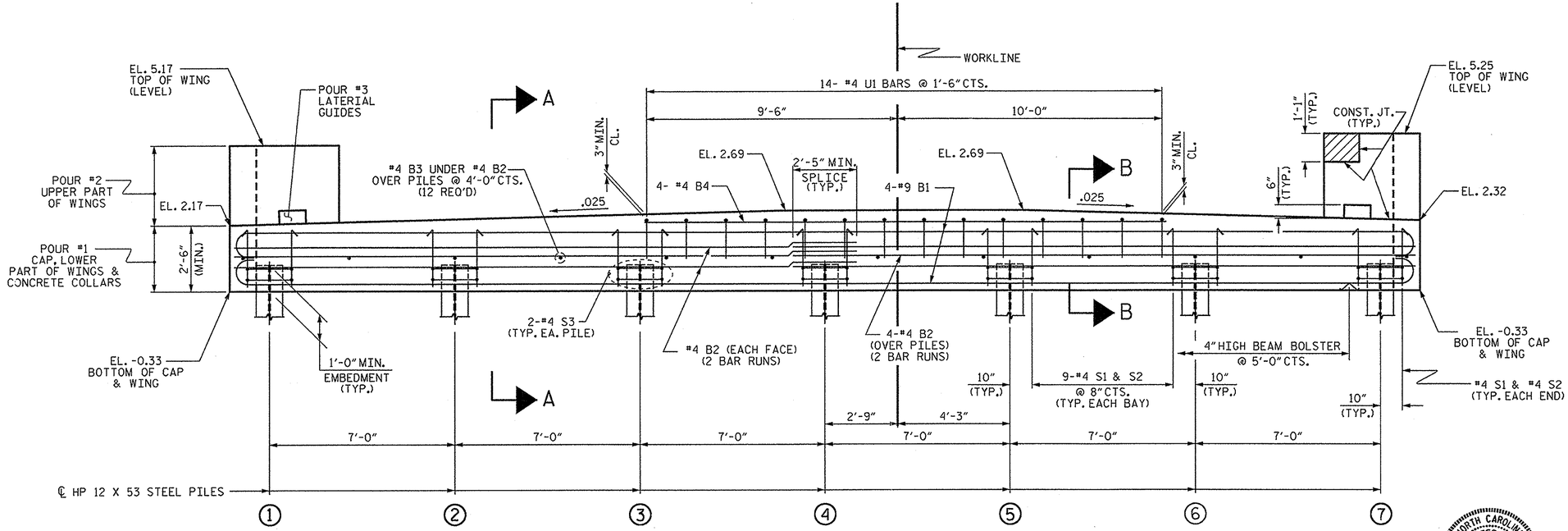

ELEVATION

FOR SECTION A-A AND SECTION B-B, SEE SHEET 3 OF 3.
CONCRETE COLLARS FOR STEEL PILES NOT SHOWN IN PLAN AND ELEVATION VIEWS FOR CLARITY.
SEE "CORROSION PROTECTION FOR STEEL PILES DETAIL", SHEET 3 OF 3.

NOTES

STIRRUPS IN CAP MAY BE SHIFTED AS NECESSARY TO CLEAR DOWELS.

THE LATERAL GUIDES ARE NOT TO BE POURED UNTIL AFTER THE CORED SLAB UNITS ARE IN PLACE.

THE CONCRETE IN THE SHADED AREA OF THE WING SHALL BE POURED AFTER THE CONCRETE PARAPET IS CAST IF SLIP FORMING IS USED.

FOR PILE SPLICE DETAILS, SEE SHEET 3 OF 3.

FOR WING DETAILS, SEE SHEET 2 OF 3.

THE CONTRACTOR HAS THE OPTION TO OMIT THE LATERAL GUIDE IF APPROVED BY THE ENGINEER.

INSTALL THE 4" DIA. DRAIN PIPE THROUGH THE WING WALL AS REQUIRED FOR REINFORCED BRIDGE APPROACH FILLS. SEE THE ROADWAY PLANS. REINFORCING STEEL IN THE WING WALL MAY BE SHIFTED AS NECESSARY TO CLEAR THE DRAIN PIPE.

THE CONCRETE IN THE END BENT CAP OF END BENT NO. 2 SHALL CONTAIN SILICA FUME. SILICA FUME SHALL BE SUBSTITUTED FOR 5% OF THE PORTLAND CEMENT BY WEIGHT. IF THE OPTION OF ARTICLE 1024-1 OF THE STANDARD SPECIFICATIONS TO PARTIALLY SUBSTITUTE CLASS F FLY ASH FOR PORTLAND CEMENT IS EXERCISED, THEN THE RATE OF FLY ASH SUBSTITUTION SHALL BE REDUCED TO 1.0 LB OF FLY ASH PER 1.0 LB. NO PAYMENT WILL BE MADE FOR THIS SUBSTITUTION AS IT IS CONSIDERED INCIDENTAL TO THE VARIOUS PAY ITEMS.

NORTH CAROLINA PROFESSIONAL SEAL 14045 ENGINEER TIMOTHY L. COGGINS
11/22/13

PROJECT NO. 17BP.1.R.36
CHOWAN COUNTY
STATION: 12+29.50 -L-

SHEET 1 OF 3

STATE OF NORTH CAROLINA
DEPARTMENT OF TRANSPORTATION
RALEIGH

SUBSTRUCTURE

END BENT No. 2

REVISIONS						SHEET NO.
NO.	BY:	DATE:	NO.	BY:	DATE:	27
1			3			TOTAL SHEETS
2			4			36

DRAWN BY : N. Ruffin DATE : 9/12/13
CHECKED BY : T.L. COGGINS DATE : 11/20/13
DESIGN ENGINEER OF RECORD: N.M. RUFFIN DATE : 11/21/13

22-NOV-2013 16:11
S:\DPG1\Tim\Division 1 LIBR\17BP.1.R.36\nruffin\17BP1R36_sm_Design2_01.dgn
tcoggins

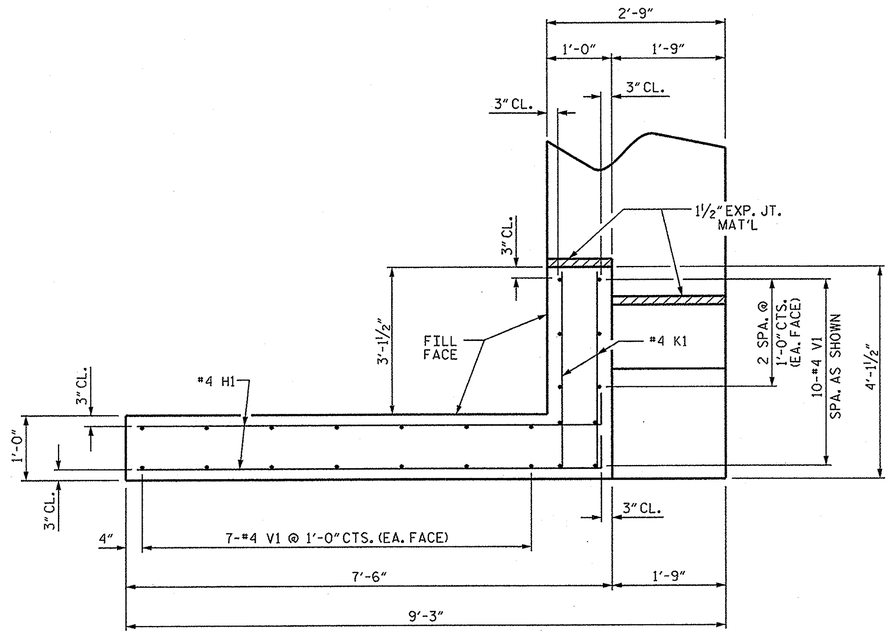

PLAN OF WING (W2)

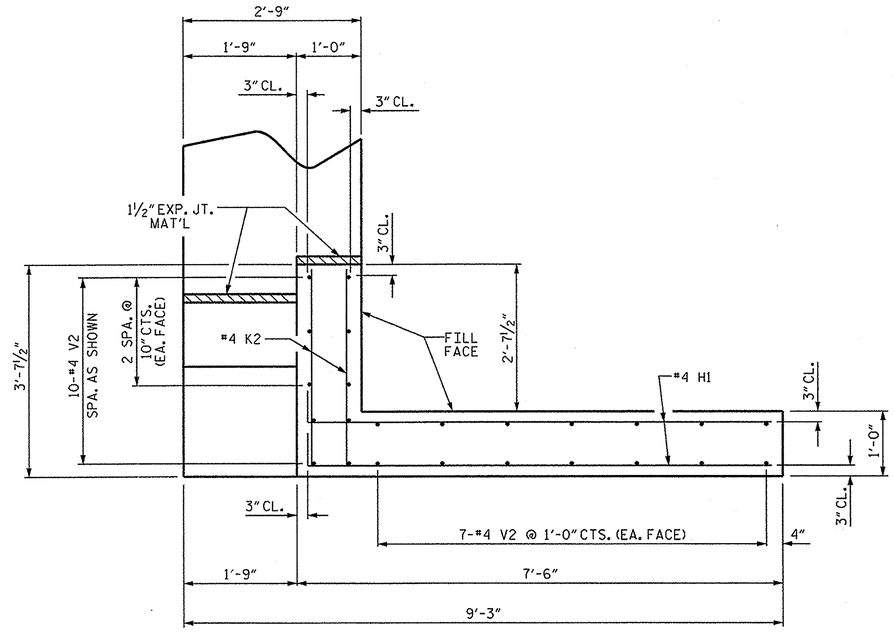

PLAN OF WING (W1)

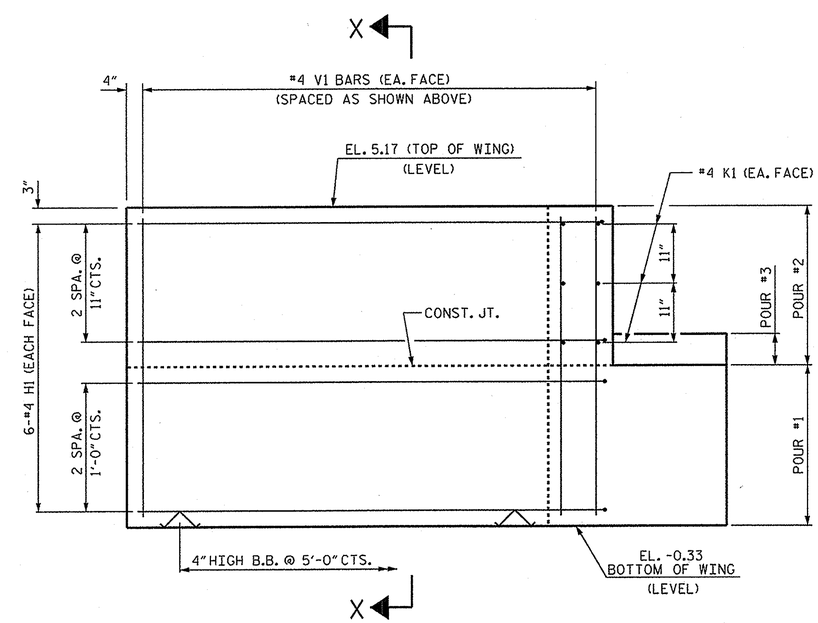

ELEVATION OF WING (W2)

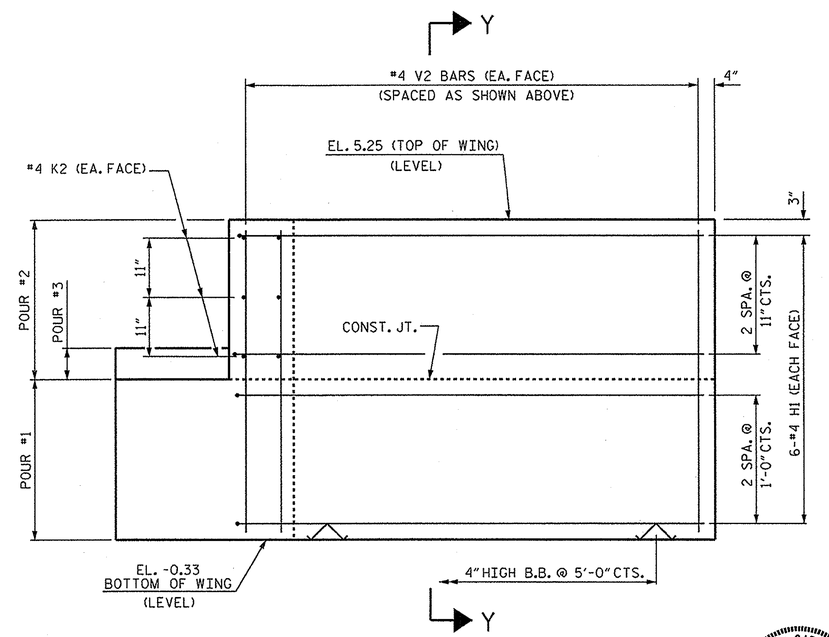

ELEVATION OF WING (W1)

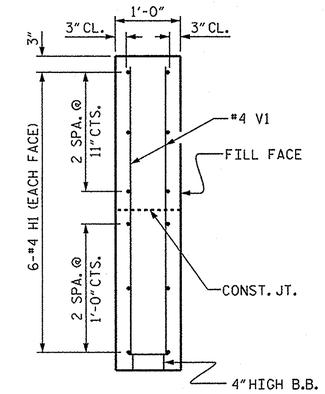

SECTION X-X

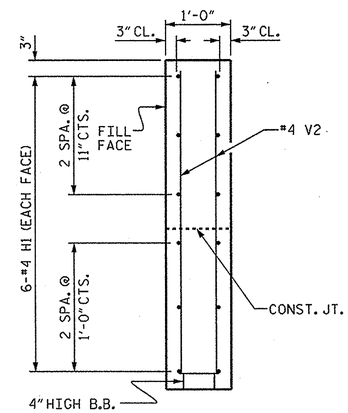

SECTION Y-Y

PROJECT NO. 17BP.1.R.36

CHOWAN COUNTY

STATION: 12+29.50 -L-

SHEET 2 OF 3

STATE OF NORTH CAROLINA
DEPARTMENT OF TRANSPORTATION
RALEIGH

SUBSTRUCTURE

END BENT No. 2
WING DETAILS

NORTH CAROLINA PROFESSIONAL SEAL 14045 ENGINEER TIMOTHY L. COGGINS
11/22/13

WING DETAILS

DRAWN BY : N. Ruffin	DATE : 9/12/13		
CHECKED BY : T.L. COGGINS	DATE : 11/20/13		
DESIGN ENGINEER OF RECORD: N. RUFFIN	DATE : 11/21/13		

REVISIONS								SHEET NO.
NO.	BY:	DATE:	NO.	BY:	DATE:			28
1			3					TOTAL SHEETS
2			4					36

22-NOV-2013 15:49
S:\DPG\TIM\Division 1 LIBR\17BP.1.R.36\nruffin\17BP1R36_sm_Design2_01.dgn
nruffin

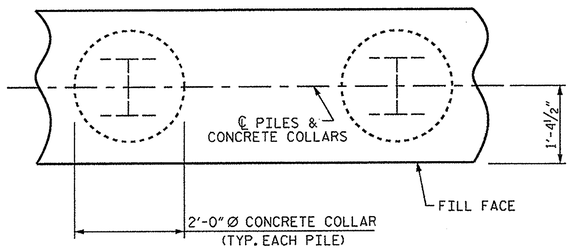

PLAN

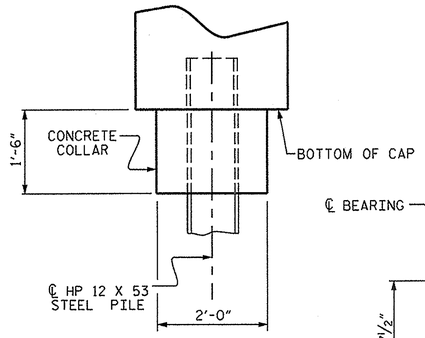

ELEVATION

CORROSION PROTECTION FOR STEEL PILES DETAIL

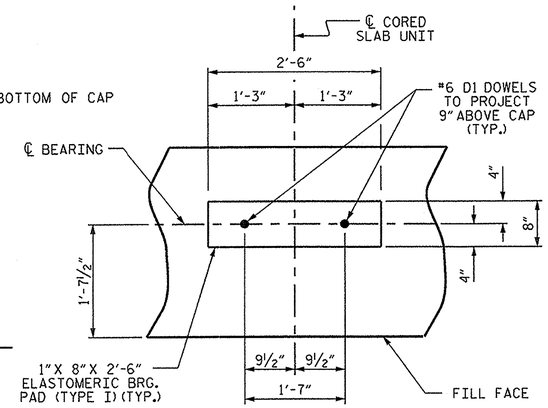

DETAIL "A"

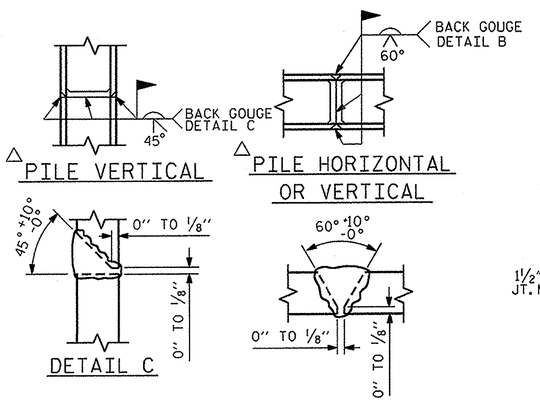

△ PILE VERTICAL

△ PILE HORIZONTAL OR VERTICAL

DETAIL C

DETAIL B

△ POSITION OF PILE DURING WELDING.

PILE SPLICE DETAILS

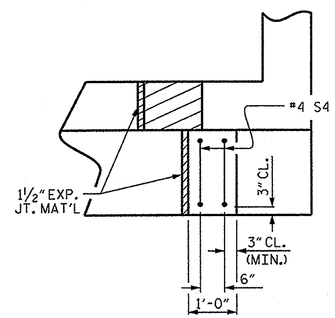

PLAN

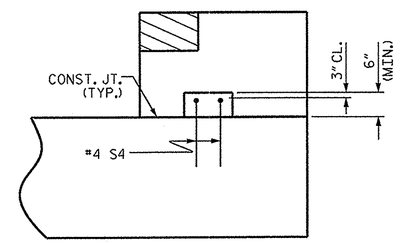

ELEVATION

LATERAL GUIDE DETAILS

(RIGHT LATERAL GUIDE SHOWN, LEFT END SIMILAR)

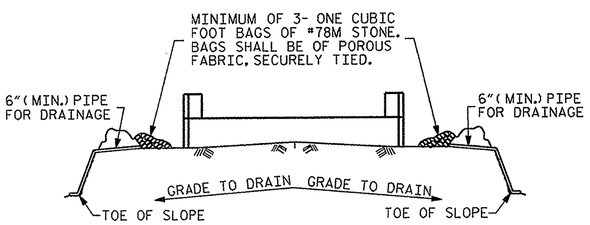

BAGGED STONE AND PIPE SHALL BE PLACED IMMEDIATELY AFTER COMPLETION OF END BENT EXCAVATION. PIPE MAY BE EITHER CONCRETE, CORRUGATED STEEL, CORRUGATED ALUMINUM ALLOY, OR CORRUGATED PLASTIC. PERFORATED PIPE WILL NOT BE ALLOWED.

BAGGED STONE SHALL REMAIN IN PLACE UNTIL THE ENGINEER DIRECTS THAT IT BE REMOVED. THE CONTRACTOR SHALL REMOVE AND DISPOSE OF SILT ACCUMULATIONS AT BAGGED STONE WHEN SO DIRECTED BY THE ENGINEER. BAGS SHALL BE REMOVED AND REPLACED WHENEVER THE ENGINEER DETERMINES THAT THEY HAVE DETERIORATED AND LOST THEIR EFFECTIVENESS.

NO SEPARATE PAYMENT WILL BE MADE FOR THIS WORK AND THE ENTIRE COST OF THIS WORK SHALL BE INCLUDED IN THE UNIT CONTRACT PRICE BID FOR THE SEVERAL PAY ITEMS.

TEMPORARY DRAINAGE AT END BENT

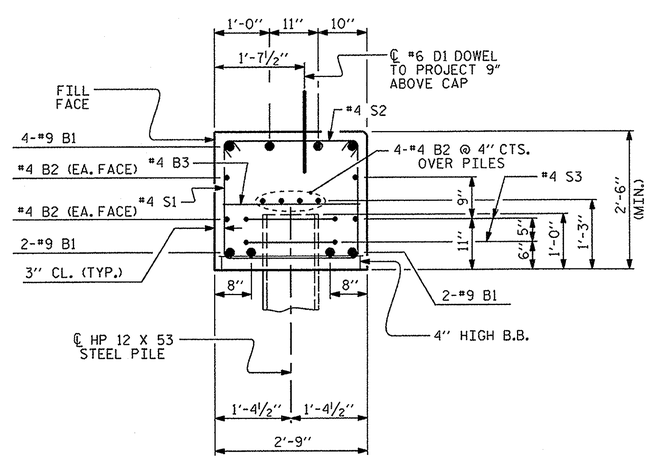

SECTION A-A

(CONCRETE COLLAR NOT SHOWN FOR CLARITY. SEE "CORROSION PROTECTION FOR STEEL PILES DETAIL.")

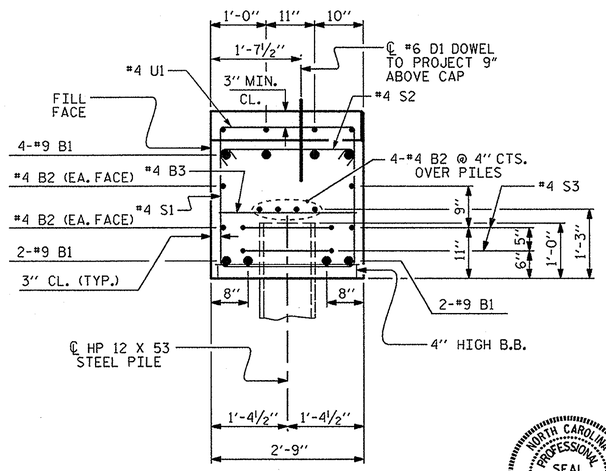

SECTION B-B

(CONCRETE COLLAR NOT SHOWN FOR CLARITY. SEE "CORROSION PROTECTION FOR STEEL PILES DETAIL.")

BAR TYPES

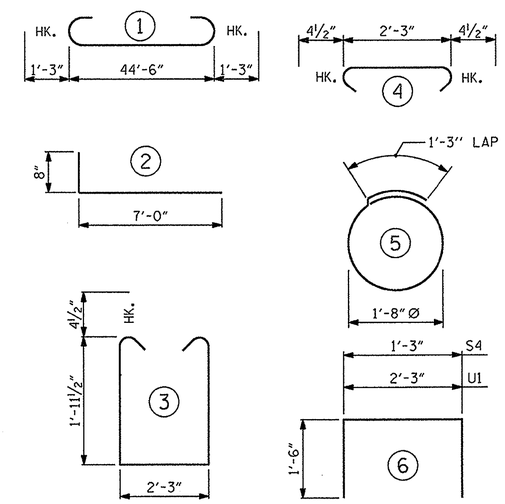

ALL BAR DIMENSIONS ARE OUT TO OUT.

END BENT No. 2
HP 12 X 53 STEEL PILES
NO: 7 LIN. FT.= 560

PILE REDRIVES EA. 3

BILL OF MATERIAL
END BENT No. 2

BAR	NO.	SIZE	TYPE	LENGTH	WEIGHT
B1	8	#9	1	47'-0"	1278
B2	16	#4	STR	23'-6"	251
B3	12	#4	STR	2'-3"	18
B4	4	#4	STR	19'-9"	53
D1	26	#6	STR	1'-6"	59
H1	24	#4	2	7'-8"	123
K1	6	#4	STR	3'-7"	14
K2	6	#4	STR	3'-1"	12
S1	56	#4	3	6'-11"	259
S2	56	#4	4	3'-0"	112
S3	14	#4	5	6'-6"	61
S4	4	#4	6	4'-3"	11
U1	14	#4	6	5'-3"	49
V1	24	#4	STR	5'-0"	80
V2	24	#4	STR	5'-1"	81
EPOXY COATED REINFORCING STEEL					2461 LBS.

CLASS AA CONCRETE BREAKDOWN

POUR #1	CAP, LOWER PART OF WINGS & COLLARS	15.5 C.Y.
POUR #2	UPPER PART OF WINGS	2.4 C.Y.
POUR #3	LATERAL GUIDES	0.1 C.Y.
TOTAL CLASS AA CONCRETE		18.0 C.Y.

PROJECT NO. 17BP.1.R.36
CHOWAN COUNTY
STATION: 12+29.50 -L-

SHEET 3 OF 3

STATE OF NORTH CAROLINA
DEPARTMENT OF TRANSPORTATION
RALEIGH

SUBSTRUCTURE

END BENT No. 2 DETAILS

NORTH CAROLINA PROFESSIONAL SEAL 14045 ENGINEER TIMOTHY L. COGGINS
11/21/13

REVISIONS						SHEET NO.
NO.	BY:	DATE:	NO.	BY:	DATE:	29
1			3			TOTAL SHEETS
2			4			36

DRAWN BY : N. Ruffin DATE : 9/12/13
CHECKED BY : T.L. COGGINS DATE : 11/20/13
DESIGN ENGINEER OF RECORD: N. RUFFIN DATE : 11/21/13

22-NOV-2013 15:49
S:\DPGI\Tim\Division 1 LIBR\17BP.1.R.36\nruffin\17BP1R36_sm_Design2_01.dgn
nruffin

NOTES :

FOR BERM WIDTH DIMENSIONS, SEE GENERAL DRAWING.

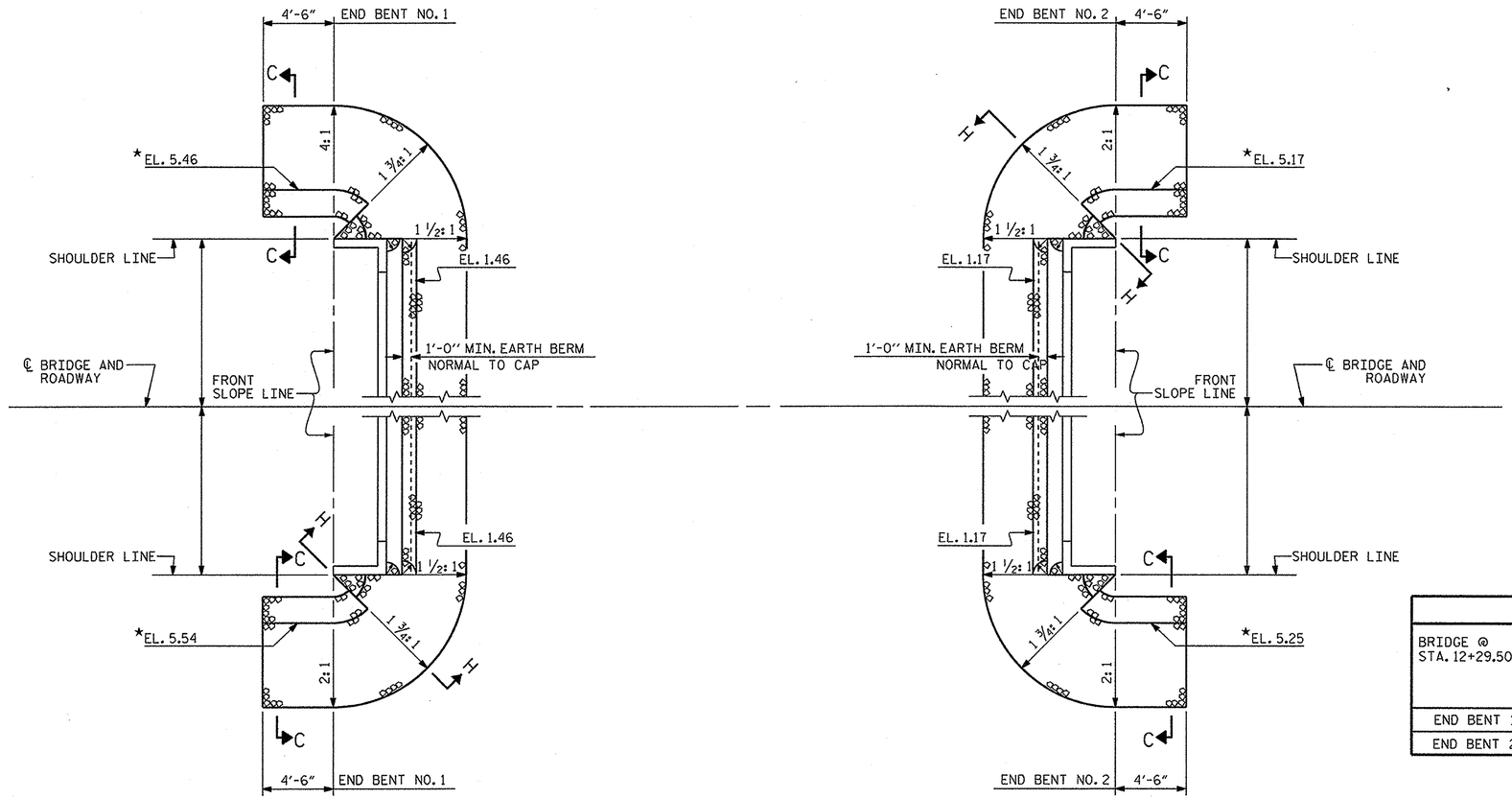

PLAN

ESTIMATED QUANTITIES		
BRIDGE @ STA. 12+29.50 -L-	RIP RAP CLASS II (2'-0" THICK)	GEOTEXTILE FOR DRAINAGE
	TONS	SQUARE YARDS
END BENT 1	110	120
END BENT 2	85	91

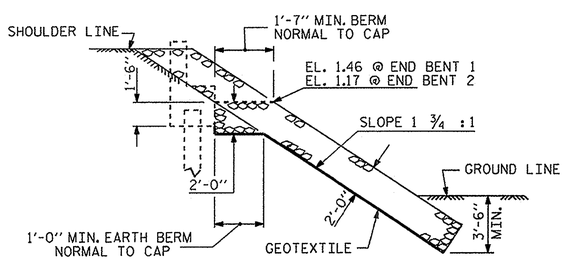

SECTION H-H

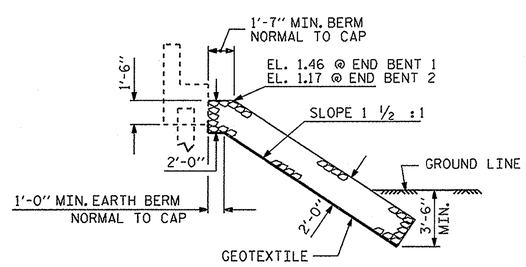

℄ SECTION

BERM RIP RAPPED

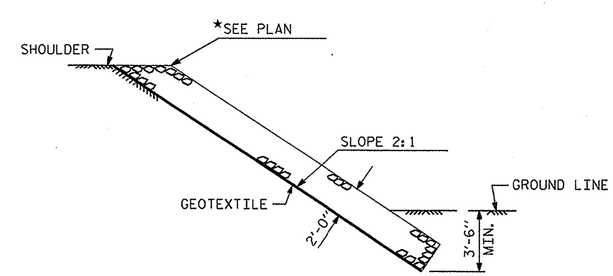

SECTION C-C

PROJECT NO. 17BP.1.R.36

CHOWAN COUNTY

STATION: 12+29.50 -L-

STATE OF NORTH CAROLINA
DEPARTMENT OF TRANSPORTATION
RALEIGH

STANDARD

RIP RAP DETAILS

NORTH CAROLINA PROFESSIONAL SEAL 14045 ENGINEER TIMOTHY L. COGGINS
11/22/13

REVISIONS							SHEET NO.
NO.	BY:	DATE:	NO.	BY:	DATE:		30
1			3				TOTAL SHEETS
2			4				36

DRAWN BY : N. Ruffin DATE : 11/6/13
CHECKED BY : T.L. COGGINS DATE : 11/20/13
DESIGN ENGINEER OF RECORD: N.M. RUFFIN DATE : 11/21/13

22-NOV-2013 15:49
S:\DPG1\Tlm\Division 1 LIBR\17BP.1.R.36\nruffin\17BP1R36_sm_Design2_01.dgn
nruffin

STD. NO. RR1

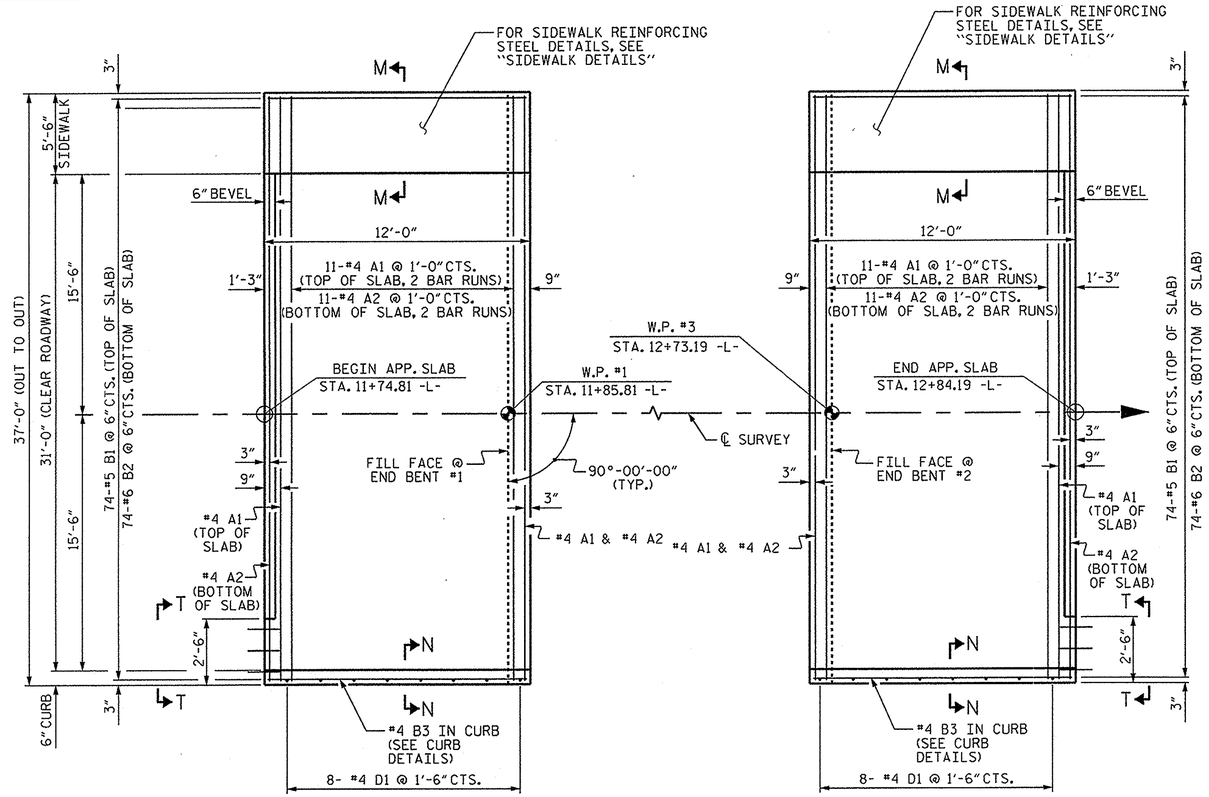

PLAN @ END BENT #1

PLAN @ END BENT #2

DIMENSIONS SHOWN ARE TYPICAL FOR BOTH APPROACH SLABS

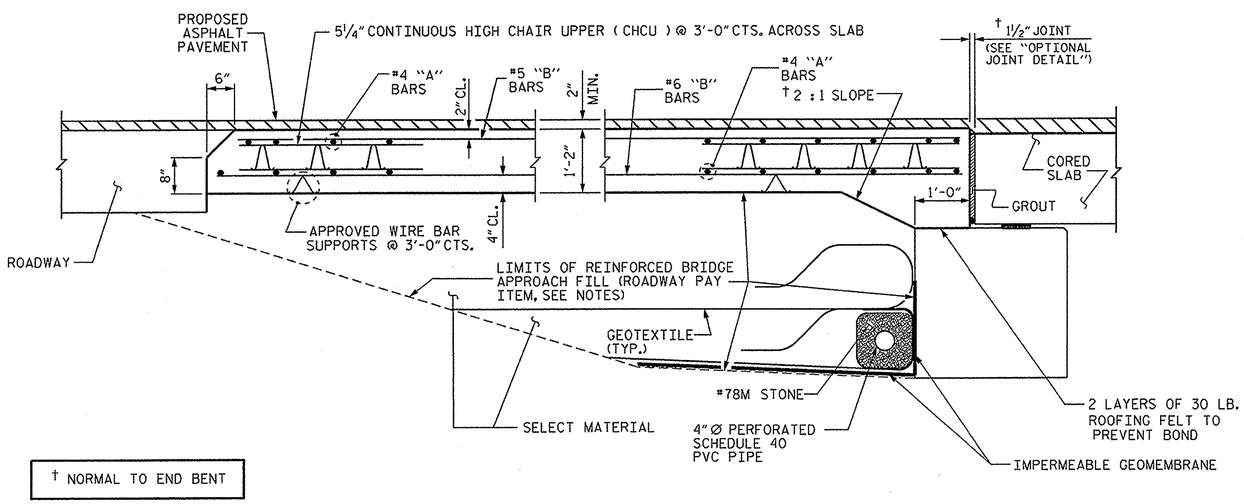

† NORMAL TO END BENT

SECTION THRU SLAB

NOTES

FOR REINFORCED BRIDGE APPROACH FILL INCLUDING GEOTEXTILE, IMPERMEABLE GEOMEMBRANE, 4" Ø DRAINAGE PIPE, #78M STONE, AND SELECT MATERIAL, SEE ROADWAY PLANS.

AREA BETWEEN THE WINGWALL AND APPROACH SLAB SHALL BE GRADED TO DRAIN THE WATER AWAY FROM THE FILL FACE OF THE BRIDGE AND SHALL BE PAVED. SEE ROADWAY PLANS.

FOR JOINT DETAILS, SEE "PRESTRESSED CONCRETE CORED SLAB UNIT" SHEETS.

THE JOINT AT THE END BENT SHALL BE GROUTED AS SOON AS PRACTICAL AFTER THE CONSTRUCTION OF THE APPROACH SLABS.

THE CONTRACTOR HAS THE OPTION TO OMIT GROUT BETWEEN THE APPROACH SLAB AND THE CORED SLAB UNITS AND POUR THE APPROACH SLAB DIRECTLY AGAINST THE CORED SLAB UNITS. SEE "OPTIONAL JOINT DETAIL".

APPROACH SLAB GROOVING IS NOT REQUIRED.

DOWELS MAY BE PUSHED INTO GREEN CONCRETE AFTER THE SLAB HAS BEEN SCREEDED AND FLOAT FINISHED

THE APPROACH SLAB SHALL HAVE A VERTICAL FACE AT THE LOCATION OF THE PROPOSED CURB AND GUTTER.

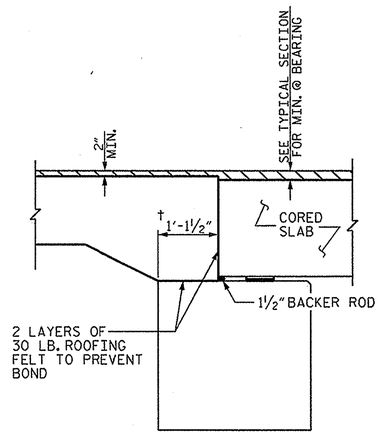

OPTIONAL JOINT DETAIL

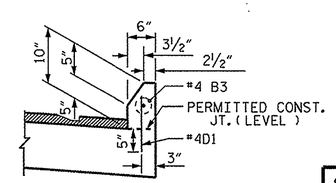

SECTION N-N

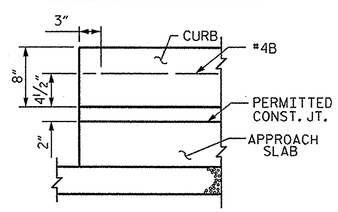

DETAIL AT END OF CURB WITH CURB & GUTTER

CURB DETAILS

BILL OF MATERIAL

FOR ONE APPROACH SLAB (2 REQ'D)

BAR	NO.	SIZE	TYPE	LENGTH	WEIGHT
* A1	26	#4	STR	19'-4"	336
A2	26	#4	STR	19'-3"	334
* B1	74	#5	STR	11'-2"	862
B2	74	#6	STR	11'-8"	1297
* B3	6	#4	STR	11'-8"	47
* D1	8	#4	STR	0'-11"	5
* D2	3	#6	STR	1'-6"	7
* G1	12	#4	STR	5'-0"	40
* U1	6	#4	1	3'-0"	12
REINFORCING STEEL				LBS.	1631
* EPOXY COATED REINFORCING STEEL				LBS.	1309

CLASS AA CONCRETE BREAKDOWN		
POUR #1	SLAB & CURB	21.4 C. Y.
POUR #2	SIDEWALK	1.7 C. Y.
TOTAL CLASS AA CONCRETE		23.1 C. Y.

BAR TYPE

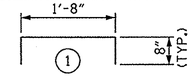

BAR DIMENSION IS OUT TO OUT.

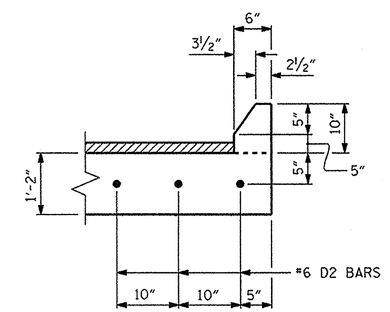

SECTION T-T

SPLICE LENGTHS		
BAR SIZE	EPOXY COATED	UNCOATED
#4	2'-0"	1'-9"
#5	2'-6"	2'-2"
#6	3'-10"	2'-7"

PROJECT NO. 17BP.1.R.36

CHOWAN COUNTY

STATION: 12+29.50 -L-

SHEET 1 OF 2

STATE OF NORTH CAROLINA
DEPARTMENT OF TRANSPORTATION
RALEIGH

STANDARD

BRIDGE APPROACH SLAB FOR PRESTRESSED CONCRETE CORED SLAB UNIT (SUB-REGIONAL TIER)

NORTH CAROLINA PROFESSIONAL SEAL 14045 ENGINEER TIMOTHY L. COGGINS 11/22/13

REVISIONS						
NO.	BY:	DATE:	NO.	BY:	DATE:	SHEET NO. 31
1			3			TOTAL SHEETS 36
2			4			

ASSEMBLED BY : N. Ruffin	DATE : 11/5/13		
CHECKED BY : T.L. COGGINS	DATE : 11/19/13		
DRAWN BY : KMM 3-08	REV. 10/1/11	MAA/GM	
CHECKED BY : GM 3-08	REV. 12/21/11	MAA/GM	
	REV. 6/13	MAA/GM	

22-NOV-2013 15:49
S:\DPG\Tlm\Division 1 LIBR\17BP.1.R.36\nruffin\17BP1R36_sm_Design2_01.dgn
nruffin

(SHT 2a) STD. NO. BAS6

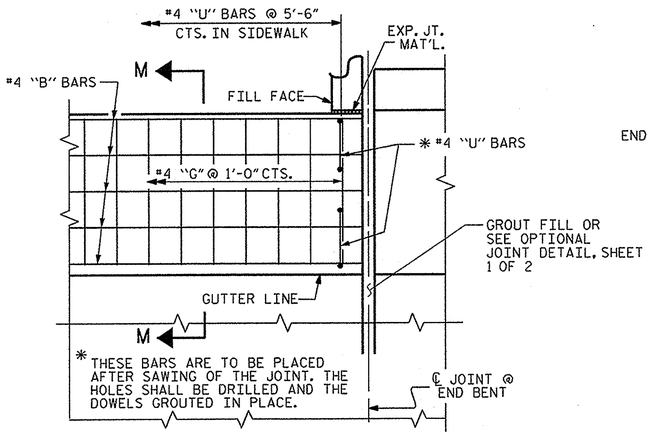

PLAN

DETAILS OF SIDEWALK ON APPROACH SLAB

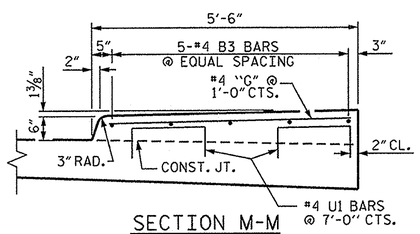

SECTION M-M

SIDEWALK DETAILS

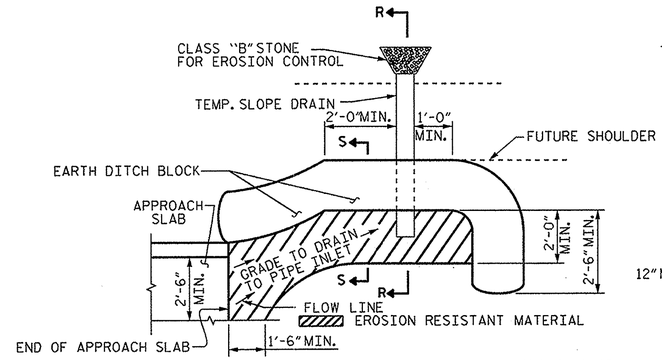

NOTE: IMMEDIATELY AFTER THE CONSTRUCTION OF THE APPROACH SLAB, THE CONTRACTOR SHALL PROVIDE TEMPORARY BERM AND SLOPE DRAIN. CONTRACTOR SHALL GRADE TO PIPE INLET AND PROVIDE EROSION RESISTANT MATERIAL AS SHOWN. THE EROSION RESISTANT MATERIAL SHALL BE EITHER 1) ASPHALT PLANT MIX, TYPE 1 OR TYPE 2, MIN. 2" DEPTH, 2) EROSION CONTROL MAT, OR 3) CONCRETE, AS DIRECTED BY THE ENGINEER. THE SLOPE DRAIN SHALL CONSIST OF A NON-PERFORATED TEMPORARY DRAINAGE PIPE, 12 INCHES IN DIAMETER.

PLAN VIEW

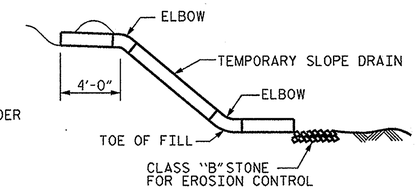

SECTION R-R

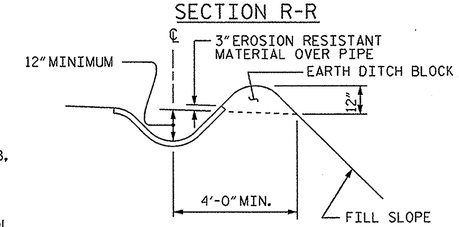

SECTION S-S

TEMPORARY BERM AND SLOPE DRAIN DETAILS

(TO BE USED WHEN SHOULDER BERM GUTTER IS REQUIRED)

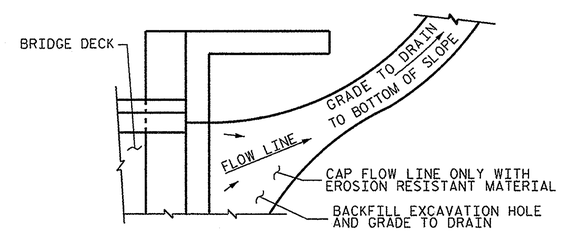

NOTE: IF THE APPROACH SLAB IS NOT CONSTRUCTED IMMEDIATELY AFTER THE BACKFILLING OF THE END BENT EXCAVATION, GRADE TO DRAIN TO THE BOTTOM OF THE SLOPE AND PROVIDE EROSION RESISTANT MATERIAL, SUCH AS FIBERGLASS ROVING OR AS DIRECTED BY THE ENGINEER TO PREVENT SOIL EROSION AND TO PROTECT THE AREA ADJACENT TO THE STRUCTURE. THE CONTRACTOR WILL BE REQUIRED TO REMOVE THESE MATERIALS PRIOR TO CONSTRUCTION OF THE APPROACH SLAB.

TEMPORARY DRAINAGE DETAIL

PROJECT NO. 17BP.1.R.36
CHOWAN COUNTY
STATION: 12+29.50 -L-

SHEET 2 OF 2

STATE OF NORTH CAROLINA
DEPARTMENT OF TRANSPORTATION
RALEIGH

STANDARD

BRIDGE APPROACH
SLAB DETAILS

NORTH CAROLINA PROFESSIONAL SEAL 14045 ENGINEER TIMOTHY L. COGGINS
11/22/13

ASSEMBLED BY : N. Ruffin	DATE : 11/5/13		
CHECKED BY : T.L. COGGINS	DATE : 11/19/13		
DRAWN BY : FCJ 11/88	REV. 10/1/11	MAA/GM	
CHECKED BY : ARB 11/88	REV. 7/12	MAA/GM	
	REV. 6/13	MAA/GM	

REVISIONS								SHEET NO.
NO.	BY:	DATE:	NO.	BY:	DATE:			32
1			3					TOTAL SHEETS
2			4					36

22-NOV-2013 15:49
S:\DPGI\Tim\Division 1 LIBR\17BP.1.R.36\nruffin\17BP1R36_sm_Design2_01.dgn
nruffin

STD. NO. BAS4 (SHT 2)

STANDARD NOTES

DESIGN DATA:

SPECIFICATIONS	A.A.S.H.T.O. (CURRENT)
LIVE LOAD	SEE PLANS
IMPACT ALLOWANCE	SEE A.A.S.H.T.O.
STRESS IN EXTREME FIBER OF	
STRUCTURAL STEEL - AASHTO M270 GRADE 36	20,000 LBS. PER SQ. IN.
- AASHTO M270 GRADE 50W	27,000 LBS. PER SQ. IN.
- AASHTO M270 GRADE 50	27,000 LBS. PER SQ. IN.
REINFORCING STEEL IN TENSION	
GRADE 60	24,000 LBS. PER SQ. IN.
CONCRETE IN COMPRESSION	1,200 LBS. PER SQ. IN.
CONCRETE IN SHEAR	SEE A.A.S.H.T.O.
STRUCTURAL TIMBER - TREATED OR	
UNTREATED - EXTREME FIBER STRESS	1,800 LBS. PER SQ. IN.
COMPRESSION PERPENDICULAR TO GRAIN OF TIMBER	375 LBS. PER SQ. IN.
EQUIVALENT FLUID PRESSURE OF EARTH	30 LBS. PER CU. FT. (MINIMUM)

MATERIAL AND WORKMANSHIP:

EXCEPT AS MAY OTHERWISE BE SPECIFIED ON PLANS OR IN THE SPECIAL PROVISIONS, ALL MATERIAL AND WORKMANSHIP SHALL BE IN ACCORDANCE WITH THE 2012 "STANDARD SPECIFICATIONS FOR ROADS AND STRUCTURES" OF THE N. C. DEPARTMENT OF TRANSPORTATION.

STEEL SHEET PILING FOR PERMANENT OR TEMPORARY APPLICATIONS SHALL BE HOT ROLLED.

CONCRETE:

UNLESS OTHERWISE REQUIRED ON PLANS, CLASS A CONCRETE SHALL BE USED FOR ALL PORTIONS OF ALL STRUCTURES WITH THE EXCEPTION THAT: CLASS AA CONCRETE SHALL BE USED IN BRIDGE SUPERSTRUCTURES, ABUTMENT BACKWALLS, AND APPROACH SLABS; AND CLASS B CONCRETE SHALL BE USED FOR SLOPE PROTECTION AND RIP RAP.

CONCRETE CHAMFERS:

UNLESS OTHERWISE NOTED ON THE PLANS, ALL EXPOSED CORNERS ON STRUCTURES SHALL BE CHAMFERED 3/4" WITH THE FOLLOWING EXCEPTIONS: TOP CORNERS OF CURBS MAY BE ROUNDED TO 1-1/2" RADIUS WHICH IS BUILT INTO CURB FORMS; CORNERS OF TRANSVERSE FLOOR EXPANSION JOINTS SHALL BE ROUNDED WITH A 1/4" FINISHING TOOL UNLESS OTHERWISE REQUIRED ON PLANS; AND CORNERS OF EXPANSION JOINTS IN THE ROADWAY FACES AND TOPS OF CURBS AND SIDEWALKS SHALL BE ROUNDED TO A 1/4" RADIUS WITH A FINISHING STONE OR TOOL UNLESS OTHERWISE REQUIRED ON PLANS.

DOWELS:

DOWELS WHEN INDICATED ON PLANS AS FOR CULVERT EXTENSIONS, SHALL BE EMBEDDED AT LEAST 12" INTO THE OLD CONCRETE AND GROUTED INTO PLACE WITH 1:2 CEMENT MORTAR.

ALLOWANCE FOR DEAD LOAD DEFLECTION, SETTLEMENT, ETC. IN CASTING SUPERSTRUCTURES:

BRIDGES SHALL BE BUILT ON THE GRADE OR VERTICAL CURVE SHOWN ON PLANS. SLABS, CURBS AND PARAPETS SHALL CONFORM TO THE GRADE OR CURVE.

ALL DIMENSIONS WHICH ARE GIVEN IN SECTION AND ARE AFFECTED BY DEAD LOAD DEFLECTIONS ARE DIMENSIONS AT CENTER LINE OF BEARING UNLESS OTHERWISE NOTED ON PLANS. IN SETTING FORMS FOR STEEL BEAM BRIDGES AND PRESTRESSED CONCRETE GIRDER BRIDGES, ADJUSTMENTS SHALL BE MADE DUE TO THE DEAD LOAD DEFLECTIONS FOR THE ELEVATIONS SHOWN. WHERE BLOCKS ARE SHOWN OVER BEAMS FOR BUILDING UP TO THE SLAB, THE VERTICAL DIMENSIONS OF THE BLOCKS SHALL BE ADJUSTED BETWEEN BEARINGS TO COMPENSATE FOR DEAD LOAD DEFLECTIONS, VERTICAL CURVE ORDINATE, AND ACTUAL BEAM CAMBER. WHERE BOTTOM OF SLAB IS IN LINE WITH BOTTOM OF TOP FLANGES, DEPTH OF SLAB BETWEEN BEARINGS SHALL BE ADJUSTED TO COMPENSATE FOR DEAD LOAD DEFLECTION, VERTICAL CURVE ORDINATE, AND ACTUAL BEAM CAMBER.

IN SETTING FALSEWORK AND FORMS FOR REINFORCED CONCRETE SPANS, AN ALLOWANCE SHALL BE MADE FOR DEAD LOAD DEFLECTIONS, SETTLEMENT OF FALSEWORK, AND PERMANENT CAMBER WHICH SHALL BE PROVIDED FOR IN ADDITION TO THE ELEVATIONS SHOWN. AFTER REMOVAL OF THE FALSEWORK, THE FINISHED STRUCTURES SHALL CONFORM TO THE PROFILE AND ELEVATIONS SHOWN ON THE PLANS AND CONSTRUCTION ELEVATIONS FURNISHED BY THE ENGINEER.

DETAILED DRAWINGS FOR FALSEWORK OR FORMS FOR BRIDGE SUPERSTRUCTURE AND ANY STRUCTURE OR PARTS OF A STRUCTURE AS NOTED ON THE PLANS SHALL BE SUBMITTED TO THE ENGINEER FOR APPROVAL BEFORE CONSTRUCTION OF THE FALSEWORK OR FORMS IS STARTED.

REINFORCING STEEL:

ALL REINFORCING STEEL SHALL BE DEFORMED. DIMENSIONS RELATIVE TO PLACEMENT OF REINFORCING ARE TO CENTERS OF BARS UNLESS OTHERWISE INDICATED IN THE PLANS. DIMENSIONS ON BAR DETAILS ARE TO CENTERS OF BARS OR ARE OUT TO OUT AS INDICATED ON PLANS.

WIRE BAR SUPPORTS SHALL BE PROVIDED FOR REINFORCING STEEL WHERE INDICATED ON THE PLANS. WHEN BAR SUPPORT PIECES ARE PLACED IN CONTINUOUS LINES, THEY SHALL BE SO PLACED THAT THE ENDS OF THE SUPPORTING WIRES SHALL BE LAPPED TO LOCK LEGS ON ADJOINING PIECES.

STRUCTURAL STEEL:

AT THE CONTRACTOR'S OPTION, HE MAY SUBSTITUTE 7/8" Ø SHEAR STUDS FOR THE 3/4" Ø STUDS SPECIFIED ON THE PLANS. THIS SUBSTITUTION SHALL BE MADE AT THE RATE OF 3 - 7/8" Ø STUDS FOR 4 - 3/4" Ø STUDS, AND STUD SPACING CHANGES SHALL BE MADE AS NECESSARY TO PROVIDE THE SAME EQUIVALENT NUMBER OF 7/8" Ø STUDS ALONG THE BEAM AS SHOWN FOR 3/4" Ø STUDS BASED ON THE RATIO OF 3 - 7/8" Ø STUDS FOR 4 - 3/4" Ø STUDS. STUDS OF THE LENGTH SPECIFIED ON THE PLANS MUST BE PROVIDED. THE MAXIMUM SPACING SHALL BE 2'-0".

EXCEPT AT THE INTERIOR SUPPORTS OF CONTINUOUS BEAMS WHERE THE COVER PLATE IS IN CONTACT WITH BEARING PLATE, THE CONTRACTOR MAY, AT HIS OPTION, SUBSTITUTE FOR THE COVER PLATES DESIGNATED ON THE PLANS COVER PLATES OF THE EQUIVALENT AREA PROVIDED THESE PLATES ARE AT LEAST 5/16" IN THICKNESS AND DO NOT EXCEED A WIDTH EQUAL TO THE FLANGE WIDTH LESS 2" OR A THICKNESS EQUAL TO 2 TIMES THE FLANGE THICKNESS. THE SIZE OF FILLET WELDS SHALL CONFORM TO THE REQUIREMENTS OF THE CURRENT ANSI/AASHTO/AWS "BRIDGE WELDING CODE". ELECTROSLAG WELDING WILL NOT BE PERMITTED.

WITH THE SOLE EXCEPTION OF EDGES AT SURFACES WHICH BEAR ON OTHER SURFACES, ALL SHARP EDGES AND ENDS OF SHAPES AND PLATES SHALL BE SLIGHTLY ROUNDED BY SUITABLE MEANS TO A RADIUS OF APPROXIMATELY 1/16 INCH OR EQUIVALENT FLAT SURFACE AT A SUITABLE ANGLE PRIOR TO PAINTING, GALVANIZING, OR METALLIZING.

HANDRAILS AND POSTS:

METAL STANDARDS AND FACES OF THE CONCRETE END POSTS FOR THE METAL RAIL SHALL BE SET NORMAL TO THE GRADE OF THE CURB, UNLESS OTHERWISE SHOWN ON PLANS. THE METAL RAIL AND TOPS OF CONCRETE POSTS USED WITH THE ALUMINUM RAIL SHALL BE BUILT PARALLEL TO THE GRADE OF THE CURB.

METAL HANDRAILS SHALL BE IN ACCORDANCE WITH THE PLANS. RAILS SHALL BE AS MANUFACTURED FOR BRIDGE RAILING. CASTINGS SHALL BE OF A UNIFORM APPEARANCE. FINS AND OTHER DEFORMATIONS RESULTING FROM CASTING OR OTHERWISE SHALL BE REMOVED IN A MANNER SO THAT A UNIFORM COLORING OF THE COMPLETED CASTING SHALL BE OBTAINED. CASTINGS WITH DISCOLORATIONS OR OF NON-UNIFORM COLORING WILL NOT BE ACCEPTED. CERTIFIED MILL REPORTS ARE REQUIRED FOR METAL RAILS AND POSTS.

SPECIAL NOTES:

GENERALLY, IN CASE OF DISCREPANCY, THIS STANDARD SHEET OF NOTES SHALL GOVERN OVER THE SPECIFICATIONS, BUT THE REMAINDER OF THE PLANS SHALL GOVERN OVER NOTES HEREON, AND SPECIAL PROVISIONS SHALL GOVERN OVER ALL. SEE SPECIFICATIONS ARTICLE 105-4.

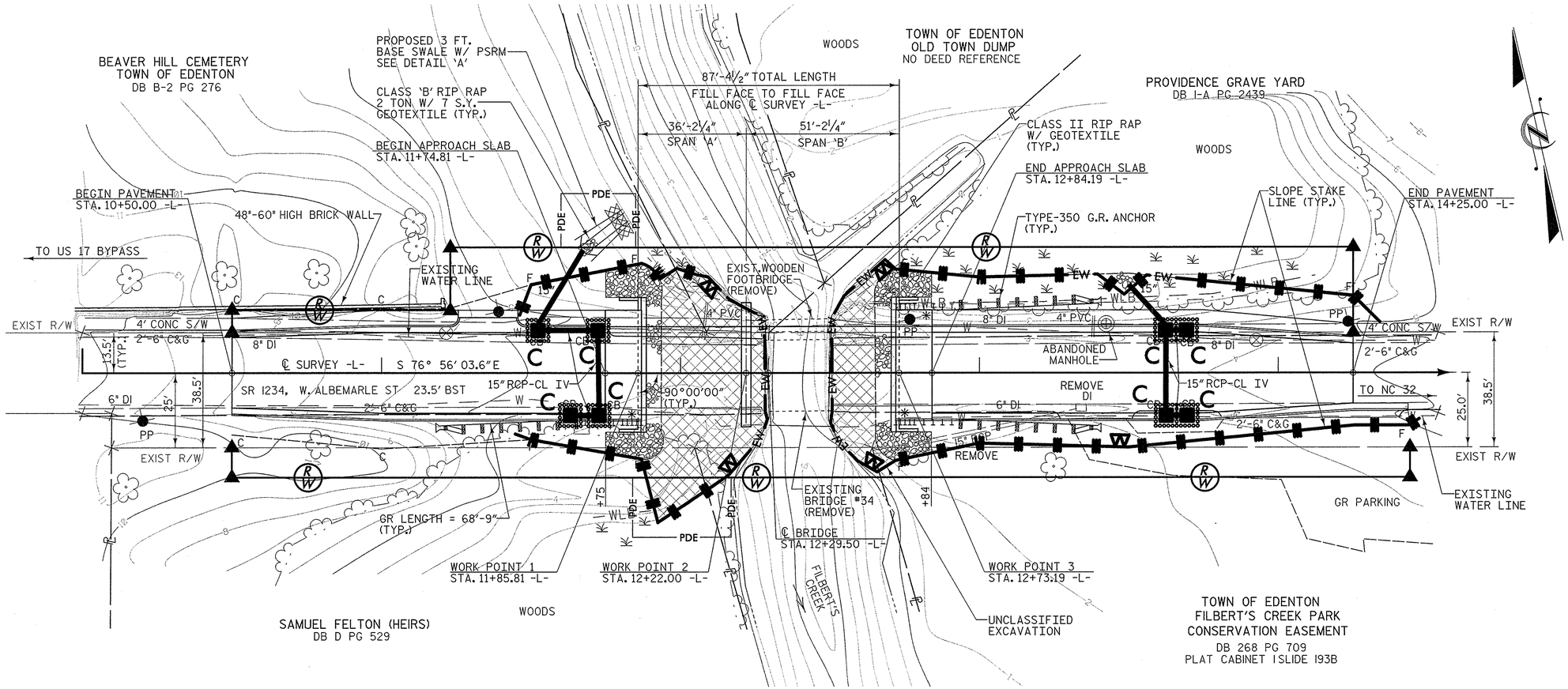

PLAN

SCALE: 1" = 20'

Matthew Harvey
LEVEL IIIA NAME

412
LEVEL IIIA CERTIFICATION NO.

THESE EROSION AND SEDIMENT CONTROL PLANS COMPLY WITH THE REGULATIONS SET FORTH BY THE NCG-010000 GENERAL CONSTRUCTION PERMIT EFFECTIVE AUGUST 3, 2011 ISSUED BY THE NORTH CAROLINA DEPARTMENT OF ENVIRONMENT AND NATURAL RESOURCES DIVISION OF WATER QUALITY.

ROADSIDE ENVIRONMENTAL UNIT
DEPARTMENT OF TRANSPORTATION
DIVISION OF HIGHWAYS
RALEIGH, N.C.

2012 STANDARD SPECIFICATIONS

2012 STANDARD DRAWINGS

1604.01	Railroad Erosion Control Detail
1605.01	Temporary Silt Fence
1606.01	Special Sediment Control Fence
1607.01	Gravel Construction Entrance
1622.01	Temporary Berms and Slope Drains
1630.01	Riser Basin
1630.02	Silt Basin Type B
1630.03	Temporary Silt Ditch
1630.04	Stilling Basin
1630.05	Temporary Diversion
1630.06	Special Stilling Basin
1631.01	Matting Installation
1632.01	Rock Inlet Sediment Trap Type A
1632.02	Rock Inlet Sediment Trap Type B
1632.03	Rock Inlet Sediment Trap Type C
1633.01	Temporary Rock Silt Check Type A
1633.02	Temporary Rock Silt Check Type B
1634.01	Temporary Rock Sediment Dam Type A
1634.02	Temporary Rock Sediment Dam Type B
1635.01	Rock Pipe Inlet Sediment Trap Type A
1635.02	Rock Pipe Inlet Sediment Trap Type B
1640.01	Coir Fiber Baffle
1645.01	Temporary Stream Crossing

NOTES: ANY DEVIATION FROM OPTIONS GIVEN WILL REQUIRE PRIOR APPROVAL BY ENGINEER.

ADDITIONAL EROSION CONTROL DEVICES MAY NEED TO BE INSTALLED AS DIRECTED BY THE ENGINEER.

Std. #	Description	Symbol
1605.01	Temporary Silt Fence	
1606.01	Special Sediment Control Fence	
1622.01	Temporary Berms and Slope Drains	
1630.02	Silt Basin Type B	
1630.03	Temporary Silt Ditch	TD
1630.05	Temporary Diversion	TD
1630.06	Special Stilling Basin	
1632.03	Rock Inlet Sediment Trap Type C	
1633.01	Temporary Rock Silt Check Type-A	
	Temporary Rock Silt Check Type-A with Matting and Polyacrylamide (PAM)	
1633.02	Temporary Rock Silt Check Type-B	
	Wattle	
	Wattle with Polyacrylamide (PAM)	
1634.02	Temporary Rock Sediment Dam Type-B	
1635.01	Rock Pipe Inlet Sediment Trap Type-A	

PROJECT NO. 17BP.1.R.36
CHOWAN COUNTY
STATION: 12+29.50 -L-

REPLACES BRIDGE NO. 34

STATE OF NORTH CAROLINA
DEPARTMENT OF TRANSPORTATION
RALEIGH

BRIDGE ON SR 1234
OVER FILBERT'S CREEK
BETWEEN US 17 BYP. & NC 32

31'-0" CLEAR ROADWAY - 90° SKEW

PROGRESS DRAWING
DO NOT USE FOR CONSTRUCTION

PLANS PREPARED BY:
MULKEY ENGINEERS & CONSULTANTS
PO BOX 33127
RALEIGH, N.C. 27636
(919) 851-1912
(919) 851-1918 (FAX)
WWW.MULKEYINC.COM
NC LICENSE NO. C-1021

REVISIONS						SHEET NO.
NO.	BY:	DATE:	NO.	BY:	DATE:	34
1			3			TOTAL SHEETS
2			4			36

DRAWN BY : _____ DATE : _____
CHECKED BY : _____ DATE : _____

12/13/2013 1:62:50 PM R:\Hydraulics\Erosion Control\Chowan 34_SD_EC_01.dgn

PROJECT REFERENCE NO.	SHEET NO.
17BPJ.R.36	35
R/W SHEET NO.	
ROADWAY DESIGN ENGINEER	HYDRAULICS ENGINEER

COIR FIBER WATTLE DETAIL

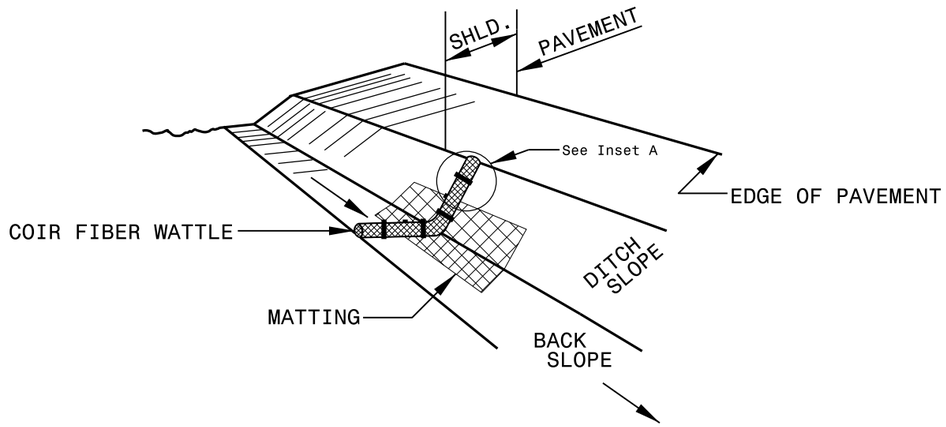

ISOMETRIC VIEW

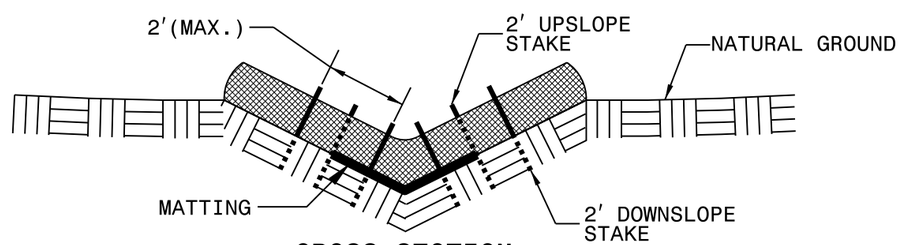

CROSS SECTION VEE DITCH

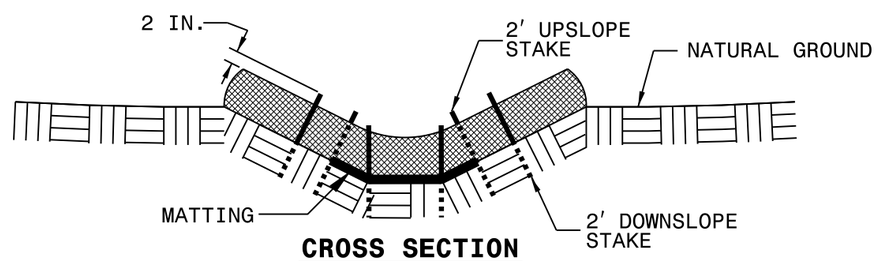

CROSS SECTION TRAPEZOIDAL DITCH

NOTES:

USE MINIMUM 12 IN. DIAMETER COIR FIBER (COCONUT FIBER) WATTLE.

USE 2 FT. WOODEN STAKES WITH A 2 IN. BY 2 IN. NOMINAL CROSS SECTION.

ONLY INSTALL WATTLE(S) TO A HEIGHT IN DITCH SO FLOW WILL NOT WASH AROUND WATTLE AND SCOUR DITCH SLOPES AND AS DIRECTED.

INSTALL A MINIMUM OF 2 UPSLOPE STAKES AND 4 DOWNSLOPE STAKES AT AN ANGLE TO WEDGE WATTLE TO BOTTOM OF DITCH.

PROVIDE STAPLES MADE OF 0.125 IN. DIAMETER STEEL WIRE FORMED INTO A U SHAPE NOT LESS THAN 12″ IN LENGTH.

INSTALL STAPLES APPROXIMATELY EVERY 1 LINEAR FOOT ON BOTH SIDES OF WATTLE AND AT EACH END TO SECURE IT TO THE SOIL.

INSTALL MATTING IN ACCORDANCE WITH SECTION 1631 OF THE STANDARD SPECIFICATIONS.

INSET A

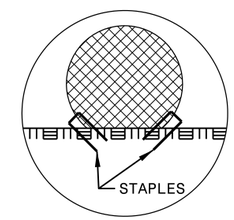

INSET B

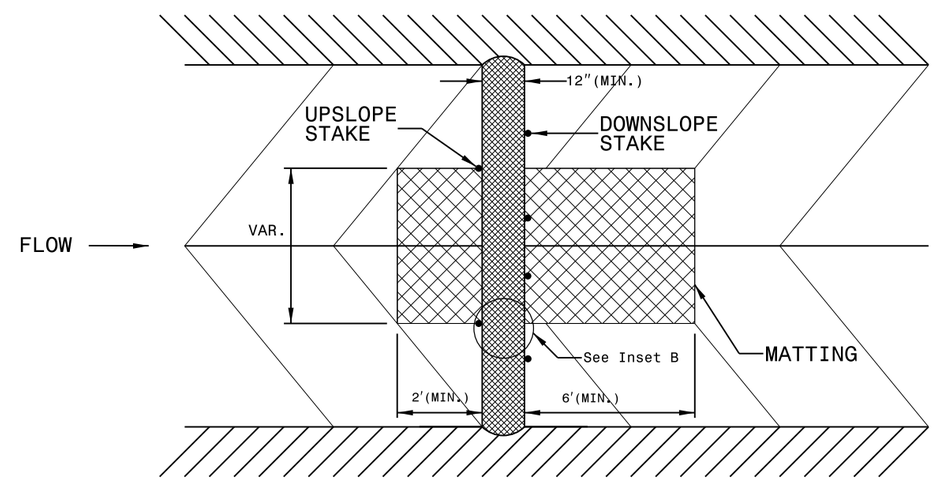

TOP VIEW

PROJECT REFERENCE NO.	SHEET NO.
17BP.1.R.36	36
R/W SHEET NO.	
ROADWAY DESIGN ENGINEER	HYDRAULICS ENGINEER

COIR FIBER WATTLE BARRIER DETAIL

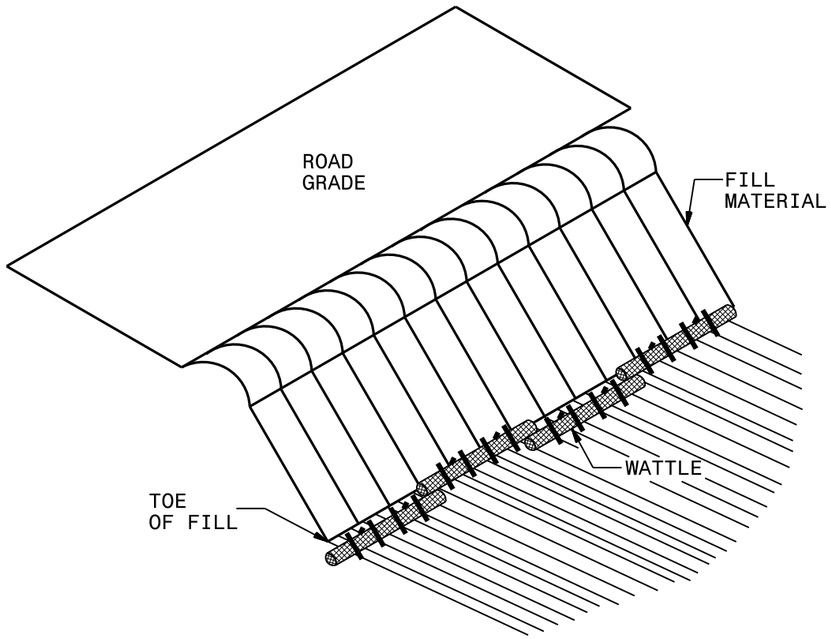

ISOMETRIC VIEW

NOTES:

USE MINIMUM 18 IN. NOMINAL DIAMETER COIR FIBER (COCONUT) WATTLE AND LENGTH OF 10 FT.

EXCAVATE A 2 TO 3 INCH TRENCH FOR WATTLE TO BE PLACED.

DO NOT PLACE WATTLES ON TOE OF SLOPE.

USE 2 FT. WOODEN STAKES WITH A 2 IN. BY 2 IN. NOMINAL CROSS SECTION.

INSTALL A MINIMUM OF 2 UPSLOPE STAKES AND 4 DOWNSLOPE STAKES AT AN ANGLE TO WEDGE WATTLE TO GROUND.

PROVIDE STAPLES MADE OF 0.125 IN. DIAMETER STEEL WIRE FORMED INTO A U SHAPE NOT LESS THAN 12″ IN LENGTH.

INSTALL STAPLES APPROXIMATELY EVERY 1 LINEAR FOOT ON BOTH SIDES OF WATTLE AND AT EACH END TO SECURE IT TO THE SOIL.

FOR BREAKS ALONG LARGE SLOPES, USE MAXIMUM SPACING OF 20 FT.

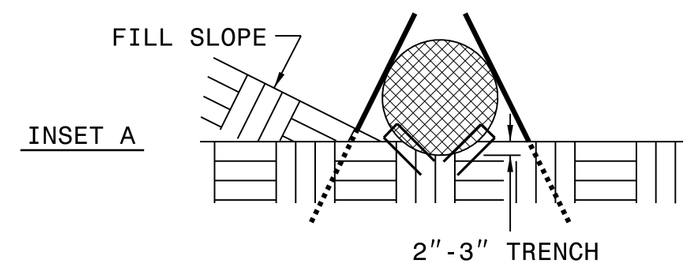

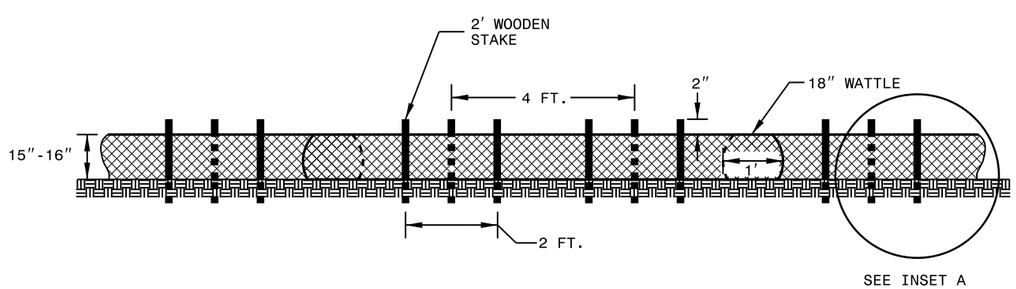

FRONT VIEW

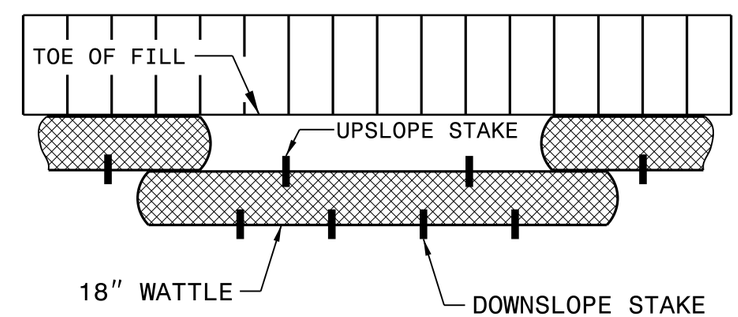

TOP VIEW

PROJECT REFERENCE NO.	SHEET NO.
17BPJ.R.36	37
R/W SHEET NO.	
ROADWAY DESIGN ENGINEER	HYDRAULICS ENGINEER

SILT FENCE COIR FIBER WATTLE BREAK DETAIL

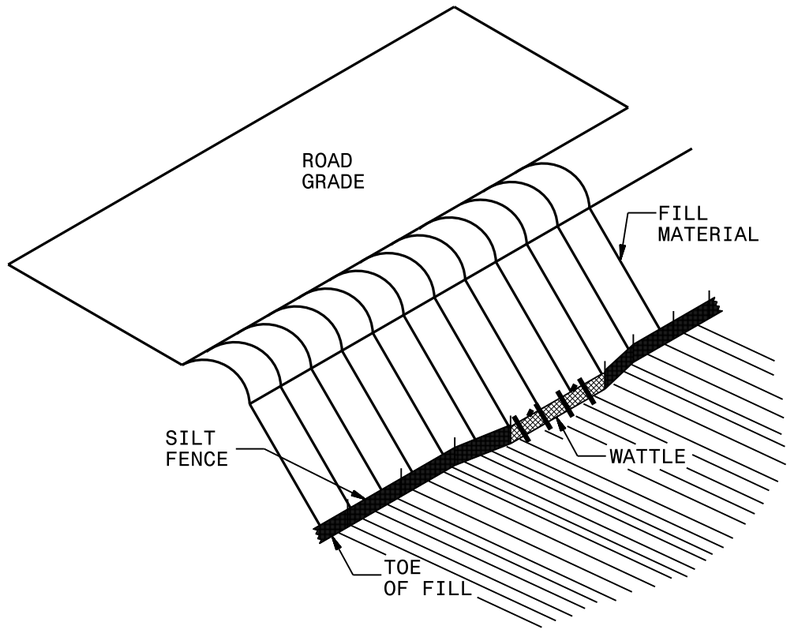

ISOMETRIC VIEW

NOTES:

USE MINIMUM 12 IN. DIAMETER COIR FIBER (COCONUT FIBER) WATTLE AND LENGTH OF 10 FT.

EXCAVATE A 1 TO 2 INCH TRENCH FOR WATTLE TO BE PLACED.

DO NOT PLACE WATTLE ON TOE OF SLOPE.

USE 2 FT. WOODEN STAKES WITH A 2 IN. BY 2 IN. NOMINAL CROSS SECTION.

INSTALL A MINIMUM OF 2 UPSLOPE STAKES AND 4 DOWNSLOPE STAKES AT AN ANGLE TO WEDGE WATTLE TO GROUND.

PROVIDE STAPLES MADE OF 0.125 IN. DIAMETER STEEL WIRE FORMED INTO A U SHAPE NOT LESS THAN 12″ IN LENGTH.

INSTALL STAPLES APPROXIMATELY EVERY 1 LINEAR FOOT ON BOTH SIDES OF WATTLE AND AT EACH END TO SECURE IT TO THE SOIL.

WATTLE INSTALLATION CAN BE ON OUTSIDE OF THE SILT FENCE AS DIRECTED.

INSTALL TEMPORARY SILT FENCE IN ACCORDANCE WITH SECTION 1605 OF THE STANDARD SPECIFICATIONS.

INSET A

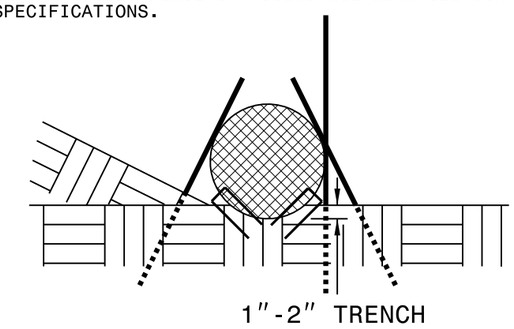

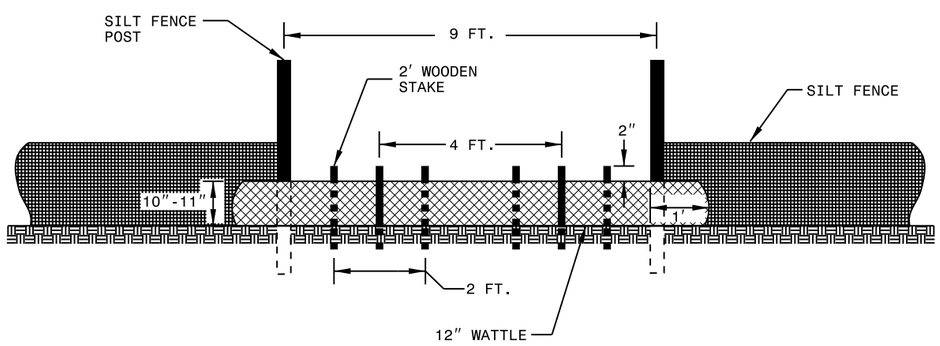

VIEW FROM SLOPE

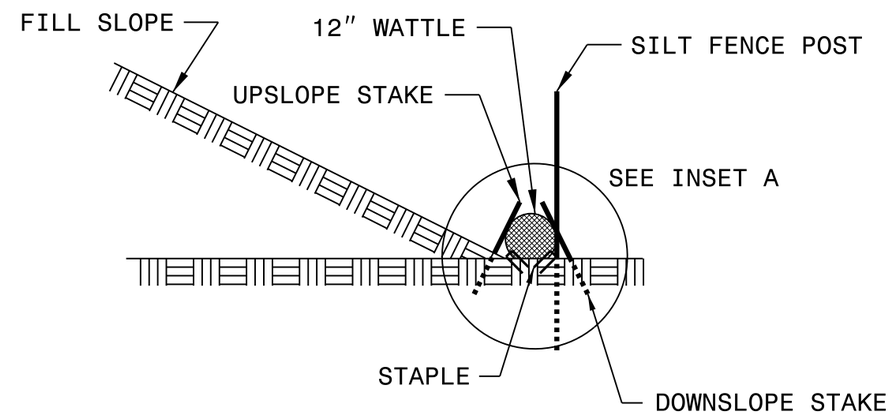

SIDE VIEW

PROJECT REFERENCE NO.	SHEET NO.

NOTES:
1) DETAIL DOES NOT APPLY TO OGAFC AND ULTRA-THIN BONDED WEARING COURSE.
2) BACKFILL SHOULDER WITH APPROVED MATERIAL.
3) THE SHOULDER WEDGE DEVICE MAY BE DISENGAGED AT PAVED DRIVEWAYS AND SIDE STREETS.

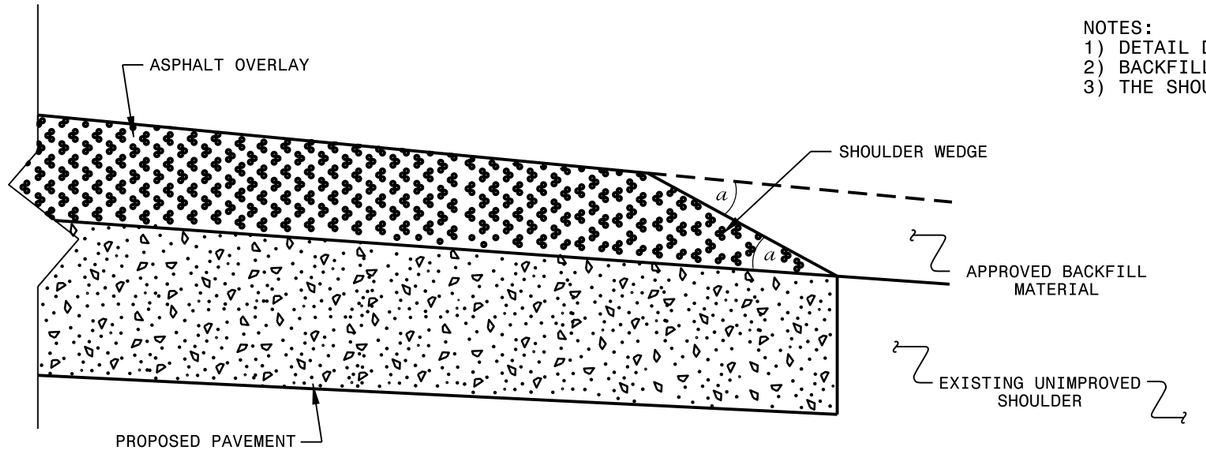

SHOULDER WEDGE DETAIL

(Resurfacing Projects w/ Widening or with Existing Paved Shoulder having no dropoffs)

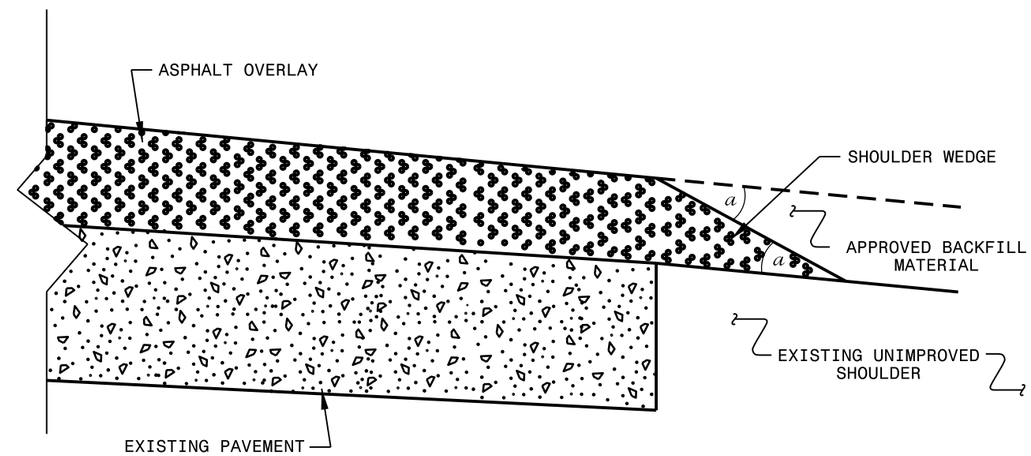

SHOULDER WEDGE DETAIL

(Resurfacing Projects w/ NO Widening)

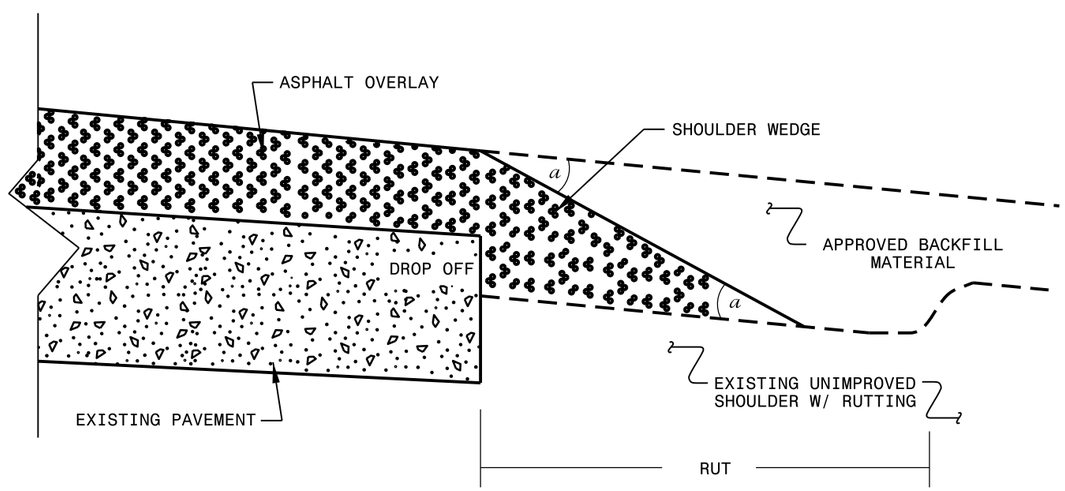

SHOULDER WEDGE DETAIL

(Resurfacing Adjacent to Rutted Shoulder)

- SHOULDER WEDGE ANGLE = 30°

CONTRACT STANDARDS AND DEVELOPMENT UNIT
Office 919-707-6950 FAX 919-250-4119

SHOULDER WEDGE DETAILS

ORIGINAL BY:	T.SPELL	DATE:	7-19-11
MODIFIED BY:		DATE:	10/16/12
CHECKED BY:		DATE:	
FILE SPEC.:	$:usr/details/stand/shoulderwedgedetail.dgn		

$$$$$$SYSTIME$$$$$$
$$$$$$USERNAME$$$$$$

PROJECT REFERENCE NO.	SHEET NO.
17BP.J.R.36	38
ROADWAY DESIGN ENGINEER	HYDRAULICS ENGINEER

DIVISION OF HIGHWAYS
STATE OF NORTH CAROLINA

SOIL STABILIZATION TIMEFRAMES

SITE DESCRIPTION	STABILIZATION TIME	TIMEFRAME EXCEPTIONS
PERIMETER DIKES, SWALES, DITCHES AND SLOPES	7 DAYS	NONE
HIGH QUALITY WATER (HQW) ZONES	7 DAYS	NONE
SLOPES STEEPER THAN 3:1	7 DAYS	IF SLOPES ARE 10' OR LESS IN LENGTH AND ARE NOT STEEPER THAN 2:1, 14 DAYS ARE ALLOWED.
SLOPES 3:1 OR FLATTER	14 DAYS	7 DAYS FOR SLOPES GREATER THAN 50' IN LENGTH.
ALL OTHER AREAS WITH SLOPES FLATTER THAN 4:1	14 DAYS	NONE, EXCEPT FOR PERIMETERS AND HQW ZONES.

C.1.1

NORTH CAROLINA ONE-CALL CENTER 1-800-632-4949 OR 811
CONTRACTOR SHALL ADHERE TO THE NORTH CAROLINA UNDERGROUND UTILITY SAFETY AND DAMAGE PREVENTION ACT FOR ALL EXCAVATIONS OPERATIONS.

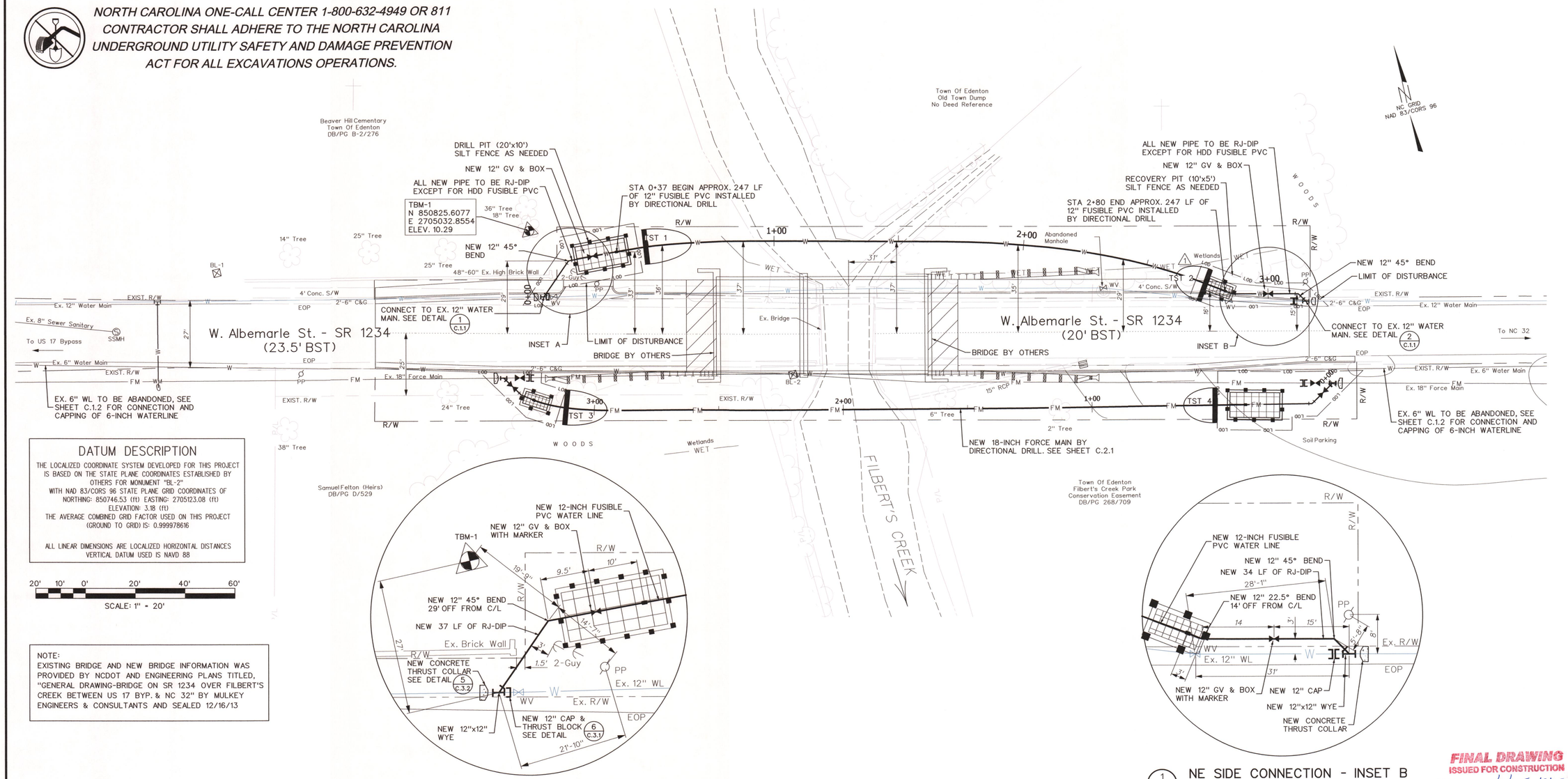

DATUM DESCRIPTION

THE LOCALIZED COORDINATE SYSTEM DEVELOPED FOR THIS PROJECT IS BASED ON THE STATE PLANE COORDINATES ESTABLISHED BY OTHERS FOR MONUMENT "BL-2"
WITH NAD 83/CORS 96 STATE PLANE GRID COORDINATES OF
NORTHING: 850746.53 (ft) EASTING: 2705123.08 (ft)
ELEVATION: 3.18 (ft)
THE AVERAGE COMBINED GRID FACTOR USED ON THIS PROJECT (GROUND TO GRID) IS: 0.999978616

ALL LINEAR DIMENSIONS ARE LOCALIZED HORIZONTAL DISTANCES
VERTICAL DATUM USED IS NAVD 88

20' 10' 0' 20' 40' 60'
SCALE: 1" = 20'

NOTE:
EXISTING BRIDGE AND NEW BRIDGE INFORMATION WAS PROVIDED BY NCDOT AND ENGINEERING PLANS TITLED, "GENERAL DRAWING-BRIDGE ON SR 1234 OVER FILBERT'S CREEK BETWEEN US 17 BYP. & NC 32" BY MULKEY ENGINEERS & CONSULTANTS AND SEALED 12/16/13

1 C.1.1 NW SIDE CONNECTION - INSET A
SCALE: 1" = 10'

1 C.1.1 NE SIDE CONNECTION - INSET B
SCALE: 1" = 10'

FINAL DRAWING
ISSUED FOR CONSTRUCTION
DATE: 1/29/2015

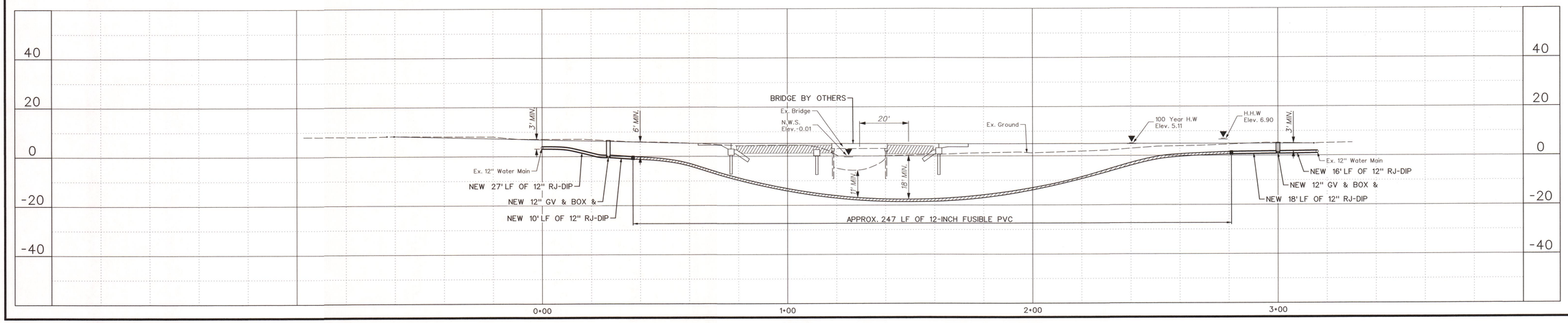

REVISIONS
1 REVISED TST 2 10/08/2014

THE WOOTEN COMPANY
ENGINEERING | PLANNING | ARCHITECTURE
301 West 14th Street Greenville NC 27834
252.757.1096 fax 252.757.3231
License Number: F-0115

TOWN OF EDENTON NORTH CAROLINA
CHOWAN COUNTY
FILBERT'S CREEK BRIDGE UTILITIES RELOCATION
12 - INCH FUSIBLE PVC WATER MAIN

NORTH CAROLINA PROFESSIONAL SEAL 032367 ENGINEER BLADE HARVIN 10/8/2014

DESIGNED BY:	ASH
DRAWN BY:	DRS
CHECKED BY:	ASH
PROJECT NO.:	2478 - FL
DATE:	AUGUST 2014
SCALE:	1" = 20'

SHEET
C.1.1

Printer5.plt.plt
20.0000 " / in.
dscargle
1/27/2015 4:28:54 PM
T:\Projects\Edenton-2478\FL\CADD\Sheets\SHTS2478-FL.dgn

C.1.2

NORTH CAROLINA ONE-CALL CENTER 1-800-632-4949 OR 811
CONTRACTOR SHALL ADHERE TO THE NORTH CAROLINA
UNDERGROUND UTILITY SAFETY AND DAMAGE PREVENTION
ACT FOR ALL EXCAVATIONS OPERATIONS.

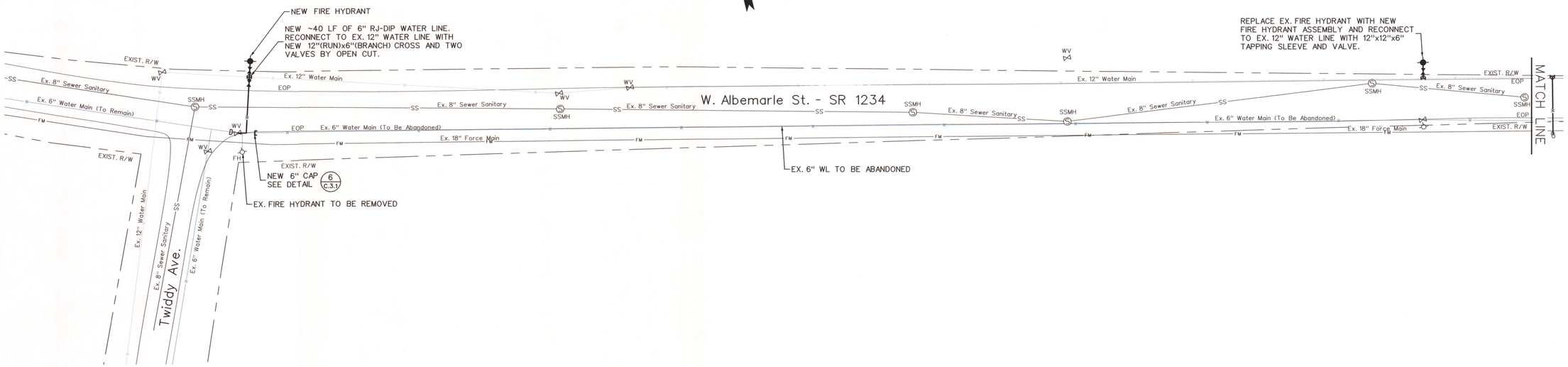

30' 15' 0 30' 60' 90'
SCALE: 1" = 30'

NOTE:
1. CONTRACTOR TO CONFIRM LOCATION AND SIZE OF EX. UTILITIES PRIOR TO CONSTRUCTION.
2. ALL OPEN CUT PIPE TO BE RJ-DIP

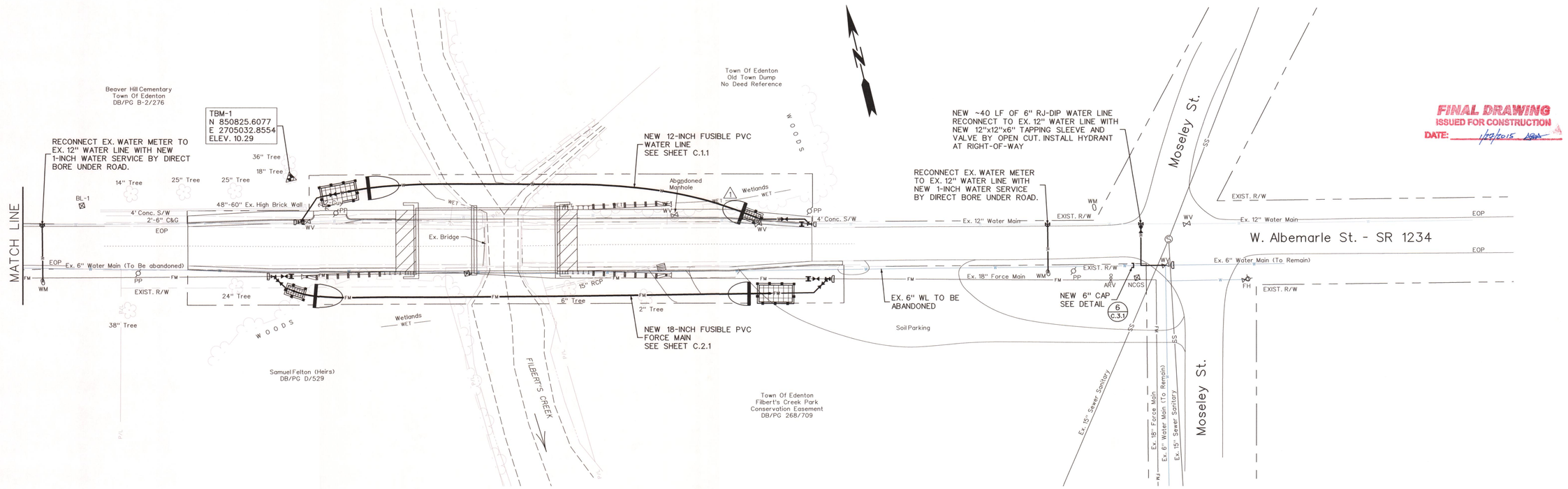

FINAL DRAWING
ISSUED FOR CONSTRUCTION
DATE: 1/27/2015

REVISIONS	
1 REVISED TST 2	10/08/2014

THE WOOTEN COMPANY
ENGINEERING | PLANNING | ARCHITECTURE
301 West 14th Street Greenville NC 27834
252.757.1096 fax 252.757.3221
License Number: F-0115

LOCATION
TOWN OF EDENTON NORTH CAROLINA
FILBERT'S CREEK BRIDGE UTILITIES RELOCATION
EX. 6-INCH WATER LINE RECONNECTION

NORTH CAROLINA PROFESSIONAL SEAL 032887 ENGINEER ALADE HARVIN 10/8/2014

DESIGNED BY:	ASH
DRAWN BY:	DRS
CHECKED BY:	ASH
PROJECT NO.:	2478 - FL
DATE:	AUGUST 2014
SCALE:	HORZ.: 1" = 30' VERT.: 1" = 3'

SHEET
C.1.2

Printer5.plt.plt
30.0000 " / in.
dscargle
1/27/2015 4:30:28 PM
T:\Projects\Edenton-2478\FL\CADD\Sheets\SHTS2478-FL.dgn

C.2.1

NORTH CAROLINA ONE-CALL CENTER 1-800-632-4949 OR 811
CONTRACTOR SHALL ADHERE TO THE NORTH CAROLINA
UNDERGROUND UTILITY SAFETY AND DAMAGE PREVENTION
ACT FOR ALL EXCAVATIONS OPERATIONS.

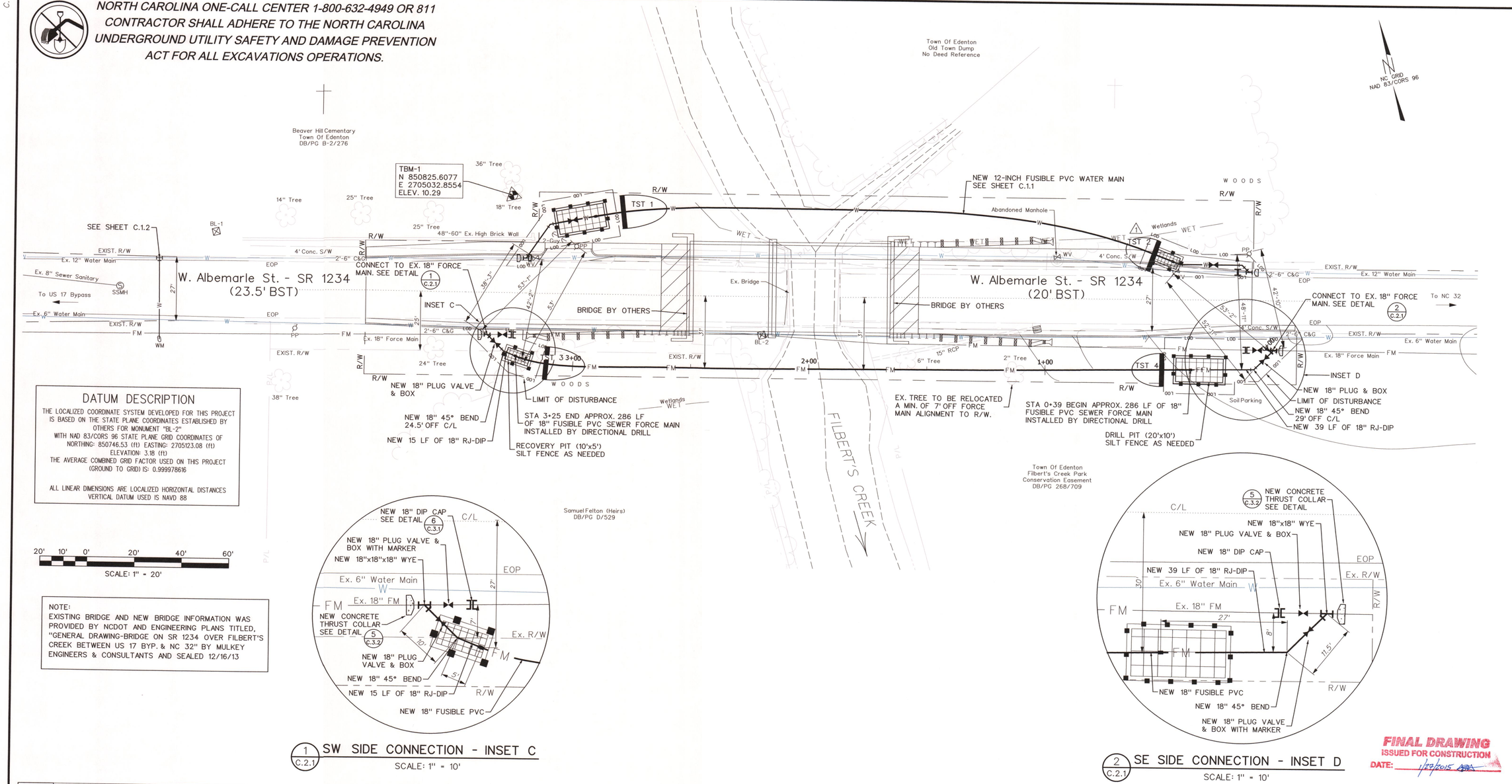

DATUM DESCRIPTION

THE LOCALIZED COORDINATE SYSTEM DEVELOPED FOR THIS PROJECT IS BASED ON THE STATE PLANE COORDINATES ESTABLISHED BY OTHERS FOR MONUMENT "BL-2"
WITH NAD 83/CORS 96 STATE PLANE GRID COORDINATES OF
NORTHING: 850746.53 (ft) EASTING: 2705123.08 (ft)
ELEVATION: 3.18 (ft)
THE AVERAGE COMBINED GRID FACTOR USED ON THIS PROJECT (GROUND TO GRID) IS: 0.999978616

ALL LINEAR DIMENSIONS ARE LOCALIZED HORIZONTAL DISTANCES
VERTICAL DATUM USED IS NAVD 88

20' 10' 0' 20' 40' 60'
SCALE: 1" = 20'

NOTE:
EXISTING BRIDGE AND NEW BRIDGE INFORMATION WAS PROVIDED BY NCDOT AND ENGINEERING PLANS TITLED, "GENERAL DRAWING-BRIDGE ON SR 1234 OVER FILBERT'S CREEK BETWEEN US 17 BYP. & NC 32" BY MULKEY ENGINEERS & CONSULTANTS AND SEALED 12/16/13

1 C.2.1 SW SIDE CONNECTION - INSET C
SCALE: 1" = 10'

2 C.2.1 SE SIDE CONNECTION - INSET D
SCALE: 1" = 10'

FINAL DRAWING
ISSUED FOR CONSTRUCTION
DATE: 1/29/2015

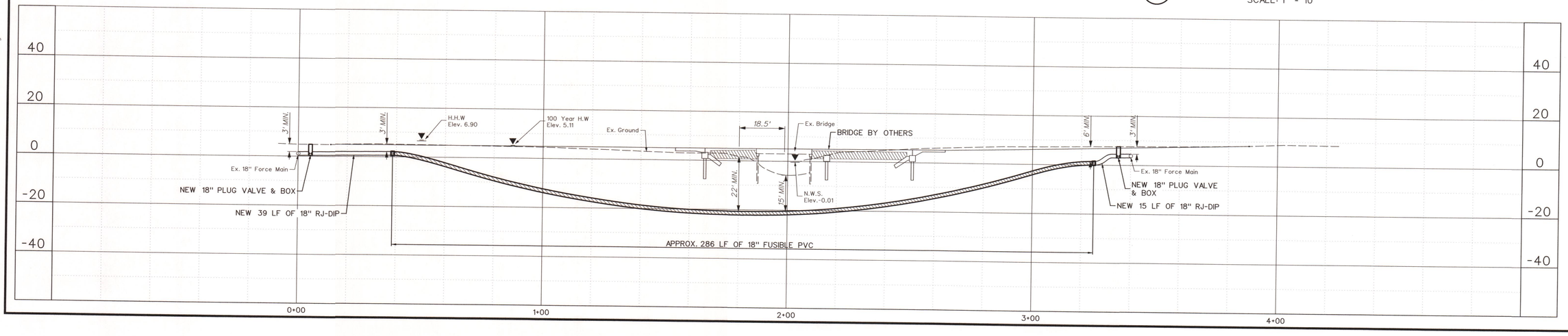

REVISIONS
1 REVISED TST 2 10/08/2014

THE WOOTEN COMPANY
ENGINEERING | PLANNING | ARCHITECTURE
301 West 14th Street Greenville NC 27834
252.757.1095 fax 252.757.3221
License Number: F-0115

TOWN OF EDENTON NORTH CAROLINA
CHOWAN COUNTY
FILBERT'S CREEK BRIDGE UTILITIES RELOCATION
18 - INCH FUSIBLE PVC SEWER FORCE MAIN

NORTH CAROLINA PROFESSIONAL SEAL 032587 ENGINEER BLADE HARRIN 10/8/2014

DESIGNED BY:	ASH
DRAWN BY:	DRS
CHECKED BY:	ASH
PROJECT NO.:	2478 - FL
DATE:	AUGUST 2014
SCALE:	1" = 20'

SHEET
C.2.1

Printer5.plt.plt
20.0000 " / in.
dscargle
1/27/2015 4:30:50 PM
T:\Projects\Edenton-2478\FL\CADD\Sheets\SHTS2478-FL.dgn

NOTES:

1. HYDRANT TO BE PLUMB. IF ADJUSTMENT IS NECESSARY AFTER PRESSURE TEST, RETESTING MAYBE REQUIRED BY OWNER
2. VALVE BOX SHALL NOT BE INSTALLED IN SLOPE SECTION.
3. MINIMUM OF 2'-6" FROM TOP OF SLOPE TO FIRE HYDRANT OR EXTENDED TO RIGTH-OF-WAY, WHICHEVER IS GREATER.

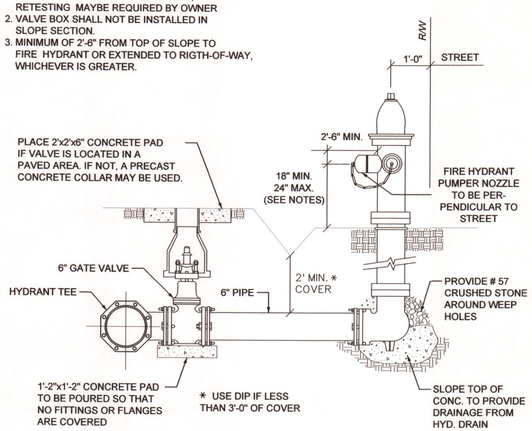

1 C.3.1 FIRE HYDRANT ASSEMBLY
NOT TO SCALE

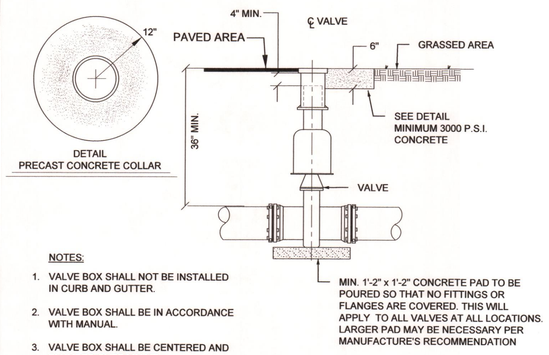

NOTES:

1. VALVE BOX SHALL NOT BE INSTALLED IN CURB AND GUTTER.
2. VALVE BOX SHALL BE IN ACCORDANCE WITH MANUAL.
3. VALVE BOX SHALL BE CENTERED AND PLUMBED OVER VALVE.

STANDARD VALVE BOX INSTALLATION (SMALLER THAN 12-INCH)

2 C.3.1 NOT TO SCALE

NOTES:

ONE POST TO BE INSTALLED FOR EACH VALVE.
WITNESS POST TO BE INSTALLED AT THE RIGHT OF WAY.
NO POST REQUIRED FOR FIRE HYDRANT ISOLATION VALVES.

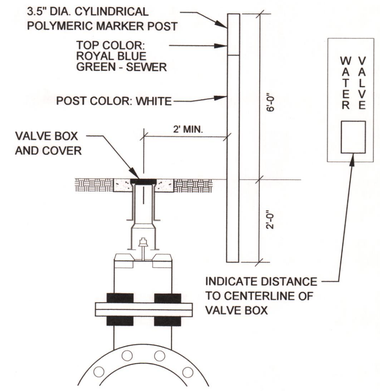

3 C.3.1 VALVE MARKER FOR MAINLINE VALVES
NOT TO SCALE

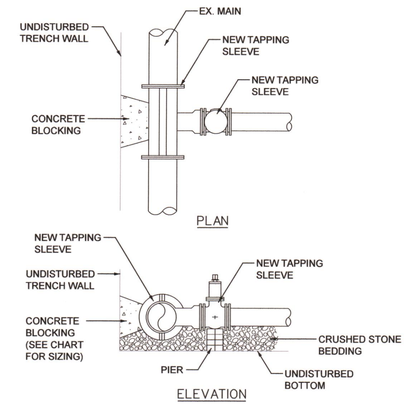

4 C.3.1 TAPPING SLEEVE AND VALVE
NOT TO SCALE

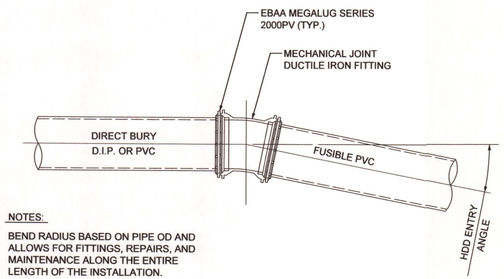

NOTES:

BEND RADIUS BASED ON PIPE OD AND ALLOWS FOR FITTINGS, REPAIRS, AND MAINTENANCE ALONG THE ENTIRE LENGTH OF THE INSTALLATION.

CONNECTION DETAIL - DIRECT BURY PIPE TO FUSIBLE PVC HDD

5 C.3.1 NOT TO SCALE

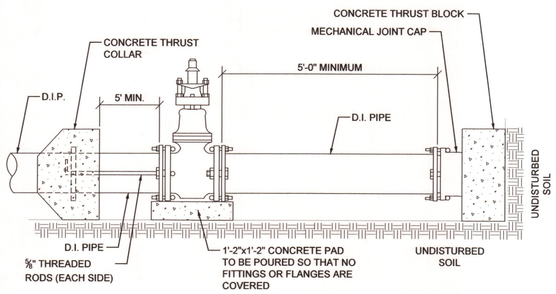

NOTE:

THIS DETAIL SHALL APPLY TO TEMPORARY CAPPING. PERMANENT DEAD END LINES TO BE EQUIPPED WITH BLOW OFF ASSEMBLY.

6 C.3.1 STANDARD CAPPING
NOT TO SCALE

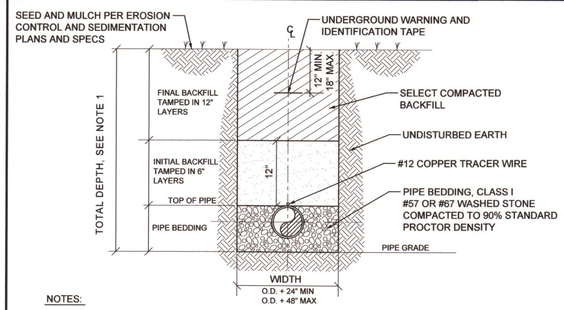

NOTES:

1. TYPICAL FOR PIPES DEPTHS OF 3' TO 14'. FOR DEPTHS GREATER THEN 14' THE INITIAL BACKFILL SHALL BE SAME MATERIAL AS PIPE BEDDING MATERIAL. ALL TRENCHES 20' OR GREATER SHALL BE DUCTILE IRON PIPE.
2. FOR DEEP TRENCHES REQUIRING SHORING AND BRACING, DIMENSIONS SHALL BE TAKEN FROM THE INSIDE FACE OF THE SHORING AND BRACING.
3. STONE BEDDING FOR PVC WATER MAINS SHALL BE REQUIRED WHERE UNSUITABLE SUBSURFACE CONDITIONS EXIST AS DIRECTED BY ENGINEER.
4. NO ROCKS OR BOULDERS 4" OR LARGER SHALL BE USED IN INITIAL BACKFILL.
5. SELECT BACKFILL MATERIAL SHALL BE USED IN ALL LOCATIONS WHERE EXCAVATED MATERIAL IS DETERMINED, BY THE ENGINEER / CONSTRUCTION OBSERVER, TO BE UNSUITABLE FOR BACK FILLING.
6. ALL TRENCHING AND EXCAVATION SHALL BE IN ACCORDANCE WITH THE LATEST EDITION OF THE NORTH CAROLINA OCCUPATIONAL SAFETY AND HEALTH STANDARDS FOR THE CONSTRUCTION INDUSTRY MANUAL.

7 C.3.1 TYPICAL PIPE TRENCH AND PIPE BEDDING
NOT TO SCALE

FINAL DRAWING
ISSUED FOR CONSTRUCTION
DATE: 1/27/2015

REVISIONS

THE WOOTEN COMPANY
ENGINEERING | PLANNING | ARCHITECTURE
301 West 14th Street Greenville NC 27834
252.757.1096 fax 252.757.3221
License Number: F-0115

TOWN OF EDENTON
CHOWAN COUNTY
NORTH CAROLINA
FILBERT'S BRIDGE UTILITIES RELOCATION
WATER DETAILS

NORTH CAROLINA PROFESSIONAL SEAL 032582 ENGINEER ASHLEY SLADE HARVIN 10/8/2014

DESIGNED BY:	ASH
DRAWN BY:	DRS
CHECKED BY:	ASH
PROJECT NO.:	2478 - FL
DATE:	AUGUST 2014
SCALE:	AS NOTED

SHEET
C.3.1

C.3.1
Printer5.plt.plt
0.0842 " / in.
dscorgie
1/27/2015 4:31:07 PM
T:\Projects\Edenton-2478\FL\CADD\Sheets\SHTS2478-FL.dgn

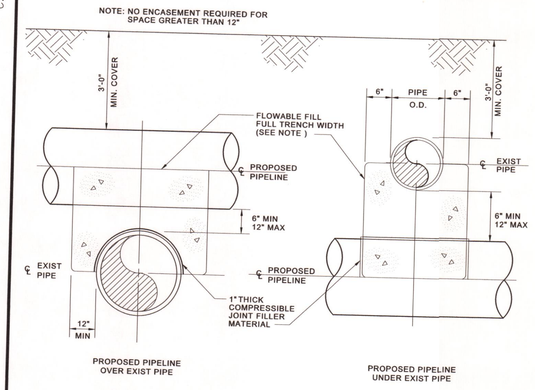

1 C.3.2 TYPICAL PIPE CROSSING DETAIL
NOT TO SCALE

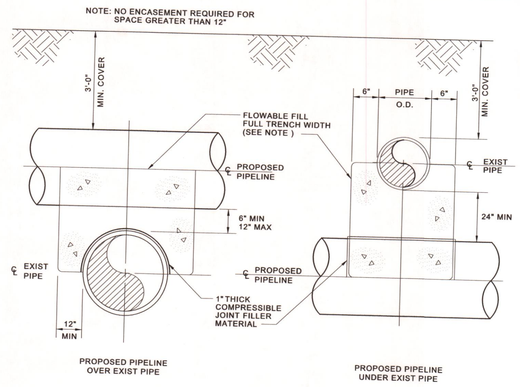

2 C.3.2 TYPICAL PIPE CROSSING WITHIN NCDOT RIGHT-OF-WAY DETAIL
NOT TO SCALE

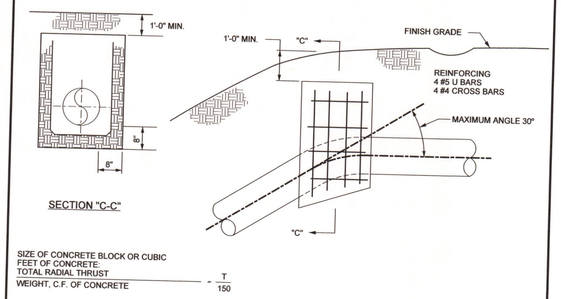

VERTICAL BENDS-THRUST 150 P.S.I.				
ANGLE	TOTAL RADIAL THRUST - LBS.			
	4" PIPE	6" PIPE	8" PIPE	12" PIPE
11¼° BEND	750	950	1,700	3,500
22½° BEND	1,000	1,800	3,000	7,500
30° BEND	1,250	2,500	4,000	9,500

3 C.3.2 VERTICAL THRUST BLOCK
NOT TO SCALE

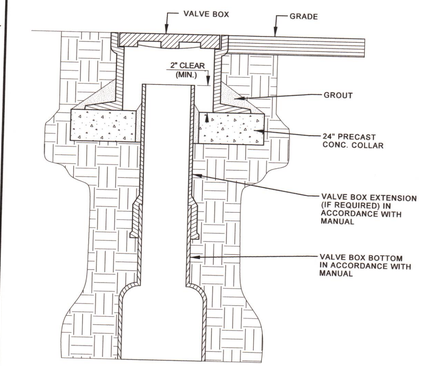

4 C.3.2 VALVE BOX DETAIL FOR VALVES 12" AND LARGER
NOT TO SCALE

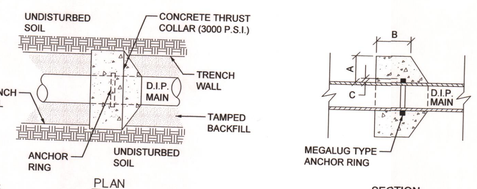

NOTES:
6" TO 16" MAINS=12-No.7 BARS
18" TO 36" MAINS+12-No.8 BARS
BARS PLACED AS SHOWN

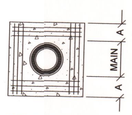

REINFORCING

SCHEDULE				
PIPE DIA.	CONCRETE THRUST COLLAR		ANCHOR RING	RING REQUIRED
	A	B	C	
6"-12"	1'-0"	1'-0"	2"	ONE
16"	1'-4"	1'-0"	2"	ONE
18"-20"	1'-4"	1'-0"	3"	ONE
24"	1'-4"	1'-0"	3"	TWO
30"	1'-4"	1'-2"	4"	TWO
36"	1'-4"	1'-4"	4"	TWO

5 C.3.2 THRUST COLLAR INSTALLATION
NOT TO SCALE

SQ. FT. BEARING AREA					
FITTING	4"	6"	8"	12"	16"
90° BEND	3	5	7	10	16
D.E. OR TEE	2	3	5	8	11
45° OR LESS	1	2	4	6	8

EXCAVATE AS NEARLY VERTICAL AS POSSIBLE

PROVIDE 4 MIL POLYETHYLENE AROUND PIPE TO PREVENT CONCRETE FROM BONDING TO PIPE

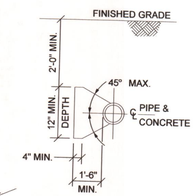

SECTION "A-A"

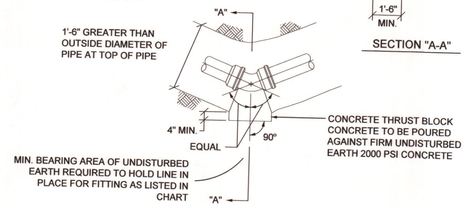

6 C.3.2 THRUST BLOCK FOR HORIZONTAL PIPE BENDS
NOT TO SCALE

TYPES OF THRUST BLOCKING
NOT TO SCALE

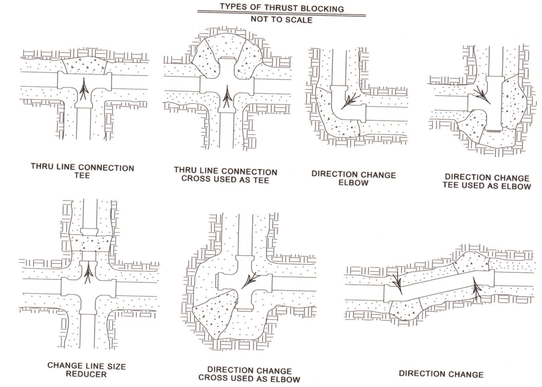

RESULTANT THRUST AT FITTING AT 150 PSI PRESSURE

NOMINAL PIPE DIA.	TOTAL POUNDS				
	DEAD END	90° BEND	45° BEND	22½ ° BEND	11¼ ° BEND
4"	2,700	3,800	2,100	1,100	530
6"	5,600	8,000	4,300	2,200	1,100
8"	9,700	13,600	7,400	3,800	1,900
10"	14,500	20,500	11,100	5,700	2,900
12"	20,500	29,000	15,700	8,000	4,000
14"	27,600	39,000	21,100	11,000	5,400
16"	35,700	50,400	27,300	14,000	7,000
18"	44,800	63,400	34,400	17,500	8,800
20"	55,000	77,800	42,100	21,500	10,800
24"	78,500	111,000	60,000	31,600	15,400
30"	120,600	170,600	92,300	47,100	23,600
36"	172,800	244,400	132,300	67,500	33,900
42"	233,300	330,000	178,600	91,000	45,700
48"	304,000	430,000	232,700	118,600	59,600
54"	384,100	543,200	294,000	149,000	75,300

NOTES:
1. TO DETERMINE THE SIZE OF A CONCRETE THRUST BLOCK, DIVIDE THE TOTAL FORCE BY THE BEARING VALUES OF THE SOIL. THE QUOTIENT WILL BE THE APPROXIMATE VALUES FOR VARIOUS TYPES OF SOIL ARE LISTED IN THE TABLE ABOVE.
2. CONCRETE SHALL HAVE A 28-DAY COMPRESSIVE STRENGTH OF 3000 psi.
3. LEAVE JOINTS CLEAR OF CONCRETE.
4. POLYETHYLENE SHALL BE WRAPPED AROUND FITTING WHERE CONCRETE BLOCKING MAY BE REMOVED.

SOIL	BEARING LOAD (LB./SQ. FT.)
MUCK	0
SOFT CLAY	1,000
SILT	1,500
SANDY SILT	3,000
SAND	4,000
SANDY CLAY	6,000
HARD CLAY	9,000

7 C.3.2 CONCRETE THRUST BLOCKING
NOT TO SCALE

FINAL DRAWING
ISSUED FOR CONSTRUCTION
DATE: 1/27/2015

REVISIONS

THE WOOTEN COMPANY
ENGINEERING | PLANNING | ARCHITECTURE
301 West 14th Street Greenville NC 27834
252.757.1096 fax 252.757.3221
License Number: F-0113

TOWN OF EDENTON
CHOWAN COUNTY NORTH CAROLINA
FILBERT'S BRIDGE UTILITIES RELOCATION
SEWER DETAILS

NORTH CAROLINA PROFESSIONAL SEAL 032561 ENGINEER C. BLADE MARTIN
10/8/2014

DESIGNED BY: ASH
DRAWN BY: DRS
CHECKED BY: ASH
PROJECT NO.: 2478 - FL
DATE: AUGUST 2014
SCALE: AS NOTED

SHEET
C.3.2

Printer5.plt.plt
0.0842 " / in.
dscarge
1/27/2015 4:31:18 PM
T:\Projects\Edenton-2478\FL\CADD\Sheets\SHTS2478-FL.dgn

C.3.3

LANE CLOSURE ON A TWO-LANE LOW-VOLUME ROAD

(ONE FLAGGER OPERATION)

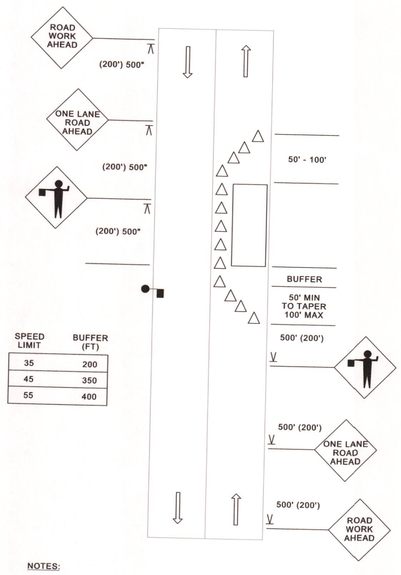

SPEED LIMIT	BUFFER (FT)
35	200
45	350
55	400

NOTES:

1. A SINGLE FLAGGER MAY BE ADEQUATE FOR LOW VOLUME APPLICATIONS. WHERE ONE FLAGGER IS USED, SUCH AS FOR SHORT WORK AREAS ON STRAIGHT ROADWAYS, THE FLAGGER MUST BE VISIBLE TO APPROACHING TRAFFIC FROM BOTH DIRECTIONS.
2. FOR OPERATIONS OF 60 MINUTES OR LESS, THE "ROAD WORK AHEAD" SIGN MAY BE OMITTED
3. FOR TWO-LANE, LOW - SPEED (35 MPH OR LESS) URBAN STREETS, A 200 FOOT SIGN SPACING MAY BE USED.
4. ALL WORK ZONE SIGNAGE SHALL CONFORM TO MUTCD AND NCDOT SPECIFICATIONS.

LANE CLOSURE ON A TWO-LANE LOW-VOLUME ROAD

(TWO FLAGGER OPERATION)

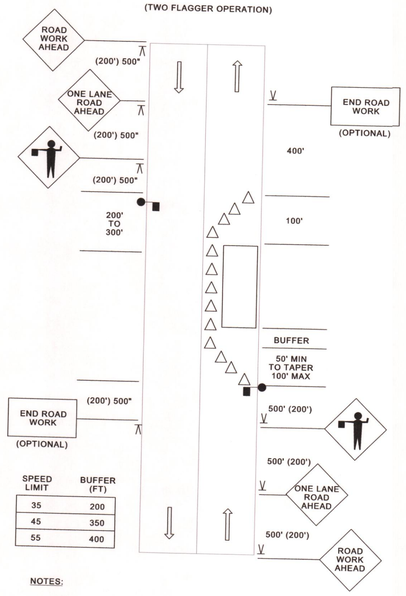

SPEED LIMIT	BUFFER (FT)
35	200
45	350
55	400

NOTES:

1. FOR OPERATIONS OF 60 MINUTES OR LESS, THE "ROAD WORK AHEAD" SIGN MAY BE OMITTED.
2. FOR TWO-LANE, LOW - SPEED (35 MPH OR LESS) URBAN STREETS, A 200 FOOT SIGN SPACING MAY BE USED.
3. GENERALLY, THE USE OF "END ROAD WORK" SIGNS IS OPTIONAL FOR SHORT DURATION WORK SITES. HOWEVER, IF THE WORK SITE, ITSELF, IS LONG, OR THE BEGINNING AND END OF THE WORK SITE ARE NOT VISIBLE TO A DRIVER PASSING THROUGH IT, THEN "END OF WORK" SIGNS SHOULD BE USED.
4. ALL WORK ZONE SIGNAGE SHALL CONFORM TO MUTCD AND NCDOT SPECIFICATIONS.

1 C.3.3 TRAFFIC CONTROL

NOT TO SCALE

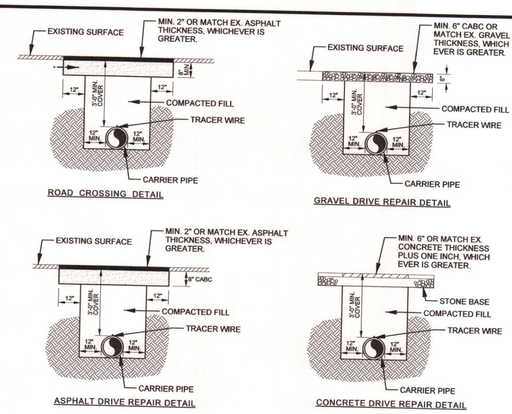

NOTE:
ALL OPEN CUTS ALONG SOIL ROADWAYS SHALL BE BACKFILLED WITH APPROVED SUITABLE MATERIAL AND PROPERLY TAMPED IN ACCORDANCE WITH SPECIFICATIONS.

2 C.3.3 TYPICAL TRENCH SURFACE REPAIR

NOT TO SCALE

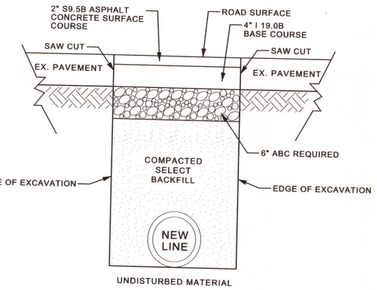

TYPICAL PAVEMENT REPAIR SECTION:

1. ALL SIDES OF REMOVED PAVEMENT SECTIONS SHALL BE SAW CUT TO FORM A CLEAN RECTANGLE OPENING.
2. SELECT FILL MATERIAL SHALL BE PLACED IN SIX INCHES (6") LIFTS ABOVE UNDISTURBED MATERIAL AT 100% OF MAXIMUM DENSITY UP TO TWELVE INCHES (12") BELOW TOP SURFACE OF OPENED PIT.
3. SIX INCHES (6") OF AGGREGATE BASE COURSE (ABC) MATERIAL SHALL BE PLACE OVER SELECTED FILL MATERIAL AND COMPACTED TO 100% OF MAXIMUM DENSITY.
4. HEATED TACK MATERIAL SHALL BE PLACED AROUND ALL SAW CUT PAVEMENT EDGES OF THE PIT JUST PRIOR TO PLACING THE I 19.0 B AND S 9.5 B ASPHALT MATERIAL TO INSURE BONDING.
5. ALL PAVEMENT PLACED FOUR INCHES (4") OF I 19.0 B AND TWO INCHES (2") OF S 9.5 B SHALL BE COMPACTED TO 92% OF MAXIMUM DENSITY.

NOTIFY NCDOT AT (252) 789-6150 BEFORE PITS ARE FILLED TO SCHEDULE AN INSPECTION.

3 C.3.3 NCDOT ROAD OPEN CUT DETAIL

NOT TO SCALE

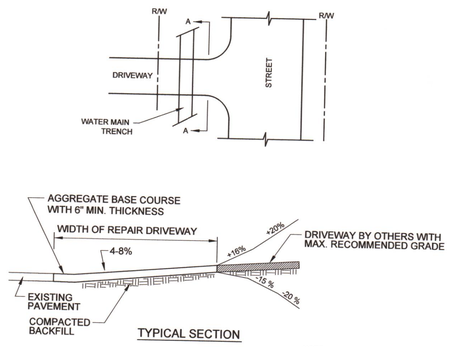

TYPICAL SECTION

NOTE:
1. FINISHED GRADE TO BE FLUSH WITH THE EDGE OF THE DRIVE.

4 C.3.3 STANDARD DRIVEWAY GRAVEL REPAIRS

NOT TO SCALE

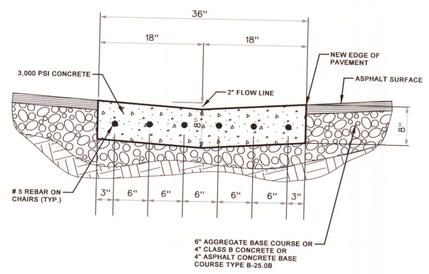

5 C.3.3 2'-6" CONCRETE VALLEY GUTTER

NOT TO SCALE

REVISIONS

THE WOOTEN COMPANY
ENGINEERING | PLANNING | ARCHITECTURE
301 West 14th Street Greenville, NC 27834
252.757.1096 fax 252.757.3221
License Number: F-0113

TOWN OF EDENTON
CHOWAN COUNTY
NORTH CAROLINA

FILBERT'S BRIDGE UTILITIES RELOCATION

GENERAL DETAILS

NORTH CAROLINA PROFESSIONAL SEAL 032240 ENGINEER SLADE HARVIN
10/8/2014

FINAL DRAWING
ISSUED FOR CONSTRUCTION
DATE: 1/27/2015

DESIGNED BY:	ASH
DRAWN BY:	DRS
CHECKED BY:	ASH
PROJECT NO.:	2478 - FL
DATE:	AUGUST 2014
SCALE:	AS NOTED

SHEET

C.3.3

Printer5.plt.plt
0.0842 " / " in.
dscargle
1/27/2015 4:31:28 PM
T:\Projects\Edenton-2478\FL\CADD\Sheets\SHTS2478-FL.dgn

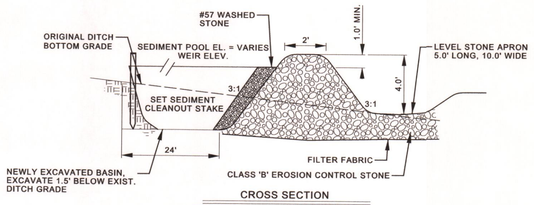

CROSS SECTION
(PROFILE VIEW OF ROADSIDE DITCH)

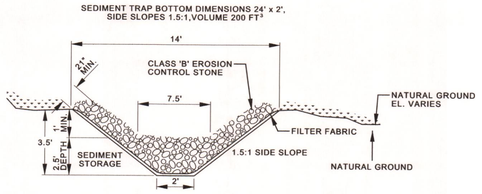

STONE SECTION
(AS SEEN LOOKING DOWN STREAM)

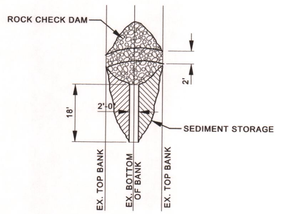

TST - TEMPORARY SEDIMENT TRAP DETAIL
TYPICAL FOR ROADSIDE DITCHES
NOT TO SCALE

NOTES:
1. CHECK BASIN AFTER EVERY RAINFALL WHICH CAUSES FLOW IN ROADSIDE DITCH.
2. REPLACE STONES WHICH ARE DISLODGED.
3. REPAIR ERODED ABUTMENTS WITH STONE.
4. WHEN BASIN IS 1/2 FULL CLEAN OUT SEDIMENT AND DISPOSE OF MATERIAL BY SPREADING AND SEEDING OR INCORPORATING INTO BACKFILLING OPERATIONS.
5. AFTER THE SITE IS STABILIZED, THE BASIN MUST BE REMOVED AND MATERIAL DISPOSED OF IN ACCORDANCE WITH THE SEDIMENT EROSION CONTROL POLLUTION ACT.
6. PAYMENT SHALL BE INCLUDED IN THE UNIT BID PRICE FOR OTHER ITEMS UNLESS SPECIFICALLY REQUESTED BY THE ENGINEER. SEE BASIS OF PAYMENT FOR PAYMENT TERMS.
7. ALL TEMPORARY SEDIMENT TRAPS SHOWN ON PLANS SHALL BE SIZED ACCORDING TO THIS DETAIL.

1 C.3.4 TEMPORARY SEDIMENT TRAP FOR ROADSIDE DITCHES
NOT TO SCALE

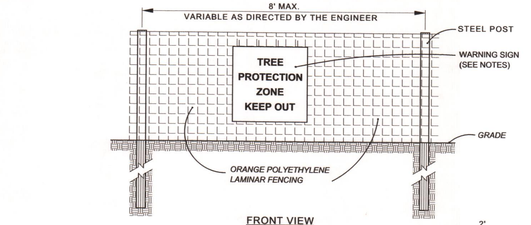

FRONT VIEW

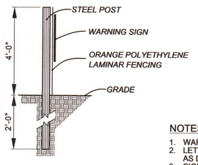

SIDE VIEW

WARNING SIGN

NOTES:
1. WARNING SIGNS TO BE MADE OF DURABLE, WEATHERPROOF MATERIAL.
2. LETTERS TO BE 3" HIGH MINIMUM, CLEARLY LEGIBLE AND SPACED AS DETAILED.
3. SIGNS SHALL BE PLACED AT 150' MAXIMUM INTERVALS.
4. PLACE A SIGN AT EACH END OF LINEAR TREE PROTECTION AND 150' ON CENTER THEREAFTER.
5. ATTACH SIGNS SECURELY TO FENCE POSTS AND FABRIC.
6. MAINTAIN TREE PROTECTION FENCE THROUGHOUT DURATION OF PROJECT.

2 C.3.4 TREE PROTECTION FENCE
NOT TO SCALE

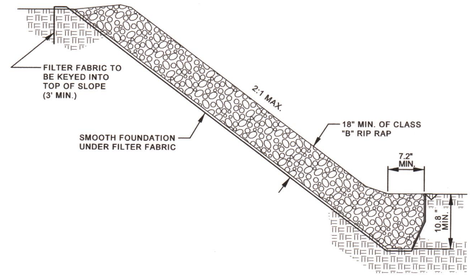

3 C.3.4 BANK STABILIZATION
NOT TO SCALE

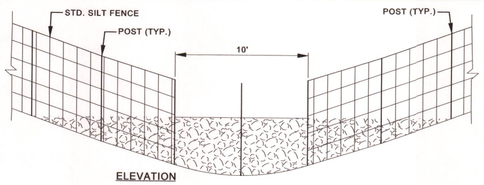

ELEVATION

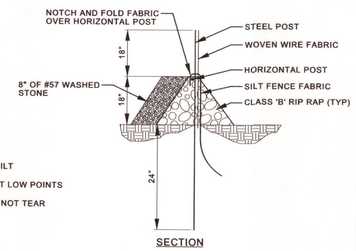

SECTION

NOTES:
1. INSTALL SILT FENCE PER STD. SILT FENCE DETAIL.
2. LOCATE REINFORCED OUTLET AT LOW POINTS OF SILT FENCE BARRIER.
3. PLACE RIP RAP WITH CARE. DO NOT TEAR SILT FENCE FABRIC.

4 C.3.4 REINFORCED SILT FENCE OUTLET
NOT TO SCALE

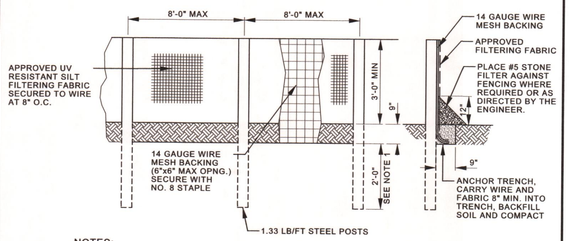

NOTES:
1. FOR AREAS OF EARTH BACKFILL, POSTS SHALL BE SET AT DEPTHS OF 4'-0" MIN. AND ANCHOR TRENCH IS TO BE 12"x12" WITH FILL TO BE COMPACTED.
2. PROVIDE ADEQUATE EXCAVATION AHEAD OF SILT FENCE TO ACT AS A VELOCITY BREAK AND SILT TRAP.
3. CONTRACTOR SHALL MAINTAIN AND REMOVE BUILT UP SEDIMENT ON FENCE AT PERIODIC INTERVALS OR AS DIRECTED BY INSPECTOR.
4. CONTRACTOR MAY USE ALTERNATE MATERIAL OR METHOD UPON APPROVAL FROM ENGINEER.

5 C.3.4 SILT FENCE
NOT TO SCALE

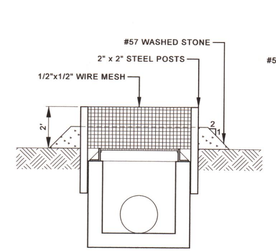

SECTION

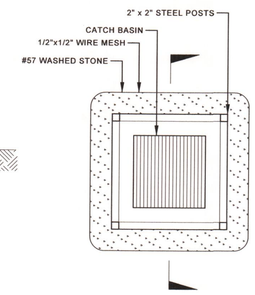

PLAN

NOTES:
1. DRIVE POSTS INTO THE GROUND TO A DEPTH OF 1.5'.
2. WIRE MESH SHALL BE HARDWARE CLOTH (23 GAUGE MIN.) AND SHALL HAVE 1/4" MESH OPENINGS. BURY FABRIC 1' AND EXTEND TO THE TOP OF THE POSTS.
3. SEDIMENT CONTROL STONE SHALL BE #57 STONE. HEIGHT OF STONE AT WIRE MESH SHALL BE 12 INCHES.
4. FASTEN FABRIC SECURELY AT THE CORNER POSTS.

6 C.3.4 INLET PROTECTION
NOT TO SCALE

FINAL DRAWING
ISSUED FOR CONSTRUCTION
DATE: 1/27/2015

REVISIONS

THE WOOTEN COMPANY
ENGINEERING | PLANNING | ARCHITECTURE
301 West 14th Street Greenville NC 27834
252.757.1096 fax 252.757.3221
License Number: F-0115

TOWN OF EDENTON
CHOWAN COUNTY
NORTH CAROLINA
FILBERT'S BRIDGE UTILITIES RELOCATION
SEDIMENTATION AND EROSION CONTROL DETAILS

NORTH CAROLINA PROFESSIONAL SEAL 032587 ENGINEER BLAKE HARVARD 10/8/2014

DESIGNED BY:	ASH
DRAWN BY:	DRS
CHECKED BY:	ASH
PROJECT NO.:	2478 - FL
DATE:	AUGUST 2014
SCALE:	AS NOTED

SHEET
C.3.4

C.3.4
Printer5.plt.plt
0.0842 ' / in.
dscorgle
1/27/2015 4:31:37 PM
T:\Projects\Edenton-2478\FL CADD\Sheets\SHTS2478-FL.dgn