09/08/99

TIP PROJECT: BD-5101P

CONTRACT: 7000013634

See Sheet 1-A For Index of Sheets
See Sheet 1-B For Conventional Symbols

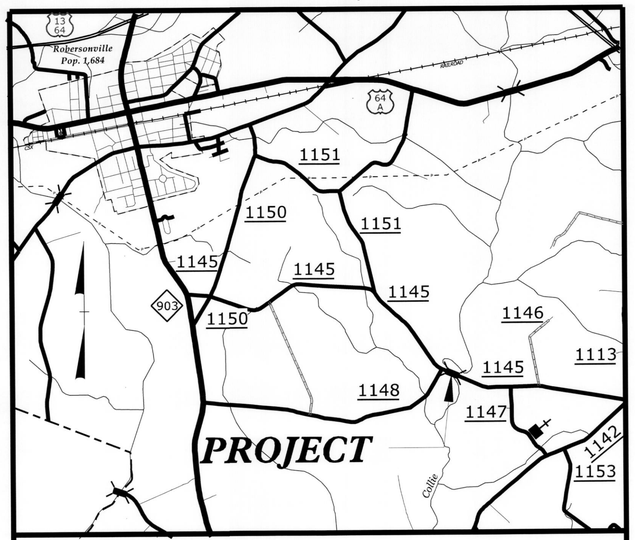

VICINITY MAP

STATE OF NORTH CAROLINA
DIVISION OF HIGHWAYS

MARTIN COUNTY

LOCATION: BRIDGE NO. 60 OVER COLLIE SWAMP ON SR 1145

TYPE OF WORK: GRADING, DRAINAGE, PAVING, AND STRUCTURES

STATE	STATE PROJECT REFERENCE NO.	SHEET NO.	TOTAL SHEETS
N.C.	BD-5101P	1	

STATE PROJ. NO.	F. A. PROJ. NO.	DESCRIPTION
~~45347.1.17~~	BRZ-1145(7)	P.E.
45347.1.FD17		

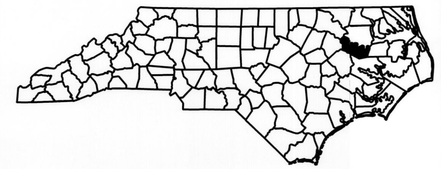

NC GRID
NAD 83/2011

4

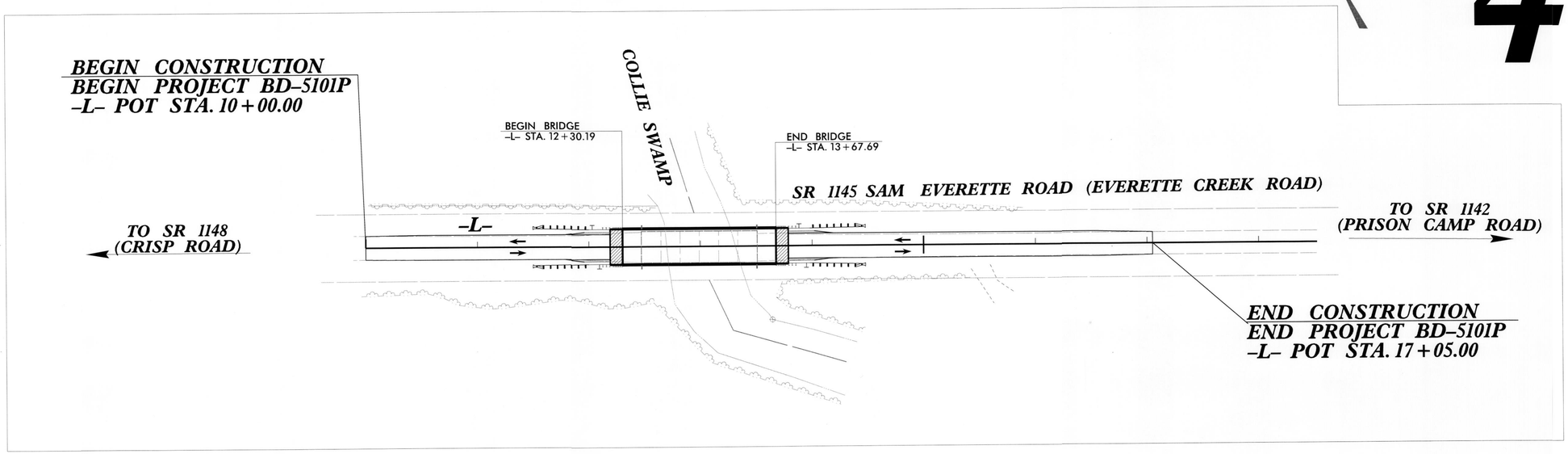

CLEARING ON THIS PROJECT SHALL BE PERFORMED TO THE LIMITS ESTABLISHED BY METHOD II MODIFIED. FIVE FEET BEYOND SLOPE LIMITS TO BE HAND CLEARED.

GRAPHIC SCALES

50 25 0 50 100
PLANS

50 25 0 50 100
PROFILE (HORIZONTAL)

10 5 0 10 20
PROFILE (VERTICAL)

PROJECT LENGTH

LENGTH ROADWAY TIP PROJECT BD-5101P	=	0.107 MILES
LENGTH STRUCTURE TIP PROJECT BD-5101P	=	0.026 MILES
TOTAL LENGTH TIP PROJECT BD-5101P	=	0.133 MILES

Prepared In the Office of:
CDM Smith
5400 Glenwood Ave., Suite 300, Raleigh, NC 27612

2012 STANDARD SPECIFICATIONS

RIGHT OF WAY DATE:
JUNE 1, 2013

LETTING DATE:
NOVEMBER 1, 2013

DOUGLAS B. SAUNDERS, PE
PROJECT ENGINEER

RICKY E. STATON
PROJECT DESIGN ENGINEER

HYDRAULICS ENGINEER

NORTH CAROLINA PROFESSIONAL SEAL 19669 ENGINEER JEROME J. BEARD

SIGNATURE: Jerome Beard P.E. 11/27/13

ROADWAY DESIGN ENGINEER

NORTH CAROLINA PROFESSIONAL SEAL 14160 ENGINEER DOUGLAS B. SAUNDERS

SIGNATURE: Douglas B. Saunders P.E. 11/27/13

DIVISION OF HIGHWAYS
STATE OF NORTH CAROLINA

STATE OF NORTH CAROLINA · DEPARTMENT OF TRANSPORTATION

P.E.
STATE HIGHWAY DESIGN ENGINEER

11/26/2013 11:53:00 AM
:::Proj\BD-5101P_RDY_TSH_01.dgn
USER: STATONRE

PROJECT REFERENCE NO.	SHEET NO.
BD-5101P	1-A
R/W SHEET NO.	

ROADWAY DESIGN ENGINEER

NORTH CAROLINA PROFESSIONAL SEAL 14160 ENGINEER DOUGLAS B. LAUNDERS

11/27/13

CDM Smith
Camp Dresser & McKee
5400 Glenwood Avenue
Suite 300
Raleigh, NC 27612-3228
NC COA No. F-0412

EFF. 07-18-06
REV. 01-02-07

INDEX OF SHEETS

SHEET NUMBER	TITLE
1	TITLE SHEET
1-A	INDEX OF SHEETS, GENERAL NOTES AND LIST OF STANDARDS
1-B	CONVENTIONAL SYMBOLS
2	TYPICAL SECTIONS AND PAVEMENT SCHEDULE
2-A THRU 2-B	STRUCTURE ANCHOR UNITS DETAIL
3-A	SUMMARY OF DRAINAGE QUANTITIES, SUMMARY OF GUARDRAIL, EARTHWORK SUMMARY
4	PLAN AND PROFILE SHEET
EC-1 THRU EC-3	EROSION CONTROL SHEETS
X-1	CROSS SECTION SUMMARY SHEET
X-2 THRU X-5	CROSS SECTIONS
S-1 THRU S-22	STRUCTURE PLANS

GENERAL NOTES

2012 SPECIFICATIONS

EFFECTIVE: 01-17-2012
REVISED: 07-30-2012

GRADING AND SURFACING OR RESURFACING AND WIDENING:

THE GRADE LINES SHOWN DENOTE THE FINISHED ELEVATION OF THE PROPOSED SURFACING AT GRADE POINTS SHOWN ON THE TYPICAL SECTIONS. WHERE NO GRADE LINES ARE SHOWN, THE PROFILES SHOWN DENOTE THE TOP ELEVATION OF THE EXISTING PAVEMENT ALONG THE CENTER LINE OF SURVEY ON WHICH THE PROPOSED RESURFACING WILL BE PLACED. GRADE LINES MAY BE ADJUSTED BY THE ENGINEER IN ORDER TO SECURE A PROPER TIE-IN.

CLEARING:

CLEARING ON THIS PROJECT SHALL BE PERFORMED TO THE LIMITS ESTABLISHED BY METHOD II.

SUPERELEVATION:

ALL CURVES ON THIS PROJECT SHALL BE SUPERELEVATED IN ACCORDANCE WITH STD. NO. 225.04 AND/OR STD. NO. 225.05 USING THE RATE OF SUPERELEVATION AND RUNOFF SHOWN ON THE PLANS. SUPERELEVATION IS TO BE REVOLVED ABOUT THE GRADE POINTS SHOWN ON THE TYPICAL SECTIONS.

SHOULDER CONSTRUCTION:

ASPHALT, EARTH, AND CONCRETE SHOULDER CONSTRUCTION ON THE HIGH SIDE OF SUPERELEVATED CURVES SHALL BE IN ACCORDANCE WITH STD. NO. 560.01 AND/OR STD. NO. 560.02

GUARDRAIL:

THE GUARDRAIL LOCATIONS SHOWN ON THE PLANS MAY BE ADJUSTED DURING CONSTRUCTION AS DIRECTED BY THE ENGINEER. THE CONTRACTOR SHOULD CONSULT WITH THE ENGINEER PRIOR TO ORDERING GUARDRAIL MATERIAL.

SUBSURFACE PLANS:

NO SUBSURFACE PLANS ARE AVAILABLE ON THIS PROJECT. THE CONTRACTOR SHOULD MAKE HIS OWN INVESTIGATION AS TO THE SUBSURFACE CONDITIONS.

END BENTS:

THE ENGINEER SHALL CHECK THE STRUCTURE END BENT PLANS, DETAILS, AND CROSS-SECTION PRIOR TO SETTING OF THE SLOPE STAKES FOR THE EMBANKMENT OR EXCAVATION APPROACHING A BRIDGE.

RIGHT-OF-WAY MARKERS:

ALL RIGHT-OF-WAY MARKERS ON THIS PROJECT SHALL BE PLACED BY OTHERS.

STANDARD DRAWINGS

REV. 10-30-2012

2012 ROADWAY ENGLISH STANDARD DRAWINGS

The following Roadway Standards as appear in "Roadway Standard Drawings" Highway Design Branch – N. C. Department of Transportation – Raleigh, N. C., Dated January, 2012 are applicable to this project and by reference hereby are considered a part of these plans:

STD.NO.	TITLE
DIVISION 2 – EARTHWORK	
200.02	Method of Clearing – Method II
225.02	Guide for Grading Subgrade – Secondary and Local
225.04	Method of Obtaining Superelevation – Two Lane Pavement
DIVISION 3 – PIPE CULVERTS	
300.01	Method of Pipe Installation
DIVISION 4 – MAJOR STRUCTURES	
422.11	Reinforced Bridge Approach Fills – Sub Regional Tier
DIVISION 5 – SUBGRADE, BASES AND SHOULDERS	
560.01	Method of Shoulder Construction – High Side of Superelevated Curve – Method I
DIVISION 6 – ASPHALT BASES AND PAVEMENTS	
654.01	Pavement Repairs
DIVISION 8 – INCIDENTALS	
840.36	Traffic Bearing Grated Drop Inlet – for Steel (840.37) Double Frame and Grates
840.37	Steel Grate and Frame
840.46	Traffic Bearing Precast Drainage Structure
846.04	Drop Inlet Installation in Shoulder Berm Gutter
862.01	Guardrail Placement
862.02	Guardrail Installation
862.03	Structure Anchor Units (Beg. March 2013 Letting use detail in lieu of Standard)
876.02	Guide for Rip Rap at Pipe Outlets
DIVISION 11 – WORK ZONE TRAFFIC CONTROL	
1101.01	Work Zone Advance Warning Signs
1101.02	Temporary Lane Closures
1101.03	Temporary Road Closures
1101.11	Traffic Control Design Tables
1110.01	Stationary Work Zone Signs
1130.01	Drum
1135.01	Cones
1145.01	Barricades
1150.01	Flagging Devices

5/14/99
12/2/2013 1:58:52 PM
USER:cbrown
cdhs-c01\bd-5101p_RDY_PSH_01A.dgn

PROJECT REFERENCE NO.	SHEET NO.
BD-5101P	1-B

Note: Not to Scale

**S.U.E. = Subsurface Utility Engineering*

STATE OF NORTH CAROLINA
DIVISION OF HIGHWAYS

CONVENTIONAL PLAN SHEET SYMBOLS

BOUNDARIES AND PROPERTY:

- State Line
- County Line
- Township Line
- City Line
- Reservation Line
- Property Line
- Existing Iron Pin — EIP
- Property Corner
- Property Monument — ECM
- Parcel/Sequence Number — 123
- Existing Fence Line
- Proposed Woven Wire Fence
- Proposed Chain Link Fence
- Proposed Barbed Wire Fence
- Existing Wetland Boundary — WLB
- Proposed Wetland Boundary — WLB
- Existing Endangered Animal Boundary — EAB
- Existing Endangered Plant Boundary — EPB
- Known Soil Contamination: Area or Site
- Potential Soil Contamination: Area or Site

BUILDINGS AND OTHER CULTURE:

- Gas Pump Vent or U/G Tank Cap
- Sign — S
- Well — W
- Small Mine
- Foundation
- Area Outline
- Cemetery
- Building
- School
- Church
- Dam

HYDROLOGY:

- Stream or Body of Water
- Hydro, Pool or Reservoir
- Jurisdictional Stream — JS
- Buffer Zone 1 — BZ 1
- Buffer Zone 2 — BZ 2
- Flow Arrow
- Disappearing Stream
- Spring
- Wetland
- Proposed Lateral, Tail, Head Ditch — FLOW
- False Sump

RAILROADS:

- Standard Gauge — CSX TRANSPORTATION
- RR Signal Milepost — MILEPOST 35
- Switch — SWITCH
- RR Abandoned
- RR Dismantled

RIGHT OF WAY:

- Baseline Control Point
- Existing Right of Way Marker
- Existing Right of Way Line
- Proposed Right of Way Line — RW
- Proposed Right of Way Line with Iron Pin and Cap Marker — RW
- Proposed Right of Way Line with Concrete or Granite R/W Marker — RW
- Proposed Control of Access Line with Concrete C/A Marker — CA
- Existing Control of Access — CA
- Proposed Control of Access — CA
- Existing Easement Line — E
- Proposed Temporary Construction Easement — E
- Proposed Temporary Drainage Easement — TDE
- Proposed Permanent Drainage Easement — PDE
- Proposed Permanent Drainage / Utility Easement — DUE
- Proposed Permanent Utility Easement — PUE
- Proposed Temporary Utility Easement — TUE
- Proposed Aerial Utility Easement — AUE
- Proposed Permanent Easement with Iron Pin and Cap Marker

ROADS AND RELATED FEATURES:

- Existing Edge of Pavement
- Existing Curb
- Proposed Slope Stakes Cut — C
- Proposed Slope Stakes Fill — F
- Proposed Curb Ramp — CR
- Existing Metal Guardrail
- Proposed Guardrail
- Existing Cable Guiderail
- Proposed Cable Guiderail
- Equality Symbol
- Pavement Removal

VEGETATION:

- Single Tree
- Single Shrub
- Hedge
- Woods Line
- Orchard
- Vineyard — Vineyard

EXISTING STRUCTURES:

MAJOR:

- Bridge, Tunnel or Box Culvert — CONC
- Bridge Wing Wall, Head Wall and End Wall — CONC WW

MINOR:

- Head and End Wall — CONC HW
- Pipe Culvert
- Footbridge
- Drainage Box: Catch Basin, DI or JB — CB
- Paved Ditch Gutter
- Storm Sewer Manhole — S
- Storm Sewer — S

UTILITIES:

POWER:

- Existing Power Pole
- Proposed Power Pole
- Existing Joint Use Pole
- Proposed Joint Use Pole
- Power Manhole — P
- Power Line Tower
- Power Transformer
- U/G Power Cable Hand Hole
- H-Frame Pole
- Recorded U/G Power Line — P
- Designated U/G Power Line (S.U.E.*) — P

TELEPHONE:

- Existing Telephone Pole
- Proposed Telephone Pole
- Telephone Manhole — T
- Telephone Booth
- Telephone Pedestal — T
- Telephone Cell Tower
- U/G Telephone Cable Hand Hole — HH
- Recorded U/G Telephone Cable — T
- Designated U/G Telephone Cable (S.U.E.*) — T
- Recorded U/G Telephone Conduit — TC
- Designated U/G Telephone Conduit (S.U.E.*) — TC
- Recorded U/G Fiber Optics Cable — T FO
- Designated U/G Fiber Optics Cable (S.U.E.*) — T FO

WATER:

- Water Manhole — W
- Water Meter
- Water Valve
- Water Hydrant
- Recorded U/G Water Line
- Designated U/G Water Line (S.U.E.*)
- Above Ground Water Line — A/G Water

TV:

- TV Satellite Dish
- TV Pedestal — C
- TV Tower
- U/G TV Cable Hand Hole — HH
- Recorded U/G TV Cable — TV
- Designated U/G TV Cable (S.U.E.*) — TV
- Recorded U/G Fiber Optic Cable — TV FO
- Designated U/G Fiber Optic Cable (S.U.E.*) — TV FO

GAS:

- Gas Valve
- Gas Meter
- Recorded U/G Gas Line — G
- Designated U/G Gas Line (S.U.E.*) — G
- Above Ground Gas Line — A/G Gas

SANITARY SEWER:

- Sanitary Sewer Manhole
- Sanitary Sewer Cleanout
- U/G Sanitary Sewer Line — SS
- Above Ground Sanitary Sewer — A/G Sanitary Sewer
- Recorded SS Forced Main Line — FSS
- Designated SS Forced Main Line (S.U.E.*) — FSS

MISCELLANEOUS:

- Utility Pole
- Utility Pole with Base
- Utility Located Object
- Utility Traffic Signal Box — S
- Utility Unknown U/G Line — ?UTL
- U/G Tank; Water, Gas, Oil
- Underground Storage Tank, Approx. Loc. — UST
- A/G Tank; Water, Gas, Oil
- Geoenvironmental Boring
- U/G Test Hole (S.U.E.*)
- Abandoned According to Utility Records — AATUR
- End of Information — E.O.I.

12/05/11

12/2/2013 1:58:56 PM
T:\ROADWAY\BD5101P_RDY_PSH_01B.dgn
USER: STATONRE

PROJECT REFERENCE NO.	SHEET NO.
BD-5101P	2
ROADWAY DESIGN ENGINEER	PAVEMENT DESIGN ENGINEER

NORTH CAROLINA PROFESSIONAL SEAL 14160 ENGINEER DOUGLAS E. ANDERS

Douglas E. Anders 11/27/13

CDM Smith — Camp Dresser & McKee, 5400 Glenwood Avenue, Suite 300, Raleigh, NC 27612-3228, NC COA No. F-0412

NC DEPARTMENT OF TRANSPORTATION, PAVEMENT MANAGEMENT UNIT, 1593 MAIL SERVICE CENTER, RALEIGH, NC 27699-1593

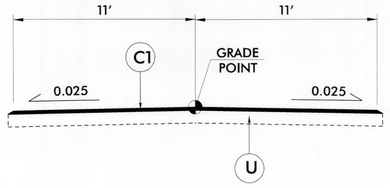

TYPICAL SECTION NO. 1

USE TYPICAL SECTION NO. 1
-L- Sta. 10+00.00 TO Sta. 10+90.00
-L- Sta. 16+30.00 TO Sta. 17+05.00

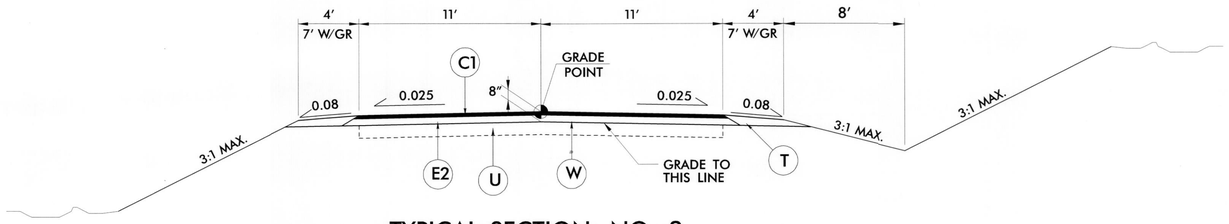

TYPICAL SECTION NO. 2

USE TYPICAL SECTION NO. 2
-L- Sta. 10+90.00 TO Sta. 11+85.00
-L- Sta. 15+55.00 TO Sta. 16+30.00

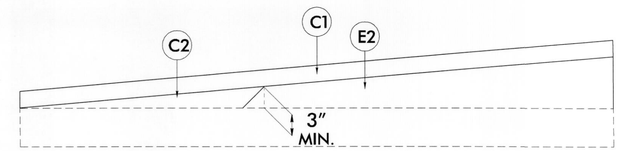

WEDGING DETAIL FOR RESURFACING

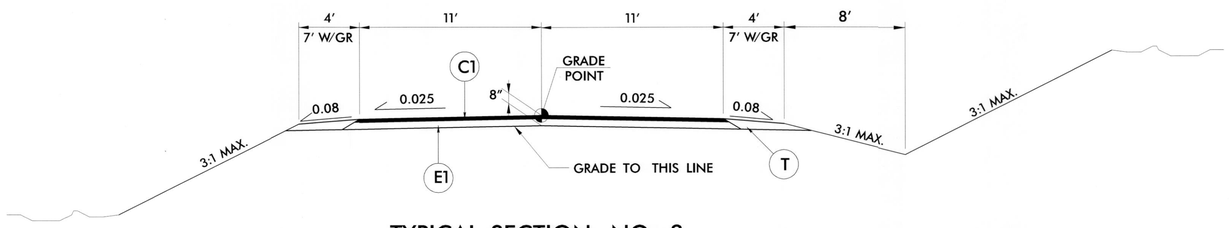

TYPICAL SECTION NO. 3

USE TYPICAL SECTION NO. 3
-L- Sta. 11+85.00 TO Sta. 12+30.19 (BEGIN BRIDGE)
-L- Sta. 13+67.69 (END BRIDGE) TO Sta. 15+55.00

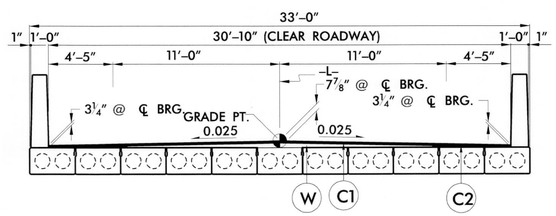

TYPICAL SECTION ON STRUCTURE

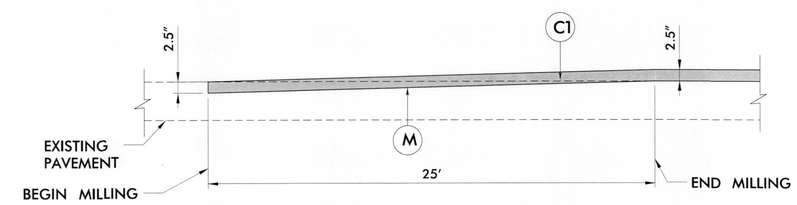

MILLING DETAIL (VIEW ALONG ROAD ℄)

NOT TO SCALE

NOTE: END MILLING WHERE PROPOSED GRADE IS 2.5" ABOVVE EXISTING PAVEMENT

PAVEMENT SCHEDULE

ITEM	DESCRIPTION	ITEM	DESCRIPTION	ITEM	DESCRIPTION
C1	PROPOSED APPROXIMATE 2.5 IN. ASPHALT SURFACE COURSE, TYPE SF9.5A, AT AN AVERAGE RATE OF 137.50 LBS/SY.	M	MILLING (SEE MILLING DETAIL ABOVE)		
C2	PROP. VAR. DEPTH ASPHALT CONC. SURFACE COURSE, TYPE SF9.5A, AT AN AVERAGE RATE OF 110 LBS/SY/IN. IN LIFTS NOT LESS THAN 1.0 IN. NOR GREATER THAN 1.5 IN.	U	EXISTING PAVEMENT		
E1	PROP. APPROX. 5.5 IN. ASPHALT BASE COURSE, TYPE B25.0B, AT AN AVERAGE RATE OF 627 LBS/SY.	W	WEDGING (SEE WEDGE DETAIL ABOVE)		
E2	PROP. VAR. DEPTH ASPHALT BASE COURSE, TYPE B25.0B, AT AN AVERAGE RATE OF 114 LBS/SY/IN IN LIFTS NOT LESS THAN 3 IN. NOR GREATER THAN 5.5 IN.				
T	EARTH MATERIAL				

NOTES :

PAVEMENT EDGES ARE 1:1 UNLESS OTHERWISE NOTED.

6/2/99
12/2/2013 1:59:00 PM
s:\roadway\bd5101p\rdy_typ_02.dgn
USER: SCARLONE

12/2/2013 3:29:25 PM
\Proj\BD-5101P_RDY_PSH_2A-B.dgn
USER: STATONRE

STATE OF NORTH CAROLINA
DEPT. OF TRANSPORTATION
DIVISION OF HIGHWAYS
RALEIGH, N.C.

ENGLISH DETAIL DRAWING FOR
STRUCTURE ANCHOR UNITS
GUARDRAIL ANCHOR UNIT, TYPE III FOR ATTACHMENT TO RAIL ON BRIDGE - SUB REGIONAL TIER

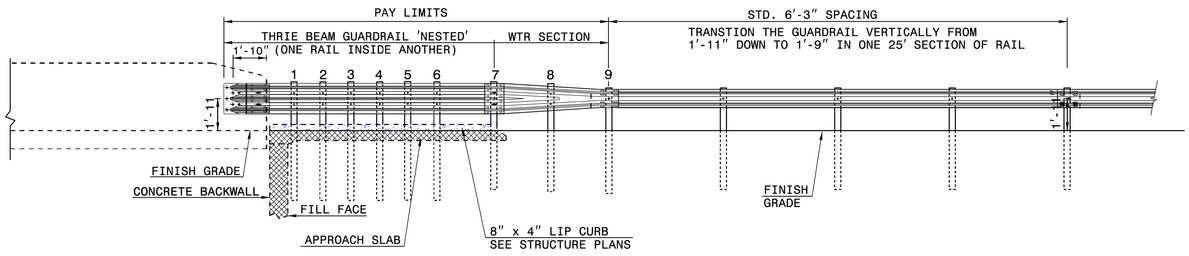

ELEVATION

NOTE:
**POST NOT REQUIRED FOR SKEW ANGLES GREATER THAN 150° OR LESS THAN 30° UNLESS OTHERWISE DIRECTED BY THE ENGINEER.
*THE DISTANCE FROM END OF BRIDGE RAIL TO CENTER LINE OF THE FIRST POST SHOULD BE 11½" IF CONCRETE BACKWALL IS NOT PRESENT.
-SHOULDER BERM GUTTER MUST BE INSTALLED TO THE LIMITS 8" x 4" LIP CURB IS SHOWN IF ANCHOR UNIT IS NOT ADJACENT TO AN APPROACH SLAB.
-MEASURE GUARDRAIL HEIGHT FROM THE TOP OF ADJACENT SURFACE (SHOULDER, BERM, OR GUTTER).
-LAP JOINTS IN THE DIRECTION OF TRAFFIC FLOW.
-SEE SHEET 5 FOR POST SECTIONS 1 THRU 9.

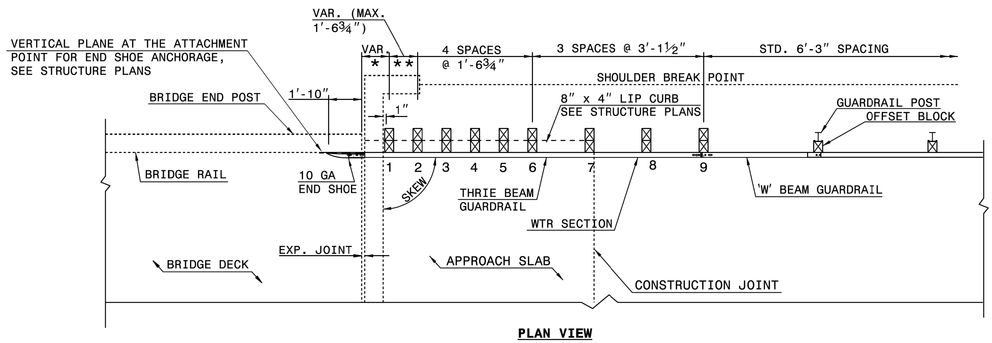

PLAN VIEW

GUARDRAIL ANCHOR UNIT, TYPE III FOR ATTACHMENT TO RAIL ON BRIDGE - SUB REGIONAL TIER

SHEET 2 OF 7
862d03

STATE OF NORTH CAROLINA
DEPT. OF TRANSPORTATION
DIVISION OF HIGHWAYS
RALEIGH, N.C.

ENGLISH DETAIL DRAWING FOR
STRUCTURE ANCHOR UNITS
GUARDRAIL ANCHOR UNIT, TYPE III FOR ATTACHMENT TO RAIL ON BRIDGE - SUB REGIONAL TIER

SHEET 2 OF 7
862d03

STATE OF NORTH CAROLINA
DEPT. OF TRANSPORTATION
DIVISION OF HIGHWAYS
RALEIGH, N.C.

ENGLISH DETAIL DRAWING FOR
STRUCTURE ANCHOR UNITS
GUARDRAIL ANCHOR UNIT, TYPE III

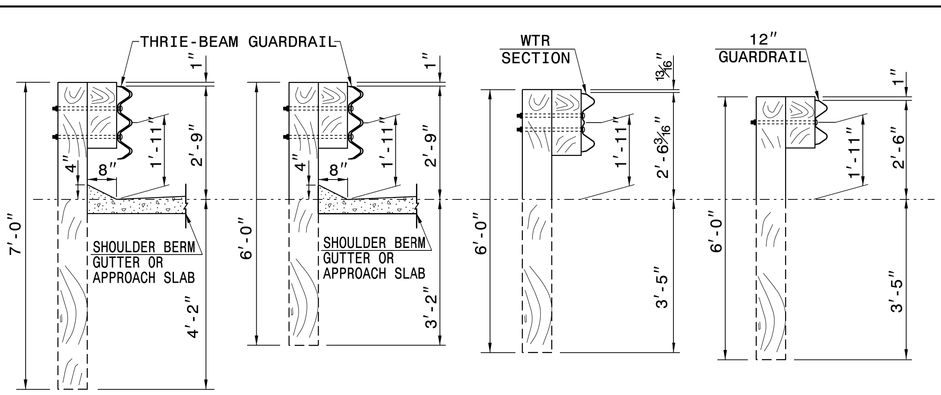

SECTION OF THRIE BEAM POSTS 1 THRU 6

SECTION OF THRIE BEAM POST 7

SECTION OF WTR BEAM POST 8

SECTION OF 'W' BEAM POST 9

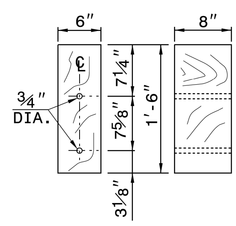

THRIE BEAM OFFSET BLOCK

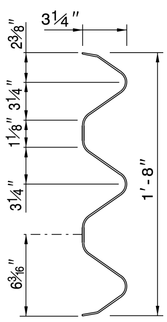

THRIE-BEAM SECTION

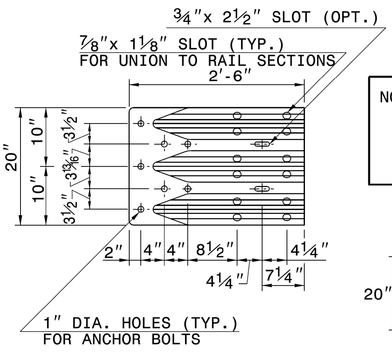

END SHOE

NOTE: THE MID POST AND OFFSET BLOCK OF THE WTR SECTION WILL REQUIRE SPECIAL BOLT HOLE DRILLING IN THE THRIE BEAM OFFSET BLOCK AND LINE POST.

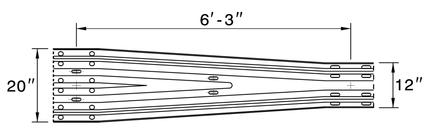

WTR SECTION
ELEVATION VIEW

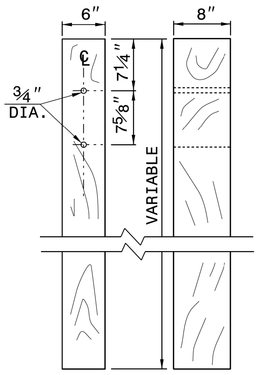

THRIE BEAM LINE POST

SHEET 3 OF 7
862d03

STATE OF NORTH CAROLINA
DEPT. OF TRANSPORTATION
DIVISION OF HIGHWAYS
RALEIGH, N.C.

ENGLISH DETAIL DRAWING FOR
STRUCTURE ANCHOR UNITS
GUARDRAIL ANCHOR UNIT, TYPE III

SHEET 3 OF 7
862d03

ORIGINAL BY: J. HOWERTON DATE: 06-22-12
MODIFIED BY: DATE:
CHECKED BY: DATE:
FILE SPEC.:

SEE TITLE BLOCK

CONTRACT STANDARDS AND DEVELOPMENT UNIT
Office 919-707-6950 FAX 919-250-4119

PROJECT REFERENCE NO. BD-5101P
SHEET NO. 2-A

PROJECT REFERENCE NO.	SHEET NO.
BD-510P	2-8

CONTRACT STANDARDS AND DEVELOPMENT UNIT
Office 919-707-6950 FAX 919-250-4119

SEE TITLE BLOCK

ORIGINAL BY: J HOWERTON DATE: 06-22-12
MODIFIED BY: DATE:
CHECKED BY: DATE:
FILE SPEC.:

STATE OF NORTH CAROLINA
DEPT. OF TRANSPORTATION
DIVISION OF HIGHWAYS
RALEIGH, N.C.

ENGLISH DETAIL DRAWING FOR
GUARDRAIL ANCHOR UNIT
GUARDRAIL ANCHOR UNIT TYPE B-77
FOR F-SHAPE BARRIER

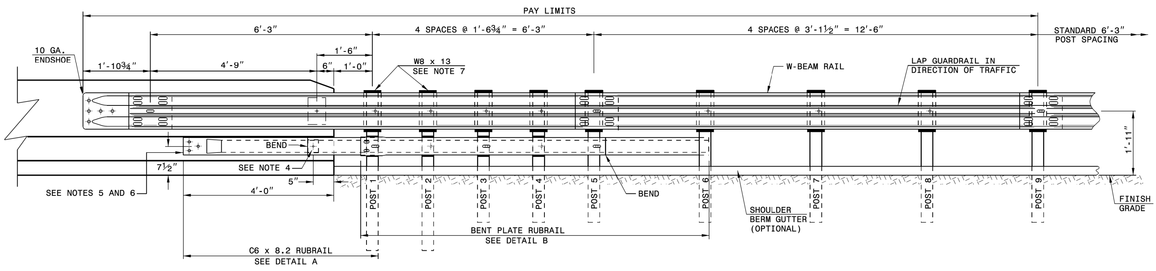

ELEVATION

GENERAL NOTES:
1) POSTS 1 THROUGH 5 REQUIRE AN ADDITIONAL HOLE TO ATTACH LOWER BLOCKOUTS AND/OR RUBRAIL.
2) RUBRAIL BLOCKOUTS LOCATED ON POSTS 1 THROUGH 4 ARE OFFSET DRILLED AND SECURED WITH ⅝" BUTTONHEAD BOLTS (SEE CHART FOR BOLT LENGTHS). SECURE BLOCKS ONLY TO POSTS 2 AND 4. SECURE RUBRAIL AND BLOCKOUTS TO POSTS 1 AND 3. RUBRAIL IS SECURED TO POST 5 WITH A ⅝" x 4½" BUTTONHEAD BOLT. RUBRAIL IS FLARED TO BACK OF POST 6 AND NOT SECURED.
3) STEEL SPACER TUBE IS A SCHEDULE 40 GALVANIZED PIPE 6" INSIDE DIAMETER x 9" LONG. ATTACH TUBE TO GUARDRAIL ONLY WITH ⅝" x 1¼" LONG BUTTONHEAD BOLT AND RECTANGULAR PLATE WASHER.
4) SEE DETAIL D FOR SLOPED RUBRAIL BLOCKOUT. BLOCKOUT IS ATTACHED TO RAIL ELEMENT ONLY. USE ⅜" x 3" LAG BOLT WITH FLAT WASHER.
5) SHOP FABRICATE THE C6 x 8.2 RUBRAIL END TO BE CONSISTENT WITH THE SLOPE OF THE F SHAPE AND ATTACH FLUSH WITH THE SLOPED TOE OF THE BARRIER OR BRIDGE RAIL.
6) ANCHORAGE:
   (a) AT EXISTING BRIDGE RAIL AND NEW OR EXISTING BARRIERS, ANCHOR RUBRAIL USING THREE ⅝" x 6" CHEMICALLY ANCHORED BOLTS WITH WASHERS. MAXIMUM PROJECTION FOR BOLTS IS ½".
   (b) AT EXISTING BRIDGE RAIL AND NEW OR EXISTING BARRIERS, ANCHOR THE W-BEAM END SHOE USING A 4 BOLT HOLD DOWN PLATE (SEE STD. DWG. 862.04). A 4 BOLT INSERT ASSEMBLY IS ALLOWED ON PRECAST REINFORCED CONCRETE BARRIER (SEE STD. DWG. 857.01). INSTALL THE W-BEAM END SHOE BEHIND THE NESTED W-BEAM ELEMENTS.
   (c) AT NEW BRIDGE RAIL, ANCHOR THE W-BEAM END SHOE AND RUBRAIL AS DETAILED ON THE STRUCTURE PLANS.
7) POSTS 1 AND 2 ARE W8 x 13, 7'-6" LONG. ALL OTHER POSTS IN THE ANCHOR UNIT ARE W6 x 8.5.

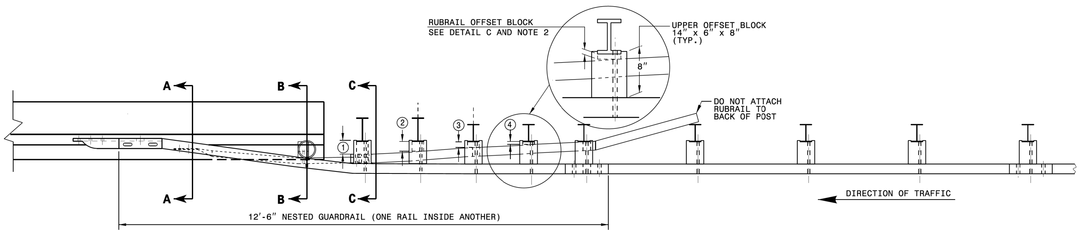

PLAN

GUARDRAIL ANCHOR UNIT TYPE B-77

SHEET 4 OF 7
862D03

STATE OF NORTH CAROLINA
DEPT. OF TRANSPORTATION
DIVISION OF HIGHWAYS
RALEIGH, N.C.

ENGLISH DETAIL DRAWING FOR
STRUCTURE ANCHOR UNIT
GUARDRAIL ANCHOR UNIT TYPE B-77
FOR F-SHAPE BARRIER

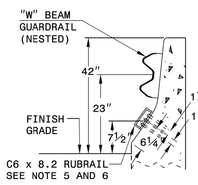

SECTION A-A

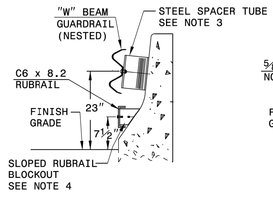

SECTION B-B

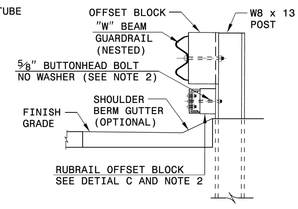

SECTION C-C

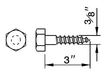

DETAIL E
LAG BOLT

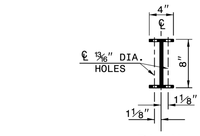

PLAN

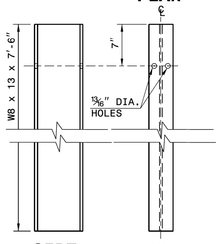

SIDE FRONT
DETAIL F STEEL POST
"W8 X 13 X 7'-6"

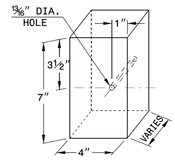

DETAIL C
RUBRAIL BLOCKOUT

RUBRAIL BLOCKS 7" HIGH x 4" WIDE		
POST	THICKNESS	BOLT LENGTH
1	4¼"	9"
2	3¼"	5" *
3	2"	6"
4	1"	3" *

* BOLTS FOR POSTS 2 AND 4 ARE USED TO ATTACH BLOCK TO POST. RUBRAIL NOT ATTACHED TO BLOCK.

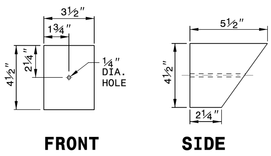

FRONT SIDE
DETAIL D
SLOPED RUBRAIL BLOCKOUT

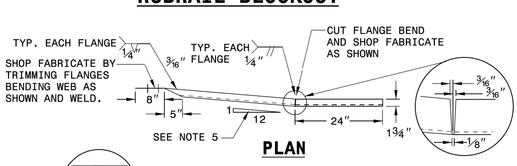

PLAN

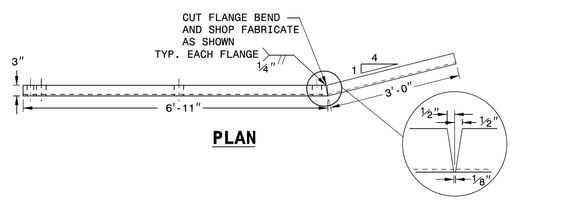

PLAN

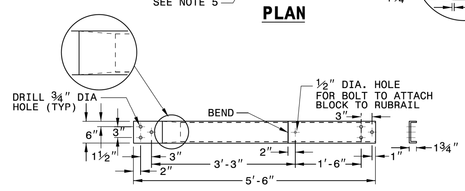

ELEVATION
DETAIL A
C6 x 8.2 RUBRAIL

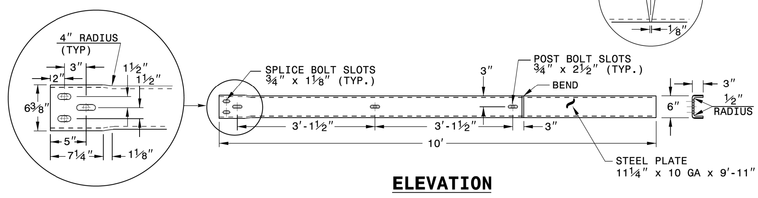

ELEVATION
DETAIL B
BENT PLATE RUBRAIL

GUARDRAIL ANCHOR UNIT TYPE B-77

SHEET 5 OF 7
862D03

STATE OF NORTH CAROLINA
DEPT. OF TRANSPORTATION
DIVISION OF HIGHWAYS
RALEIGH, N.C.

ENGLISH DETAIL DRAWING FOR
STRUCTURE ANCHOR UNIT
GUARDRAIL ANCHOR UNIT TYPE B-77
FOR F-SHAPE BARRIER

12/2/2013 2:03:01 PM
U:\Pro\BD-510P-HDY-PSH-2A-B.dgn
USER: STATONHE

COMPUTED BY: R. STATON DATE: 10-22-2013
CHECKED BY: D. SAUNDERS DATE: 11-2013

PROJECT REFERENCE NO.	SHEET NO.
BD-5101P	3-A

STATE OF NORTH CAROLINA
DIVISION OF HIGHWAYS
LIST OF PIPES, ENDWALLS, ETC. (FOR PIPES 48" & UNDER)

| STATION | LOCATION (LT, RT, OR CL) | STRUCTURE NO. FROM | STRUCTURE NO. TO | TOP ELEVATION | INVERT ELEVATION | INVERT ELEVATION | SLOPE CRITICAL | SIDE DRAIN PIPE (RCP, CSP, CAAP, HDPE, or PVC) 12" | 15" | 18" | 24" | 30" | 36" | 42" | 48" | DO NOT USE RCP | DO NOT USE CSP | DO NOT USE CAAP | DO NOT USE HDPE | C.S. PIPE 12" | 15" | 18" | 24" | 30" | 36" | 42" | 48" | R.C. PIPE CLASS III 12" | 15" | 18" | 24" | 30" | 36" | 42" | 48" | R.C. PIPE CLASS IV 12" | 15" | 18" | 24" | 30" | 36" | 42" | 48" | 48" WELDED STEEL (0.625" THICK) TRENCHLESS INSTALLATION | 36" WELDED STEEL (0.625" THICK) TRENCHLESS INSTALLATION | **** RC PIPE CULVERTS, CONTRACTOR DESIGN | 15" SIDE DRAIN PIPE | 18" SIDE DRAIN PIPE | ENDWALLS STD. 838.01 OR STD. 838.11 (UNLESS NOTED OTHERWISE) CU. YARDS R.C.P. | C.S.P. | QUANTITIES FOR DRAINAGE STRUCTURES. *TOTAL L.F. FOR PAY QUANTITY SHALL BE COL. "A" + (1.3 X COL. "B") LIN. FT. A | B | PER EACH (0' THRU 5.0') | 5.0' THRU 10.0' | 10.0' AND ABOVE | C.B. STD. 840.01 OR STD. 840.02 | FRAME, GRATES, AND HOOD STANDARD 840.03 TYPE OF GRATE E | F | G | CONCRETE TRANSITIONAL SECTION DROP INLET | CATCH BASIN | D.I. STD. 840.14 OR STD. 840.15 | D.I. FRAME AND GRATE STD. 840.16 | D.I. FRAME AND GRATE STD. 840.17 OR 840.26 | G.D.I. TYPE "A" STD. 840.17 OR 840.26 | G.D.I. TYPE "B" STD. 840.18 OR 840.27 | G.D.I. TYPE "D" STD. 840.19 OR 840.28 | G.D.I. FRAME WITH TWO GRATES STD. 840.20 | G.D.I. FRAME WITH TWO GRATES STD. 840.22 | G.D.I. (N.S.) FRAME WITH GRATE STD. 840.24 | G.D.I. (N.S.) FRAME WITH TWO GRATES STD. 840.24 | J.B. STD. 840.31 OR 840.32 | T.B.J.D. STD. 840.34 | T.B.J.D. STD. 840.46 | M.H. FRAME AND COVER STD. 840.54 | PARALLEL PIPE END SECTION STD. 310.02 | OPEN THROAT CATCH BASIN STD. 840.04 OR 840.05 | SPING BOX STD. 540.41 | DRY DETENTION OUTLET CONTROL STR. SHEETS 2-BC AND 2-BE | | | CONVERT TO M.H. | ADJUST C.B/M.H. | CONVERT TO C.B. | SIDE DRAIN PIPE ELBOWS NO. & SIZE | CONC. & BRICK PIPE PLUG, C.Y. STD. 840.71 | CONC. COLLARS CL. "B" C.Y. STD. 840.72 | PIPE REMOVAL LIN. FT. | REMARKS |
|---|---|---

PROJECT REFERENCE NO.	SHEET NO.
BD-5101P	4
R/W SHEET NO.	

ROADWAY DESIGN ENGINEER

HYDRAULICS ENGINEER

CDM Smith — Camp Dresser & McKee, 5400 Glenwood Avenue, Suite 300, Raleigh, NC 27612-3228, NC CDA No. F-0412

MI Engineering, PLLC, 1011 Schaub Drive, Suite 100, Raleigh, NC 27606, NC CDA No.

DATUM DESCRIPTION

THE LOCALIZED COORDINATE SYSTEM DEVELOPED FOR THIS PROJECT IS BASED ON THE STATE PLANE COORDINATES ESTABLISHED BY NCDOT FOR MONUMENT "BD51011"
WITH NAD 83 (2011) STATE PLANE GRID COORDINATES OF NORTHING: 748591.874(ft) EASTING: 2531432.677(ft)
ELEVATION: 35.71(ft)
THE AVERAGE COMBINED GRID FACTOR USED ON THIS PROJECT (GROUND TO GRID) IS: 0.999921113
THE N.C. LAMBERT GRID BEARING AND LOCALIZED HORIZONTAL GROUND DISTANCE FROM "BD51011" TO -L- STATION IS

ALL LINEAR DIMENSIONS ARE LOCALIZED HORIZONTAL DISTANCES
VERTICAL DATUM USED IS NAVD 88

RIGHT OF WAY AREA DATA

PARCEL NUMBER	PROPERTY OWNERS NAMES	TOTAL AREA	AREA TAKEN	AREA REMAINING	CONST. EASEMENT	PERMENANT DRAINAGE EASEMENT	TEMPORARY DRAINAGE EASEMENT
1	FOREST R. BOONE	39.210 Ac.	0.101 Ac.	39.109 Ac.			
2	H.H.WILLIAMS HEIRS	118.900 Ac.	0.278 Ac.	118.622 Ac.			
3	LILLIAN JAMES & SONS	235.510 Ac.	0.137 Ac.	235.373 Ac.			

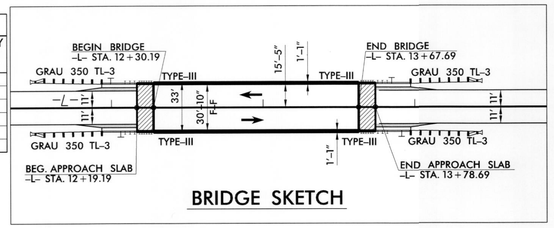

BRIDGE SKETCH

NC GRID NAD 83/2011

REVISIONS

△8-20-13 REVISED ROW AT END BENT 1 FOR PARCEL 3

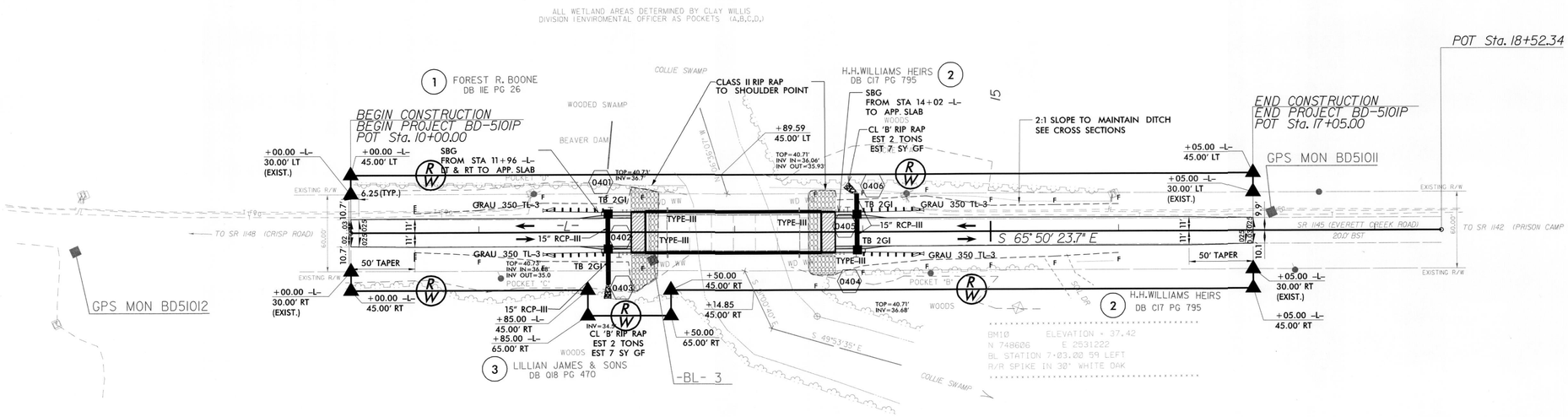

BRIDGE HYDRAULIC DATA

DESIGN DISCHARGE	= 2,420	CFS
DESIGN FREQUENCY	= 25	YRS
DESIGN HW ELEVATION	= 36.5	FT
BASE DISCHARGE	= 3,580	CFS
BASE FREQUENCY	= 100	YRS
BASE HW ELEVATION	= 37.67	FT
OVERTOPPING DISCHARGE	= 2,420	CFS
OVERTOPPING FREQUENCY	= 25	YRS
OVERTOPPING ELEVATION	= 36.1	FT
DATE OF SURVEY	= NOV. 2012	
W.S. ELEVATION AT DATE OF SURVEY	= 32.1	FT

BM10 ELEVATION = 37.42
N 748606 E 2531222
BL STATION 7+03.00 59 LEFT
R/R SPIKE IN 30" WHITE OAK

BEGIN GRADE
POT STA 10+00.00 -L-
EL. 38.60

END GRADE
POT STA 17+05.00 -L-
EL. 36.85

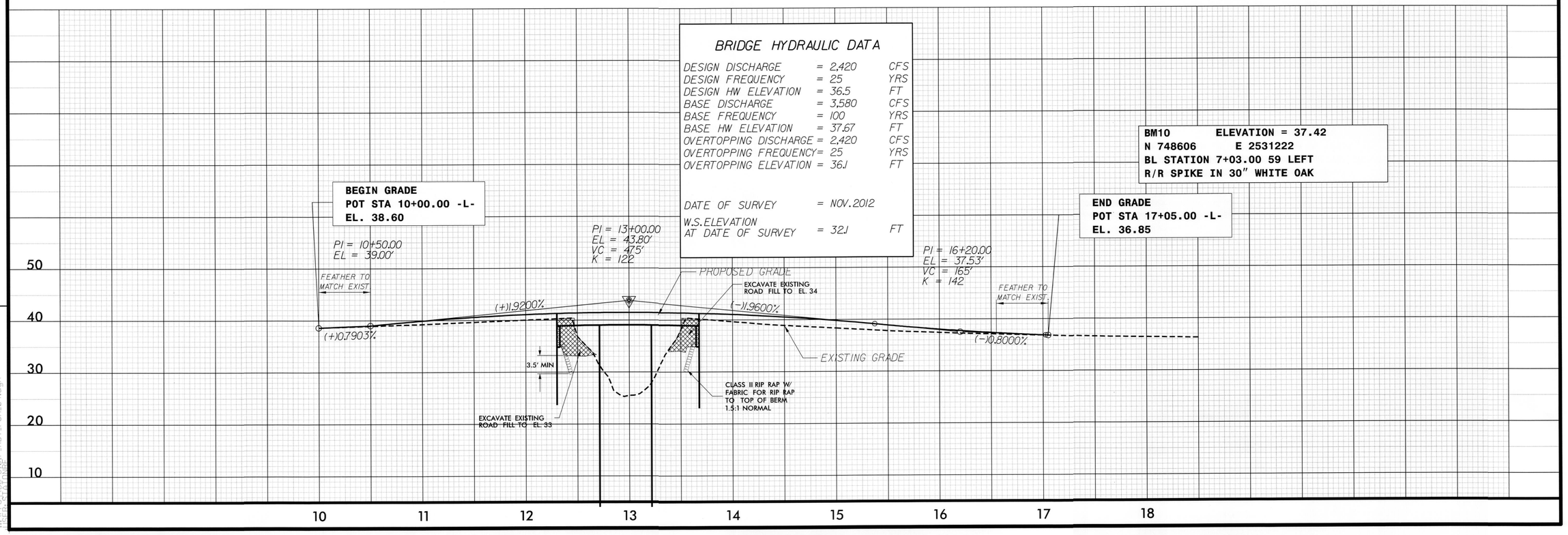

11/26/2013 12:02:25 PM
Project: BD-5101P ROW_PSH_04.dgn
User: STOWNSEND

PROJECT REFERENCE NO.	SHEET NO.
BD-5101P	EC-1
R/W SHEET NO.	

Prepared by:

MI ENGINEERING, PLLC

Designed by: Jerry Beard, PE
Level III: Designer of Erosion and Sediment Control Plans
Certification Number: 3167

1011 SCHAUB DRIVE, SUITE 100
RALEIGH, NC 27606
919-851-6606 (PH)
919-851-6645 (F)

2012 STANDARD SPECIFICATIONS

NORTH CAROLINA PROFESSIONAL SEAL 19669 ENGINEER JERRY J. BEARD
11/27/13

EROSION CONTROL PLAN

30' 0' 30' 60'
ENGLISH

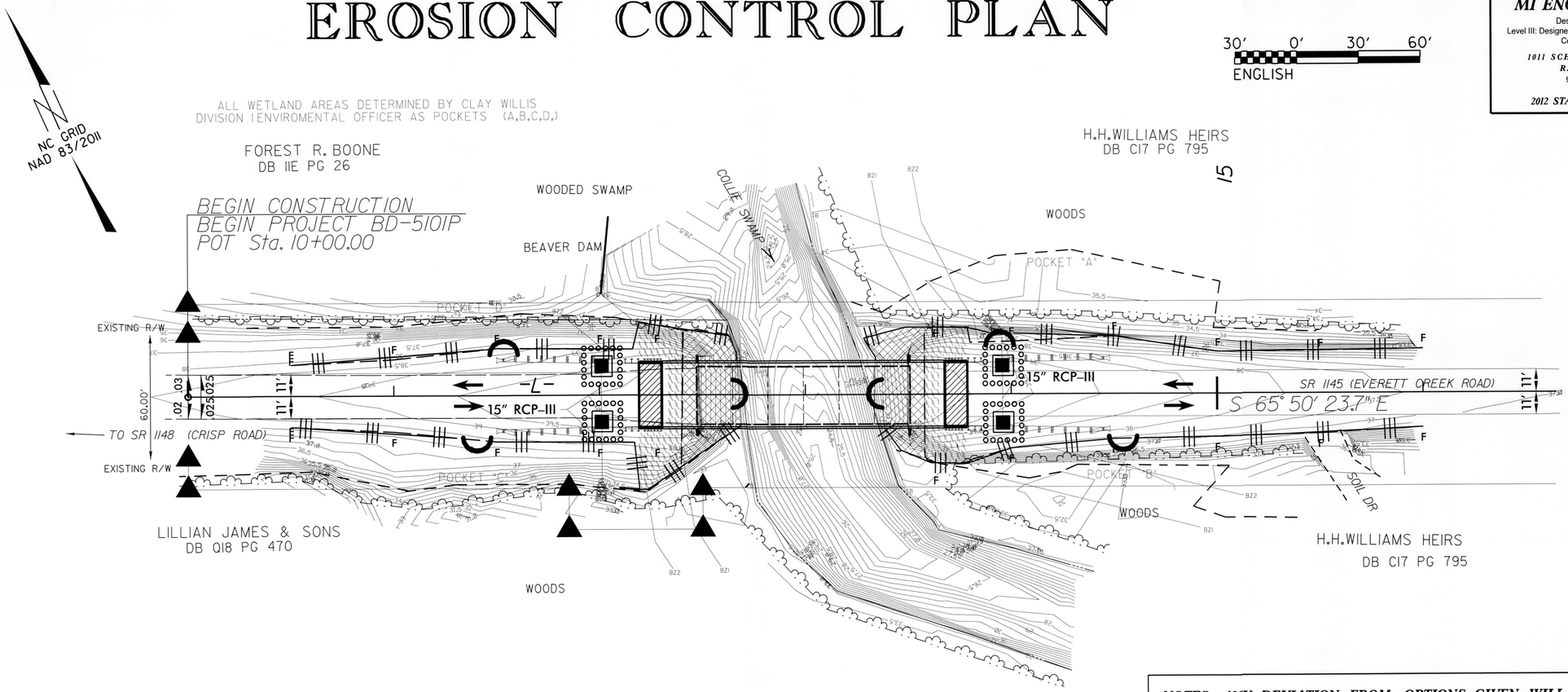

NOTES: ***ANY DEVIATION FROM OPTIONS GIVEN WILL REQUIRE PRIOR APPROVAL BY ENGINEER.***

ADDITIONAL EROSION CONTROL DEVICES MAY NEED TO BE INSTALLED AS DIRECTED BY THE ENGINEER.

SITE DESCRIPTION	STABILIZATION TIME	TIMEFRAME EXCEPTIONS
PERIMETER DIKES, SWALES, DITCHES AND SLOPES	7 DAYS	NONE
HIGH QUALITY WATER (HQW) ZONES	7 DAYS	NONE
SLOPES STEEPER THAN 3:1	7 DAYS	IF SLOPES ARE 10' OR LESS IN LENGTH AND ARE NOT STEEPER THAN 2:1, 14 DAYS ARE ALLOWED.
SLOPES 3:1 OR FLATTER	14 DAYS	7 DAYS FOR SLOPES GREATER THAN 50' IN LENGTH.
ALL OTHER AREAS WITH SLOPES FLATTER THAN 4:1	14 DAYS	NONE, EXCEPT FOR PERIMETERS AND HQW ZONES.

Std. #	Description	Symbol	QUANTITY
1605.01	High Vis Temporary Silt Fence		975 LF
1632.03	Rock Inlet Sediment Trap Type C		4 EA.
SP	Coir Fiber Wattle Barrier		120 LF

PROJECT REFERENCE NO.	SHEET NO.
BD-5101P	EC-2
R/W SHEET NO.	

Prepared by:

MI ENGINEERING, PLLC

Designed by: Jerry Beard, PE
Level III: Designer of Erosion and Sediment Control Plans
Certification Number: 3167

1011 SCHAUB DRIVE, SUITE 100
RALEIGH, NC 27606
919-851-6606 (PH)
919-851-6645 (F)

2012 STANDARD SPECIFICATIONS

NORTH CAROLINA PROFESSIONAL SEAL 19661 ENGINEER JERRY J. BEARD
11/27/13

EROSION CONTROL PLAN

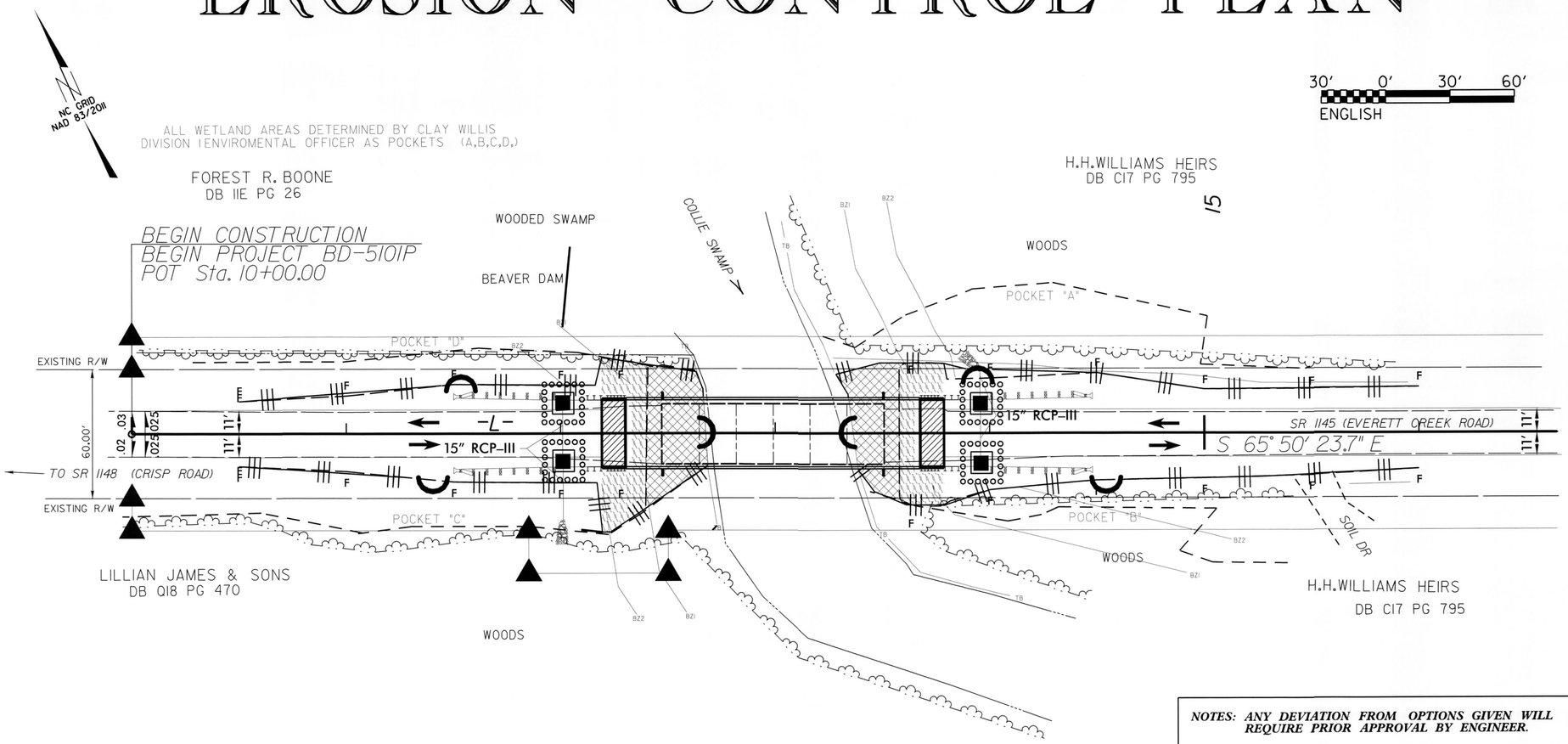

NOTES: ***ANY DEVIATION FROM OPTIONS GIVEN WILL REQUIRE PRIOR APPROVAL BY ENGINEER.***

ADDITIONAL EROSION CONTROL DEVICES MAY NEED TO BE INSTALLED AS DIRECTED BY THE ENGINEER.

SITE DESCRIPTION	STABILIZATION TIME	TIMEFRAME EXCEPTIONS
PERIMETER DIKES, SWALES, DITCHES AND SLOPES	7 DAYS	NONE
HIGH QUALITY WATER (HQW) ZONES	7 DAYS	NONE
SLOPES STEEPER THAN 3:1	7 DAYS	IF SLOPES ARE 10' OR LESS IN LENGTH AND ARE NOT STEEPER THAN 2:1, 14 DAYS ARE ALLOWED.
SLOPES 3:1 OR FLATTER	14 DAYS	7 DAYS FOR SLOPES GREATER THAN 50' IN LENGTH.
ALL OTHER AREAS WITH SLOPES FLATTER THAN 4:1	14 DAYS	NONE, EXCEPT FOR PERIMETERS AND HQW ZONES.

Std. #	Description	Symbol	QUANTITY
1605.01	High Vis Temporary Silt Fence		975 LF
1632.03	Rock Inlet Sediment Trap Type C		4 EA.
SP	Coir Fiber Wattle Barrier		120 LF

PROJECT REFERENCE NO.	SHEET NO.
BD-5101P	EC-3

COIR FIBER WATTLE BARRIER DETAIL

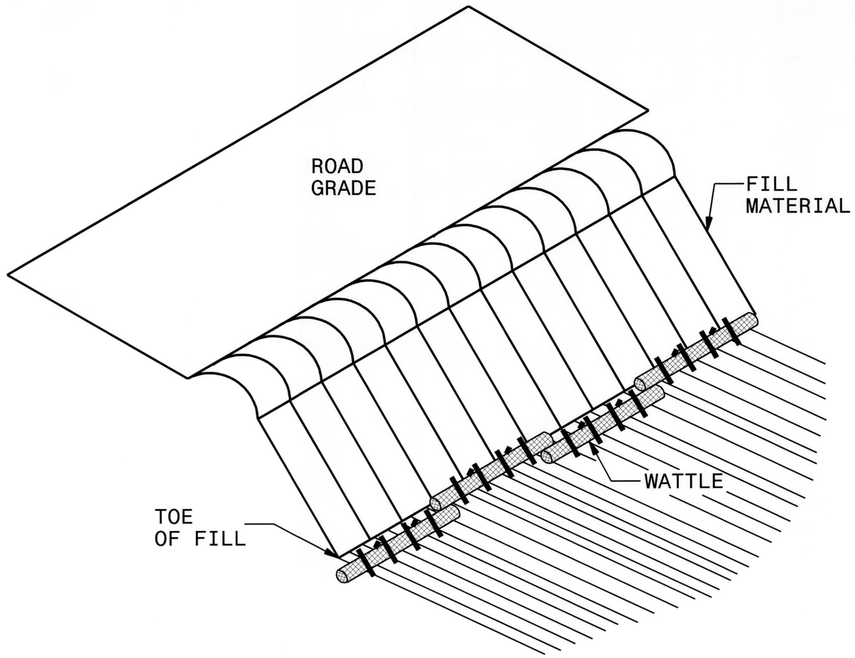

ISOMETRIC VIEW

NOTES:

USE MINIMUM 18 IN. NOMINAL DIAMETER COIR FIBER (COCONUT) WATTLE AND LENGTH OF 10 FT.

EXCAVATE A 2 TO 3 INCH TRENCH FOR WATTLE TO BE PLACED.

DO NOT PLACE WATTLES ON TOE OF SLOPE.

USE 2 FT. WOODEN STAKES WITH A 2 IN. BY 2 IN. NOMINAL CROSS SECTION.

INSTALL A MINIMUM OF 2 UPSLOPE STAKES AND 4 DOWNSLOPE STAKES AT AN ANGLE TO WEDGE WATTLE TO GROUND.

PROVIDE STAPLES MADE OF 0.125 IN. DIAMETER STEEL WIRE FORMED INTO A U SHAPE NOT LESS THAN 12″ IN LENGTH.

INSTALL STAPLES APPROXIMATELY EVERY 1 LINEAR FOOT ON BOTH SIDES OF WATTLE AND AT EACH END TO SECURE IT TO THE SOIL.

FOR BREAKS ALONG LARGE SLOPES, USE MAXIMUM SPACING OF 20 FT.

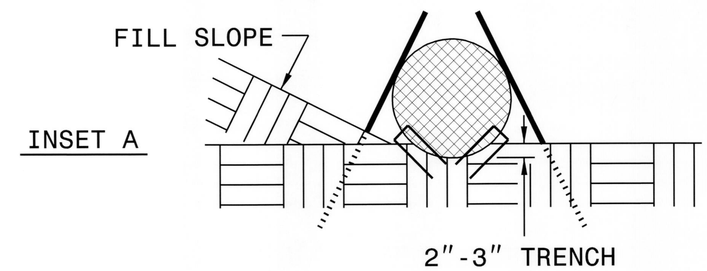

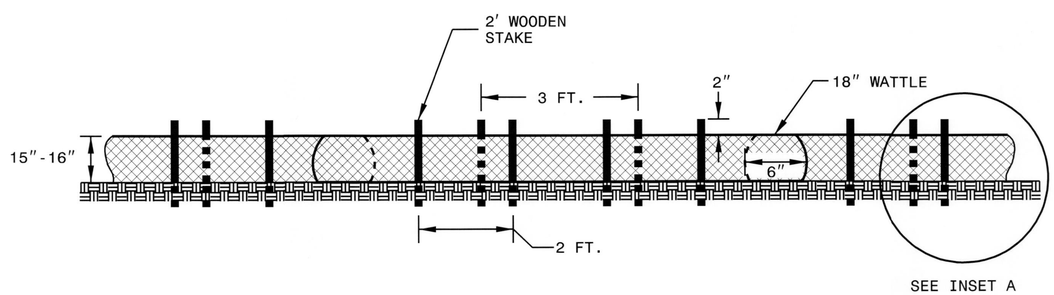

FRONT VIEW

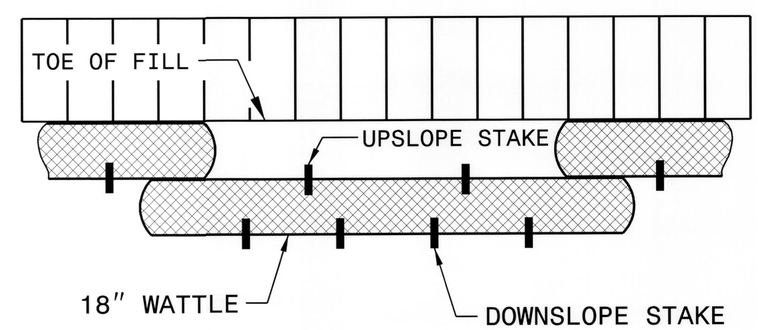

TOP VIEW

PROJECT REFERENCE NO.	SHEET NO.
X-XXXX	EC-2G
R/W SHEET NO.	
ROADWAY DESIGN ENGINEER	HYDRAULICS ENGINEER

COIR FIBER WATTLE DETAIL

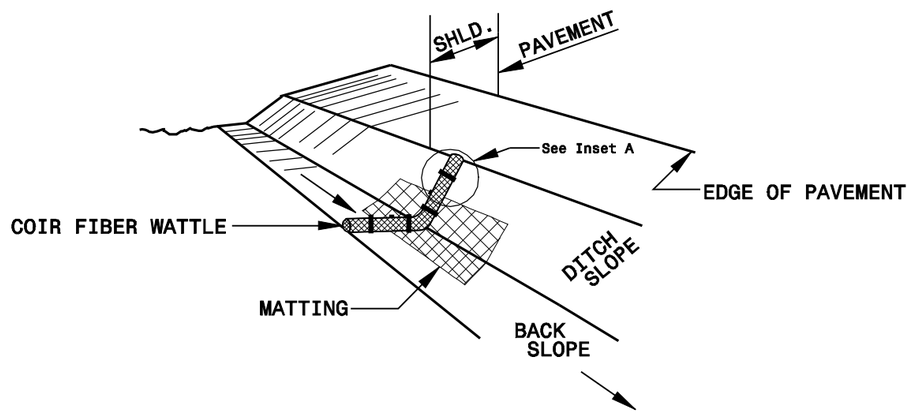

ISOMETRIC VIEW

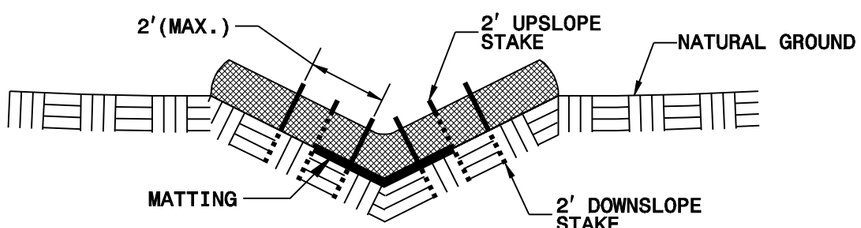

CROSS SECTION VEE DITCH

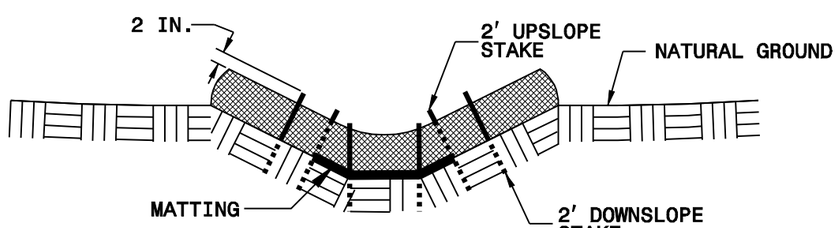

CROSS SECTION TRAPEZOIDAL DITCH

NOTES:

USE MINIMUM 12 IN. DIAMETER COIR FIBER (COCONUT FIBER) WATTLE.

USE 2 FT. WOODEN STAKES WITH A 2 IN. BY 2 IN. NOMINAL CROSS SECTION.

ONLY INSTALL WATTLE(S) TO A HEIGHT IN DITCH SO FLOW WILL NOT WASH AROUND WATTLE AND SCOUR DITCH SLOPES AND AS DIRECTED.

INSTALL A MINIMUM OF 2 UPSLOPE STAKES AND 4 DOWNSLOPE STAKES AT AN ANGLE TO WEDGE WATTLE TO BOTTOM OF DITCH.

PROVIDE STAPLES MADE OF 0.125 IN. DIAMETER STEEL WIRE FORMED INTO A U SHAPE NOT LESS THAN 12" IN LENGTH.

INSTALL STAPLES APPROXIMATELY EVERY 1 LINEAR FOOT ON BOTH SIDES OF WATTLE AND AT EACH END TO SECURE IT TO THE SOIL.

INSTALL MATTING IN ACCORDANCE WITH SECTION 1631 OF THE STANDARD SPECIFICATIONS.

INSET A

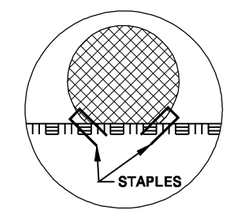

INSET B

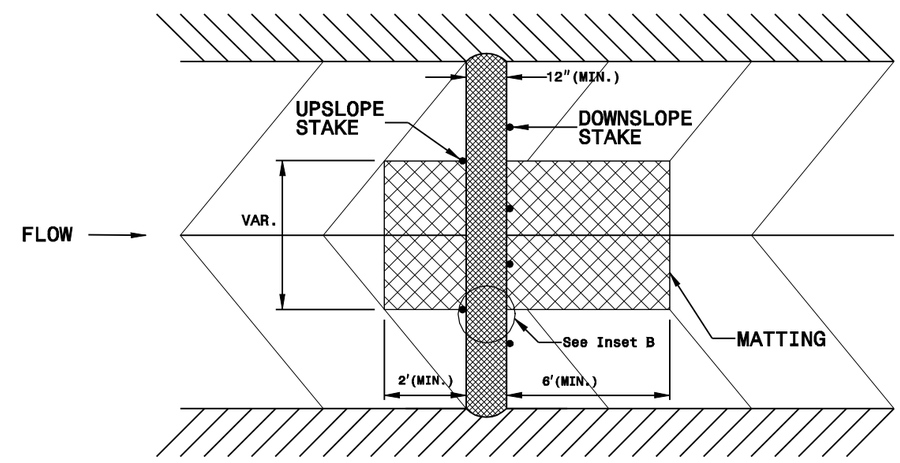

TOP VIEW

SILT FENCE COIR FIBER WATTLE BREAK DETAIL

PROJECT REFERENCE NO.	SHEET NO.
X-XXXX	EC-2G
R/W SHEET NO.	
ROADWAY DESIGN ENGINEER	HYDRAULICS ENGINEER

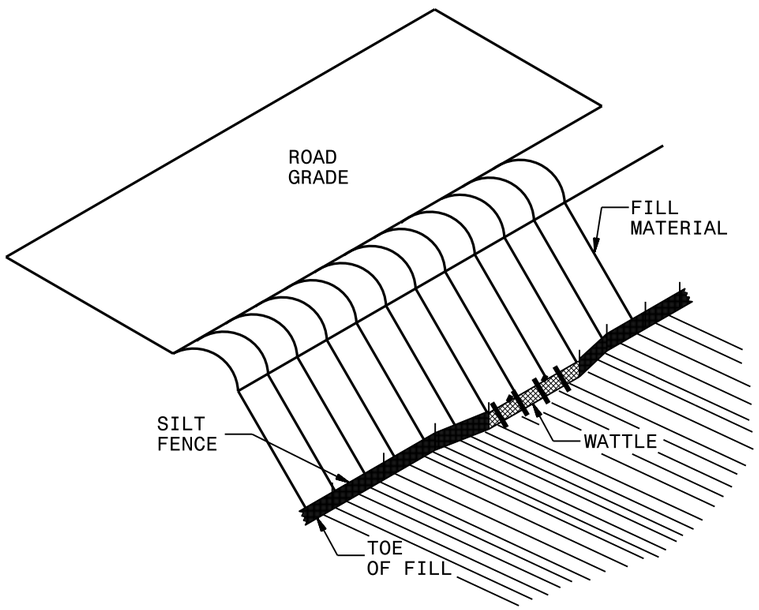

ISOMETRIC VIEW

NOTES:

USE MINIMUM 12 IN. DIAMETER COIR FIBER (COCONUT FIBER) WATTLE AND LENGTH OF 10 FT.

EXCAVATE A 1 TO 2 INCH TRENCH FOR WATTLE TO BE PLACED.

DO NOT PLACE WATTLE ON TOE OF SLOPE.

USE 2 FT. WOODEN STAKES WITH A 2 IN. BY 2 IN. NOMINAL CROSS SECTION.

INSTALL A MINIMUM OF 2 UPSLOPE STAKES AND 4 DOWNSLOPE STAKES AT AN ANGLE TO WEDGE WATTLE TO GROUND.

PROVIDE STAPLES MADE OF 0.125 IN. DIAMETER STEEL WIRE FORMED INTO A U SHAPE NOT LESS THAN 12″ IN LENGTH.

INSTALL STAPLES APPROXIMATELY EVERY 1 LINEAR FOOT ON BOTH SIDES OF WATTLE AND AT EACH END TO SECURE IT TO THE SOIL.

WATTLE INSTALLATION CAN BE ON OUTSIDE OF THE SILT FENCE AS DIRECTED.

INSTALL TEMPORARY SILT FENCE IN ACCORDANCE WITH SECTION 1605 OF THE STANDARD SPECIFICATIONS.

INSET A

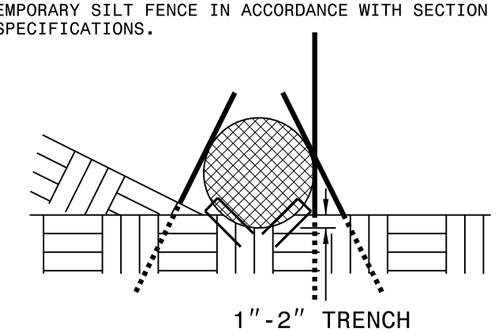

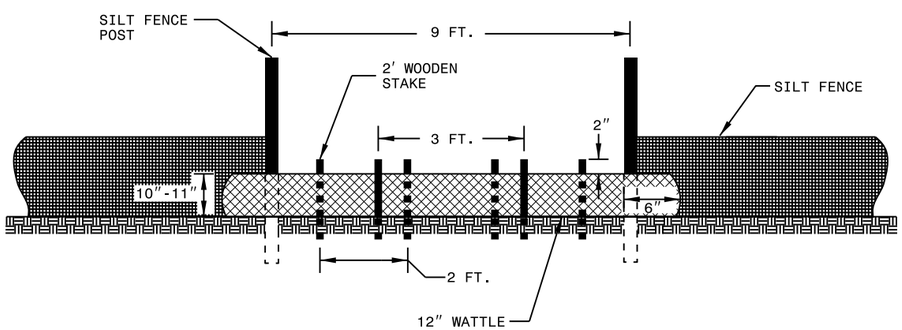

VIEW FROM SLOPE

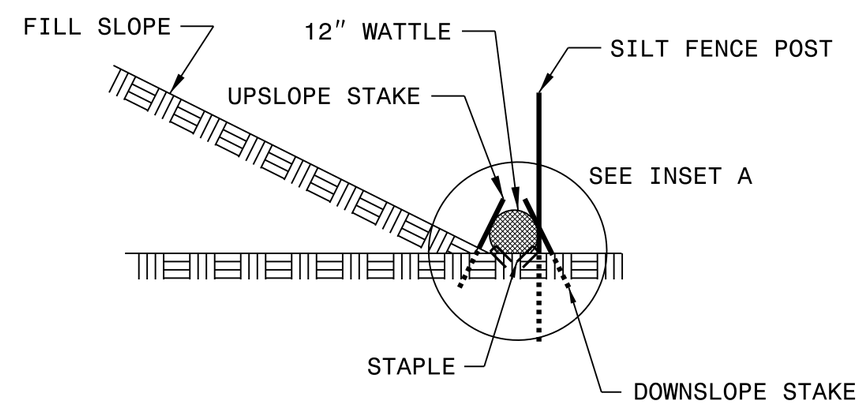

SIDE VIEW

STATE OF NORTH CAROLINA
NCDOT RAIL DIVISION

CROSS-SECTION SUMMARY

NOTE: EMBANKMENT COLUMN DOES NOT INCLUDE BACKFILL FOR UNDERCUT

Station L	Uncl. Exc. (cu. yd.)	Embt (cu. yd.)
10+00.00	0	0
10+50.00	1	1
11+00.00	1	9
11+50..00	0	33
12+00.00	0	50
12+27.82	0	26
13+63.07	0	3
14+00.00	0	53
14+50.00	0	84
15+00.00	0	74
15+50.00	0	54
16+00.00	0	28
16+50.00	0	10
17+00.00	0	3
17+05.00	0	0

8/23/99

12/2/2013 2:08:14 PM
X:\ECO\BD5101P_RDY_XPL_L.DGN
USER:STATONRE

0 2.5 5	PROJ. REFERENCE NO.	SHEET NO.
	BD-5101P	X-2

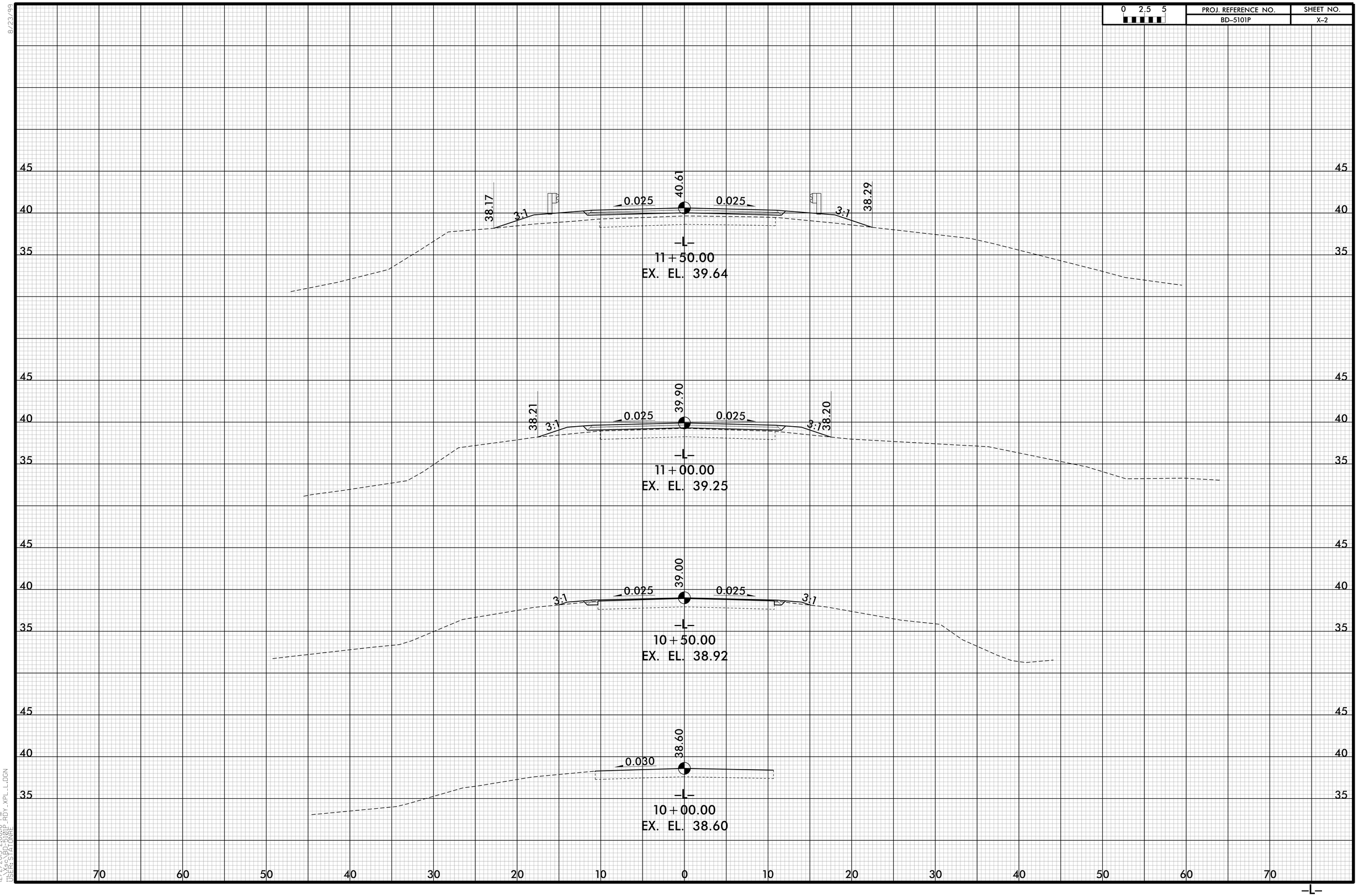

8/23/99

12/2/2013 2:08:16 PM
U:\CSD\BD-5101P_RDY_XPL_L.DGN
USER: STATONRE

8/23/99

0 2.5 5	PROJ. REFERENCE NO.	SHEET NO.
	BD-5101P	X-3

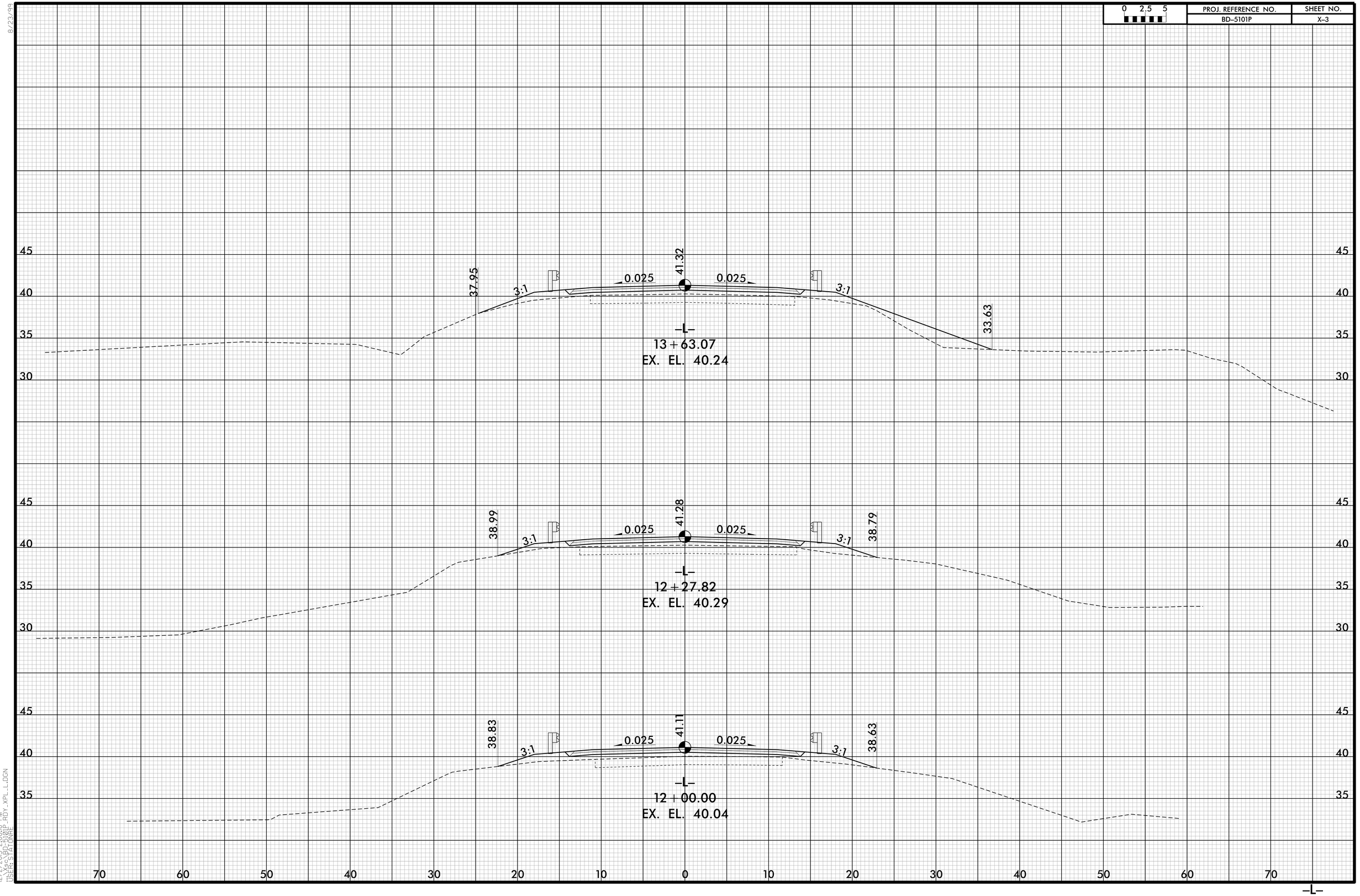

12/22/2013 2:08:18 PM
C:\Projects\BD-5101P_RDY_XPL_L.DGN
USERS:FATONNE

0 2.5 5	PROJ. REFERENCE NO.	SHEET NO.
	BD-5101P	X-4

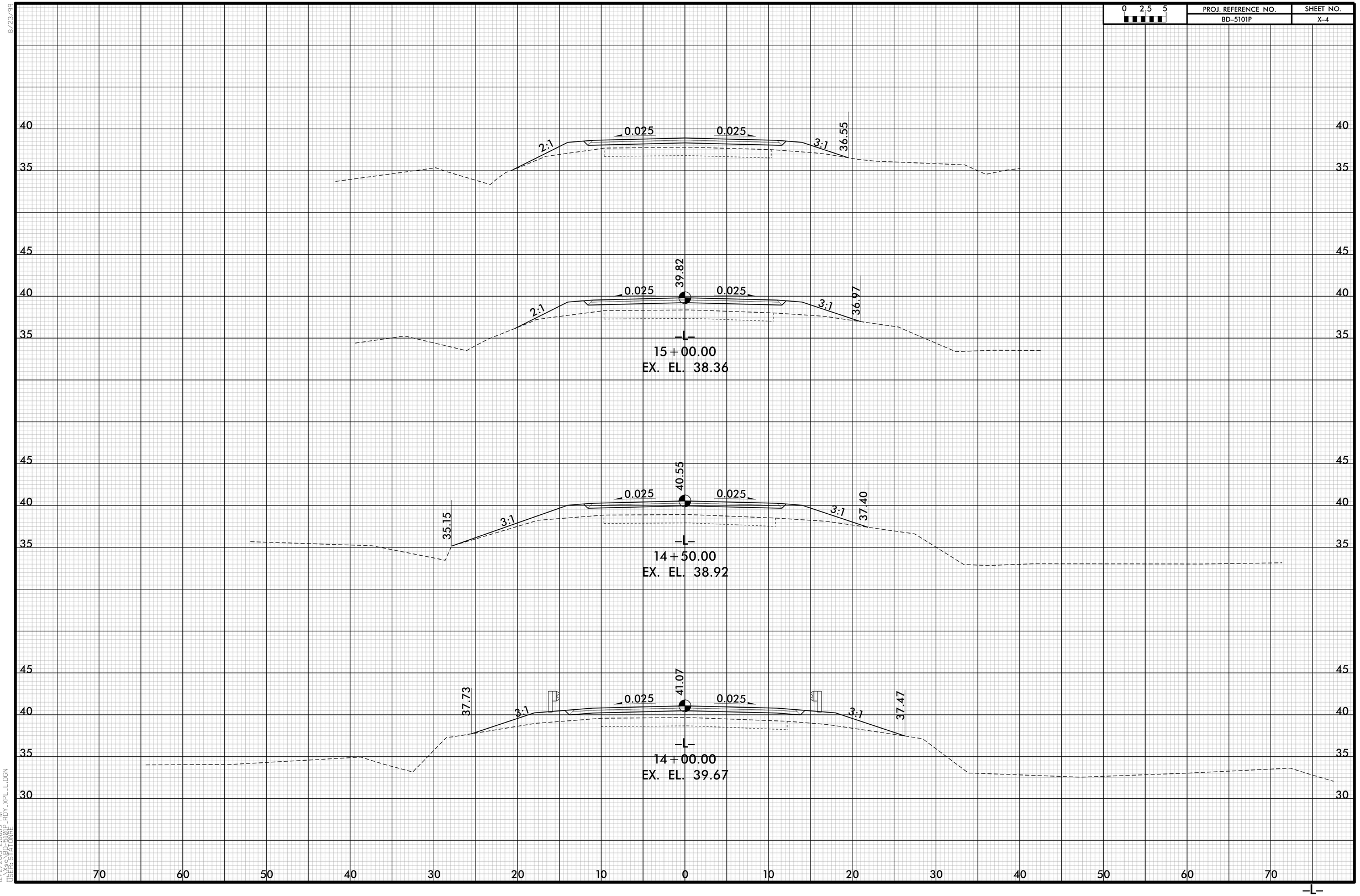

8/23/99

12/2/2013 2:08:18 PM
C:\Projects\BD-5101P_RDY_XPL_L.DGN
USERS\TATONHE

8/23/99

0 2.5 5	PROJ. REFERENCE NO.	SHEET NO.
	BD-5101P	X-5

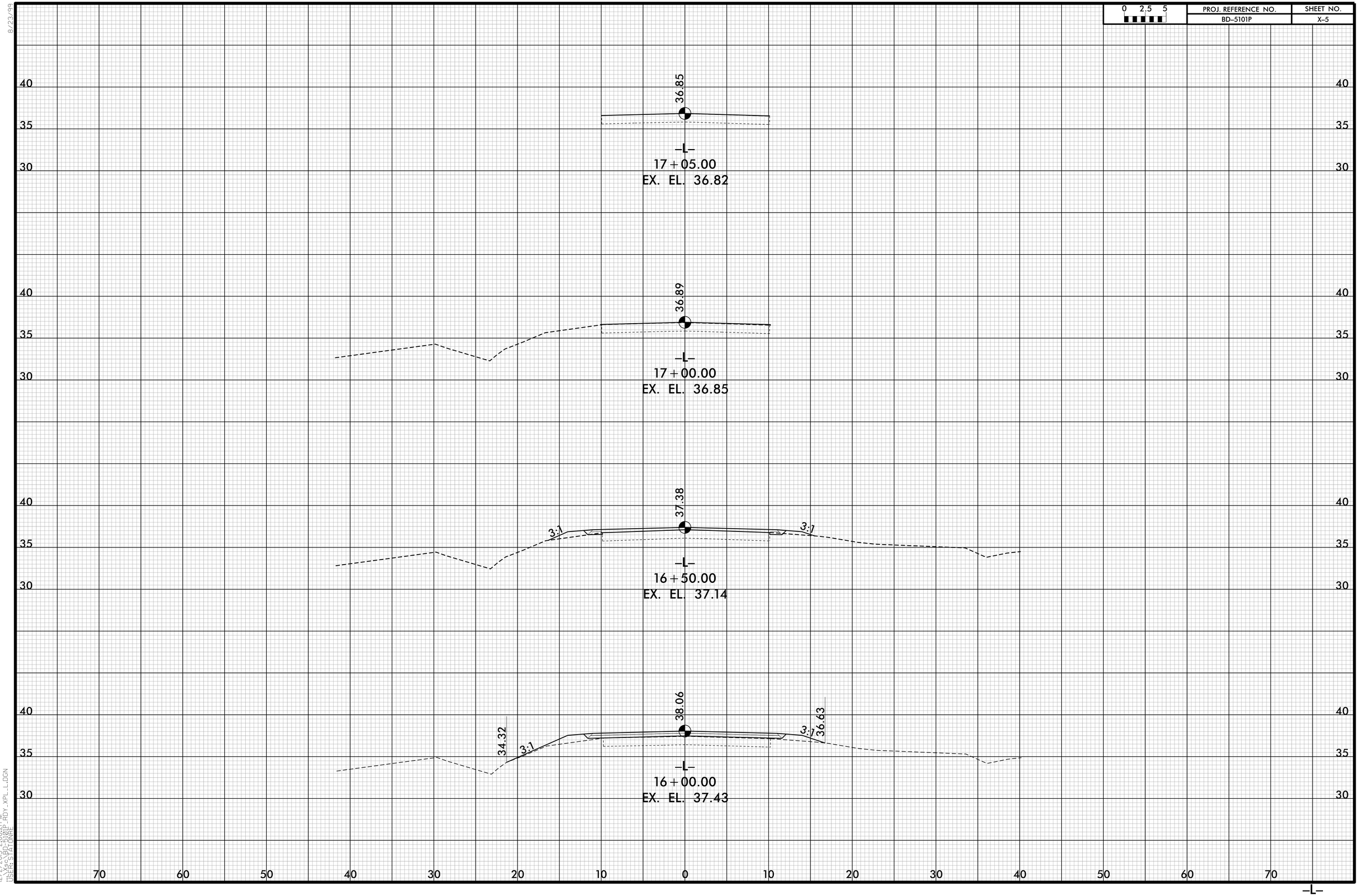

12/2/2013 2:08:21 PM
USER: BD-5101P_RDY_XPL_L.DGN
USERS\ATONRE

F.A. PROJECT No.: BRZ-1145(7)

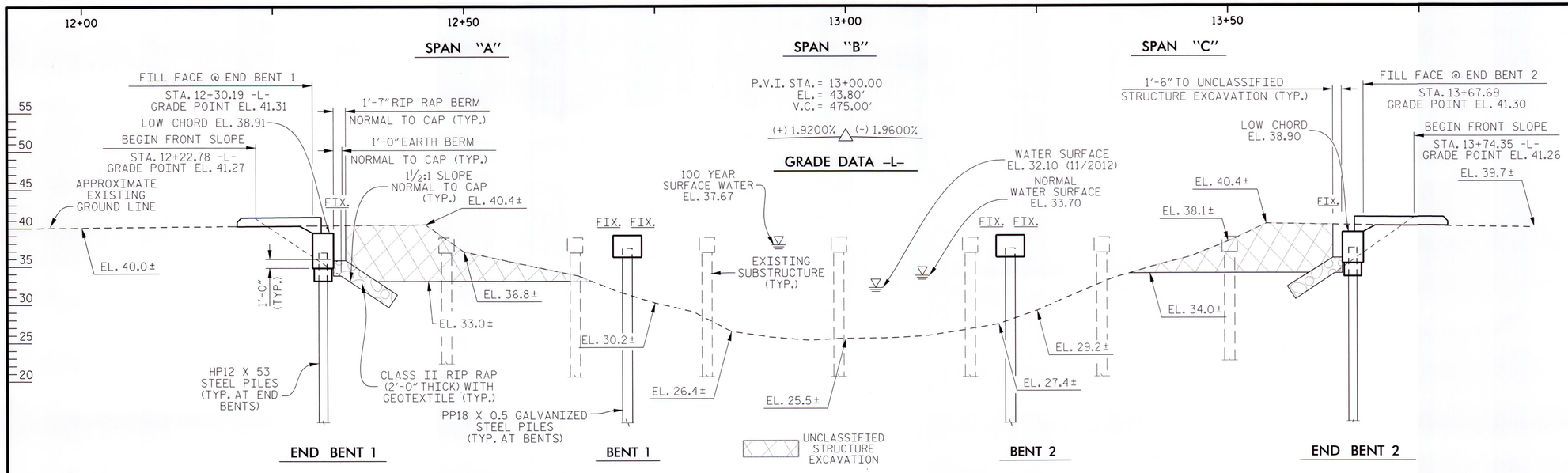

SECTION ALONG -L-

(SECTION AT RIGHT ANGLES TO END BENTS AND BENTS)

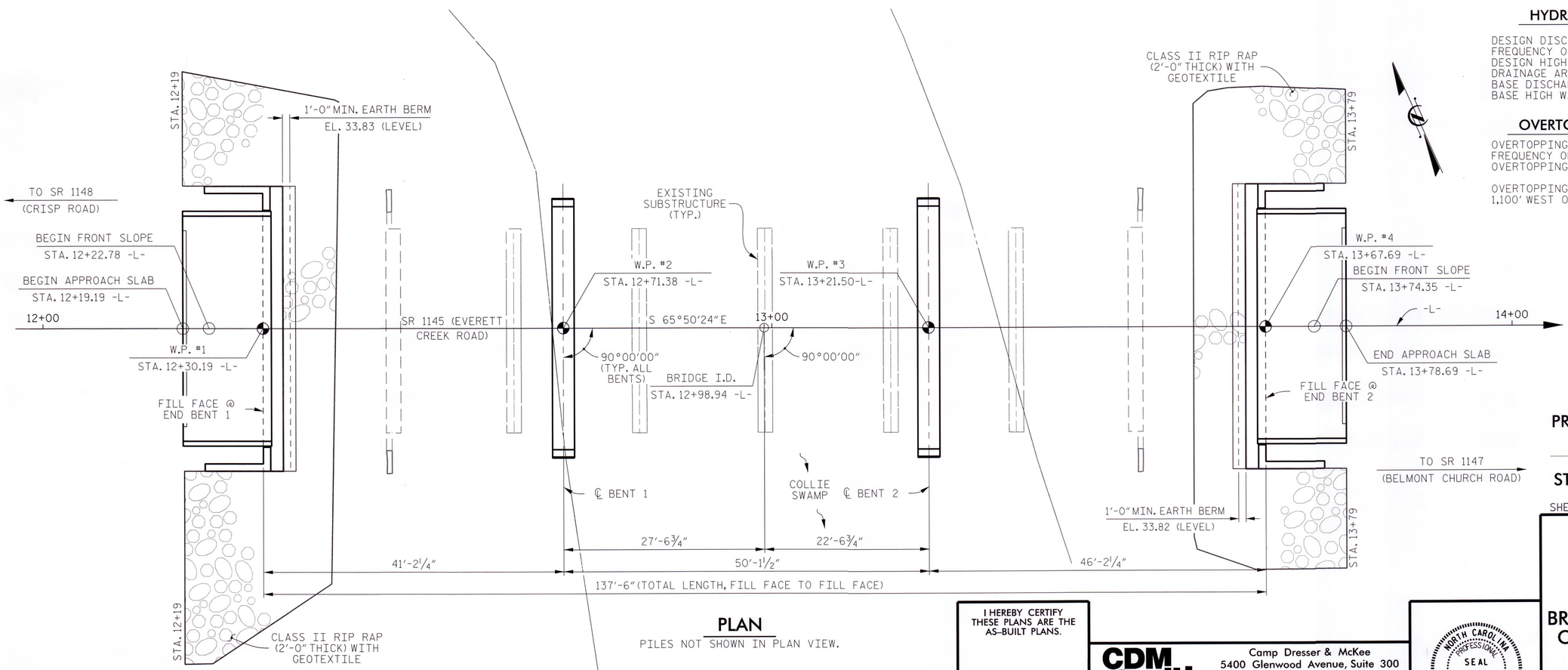

PLAN

PILES NOT SHOWN IN PLAN VIEW.

HYDRAULIC DATA

DESIGN DISCHARGE	= 2,420 CFS
FREQUENCY OF DESIGN FLOOD	= 25 YEARS
DESIGN HIGH WATER ELEVATION	= 36.5 FT.
DRAINAGE AREA	= 43.66 SQ. MI.
BASE DISCHARGE (Q100)	= 3,580 CFS
BASE HIGH WATER ELEVATION	= 37.67 FT.

OVERTOPPING FLOOD DATA

OVERTOPPING DISCHARGE	= 2,420 CFS
FREQUENCY OF OVERTOPPING FLOOD	= 25 YEARS
OVERTOPPING FLOOD ELEVATION	= 36.1 FT.

OVERTOPPING OCCURS ON ROAD APPROXIMATELY 1,100' WEST OF BRIDGE.

PROJECT NO. BD-5101P

MARTIN COUNTY

STATION: 12+98.94 -L-

SHEET 1 OF 2 REPLACES BRIDGE No. 60

I HEREBY CERTIFY THESE PLANS ARE THE AS-BUILT PLANS.

CDM Smith

Camp Dresser & McKee
5400 Glenwood Avenue, Suite 300
Raleigh, NC 27612-3228
NC COA No. F-1255

DRAWN BY :	C.E.DIXON	DATE :	8-13
CHECKED BY :	J.B.TAYLOR	DATE :	8-13
DESIGN ENGINEER :	J.B.TAYLOR	DATE :	8-13

DWG. No. 1

NORTH CAROLINA PROFESSIONAL SEAL 33698 ENGINEER JOSHUA B. TAYLOR

11-01-12

STATE OF NORTH CAROLINA
DEPARTMENT OF TRANSPORTATION
RALEIGH

GENERAL DRAWING

BRIDGE OVER COLLIE SWAMP ON SR 1145 (-L-) BETWEEN SR 1148 AND SR 1147

REVISIONS						
No.	BY:	DATE:	No.	BY:	DATE:	
1			3			
2			4			

SHEET No. S-1

TOTAL SHEETS

FILE: P:\NCDOT\BD5101P\BD5101P_Bridge_60_gdl.dgn
DATE: 10/30/2013 2:41:29 PM

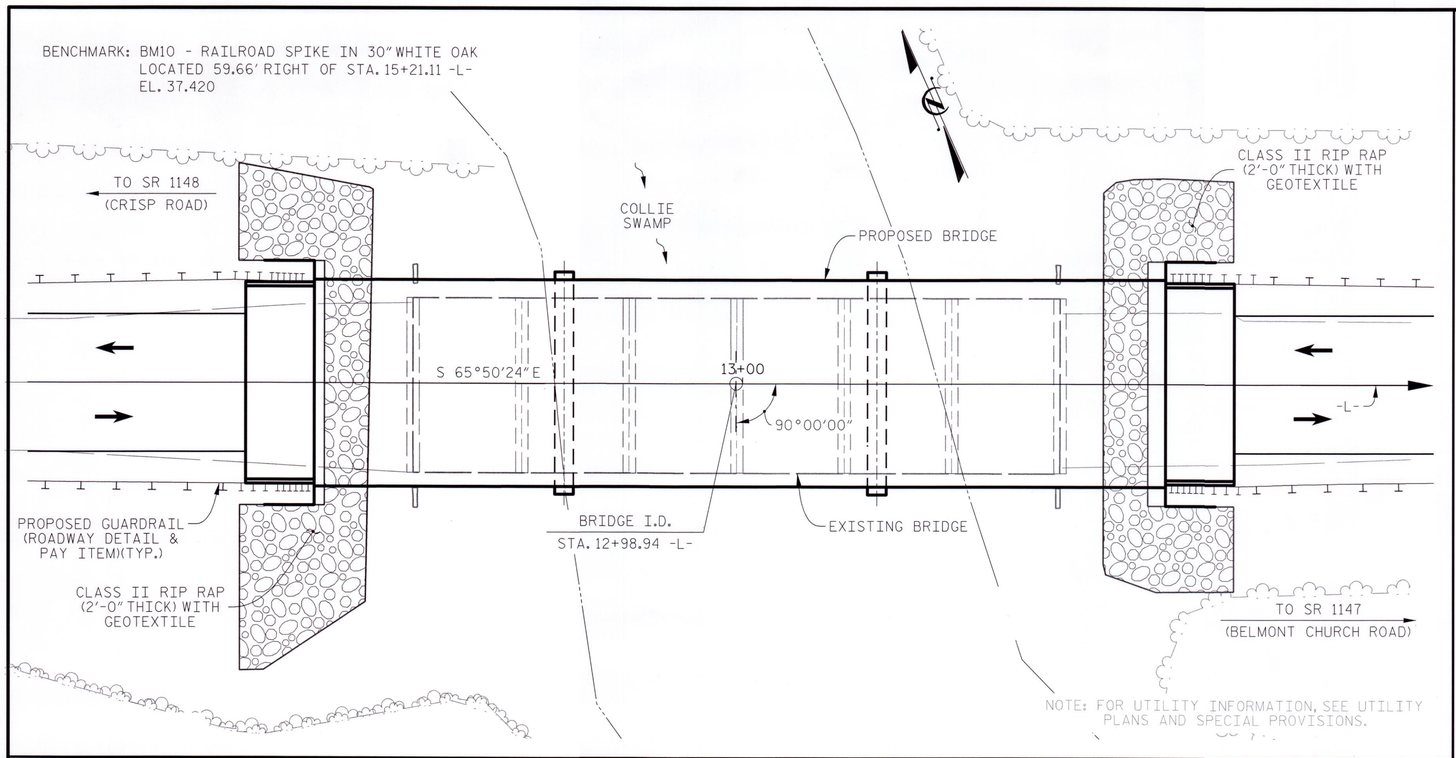

LOCATION SKETCH

GENERAL NOTES

ASSUMED LIVE LOAD = HL-93 OR ALTERNATE LOADING.

FOR OTHER DESIGN DATA AND GENERAL NOTES, SEE SHEET SN.

FOR EROSION CONTROL MEASURES SEE EROSION CONTROL PLANS.

THIS BRIDGE HAS BEEN DESIGNED IN ACCORDANCE WITH THE AASHTO LRFD BRIDGE DESIGN SPECIFICATIONS.

THE EXISTING 6 SPAN STRUCTURE WITH SPAN LENGTHS OF 17'-0" WITH 17 LINES OF STEEL I-BEAMS AT 1'-9 1/2" SPACING SUPPORTING REINFORCED CONCRETE DECK WITH 28'-1" CLEAR ROADWAY WIDTH ON CONCRETE CAP AND TIMBER PILES SHALL BE REMOVED. FOR REMOVAL OF EXISTING STRUCTURE, SEE SPECIAL PROVISIONS.

REMOVAL OF THE EXISTING BRIDGE SHALL BE PERFORMED SO AS NOT TO ALLOW DEBRIS TO FALL INTO THE WATER. THE CONTRACTOR SHALL REMOVE THE BRIDGE AND SUBMIT PLANS FOR DEMOLITION IN ACCORDANCE WITH ARTICLE 402-2 OF THE STANDARD SPECIFICATIONS.

THE MATERIAL SHOWN IN THE CROSS-HATCHED AREA SHALL BE EXCAVATED FOR A DISTANCE OF 19.5 FT. EACH SIDE OF CENTERLINE ROADWAY AS DIRECTED BY THE ENGINEER. THIS WORK WILL BE PAID FOR AT THE CONTRACT LUMP SUM PRICE FOR UNCLASSIFIED STRUCTURE EXCAVATION. SEE SECTION 412 OF THE STANDARD SPECIFICATIONS.

THE SUBSTRUCTURE OF THE EXISTING BRIDGE INDICATED ON THE PLANS IS FROM THE BEST INFORMATION AVAILABLE. SINCE THIS INFORMATION IS SHOWN FOR THE CONVENIENCE OF THE CONTRACTOR, THE CONTRACTOR SHALL HAVE NO CLAIM WHATSOEVER AGAINST THE DEPARTMENT OF TRANSPORTATION FOR ANY DELAYS OR ADDITIONAL COST INCURRED BASED ON DIFFERENCES BETWEEN THE EXISTING BRIDGE SUBSTRUCTURE SHOWN ON THE PLANS AND THE ACTUAL CONDITIONS AT THE PROJECT SITE.

ASPHALT WEARING SURFACE IS INCLUDED IN ROADWAY QUANTITY ON ROADWAY PLANS.

THIS STRUCTURE HAS BEEN DESIGNED IN ACCORDANCE WITH "HEC 18 - EVALUATING SCOUR AT BRIDGES".

FOR SUBMITTAL OF WORKING DRAWINGS, SEE SPECIAL PROVISIONS.

FOR FALSEWORK AND FORMWORK, SEE SPECIAL PROVISIONS.

FOR CRANE SAFETY, SEE SPECIAL PROVISIONS.

FOR GROUT FOR STRUCTURES, SEE SPECIAL PROVISIONS.

THIS BRIDGE IS LOCATED IN SEISMIC ZONE 1.

THE CONTRACTOR SHALL PROVIDE INDEPENDENT ASSURANCE SAMPLES OF REINFORCING STEEL AS FOLLOWS: FOR PROJECTS REQUIRING UP TO 400 TONS OF REINFORCING STEEL, ONE 30 INCH SAMPLE OF EACH SIZE BAR USED, AND FOR PROJECTS REQUIRING OVER 400 TONS OF REINFORCING STEEL, TWO 30 INCH SAMPLES OF EACH SIZE BAR USED. THE BARS FROM WHICH THE SAMPLES ARE TAKEN MUST THEN BE SPLICED WITH REPLACEMENT BARS OF THE SIZE AND LENGTH OF THE SAMPLE, PLUS A MINIMUM LAP SPLICE OF THIRTY BAR DIAMETERS. PAYMENT FOR THE SAMPLES OF REINFORCING STEEL SHALL BE CONSIDERED INCIDENTAL TO VARIOUS PAY ITEMS.

INASMUCH AS THE PAINT SYSTEM ON THE EXISTING STRUCTURAL STEEL CONTAINS LEAD, THE CONTRACTOR'S ATTENTION IS DIRECTED TO ARTICLE 107-1 OF THE STANDARD SPECIFICATIONS. ANY COSTS RESULTING FROM COMPLIANCE WITH APPLICABLE STATE OR FEDERAL REGULATIONS PERTAINING TO HANDLING OF MATERIALS CONTAINING LEAD BASED PAINT SHALL BE INCLUDED IN THE BID PRICE FOR "REMOVAL OF EXISTING STRUCTURE AT STATION 12+98.94 -L-".

FOR INTERIOR BENTS NO. 1 AND NO. 2, ONLY PARTIAL GALVANIZING OF THE PILES IS REQUIRED. SEE INTERIOR BENT SHEETS FOR REQUIRED GALVANIZED LENGTHS. PAYMENT FOR PARTIAL GALVANIZED PILES WILL BE MADE UNDER THE CONTRACT UNIT PRICE FOR GALVANIZED STEEL PILES.

TOTAL BILL OF MATERIAL

	REMOVAL OF EXISTING STRUCTURE AT STA. 12+98.94 -L-	PDA TESTING	UNCLASSIFIED STRUCTURE EXCAVATION AT STA 12+98.94 -L-	CLASS A CONCRETE	BRIDGE APPROACH SLABS AT STA. 12+98.94 -L-	REINFORCING STEEL	HP 12 x 53 STEEL PILES		PP 18 x 0.50 GALVANIZED STEEL PILES		PILE REDRIVES	VERTICAL CONCRETE BARRIER RAIL	RIP RAP CLASS II (2'-0" THICK)	GEOTEXTILE FOR DRAINAGE	ELASTOMERIC BEARINGS	3'-0" x 1'-9" PRESTRESSED CONCRETE CORED SLABS	
	LUMP SUM	EACH	LUMP SUM	CU. YD.	LUMP SUM	LBS.	No.	LIN. FT.	No.	LIN. FT.	EACH	LIN. FT.	TONS	SQ. YD.	LUMP SUM	No.	LIN. FT.
SUPERSTRUCTURE	LUMP SUM	-	-	-	LUMP SUM	-	-	-	-	-	-	270.50	-	-	LUMP SUM	33	1485
END BENT 1	-	-	LUMP SUM	21.6	-	2,636	7	490	-	-	-	-	135	150	-	-	-
BENT 1	-	-	-	10.3	-	2,102	-	-	7	805	-	-	-	-	-	-	-
BENT 2	-	-	-	10.3	-	2,102	-	-	7	805	-	-	-	-	-	-	-
END BENT 2	-	-	LUMP SUM	21.6	-	2,636	7	490	-	-	-	-	110	123	-	-	-
TOTAL	LUMP SUM	2	LUMP SUM	63.8	LUMP SUM	9,476	14	980	14	1610	1	270.50	245	273	LUMP SUM	33	1485

FOUNDATION NOTES

FOR PILES, SEE SECTION 450 OF THE STANDARD SPECIFICATIONS.

PILES AT BENT NOS. 1 AND 2 ARE DESIGNED FOR A FACTORED RESISTANCE OF 120 TONS PER PILE.

PILES AT END BENT NOS. 1 AND 2 ARE DESIGNED FOR A FACTORED RESISTANCE OF 65 TONS PER PILE.

DRIVE PILES AT END BENT NOS. 1 AND 2 TO A REQUIRED DRIVING RESISTANCE OF 109 TONS PER PILE.

DRIVE PILES AT BENT NOS. 1 AND 2 TO A REQUIRED DRIVING RESISTANCE OF 212 TONS PER PILE. THIS REQUIRED DRIVING RESISTANCE INCLUDES ADDITIONAL RESISTANCE FOR SCOUR.

INSTALL PILES AT BENT NOS. 1 AND 2 TO A TIP ELEVATION NO HIGHER THAN -65 FT.

INSTALL PILES AT END BENT NOS. 1 AND 2 TO A TIP ELEVATION NO HIGHER THAN -25 FT.

THE SCOUR CRITICAL ELEVATION FOR BENT NOS. 1 AND 2 IS ELEVATION +8 FT. SCOUR CRITICAL ELEVATIONS ARE USED TO MONITOR POSSIBLE SCOUR PROBLEMS DURING THE LIFE OF THE STRUCTURE.

IT HAS BEEN ESTIMATED THAT A HAMMER WITH AN EQUIVALENT RATED ENERGY IN THE RANGE OF 40,000 TO 45,000 FT-LBS PER BLOW WILL BE REQUIRED TO DRIVE PILES AT END BENT NOS. 1 AND 2 AND BENT NOS. 1 AND 2.

THIS ESTIMATED ENERGY RANGE DOES NOT RELEASE THE CONTRACTOR FROM PROVIDING DRIVING EQUIPMENT IN ACCORDANCE WITH SUBARTICLE 450-3(D)(2) OF THE STANDARD SPECIFICATIONS.

TESTING THE FIRST PRODUCTION PILE DRIVEN AT AN END BENT AND AN INTERIOR BENT WITH THE PDA DURING DRIVING IS REQUIRED. FOR PDA TESTING, SEE SECTION 450 OF THE STANDARD SPECIFICATIONS. FOR PILE DRIVING CRITERIA, SEE PILE DRIVING CRITERIA PROVISION.

PIPE PILE PLATES ARE NOT REQUIRED FOR STEEL PIPE PILES AT BENT NOS. 1 AND 2.

PROJECT NO. BD-5101P

MARTIN COUNTY

STATION: 12+98.94 -L-

SHEET 2 OF 2

STATE OF NORTH CAROLINA
DEPARTMENT OF TRANSPORTATION
RALEIGH

GENERAL DRAWING

BRIDGE OVER COLLIE SWAMP ON SR 1145 (-L-) BETWEEN SR 1148 AND SR 1147

CDM Smith
Camp Dresser & McKee
5400 Glenwood Avenue, Suite 300
Raleigh, NC 27612-3228
NC COA No. F-1255

DRAWN BY : C.E.DIXON DATE : 8-13
CHECKED BY : J.B.TAYLOR DATE : 8-13
DESIGN ENGINEER : J.B.TAYLOR DATE : 8-13

DWG. No. 2

NORTH CAROLINA PROFESSIONAL SEAL 33698 ENGINEER JOSHUA B. TAYLOR
11-01-13

REVISIONS						SHEET No.
No.	BY:	DATE:	No.	BY:	DATE:	S-2
1			3			TOTAL SHEETS
2			4			

FILE: P:\NCDOT\BD5101P\BD5101P_Bridge_60_gs02.dgn
DATE: 10/31/2013 10:06:17 AM

LOAD AND RESISTANCE FACTOR RATING (LRFD) SUMMARY FOR PRESTRESSED CONCRETE GIRDERS

LEVEL		VEHICLE	WEIGHT (W) (TONS)	CONTROLLING LOAD RATING	MINIMUM RATING FACTORS (RF)	TONS = W X RF	STRENGTH I LIMIT STATE											SERVICE III LIMIT STATE						COMMENT NUMBER
							LIVELOAD FACTORS	MOMENT					SHEAR					LIVELOAD FACTORS	MOMENT					
								DISTRIBUTION FACTORS (DF)	RATING FACTOR	SPAN	GIRDER LOCATION	DISTANCE FROM LEFT END OF SPAN (ft)	DISTRIBUTION FACTORS (DF)	RATING FACTOR	SPAN	GIRDER LOCATION	DISTANCE FROM LEFT END OF SPAN (ft)		DISTRIBUTION FACTORS (DF)	RATING FACTOR	SPAN	GIRDER LOCATION	DISTANCE FROM LEFT END OF SPAN (ft)	
DESIGN LOAD RATING		HL-93(Inv)	N/A	1	1.319	--	1.75	0.278	1.76	40'	EL	19.5	0.549	**1.32**	40'	EL	**1.95**	0.80	0.278	1.55	40'	EL	19.5	
		HL-93(Opr)	N/A	--	1.709	--	1.35	0.278	2.28	40'	EL	19.5	0.549	1.71	40'	EL	1.95	N/A	--	--	--	--	--	
		HS-20(Inv)	36.000	2	1.540	55.449	1.75	0.278	2.21	40'	EL	19.5	0.549	**1.54**	40'	EL	**1.95**	0.80	0.278	1.94	40'	EL	19.5	
		HS-20(Opr)	36.000	--	1.997	71.878	1.35	0.278	2.86	40'	EL	19.5	0.549	2.00	40'	EL	1.95	N/A	--	--	--	--	--	
LEGAL LOAD RATING	SV	SNSH	13.500	--	3.606	48.687	1.40	0.278	5.10	40'	EL	19.5	0.549	4.13	40'	EL	1.95	0.80	0.278	3.61	40'	EL	19.5	
		SNGARBS2	20.000	--	2.964	59.289	1.40	0.278	4.19	40'	EL	15.6	0.549	3.07	40'	EL	1.95	0.80	0.278	2.96	40'	EL	19.5	
		SNAGRIS2	22.000	--	2.906	63.929	1.40	0.278	4.09	40'	EL	15.6	0.549	2.91	40'	EL	1.95	0.80	0.278	2.92	40'	EL	15.6	
		SNCOTTS3	27.250	--	1.803	49.125	1.40	0.278	2.55	40'	EL	19.5	0.549	2.07	40'	EL	1.95	0.80	0.278	1.80	40'	EL	19.5	
		SNAGGRS4	34.925	--	1.623	56.667	1.40	0.278	2.29	40'	EL	19.5	0.549	1.82	40'	EL	1.95	0.80	0.278	1.62	40'	EL	19.5	
		SNS5A	35.550	--	1.578	56.107	1.40	0.278	2.23	40'	EL	19.5	0.549	1.90	40'	EL	1.95	0.80	0.278	1.58	40'	EL	19.5	
		SNS6A	39.950	--	1.502	59.992	1.40	0.278	2.12	40'	EL	19.5	0.549	1.77	40'	EL	1.95	0.80	0.278	1.50	40'	EL	19.5	
		SNS7B	42.000	3	1.432	60.149	1.40	0.278	2.02	40'	EL	19.5	0.549	1.81	40'	EL	1.95	0.80	0.278	**1.43**	40'	EL	**19.5**	
	TTST	TNAGRIT3	33.000	--	1.848	60.976	1.40	0.278	2.61	40'	EL	19.5	0.549	2.08	40'	EL	1.95	0.80	0.278	1.85	40'	EL	19.5	
		TNT4A	33.075	--	1.872	61.901	1.40	0.278	2.65	40'	EL	19.5	0.549	1.98	40'	EL	1.95	0.80	0.278	1.87	40'	EL	19.5	
		TNT6A	41.600	--	1.587	66.032	1.40	0.278	2.24	40'	EL	19.5	0.549	1.94	40'	EL	1.95	0.80	0.278	1.59	40'	EL	19.5	
		TNT7A	42.000	--	1.627	68.354	1.40	0.278	2.30	40'	EL	19.5	0.549	1.79	40'	EL	1.95	0.80	0.278	1.63	40'	EL	19.5	
		TNT7B	42.000	--	1.664	69.888	1.40	0.278	2.35	40'	EL	19.5	0.549	1.72	40'	EL	1.95	0.80	0.278	1.66	40'	EL	19.5	
		TNAGRIT4	43.000	--	1.619	69.61	1.40	0.278	2.28	40'	EL	15.6	0.549	1.65	40'	EL	1.95	0.80	0.278	1.62	40'	EL	19.5	
		TNAGT5A	45.000	--	1.498	67.412	1.40	0.278	2.12	40'	EL	19.5	0.549	1.71	40'	EL	1.95	0.80	0.278	1.50	40'	EL	19.5	
		TNAGT5B	45.000	--	1.455	65.486	1.40	0.278	2.06	40'	EL	19.5	0.549	1.56	40'	EL	1.95	0.80	0.278	1.46	40'	EL	19.5	

LOAD FACTORS:

DESIGN LOAD RATING FACTORS	LIMIT STATE	γ_{DC}	γ_{DW}
	STRENGTH I	1.25	1.50
	SERVICE III	1.00	1.00

NOTES:

MINIMUM RATING FACTORS ARE BASED ON THE STRENGTH I AND SERVICE III LIMIT STATES.

ALLOWABLE STRESSES FOR SERVICE III LIMIT STATE ARE AS REQUIRED FOR DESIGN.

COMMENTS:

1.
2.
3.
4.

(#) CONTROLLING LOAD RATING

(1) DESIGN LOAD RATING (HL-93)
(2) DESIGN LOAD RATING (HS-20)
(3) LEGAL LOAD RATING **
** SEE CHART FOR VEHICLE TYPE

GIRDER LOCATION

I - INTERIOR GIRDER
EL - EXTERIOR LEFT GIRDER
ER - EXTERIOR RIGHT GIRDER

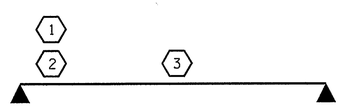

LRFR SUMMARY

FOR SPAN 'A'

PROJECT NO. BD-5101P
MARTIN COUNTY
STATION: 12+98.94 -L-

STATE OF NORTH CAROLINA
DEPARTMENT OF TRANSPORTATION
RALEIGH

STANDARD
LRFR SUMMARY FOR 40' CORED SLAB UNIT 90° SKEW
(NON-INTERSTATE TRAFFIC)

NORTH CAROLINA PROFESSIONAL SEAL 14045 ENGINEER TIMOTHY L. COGGINS
09/30/13

REVISIONS						SHEET NO.
NO.	BY:	DATE:	NO.	BY:	DATE:	S-3
1			3			TOTAL SHEETS
2			4			

ASSEMBLED BY : REZA KOUCHEKI DATE : 9/4/13
CHECKED BY : T.L. COGGINS DATE : 9/24/13
DRAWN BY : CVC 6/10
CHECKED BY : DNS 6/10

27-SEP-2013 11:02
S:\DPG1\Tim\Division 1 LIBR\BD-5101P\gkouchekI\B5101P_SD_CS.dgn
tcoggins

STD. NO. 21LRFR1_90S_40L

LOAD AND RESISTANCE FACTOR RATING (LRFD) SUMMARY FOR PRESTRESSED CONCRETE GIRDERS

LEVEL		VEHICLE	WEIGHT (W) (TONS)	CONTROLLING LOAD RATING	MINIMUM RATING FACTORS (RF)	TONS = W X RF	STRENGTH I LIMIT STATE											SERVICE III LIMIT STATE						COMMENT NUMBER
								MOMENT					SHEAR						MOMENT					
							LIVELOAD FACTORS	DISTRIBUTION FACTORS (DF)	RATING FACTOR	SPAN	GIRDER LOCATION	DISTANCE FROM LEFT END OF SPAN (ft)	DISTRIBUTION FACTORS (DF)	RATING FACTOR	SPAN	GIRDER LOCATION	DISTANCE FROM LEFT END OF SPAN (ft)	LIVELOAD FACTORS	DISTRIBUTION FACTORS (DF)	RATING FACTOR	SPAN	GIRDER LOCATION	DISTANCE FROM LEFT END OF SPAN (ft)	
DESIGN LOAD RATING		HL-93(Inv)	N/A	(1)	1.394	--	1.75	0.276	1.57	50'	EL	24.5	0.531	**1.39**	50'	EL	**2.45**	0.80	0.276	1.44	50'	EL	24.5	
		HL-93(Opr)	N/A	--	1.807	--	1.35	0.276	2.03	50'	EL	24.5	0.531	1.81	50'	EL	2.45	N/A	--	--	--	--	--	
		HS-20(Inv)	36.000	(2)	1.667	60.007	1.75	0.276	1.95	50'	EL	24.5	0.531	**1.67**	50'	EL	**2.45**	0.80	0.276	1.79	50'	EL	24.5	
		HS-20(Opr)	36.000	--	2.161	77.787	1.35	0.276	2.52	50'	EL	24.5	0.531	2.16	50'	EL	2.45	N/A	--	--	--	--	--	
LEGAL LOAD RATING	SV	SNSH	13.500	--	3.635	49.079	1.40	0.276	4.95	50'	EL	24.5	0.531	4.70	50'	EL	2.45	0.80	0.276	3.64	50'	EL	24.5	
		SNGARBS2	20.000	--	2.871	57.420	1.40	0.276	3.91	50'	EL	24.5	0.531	3.42	50'	EL	2.45	0.80	0.276	2.87	50'	EL	24.5	
		SNAGRIS2	22.000	--	2.778	61.109	1.40	0.276	3.78	50'	EL	19.6	0.531	3.21	50'	EL	2.45	0.80	0.276	2.78	50'	EL	24.5	
		SNCOTTS3	27.250	--	1.814	49.418	1.40	0.276	2.47	50'	EL	24.5	0.531	2.36	50'	EL	2.45	0.80	0.276	1.81	50'	EL	24.5	
		SNAGGRS4	34.925	--	1.577	55.063	1.40	0.276	2.15	50'	EL	24.5	0.531	2.01	50'	EL	2.45	0.80	0.276	1.58	50'	EL	24.5	
		SNS5A	35.550	--	1.537	54.657	1.40	0.276	2.09	50'	EL	24.5	0.531	2.07	50'	EL	2.45	0.80	0.276	1.54	50'	EL	24.5	
		SNS6A	39.950	--	1.438	57.430	1.40	0.276	1.96	50'	EL	24.5	0.531	1.91	50'	EL	2.45	0.80	0.276	1.44	50'	EL	24.5	
		SNS7B	42.000	--	1.370	57.540	1.40	0.276	1.87	50'	EL	24.5	0.531	1.91	50'	EL	2.45	0.80	0.276	1.37	50'	EL	24.5	
	TTST	TNAGRIT3	33.000	--	1.761	58.118	1.40	0.276	2.40	50'	EL	24.5	0.531	2.25	50'	EL	2.45	0.80	0.276	1.76	50'	EL	24.5	
		TNT4A	33.075	--	1.777	58.759	1.40	0.276	2.42	50'	EL	24.5	0.531	2.17	50'	EL	2.45	0.80	0.276	1.78	50'	EL	24.5	
		TNT6A	41.600	--	1.480	61.558	1.40	0.276	2.01	50'	EL	24.5	0.531	2.08	50'	EL	2.45	0.80	0.276	1.48	50'	EL	24.5	
		TNT7A	42.000	--	1.502	63.087	1.40	0.276	2.05	50'	EL	24.5	0.531	1.94	50'	EL	2.45	0.80	0.276	1.50	50'	EL	24.5	
		TNT7B	42.000	--	1.566	65.773	1.40	0.276	2.13	50'	EL	24.5	0.531	1.84	50'	EL	2.45	0.80	0.276	1.57	50'	EL	24.5	
		TNAGRIT4	43.000	--	1.486	63.902	1.40	0.276	2.02	50'	EL	24.5	0.531	1.77	50'	EL	2.45	0.80	0.276	1.49	50'	EL	24.5	
		TNAGT5A	45.000	--	1.388	62.470	1.40	0.276	1.89	50'	EL	24.5	0.531	1.80	50'	EL	2.45	0.80	0.276	1.39	50'	EL	24.5	
		TNAGT5B	45.000	(3)	1.360	61.206	1.40	0.276	1.85	50'	EL	24.5	0.531	1.68	50'	EL	2.45	0.80	0.276	**1.36**	50'	EL	**24.5**	

LOAD FACTORS:

DESIGN LOAD RATING FACTORS	LIMIT STATE	γ_{DC}	γ_{DW}
	STRENGTH I	1.25	1.50
	SERVICE III	1.00	1.00

NOTES:

MINIMUM RATING FACTORS ARE BASED ON THE STRENGTH I AND SERVICE III LIMIT STATES.

ALLOWABLE STRESSES FOR SERVICE III LIMIT STATE ARE AS REQUIRED FOR DESIGN.

COMMENTS:

1.
2.
3.
4.

(#) CONTROLLING LOAD RATING

(1) DESIGN LOAD RATING (HL-93)

(2) DESIGN LOAD RATING (HS-20)

(3) LEGAL LOAD RATING **

** SEE CHART FOR VEHICLE TYPE

GIRDER LOCATION

I - INTERIOR GIRDER
EL - EXTERIOR LEFT GIRDER
ER - EXTERIOR RIGHT GIRDER

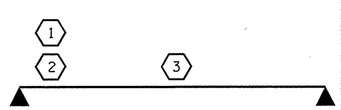

LRFR SUMMARY

FOR SPAN 'B'

PROJECT NO. BD-5101P

MARTIN COUNTY

STATION: 12+98.94 -L-

STATE OF NORTH CAROLINA
DEPARTMENT OF TRANSPORTATION
RALEIGH

STANDARD

LRFR SUMMARY FOR 50' CORED SLAB UNIT 90° SKEW (NON-INTERSTATE TRAFFIC)

NORTH CAROLINA PROFESSIONAL SEAL 14045 ENGINEER TIMOTHY L. COGGINS

09/30/13

REVISIONS						SHEET NO.
NO.	BY:	DATE:	NO.	BY:	DATE:	S-4
1			3			TOTAL SHEETS
2			4			

ASSEMBLED BY : REZA KOUCHEKI DATE : 9/4/13
CHECKED BY : T.L. COGGINS DATE : 9/24/13

DRAWN BY : CVC 6/10
CHECKED BY : DNS 6/10

27-SEP-2013 11:01
S:\DPG1\Tfm\Division 1 LIBR\BD-5101P\gkoucheki\B5101P_SD_CS.dgn
tcoggins

STD. NO. 21LRFR1_90S_50L

LOAD AND RESISTANCE FACTOR RATING (LRFD) SUMMARY FOR PRESTRESSED CONCRETE GIRDERS

LEVEL		VEHICLE	WEIGHT (W) (TONS)	CONTROLLING LOAD RATING	MINIMUM RATING FACTORS (RF)	TONS = W X RF	STRENGTH I LIMIT STATE											SERVICE III LIMIT STATE						COMMENT NUMBER
							LIVELOAD FACTORS	MOMENT					SHEAR					LIVELOAD FACTORS	MOMENT					
								DISTRIBUTION FACTORS (DF)	RATING FACTOR	SPAN	GIRDER LOCATION	DISTANCE FROM LEFT END OF SPAN (ft)	DISTRIBUTION FACTORS (DF)	RATING FACTOR	SPAN	GIRDER LOCATION	DISTANCE FROM LEFT END OF SPAN (ft)		DISTRIBUTION FACTORS (DF)	RATING FACTOR	SPAN	GIRDER LOCATION	DISTANCE FROM LEFT END OF SPAN (ft)	
DESIGN LOAD RATING		HL-93(Inv)	N/A	1	1.088	--	1.75	0.277	1.34	45′	EL	22	0.539	1.23	45′	EL	2.2	0.80	0.277	**1.09**	45′	EL	**22**	
DESIGN LOAD RATING		HL-93(Opr)	N/A	--	1.590	--	1.35	0.277	1.74	45′	EL	22	0.539	1.59	45′	EL	2.2	N/A	--	--	--	--	--	
DESIGN LOAD RATING		HS-20(Inv)	36.000	2	1.336	48.104	1.75	0.277	1.65	45′	EL	22	0.539	1.45	45′	EL	2.2	0.80	0.277	**1.34**	45′	EL	**22**	
DESIGN LOAD RATING		HS-20(Opr)	36.000	--	1.882	67.763	1.35	0.277	2.14	45′	EL	22	0.539	1.88	45′	EL	2.2	N/A	--	--	--	--	--	
LEGAL LOAD RATING	SV	SNSH	13.500	--	2.611	35.252	1.40	0.277	4.02	45′	EL	22	0.539	4.01	45′	EL	2.2	0.80	0.277	2.61	45′	EL	22	
LEGAL LOAD RATING	SV	SNGARBS2	20.000	--	2.108	42.166	1.40	0.277	3.25	45′	EL	22	0.539	2.94	45′	EL	2.2	0.80	0.277	2.11	45′	EL	22	
LEGAL LOAD RATING	SV	SNAGRIS2	22.000	--	2.067	45.466	1.40	0.277	3.15	45′	EL	17.6	0.539	2.77	45′	EL	2.2	0.80	0.277	2.07	45′	EL	22	
LEGAL LOAD RATING	SV	SNCOTTS3	27.250	--	1.304	35.527	1.40	0.277	2.01	45′	EL	22	0.539	2.01	45′	EL	2.2	0.80	0.277	1.30	45′	EL	22	
LEGAL LOAD RATING	SV	SNAGGRS4	34.925	--	1.150	40.181	1.40	0.277	1.77	45′	EL	22	0.539	1.74	45′	EL	2.2	0.80	0.277	1.15	45′	EL	22	
LEGAL LOAD RATING	SV	SNS5A	35.550	--	1.121	39.841	1.40	0.277	1.73	45′	EL	22	0.539	1.79	45′	EL	2.2	0.80	0.277	1.12	45′	EL	22	
LEGAL LOAD RATING	SV	SNS6A	39.950	--	1.056	42.175	1.40	0.277	1.63	45′	EL	22	0.539	1.67	45′	EL	2.2	0.80	0.277	1.06	45′	EL	22	
LEGAL LOAD RATING	SV	SNS7B	42.000	3	1.006	42.268	1.40	0.277	1.55	45′	EL	22	0.539	1.68	45′	EL	2.2	0.80	0.277	**1.01**	45′	EL	**22**	
LEGAL LOAD RATING	TTST	TNAGRIT3	33.000	--	1.296	42.759	1.40	0.277	2.00	45′	EL	22	0.539	1.96	45′	EL	2.2	0.80	0.277	1.30	45′	EL	22	
LEGAL LOAD RATING	TTST	TNT4A	33.075	--	1.309	43.305	1.40	0.277	2.02	45′	EL	22	0.539	1.88	45′	EL	2.2	0.80	0.277	1.31	45′	EL	22	
LEGAL LOAD RATING	TTST	TNT6A	41.600	--	1.099	45.712	1.40	0.277	1.69	45′	EL	22	0.539	1.83	45′	EL	2.2	0.80	0.277	1.10	45′	EL	22	
LEGAL LOAD RATING	TTST	TNT7A	42.000	--	1.120	47.043	1.40	0.277	1.73	45′	EL	22	0.539	1.69	45′	EL	2.2	0.80	0.277	1.12	45′	EL	22	
LEGAL LOAD RATING	TTST	TNT7B	42.000	--	1.166	48.975	1.40	0.277	1.80	45′	EL	22	0.539	1.61	45′	EL	2.2	0.80	0.277	1.17	45′	EL	22	
LEGAL LOAD RATING	TTST	TNAGRIT4	43.000	--	1.111	47.757	1.40	0.277	1.71	45′	EL	22	0.539	1.55	45′	EL	2.2	0.80	0.277	1.11	45′	EL	22	
LEGAL LOAD RATING	TTST	TNAGT5A	45.000	--	1.033	46.505	1.40	0.277	1.59	45′	EL	22	0.539	1.59	45′	EL	2.2	0.80	0.277	1.03	45′	EL	22	
LEGAL LOAD RATING	TTST	TNAGT5B	45.000	--	1.009	45.408	1.40	0.277	1.56	45′	EL	22	0.539	1.47	45′	EL	2.2	0.80	0.277	1.01	45′	EL	22	

LOAD FACTORS:

DESIGN LOAD RATING FACTORS	LIMIT STATE	γ_{DC}	γ_{DW}
	STRENGTH I	1.25	1.50
	SERVICE III	1.00	1.00

NOTES:

MINIMUM RATING FACTORS ARE BASED ON THE STRENGTH I AND SERVICE III LIMIT STATES.

ALLOWABLE STRESSES FOR SERVICE III LIMIT STATE ARE AS REQUIRED FOR DESIGN.

COMMENTS:

1.
2.
3.
4.

CONTROLLING LOAD RATING

1 DESIGN LOAD RATING (HL-93)
2 DESIGN LOAD RATING (HS-20)
3 LEGAL LOAD RATING **
** SEE CHART FOR VEHICLE TYPE

GIRDER LOCATION

I - INTERIOR GIRDER
EL - EXTERIOR LEFT GIRDER
ER - EXTERIOR RIGHT GIRDER

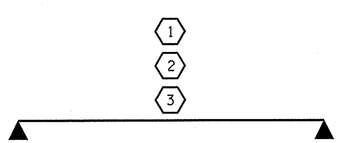

LRFR SUMMARY

FOR SPAN 'C'

PROJECT NO. BD-5101P
MARTIN COUNTY
STATION: 12+98.94 -L-

STATE OF NORTH CAROLINA
DEPARTMENT OF TRANSPORTATION
RALEIGH

STANDARD
LRFR SUMMARY FOR
45′ CORED SLAB UNIT
90° SKEW
(NON-INTERSTATE TRAFFIC)

NORTH CAROLINA PROFESSIONAL SEAL 14045 ENGINEER TIMOTHY L. COGGINS
09/30/13

REVISIONS						SHEET NO.
NO.	BY:	DATE:	NO.	BY:	DATE:	S-5
1			3			TOTAL SHEETS
2			4			

ASSEMBLED BY : REZA KOUCHEKI DATE : 9/4/13
CHECKED BY : T.L. COGGINS DATE : 9/24/13
DRAWN BY : CVC 6/10
CHECKED BY : DNS 6/10

27-SEP-2013 11:01
S:\DPGI\Tim\Division 1 LIBR\BD-5101P\gkoucheki\B5101P_SD_CS.dgn
tcoggins

STD. NO. 21LRFR1_90S_45L

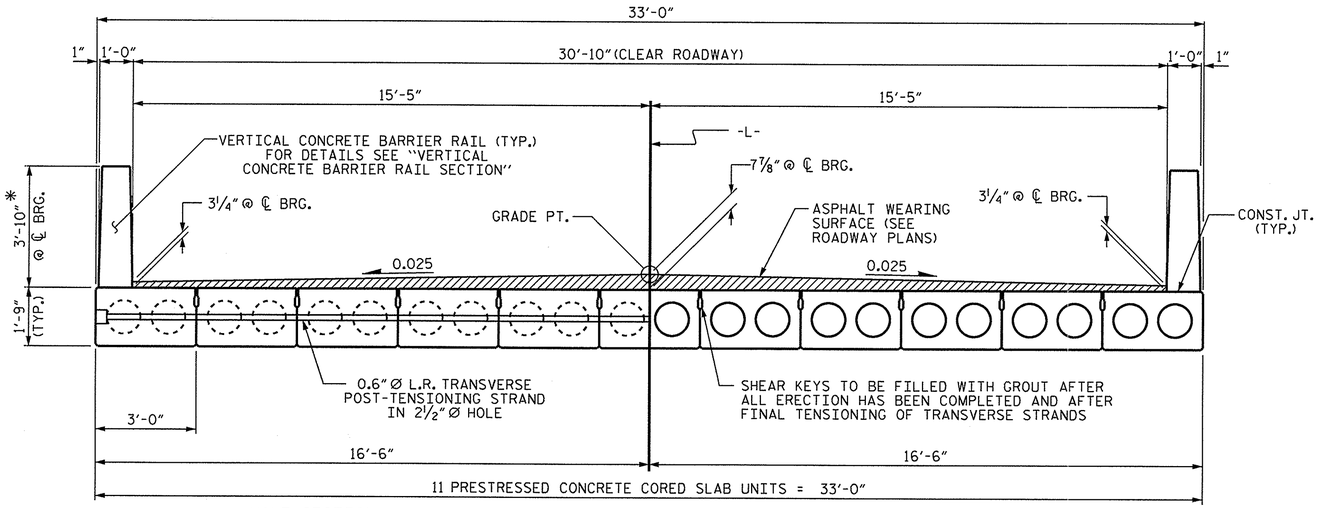

HALF SECTION
AT INTERMEDIATE DIAPHRAGMS

HALF SECTION
THROUGH VOIDS

TYPICAL SECTION

* - THE MAXIMUM BARRIER RAIL HEIGHT AND ASPHALT THICKNESS IS SHOWN. THE HEIGHT OF THE BARRIER RAIL AND ASPHALT THICKNESS VARIES WHILE THE TOP OF THE BARRIER RAIL FOLLOWS THE PROFILE OF THE GUTTERLINE. FOR RAIL HEIGHT DETAILS AND ASPHALT THICKNESS SEE THE "VERTICAL CONCRETE BARRIER RAIL SECTION" DETAIL.

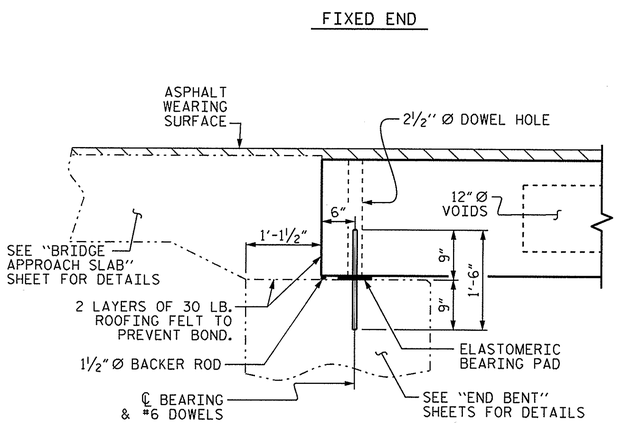

SECTION AT END BENT

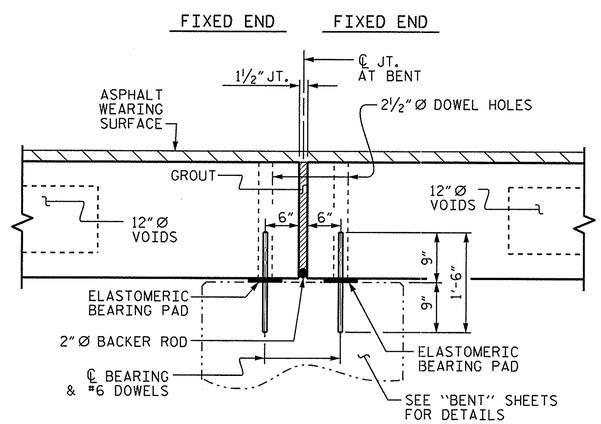

SECTION AT BENT

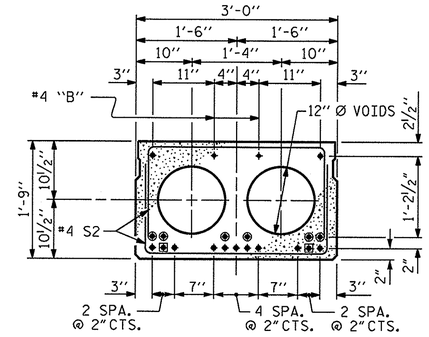

INTERIOR SLAB SECTION
(40' & 45' UNIT)
(13 STRANDS REQUIRED)

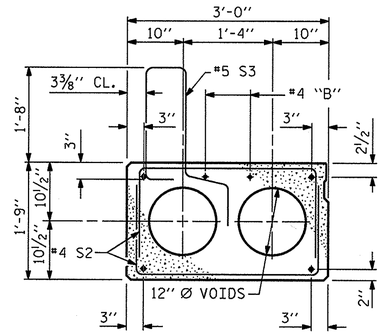

EXT. SLAB SECTION

(FOR PRESTRESSED STRAND LAYOUT, SEE INTERIOR SLAB SECTION.)

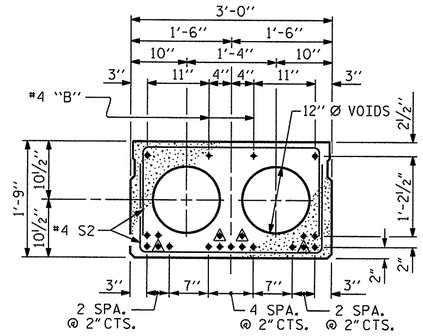

INTERIOR SLAB SECTION
(50' UNIT)
(19 STRANDS REQUIRED)

0.6" Ø LOW RELAXATION STRAND LAYOUT

▲ BOND SHALL BE BROKEN ON THESE STRANDS FOR A DISTANCE OF 6'-0" FROM END OF CORED SLAB UNIT. SEE STANDARD SPECIFICATIONS, ARTICLE 1078-7.

■ BOND SHALL BE BROKEN ON THESE STRANDS FOR A DISTANCE OF 2'-0" FROM END OF CORED SLAB UNIT. SEE STANDARD SPECIFICATIONS, ARTICLE 1078-7.

◉ OPTIONAL FULL LENGTH DEBONDED STRANDS. THESE STRANDS ARE NOT REQUIRED. IF THE FABRICATOR CHOOSES TO INCLUDE THESE STRANDS IN THE CORED SLAB UNIT, THE STRANDS SHALL BE DEBONDED FOR THE FULL LENGTH OF THE UNIT AT NO ADDITIONAL COST. SEE STANDARD SPECIFICATIONS, ARTICLE 1078-7.

DEBONDING LEGEND

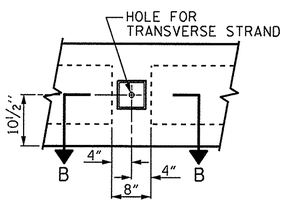

ELEVATION VIEW

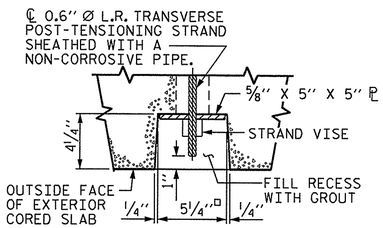

SECTION B-B

GROUTED RECESS AT END OF POST-TENSIONED STRAND OF CORED SLABS

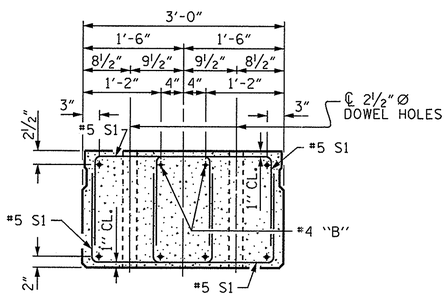

END ELEVATION

SHOWING PLACEMENT OF DOUBLE STIRRUPS AND LOCATION OF DOWEL HOLES. (STRAND LAYOUT NOT SHOWN.) INTERIOR SLAB UNIT SHOWN-EXTERIOR SLAB UNIT SIMILAR EXCEPT SHEAR KEY LOCATION.

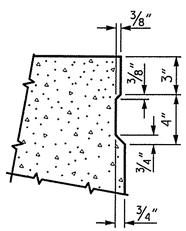

SHEAR KEY DETAIL

NOTE: OMIT SHEAR KEY ON OUTSIDE FACE OF EXTERIOR CORED SLABS.

PROJECT NO. BD-5101P
MARTIN COUNTY
STATION: 12+98.94 -L-

SHEET 1 OF 5

STATE OF NORTH CAROLINA
DEPARTMENT OF TRANSPORTATION
RALEIGH

STANDARD
3'-0" X 1'-9"
PRESTRESSED CONCRETE CORED SLAB UNIT
90° SKEW

NORTH CAROLINA PROFESSIONAL SEAL 14045 ENGINEER TIMOTHY L. COGGINS
09/30/13

REVISIONS						SHEET NO.
NO.	BY:	DATE:	NO.	BY:	DATE:	S-6
1			3			TOTAL SHEETS
2			4			

ASSEMBLED BY : REZA KOUCHEKI DATE : 9/03/13
CHECKED BY : T.L. COGGINS DATE : 9/24/13
DRAWN BY : DGE 5/09
CHECKED BY : BCH 6/09
REV. 12/11 MAA/AAC

27-SEP-2013 11:00
S:\DPGI\Tim\Division 1 LIBR\BD-5101P\gkoucheki\B5101P_SD_CS.dgn
tcoggins

STD. NO. 21" PCS2_33_90S

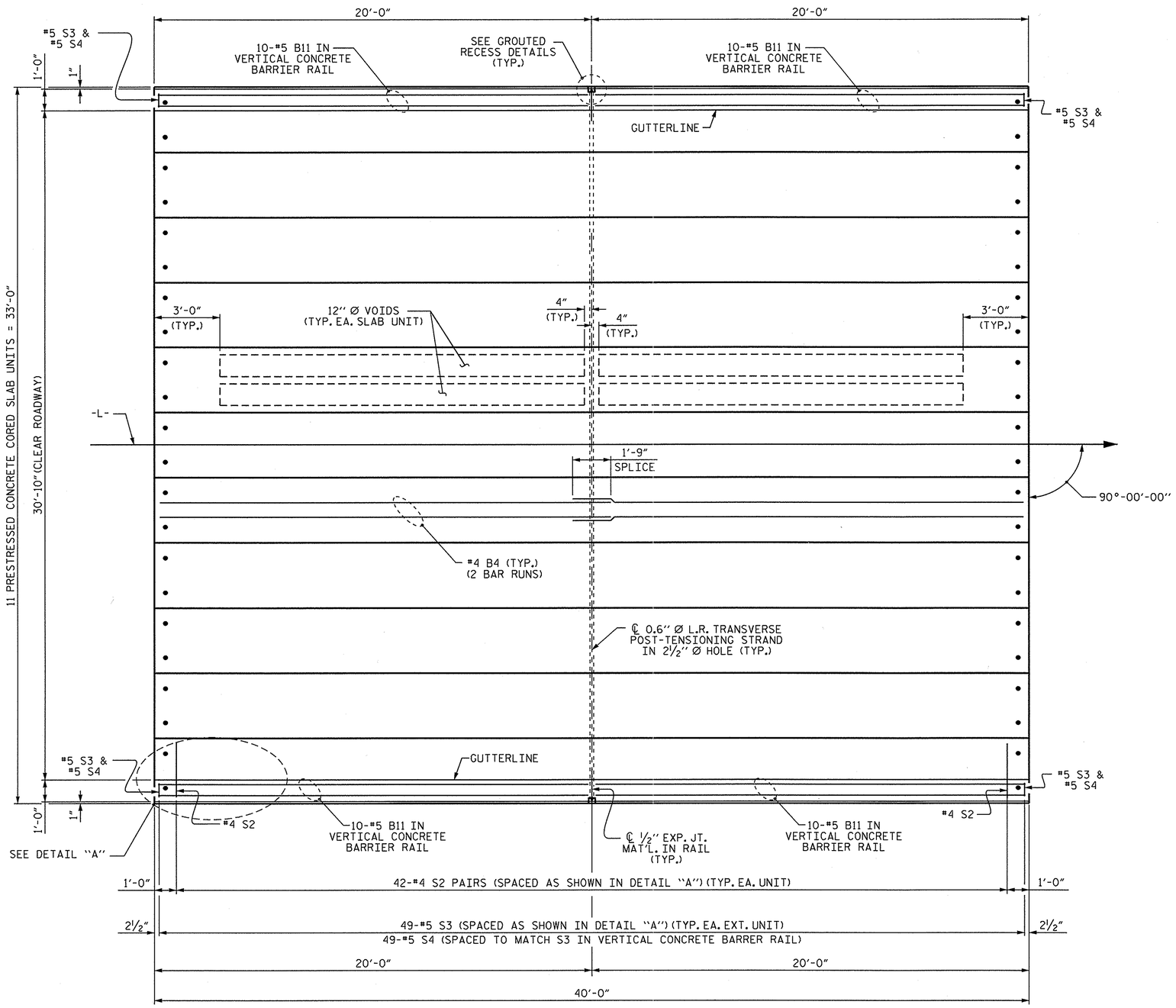

PLAN OF UNIT

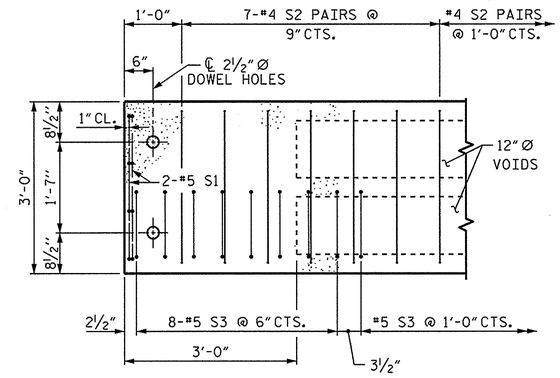

DETAIL "A"

NOTE: EXTERIOR UNIT SHOWN - INTERIOR UNIT SIMILAR EXCEPT OMIT #5 S3 BARS.

PROJECT NO. BD-5101P

MARTIN COUNTY

STATION: 12+98.94 -L-

SHEET 2 OF 5

STATE OF NORTH CAROLINA
DEPARTMENT OF TRANSPORTATION
RALEIGH

PLAN OF 40' UNIT
30'-10" CLEAR ROADWAY
90° SKEW

NORTH CAROLINA PROFESSIONAL SEAL 14045 ENGINEER TIMOTHY L. COGGINS

09/30/13

REVISIONS						SHEET NO.
NO.	BY:	DATE:	NO.	BY:	DATE:	S-7
1			3			TOTAL SHEETS
2			4			

ASSEMBLED BY : REZA KOUCHEKI DATE : 9/03/13
CHECKED BY : T.L. COGGINS DATE : 9/24/13
DRAWN BY : DGE 3/09
CHECKED BY : BCH 3/09
REV. 12/5/11 MAA/AAC

27-SEP-2013 11:00
S:\DPG\Tim\Division 1 LIBR\BD-5101P\gkoucheki\B5101P_SD_CS.dgn
tcoggins

STD. NO. 21" PCS_33_90S_40L

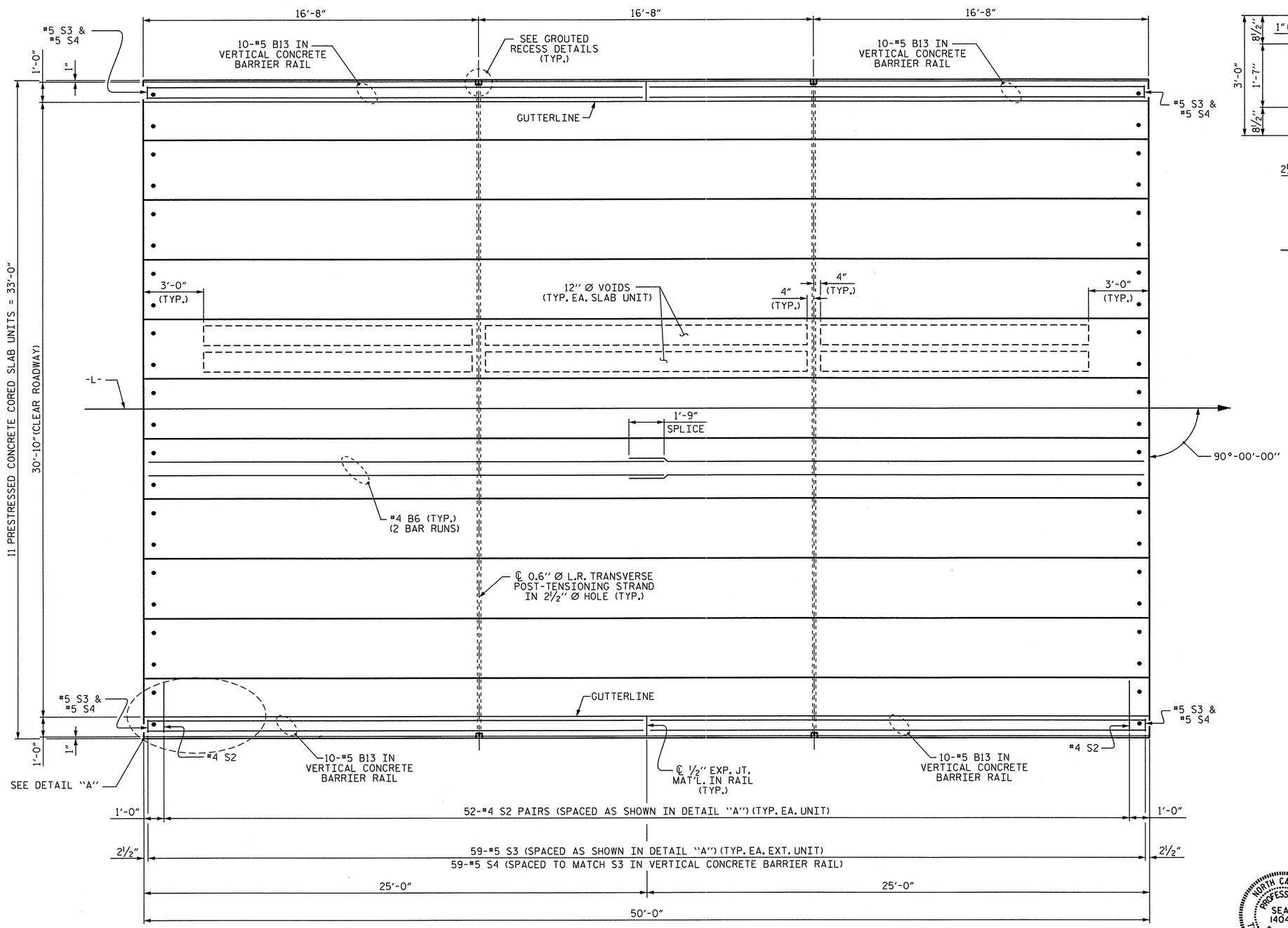

PLAN OF UNIT

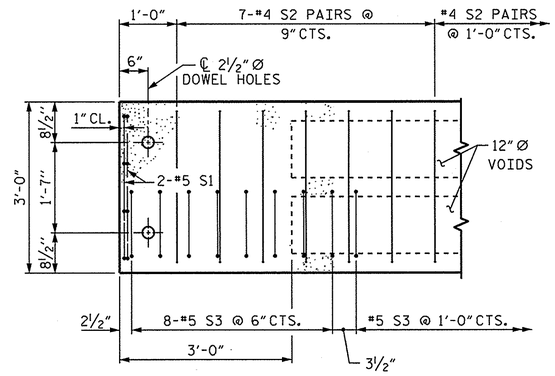

DETAIL "A"

NOTE: EXTERIOR UNIT SHOWN - INTERIOR UNIT SIMILAR EXCEPT OMIT #5 S3 BARS.

PROJECT NO. BD-5101P

MARTIN COUNTY

STATION: 12+98.94 -L-

SHEET 3 OF 5

STATE OF NORTH CAROLINA
DEPARTMENT OF TRANSPORTATION
RALEIGH

PLAN OF 50' UNIT
30'-10" CLEAR ROADWAY
90° SKEW

NORTH CAROLINA PROFESSIONAL SEAL 14045 ENGINEER TIMOTHY L. COGGINS
09/30/13

REVISIONS								SHEET NO.
NO.	BY:	DATE:	NO.	BY:	DATE:			S-8
1			3					TOTAL SHEETS
2			4					

ASSEMBLED BY : REZA KOUCHEKI		DATE : 9/03/13	
CHECKED BY : T.L. COGGINS		DATE : 9/25/13	
DRAWN BY : DGE	3/09	REV. 12/5/11	MAA/AAC
CHECKED BY : BCH	3/09		

27-SEP-2013 10:59
S:\DPG1\Tlm\Division 1 LIBR\BD-5101P\gkoucheki\B5101P_SD_CS.dgn
tcoggins

STD. NO. 21" PCS_33_90S_50L

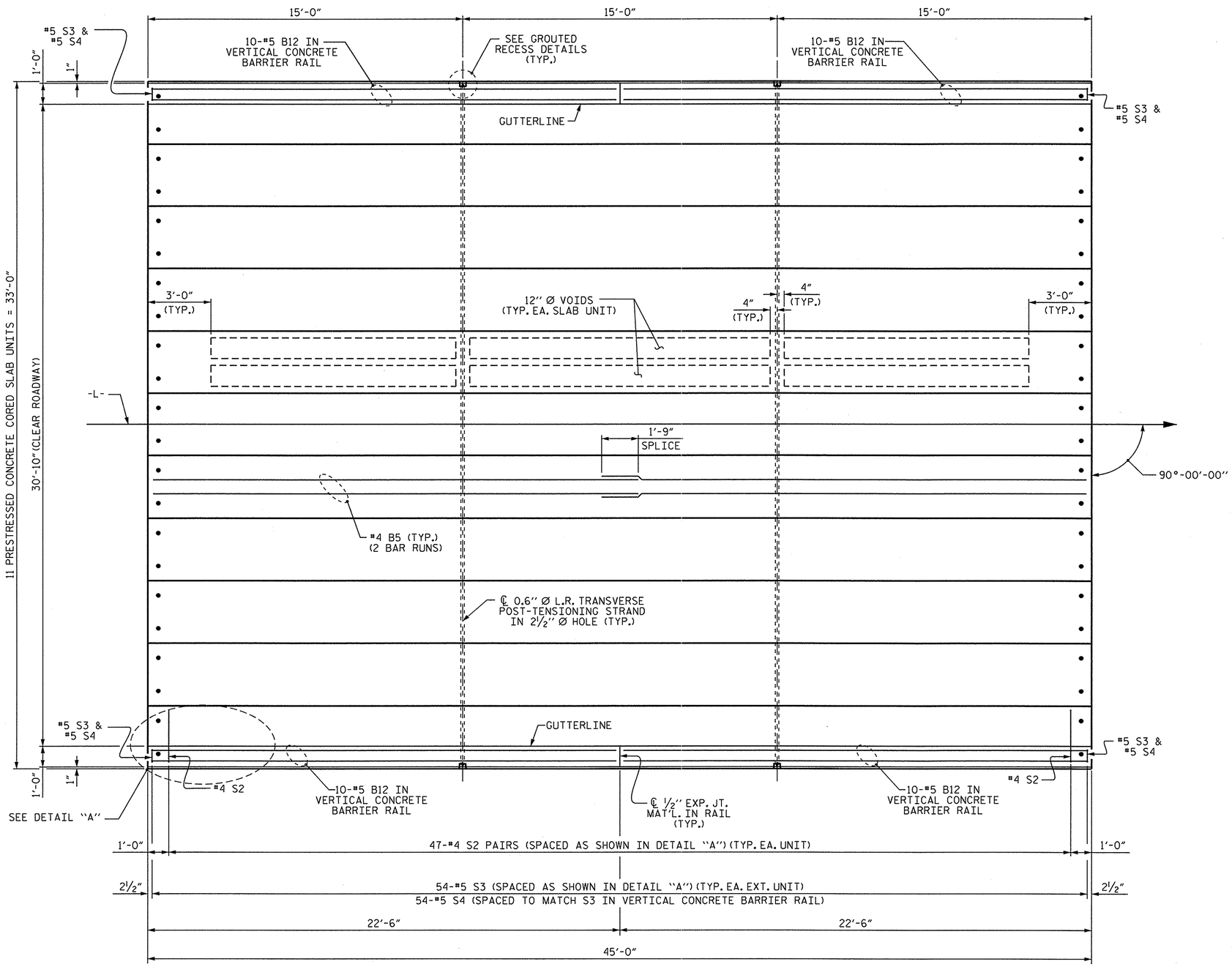

PLAN OF UNIT

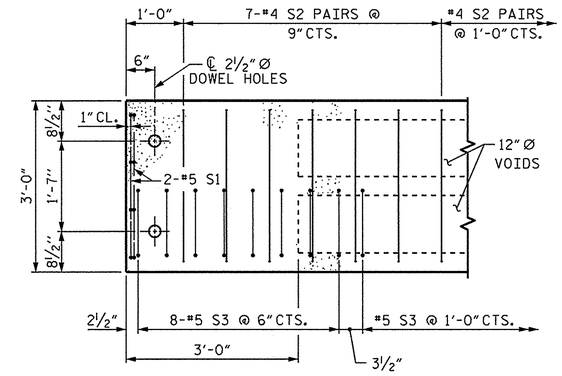

DETAIL "A"

NOTE: EXTERIOR UNIT SHOWN - INTERIOR UNIT SIMILAR EXCEPT OMIT #5 S3 BARS.

PROJECT NO. BD-5101P

MARTIN COUNTY

STATION: 12+98.94 -L-

SHEET 4 OF 5

STATE OF NORTH CAROLINA
DEPARTMENT OF TRANSPORTATION
RALEIGH

PLAN OF 45' UNIT 30'-10" CLEAR ROADWAY 90° SKEW

NORTH CAROLINA PROFESSIONAL SEAL 14045 ENGINEER TIMOTHY L. COGGINS
09/30/13

REVISIONS							
NO.	BY:	DATE:	NO.	BY:	DATE:	SHEET NO. S-9
1			3			TOTAL SHEETS
2			4			

ASSEMBLED BY : REZA KOUCHEKI DATE : 9/03/13
CHECKED BY : T.L. COGGINS DATE : 9/25/13
DRAWN BY : DGE 3/09
CHECKED BY : BCH 3/09
REV. 12/5/11 MAA/AAC

27-SEP-2013 10:59
S:\DPGI\Tim\Division 1 LIBR\BD-5101P\gkoucheki\B5101P_SD_CS.dgn
tcoggins

STD. NO. 21" PCS_33_90S_45L

BILL OF MATERIAL FOR VERTICAL CONCRETE BARRIER RAIL

BAR	BARS PER PAIR OF EXTERIOR UNITS	TOTAL NO.	SIZE	TYPE	LENGTH	WEIGHT
	40' UNIT					
✻B11	40	40	#5	STR	19'-7"	817
✻S4	98	98	#5	2	7'-2"	733
✻EPOXY COATED REINFORCING STEEL				LBS.		1550
CLASS AA CONCRETE				CU.YDS.		10.5
TOTAL VERTICAL CONCRETE BARRIER RAIL				LN. FT.		80.12

BILL OF MATERIAL FOR VERTICAL CONCRETE BARRIER RAIL

BAR	BARS PER PAIR OF EXTERIOR UNITS	TOTAL NO.	SIZE	TYPE	LENGTH	WEIGHT
	45' UNIT					
✻B12	40	40	#5	STR	22'-1"	921
✻S4	108	108	#5	2	7'-2"	807
✻EPOXY COATED REINFORCING STEEL				LBS.		1728
CLASS AA CONCRETE				CU.YDS.		11.8
TOTAL VERTICAL CONCRETE BARRIER RAIL				LN. FT.		90.13

BILL OF MATERIAL FOR VERTICAL CONCRETE BARRIER RAIL

BAR	BARS PER PAIR OF EXTERIOR UNITS	TOTAL NO.	SIZE	TYPE	LENGTH	WEIGHT
	50' UNIT					
✻B13	40	40	#5	STR	24'-7"	1026
✻S4	118	118	#5	2	7'-2"	882
✻EPOXY COATED REINFORCING STEEL				LBS.		1908
CLASS AA CONCRETE				CU.YDS.		13.1
TOTAL VERTICAL CONCRETE BARRIER RAIL				LN. FT.		100.25

BILL OF MATERIAL FOR ONE 40' CORED SLAB UNIT

BAR	NUMBER	SIZE	TYPE	EXTERIOR UNIT LENGTH	EXTERIOR UNIT WEIGHT	INTERIOR UNIT LENGTH	INTERIOR UNIT WEIGHT
B4	4	#4	STR	20'-9"	55	20'-9"	55
S1	8	#5	3	4'-3"	35	4'-3"	35
S2	84	#4	3	5'-4"	299	5'-4"	299
✻S3	49	#5	1	6'-2"	315		
REINFORCING STEEL			LBS.		389		389
✻EPOXY COATED REINFORCING STEEL			LBS.		315		
6500 P.S.I. CONCRETE			CU. YDS.		5.8		5.8
0.6" Ø L.R. STRANDS			No.		13		13

BILL OF MATERIAL FOR ONE 45' CORED SLAB UNIT

BAR	NUMBER	SIZE	TYPE	EXTERIOR UNIT LENGTH	EXTERIOR UNIT WEIGHT	INTERIOR UNIT LENGTH	INTERIOR UNIT WEIGHT
B5	4	#4	STR	23'-3"	62	23'-3"	62
S1	8	#5	3	4'-3"	35	4'-3"	35
S2	94	#4	3	5'-4"	335	5'-4"	335
✻S3	54	#5	1	6'-2"	347		
REINFORCING STEEL			LBS.		432		432
✻EPOXY COATED REINFORCING STEEL			LBS.		347		
6500 P.S.I. CONCRETE			CU. YDS.		6.5		6.5
0.6" Ø L.R. STRANDS			No.		13		13

BAR TYPES

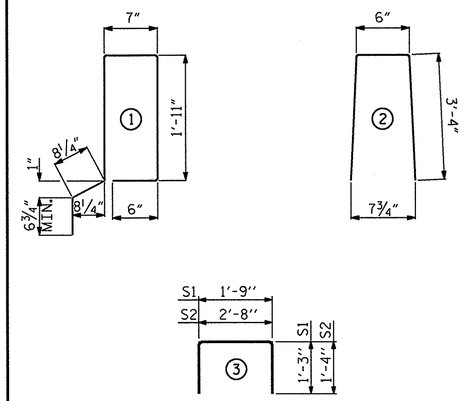

ALL BAR DIMENSIONS ARE OUT TO OUT

NOTES

ALL PRESTRESSING STRANDS SHALL BE 7-WIRE LOW RELAXATION GRADE 270 STRANDS AND SHALL CONFORM TO AASHTO M203 EXCEPT FOR SAMPLING REQUIREMENTS WHICH SHALL BE IN ACCORDANCE WITH THE STANDARD SPECIFICATIONS.

ALL REINFORCING STEEL CAST WITH THE CORED SLAB SECTIONS SHALL BE GRADE 60 AND SHALL BE INCLUDED IN THE UNIT PRICE BID FOR PRESTRESSED CONCRETE CORED SLABS.

RECESSES FOR TRANSVERSE STRANDS SHALL BE GROUTED AFTER THE TENSIONING OF THE STRANDS.

THE 2½" Ø DOWEL HOLES AT FIXED ENDS OF SLAB SECTIONS SHALL BE FILLED WITH NON-SHRINK GROUT.

THE BACKER RODS SHALL CONFORM TO THE REQUIREMENTS OF TYPE M BOND BREAKER. SEE SECTION 1028 OF THE STANDARD SPECIFICATIONS.

WHEN CORED SLABS ARE CAST, AN INTERNAL HOLD-DOWN SYSTEM SHALL BE EMPLOYED TO PREVENT VOIDS FROM RISING OR MOVING SIDEWAYS. AT LEAST SIX WEEKS PRIOR TO CASTING CORED SLABS, THE CONTRACTOR SHALL SUBMIT TO THE ENGINEER FOR REVIEW AND COMMENT, DETAILED DRAWINGS OF THE PROPOSED HOLD-DOWN SYSTEM. IN ADDITION TO STRUCTURAL DETAILS, LOCATION AND SPACING OF THE HOLD-DOWNS SHALL BE INDICATED.

ALL REINFORCING STEEL IN THE VERTICAL CONCRETE BARRIER RAIL SHALL BE EPOXY COATED.

PRESTRESSING STRANDS SHALL BE CUT FLUSH WITH THE CORED SLAB UNIT ENDS.

APPLY EPOXY PROTECTIVE COATING TO CORED SLAB UNIT ENDS.

GROOVED CONTRACTION JOINTS, ½" IN DEPTH, SHALL BE TOOLED IN ALL EXPOSED FACES OF THE BARRIER RAIL AND IN ACCORDANCE WITH ARTICLE 825-10(B) OF THE STANDARD SPECIFICATIONS. A CONTRACTION JOINT SHALL BE LOCATED AT EACH THIRD POINT BETWEEN BARRIER RAIL EXPANSION JOINTS. ONLY ONE CONTRACTION JOINT IS REQUIRED AT MIDPOINT OF BARRIER RAIL SEGMENTS LESS THAN 20 FEET IN LENGTH AND NO CONTRACTION JOINTS ARE REQUIRED FOR THOSE SEGMENTS LESS THAN 10 FEET IN LENGTH.

TRANSVERSE POST TENSIONING OF THE CORED SLAB UNITS SHALL BE DONE IN ACCORDANCE WITH THE STANDARD SPECIFICATIONS.

THE TRANSFER OF LOAD FROM THE ANCHORAGES TO THE CORED SLAB UNIT SHALL BE DONE WHEN THE CONCRETE HAS REACHED A COMPRESSIVE STRENGTH OF NOT LESS THAN THE REQUIRED STRENGTH SHOWN IN THE "CONCRETE RELEASE STRENGTH" TABLE.

FOR GROUT FOR STRUCTURES, SEE SPECIAL PROVISIONS.

DEAD LOAD DEFLECTION AND CAMBER

	3'-0" x 1'-9" 0.6" Ø L.R. STRAND
40' & 45' CORED SLAB UNIT	
CAMBER (SLAB ALONE IN PLACE)	1¼" ↑
DEFLECTION DUE TO SUPERIMPOSED DEAD LOAD✻✻	⅛" ↓
FINAL CAMBER	1⅛" ↑

DEAD LOAD DEFLECTION AND CAMBER

	3'-0" x 1'-9" 0.6" Ø L.R. STRAND
50' CORED SLAB UNIT	
CAMBER (SLAB ALONE IN PLACE)	2½" ↑
DEFLECTION DUE TO SUPERIMPOSED DEAD LOAD✻✻	¼" ↓
FINAL CAMBER	2¼" ↑

✻✻ INCLUDES FUTURE WEARING SURFACE

GRADE 270 STRANDS

	0.6" Ø L.R.
AREA (SQUARE INCHES)	0.217
ULTIMATE STRENGTH (LBS. PER STRAND)	58,600
APPLIED PRESTRESS (LBS. PER STRAND)	43,950

CONCRETE RELEASE STRENGTH

UNIT	PSI
40' & 45' UNITS	4000
50' UNITS	4900

GUTTERLINE ASPHALT THICKNESS & RAIL HEIGHT

30'-10" CLEAR ROADWAY	ASPHALT OVERLAY THICKNESS @ MID-SPAN NORMAL CROWN SECTION	RAIL HEIGHT @ MID-SPAN
40' & 45' UNITS	2⅛"	3'-8⅞"
50' UNITS	1"	3'-7¾"

CORED SLABS REQUIRED

	NUMBER	LENGTH	TOTAL LENGTH
40' UNIT			
EXTERIOR C.S.	2	40'-0"	80'-0"
INTERIOR C.S.	9	40'-0"	360'-0"
TOTAL	11	40'-0"	440'-0"

BILL OF MATERIAL FOR ONE 50' CORED SLAB UNIT

BAR	NUMBER	SIZE	TYPE	EXTERIOR UNIT LENGTH	EXTERIOR UNIT WEIGHT	INTERIOR UNIT LENGTH	INTERIOR UNIT WEIGHT
B6	4	#4	STR	25'-9"	69	25'-9"	69
S1	8	#5	3	4'-3"	35	4'-3"	35
S2	104	#4	3	5'-4"	371	5'-4"	371
✻S3	59	#5	1	6'-2"	379		
REINFORCING STEEL			LBS.		475		475
✻EPOXY COATED REINFORCING STEEL			LBS.		379		
6500 P.S.I. CONCRETE			CU. YDS.		7.1		7.1
0.6" Ø L.R. STRANDS			No.		19		19

CORED SLABS REQUIRED

	NUMBER	LENGTH	TOTAL LENGTH
45' UNIT			
EXTERIOR C.S.	2	45'-0"	90'-0"
INTERIOR C.S.	9	45'-0"	405'-0"
TOTAL	11	45'-0"	495'-0"

CORED SLABS REQUIRED

	NUMBER	LENGTH	TOTAL LENGTH
50' UNIT			
EXTERIOR C.S.	2	50'-0"	100'-0"
INTERIOR C.S.	9	50'-0"	450'-0"
TOTAL	11	50'-0"	550'-0"

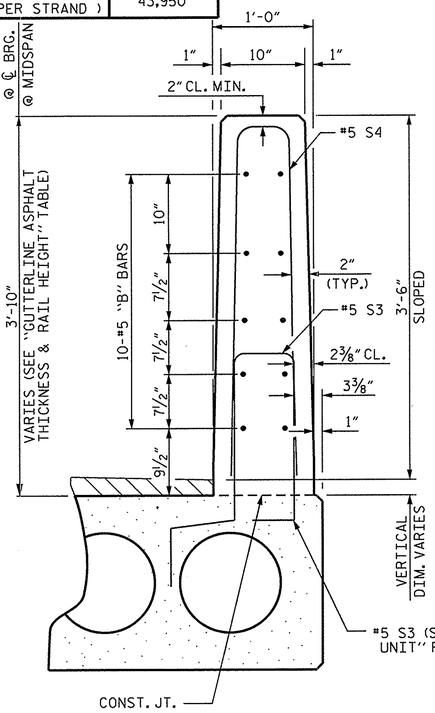

VERTICAL CONCRETE BARRIER RAIL SECTION

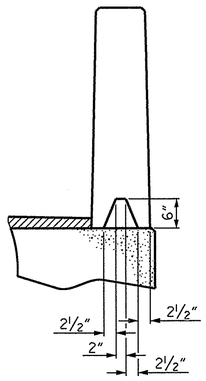

SECTION S-S
AT DAM IN OPEN JOINT
(THIS IS TO BE USED ONLY WHEN SLIP FORM IS USED)

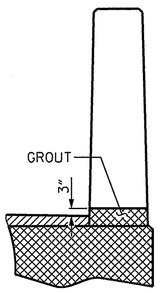

SECTION T-T
AT OPEN JOINT AT BENT
(THIS IS TO BE USED WHERE FOAM JOINT IS NOT USED)

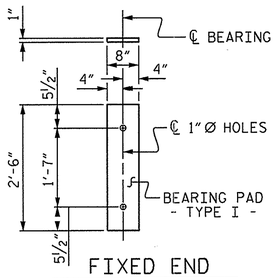

FIXED END
(TYPE I - 66 REQ'D)

ELASTOMERIC BEARING DETAILS

ELASTOMER IN ALL BEARINGS SHALL BE 50 DUROMETER HARDNESS.

℄ ½" EXP. JT. MAT'L HELD IN PLACE WITH GALVANIZED NAILS. (NOTE: OMIT EXP. JT. MAT'L. WHEN SLIP FORM IS USED)

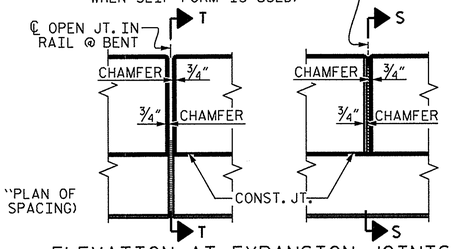

ELEVATION AT EXPANSION JOINTS

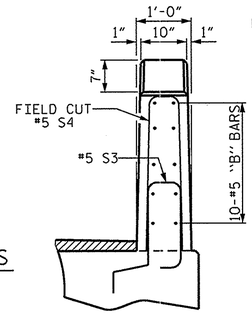

END VIEW

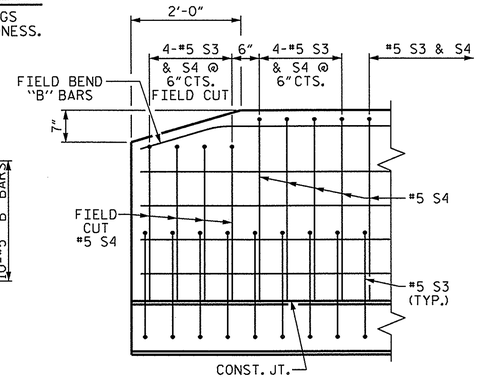

SIDE VIEW

END OF RAIL DETAILS

PROJECT NO. BD-5101P
MARTIN COUNTY
STATION: 12+98.94 -L-

SHEET 5 OF 5

STATE OF NORTH CAROLINA
DEPARTMENT OF TRANSPORTATION
RALEIGH

STANDARD
3'-0" X 1'-9"
PRESTRESSED CONCRETE
CORED SLAB UNIT
90° SKEW

NORTH CAROLINA PROFESSIONAL SEAL 14045 ENGINEER TIMOTHY L. COGGINS
09/30/13

REVISIONS						SHEET NO.
NO.	BY:	DATE:	NO.	BY:	DATE:	S-10
1			3			TOTAL SHEETS
2			4			

STD. NO. 21" PCS3_33_90S

ASSEMBLED BY : REZA KOUCHEKI DATE : 9/3/13
CHECKED BY : T.L. COGGINS DATE : 9/25/13
DRAWN BY : DGE 5/09
CHECKED BY : BCH 6/09
REV. 12/11 MAA/AAC

27-SEP-2013 10:58
S:\DPG\Tim\Division 1 LIBR\BD-5101P\gkoucheki\B5101P_SD_CS.dgn
tcoggins

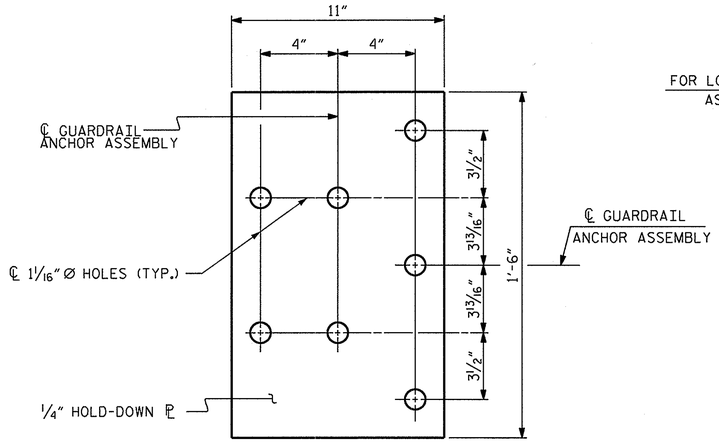

PLAN

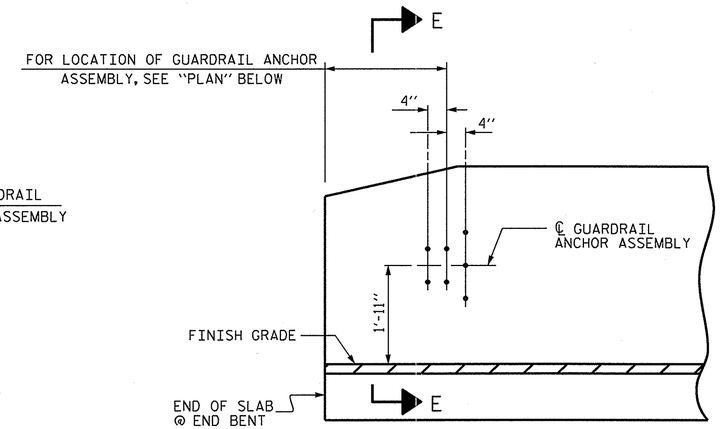

ELEVATION

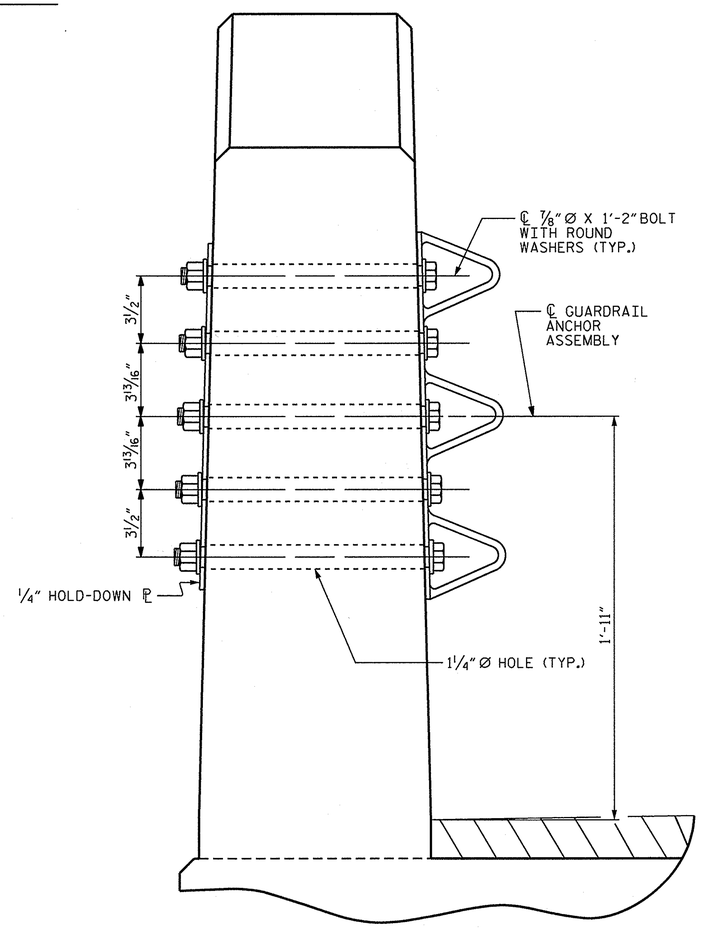

SECTION E-E

GUARDRAIL ANCHOR ASSEMBLY DETAILS

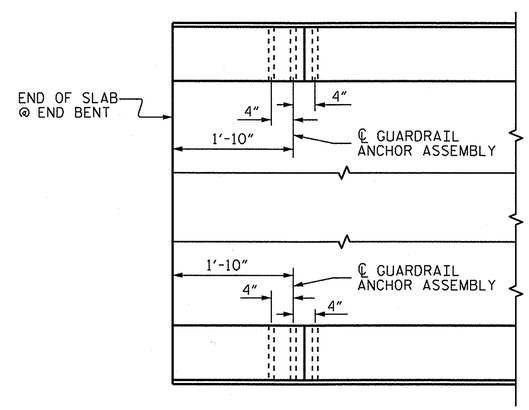

PLAN

LOCATION OF ANCHORS FOR GUARDRAIL

END BENT #1 SHOWN, END BENT #2 SIMILAR.

NOTES

THE GUARDRAIL ANCHOR ASSEMBLY SHALL CONSIST OF A 1/4" HOLD DOWN PLATE AND 7 - 7/8" Ø BOLTS WITH NUTS AND WASHERS.

THE HOLD-DOWN PLATE SHALL CONFORM TO AASHTO M270 GRADE 36. AFTER FABRICATION, THE HOLD-DOWN PLATE SHALL BE HOT-DIP GALVANIZED IN ACCORDANCE WITH AASHTO M111.

BOLTS SHALL CONFORM TO THE REQUIREMENTS OF ASTM A307 AND NUTS SHALL CONFORM TO THE REQUIREMENTS OF AASHTO M291. BOLTS, NUTS AND WASHERS SHALL BE GALVANIZED. (AT THE CONTRACTOR'S OPTION, STAINLESS STEEL BOLTS, NUTS AND WASHERS MAY BE USED AS AN ALTERNATE FOR THE 7/8" Ø GALVANIZED BOLTS, NUTS AND WASHERS. THEY SHALL CONFORM TO OR EXCEED THE MECHANICAL REQUIREMENTS OF ASTM A307. THE USE OF THIS ALTERNATE SHALL BE APPROVED BY THE ENGINEER.)

THE GUARDRAIL ANCHOR ASSEMBLY IS REQUIRED AT ALL POINTS WHERE APPROACH GUARDRAIL IS TO BE ATTACHED TO THE END OF BARRIER RAIL. FOR POINTS OF ATTACHMENT, SEE SKETCH.

AFTER INSTALLATION, THE EXPOSED THREAD OF THE BOLT SHALL BE BURRED WITH A SHARP POINTED TOOL.

THE COST OF THE GUARDRAIL ANCHOR ASSEMBLY SHALL BE INCLUDED IN THE UNIT CONTRACT PRICE BID FOR VERTICAL CONCRETE BARRIER RAIL.

THE VERTICAL REINFORCING BARS MAY BE SHIFTED SLIGHTLY IN THE VERTICAL CONCRETE BARRIER RAIL TO CLEAR ASSEMBLY BOLTS.

THE 1 1/4" Ø HOLES SHALL BE FORMED OR DRILLED WITH A CORE BIT. IMPACT TOOLS WILL NOT BE PERMITTED. ANY CONCRETE DAMAGED BY THIS WORK SHALL BE REPAIRED TO THE SATISFACTION OF THE ENGINEER.

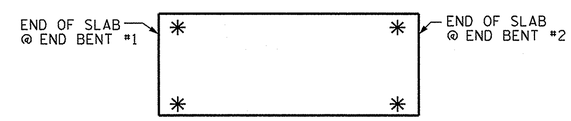

SKETCH SHOWING POINTS OF ATTACHMENT

✳ DENOTES GUARDRAIL ANCHOR ASSEMBLY

PROJECT NO. B-5101P

MARTIN COUNTY

STATION: 12+98.94 -L-

STATE OF NORTH CAROLINA
DEPARTMENT OF TRANSPORTATION
RALEIGH

STANDARD
GUARDRAIL ANCHORAGE FOR VERTICAL CONCRETE BARRIER RAIL

NORTH CAROLINA PROFESSIONAL SEAL 14045 ENGINEER TIMOTHY L. COGGINS
09/30/13

REVISIONS						SHEET NO.
NO.	BY:	DATE:	NO.	BY:	DATE:	S-11
1			3			TOTAL SHEETS
2			4			

ASSEMBLED BY : REZA KOUCHEKI DATE : 9/03/13
CHECKED BY : T.L. COGGINS DATE : 9/25/13

DRAWN BY : MAA 5/10
CHECKED BY : GM 5/10

REV. 10/1/11 MAA/GM
REV. 12/5/11 MAA/GM
REV. 6/13 MAA/GM

27-SEP-2013 10:57
S:\DPGI\Tlm\Division 1 LIBR\BD-5101P\gkoucheki\B5101P_SD_CS.dgn
tcoggins

(SHT 1) STD. NO. GRA3

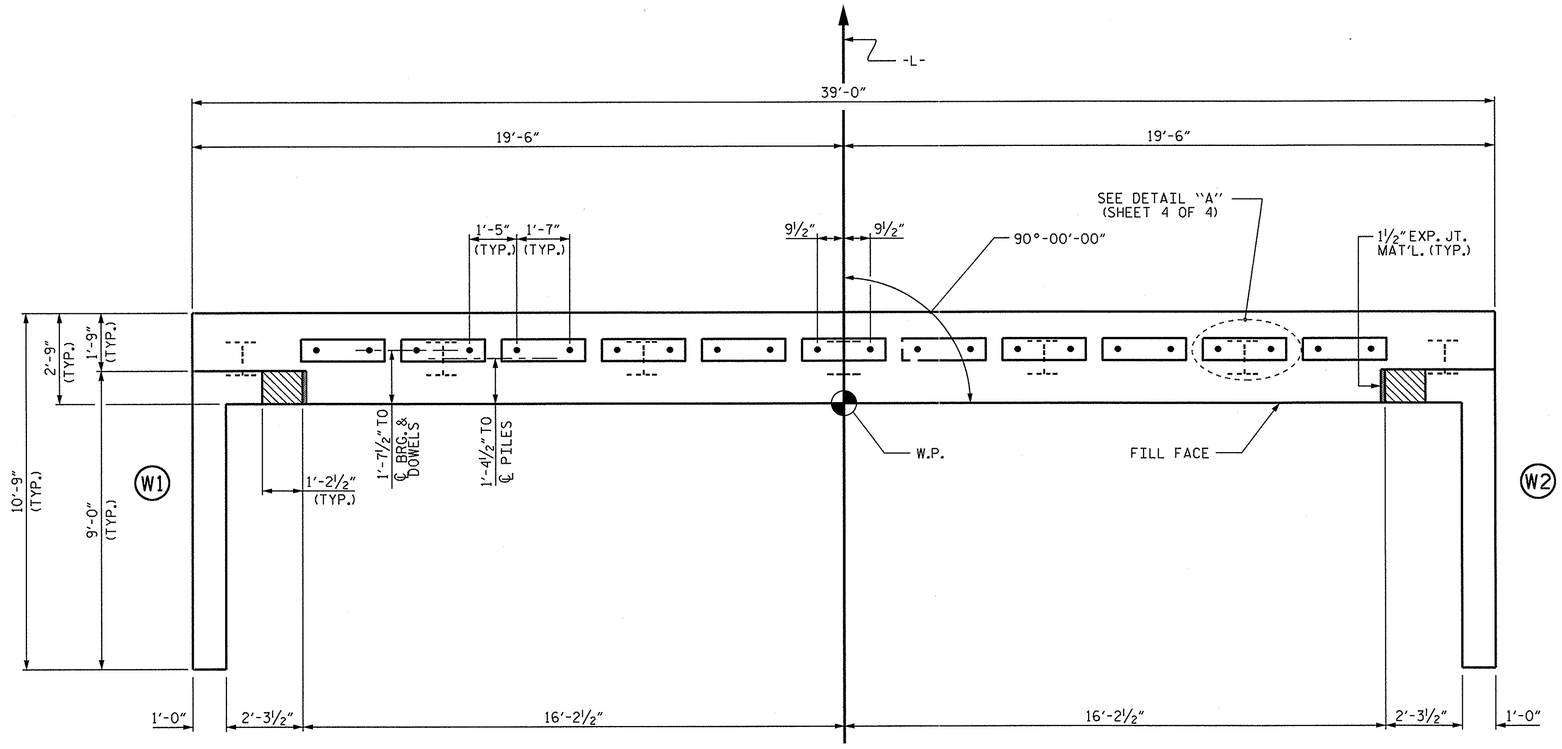

PLAN

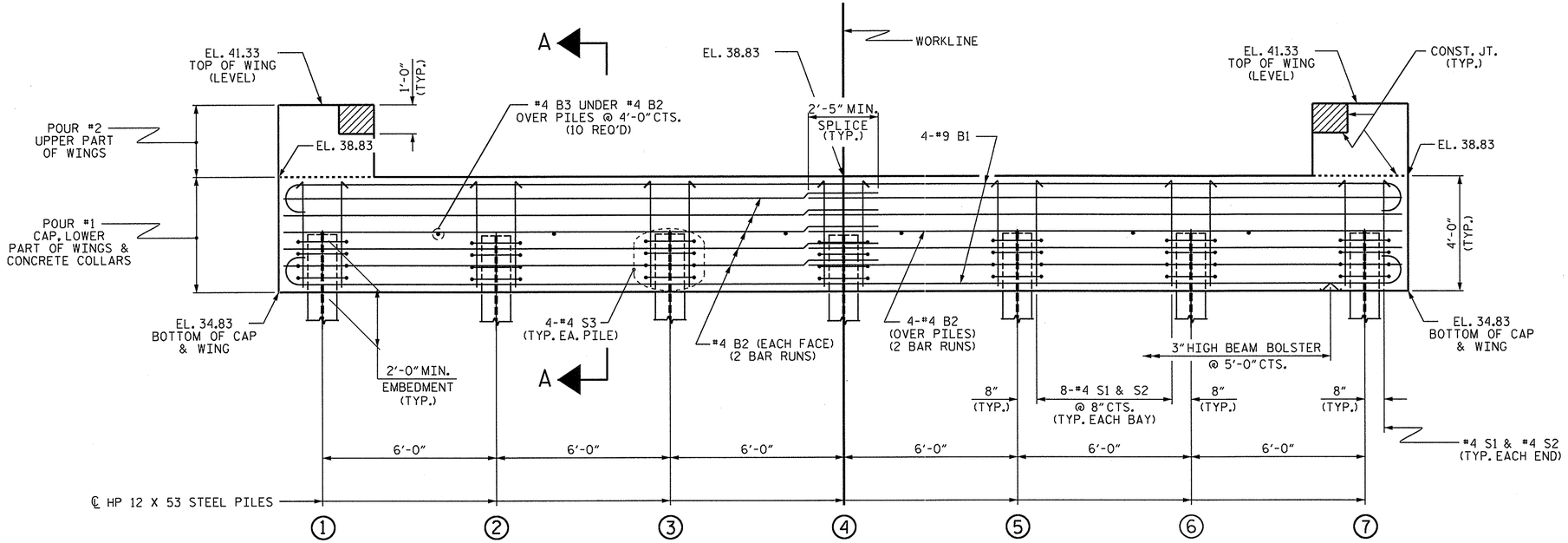

ELEVATION

WINGS NOT SHOWN FOR CLARITY.
FOR SECTION A-A, SEE SHEET 4 OF 4.
CONCRETE COLLARS FOR STEEL PILES NOT SHOWN IN PLAN AND ELEVATION VIEWS FOR CLARITY.
SEE "CORROSION PROTECTION FOR STEEL PILES DETAIL", SHEET 4 OF 4.

NOTES

STIRRUPS IN CAP MAY BE SHIFTED AS NECESSARY TO CLEAR DOWELS.

THE CONCRETE IN THE SHADED AREA OF THE WING SHALL BE POURED AFTER THE VERTICAL CONCRETE BARRIER RAIL IS CAST IF SLIP FORMING IS USED.

FOR PILE SPLICE DETAILS, SEE SHEET 4 OF 4.

FOR WING DETAILS, SEE SHEET 3 OF 4.

INSTALL THE 4" DIA. DRAIN PIPE THROUGH THE WINGWALL AS REQUIRED FOR REINFORCED BRIDGE APPROACH FILLS, SEE THE ROADWAY PLANS. REINFORCING STEEL IN THE WING WALL MAY BE SHIFTED AS NECESSARY TO CLEAR THE DRAIN PIPE.

FOR END BENT 1, ALL STEEL PILES SHALL BE GALVANIZED FROM THE TOP OF THE PILE TO A MINIMUM OF 20 FT BELOW THE BOTTOM OF THE END BENT CAP.

PROJECT NO. BD-5101P
MARTIN COUNTY
STATION: 12+98.94 -L-

SHEET 1 OF 4

STATE OF NORTH CAROLINA
DEPARTMENT OF TRANSPORTATION
RALEIGH

SUBSTRUCTURE

END BENT No. 1

NORTH CAROLINA PROFESSIONAL SEAL 14045 ENGINEER TIMOTHY L. COGGINS
09/30/13

REVISIONS						SHEET NO.
NO.	BY:	DATE:	NO.	BY:	DATE:	S-12
1			3			TOTAL SHEETS
2			4			

ASSEMBLED BY : REZA KOUCHEKI DATE : 9/03/13
CHECKED BY : T.L. COGGINS DATE : 9/25/13
DRAWN BY : WJH 12/11
CHECKED BY : AAC 12/11

27-SEP-2013 10:56
S:\DPGI\Tim\Division 1 LIBR\BD-5101P\gkoucheki\B5101P_SD_CS.dgn
tcoggins

STD. NO. EB_33_90S4

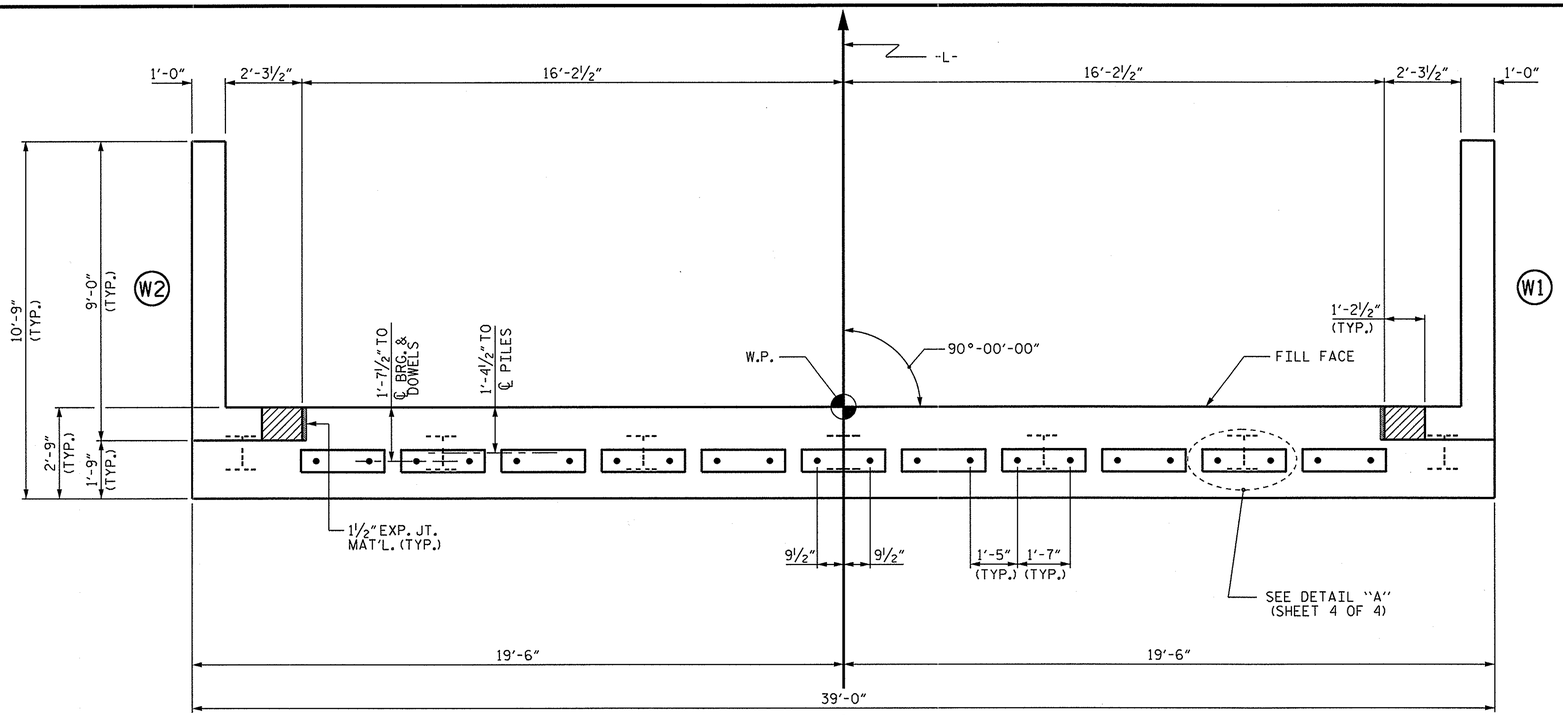

PLAN

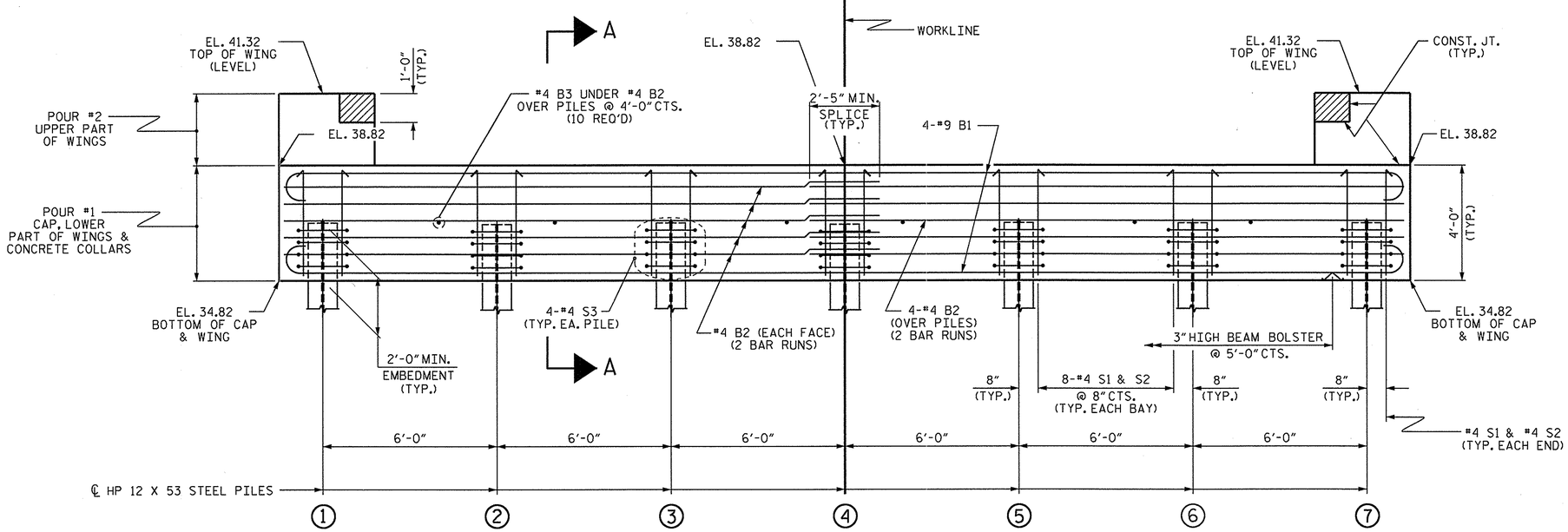

ELEVATION

WINGS NOT SHOWN FOR CLARITY.
FOR SECTION A-A, SEE SHEET 4 OF 4.
CONCRETE COLLARS FOR STEEL PILES NOT SHOWN IN PLAN AND ELEVATION VIEWS FOR CLARITY.
SEE "CORROSION PROTECTION FOR STEEL PILES DETAIL", SHEET 4 OF 4.

NOTES

STIRRUPS IN CAP MAY BE SHIFTED AS NECESSARY TO CLEAR DOWELS.

THE CONCRETE IN THE SHADED AREA OF THE WING SHALL BE POURED AFTER THE VERTICAL CONCRETE BARRIER RAIL IS CAST IF SLIP FORMING IS USED.

FOR PILE SPLICE DETAILS, SEE SHEET 4 OF 4.

FOR WING DETAILS, SEE SHEET 3 OF 4.

INSTALL THE 4" DIA. DRAIN PIPE THROUGH THE WINGWALL AS REQUIRED FOR REINFORCED BRIDGE APPROACH FILLS, SEE THE ROADWAY PLANS. REINFORCING STEEL IN THE WING WALL MAY BE SHIFTED AS NECESSARY TO CLEAR THE DRAIN PIPE.

FOR END BENT 2, ALL STEEL PILES SHALL BE GALVANIZED FROM THE TOP OF THE PILE TO A MINIMUM OF 20 FT BELOW THE BOTTOM OF THE END BENT CAP.

PROJECT NO. BD-5101P
MARTIN COUNTY
STATION: 12+98.94 -L-

SHEET 2 OF 4

STATE OF NORTH CAROLINA
DEPARTMENT OF TRANSPORTATION
RALEIGH

SUBSTRUCTURE

END BENT No. 2

NORTH CAROLINA PROFESSIONAL SEAL 14045 ENGINEER TIMOTHY L. COGGINS
09/30/13

REVISIONS								SHEET NO. S-13
NO.	BY:	DATE:	NO.	BY:	DATE:			TOTAL SHEETS
1			3					
2			4					

ASSEMBLED BY : REZA KOUCHEKI DATE : 9/03/13
CHECKED BY : T.L. COGGINS DATE : 9/25/13
DRAWN BY : WJH 12/11
CHECKED BY : AAC 12/11

27-SEP-2013 10:55
S:\DPG\Tim\Division 1 LIBR\BD-5101P\gkoucheki\B5101P_SD_CS.dgn
tcoggins

STD. NO. EB_33_90S4

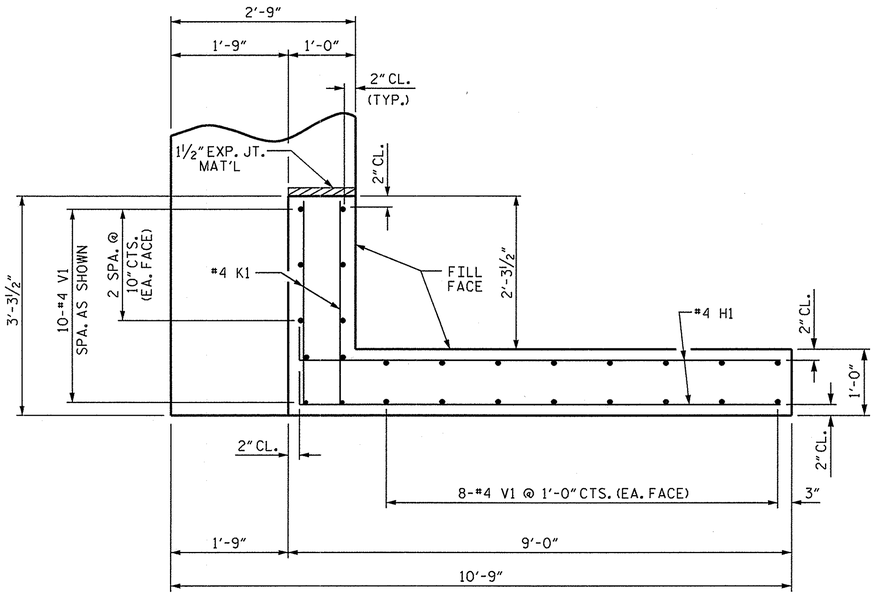

PLAN OF WING (W1)

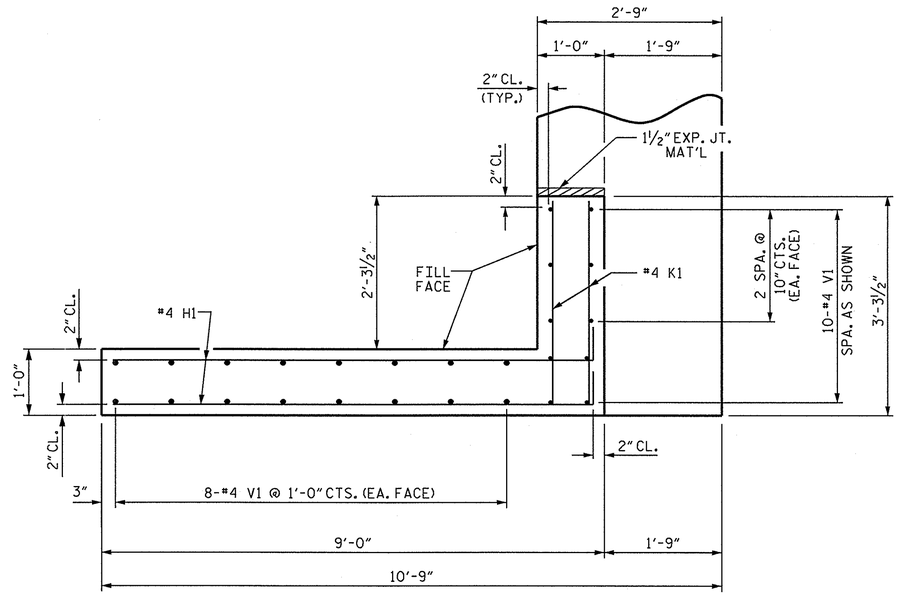

PLAN OF WING (W2)

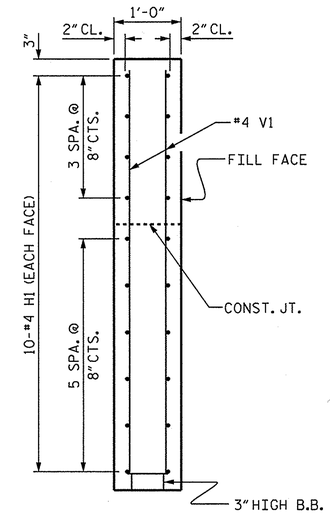

SECTION X-X

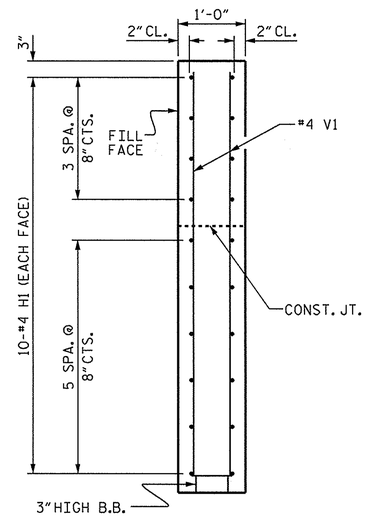

SECTION Y-Y

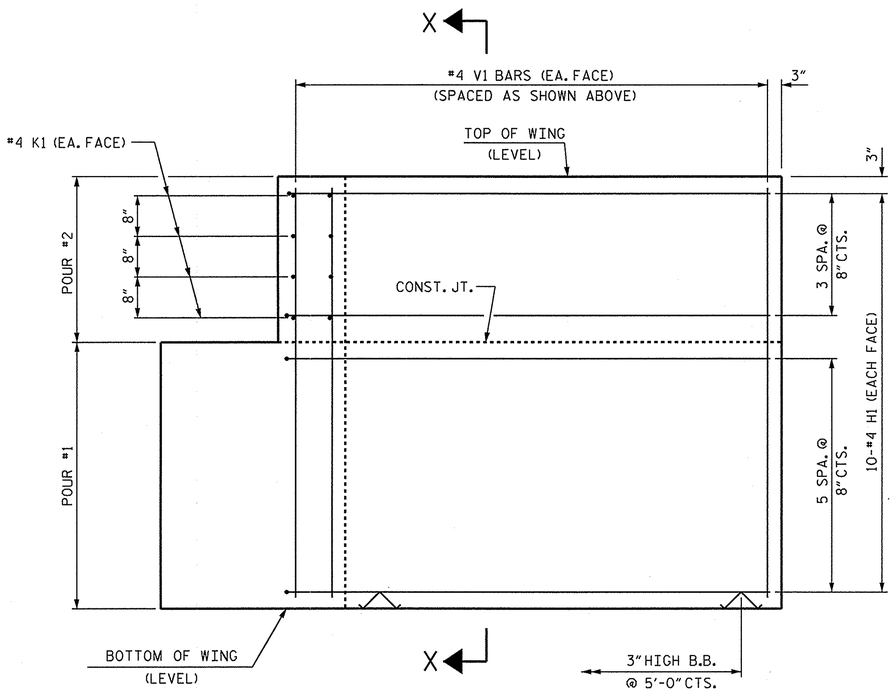

ELEVATION OF WING (W1)

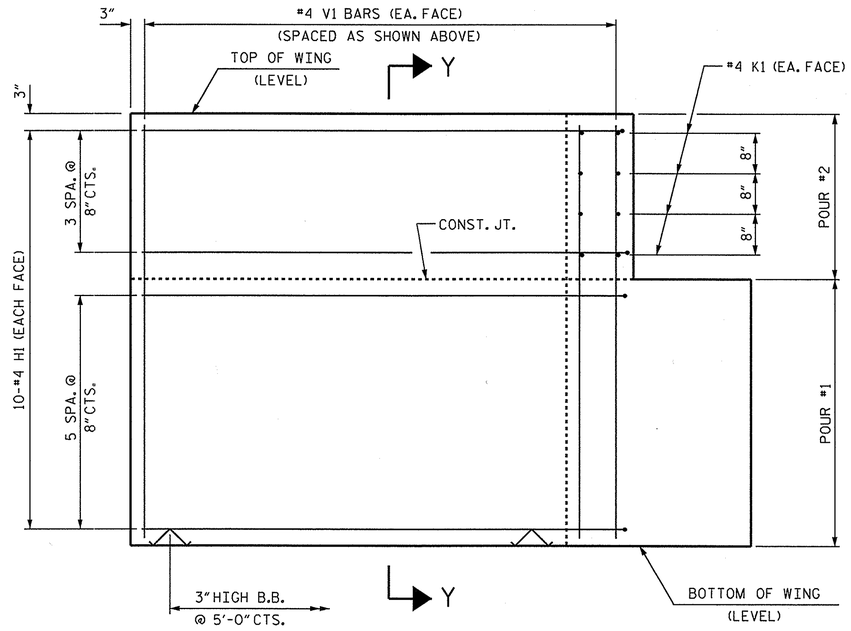

ELEVATION OF WING (W2)

WING DETAILS

NORTH CAROLINA PROFESSIONAL SEAL 14045 ENGINEER TIMOTHY L. COGGINS
09/30/13

PROJECT NO. BD-5101P
MARTIN COUNTY
STATION: 12+98.94 -L-

SHEET 3 OF 4

STATE OF NORTH CAROLINA
DEPARTMENT OF TRANSPORTATION
RALEIGH

SUBSTRUCTURE
END BENT
WING DETAILS

REVISIONS						SHEET NO.
NO.	BY:	DATE:	NO.	BY:	DATE:	S-14
1			3			TOTAL SHEETS
2			4			

ASSEMBLED BY : REZA KOUCHEKI DATE : 9/03/13
CHECKED BY : T.L. COGGINS DATE : 9/25/13
DRAWN BY : WJH 12/11
CHECKED BY : AAC 12/11

27-SEP-2013 10:55
S:\DPG1\Tim\Division 1 LIBR\BD-5101P\gkoucheki\B5101P_SD_CS.dgn
tcoggins

STD. NO. EB_33_90S4

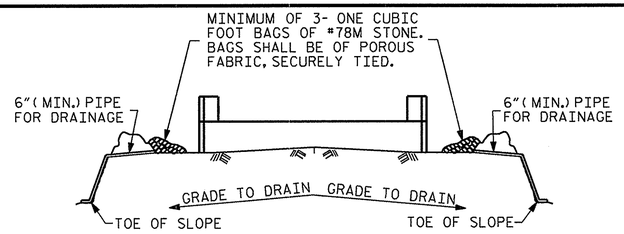

BAGGED STONE AND PIPE SHALL BE PLACED IMMEDIATELY AFTER COMPLETION OF END BENT EXCAVATION. PIPE MAY BE EITHER CONCRETE, CORRUGATED STEEL, CORRUGATED ALUMINUM ALLOY, OR CORRUGATED PLASTIC. PERFORATED PIPE WILL NOT BE ALLOWED.

BAGGED STONE SHALL REMAIN IN PLACE UNTIL THE ENGINEER DIRECTS THAT IT BE REMOVED. THE CONTRACTOR SHALL REMOVE AND DISPOSE OF SILT ACCUMULATIONS AT BAGGED STONE WHEN SO DIRECTED BY THE ENGINEER. BAGS SHALL BE REMOVED AND REPLACED WHENEVER THE ENGINEER DETERMINES THAT THEY HAVE DETERIORATED AND LOST THEIR EFFECTIVENESS.

NO SEPARATE PAYMENT WILL BE MADE FOR THIS WORK AND THE ENTIRE COST OF THIS WORK SHALL BE INCLUDED IN THE UNIT CONTRACT PRICE BID FOR THE SEVERAL PAY ITEMS.

TEMPORARY DRAINAGE AT END BENT

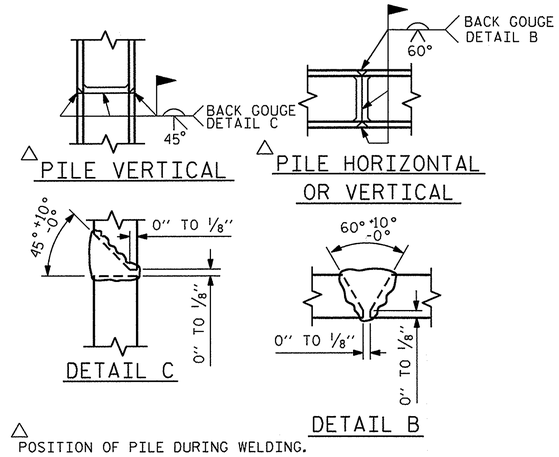

△ POSITION OF PILE DURING WELDING.

PILE SPLICE DETAILS

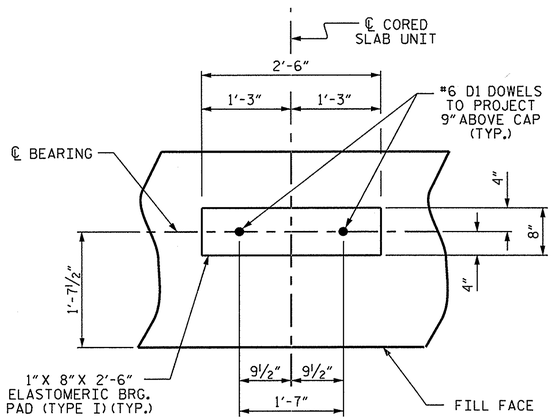

DETAIL "A"

(END BENT No. 1 SHOWN, END BENT No. 2 SIMILAR BY ROTATION)

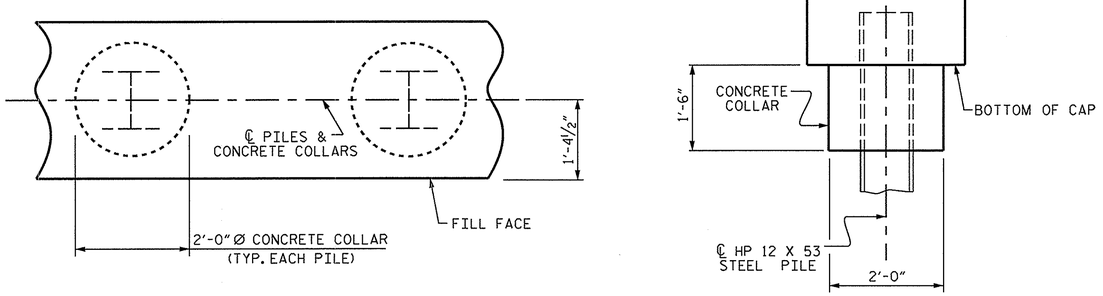

PLAN

ELEVATION

CORROSION PROTECTION FOR STEEL PILES DETAIL

(END BENT No. 1 SHOWN, END BENT No. 2 SIMILAR BY ROTATION)

BAR TYPES

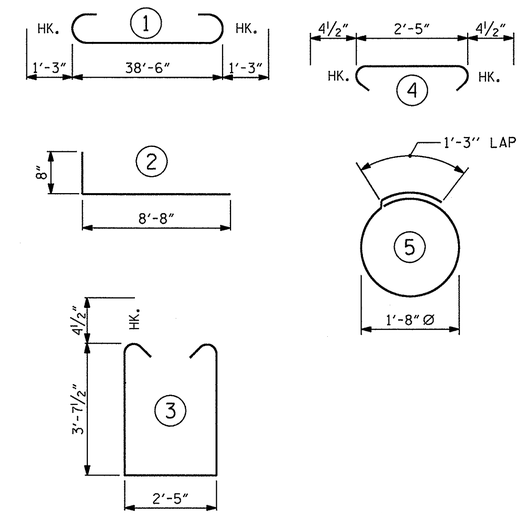

ALL BAR DIMENSIONS ARE OUT TO OUT.

END BENT No. 1	END BENT No. 2
HP 12 X 53 STEEL PILES	HP 12 X 53 STEEL PILES
NO: 7 LIN. FT.= 490	NO: 7 LIN. FT.= 490

BILL OF MATERIAL FOR ONE END BENT

BAR	NO.	SIZE	TYPE	LENGTH	WEIGHT
B1	8	#9	1	41'-0"	1115
B2	28	#4	STR	20'-7"	385
B3	10	#4	STR	2'-5"	16
D1	22	#6	STR	1'-6"	50
H1	40	#4	2	9'-4"	249
K1	16	#4	STR	2'-11"	31
S1	50	#4	3	10'-5"	348
S2	50	#4	4	3'-2"	106
S3	28	#4	5	6'-6"	122
V1	52	#4	STR	6'-2"	214

REINFORCING STEEL (FOR ONE END BENT) 2636 LBS.

CLASS A CONCRETE BREAKDOWN (FOR ONE END BENT)

POUR #1 CAP, LOWER PART OF WINGS & COLLARS 19.5 C.Y.

POUR #2 UPPER PART OF WINGS 2.1 C.Y.

TOTAL CLASS A CONCRETE 21.6 C.Y.

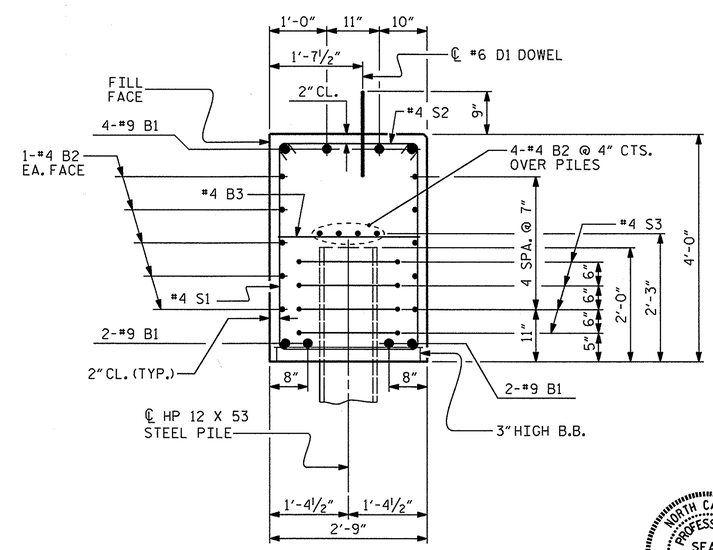

SECTION A-A

(CONCRETE COLLAR NOT SHOWN FOR CLARITY. SEE "CORROSION PROTECTION FOR STEEL PILES DETAIL.")

NORTH CAROLINA PROFESSIONAL SEAL 14045 ENGINEER TIMOTHY L. COGGINS

04/30/13

PROJECT NO. BD-5101P

MARTIN COUNTY

STATION: 12+98.94 -L-

SHEET 4 OF 4

STATE OF NORTH CAROLINA
DEPARTMENT OF TRANSPORTATION
RALEIGH

SUBSTRUCTURE

END BENT No. 1 & 2 DETAILS

REVISIONS						SHEET NO.
NO.	BY:	DATE:	NO.	BY:	DATE:	S-15
1			3			TOTAL SHEETS
2			4			

ASSEMBLED BY : REZA KOUCHEKI DATE : 9/03/13
CHECKED BY : T.L. COGGINS DATE : 9/25/13

DRAWN BY : WJH 12/11
CHECKED BY : AAC 12/11

27-SEP-2013 10:54
S:\DPG1\Tim\Division 1 LIBR\BD-5101P\gkoucheki\B5101P_SD_CS.dgn
tcoggins

STD. NO. EB_33_90S4

NOTES

STIRRUPS IN CAP MAY BE SHIFTED AS NECESSARY TO CLEAR DOWELS.

THE LATERAL GUIDES ARE NOT TO BE POURED UNTIL AFTER THE CORED SLAB UNITS ARE IN PLACE.

★ INVERT ALTERNATE STIRRUPS.

FOR ADDITIONAL REINFORCING STEEL IN PP 18 × 0.50 GALVANIZED STEEL PILES. SEE SHEET 5 OF 5.

34.0 FT GALVANIZE THE TOP OF EACH INTERIOR BENT PILE A MINIMUM OF ~~27.0 FEET~~. GALVANIZE IN ACCORDANCE WITH SECTION 1076 OF THE STANDARD SPECIFICATIONS.

THE CONTRACTOR HAS THE OPTION TO OMIT THE LATERAL GUIDE IF APPROVED BY THE ENGINEER.

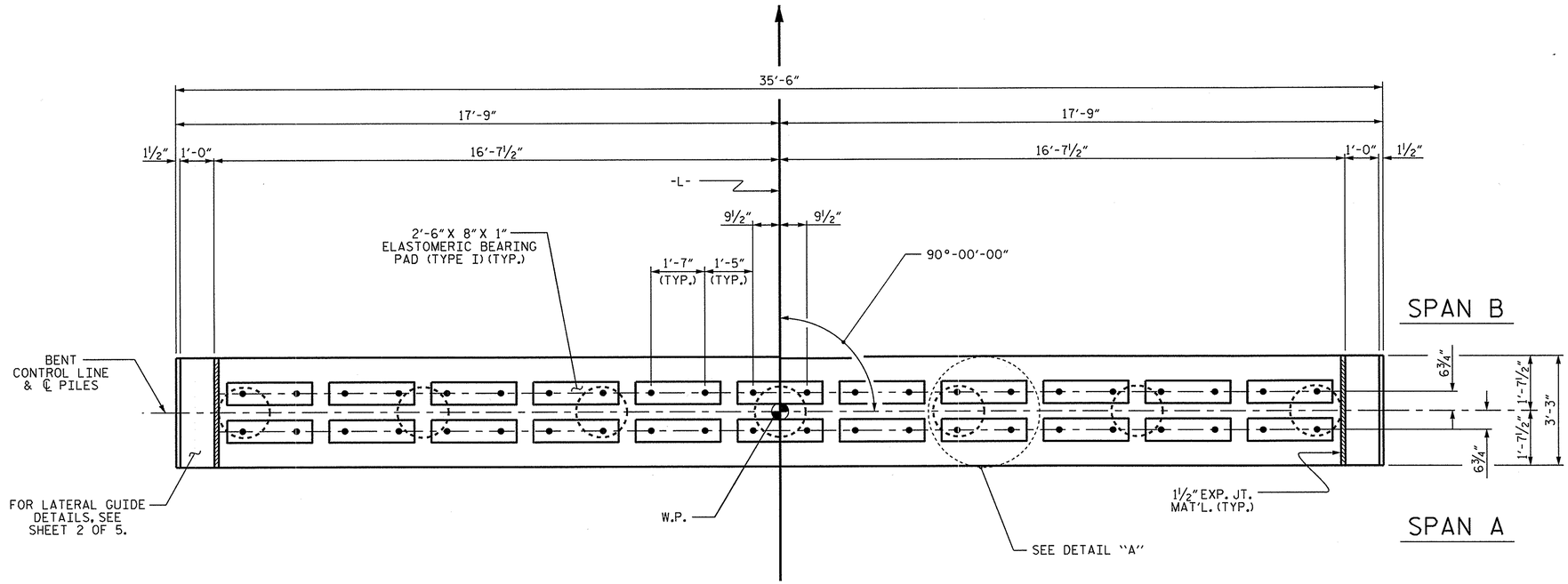

PLAN

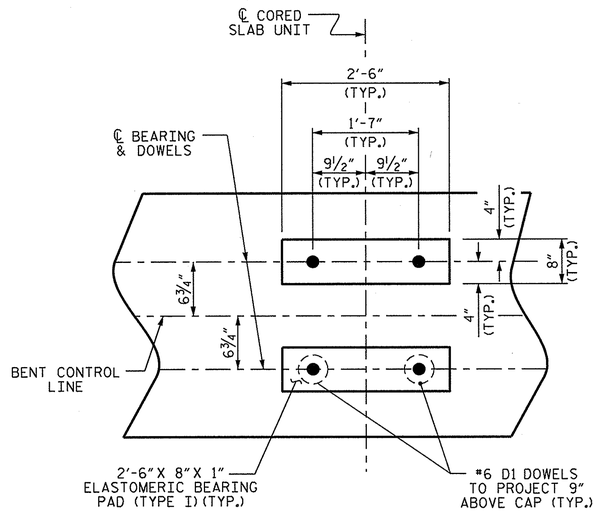

DETAIL "A"

(DIMENSIONS ARE TYPICAL EACH BEARING)

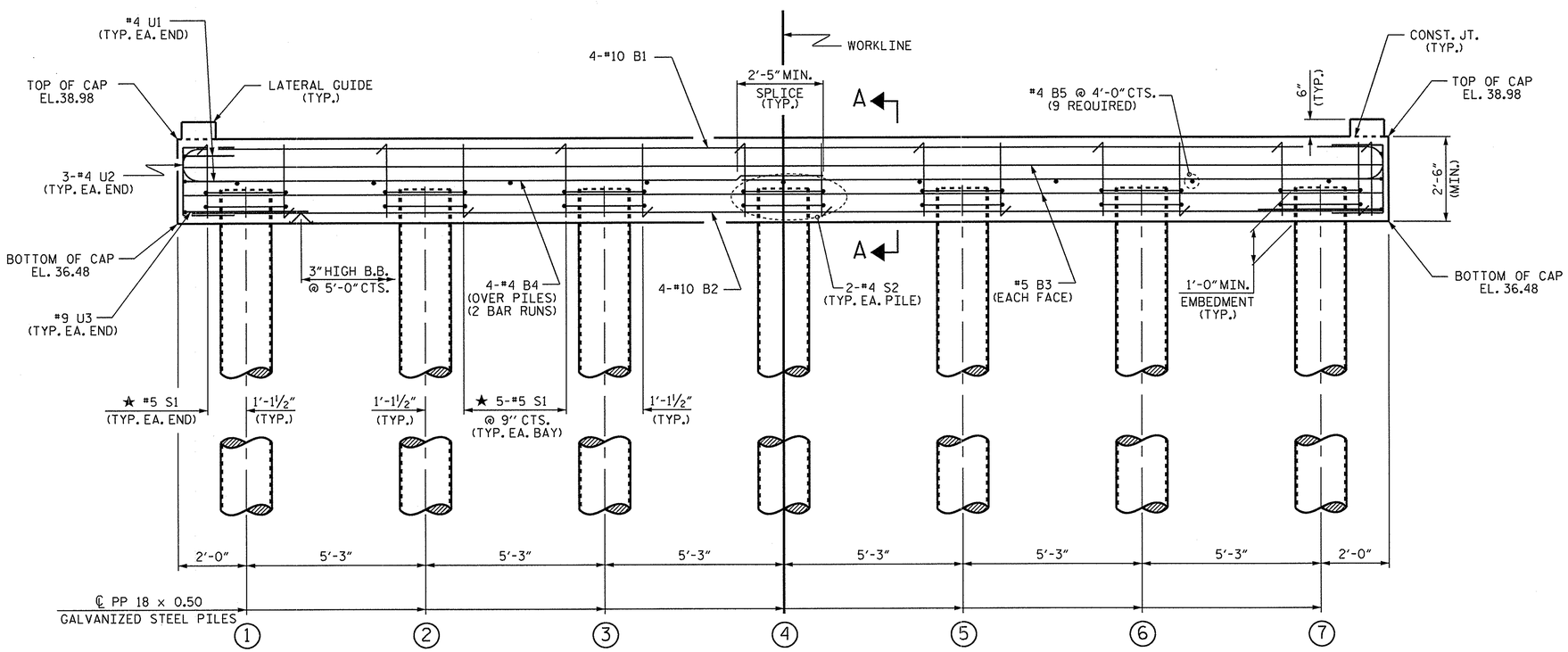

ELEVATION

FOR SECTION A-A, SEE SHEET 2 OF 5

PROJECT NO. BD-5101P

MARTIN COUNTY

STATION: 12+98.94 -L-

SHEET 1 OF 5

STATE OF NORTH CAROLINA
DEPARTMENT OF TRANSPORTATION
RALEIGH

SUBSTRUCTURE

BENT No. 1

NORTH CAROLINA PROFESSIONAL SEAL 14045 ENGINEER TIMOTHY L. COGGINS
09/30/13

ASSEMBLED BY : REZA KOUCHEKI	DATE : 9/19/13
CHECKED BY : T.L. COGGINS	DATE : 9/25/13
DRAWN BY : DGE 06/10	
CHECKED BY : MKT 06/10	

REVISIONS						SHEET NO.
NO.	BY:	DATE:	NO.	BY:	DATE:	S-16
1			3			TOTAL SHEETS
2			4			

27-SEP-2013 10:54
S:\DPG1\Tim\Division 1 LIBR\BD-5101P\gkoucheki\B5101P_SD_CS.dgn
tcoggins

STD.NO. 18" PP_BT_33_90S_<60'

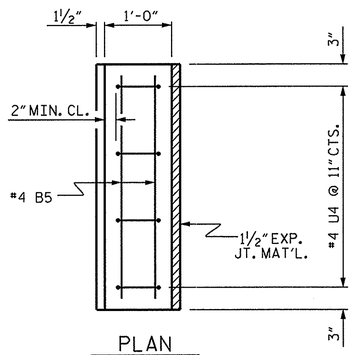

PLAN

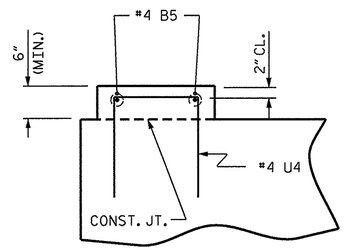

ELEVATION

LATERAL GUIDE DETAILS

(LEFT LATERAL GUIDE SHOWN, RIGHT SIDE SIMILAR)

BAR TYPES

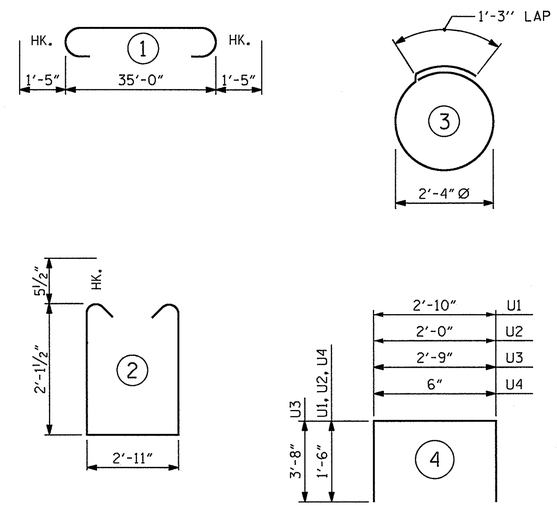

ALL BAR DIMENSIONS ARE OUT TO OUT.

BILL OF MATERIAL

BENT No. 1

BAR	NO.	SIZE	TYPE	LENGTH	WEIGHT
B1	4	#10	1	37'-10"	651
B2	4	#10	STR	35'-2"	605
B3	4	#5	STR	35'-2"	147
B4	8	#4	STR	18'-10"	101
B5	13	#4	STR	2'-11"	25
D1	44	#6	STR	1'-6"	99
S1	32	#5	2	8'-1"	270
S2	14	#4	3	8'-7"	80
U1	4	#4	4	5'-10"	16
U2	6	#4	4	5'-0"	20
U3	2	#9	4	10'-1"	69
U4	8	#4	4	3'-6"	19

REINFORCING STEEL 2102 LBS

CLASS A CONCRETE BREAKDOWN

POUR #1 (CAP)	▲ 10.2 C.Y.
POUR #2 (LATERAL GUIDES)	0.1 C.Y.
TOTAL CLASS A CONCRETE	10.3 C.Y.

PP 18 x 0.50 GALVANIZED STEEL PILES

No. 7 LIN. FT. 805

▲ CONCRETE DISPLACED BY THE PP 18 x 0.50 GALVANIZED STEEL PILES HAS BEEN DEDUCTED FROM THE CONCRETE QUANTITY.

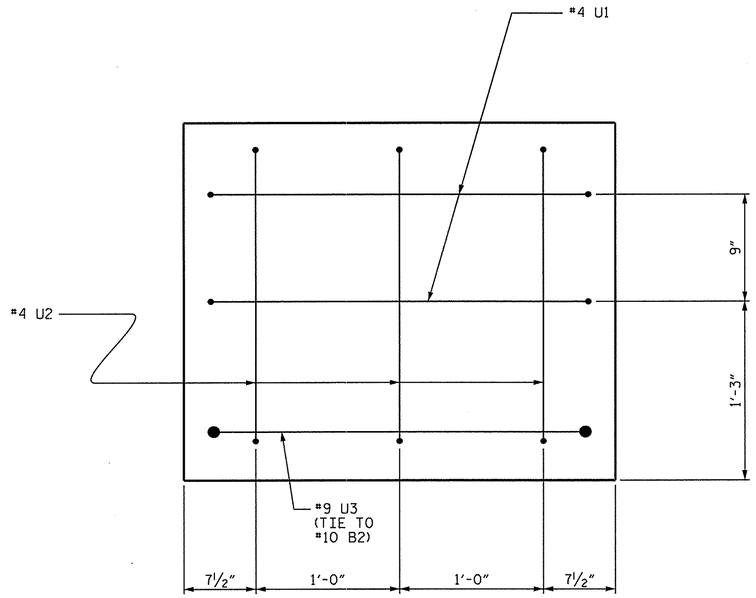

END OF CAP VIEW

(TYPICAL BOTH ENDS)

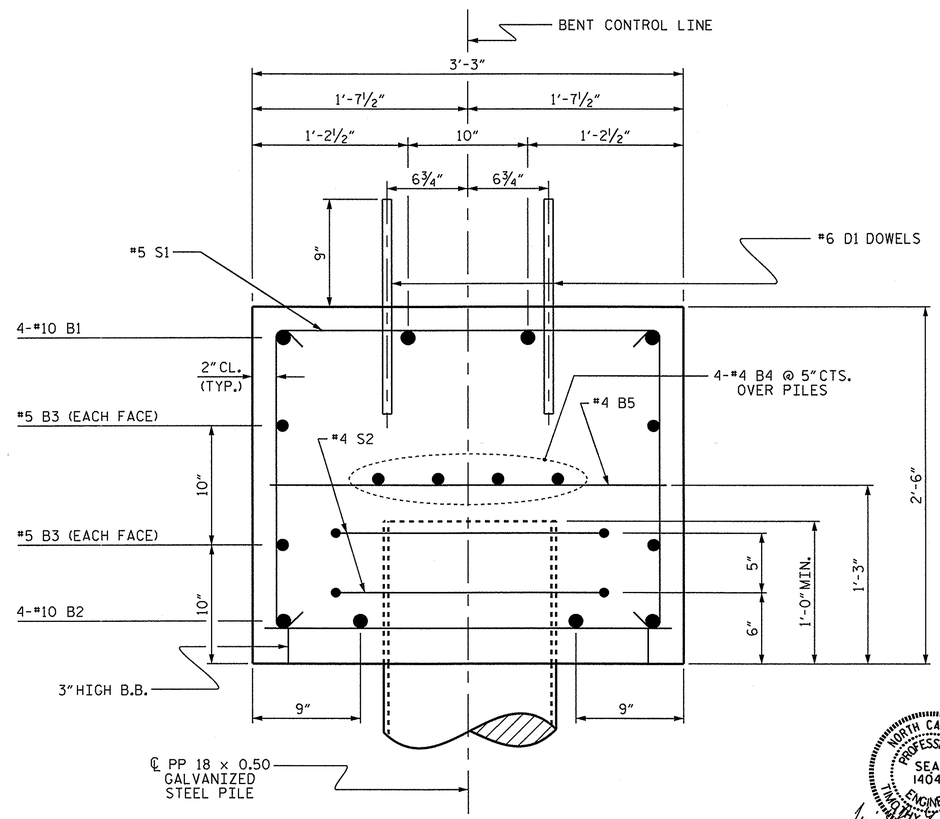

SECTION A-A

NORTH CAROLINA PROFESSIONAL SEAL 14045 ENGINEER TIMOTHY L. COGGINS
09/30/13

PROJECT NO. BD-5101P

MARTIN COUNTY

STATION: 12+98.94 -L-

SHEET 2 OF 5

STATE OF NORTH CAROLINA
DEPARTMENT OF TRANSPORTATION
RALEIGH

SUBSTRUCTURE

BENT No. 1

REVISIONS						SHEET NO.
NO.	BY:	DATE:	NO.	BY:	DATE:	S-17
1			3			TOTAL SHEETS
2			4			

DRAWN BY : REZA KOUCHEKI DATE : 9/23/13
CHECKED BY : T.L. COGGINS DATE : 9/26/13

DRAWN BY : DGE 06/10
CHECKED BY : MKT 06/10

27-SEP-2013 10:53
S:\DPG1\Tim\Division 1 LIBR\BD-5101P\gkoucheki\B5101P_SD_CS.dgn
tcoggins

STD.NO. 18" PP_BT_33_90S_<60'

NOTES

STIRRUPS IN CAP MAY BE SHIFTED AS NECESSARY TO CLEAR DOWELS.

THE LATERAL GUIDES ARE NOT TO BE POURED UNTIL AFTER THE CORED SLAB UNITS ARE IN PLACE.

★ INVERT ALTERNATE STIRRUPS.

FOR ADDITIONAL REINFORCING STEEL IN PP 18 x 0.50 GALVANIZED STEEL PILES, SEE SHEET 5 OF 5.

GALVANIZE THE TOP OF EACH INTERIOR BENT PILE A MINIMUM OF ~~30.0 FEET~~ 34.0 FT. GALVANIZE IN ACCORDANCE WITH SECTION 1076 OF THE STANDARD SPECIFICATIONS.

THE CONTRACTOR HAS THE OPTION TO OMIT THE LATERAL GUIDE IF APPROVED BY THE ENGINEER.

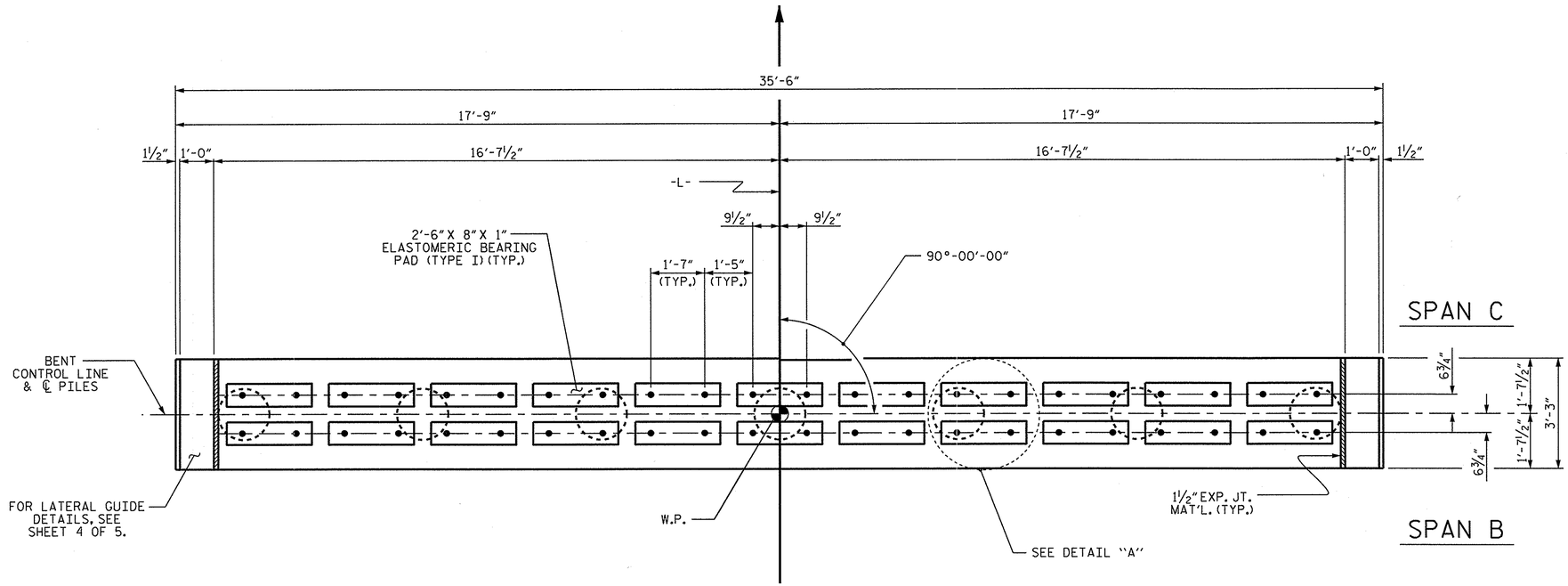

PLAN

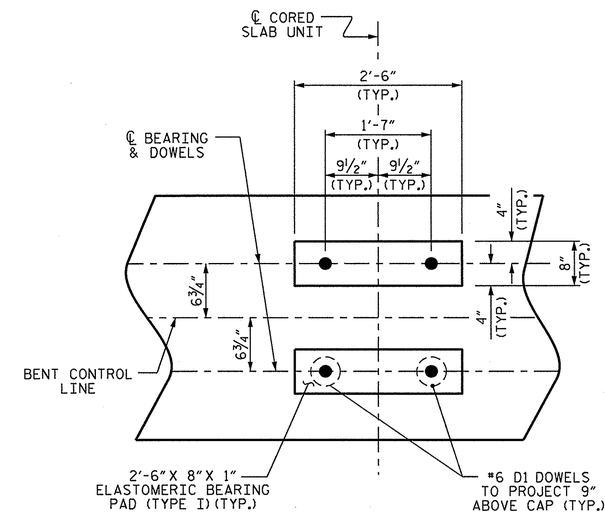

DETAIL "A"

(DIMENSIONS ARE TYPICAL EACH BEARING)

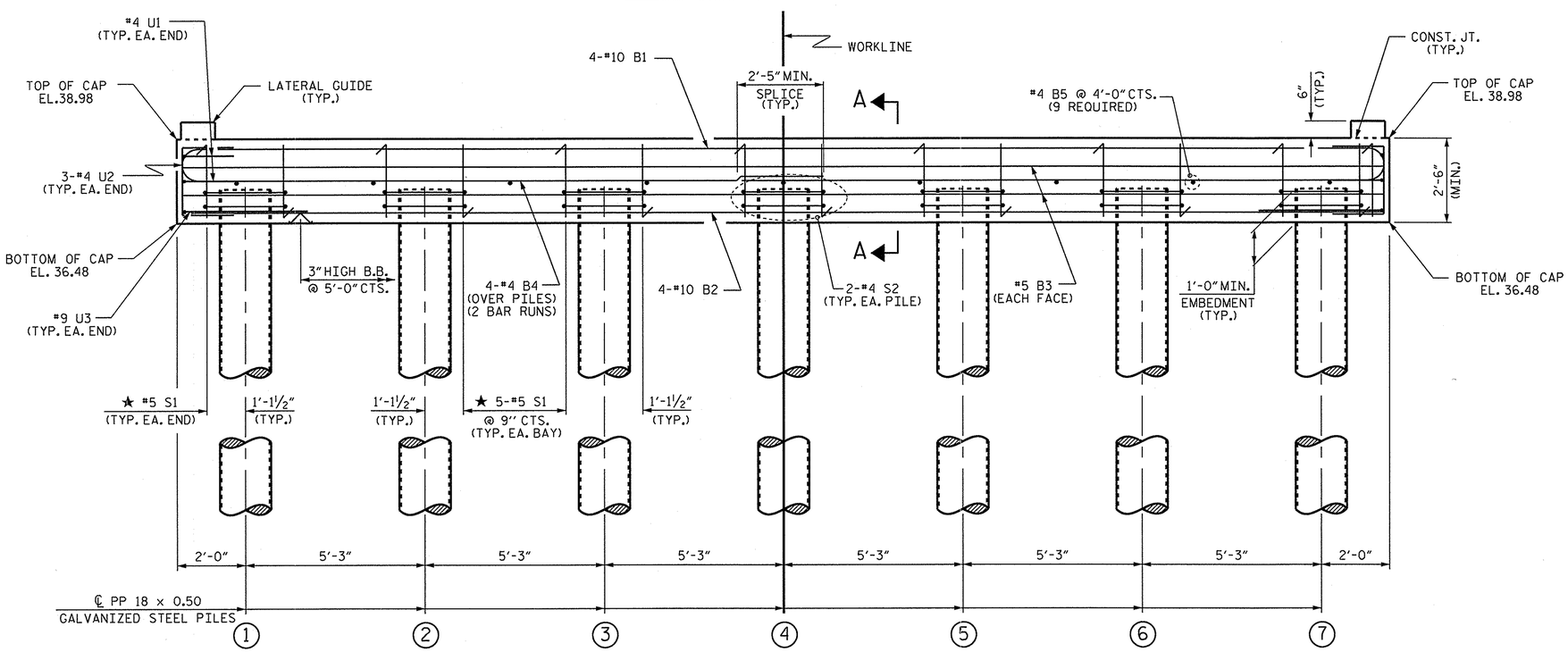

ELEVATION

FOR SECTION A-A, SEE SHEET 4 OF 5

PROJECT NO. BD-5101P

MARTIN COUNTY

STATION: 12+98.94 -L-

SHEET 3 OF 5

STATE OF NORTH CAROLINA
DEPARTMENT OF TRANSPORTATION
RALEIGH

SUBSTRUCTURE

BENT No. 2

NORTH CAROLINA PROFESSIONAL SEAL 14045 ENGINEER TIMOTHY L. COGGINS
09/30/13

REVISIONS						SHEET NO.
NO.	BY:	DATE:	NO.	BY:	DATE:	S-18
1			3			TOTAL SHEETS
2			4			

ASSEMBLED BY : REZA KOUCHEKI DATE : 9/23/13
CHECKED BY : T.L. COGGINS DATE : 9/26/13

DRAWN BY : DGE 06/10
CHECKED BY : MKT 06/10

27-SEP-2013 10:52
S:\DPG1\Tim\Division 1 LIBR\BD-5101P\gkoucheki\B5101P_SD_CS.dgn
tcoggins

STD.NO. 18"PP_BT_33_90S_<60'

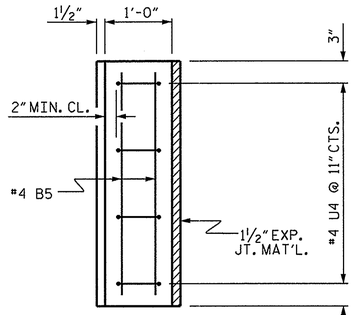

PLAN

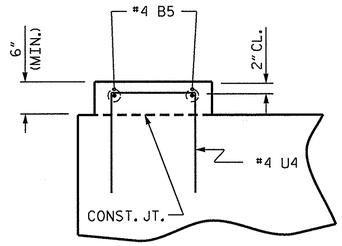

ELEVATION

LATERAL GUIDE DETAILS

(LEFT LATERAL GUIDE SHOWN, RIGHT SIDE SIMILAR)

BAR TYPES

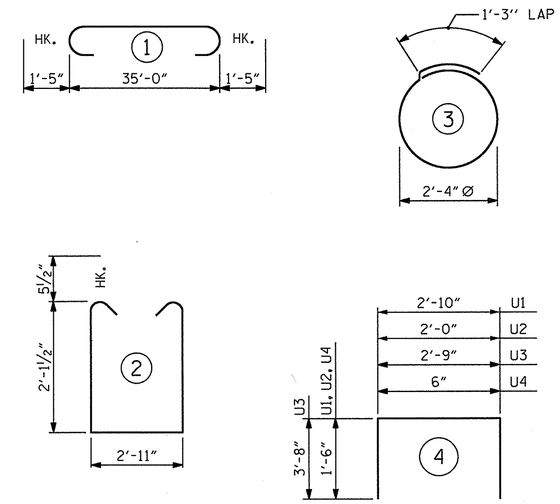

ALL BAR DIMENSIONS ARE OUT TO OUT.

BILL OF MATERIAL

BENT No. 2

BAR	NO.	SIZE	TYPE	LENGTH	WEIGHT
B1	4	#10	1	37'-10"	651
B2	4	#10	STR	35'-2"	605
B3	4	#5	STR	35'-2"	147
B4	8	#4	STR	18'-10"	101
B5	13	#4	STR	2'-11"	25
D1	44	#6	STR	1'-6"	99
S1	32	#5	2	8'-1"	270
S2	14	#4	3	8'-7"	80
U1	4	#4	4	5'-10"	16
U2	6	#4	4	5'-0"	20
U3	2	#9	4	10'-1"	69
U4	8	#4	4	3'-6"	19

REINFORCING STEEL 2102 LBS

CLASS A CONCRETE BREAKDOWN

POUR #1 (CAP)	▲ 10.2 C.Y.
POUR #2 (LATERAL GUIDES)	0.1 C.Y.
TOTAL CLASS A CONCRETE	10.3 C.Y.

PP 18 x 0.50 GALVANIZED STEEL PILES

No. 7 LIN. FT. 805

▲ CONCRETE DISPLACED BY THE PP 18 x 0.50 GALVANIZED STEEL PILES HAS BEEN DEDUCTED FROM THE CONCRETE QUANTITY.

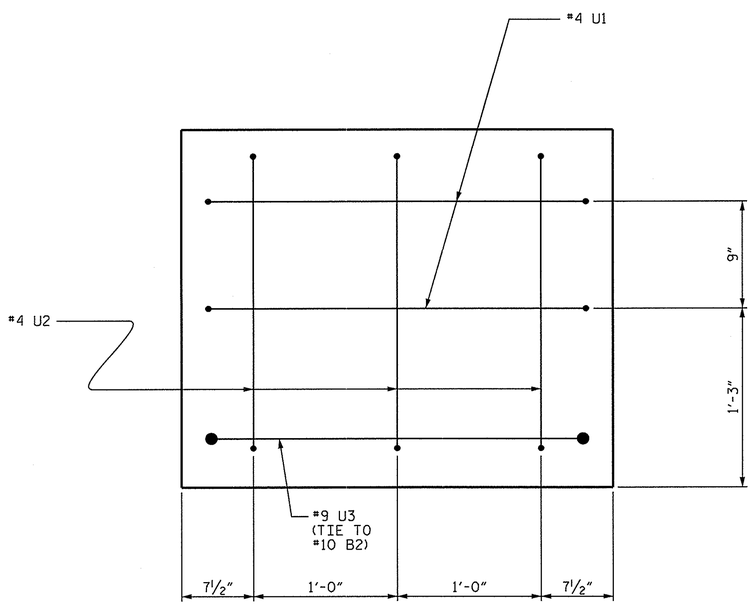

END OF CAP VIEW

(TYPICAL BOTH ENDS)

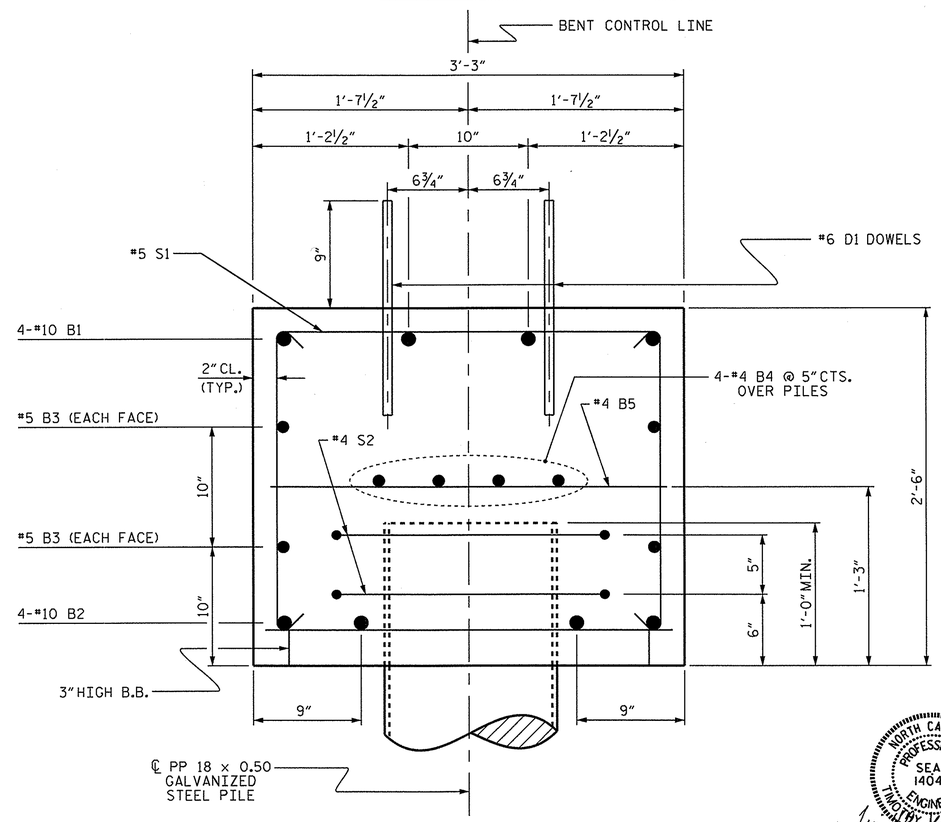

SECTION A-A

NORTH CAROLINA PROFESSIONAL SEAL 14045 ENGINEER TIMOTHY L. COGGINS
09/30/13

PROJECT NO. BD-5101P

MARTIN COUNTY

STATION: 12+98.94 -L-

SHEET 4 OF 5

STATE OF NORTH CAROLINA
DEPARTMENT OF TRANSPORTATION
RALEIGH

SUBSTRUCTURE

BENT No. 2

REVISIONS								SHEET NO.
NO.	BY:	DATE:	NO.	BY:	DATE:			S-19
1			3					TOTAL SHEETS
2			4					

DRAWN BY :	REZA KOUCHEKI	DATE :	9/23/13
CHECKED BY :	T.L. COGGINS	DATE :	9/26/13
DRAWN BY :	DGE 06/10		
CHECKED BY :	MKT 06/10		

27-SEP-2013 10:52
S:\DPG1\Tlm\Division 1 LIBR\BD-5101P\gkoucheki\B5101P_SD_CS.dgn
tcoggins

STD.NO. 18" PP_BT_33_90S_<60'

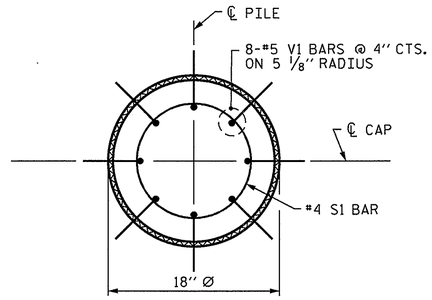

PLAN

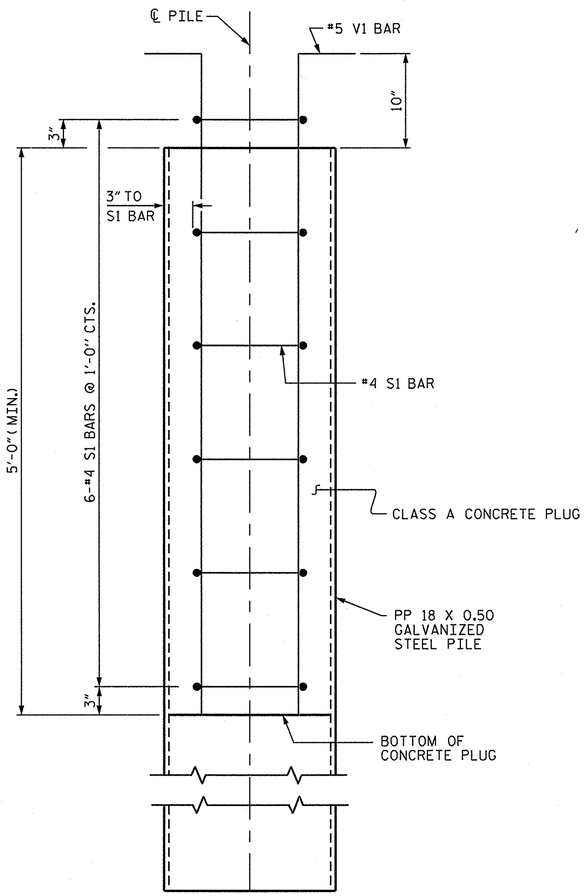

ELEVATION

PP 18 X 0.50 GALVANIZED STEEL PILE

(OPEN END)

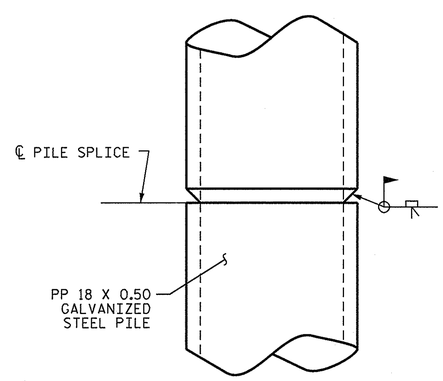

PIPE PILE SPLICE DETAIL

NOTES

PIPE PILES SHALL BE IN ACCORDANCE WITH SECTION 1084 OF THE STANDARD SPECIFICATIONS.

GALVANIZE STEEL PIPE PILES IN ACCORDANCE WITH SECTION 1076 OF THE STANDARD SPECIFICATIONS UNLESS METALLIZING IS REQUIRED. GALVANIZING OR METALLIZING PIPE PILE PLATES IS NOT REQUIRED.

PIPE PILE PLATES, IF REQUIRED, SHALL BE IN ACCORDANCE WITH SECTION 450 OF THE STANDARD SPECIFICATIONS.

REMOVE AND REPLACE OR REPAIR TO THE SATISFACTION OF THE ENGINEER PILES THAT ARE DAMAGED, DEFORMED OR COLLAPSED DURING INSTALLATION OR DRIVING.

PILE SPLICES SHALL BE IN ACCORDANCE WITH THE STANDARD SPECIFICATIONS AND AWS D1.1.

FOR OPEN END PIPE PILES, REMOVE ENOUGH SOIL AND WATER FROM INSIDE THE PILES TO CONSTRUCT THE CONCRETE PLUG WITHOUT FOULING THE CONCRETE.

FORM THE CONCRETE PLUG SUCH THAT THE REINFORCING STEEL OR CONCRETE DOES NOT MOVE AND THE CLEARANCE FROM THE REINFORCING STEEL TO THE INSIDE OF THE PILE IS MAINTAINED AFTER CONCRETE PLACEMENT. DO NOT PLACE CONCRETE IN THE BENT CAP UNTIL THE CONCRETE PLUG HAS ATTAINED A MINIMUM COMPRESSIVE STRENGTH OF 1500 PSI.

THE REINFORCING STEEL, CLASS A CONCRETE, AND GALVANIZING ARE CONSIDERED INCIDENTAL TO THE CONTRACT UNIT PRICE BID PER LINEAR FOOT FOR PP 18 X 0.50 GALVANIZED STEEL PILES.

BILL OF MATERIAL FOR ONE PP 18 X 0.50 GALVANIZED STEEL PILE

BAR	NO.	SIZE	TYPE	LENGTH	WEIGHT
S1	6	#4	1	4'-5''	18
V1	8	#5	2	6'-8''	56
REINFORCING STEEL =				74	lbs

CLASS A CONCRETE

5'-0'' MINIMUM PLUG 0.3 CY

BAR TYPES

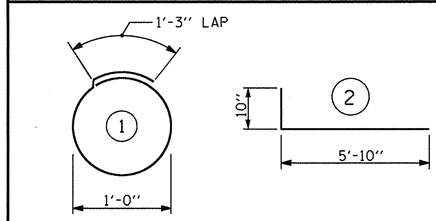

ALL BAR DIMENSIONS ARE OUT TO OUT.

PROJECT NO. BD-5101P

MARTIN COUNTY

STATION: 12+98.94 -L-

SHEET 5 OF 5

STATE OF NORTH CAROLINA
DEPARTMENT OF TRANSPORTATION
RALEIGH

STANDARD

18'' STEEL PIPE PILE

NORTH CAROLINA PROFESSIONAL SEAL 14045 ENGINEER TIMOTHY L. COGGINS
09/30/13

REVISIONS						SHEET NO.
NO.	BY:	DATE:	NO.	BY:	DATE:	S-20
1			3			TOTAL SHEETS
2			4			

STD. NO. SPP3

ASSEMBLED BY : REZA KOUCHEKI		DATE : 9/23/13	
CHECKED BY : T.L. COGGINS		DATE : 9/26/13	
DRAWN BY : RWW 1/01	REV. 10/1/05	LBG/TLA	
CHECKED BY : LES 1/01	REV. 5/1/06R	MAA/KMM	
	REV. 10/1/11	MAA/GM	

27-SEP-2013 10:14
S:\DPGI\Tim\Division 1 LIBR\BD-5101P\gkoucheki\B5101P_SD_CS.dgn
tcoggins

NOTES :

FOR BERM WIDTH DIMENSIONS, SEE GENERAL DRAWING.

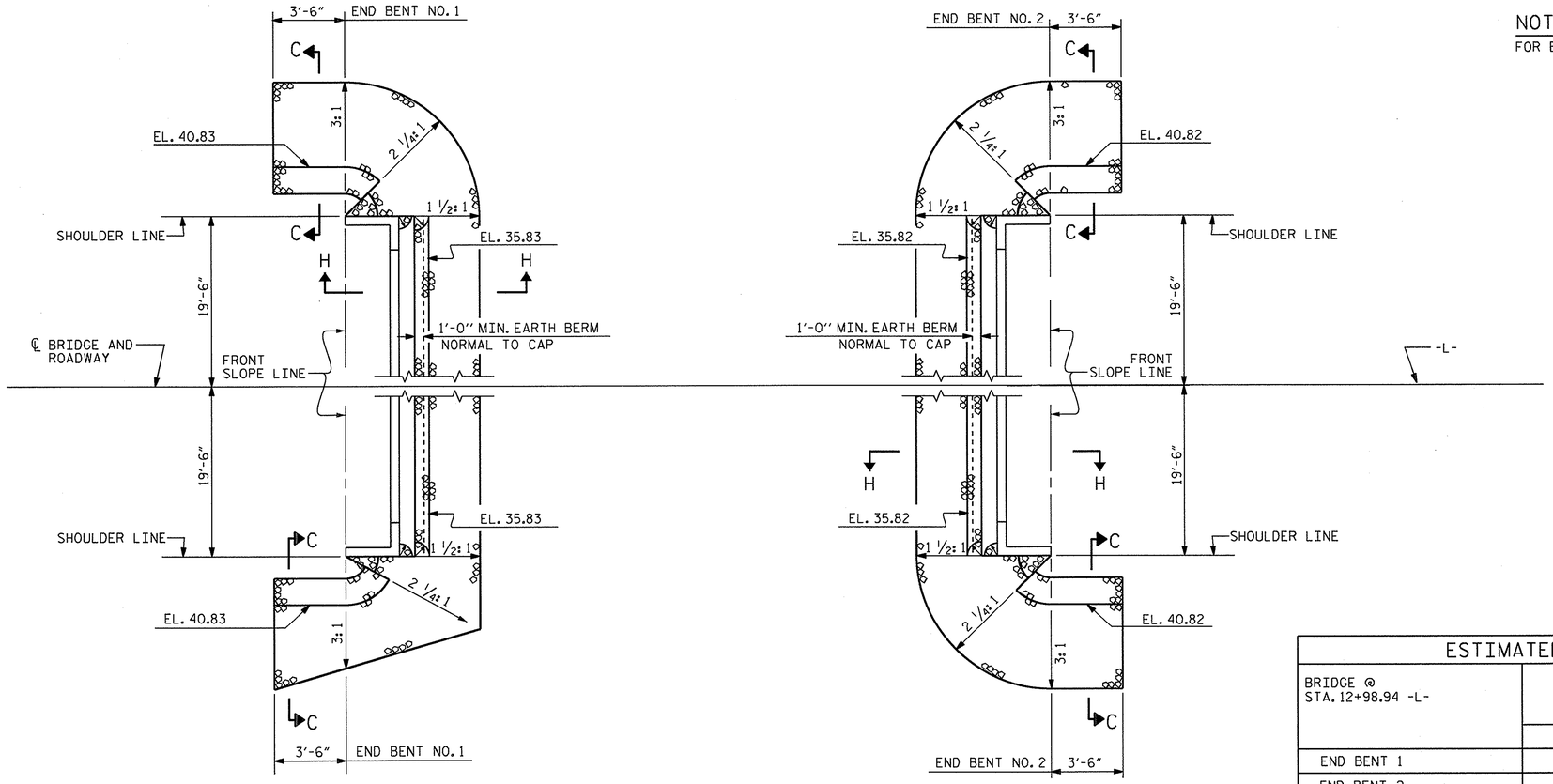

SHOULDER RIP RAP IS HIGHER THAN BERM RIP RAP

ESTIMATED QUANTITIES		
BRIDGE @ STA. 12+98.94 -L-	RIP RAP CLASS II (2'-0" THICK)	GEOTEXTILE FOR DRAINAGE
	TONS	SQUARE YARDS
END BENT 1	135	150
END BENT 2	110	123

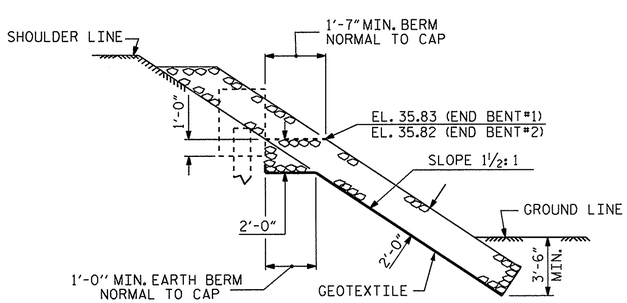

SECTION H-H

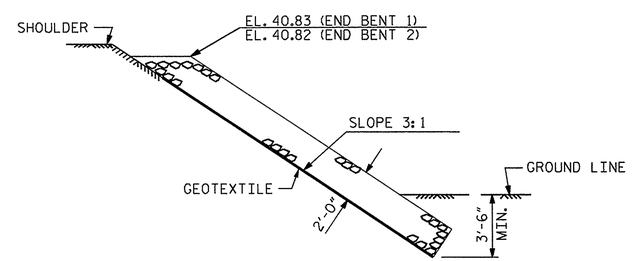

SECTION C-C

PROJECT NO. BD-5101P

MARTIN COUNTY

STATION: 12+98.94 -L-

STATE OF NORTH CAROLINA
DEPARTMENT OF TRANSPORTATION
RALEIGH

STANDARD

RIP RAP DETAILS

NORTH CAROLINA PROFESSIONAL SEAL 14045 ENGINEER TIMOTHY L. COGGINS
11/04/2013

REVISIONS						SHEET NO.
NO.	BY:	DATE:	NO.	BY:	DATE:	S-21
1			3			TOTAL SHEETS
2			4			

ASSEMBLED BY : REZA KOUCHEKI DATE : 9/05/13
CHECKED BY : T.L. COGGINS DATE : 9/26/13

DRAWN BY : REK 1/84
CHECKED BY : RDU 1/84

REV. 5/1/06R TLA/GM
REV. 10/1/11 MAA/GM
REV. 12/21/11 MAA/GM

04-NOV-2013 10:04
S:\DPGI\Tim\Division 1 LIBR\BD-5101P\gkoucheki\B5101P_SD_CS.dgn
tcoggins

STD. NO. RR1 (Sht 2)

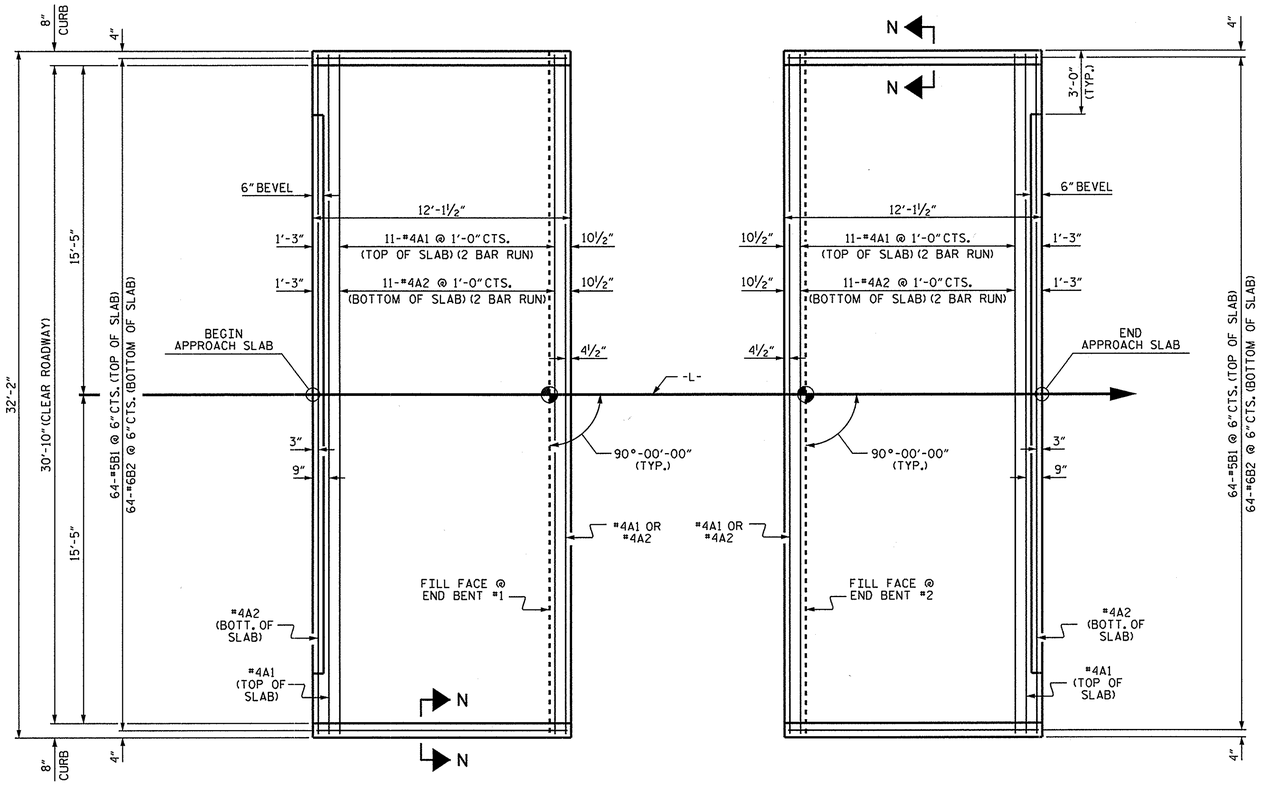

PLAN @ END BENT #1

PLAN @ END BENT #2

DIMENSIONS SHOWN ARE TYPICAL FOR BOTH APPROACH SLABS

NOTES

FOR REINFORCED BRIDGE APPROACH FILL INCLUDING GEOTEXTILE, IMPERMEABLE GEOMEMBRANE, 4" Ø DRAINAGE PIPE, #78M STONE, AND SELECT MATERIAL, SEE ROADWAY PLANS.

AREA BETWEEN THE WINGWALL AND APPROACH SLAB SHALL BE GRADED TO DRAIN THE WATER AWAY FROM THE FILL FACE OF THE BRIDGE AND SHALL BE PAVED. SEE ROADWAY PLANS.

APPROACH SLAB GROOVING IS NOT REQUIRED.

BILL OF MATERIAL

APPROACH SLAB AT EB #1

BAR	NO.	SIZE	TYPE	LENGTH	WEIGHT
* A1	26	#4	STR	16'-11"	294
A2	26	#4	STR	16'-9"	291
* B1	64	#5	STR	11'-2"	745
B2	64	#6	STR	11'-8"	1121
REINFORCING STEEL				LBS.	1412
* EPOXY COATED REINFORCING STEEL				LBS.	1039
CLASS AA CONCRETE				C.Y.	18.6

APPROACH SLAB AT EB #2

BAR	NO.	SIZE	TYPE	LENGTH	WEIGHT
* A1	26	#4	STR	16'-11"	294
A2	26	#4	STR	16'-9"	291
* B1	64	#5	STR	11'-2"	745
B2	64	#6	STR	11'-8"	1121
REINFORCING STEEL				LBS.	1412
* EPOXY COATED REINFORCING STEEL				LBS.	1039
CLASS AA CONCRETE				C.Y.	18.6

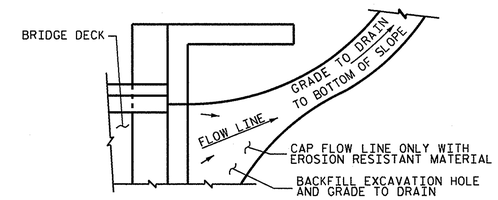

NOTE: IF THE APPROACH SLAB IS NOT CONSTRUCTED IMMEDIATELY AFTER THE BACKFILLING OF THE END BENT EXCAVATION, GRADE TO DRAIN TO THE BOTTOM OF THE SLOPE AND PROVIDE EROSION RESISTANT MATERIAL, SUCH AS FIBERGLASS ROVING OR AS DIRECTED BY THE ENGINEER TO PREVENT SOIL EROSION AND TO PROTECT THE AREA ADJACENT TO THE STRUCTURE. THE CONTRACTOR WILL BE REQUIRED TO REMOVE THESE MATERIALS PRIOR TO CONSTRUCTION OF THE APPROACH SLAB.

TEMPORARY DRAINAGE DETAIL

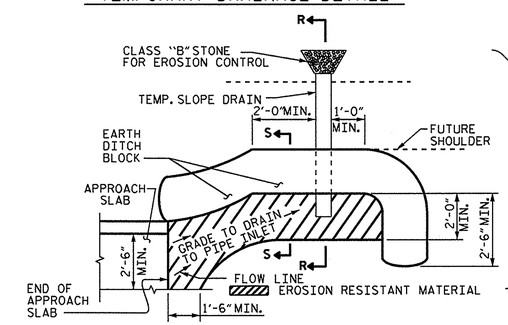

NOTE: IMMEDIATELY AFTER THE CONSTRUCTION OF THE APPROACH SLAB, THE CONTRACTOR SHALL PROVIDE TEMPORARY BERM AND SLOPE DRAIN. CONTRACTOR SHALL GRADE TO PIPE INLET AND PROVIDE EROSION RESISTANT MATERIAL AS SHOWN. THE EROSION RESISTANT MATERIAL SHALL BE EITHER 1) ASPHALT PLANT MIX, TYPE 1 OR TYPE 2, MIN. 2" DEPTH, 2) EROSION CONTROL MAT, OR 3) CONCRETE, AS DIRECTED BY THE ENGINEER. THE SLOPE DRAIN SHALL CONSIST OF A NON-PERFORATED TEMPORARY DRAINAGE PIPE, 12 INCHES IN DIAMETER.

PLAN VIEW

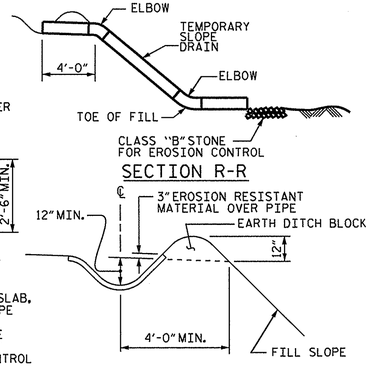

SECTION S-S

TEMPORARY BERM AND SLOPE DRAIN DETAILS

(TO BE USED WHEN SHOULDER BERM GUTTER IS REQUIRED)

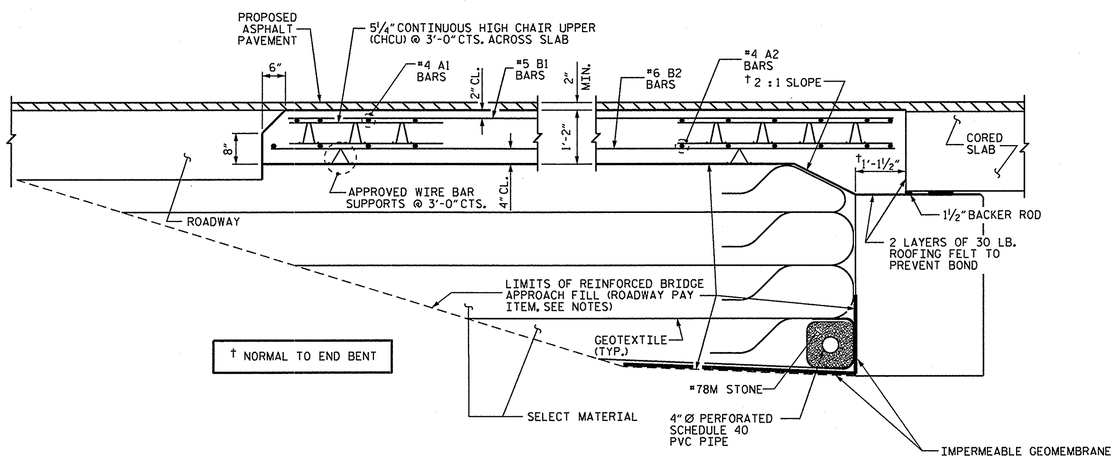

† NORMAL TO END BENT

SECTION THRU SLAB

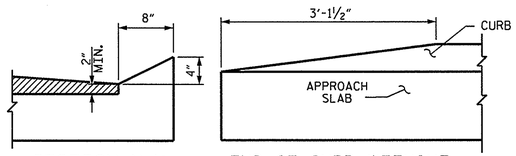

SECTION N-N

END OF CURB WITHOUT SHOULDER BERM GUTTER

CURB DETAILS

SPLICE LENGTHS		
BAR SIZE	EPOXY COATED	UNCOATED
#4	2'-0"	1'-9"
#5	2'-6"	2'-2"
#6	3'-10"	2'-7"

NORTH CAROLINA PROFESSIONAL SEAL 14045 ENGINEER TIMOTHY L. COGGINS

09/30/13

PROJECT NO. BD-5101P

MARTIN COUNTY

STATION: 12+98.94 -L-

STATE OF NORTH CAROLINA
DEPARTMENT OF TRANSPORTATION
RALEIGH

STANDARD
BRIDGE APPROACH SLAB
FOR PRESTRESSED CONCRETE
CORED SLAB UNIT
(SUB-REGIONAL TIER)
90° SKEW

REVISIONS							SHEET NO.
NO.	BY:	DATE:	NO.	BY:	DATE:		S-22
1			3				TOTAL SHEETS
2			4				

ASSEMBLED BY : REZA KOUCHEKI DATE : 9/23/13
CHECKED BY : T.L. COGGINGS DATE : 9/26/13
DRAWN BY : SHS/MAA 5-09
CHECKED BY : BCH 5-09
REV. 12-11 MAA/AAC

27-SEP-2013 10:12
S:\DPG1\Tim\Division 1 LIBR\BD-5101P\gkoucheki\B5101P_SD_CS.dgn
tcoggins

STD. NO. BAS_33_90S