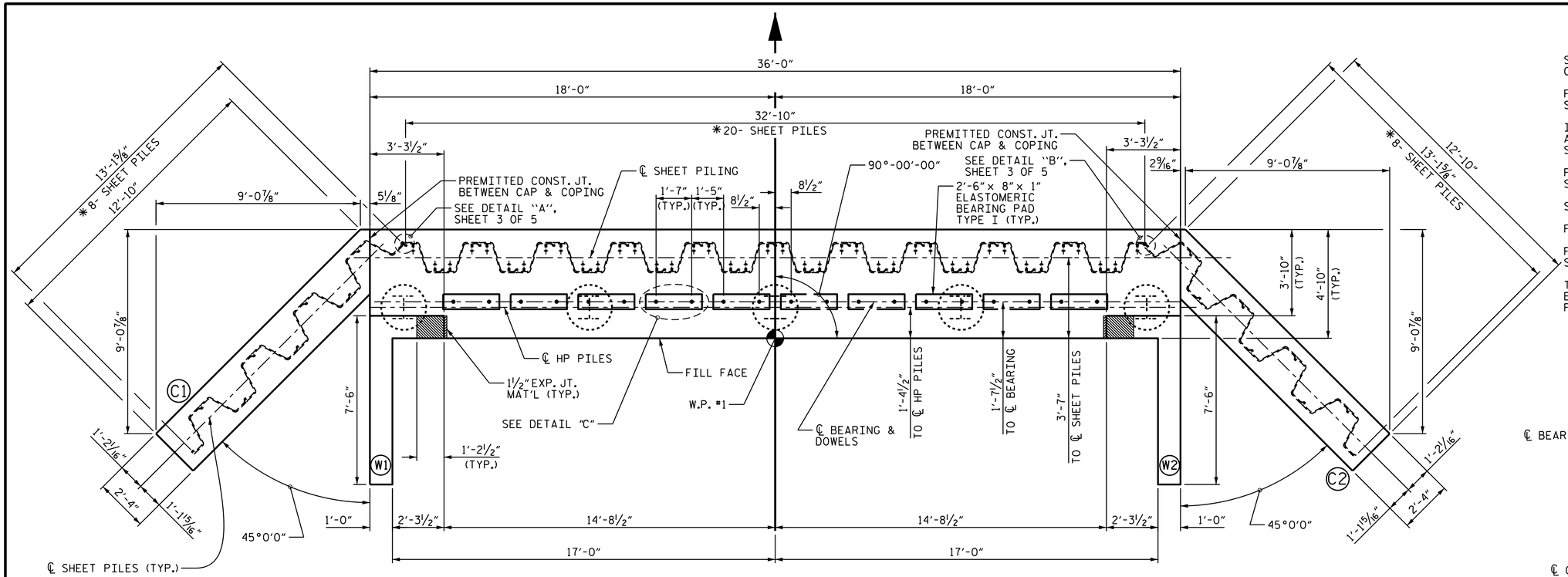

PLAN

--- NOTES ---

STIRRUPS IN CAP MAY BE SHIFTED AS NECESSARY TO CLEAR DOWELS.

FOR PILE SPLICE DETAILS, SEE END BENT 1 SHEET 5 OF 5.

INSTALL THE 4" DIA. DRAIN PIPE THROUGH THE WING AS REQUIRED FOR REINFORCED BRIDGE APPROACH FILLS, SEE THE ROADWAY PLANS.

FOR ANCHOR STUD DETAILS AND LOCATION, SEE END BENT 1 SHEET 2 OF 5.

STEEL SHEET PILES ARE TO BE GALVANIZED.

FOR STEEL SHEET PILES, SEE SPECIAL PROVISIONS.

FOR ELEVATION VIEW OF SHEET PILING, SEE END BENT 1 SHEET 2 OF 5.

THE CONCRETE IN THE SHADED AREA OF THE WING SHALL BE POURED AFTER THE BARRIER RAIL IS CAST IF SLIP FORMING IS USED.

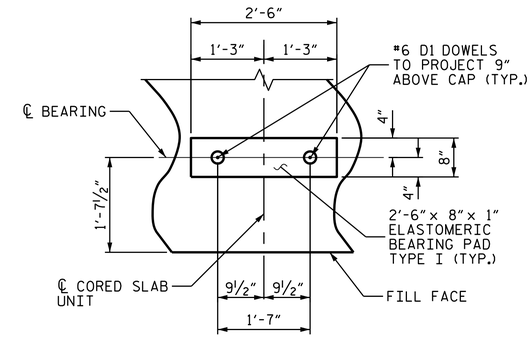

DETAIL "C"

* PZ-40 OR EQUIVALENT SECTION MODULUS OF 55.2 in3/ft.

TOP OF PILE ELEVATIONS	
1	0.84
2	1.17
3	1.50
4	1.83
5	2.16

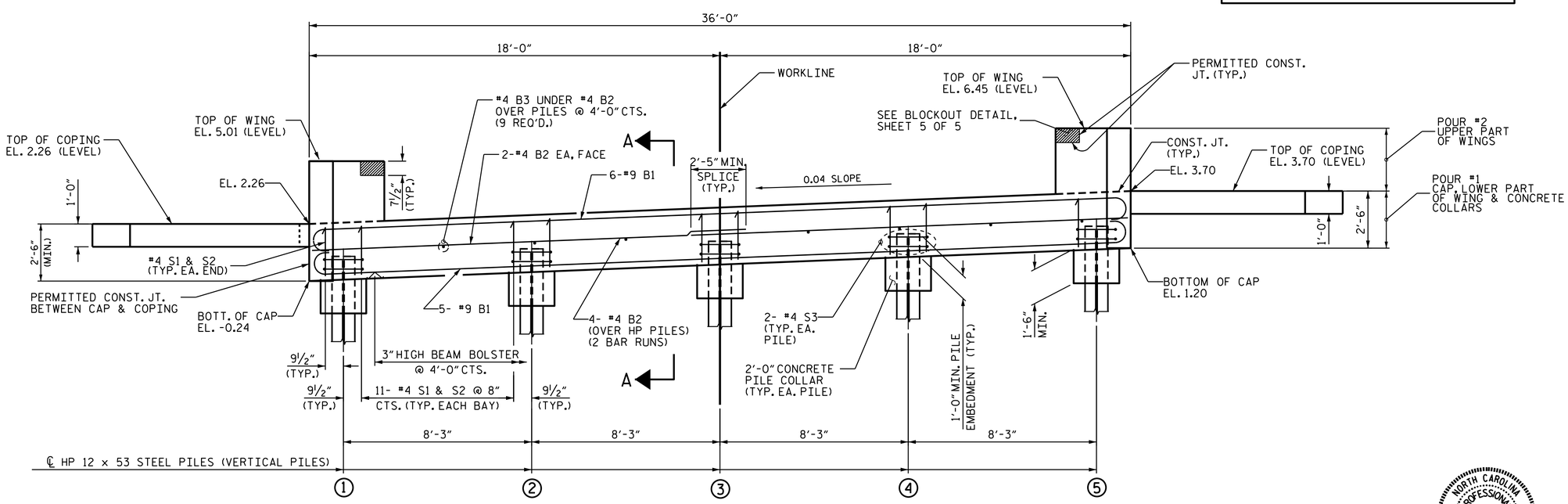

ELEVATION

SHEET PILING NOT SHOWN FOR CLARITY.

PROJECT NO. 17BP.1.R.68

CAMDEN COUNTY

STATION: 13+30.50 -L-

SHEET 1 OF 5

STATE OF NORTH CAROLINA
DEPARTMENT OF TRANSPORTATION
RALEIGH

SUBSTRUCTURE
END BENT 1

NORTH CAROLINA PROFESSIONAL SEAL 21271 ENGINEER GREGORY W. DICKEY

DocuSigned by: Greg Dickey 4/24/2015
884E46B8CE5B4B6...

REVISIONS								SHEET NO.
NO.	BY:	DATE:	NO.	BY:	DATE:			S-8
1			3					TOTAL SHEETS
2			4					18

DRAWN BY : N. Ruffin DATE : 3/9/15
CHECKED BY : K.P. SEDAI DATE : 4/1/15
DESIGN ENGINEER OF RECORD: N. RUFFIN DATE : 4/10/15

24-APR-2015 10:24
S:\DPGI\Division1\17BP.1.R.68\FinalPlans\DocuSign Setup\401_000_17BP.1.R.68_SMU_S-0.dgn
nruffin