DocuSign Envelope ID: 6A475289-E176-40FB-A6FB-58ED4C9EAB0C

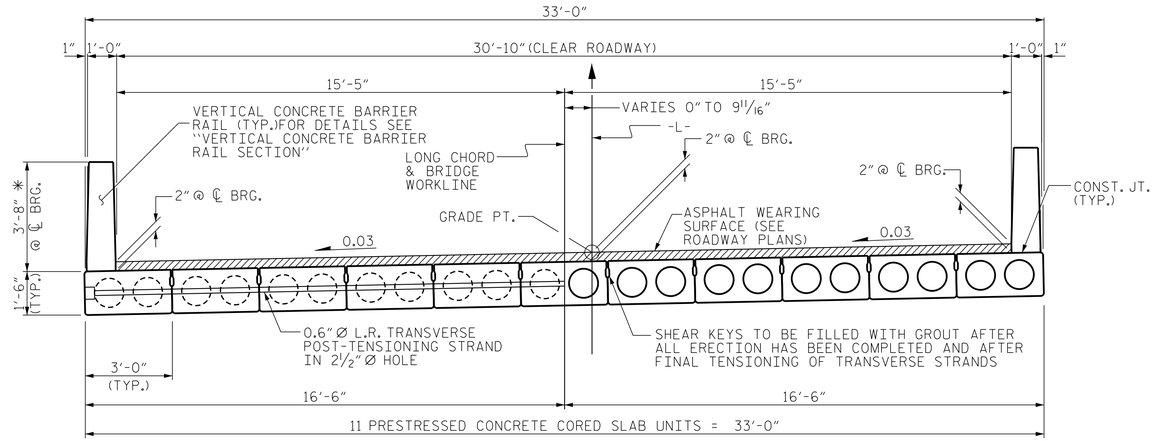

HALF SECTION
AT INTERMEDIATE DIAPHRAGMS

HALF SECTION
THROUGH VOIDS

TYPICAL SECTION

✳ - THE MAXIMUM BARRIER RAIL HEIGHT AND ASPHALT THICKNESS IS SHOWN. THE HEIGHT OF THE BARRIER RAIL AND ASPHALT THICKNESS VARIES WHILE THE TOP OF THE BARRIER RAIL FOLLOWS THE PROFILE OF THE GUTTERLINE. FOR RAIL HEIGHT DETAILS AND ASPHALT THICKNESS SEE THE "VERTICAL CONCRETE BARRIER RAIL SECTION" DETAIL.

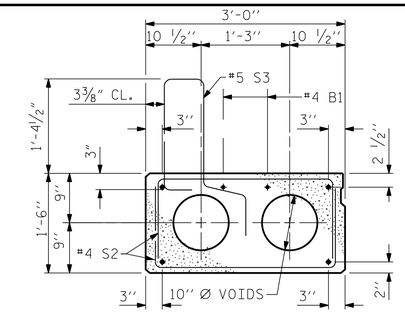

EXTERIOR SLAB SECTION
(FOR PRESTRESSED STRAND LAYOUT, SEE INTERIOR SLAB SECTION)

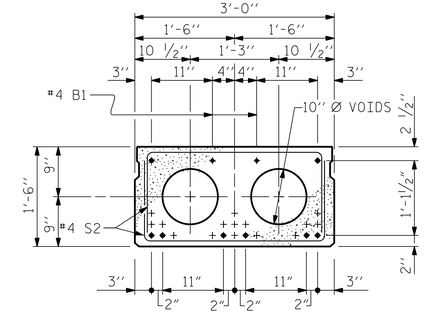

INTERIOR SLAB SECTION -
25'-7 3/4" UNIT SPAN A
(8 STRANDS REQUIRED)

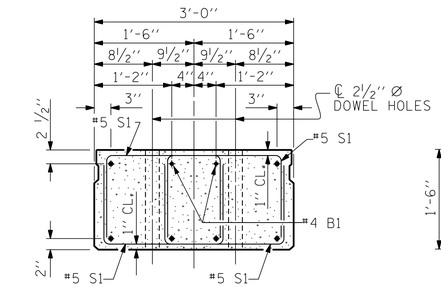

END ELEVATION

SHOWING PLACEMENT OF DOUBLE STIRRUPS AND LOCATION OF DOWEL HOLES (STRAND LAYOUT NOT SHOWN)
INTERIOR SLAB SECTION SHOWN-EXTERIOR SLAB SECTION SIMILAR EXCEPT SHEAR KEY LOCATION.

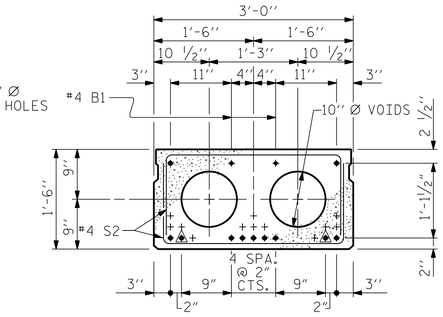

INTERIOR SLAB SECTION -
35'-7 3/4" SPAN B
(11 STRANDS REQUIRED)

0.6" Ø LOW RELAXATION STRAND LAYOUT

BOND SHALL BE BROKEN ON THESE STRANDS FOR A DISTANCE OF 4'-0" FROM END OF CORED SLAB UNIT. SEE STANDARD SPECIFICATIONS, ARTICLE 1078-7.

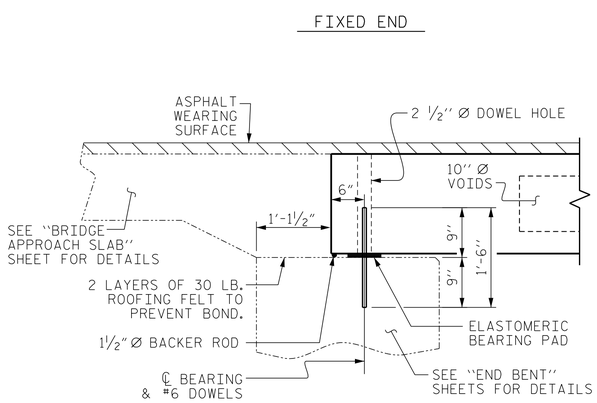

SECTION AT END BENT

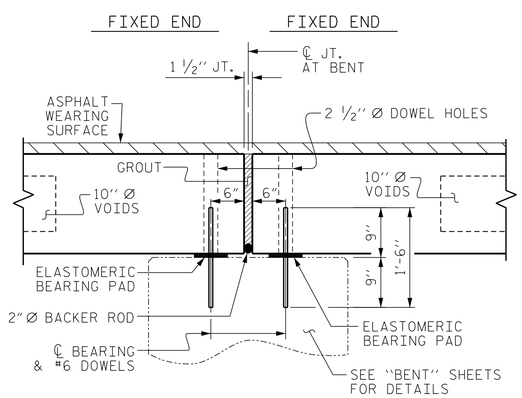

SECTION AT BENT

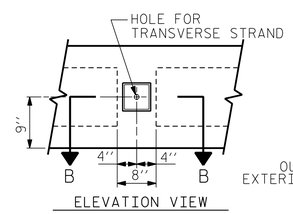

ELEVATION VIEW

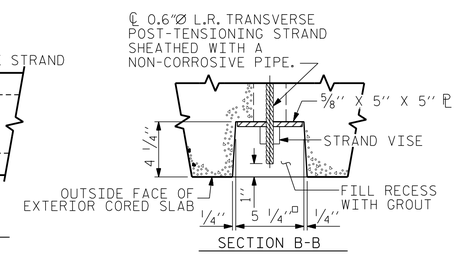

SECTION B-B

GROUTED RECESS AT END OF POST-TENSIONED STRAND-CORED SLABS

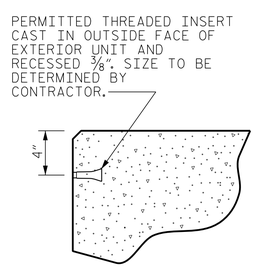

THREADED INSERT DETAIL

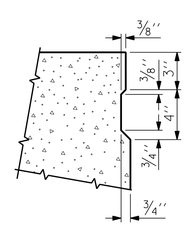

SHEAR KEY DETAIL

NOTE: OMIT SHEAR KEY ON OUTSIDE FACE OF EXTERIOR CORED SLABS.

PROJECT NO. B-5139
PASQUOTANK COUNTY
STATION: 19+44.50 -L-

SHEET 1 OF 5

STATE OF NORTH CAROLINA
DEPARTMENT OF TRANSPORTATION
RALEIGH

STANDARD
3'-0" X 1'-6"
PRESTRESSED CONCRETE CORED SLAB UNIT
90° SKEW

ASSEMBLED BY : J. PENDERGRAFT	DATE : 10-14
CHECKED BY : J. DILWORTH	DATE : 10-14

DRAWN BY : WJH 4/89	REV. 5/1/06R	TLA/GM
CHECKED BY : FCJ 5/89	REV. 10/1/11	MAA/GM
	REV. 8/14	RWW/TMG

WETHERILL ENGINEERING
559 Jones Franklin Rd. Suite 164
Raleigh, N.C. 27606
Bus: 919 851 8077
Fax: 919 851 8107
License: F-0377
TRANSPORTATION PLANNING/DESIGN - BRIDGE/STRUCTURE DESIGN
CIVIL/SITE DESIGN - GIS/GPS - CONSTRUCTION OBSERVATION

NORTH CAROLINA PROFESSIONAL SEAL 22072 ENGINEER ARTHUR DILWORTH
3/4/2015

REVISIONS						SHEET NO.
NO.	BY:	DATE:	NO.	BY:	DATE:	S-5
1			3			TOTAL SHEETS
2			4			22

STD. NO. PCS1

P:\2014\141402_B-5139_Pasquotank_2\Structures\DGN\B5139_STR_CS1.dgn
3/3/2015 11:54:52 AM