DocuSign Envelope ID: 053FA0FE-2156-4E06-83CC-171E8DFC128B

6/2/99

PAVEMENT SCHEDULE

FINAL PAVEMENT DESIGN

C1	PROP. APPROX. 3″ ASPHALT CONCRETE SURFACE COURSE, TYPE S9.5B, AT AN AVERAGE RATE OF 168 LBS. PER SQ. YD. IN EACH OF TWO LAYERS.	T	EARTH MATERIAL.
C2	PROP. VAR. DEPTH ASPHALT CONCRETE SURFACE COURSE, TYPE S9.5B, AT AN AVERAGE RATE OF 112 LBS. PER SQ. YD. PER 1″ DEPTH. TO BE PLACED IN LAYERS NOT TO EXCEED 2″ IN DEPTH.	U	EXISTING PAVEMENT.
E1	PROP. APPROX. 5½″ ASPHALT CONCRETE BASE COURSE, TYPE B25.0B, AT AN AVERAGE RATE OF 627 LBS. PER SQ. YD.	W	VARIABLE DEPTH ASPHALT PAVEMENT (SEE STANDARD WEDGING DETAIL)
E2	PROP. VAR. DEPTH ASPHALT CONCRETE BASE COURSE, TYPE B25.0B, AT AN AVERAGE RATE OF 114 LBS. PER SQ. YD. PER 1″ DEPTH. TO BE PLACED IN LAYERS NOT LESS THAN 3″ IN DEPTH OR GREATER THAN 5½″ IN DEPTH.		

NOTE: PAVEMENT EDGE SLOPES ARE 1:1 UNLESS SHOWN OTHERWISE.

PROJECT REFERENCE NO.	SHEET NO.
B-5139	2

ROADWAY DESIGN ENGINEER

NORTH CAROLINA PROFESSIONAL SEAL 21116 ENGINEER BOB A. MAY 3/16/2015

PAVEMENT DESIGN ENGINEER

WETHERILL ENGINEERING
559 Jones Franklin Rd. Suite 164
Raleigh, N.C. 27606
License No. F-0377
Bus: 919 851 8077
Fax: 919 851 8107

TRANSPORTATION PLANNING/DESIGN - BRIDGE/STRUCTURE DESIGN
CIVIL/SITE DESIGN - GIS/GPS - CONSTRUCTION OBSERVATION

NOTE: UTILIZE INCIDENTAL MILLING TO MAKE PAVEMENT TIE-INS
-L- STA. 17+00.00 TO -L- STA. 17+73.98
-L- STA. 20+00.00 TO -L- STA. 21+50.00

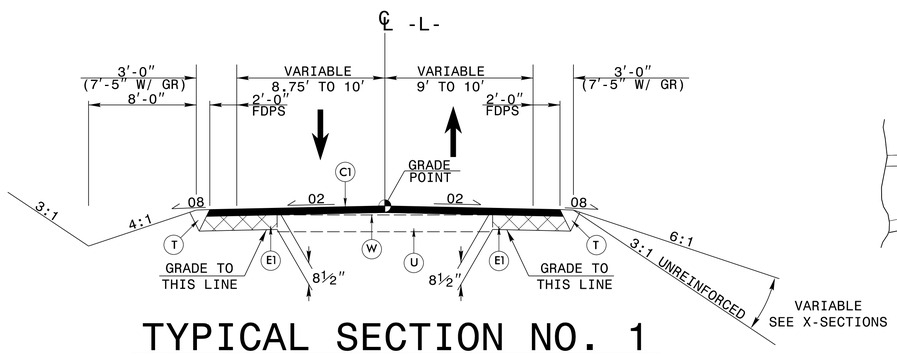

TYPICAL SECTION NO. 1

USE TYPICAL SECTION NO. 1 AS FOLLOWS:
-L- STA. 17+00.00 TO -L- STA. 19+00.00
-L- STA. 19+90.00 TO -L- STA. 21+50.00

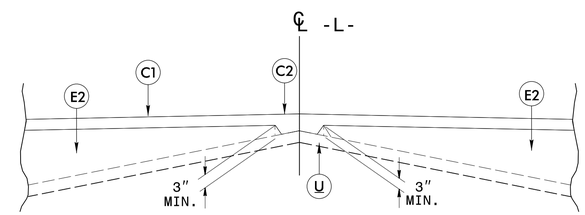

Detail Showing Method of Wedging

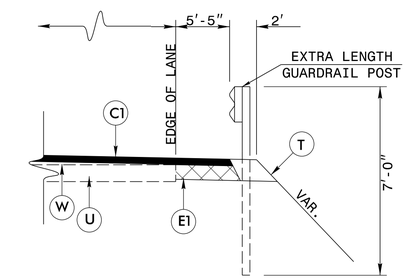

PARTIAL TYPICAL SECTION NO. 1

USE IN CONJUNCTION WITH TYPICAL SECTIONS NO. 1 & 2
-L- STA. 17+20.00 TO -L- STA. 17+75.00 RT.
-L- STA. 18+61.85 TO -L- STA. 19+11.85 LT.
-L- STA. 19+77.15 TO -L- STA. 20+27.15 LT.

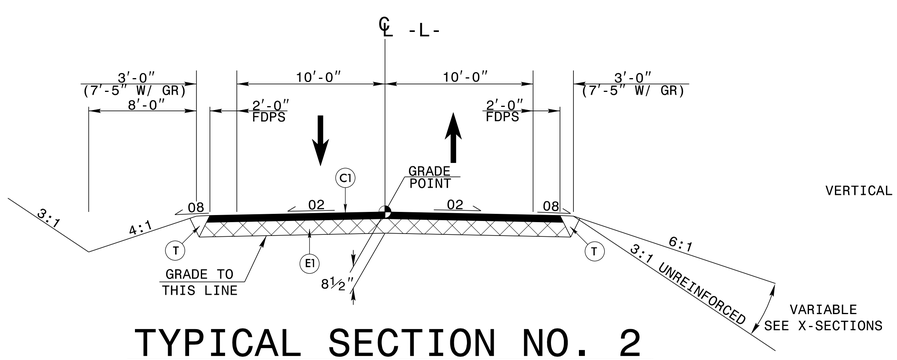

TYPICAL SECTION NO. 2

USE TYPICAL SECTION NO. 2 AS FOLLOWS:
-L- STA. 19+00.00 TO -L- STA. 19+12.65 (BEGIN BRIDGE)
-L- STA. 19+76.35 (END BRIDGE) TO -L- STA. 19+90.00

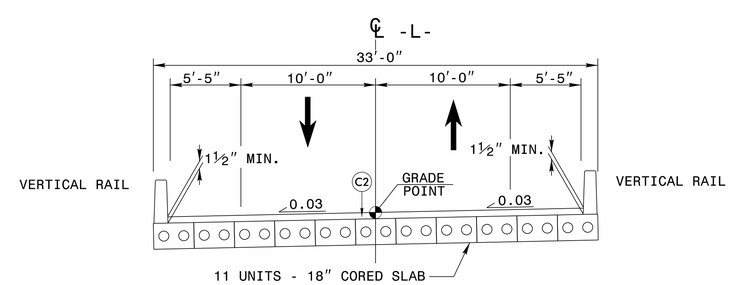

TYPICAL SECTION NO. 3

USE TYPICAL SECTION NO. 3 AS FOLLOWS:
-L- STA. 19+12.65 TO -L- STA. 19+76.35

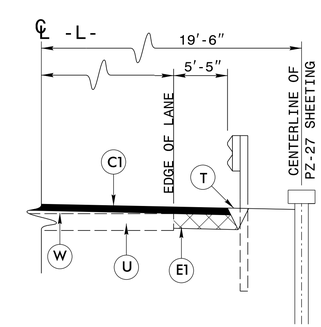

PARTIAL TYPICAL SECTION NO. 2

USE IN CONJUNCTION WITH TYPICAL SECTIONS NO. 1 & 2
-L- STA. 17+75.00 TO -L- STA. 19+13.41 RT.
-L- STA. 19+75.59 TO -L- STA. 20+25.00 RT.

3/13/2015
10:42:38 AM
P:\2014\1414.02 B-5139 Pasquotank 2\Roadway\Pre\B5139 Rdy typ.dgn