DocuSign Envelope ID: 6A475289-E176-40FB-A6FB-58ED4C9EAB0C

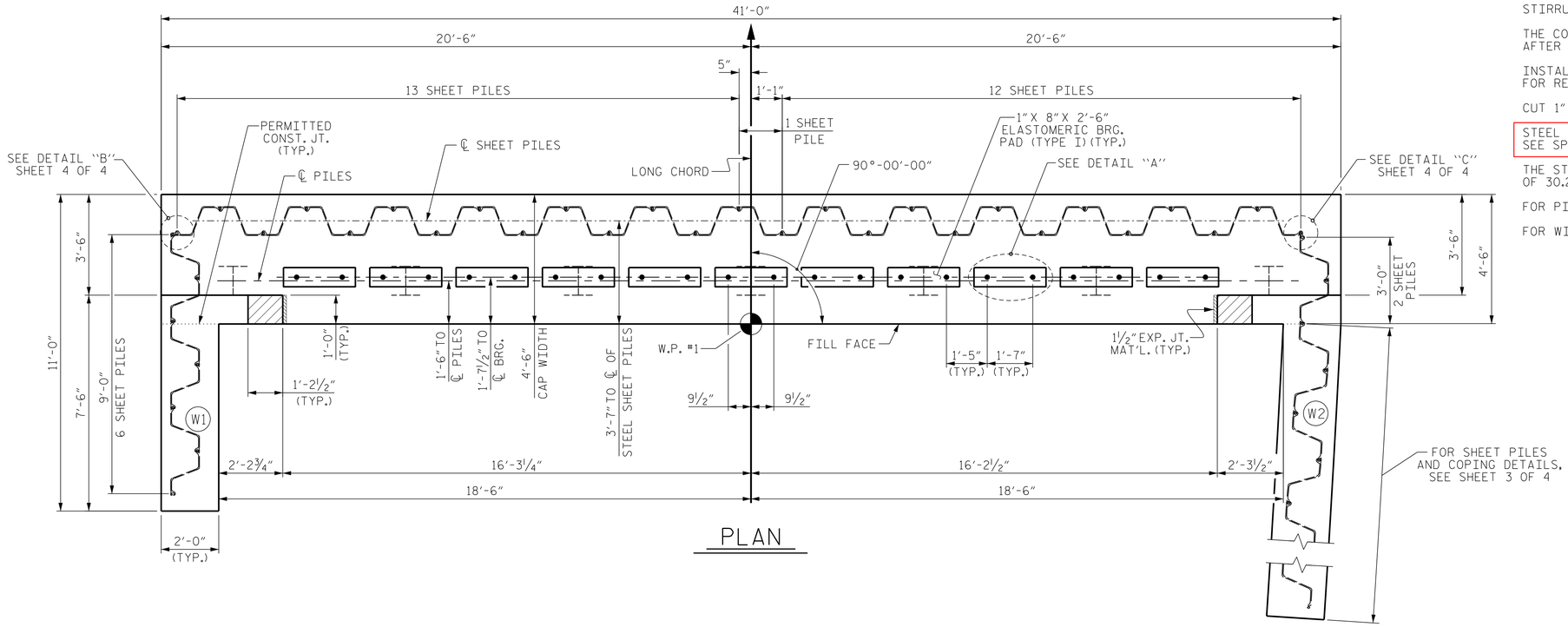

PLAN

NOTES

STIRRUPS IN CAP MAY BE SHIFTED AS NECESSARY TO CLEAR DOWELS.

THE CONCRETE IN THE SHADED AREA OF THE WING SHALL BE POURED AFTER THE CONCRETE PARAPET IS CAST IF SLIP FORMING IS USED.

INSTALL THE 4"Ø DRAIN THROUGH THE SHEET PILES AS REQUIRED. FOR REINFORCED BRIDGE APPROACH FILLS. SEE ROADWAY PLANS.

CUT 1"Ø MAX. HOLE IN SHEET PILE FOR #10 B2 BARS AS NECESSARY.

STEEL SHEET PILES SHALL BE GALVANIZED. FOR STEEL SHEET PILES, SEE SPECIAL PROVISIONS.

THE STEEL SHEET PILES SHALL HAVE A MINIMUM SECTION MODULUS OF 30.2 IN^3/FT.

FOR PILE SPLICE DETAILS, SEE SHEET 4 OF 4.

FOR WING DETAILS, SEE SHEET 2 AND 3 OF 4.

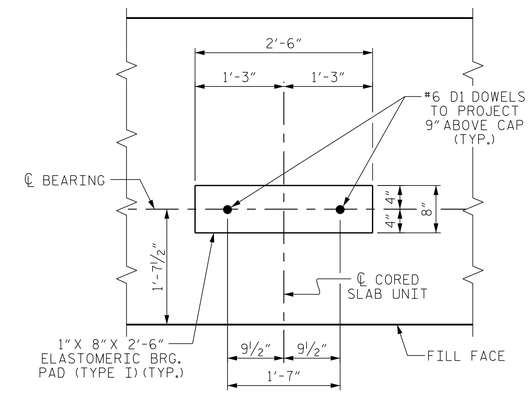

DETAIL "A"

TOP OF PILE ELEVATIONS	
1	-0.09
2	0.09
3	0.27
4	0.45
5	0.63
6	0.81
7	0.99

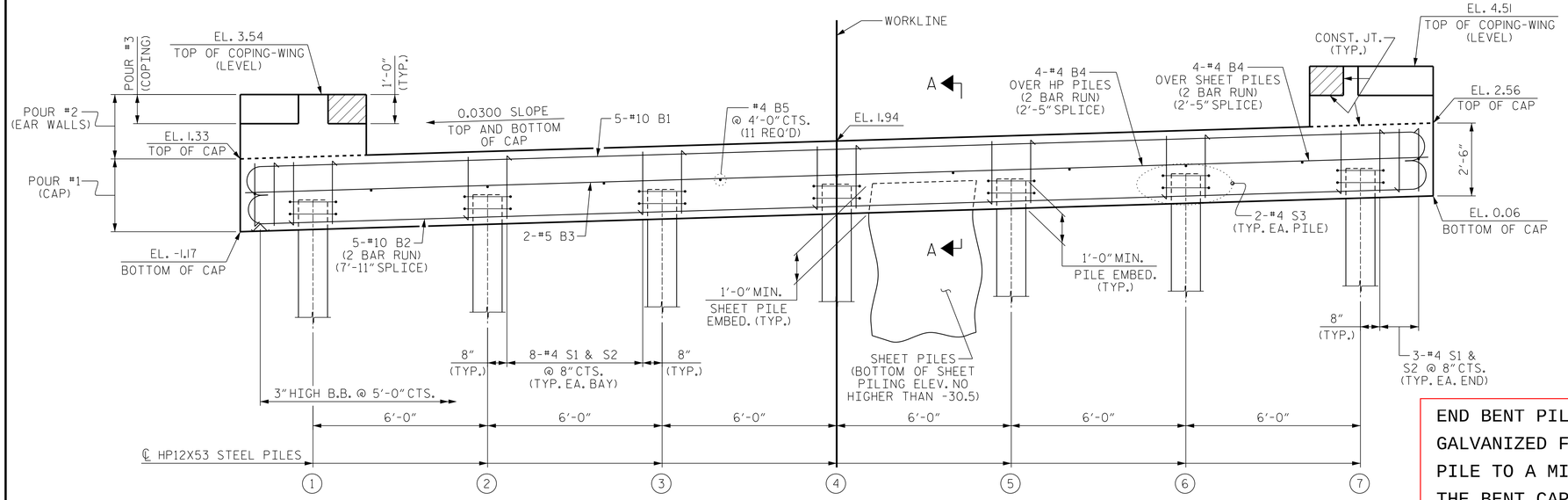

ELEVATION

SHEET PILES PARTIALLY OMTTED FOR CLARITY
FOR SECTION A-A, SEE SHEET 4 OF 4.

END BENT PILES SHALL BE GALVANIZED FROM THE TOP OF THE PILE TO A MINIMUM OF 20 BELOW THE BENT CAP.

PROJECT NO. B-5139
PASQUOTANK COUNTY
STATION: 19+44.50 -L-

SHEET 1 OF 4

STATE OF NORTH CAROLINA
DEPARTMENT OF TRANSPORTATION
RALEIGH

SUBSTRUCTURE

END BENT No. 1

NORTH CAROLINA PROFESSIONAL SEAL 22072 ENGINEER JOHN ARTHUR DILWORTH
3/4/2015

WETHERILL ENGINEERING
559 Jones Franklin Rd. Suite 164
Raleigh, N.C. 27606
Bus: 919 851 8077
Fax: 919 851 8107
License: F-0377
TRANSPORTATION PLANNING/DESIGN - BRIDGE/STRUCTURE DESIGN
CIVIL/SITE DESIGN - GIS/GPS - CONSTRUCTION OBSERVATION

REVISIONS						SHEET NO.
NO.	BY:	DATE:	NO.	BY:	DATE:	S-11
1			3			TOTAL SHEETS
2			4			22

DRAWN BY :	G.M. GILLAND	DATE :	10-14
CHECKED BY :	J.A. DILWORTH	DATE :	2-15
DESIGN ENGINEER OF RECORD :	G.M. GILLAND	DATE :	2-15

P:\2014\1411402_B-5139_Pasquotank_21\Structures\DGN\B5139_STR_EBT.dgn
3/3/2015 12:09:11 PM