DocuSign Envelope ID: 6A475289-E176-40FB-A6FB-58ED4C9EAB0C

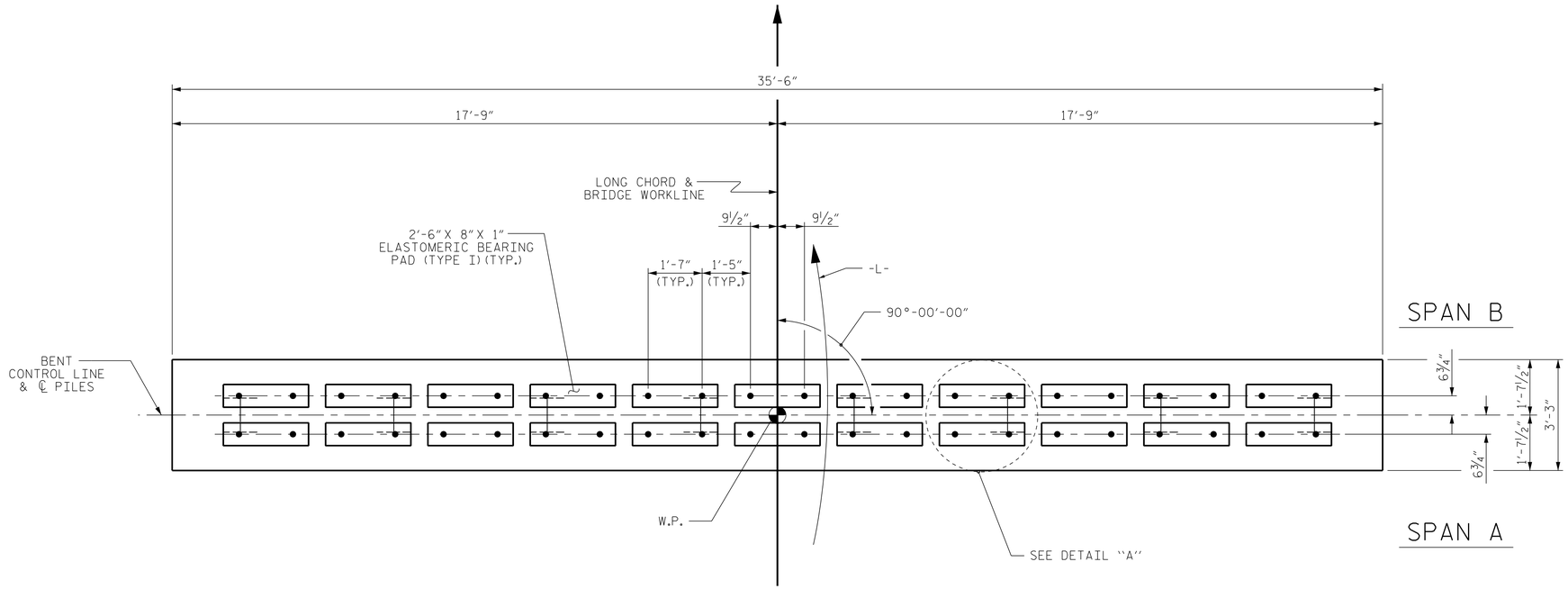

PLAN

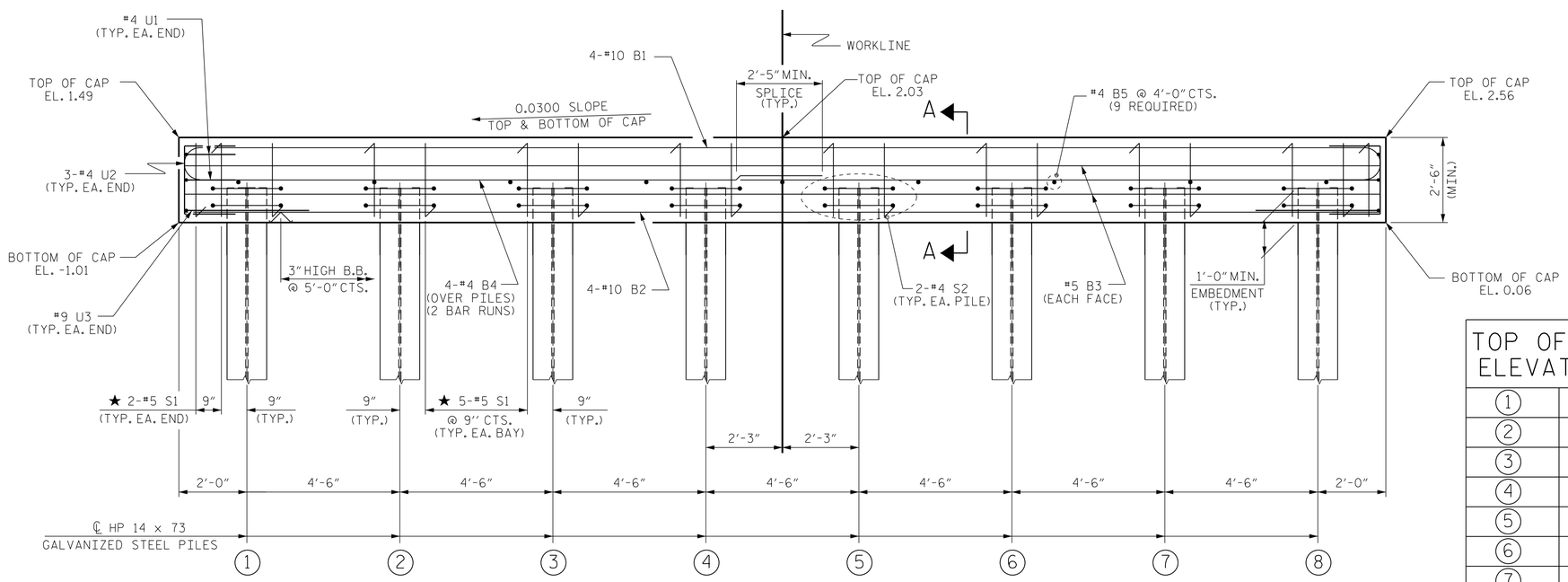

ELEVATION

FOR SECTION A-A, SEE SHEET 2 OF 2

NOTES

STIRRUPS IN CAP MAY BE SHIFTED AS NECESSARY TO CLEAR DOWELS.

★ INVERT ALTERNATE STIRRUPS.

GALVANIZE THE TOP OF EACH INTERIOR BENT PILE A MINIMUM OF 30 FEET. GALVANIZE IN ACCORDANCE WITH SECTION 1076 OF THE STANDARD SPECIFICATIONS.

INTERIOR BENT PILES SHALL BE GALVANIZED FROM THE TOP OF THE PILE TO A MINIMUM OF 20 FT BELOW THE MUDLINE.

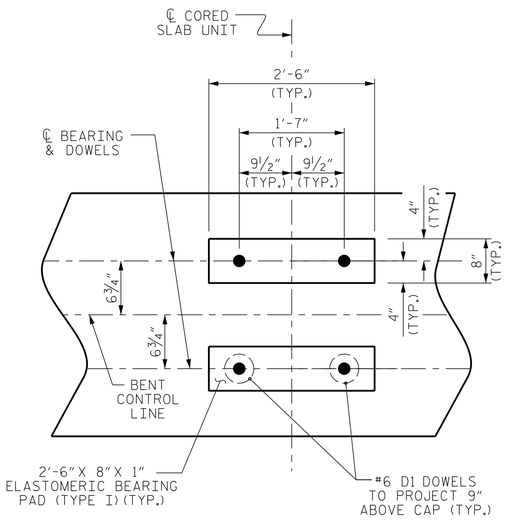

DETAIL "A"

(DIMENSIONS ARE TYPICAL EACH BEARING)

TOP OF PILE ELEVATIONS	
1	0.07
2	0.20
3	0.34
4	0.47
5	0.61
6	0.74
7	0.88
8	1.01

PROJECT NO. B-5139

PASQUOTANK COUNTY

STATION: 19+44.50 -L-

SHEET 1 OF 2

STATE OF NORTH CAROLINA
DEPARTMENT OF TRANSPORTATION
RALEIGH

SUBSTRUCTURE

BENT No. 1

ASSEMBLED BY : J. PENDERGRAFT	DATE : 12-14
CHECKED BY : J. DILWORTH	DATE : 12-14
DRAWN BY : DGE 05/10	
CHECKED BY : MKT 05/10	

DocuSigned by:
NORTH CAROLINA PROFESSIONAL SEAL 22072 ENGINEER JOHN ARTHUR DILWORTH
3/4/2015

WETHERILL ENGINEERING
559 Jones Franklin Rd. Suite 164
Raleigh, N.C. 27606
Bus: 919 851 8077
Fax: 919 851 8107
License: F-0377
TRANSPORTATION PLANNING/DESIGN - BRIDGE/STRUCTURE DESIGN
CIVIL/SITE DESIGN - GIS/GPS - CONSTRUCTION OBSERVATION

REVISIONS							SHEET NO.
NO.	BY:	DATE:	NO.	BY:	DATE:		S-15
1			3				TOTAL SHEETS
2			4				22

STD. NO. 14" HP_BT_33_90S_<60'

P:\2014\141402_B-5139 Pasquotank 2\Structures\DGN\B5139_STR_BT.dgn
3/3/2015 12:15:54 PM