DocuSign Envelope ID: 6A475289-E176-40FB-A6FB-58ED4C9EAB0C

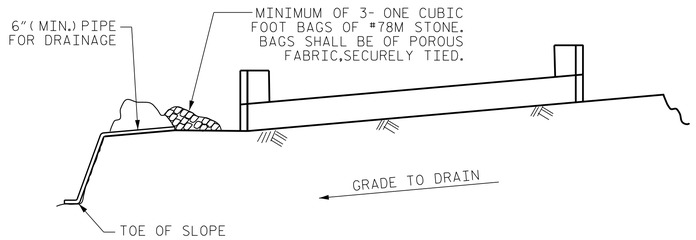

BAGGED STONE AND PIPE SHALL BE PLACED IMMEDIATELY AFTER COMPLETION OF END BENT EXCAVATION. PIPE MAY BE EITHER CONCRETE, CORRUGATED STEEL, CORRUGATED ALUMINUM ALLOY, OR CORRUGATED PLASTIC. PERFORATED PIPE WILL NOT BE ALLOWED.

BAGGED STONE SHALL REMAIN IN PLACE UNTIL THE ENGINEER DIRECTS THAT IT BE REMOVED. THE CONTRACTOR SHALL REMOVE AND DISPOSE OF SILT ACCUMULATIONS AT BAGGED STONE WHEN SO DIRECTED BY THE ENGINEER. BAGS SHALL BE REMOVED AND REPLACED WHENEVER THE ENGINEER DETERMINES THAT THEY HAVE DETERIORATED AND LOST THEIR EFFECTIVENESS.

NO SEPARATE PAYMENT WILL BE MADE FOR THIS WORK AND THE ENTIRE COST OF THIS WORK SHALL BE INCLUDED IN THE UNIT CONTRACT PRICE BID FOR THE SEVERAL PAY ITEMS.

TEMPORARY DRAINAGE AT END BENT

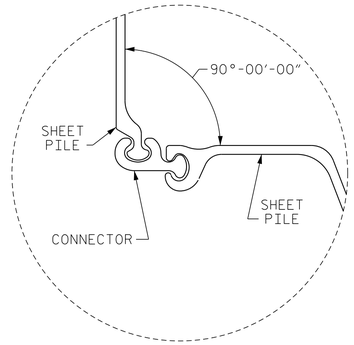

DETAIL "B"

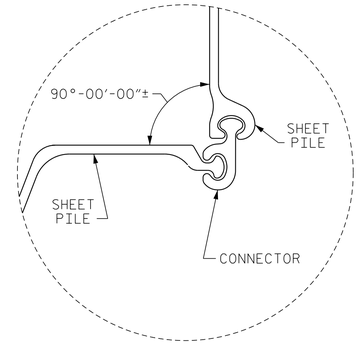

DETAIL "C"

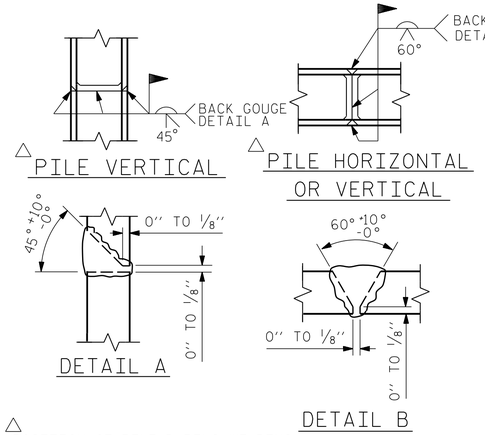

△ PILE VERTICAL

△ PILE HORIZONTAL OR VERTICAL

DETAIL A

DETAIL B

△ POSITION OF PILE DURING WELDING.

PILE SPLICE DETAILS

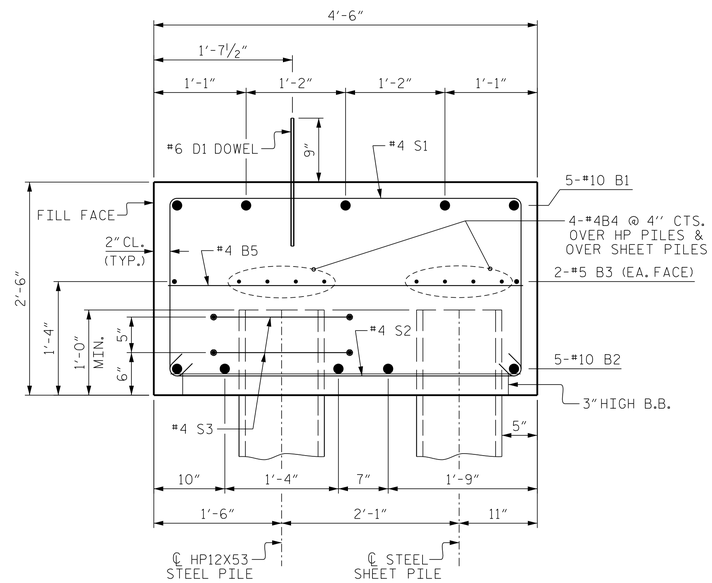

SECTION A-A

BAR TYPES

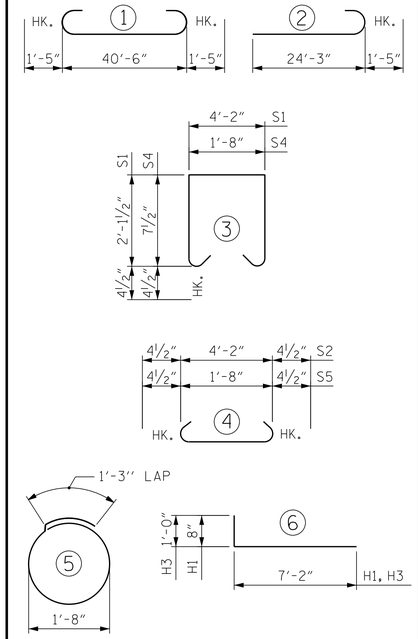

(ALL BAR DIMENSIONS ARE OUT TO OUT.)

BILL OF MATERIAL

END BENT 2

BAR	NO.	SIZE	TYPE	LENGTH	WEIGHT
B1	5	#10	1	43'-4"	932
B2	10	#10	2	25'-8"	1104
B3	2	#5	STR	40'-8"	85
B4	16	#4	STR	21'-7"	231
B5	11	#4	STR	4'-0"	29
D1	22	#6	STR	1'-6"	50
H1	4	#4	6	7'-10"	21
H2	4	#4	STR	7'-2"	19
H3	4	#6	6	8'-2"	49
H4	8	#4	STR	25'-9"	138
H5	4	#6	STR	26'-9"	161
K1	6	#4	STR	3'-10"	15
K2	6	#4	STR	3'-11"	16
S1	54	#4	3	9'-2"	331
S2	54	#4	4	4'-11"	177
S3	14	#4	5	6'-6"	61
S4	62	#4	3	3'-8"	152
S5	62	#4	4	2'-5"	100
V1	12	#4	STR	4'-2"	33
V2	12	#4	STR	4'-0"	32

REINFORCING STEEL = 3,736 LBS.

CLASS "A" CONCRETE BREAKDOWN

POUR #1 (CAP) =	17.1 C.Y.
POUR #2 (EAR WALLS)	0.7 C.Y.
POUR #3 (COPING) =	4.5 C.Y.
TOTAL =	22.3 C.Y.

HP12X53 STEEL PILES

NO. 7	630 LIN. FT
PILE REDRIVES	7 EA.

STEEL SHEET PILES

SHEETS - NO. = 70	3282 S.F.
CONNECTORS - NO. = 2	21 S.F.
TOTAL	3303 S.F.

PROJECT NO. B-5139

PASQUOTANK COUNTY

STATION: 19+44.50 -L-

SHEET 4 OF 4

STATE OF NORTH CAROLINA
DEPARTMENT OF TRANSPORTATION
RALEIGH

SUBSTRUCTURE

END BENT No. 2

REVISIONS						SHEET NO.
NO.	BY:	DATE:	NO.	BY:	DATE:	S-20
1			3			TOTAL SHEETS
2			4			22

559 Jones Franklin Rd. Suite 164
Raleigh, N.C. 27606
Bus: 919 851 8077
Fax: 919 851 8107
License: F-0377

WETHERILL ENGINEERING

TRANSPORTATION PLANNING/DESIGN - BRIDGE/STRUCTURE DESIGN
CIVIL/SITE DESIGN - GIS/GPS - CONSTRUCTION OBSERVATION

NORTH CAROLINA PROFESSIONAL SEAL 22072 ENGINEER JOHN ARTHUR DILLWORTH 3/4/2015

DRAWN BY :	G.M. GILLAND	DATE :	12-14
CHECKED BY :	J.A. DILWORTH	DATE :	2-15
DESIGN ENGINEER OF RECORD :	G.M. GILLAND	DATE :	2-15

P:\2014\141402_B-5139 Pasquotank 2\Structures\DGN\B5139_STR_EBT.dgn
3/3/2015 12:25:35 PM