DocuSign Envelope ID: 6A475289-E176-40FB-A6FB-58ED4C9EAB0C

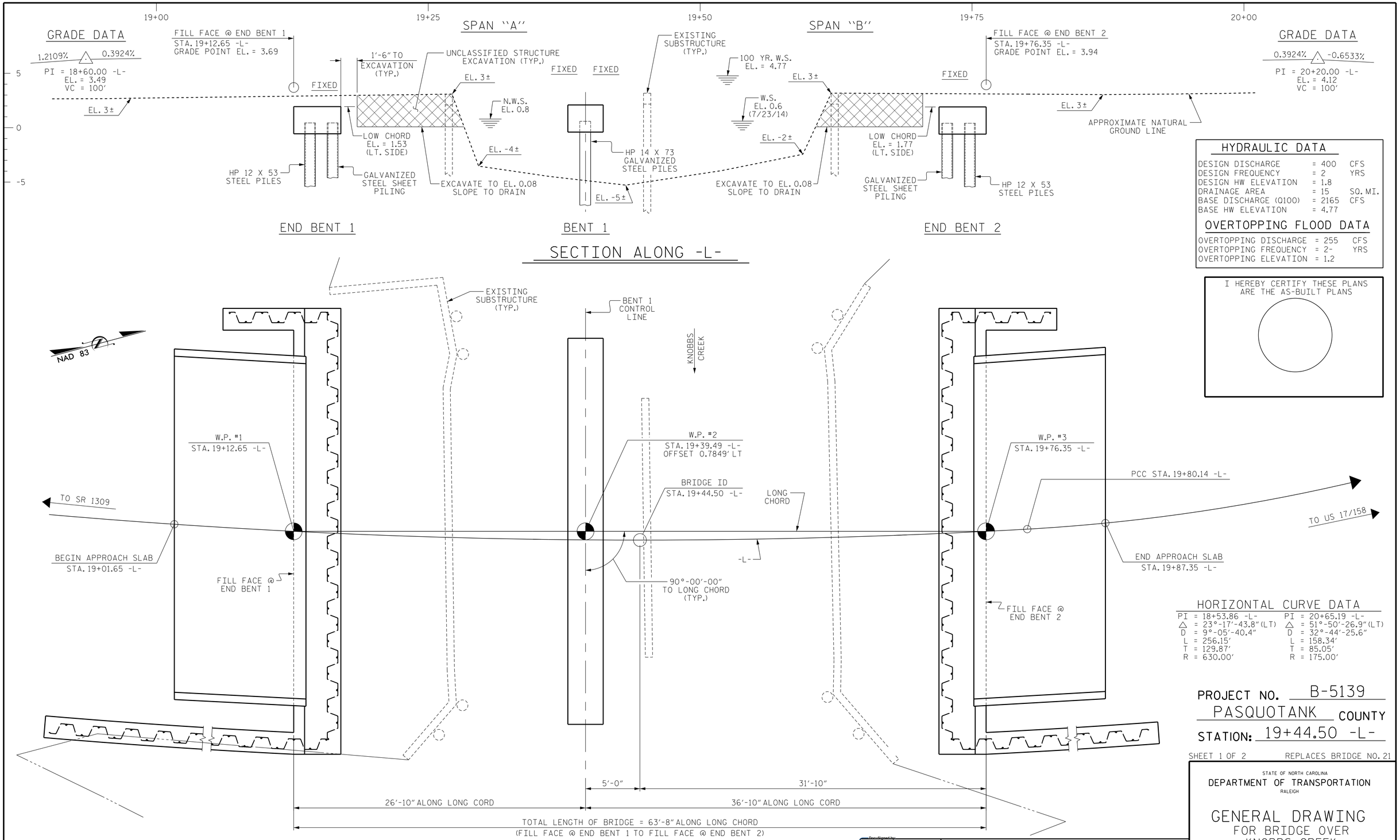

PROJECT NO. B-5139

PASQUOTANK COUNTY

STATION: 19+44.50 -L-

SHEET 1 OF 2 REPLACES BRIDGE NO. 21

STATE OF NORTH CAROLINA
DEPARTMENT OF TRANSPORTATION
RALEIGH

GENERAL DRAWING
FOR BRIDGE OVER
KNOBBS CREEK
ON SR 1332 BETWEEN
SR 1309 AND US 17/158

DocuSigned by:
NORTH CAROLINA PROFESSIONAL SEAL 22072 ENGINEER JOHN ARTHUR DILWORTH
3/4/2015

WETHERILL ENGINEERING
559 Jones Franklin Rd. Suite 164
Raleigh, N.C. 27606
Bus: 919 851 8077
Fax: 919 851 8107
License: F-0377

TRANSPORTATION PLANNING/DESIGN - BRIDGE/STRUCTURE DESIGN
CIVIL/SITE DESIGN - GIS/GPS - CONSTRUCTION OBSERVATION

REVISIONS							SHEET NO.
NO.	BY:	DATE:	NO.	BY:	DATE:		S-1
1			3				TOTAL SHEETS
2			4				22

DRAWN BY : G.M. GILLAND DATE : 10-14
CHECKED BY : J. DILWORTH DATE : 10-14

P:\2014\14114.02 B-5139 Pasquotank 21\Structures\DGN\B5139_STR_GD.dgn
3/3/2015 11:48:09 AM