DocuSign Envelope ID: 6A475289-E176-40FB-A6FB-58ED4C9EAB0C

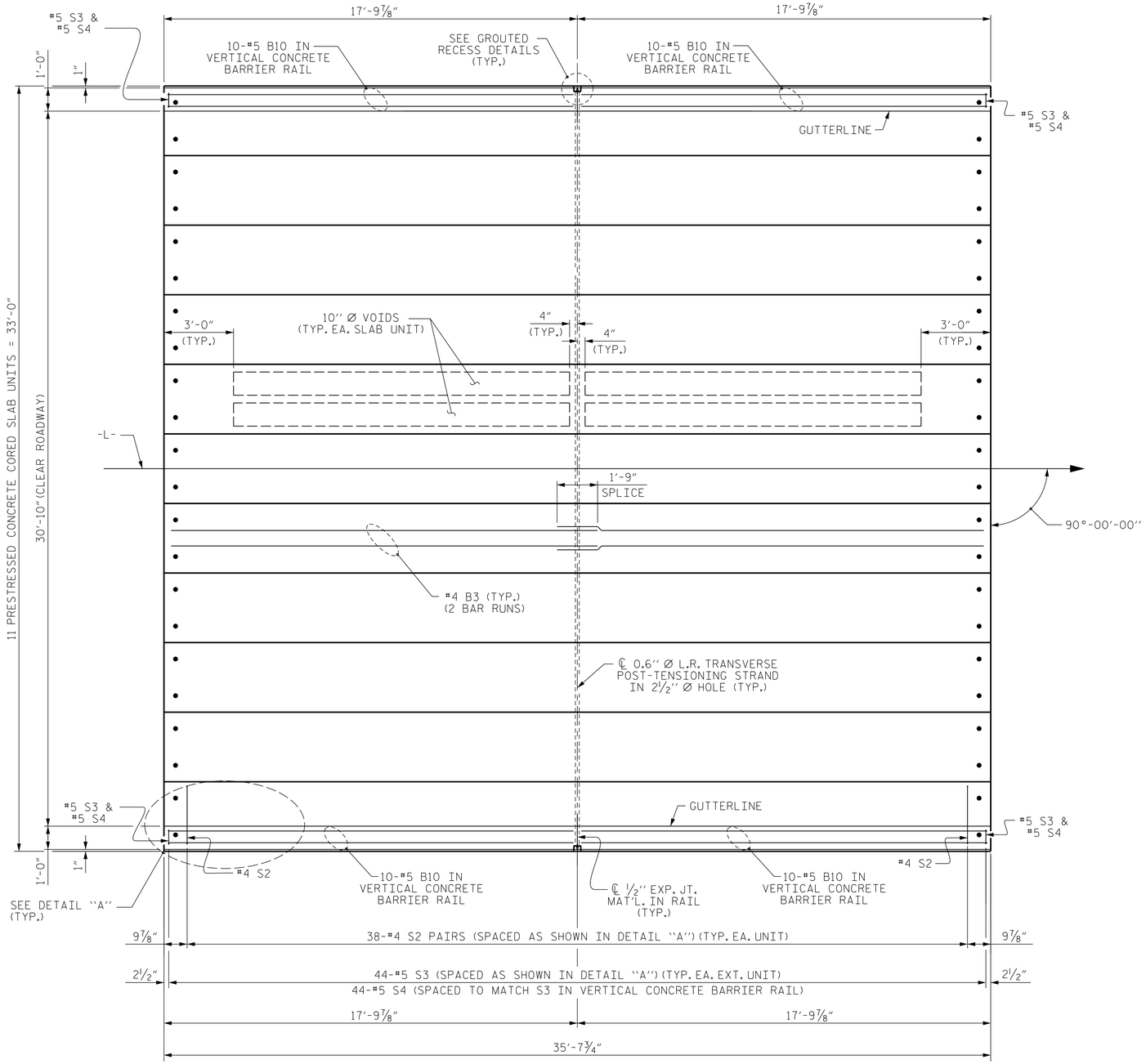

PLAN OF UNIT

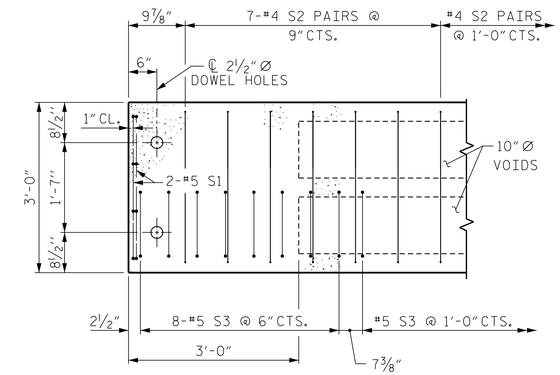

DETAIL ''A''

(TYPICAL EACH END OF UNIT)
NOTE: EXTERIOR UNIT SHOWN - INTERIOR UNIT SIMILAR EXCEPT OMIT #5 S3 BARS.

PROJECT NO. B-5139
PASQUOTANK COUNTY
STATION: 19+44.50 -L-

SHEET 3 OF 5

STATE OF NORTH CAROLINA
DEPARTMENT OF TRANSPORTATION
RALEIGH

PLAN OF
35'-7¾" UNIT
30'-10'' CLEAR ROADWAY
90° SKEW
SPAN B

REVISIONS						SHEET NO.
NO.	BY:	DATE:	NO.	BY:	DATE:	S-7
1			3			TOTAL SHEETS
2			4			22

DocuSigned by:
Signature
NORTH CAROLINA PROFESSIONAL SEAL 22072 ENGINEER JOHN ARTHUR DILWORTH
3/4/2015

WETHERILL ENGINEERING
559 Jones Franklin Rd. Suite 164
Raleigh, N.C. 27606
Bus: 919 851 8077
Fax: 919 851 8107
License: F-0377

TRANSPORTATION PLANNING/DESIGN - BRIDGE/STRUCTURE DESIGN
CIVIL/SITE DESIGN - GIS/GPS - CONSTRUCTION OBSERVATION

DRAWN BY : J. PENDERGRAFT DATE : 10-14
CHECKED BY : J. DILWORTH DATE : 10-14

P:\2014\141402_B-5139 Pasquotank 2\Structures\DGN\B5139_STR_CS2.dgn
3/3/2015 11:57:48 AM