DocuSign Envelope ID: 6A475289-E176-40FB-A6FB-58ED4C9EAB0C

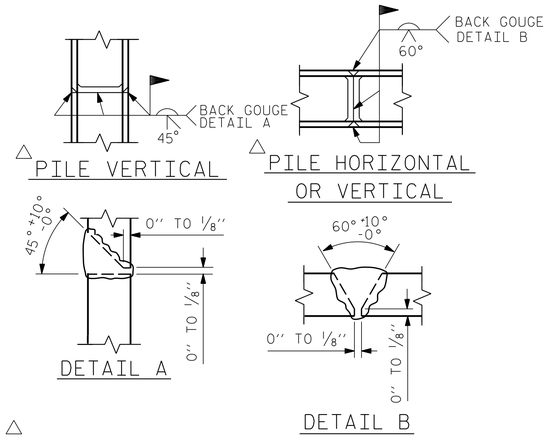

PILE SPLICE DETAILS

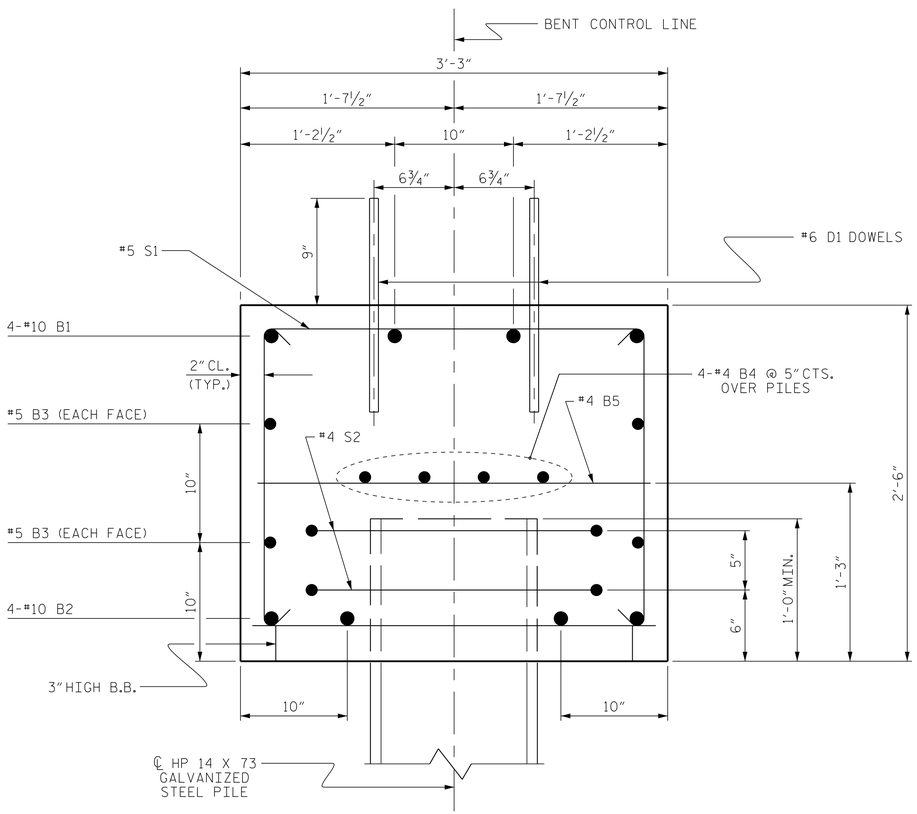

SECTION A-A

BAR TYPES

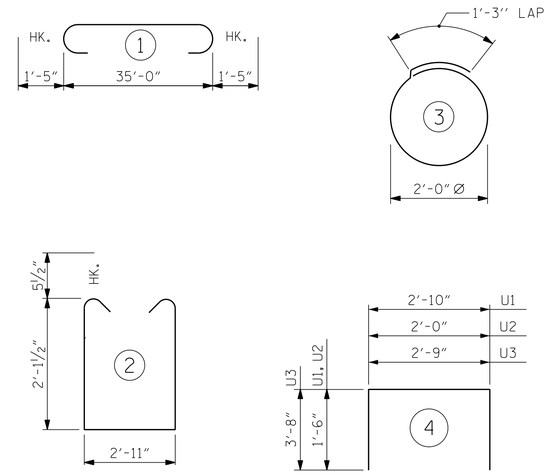

ALL BAR DIMENSIONS ARE OUT TO OUT.

BILL OF MATERIAL
FOR ONE BENT

BAR	NO.	SIZE	TYPE	LENGTH	WEIGHT
B1	4	#10	1	37'-10"	651
B2	4	#10	STR	35'-2"	605
B3	4	#5	STR	35'-2"	147
B4	8	#4	STR	18'-10"	101
B5	9	#4	STR	2'-11"	18
D1	44	#6	STR	1'-6"	99
S1	39	#5	2	8'-1"	329
S2	16	#4	3	7'-7"	81
U1	4	#4	4	5'-10"	16
U2	6	#4	4	5'-0"	20
U3	2	#9	4	10'-1"	69

REINFORCING STEEL (FOR ONE BENT) 2136 LBS

CLASS A CONCRETE BREAKDOWN (FOR ONE BENT)

TOTAL CLASS A CONCRETE 10.7 C.Y.

HP 14 X 73 GALVANIZED STEEL PILES (FOR ONE BENT)

No. 8 LIN. FT. 680

PILE REDRIVES 8 EA.

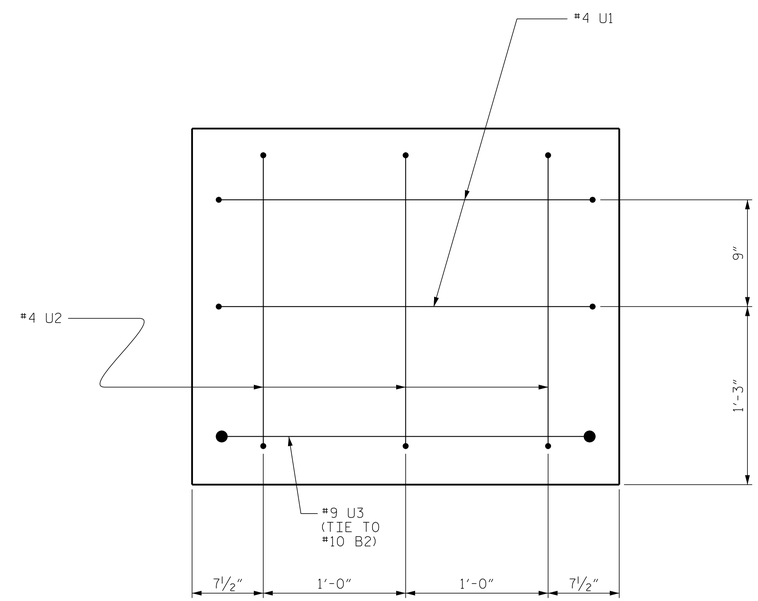

END OF CAP VIEW
(TYPICAL BOTH ENDS)

PROJECT NO. B-5139
PASQUOTANK COUNTY
STATION: 19+44.50 -L-

SHEET 2 OF 2

STATE OF NORTH CAROLINA
DEPARTMENT OF TRANSPORTATION
RALEIGH

SUBSTRUCTURE

BENT No. 1

REVISIONS						SHEET NO.
NO.	BY:	DATE:	NO.	BY:	DATE:	S-16
1			3			TOTAL SHEETS
2			4			22

DocuSigned by:
NORTH CAROLINA PROFESSIONAL SEAL 22072 ENGINEER JOHN ARTHUR DILWORTH
3/4/2015

WETHERILL ENGINEERING
559 Jones Franklin Rd. Suite 164
Raleigh, N.C. 27606
Bus: 919 851 8077
Fax: 919 851 8107
License: F-0377
TRANSPORTATION PLANNING/DESIGN - BRIDGE/STRUCTURE DESIGN
CIVIL/SITE DESIGN - GIS/GPS - CONSTRUCTION OBSERVATION

DRAWN BY :	J. PENDERGRAFT	DATE :	12-14
CHECKED BY :	J. DILWORTH	DATE :	12-14
DRAWN BY :	DGE 05/10		
CHECKED BY :	MKT 05/10		

P:\2014\141142_B-5139 Pasquotank 21\Structures\DGN\B5139_STR_BT.dgn
3/3/2015 12:17:07 PM

STD. NO. 14" HP_BT_33_90S_<60'