# PLUMBING FIXTURE SCHEDULE *

| MARK | DESCRIPTION | ALTERNATE MANUFACTURER/MODEL | ALTERNATE MANUFACTURER/MODEL |
|---|---|---|---|
| WC1 | WATER CLOSET (FLOOR MOUNT REAR OUTLET W/BACK SPUD)<br>AMERICAN STANDARD "PRIOLO FLOWISE" #3697.001, ELONGATED BOWL, 1.28 GPF, VITREOUS CHINA, AND 1 1/2" BACK SPUD. WC TO BE ADA COMPLIANT. PROVIDE OPEN FRONT SEAT, AND SENSOR W/ MANUAL OVERRIDE FLUSH VALVE, EQUAL TO SLOAN OPTIMA 140-1.28-ES-S (AC POWERED) FLUSH VALVE. | ZURN Z5647-BWL FIXTURE,<br>ZURN #ZEMS6152AV-HET, 1.28 GPF VALVE. | FIXTURE-NO 3RD CHOICE AVAILABLE.<br>HYDROTEK H-8CB-128, 1.28 GPF VALVE. |
| WC2 | WATER CLOSET (WALL MOUNT BACK SPUD)<br>AMERICAN STANDARD "AFWALL FLOWISE" #3353.128, ELONGATED BOWL, 1.28 GPF, VITREOUS CHINA, AND 1 1/2" BACK SPUD. WC TO BE ADA COMPLIANT WHERE REQUIRED. PROVIDE OPEN FRONT SEAT, AND SENSOR W/ MANUAL OVERRIDE FLUSH VALVE, EQUAL TO SLOAN OPTIMA MODEL 152-1.28-ES-S (AC POWERED) FLUSH VALVE. | ZURN #Z5617 FIXTURE. ZURN #ZEMS6140AV FLUSH VALVE. | KOHLER KINGSTON #K-4329 FIXTURE.<br>HYDROTEK H-8000C-CB FLUSH VALVE. |
| UR | URINAL<br>AMERICAN STANDARD "WASHBROOK FLOWISE" #6515.001, 1.0 GPF, VITREOUS CHINA, 3/4" BACK SPUD, AND SENSOR W/ MANUAL OVERRIDE FLUSH VALVE<br>SLOAN #195-1.0-ES-S-TMO (AC POWERED). ADA COMPLIANT. | ZURN #5760 WITH ZURN ZEMS6195AV-OB FLUSH VALVE. | TOTO #UT104EV WITH TOTO #TEU2LN11 FLUSH VALVE. |
| L1 | LAVATORY (ACCESSIBLE, WALL HUNG)<br>AMERICAN STANDARD "LUCERNE" # 0355.012 WHITE WITH CONCEALED ARM CARRIER AND DRAIN ASSEMBLY (7723.018). ADA COMPLIANT.<br>FURNISH WITH SLOAN ETF-600 AC POWERED SENSOR FAUCET. PROVIDE ACCESSORIES AS REQUIRED. COORDINATE TRIM AND SINK FAUCET DRILLING FOR 4" CNTRS OR AS REQUIRED PER OWNER. | KOHLER GREENWICH #K-2032 WITH HYDROTEK H-1000C FAUCET. | ELJER MURRAY II #051-0244 WITH AMERICAN STANDARD INNSBROOK #6059.205. |
| L2 | 2- STATION LAVATORY (ACCESSIBLE)<br>SLOAN SLOANSTONE TWO STATION LAVATORY # ELS-72600, ADA COMPLIANT, COLOR MDB-VERIFY COLOR W/ARCH. FURNISH WITH SLOAN OPTIMA ETF-600 AC POWERED SENSOR FAUCETS. | BRADLEY MODEL EXD-2N WITH HYDROTEK H-1000C FAUCET. | WILLOUGHBY MODEL WAW-2322-DMF WITH AMERICAN STANDARD INNSBROOK #6059.205. |
| L3 | 3- STATION LAVATORY (ACCESSIBLE)<br>SLOAN SLOANSTONE THREE STATION LAVATORY # ELS-73600, ADA COMPLIANT, COLOR MDB-VERIFY COLOR W/ARCH. FURNISH WITH SLOAN OPTIMA ETF-600 AC POWERED SENSOR FAUCETS. | BRADLEY MODEL EXD-3N WITH HYDROTEK H-1000C FAUCET. | WILLOUGHBY MODEL WAW-2333-DMF WITH AMERICAN STANDARD INNSBROOK #6059.205. |
| MS | MOP SINK<br>ACORN SERIES TRH, TERRAZZO SERVICE BASIN WITH REDUCED HEIGHT AND STAINLESS STEEL GRID STRAINER WITH 3" PIPE CONNECTION, 24" X 26" UNIT SIZE (VERIFY).<br>FAUCET: ACORN MODEL KFC CHROME PLATED SERVICE FAUCET WITH VACUUM BREAKER, INTEGRAL STOPS, ADJUSTABLE WALL BRACE, PAIL HOOK AND 3/4" HOSE THREAD ON SPOUT.<br>HOSE & HOSE BRACKET: ACORN MODEL KH36 LONG FLEXIBLE 5/8" RUBBER HOSE, CLOTH REINFORCED. | FLORESTONE SERIES 92 WITH SPEAKMAN #MR-371 FAUCET, HOSE AND MOP HANGER. | CRANE MOP SINK #TSB-3003 WITH #830-AA FAUCET, #832-AA HOSE, #1453-BB STRAINER, #889-CC MOP HANGER, #C-77-AA BUMPER GUARD, AND STAINLESS STEEL SPLASH GUARD. |
| CP | CIRCULATING PUMP<br>BELL & GOSSET, SERIES NBF-22 IN-LINE CIRCULATOR PUMP, 1/12 HP, 115 VAC, FLA=0.8<br>1 PH., 3/4" CONN., WITH A MAXIMUM OF 22 GPM AND 15' TDH. PUMP TO BE ALL BRONZE CONSTRUCTION, COORDINATE WITH ELEC. CONTRACTOR FOR POWER FEED. PROVIDE DISCONNECT SWITCH. | TACO MODEL #110. | ARMSTRONG MODEL #S-25. |
| EWC | HIGH/LOW ELECTRIC WATER COOLER<br>OASIS DUAL LEVEL ELECTRIC WATER COOLER. MODEL # PBACSL. ADA COMPLIANT.<br>PIPE TO SINGLE DRAIN AND SUPPLY LINE. VERIFY HIGH/LOW UNIT MOUNTING SIDES AND MODEL. | HALSEY TAYLOR #HAC8BL-Q. | ELKAY MODEL #EZSTL8LC. |
| WCS | WATER CLOSET SUPPORTS<br>ZURN 4" NO HUB #Z1203-N-X W/HEAVY-DUTY REAR ANCHOR FOR WC2. COORDINATE MODEL WITH LEFT/RIGHT FLOW DIRECTION AS REQUIRED. | JAY R. SMITH #210 SERIES. | JOSAM STD. 4" NO HUB, 2" VENT. |
| URS | URINAL SUPPORTS<br>ZURN Z-1222 WITH ADJUSTABLE PLATES. | JAY R. SMITH #0637. | JOSAM #17550. |
| EWH-1 | EXISTING ELECTRIC WATER HEATER<br>CRAFTMASTER E2F40, 40 GAL., 4500W/240V. PROVIDE NEW PIPING PER DETAIL/REVISED PLAN. | --- | --- |
| ET | EXPANSION TANK<br>AO SMITH 2 GALLON EXPANSION TANK PMC-2. | AMTROL ST-5-C. | STATE ETC-2X. |
| EWH-2 | ELECTRIC WATER HEATER #2 W/2 GAL. EXPANSION TANK<br>A.O. SMITH MODEL EJC-10, 10 GALLON, 1,650 WATT, 3/4" INLET AND OUTLET, 120 V. | RHEEM #81VP10S. | BRADFORD WHITE #M-1-10U6SS. |
| RPZ | 2" REDUCED PRESSURE BACKFLOW PREVENTER<br>WATTS MODEL #009QT-2" REDUCED PRESSURE BACKFLOW PREVENTER, CAST IRON CONSTRUCTION. | ZURN #375-2" | FEBCO #860-2" |
| FD | FLOOR DRAIN<br>ZURN ZN-415 WITH DEEP SEAL P-TRAP, 5" X 5" TYPE "S" SQUARE STRAINER AND 3" CONNECTION, VANDAL-PROOF TOP. PROVIDE MODEL WITH TRAP PRIMER CONNECTION ONLY FOR FLOOR DRAINS IN AREAS NOTED ON SHEET P300. | JOSAM #30000-S. | JAY R. SMITH #2005-B. |

* OR APPROVED EQUAL

## GENERAL NOTES – PLUMBING

1. PREPLAN ALL WORK PRIOR TO ORDERING, PURCHASING, OR FABRICATING ANY PART OF THE WORK DESCRIBED BY THIS DRAWING.
2. IMMEDIATELY NOTIFY THE ENGINEER OF ANY CONFLICTS WITH EXISTING FIELD CONDITIONS OR THE WORK OF OTHER TRADES.
3. RESOLVE ALL CONFLICTS PRIOR TO INCURRING ANY MATERIAL OR LABOR EXPENSES.
4. COMPLY WITH THE MANUFACTURER'S TECHNICAL INSTRUCTIONS WHEN INSTALLING PLUMBING FIXTURES, MATERIALS, AND DEVICES.
5. LOCATE FIXTURES AND EQUIPMENT GENERALLY AS SHOWN ON THE PLANS, HOWEVER, COORDINATE LOCATIONS WITH ACTUAL FIELD CONDITIONS TO PRESERVE ALL CODE-REQUIRED AND MANUFACTURER – REQUESTED SERVICE CLEARANCES.
6. COORDINATE ROUTING OF ALL PIPING WITH BUILDING STRUCTURE AND WITH THE WORK OF OTHER TRADES. OFFSET VENT PIPING AROUND BEAMS AND JOISTS AS NECESSARY.
7. ALL HANDICAP FIXTURES AND INSTALLATION OF HANDICAP FIXTURES SHALL CONFORM TO ADA REQUIREMENTS.
8. AT EXTERIOR WALL, INSTALL WATER PIPING ON HEATED SIDE OF WALL INSULATION.
9. PROVIDE WATER HAMMER ARRESTORS AT THE END OF EACH COLD AND HOT WATER BRANCH RISER. SIZE ARRESTOR APPROPRIATELY.
10. PROVIDE CONCRETE RING FOR ALL EXTERIOR CLEAN-OUTS.
11. REVIEW SITE PLAN FOR UTILITIES AND ORIENTATION PRIOR TO START OF WORK.
12. G.C. TO PROVIDE ROOF PENETRATIONS.
13. PROVIDE HTHW AT 120 DEGREES (F) AND LTHW AT 90 DEGREES (F).

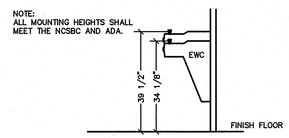


1 / P1 EWC DETAIL
SCALE: N.T.S.

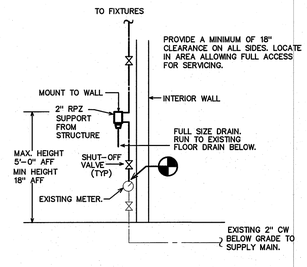


2 / P1 RPZ MOUNTING DETAIL
SCALE: N.T.S.

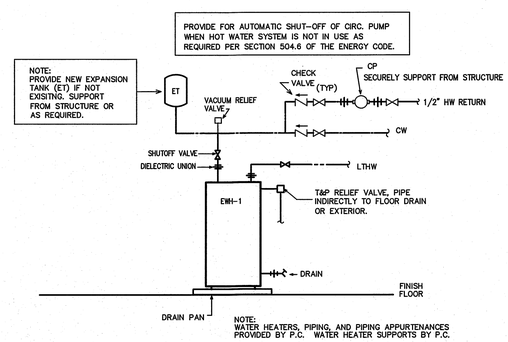


3 / P1 EWH-1 DETIAL
SCALE: N.T.S.

## SYMBOL LEGEND – PLUMBING

| SYMBOL | DESCRIPTION |
|---|---|
| | WASTE PIPING (W) |
| | VENT PIPING (V) |
| | COLD WATER PIPING (CW) |
| | HOT WATER PIPING (HW) |
| HWR | HOT WATER RETURN PIPING (HWR) |
| HTHW | HIGH TEMPERATURE HW PIPING (HTHW) 120 DEG. F |
| LTHW | LOW TEMPERATURE HW PIPING (LTHW) 90 DEG. F |
| COFF | CLEANOUT FINISH FLOOR |
| WCO/HCO | WALL/HORIZONTAL CLEANOUT |
| COFG | CLEANOUT FINISH GRADE |
| | DIELECTRIC UNION |
| | SHUT-OFF VALVE |
| | CHECK VALVE |
| | BALANCING VALVE |
| | CIRCULATION PUMP (CP) |
| | WATER METER (MTR) |
| | VENT THRU ROOF (VTR) |
| | POINT OF NEW CONNECTION TO EXISTING |

## LOAD SUMMARY – PLUMBING

| WASTE DEMAND (FU) | WATER DEMAND (FU) | WATER DEMAND (GPM) |
|---|---|---|
| 83.0 | 151.5 | 79.2 |

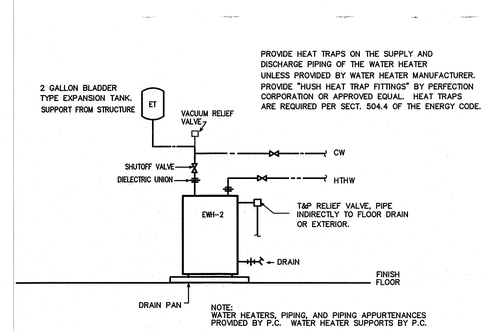


4 / P1 EWH-2 DETAIL
SCALE: N.T.S.

CONSTRUCTION DOCUMENTS

SEAL:


DESIGNED BY:
FACILITIES DESIGN
ARCHITECTS & ENGINEERS
FACILITIES MANAGEMENT DIVISION, NCDOT
1 SOUTH WILMINGTON STREET
RALEIGH, NORTH CAROLINA 27601
Phone: 919-707-4540 Fax: 919-715-0399

CONSULTANT:
ENGINEER
BURKE DESIGN GROUP, PA
PROFESSIONAL ENGINEERS
3305-109 Durham Drive
Raleigh, North Carolina 27603
919.771.1916 fax: 919.779.0826
email: benburke@nc.rr.com
Corp. License # C-2602


DRAWING TITLE / DESCRIPTION:
PLUMBING SPECIFICATIONS

PROJECT TITLE:
CAMDEN COUNTY REST AREA REFURBISHMENT
2356 HWY 117 NORTH, SOUTH MILLS NC 27976
CAMDEN COUNTY, NORTH CAROLINA

| | |
|---|---|
| SCO ID NO. | 14-11342-01A |
| TIP PROJ. NO. | – |
| WBS NO. | 36059.27 |
| FEDERAL ID NO. | – |

ASSET NUMBER:
CO.# SITE.# BLDG.#
15 - 04 - 02

REVISIONS

| NO. | DATE |
|---|---|
| | |
| | |
| | |

DATE ISSUED: 04-17-2015
DRAWN BY: DS
CHECKED BY: BEB

SHEET NO.
P1