KEY NOTES FOR SHEET DRAWING 1/P5

1. CONNECT TO EXISTING 4" DROP TO WASTE MAIN BELOW GRADE.
2. 4" DROP TO CONNECT TO EXISTING WASTE MAIN BELOW GRADE. VERIFY LOCATION.
3. CONNECT FD TO EXISTING DWV IN AREA OF REMOVED UNIT.
4. CONNECT TO EXISTING VENT MAIN/VTR IN AREA.

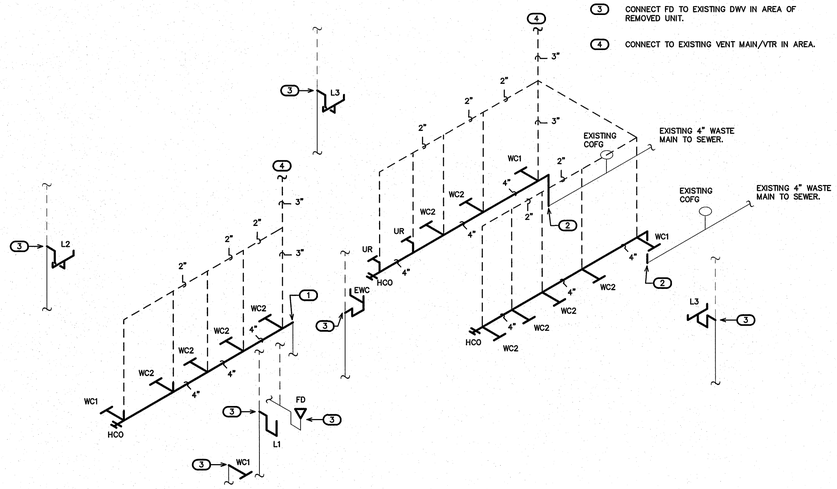


1/P5 DWV RISER
SCALE: N.T.S.

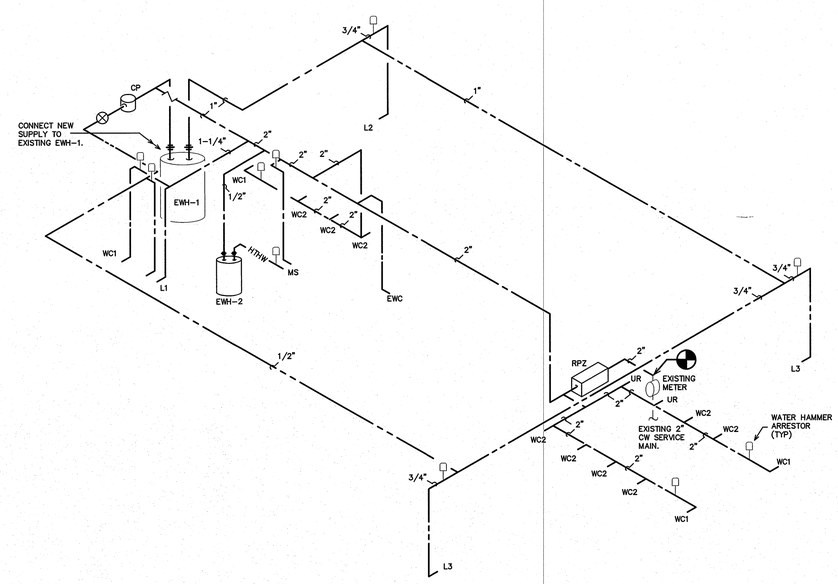


2/P5 SUPPLY RISER
SCALE: N.T.S.

| PIPE SIZING SCHEDULE | | | | |
|---|---|---|---|---|
| FIXTURE TYPE | DRAIN | VENT | CW | HW |
| (WC) FLUSH VALVE WATER CLOSET | 3" | 1 1/2" | 1" | – |
| (L) LAVATORY | 1 1/2" | 1 1/4" | – | 1/2" |
| (UR) URINAL | 2" | 1 1/2" | 3/4" | – |
| (EWC) ELECTRIC WATER COOLER | 1 1/4" | 1 1/4" | 1/2" | – |
| (MS) MOP SINK FAUCET/FD | 3" | 1 1/2" | 1/2" | 1/2" |

RISER NOTES:
REPRESENTATIVE SIZES ARE GIVEN FOR EACH TYPE OF FIXTURE.
SEE PIPE SIZING SCHEDULE.
MINIMUM 2" DRAIN LINE SIZE UNDER SLAB.
MAINTAIN PIPE SIZES SHOWN UNTIL LARGER SIZE IS REACHED.
PIPE SIZES ARE MINIMUMS FOR INDIVIDUAL FIXTURES U.O.N.

CONSTRUCTION DOCUMENTS

SEAL:
NORTH CAROLINA PROFESSIONAL SEAL 22038 PROFESSIONAL ENGINEER BENJAMIN E. BURLE
5/6/2015


DESIGNED BY:
FACILITIES DESIGN ARCHITECTS & ENGINEERS
FACILITIES MANAGEMENT DIVISION, NCDOT
1 SOUTH WILMINGTON STREET
RALEIGH, NORTH CAROLINA 27601
Phone: 919-707-4540 Fax: 919-715-0399

CONSULTANT:
ENGINEER
BURLE ENGINEERING GROUP, PA
CONSULTING ENGINEERS
3305-109 Durham Drive
Raleigh, North Carolina 27603
919.771.1916 fax: 919.779.0826
email: benburle@nc.rr.com
Corp. License # C-2862


DRAWING TITLE / DESCRIPTION:
RISERS

PROJECT TITLE:
CAMDEN COUNTY REST AREA REFURBISHMENT
2356 HWY 117 NORTH, SOUTH MILLS NC 27976
CAMDEN COUNTY, NORTH CAROLINA

| | |
|---|---|
| SCO ID NO. | 14-11342-01A |
| TIP PROJ. NO. | – |
| WBS NO. | 36059.27 |
| FEDERAL ID NO. | – |

ASSET NUMBER:
CO.# SITE.# BLDG.#
15 - 04 - 02

REVISIONS
NO. DATE

DATE ISSUED: 04-17-2015
DRAWN BY: DS
CHECKED BY: BEB

SHEET NO.
P5