WBS # 17BP.1.R.25

CONTRACT #:

EXIST BRIDGE NO. 450057
19'-0" CLEAR ROADWAY
SPANS: 4 @ 17'
TIMBER FLOOR ON TIMBER JOISTS
TIMBER CAPS/TIMBER PILES

TBM: TBM-1
RAILROAD SPIKE SET IN BASE OF 18" MAPLE WITH TWIN TRUNK
29.83' LT OF -L- STA 12+59.90
ELEV. 43.05

NAD 83

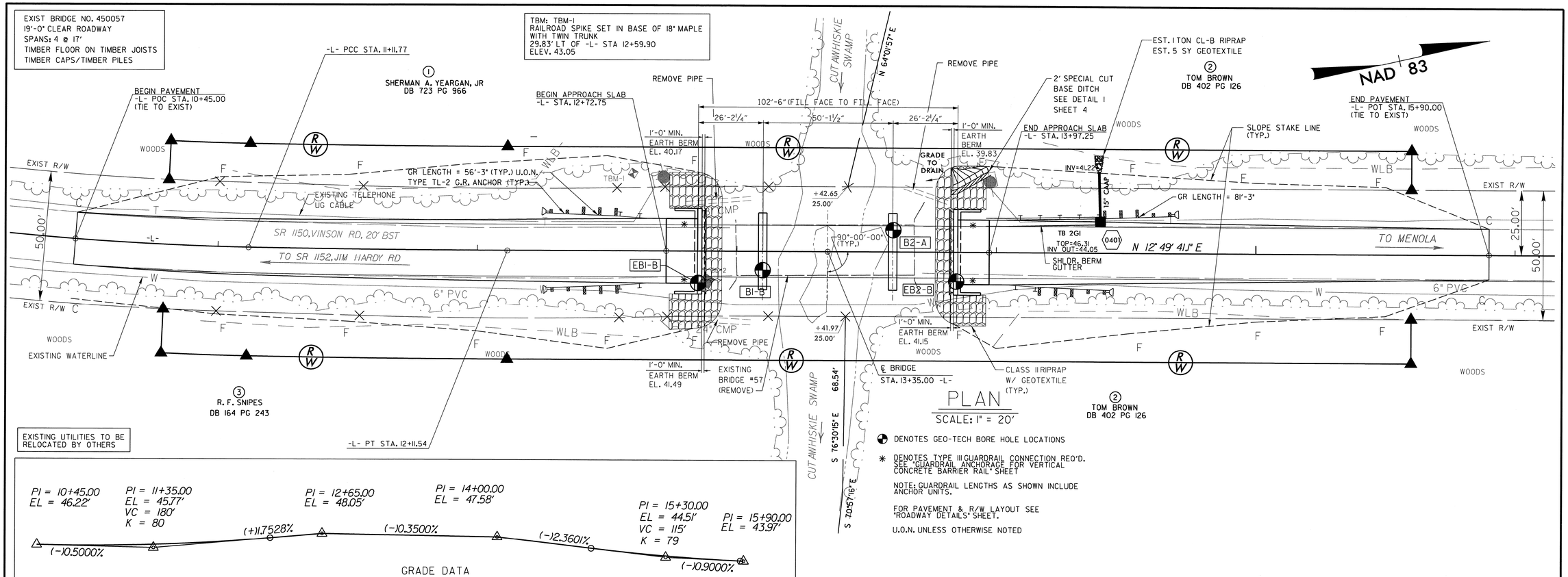

PLAN
SCALE: 1" = 20'

EXISTING UTILITIES TO BE RELOCATED BY OTHERS

DENOTES GEO-TECH BORE HOLE LOCATIONS

* DENOTES TYPE III GUARDRAIL CONNECTION REQ'D. SEE "GUARDRAIL ANCHORAGE FOR VERTICAL CONCRETE BARRIER RAIL" SHEET

NOTE: GUARDRAIL LENGTHS AS SHOWN INCLUDE ANCHOR UNITS.

FOR PAVEMENT & R/W LAYOUT SEE "ROADWAY DETAILS" SHEET.

U.O.N. UNLESS NOTED

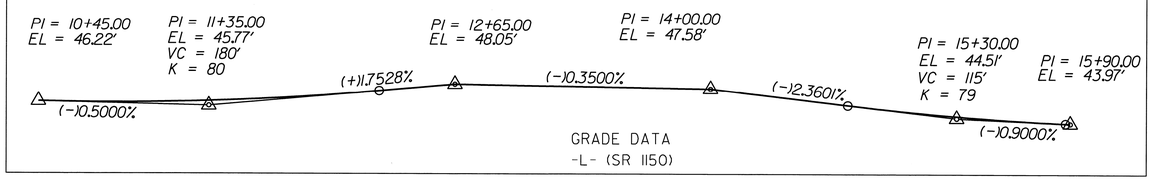

GRADE DATA
-L- (SR 1150)

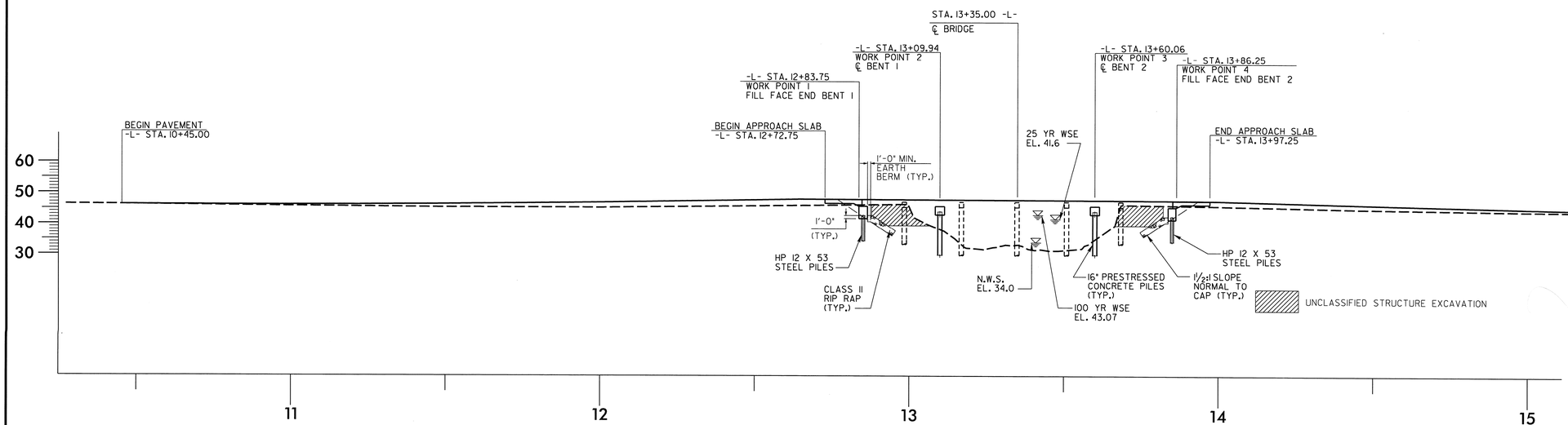

PROFILE ALONG ℄ SURVEY
SCALE: 1" = 20'

I HEREBY CERTIFY THESE PLANS ARE THE AS-BUILT PLANS

PROJECT: 17BP.1.R.25
HERTFORD COUNTY
STATION: 13+35.00 -L-
REPLACES BRIDGE NO. 450057

STATE OF NORTH CAROLINA
DEPARTMENT OF TRANSPORTATION
RALEIGH

BRIDGE ON SR 1150
OVER CUTAWHISKIE SWAMP
BETWEEN SR 1141 AND SR 1152

24'-10" CLEAR ROADWAY - 90° SKEW

NORTH CAROLINA PROFESSIONAL SEAL 037460 ENGINEER DENNIS K. HOYLE 2-7-13

Prepared by
URS
URS Corporation - North Carolina
1600 Perimeter Park Drive, Suite 400
Morrisville, NC 27560
PHONE: (919) 461-1100 FAX: (919) 461-1415
NC LIC. # C-2243

REVISIONS						SHEET NO.
NO.	BY:	DATE:	NO.	BY:	DATE:	1
1			1			TOTAL SHEETS
2			2			31

DRAWN BY: LHM DATE: 2/27/13
CHECKED BY: DCS DATE: 2/27/13

BENCHMARK: TBM-1: RAILROAD SPIKE IN BASE OF 18" MAPLE, 29.83' LT. -L- STA. 12+59.90 EL. 43.05

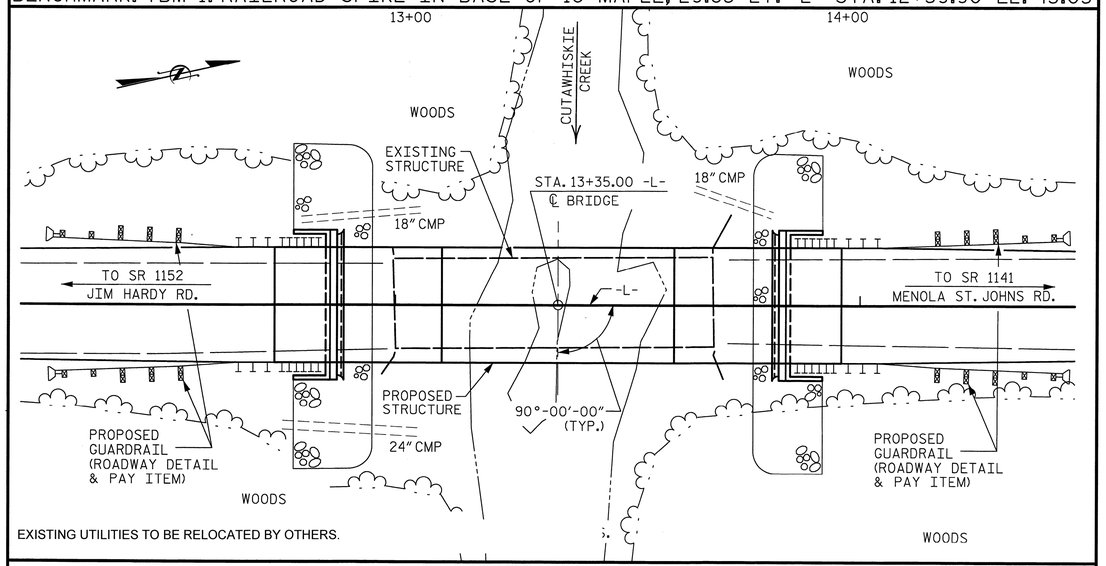

EXISTING UTILITIES TO BE RELOCATED BY OTHERS.

LOCATION SKETCH

HYDRAULIC DATA

DESIGN DISCHARGE_____= 1700 CFS.
FREQUENCY OF DESIGN FLOOD____= 25 YR.
DESIGN HIGH WATER ELEVATION__= 41.7 FT.
DRAINAGE AREA_____= 23.9 SQ. MI.
BASE DISCHARGE (Q100)_____= 2862 CFS.
BASE HIGH WATER ELEVATION____= 43.02 FT.

OVERTOPPING FLOOD DATA

OVERTOPPING DISCHARGE _____= 3000 CFS
FREQUENCY OF OVERTOPPING FLOOD __= > 100 YR.
OVERTOPPING FLOOD ELEVATION_____= 42.9 FT.

NOTES

ASSUMED LIVE LOAD = HL-93 OR ALTERNATE LOADING.

THIS BRIDGE HAS BEEN DESIGNED IN ACCORDANCE WITH THE REQUIREMENTS OF THE AASTHO LRFD BRIDGE DESIGN SPECIFICATIONS FOR SEISMIC PERFORMANCE ZONE 1.

REMOVAL OF THE EXISTING BRIDGE SHALL BE PERFORMED SO AS NOT TO ALLOW DEBRIS TO FALL INTO THE WATER. THE CONTRACTOR SHALL REMOVE THE BRIDGE AND SUBMIT PLANS FOR DEMOLITION IN ACCORDANCE WITH ARTICLE 402-2 OF THE STANDARD SPECIFICATIONS.

THE MATERIAL SHOWN IN THE CROSS-HATCHED AREA SHALL BE EXCAVATED FOR A DISTANCE OF 35 FT. EACH SIDE OF CENTERLINE ROADWAY AS DIRECTED BY THE ENGINEER. THIS WORK WILL BE PAID FOR AT THE CONTRACT LUMP SUM PRICE FOR UNCLASSIFIED STRUCTURE EXCAVATION. SEE SECTION 412 OF THE STANDARD SPECIFICATIONS.

THE SUBSTRUCTURE OF THE EXISTING BRIDGE INDICATED ON THE PLANS IS FROM THE BEST INFORMATION AVAILABLE. SINCE THIS INFORMATION IS SHOWN FOR THE CONVENIENCE OF THE CONTRACTOR, THE CONTRACTOR SHALL HAVE NO CLAIM WHATSOEVER AGAINST THE DEPARTMENT OF TRANSPORTATION FOR ANY DELAYS OR ADDITIONAL COST INCURRED BASED ON DIFFERENCES BETWEEN THE EXISTING BRIDGE SUBSTRUCTURE SHOWN ON THE PLANS AND THE ACTUAL CONDITIONS AT THE PROJECT SITE.

AFTER SERVING AS A TEMPORARY STRUCTURE THE EXISTING STRUCTURE CONSISTING OF 4 @ 17'-0" TIMBER DECK ON TIMBER JOISTS WITH A CLEAR ROADWAY WIDTH OF 19'-0" SUPPORTED BY TIMBER CAP AND PILE END BENTS AND BENTS AND LOCATED AT THE PROPOSED STRUCTURE SHALL BE REMOVED. THE EXISTING BRIDGE IS PRESENTLY POSTED FOR LOAD LIMIT. SHOULD THE STRUCTURAL INTEGRITY OF THE BRIDGE DETERIORATE DURING CONSTRUCTION OF THE PROPOSED BRIDGE, THE LOAD LIMIT MAY BE REDUCED AS FOUND NECESSARY DURING THE LIFE OF THE PROJECT.

FOR GROUT FOR STRUCTURES, SEE SPECIAL PROVISIONS.

FOR CRANE SAFETY, SEE SPECIAL PROVISIONS.

FOR FALSEWORK AND FORMWORK, SEE SPECIAL PROVISIONS.

FOR OTHER DESIGN DATA AND GENERAL NOTES, SEE SHEET SN.

FOR SUBMITTAL OF WORKING DRAWINGS, SEE SPECIAL PROVISIONS.

FOR EROSION CONTROL MEASURES SEE EROSION CONTROL PLANS.

THIS STRUCTURE HAS BEEN DESIGNED IN ACCORDANCE WITH HEC 18, "EVALUATING SCOUR AT BRIDGES", MAY, 2001.

FOUNDATION NOTES

PILES AT END BENTS 1 AND 2 ARE DESIGNED FOR A FACTORED RESISTANCE OF 55 TONS PER PILE.

PILES AT BENTS 1 AND 2 ARE DESIGNED FOR A FACTORED RESISTANCE OF 90 TONS PER PILE.

DRIVE PILES AT END BENTS 1 AND 2 TO A REQUIRED DRIVING RESISTANCE OF 95 TONS PER PILE.

DRIVE PILES AT BENTS 1 AND 2 TO A REQUIRED DRIVING RESISTANCE OF 185 TONS PER PILE. THIS REQUIRED DRIVING RESISTANCE INCLUDES ADDITIONAL RESISTANCE INCLUDES ADDITIONAL RESISTANCE FOR DOWNDRAG OR SCOUR.

INSTALL PILES AT BENT 1 AND 2 TO A TIP ELEVATION NO HIGHER THAN 0 FT.

THE SCOUR CRITICAL ELEVATION FOR BENTS 1 AND 2 IS ELEVATION 25 FT. SCOUR CRITICAL ELEVATIONS ARE USED TO MONITOR POSSIBLE SCOUR PROBELMS DURING THE LIFE OF THE STRUCTURE.

IT HAS BEEN ESTIMATED THAT A HAMMER WITH AN EQUIVALENT RATED ENERGY IN THE RANGE OF 20 TO 25 FT-KIPS PER BLOW WILL BE REQUIRED TO DRIVE PILES AT END BENTS 1 AND 2. THE ESTIMATED ENERGY RANGE DOES NOT RELEASE THE CONTRACTOR FROM PROVIDING DRIVING EQUIPMENT IN ACCORDANCE WITH SUB ARTICLE 450-3(D)(2) OF THE STANDARD SPECIFICATIONS.

IT HAS BEEN ESTIMATED THAT A HAMMER WITH AN EQUIVALENT RATED ENERGY IN THE RANGE OF 40 TO 60 FT-KIPS PER BLOW WILL BE REQUIRED TO DRIVE PILES AT BENTS 1 AND 2. THE ESTIMATED ENERGY RANGE DOES NOT RELEASE THE CONTRACTOR FROM PROVIDING DRIVING EQUIPMENT IN ACCORDANCE WITH SUB ARTICLE 450-3(D)(2) OF THE STANDARD SPECIFICATIONS.

TESTING PILES WITH THE PDA DURING DRIVING, RESTRIKING OR REDRIVING MAY BE REQUIRED. THE ENGINEER WILL DETERMINE THE NEED FOR PDA TESTING. FOR PDA TESTING, SEE SECTION 450 OF THE STANDARD SPECIFICATIONS (AND FOR PILE DRIVING CRITERIA, SEE PILE DRIVING CRITERIA PROVISION).

FOR PILES, SEE SECTION 450 OF THE STANDARD SPECIFICATIONS.

TOTAL BILL OF MATERIAL

	REMOVAL OF EXISTING STRUCTURE AT STA. 13+35.00 -L-	UNCLASSIFIED STRUCTURE EXCAVATION	BRIDGE APPROACH SLABS	HP 12 X 53 STEEL PILES		16" PRESTRESSED CONCRETE PILES		RIP RAP CLASS II (2'-0" THICK)	GEOTEXTILE FOR DRAINAGE	CONSTRUCTION OF SUBSTRUCTURE	CONSTRUCTION OF SUPERSTRUCTURE
	LUMP SUM	LUMP SUM	LUMP SUM	NO.	LIN. FT.	NO.	LIN. FT.	TONS	SQ. YARDS	LUMP SUM	LUMP SUM
SUPERSTRUCTURE											
END BENT 1				5	325			96	107		
BENT 1						6	390				
BENT 2						6	420				
END BENT 2				5	350			96	106		
TOTAL	LUMP SUM	LUMP SUM	LUMP SUM	10	675	12	810	192	213	LUMP SUM	LUMP SUM

PROJECT NO. 17BP.1.R.25
HERTFORD COUNTY
STATION: 13+35.00 -L-

SHEET 2 OF 2 REPLACES BRIDGE NO. 57

Prepared by
URS
URS Corporation - North Carolina
1600 Perimeter Park Drive, Suite 400
Morrisville, NC 27560
PHONE: 919 461-1100 FAX: 919 461-1415
NC LIC. # C-2243

NORTH CAROLINA PROFESSIONAL SEAL 5953 ENGINEER J. CARLDON HALL, JR.
3/7/13

STATE OF NORTH CAROLINA
DEPARTMENT OF TRANSPORTATION
RALEIGH

GENERAL DRAWING FOR BRIDGE ON SR 1150 OVER CUTAWHISKIE CREEK

BETWEEN SR 1152 & SR 1141

REVISIONS						SHEET NO.
NO.	BY:	DATE:	NO.	BY:	DATE:	2
1			3			TOTAL SHEETS
2			4			31

DRAWN BY : K.H. COMPTON DATE : 2/14/13
CHECKED BY : R.L. WHITCHER DATE : 2/29/13

3/6/2013
P:\Jobs\Group A Bridge Replacements\Hertford Bridge 057\Structures\FInalDrawings\450057_SD_PGD2.dgn
Kyle_compton

LOAD AND RESISTANCE FACTOR RATING (LRFD) SUMMARY FOR PRESTRESSED CONCRETE GIRDERS

LEVEL		VEHICLE	WEIGHT (W) (TONS)	CONTROLLING LOAD RATING	MINIMUM RATING FACTORS (RF)	TONS = W X RF	STRENGTH I LIMIT STATE											SERVICE III LIMIT STATE							COMMENT NUMBER
								MOMENT					SHEAR						MOMENT							
							LIVELOAD FACTORS	DISTRIBUTION FACTORS (DF)	RATING FACTOR	SPAN	GIRDER LOCATION	DISTANCE FROM LEFT END OF SPAN (ft)	DISTRIBUTION FACTORS (DF)	RATING FACTOR	SPAN	GIRDER LOCATION	DISTANCE FROM LEFT END OF SPAN (ft)	LIVELOAD FACTORS	DISTRIBUTION FACTORS (DF)	RATING FACTOR	SPAN	GIRDER LOCATION	DISTANCE FROM LEFT END OF SPAN (ft)	
DESIGN LOAD RATING		HL-93(Inv)	N/A	1	1.018	--	1.75	0.284	2.53	25'	EL	12	0.591	**1.02**	25'	EL	**1.2**	0.80	0.284	2.34	25'	EL	12	
		HL-93(Opr)	N/A	--	1.319	--	1.35	0.284	3.29	25'	EL	12	0.591	1.32	25'	EL	1.2	N/A	--	--	--	--	--	
		HS-20(Inv)	36.000	2	1.178	42.397	1.75	0.284	3.76	25'	EL	12	0.591	**1.18**	25'	EL	**1.2**	0.80	0.284	3.46	25'	EL	12	
		HS-20(Opr)	36.000	--	1.527	54.959	1.35	0.284	4.87	25'	EL	12	0.591	1.53	25'	EL	1.2	N/A	--	--	--	--	--	
LEGAL LOAD RATING	SV	SNSH	13.500	--	2.728	36.833	1.40	0.284	6.83	25'	EL	12	0.591	2.73	25'	EL	1.2	0.80	0.284	5.04	25'	EL	12	
		SNGARBS2	20.000	--	2.186	43.718	1.40	0.284	6.39	25'	EL	12	0.591	2.19	25'	EL	1.2	0.80	0.284	4.72	25'	EL	12	
		SNAGRIS2	22.000	--	2.141	47.107	1.40	0.284	6.83	25'	EL	12	0.591	2.14	25'	EL	1.2	0.80	0.284	5.04	25'	EL	12	
		SNCOTTS3	27.250	--	1.385	37.731	1.40	0.284	3.57	25'	EL	12	0.591	1.38	25'	EL	1.2	0.80	0.284	2.64	25'	EL	12	
		SNAGGRS4	34.925	--	1.332	46.511	1.40	0.284	3.56	25'	EL	12	0.591	1.33	25'	EL	1.2	0.80	0.284	2.62	25'	EL	12	
		SNS5A	35.550	--	1.392	49.477	1.40	0.284	3.45	25'	EL	12	0.591	1.39	25'	EL	1.2	0.80	0.284	2.54	25'	EL	12	
		SNS6A	39.950	--	1.334	53.310	1.40	0.284	3.23	25'	EL	12	0.591	1.33	25'	EL	1.2	0.80	0.284	2.39	25'	EL	12	
		SNS7B	42.000	--	1.344	56.455	1.40	0.284	3.23	25'	EL	12	0.591	1.34	25'	EL	1.2	0.80	0.284	2.37	25'	EL	12	
	TTST	TNAGRIT3	33.000	--	1.634	53.934	1.40	0.284	4.55	25'	EL	12	0.591	1.63	25'	EL	1.2	0.80	0.284	3.36	25'	EL	12	
		TNT4A	33.075	--	1.483	49.049	1.40	0.284	3.95	25'	EL	12	0.591	1.48	25'	EL	1.2	0.80	0.284	2.92	25'	EL	12	
		TNT6A	41.600	--	1.398	58.138	1.40	0.284	3.71	25'	EL	12	0.591	1.40	25'	EL	1.2	0.80	0.284	2.74	25'	EL	12	
		TNT7A	42.000	--	1.391	58.419	1.40	0.284	3.84	25'	EL	12	0.591	1.39	25'	EL	1.2	0.80	0.284	2.83	25'	EL	12	
		TNT7B	42.000	--	1.343	56.385	1.40	0.284	3.46	25'	EL	12	0.591	1.34	25'	EL	1.2	0.80	0.284	2.55	25'	EL	12	
		TNAGRIT4	43.000	--	1.340	57.604	1.40	0.284	3.71	25'	EL	12	0.591	1.34	25'	EL	1.2	0.80	0.284	2.73	25'	EL	12	
		TNAGT5A	45.000	--	1.367	61.501	1.40	0.284	3.71	25'	EL	12	0.591	1.37	25'	EL	1.2	0.80	0.284	2.73	25'	EL	12	
		TNAGT5B	45.000	3	1.239	55.766	1.40	0.284	3.65	25'	EL	9.6	0.591	**1.24**	25'	EL	**1.2**	0.80	0.284	2.71	25'	EL	9.6	

LOAD FACTORS:

DESIGN LOAD RATING FACTORS	LIMIT STATE	γ_{DC}	γ_{DW}
	STRENGTH I	1.25	1.50
	SERVICE III	1.00	1.00

NOTES:

MINIMUM RATING FACTORS ARE BASED ON THE STRENGTH I AND SERVICE III LIMIT STATES.

ALLOWABLE STRESSES FOR SERVICE III LIMIT STATE ARE AS REQUIRED FOR DESIGN.

COMMENTS:

1.
2.
3.
4.

(#) CONTROLLING LOAD RATING

(1) DESIGN LOAD RATING (HL-93)

(2) DESIGN LOAD RATING (HS-20)

(3) LEGAL LOAD RATING **

** SEE CHART FOR VEHICLE TYPE

GIRDER LOCATION

I - INTERIOR GIRDER
EL - EXTERIOR LEFT GIRDER
ER - EXTERIOR RIGHT GIRDER

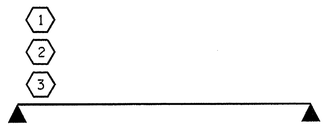

LRFR SUMMARY

FOR SPAN 'A' & 'C'

PROJECT NO. 17BP.1.R.25

HERTFORD COUNTY

STATION: 13+35.00 -L-

STATE OF NORTH CAROLINA
DEPARTMENT OF TRANSPORTATION
RALEIGH

STANDARD

LRFR SUMMARY FOR 25' CORED SLAB UNIT 90° SKEW

(NON-INTERSTATE TRAFFIC)

NORTH CAROLINA PROFESSIONAL SEAL 14045 ENGINEER TIMOTHY A. COGGINS
02/08/13

REVISIONS						SHEET NO.
NO.	BY:	DATE:	NO.	BY:	DATE:	3
1			3			TOTAL SHEETS
2			4			31

ASSEMBLED BY : REZA KOUCHEKI DATE : 01-31-13
CHECKED BY : A.M.LEE, PE DATE : 02-05-13

DRAWN BY : CVC 6/10
CHECKED BY : DNS 6/10

08-FEB-2013 12:25
S:\DPG\TIm\Division 1 LIBR\17BP.1.R.25\Final Plans\17BP1R25_SD_CS.dgn
tcoggins

STD. NO. 21LRFR1_90S_25L

LOAD AND RESISTANCE FACTOR RATING (LRFD) SUMMARY FOR PRESTRESSED CONCRETE GIRDERS

LEVEL		VEHICLE	WEIGHT (W) (TONS)	CONTROLLING LOAD RATING	MINIMUM RATING FACTORS (RF)	TONS = W X RF	STRENGTH I LIMIT STATE											SERVICE III LIMIT STATE						COMMENT NUMBER
								MOMENT					SHEAR						MOMENT						
							LIVELOAD FACTORS	DISTRIBUTION FACTORS (DF)	RATING FACTOR	SPAN	GIRDER LOCATION	DISTANCE FROM LEFT END OF SPAN (ft)	DISTRIBUTION FACTORS (DF)	RATING FACTOR	SPAN	GIRDER LOCATION	DISTANCE FROM LEFT END OF SPAN (ft)	LIVELOAD FACTORS	DISTRIBUTION FACTORS (DF)	RATING FACTOR	SPAN	GIRDER LOCATION	DISTANCE FROM LEFT END OF SPAN (ft)	
DESIGN LOAD RATING		HL-93(Inv)	N/A	(1)	1.394	--	1.75	0.276	1.57	50'	EL	24.5	0.531	**1.39**	50'	EL	**2.45**	0.80	0.276	1.44	50'	EL	24.5	
		HL-93(Opr)	N/A	--	1.807	--	1.35	0.276	2.03	50'	EL	24.5	0.531	1.81	50'	EL	2.45	N/A	--	--	--	--	--	
		HS-20(Inv)	36.000	(2)	1.667	60.007	1.75	0.276	1.95	50'	EL	24.5	0.531	**1.67**	50'	EL	**2.45**	0.80	0.276	1.79	50'	EL	24.5	
		HS-20(Opr)	36.000	--	2.161	77.787	1.35	0.276	2.52	50'	EL	24.5	0.531	2.16	50'	EL	2.45	N/A	--	--	--	--	--	
LEGAL LOAD RATING	SV	SNSH	13.500	--	3.635	49.079	1.40	0.276	4.95	50'	EL	24.5	0.531	4.70	50'	EL	2.45	0.80	0.276	3.64	50'	EL	24.5	
		SNGARBS2	20.000	--	2.871	57.42	1.40	0.276	3.91	50'	EL	24.5	0.531	3.42	50'	EL	2.45	0.80	0.276	2.87	50'	EL	24.5	
		SNAGRIS2	22.000	--	2.778	61.109	1.40	0.276	3.78	50'	EL	19.6	0.531	3.21	50'	EL	2.45	0.80	0.276	2.78	50'	EL	24.5	
		SNCOTTS3	27.250	--	1.814	49.418	1.40	0.276	2.47	50'	EL	24.5	0.531	2.36	50'	EL	2.45	0.80	0.276	1.81	50'	EL	24.5	
		SNAGGRS4	34.925	--	1.577	55.063	1.40	0.276	2.15	50'	EL	24.5	0.531	2.01	50'	EL	2.45	0.80	0.276	1.58	50'	EL	24.5	
		SNS5A	35.550	--	1.537	54.657	1.40	0.276	2.09	50'	EL	24.5	0.531	2.07	50'	EL	2.45	0.80	0.276	1.54	50'	EL	24.5	
		SNS6A	39.950	--	1.438	57.43	1.40	0.276	1.96	50'	EL	24.5	0.531	1.91	50'	EL	2.45	0.80	0.276	1.44	50'	EL	24.5	
		SNS7B	42.000	--	1.370	57.54	1.40	0.276	1.87	50'	EL	24.5	0.531	1.91	50'	EL	2.45	0.80	0.276	1.37	50'	EL	24.5	
	TTST	TNAGRIT3	33.000	--	1.761	58.118	1.40	0.276	2.40	50'	EL	24.5	0.531	2.25	50'	EL	2.45	0.80	0.276	1.76	50'	EL	24.5	
		TNT4A	33.075	--	1.777	58.759	1.40	0.276	2.42	50'	EL	24.5	0.531	2.17	50'	EL	2.45	0.80	0.276	1.78	50'	EL	24.5	
		TNT6A	41.600	--	1.480	61.558	1.40	0.276	2.01	50'	EL	24.5	0.531	2.08	50'	EL	2.45	0.80	0.276	1.48	50'	EL	24.5	
		TNT7A	42.000	--	1.502	63.087	1.40	0.276	2.05	50'	EL	24.5	0.531	1.94	50'	EL	2.45	0.80	0.276	1.50	50'	EL	24.5	
		TNT7B	42.000	--	1.566	65.773	1.40	0.276	2.13	50'	EL	24.5	0.531	1.84	50'	EL	2.45	0.80	0.276	1.57	50'	EL	24.5	
		TNAGRIT4	43.000	--	1.486	63.902	1.40	0.276	2.02	50'	EL	24.5	0.531	1.77	50'	EL	2.45	0.80	0.276	1.49	50'	EL	24.5	
		TNAGT5A	45.000	--	1.388	62.47	1.40	0.276	1.89	50'	EL	24.5	0.531	1.80	50'	EL	2.45	0.80	0.276	1.39	50'	EL	24.5	
		TNAGT5B	45.000	(3)	1.360	61.206	1.40	0.276	1.85	50'	EL	24.5	0.531	1.68	50'	EL	2.45	0.80	0.276	**1.36**	50'	EL	**24.5**	

LOAD FACTORS:

DESIGN LOAD RATING FACTORS	LIMIT STATE	γ_{DC}	γ_{DW}
	STRENGTH I	1.25	1.50
	SERVICE III	1.00	1.00

NOTES:

MINIMUM RATING FACTORS ARE BASED ON THE STRENGTH I AND SERVICE III LIMIT STATES.

ALLOWABLE STRESSES FOR SERVICE III LIMIT STATE ARE AS REQUIRED FOR DESIGN.

COMMENTS:

1.
2.
3.
4.

(#) CONTROLLING LOAD RATING

(1) DESIGN LOAD RATING (HL-93)

(2) DESIGN LOAD RATING (HS-20)

(3) LEGAL LOAD RATING **

** SEE CHART FOR VEHICLE TYPE

GIRDER LOCATION

I - INTERIOR GIRDER
EL - EXTERIOR LEFT GIRDER
ER - EXTERIOR RIGHT GIRDER

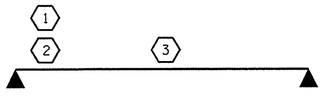

LRFR SUMMARY
FOR SPAN 'B'

PROJECT NO. 17BP.1.R.25
HERTFORD COUNTY
STATION: 13+35.00 -L-

STATE OF NORTH CAROLINA
DEPARTMENT OF TRANSPORTATION
RALEIGH
STANDARD
LRFR SUMMARY FOR 50' CORED SLAB UNIT 90° SKEW
(NON-INTERSTATE TRAFFIC)

NORTH CAROLINA PROFESSIONAL SEAL 14045 ENGINEER TIMOTHY A. COGGINS
01/08/13

REVISIONS						SHEET NO.
NO.	BY:	DATE:	NO.	BY:	DATE:	4
1			3			TOTAL SHEETS
2			4			31

ASSEMBLED BY : REZA KOUCHEKI DATE : 01-31-13
CHECKED BY : A.M.LEE, PE DATE : 02-05-13
DRAWN BY : CVC 6/10
CHECKED BY : DNS 6/10

08-FEB-2013 12:24
S:\DPG\Tim\Division 1 LIBR\17BP.1.R.25\Final Plans\17BP1R25_SD_CS.dgn
tcoggins

STD. NO. 21LRFR1_90S_50L

WBS # 17BP.1.R.25

CONTRACT #:

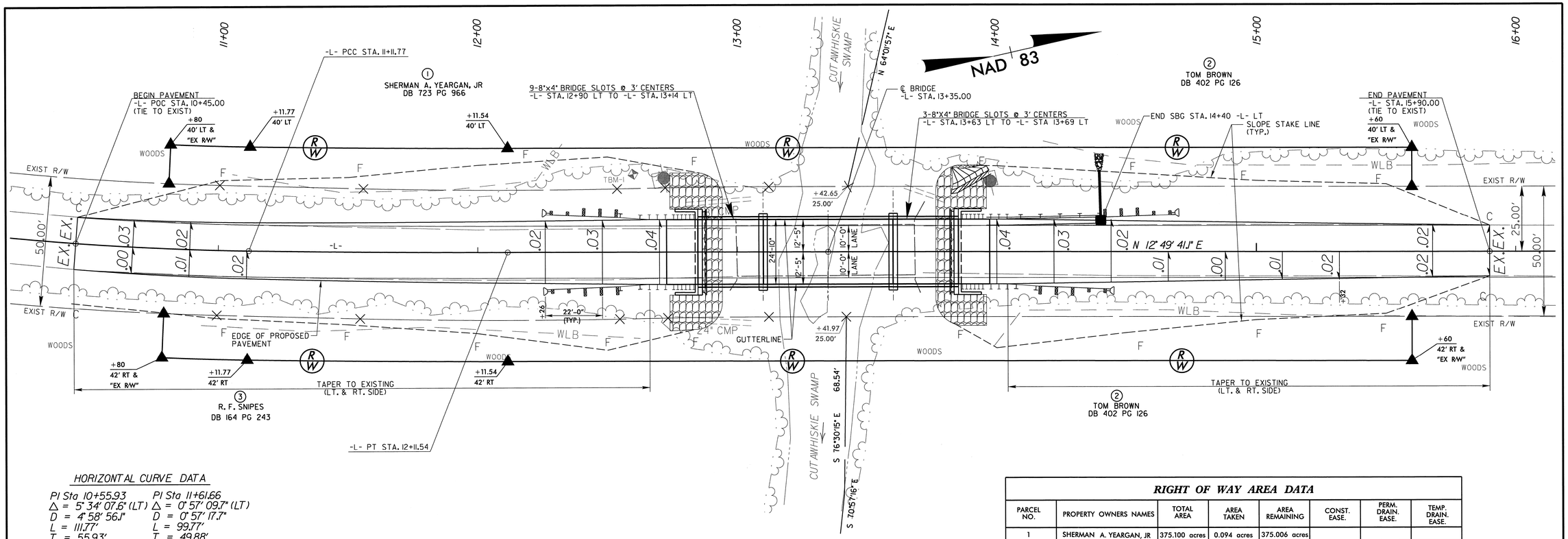

HORIZONTAL CURVE DATA

PI Sta 10+55.93	PI Sta 11+61.66
△ = 5° 34' 07.6" (LT)	△ = 0° 57' 09.7" (LT)
D = 4° 58' 56.1"	D = 0° 57' 17.7"
L = 111.77'	L = 99.77'
T = 55.93'	T = 49.88'
R = 1,150.00'	R = 6,000.00'

PAVEMENT LAYOUT DETAIL

SCALE: 1" = 20'

RIGHT OF WAY AREA DATA

PARCEL NO.	PROPERTY OWNERS NAMES	TOTAL AREA	AREA TAKEN	AREA REMAINING	CONST. EASE.	PERM. DRAIN. EASE.	TEMP. DRAIN. EASE.
1	SHERMAN A. YEARGAN, JR	375.100 acres	0.094 acres	375.006 acres			
2	TOM BROWN	137.710 acres	0.159 acres	137.551 acres			
3	R. F. SNIPES	31.970 acres	0.100 acres	31.870 acres			

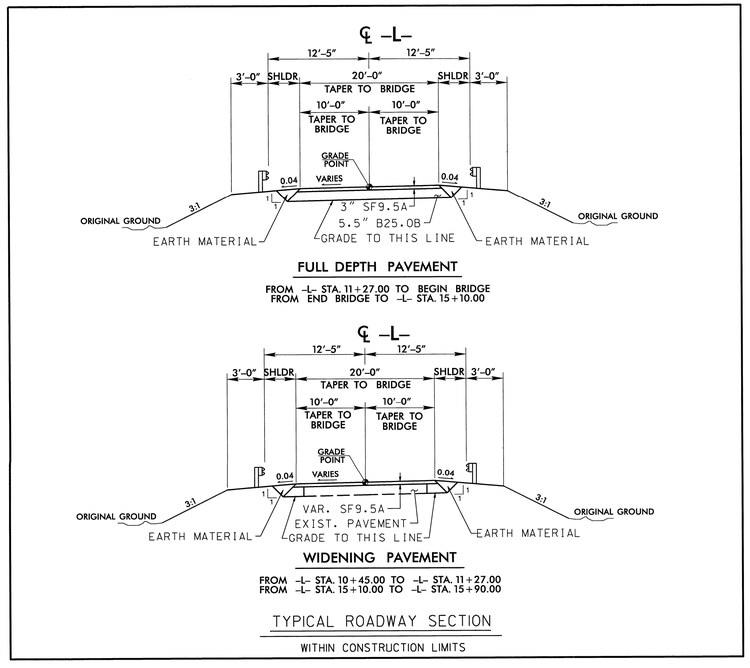

FULL DEPTH PAVEMENT

FROM -L- STA. 11+27.00 TO BEGIN BRIDGE
FROM END BRIDGE TO -L- STA. 15+10.00

WIDENING PAVEMENT

FROM -L- STA. 10+45.00 TO -L- STA. 11+27.00
FROM -L- STA. 15+10.00 TO -L- STA. 15+90.00

TYPICAL ROADWAY SECTION

WITHIN CONSTRUCTION LIMITS

DETAIL 1

SPECIAL CUT BASE DITCH

(Not to Scale)

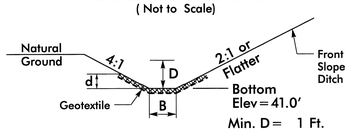

Min. D = 1 Ft.
Max. d = 1 Ft.
B = 2 Ft.

Type of Liner = Class II Rip-Rap

FROM STA. 13+81 TO STA. 14+00

DATUM DESCRIPTION

THE LOCALIZED COORDINATE SYSTEM DEVELOPED FOR THIS PROJECT IS BASED ON THE STATE PLANE COORDINATES ESTABLISHED BY JOYNER KEENY FOR MONUMENT "BL-2" WITH NAD 83/CORS 96 STATE PLANE GRID COORDINATES OF NORTHING: 943605.79(ft) EASTING: 2550246.29(ft) ELEVATION: 45.81(ft)

THE AVERAGE COMBINED GRID FACTOR USED ON THIS PROJECT (GROUND TO GRID) IS: 1.000052431

ALL LINEAR DIMENSIONS ARE LOCALIZED HORIZONTAL DISTANCES
VERTICAL DATUM USED IS NAVD 88

Prepared by
URS
URS Corporation - North Carolina
1600 Perimeter Park Drive, Suite 400
Morrisville, NC 27560
PHONE (919)461-1100 FAX (919)461-1415
NC LIC.# C-2243

DRAWN BY: LHM DATE: 2/27/13
CHECKED BY: DCS DATE: 2/27/13

PROJECT: 17BP.1.R.25

HERTFORD COUNTY

STATION: 13+35.00 -L-

REPLACES BRIDGE NO. 450057

STATE OF NORTH CAROLINA
DEPARTMENT OF TRANSPORTATION
RALEIGH

ROADWAY DETAILS

24'-10" CLEAR ROADWAY - 90° SKEW

REVISIONS						SHEET NO.
NO.	BY:	DATE:	NO.	BY:	DATE:	5
1			1			TOTAL SHEETS
2			2			31

NORTH CAROLINA PROFESSIONAL ENGINEER SEAL 30781 DENNIS K. HOYLE 3-7-13

WBS # 17BP.1.R.25

CONTRACT #:

TRAFFIC MANAGEMENT FOR TEMPORARY ROAD CLOSURE

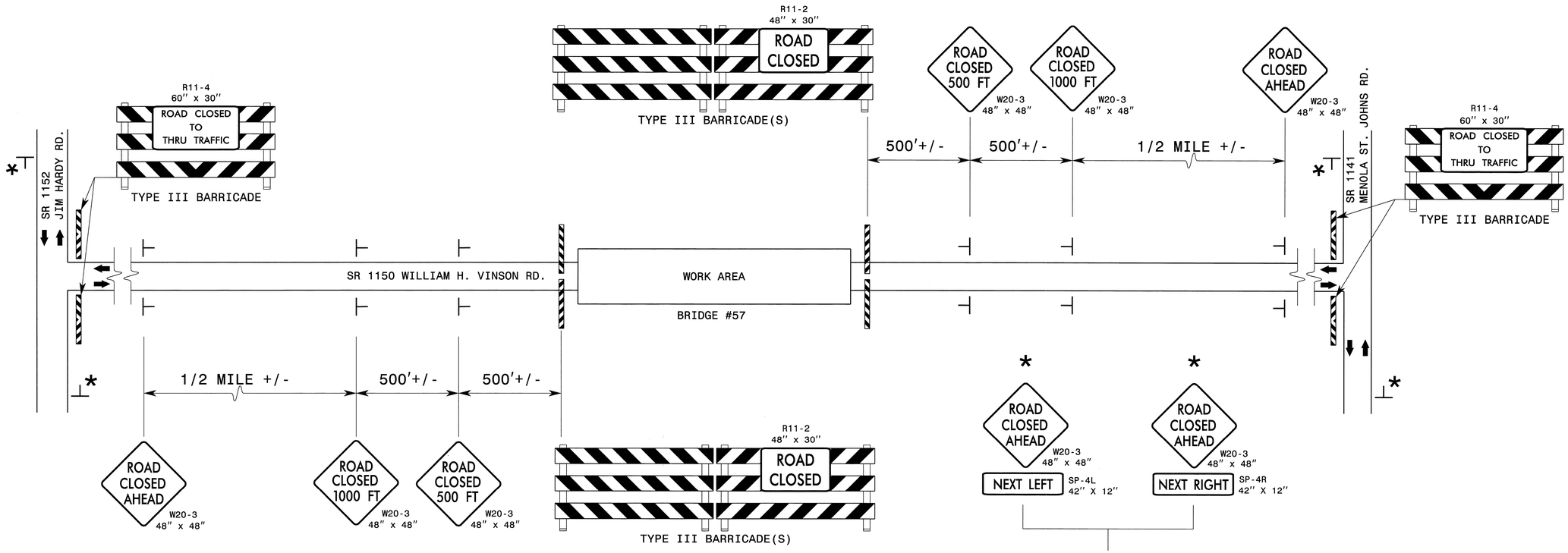

LEGEND

- DIRECTION OF TRAFFIC FLOW
- STATIONARY SIGN
- BARRICADE (TYPE III)

ROADWAY STANDARD DRAWINGS

THE FOLLOWING ROADWAY STANDARDS AS SHOWN IN "ROADWAY STANDARD DRAWINGS" - PROJECT SERVICES UNIT - N.C. DEPARTMENT OF TRANSPORTATION - RALEIGH N.C., ARE CONSIDERED A PART OF THE PLANS:

STD. NO.	TITLE
1101.03	TEMPORARY ROAD CLOSURES
1101.04	TEMPORARY SHOULDER CLOSURES
1110.01	STATIONARY WORK ZONE SIGNS
1110.02	PORTABLE WORK ZONE SIGNS
1135.01	CONES
1145.01	BARRICADES
904.10	ORIENTATION OF GROUND MOUNTED SIGNS

GENERAL NOTES

1 - INSTALLATION OF TEMPORARY ROUTE MARKERS, DESTINATION SIGNS AND ANY NECESSARY MODIFICATIONS TO EXISTING OR PROPOSED REGULATORY OR WARNING SIGNS WILL BE MADE BY OTHERS (STATE OR CITY FORCES) UNLESS OTHERWISE DESIGNATED IN PLANS. PROVIDE A MINIMUM 21 CALENDAR DAY NOTICE TO STATE FORCES BEFORE A ROADWAY IS CLOSED TO TRAFFIC SUCH THAT NECESSARY PROVISIONS CAN BE MADE TO INFORM LOCAL EMERGENCY AND LAW ENFORCEMENT PERSONNEL, SCHOOLS OR ANY OTHER PARTIES AFFECTED BY THE ROAD CLOSURE.

2 - INSTALL SIGNS BEFORE THE BARRICADES WHEN CLOSING THE ROADWAY TO TRAFFIC. REMOVE BARRICADES BEFORE SIGNS WHEN OPENING THE ROADWAY TO TRAFFIC. INSTALL/REMOVE SIGNS AND BARRICADES WITHIN THE SAME CALENDAR DAY.

3 - POSITION WING BARRICADES ON THE SHOULDERS AND SLOPE THE STRIPES DOWNWARD IN THE DIRECTION TOWARD WHICH TRAFFIC MUST TURN IN DETOURING.

4 - USE ADDITIONAL TYPE III BARRICADES IN STAGGERED LOCATIONS SUPPLEMENTED WITH SIGN R11-4 "ROAD CLOSED TO THRU TRAFFIC" IN THE EVENT THAT TRAFFIC MUST BE MAINTAINED BEYOND THE DETOUR POINT.

5 - SEE STANDARD SPECIFICATION 1089-1 FOR WORK ZONE SIGNS.

6 - SEE STANDARD SPECIFICATION 1089-2 FOR WORK ZONE SIGN SUPPORTS.

Prepared by
URS
URS Corporation - North Carolina
1600 Perimeter Park Drive, Suite 400
Morrisville, NC 27560
PHONE: 919 461-1100 FAX: 919 461-1415
NC LIC.: C-2243

PROJECT: 17BP.1.R.25

HERTFORD COUNTY

STATION: 13+35.00 -L-

REPLACES BRIDGE NO. 450057

STATE OF NORTH CAROLINA
DEPARTMENT OF TRANSPORTATION
RALEIGH

TRAFFIC MANAGEMENT PLAN

24'-10" CLEAR ROADWAY - 90° SKEW

NORTH CAROLINA PROFESSIONAL SEAL 032074 ENGINEER DENA C. SNEAD

REVISIONS						SHEET NO.
NO.	BY:	DATE:	NO.	BY:	DATE:	6
1			1			TOTAL SHEETS
2			2			31

DRAWN BY: LHM DATE: 12/21/12
CHECKED BY: DCS DATE: 01/11/13

8/23/99

0 2.5 5	PROJ. REFERENCE NO.	SHEET NO.
	17BP.1.R.25	7

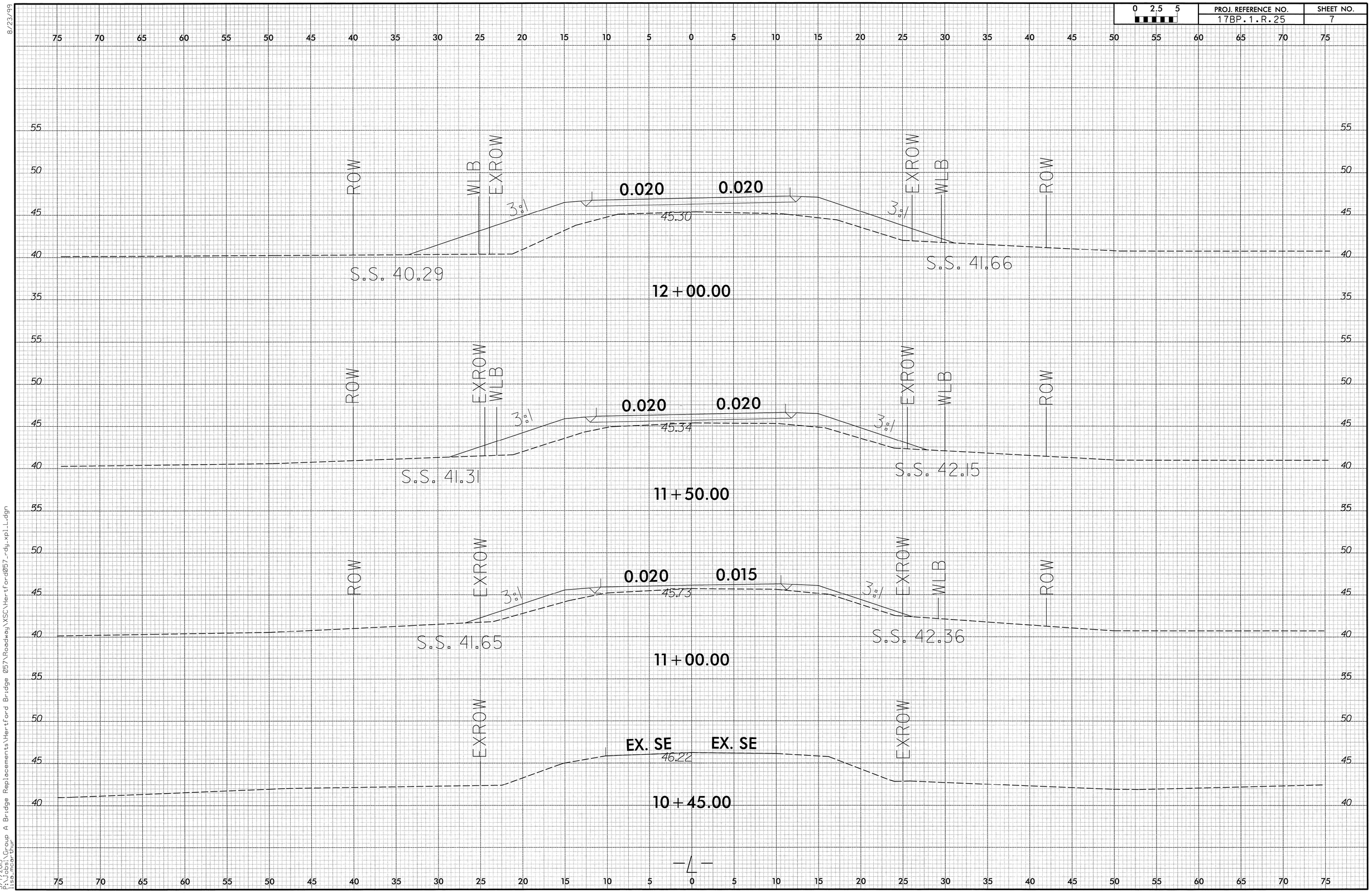

3/7/2013
P:\Jobs\Group A Bridge Replacements\Hertford Bridge 057\Roadway\XSC\Hertford057_rdy_xpl_L.dgn
lisa.moar-thur

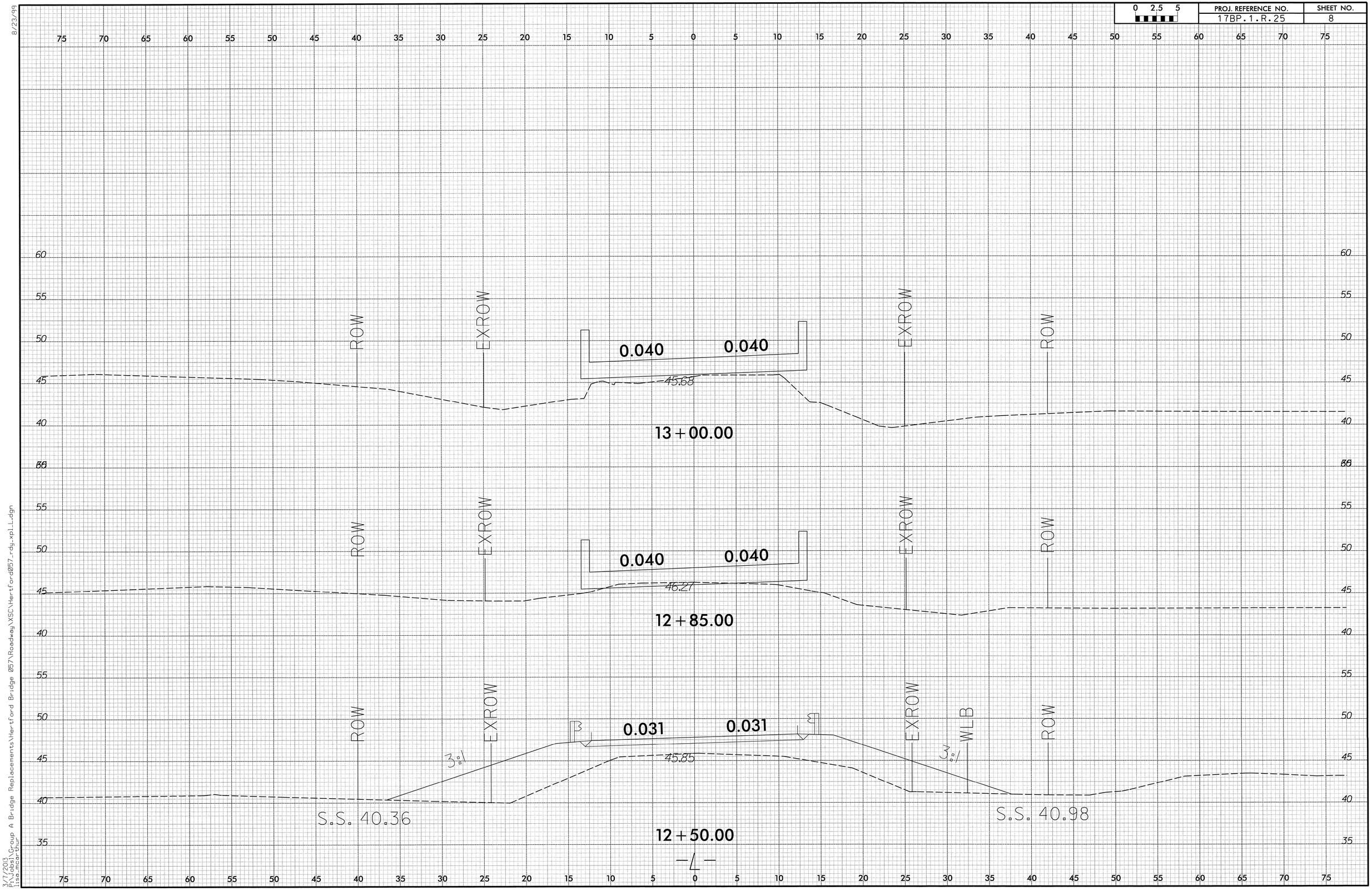

8/23/99

3/7/2013
P:\Jobs1\Group A Bridge Replacements\Hertford Bridge 057\Roadway\XSC\Hertford057_rdy_xpl_L.dgn
lisa_mcarthur

8/23/99

0 2.5 5	PROJ. REFERENCE NO.	SHEET NO.
	17BP.1.R.25	9

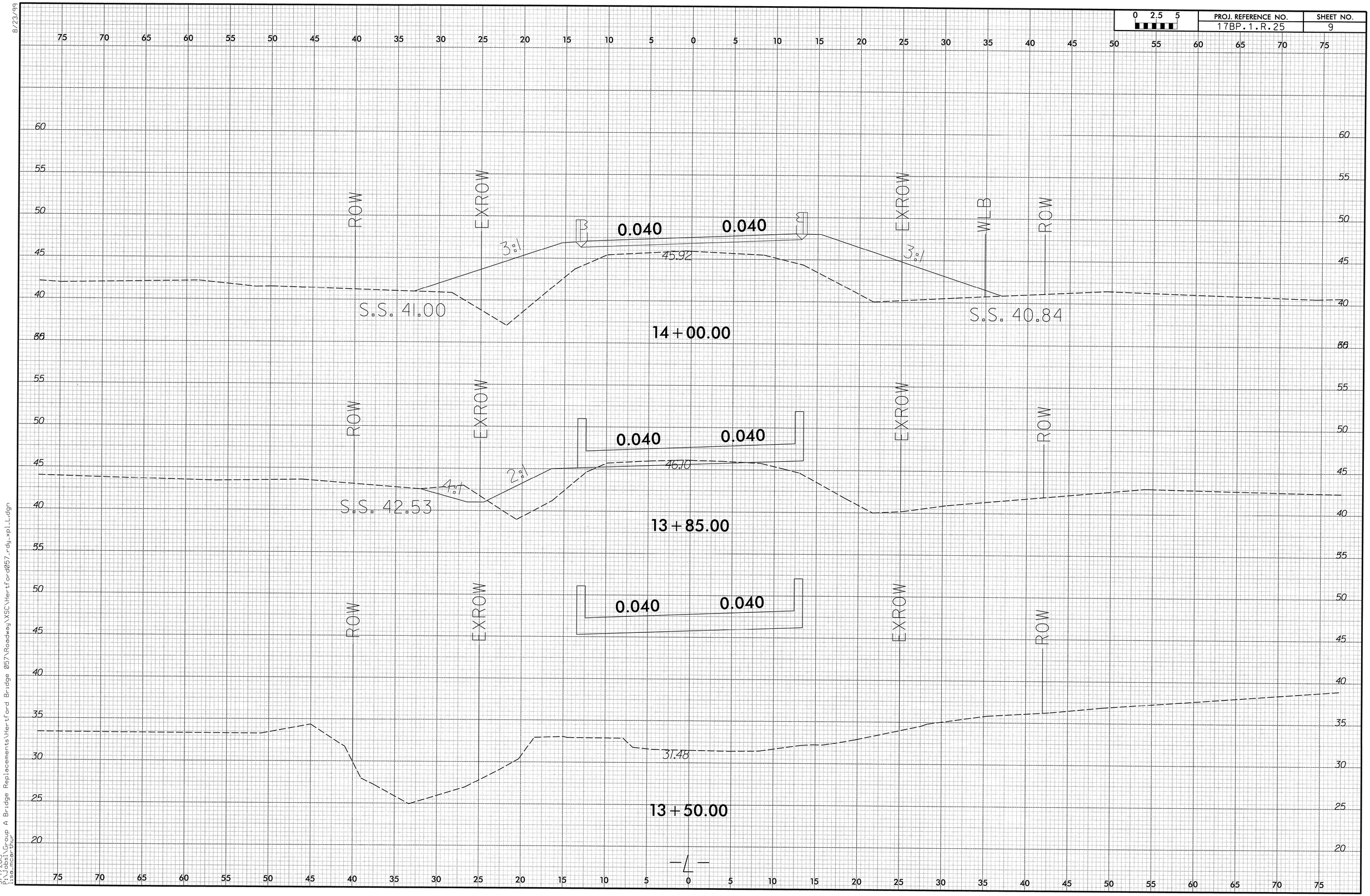

3/7/2013
P:\Jobs\Group A Bridge Replacements\Hertford Bridge 057\Roadway\XSC\Hertford057_rdy_xpl_L.dgn
lisa.mcarthur

8/23/99

0 2,5 5	PROJ. REFERENCE NO.	SHEET NO.
	17BP.1.R.25	10

75 70 65 60 55 50 45 40 35 30 25 20 15 10 5 0 5 10 15 20 25 30 35 40 45 50 55 60 65 70 75

55 50 45 40 35

WLB EXROW EX. SE EX. SE EXROW WLB

43.97

15+90.00

ROW WLB EXROW 3:1 0.020 0.020 3:1 WLB EXROW ROW

44.12

S.S. 40.18 S.S. 40.88

15+50.00

ROW WLB EXROW 3:1 0.020 0.005 3:1 WLB EXROW ROW

44.41

S.S. 40.65 S.S. 41.20

15+00.00

ROW WLB EXROW 3:1 B 0.020 0.017 3:1 WLB EXROW ROW

44.99

S.S. 41.22 S.S. 41.09

14+50.00

—4—

3/7/2013
P:\Jobs\Group A Bridge Replacements\Hertford Bridge 057\Roadway\XSC\Hertford057_rdy_xpl_L.dgn
lisa.mcarthur

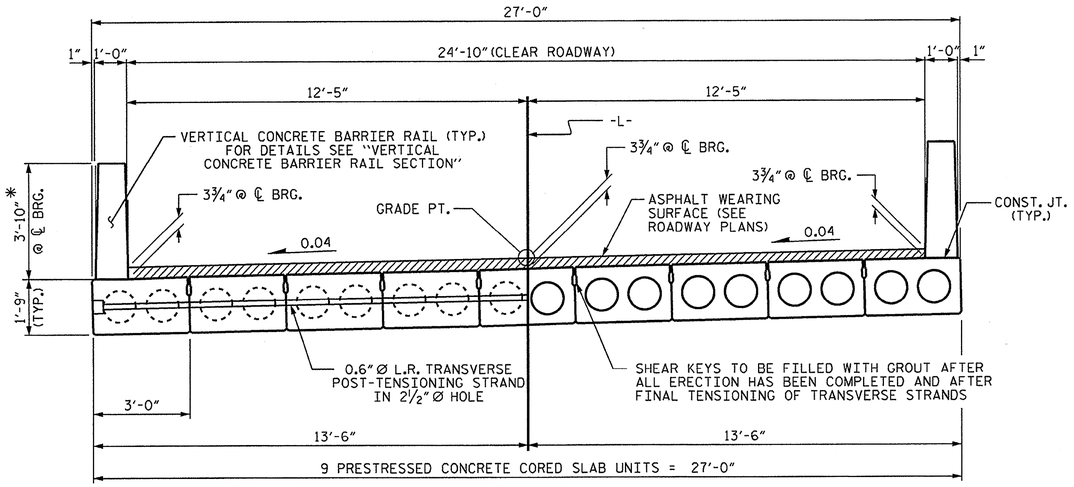

TYPICAL SECTION

* - THE MAXIMUM BARRIER RAIL HEIGHT AND ASPHALT THICKNESS IS SHOWN. THE HEIGHT OF THE BARRIER RAIL AND ASPHALT THICKNESS VARIES WHILE THE TOP OF THE BARRIER RAIL FOLLOWS THE PROFILE OF THE GUTTERLINE. FOR RAIL HEIGHT DETAILS AND ASPHALT THICKNESS SEE THE "VERTICAL CONCRETE BARRIER RAIL SECTION" DETAIL.

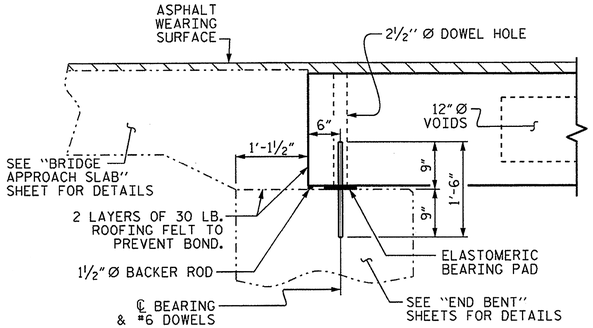

SECTION AT END BENT

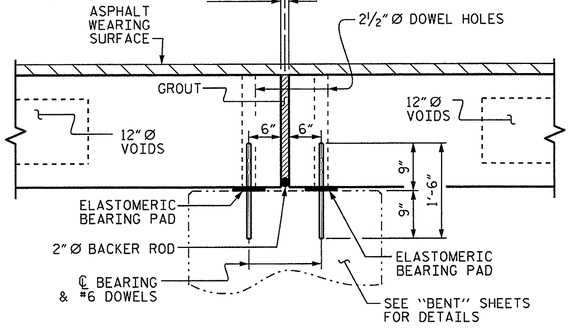

SECTION AT BENT

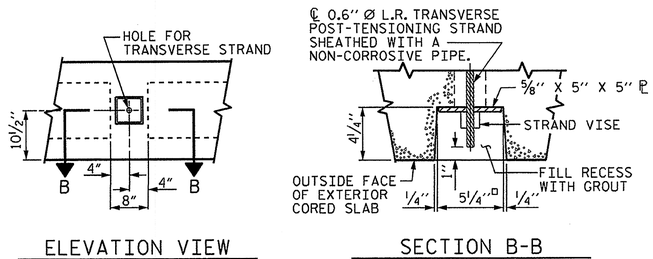

GROUTED RECESS AT END OF POST-TENSIONED STRAND OF CORED SLABS

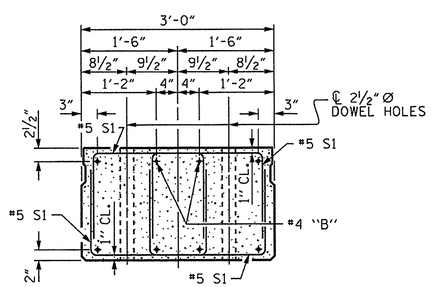

END ELEVATION

SHOWING PLACEMENT OF DOUBLE STIRRUPS AND LOCATION OF DOWEL HOLES. (STRAND LAYOUT NOT SHOWN.) INTERIOR SLAB UNIT SHOWN-EXTERIOR SLAB UNIT SIMILAR EXCEPT SHEAR KEY LOCATION.

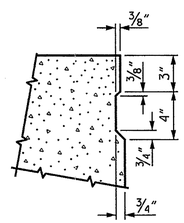

SHEAR KEY DETAIL

NOTE: OMIT SHEAR KEY ON OUTSIDE FACE OF EXTERIOR CORED SLABS.

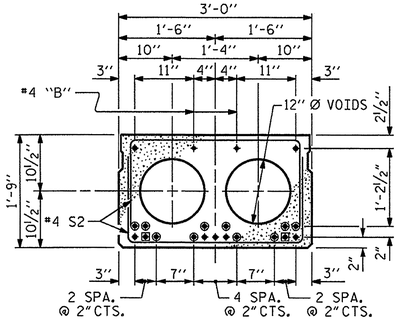

INTERIOR SLAB SECTION (25' UNIT)

(9 STRANDS REQUIRED)

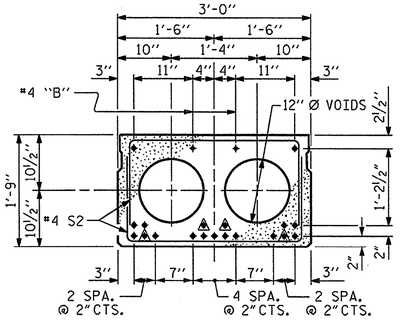

INTERIOR SLAB SECTION (50' UNIT)

(19 STRANDS REQUIRED)

0.6" Ø LOW RELAXATION STRAND LAYOUT

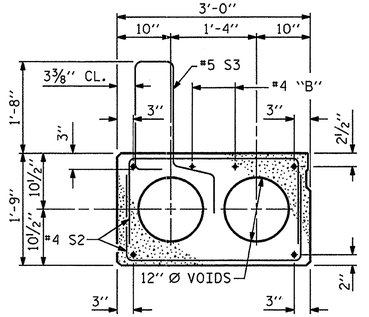

EXT. SLAB SECTION

(FOR PRESTRESSED STRAND LAYOUT, SEE INTERIOR SLAB SECTION.)

▲ BOND SHALL BE BROKEN ON THESE STRANDS FOR A DISTANCE OF 6'-0" FROM END OF CORED SLAB UNIT. SEE STANDARD SPECIFICATIONS, ARTICLE 1078-7.

■ BOND SHALL BE BROKEN ON THESE STRANDS FOR A DISTANCE OF 2'-0" FROM END OF CORED SLAB UNIT. SEE STANDARD SPECIFICATIONS, ARTICLE 1078-7.

◉ OPTIONAL FULL LENGTH DEBONDED STRANDS. THESE STRANDS ARE NOT REQUIRED. IF THE FABRICATOR CHOOSES TO INCLUDE THESE STRANDS IN THE CORED SLAB UNIT, THE STRANDS SHALL BE DEBONDED FOR THE FULL LENGTH OF THE UNIT AT NO ADDITIONAL COST. SEE STANDARD SPECIFICATIONS, ARTICLE 1078-7.

DEBONDING LEGEND

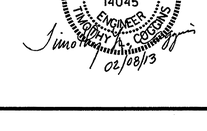

ASSEMBLED BY :	REZA KOUCHEKI DATE : 01-31-13
CHECKED BY :	A.M.LEE, PE DATE : 02-25-13
DRAWN BY : DGE 5/09	REV. 12/11 MAA/AAC
CHECKED BY : BCH 6/09	

PROJECT NO. 17BP.1.R.25

HERTFORD COUNTY

STATION: 13+35.00 -L-

SHEET 1 OF 5

STATE OF NORTH CAROLINA
DEPARTMENT OF TRANSPORTATION
RALEIGH

STANDARD

3'-0" X 1'-9" PRESTRESSED CONCRETE CORED SLAB UNIT 90° SKEW

REVISIONS						SHEET NO.
NO.	BY:	DATE:	NO.	BY:	DATE:	11
1			3			TOTAL SHEETS
2			4			31

STD. NO. 21"PCS2_27_90S

08-FEB-2013 12:24
S:\DPG\Tim\Division 1 LIBR\17BP.1.R.25\Final Plans\17BP1R25_SD_CS.dgn
tcoggins

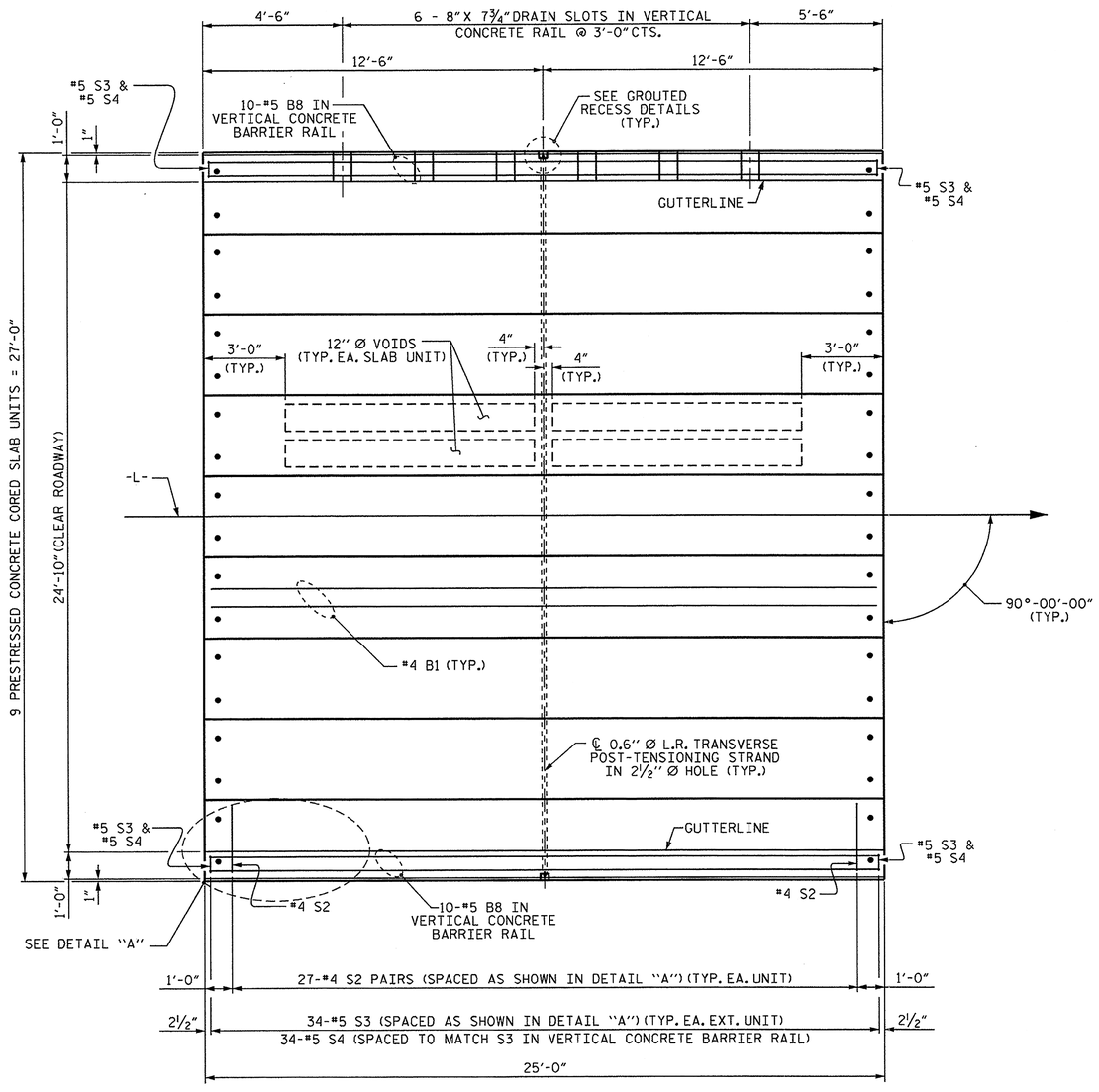

PLAN OF UNIT
SPAN 'A'

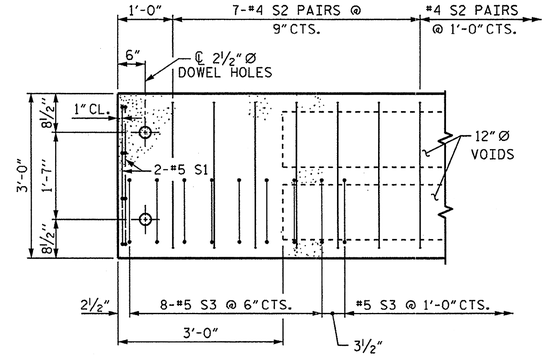

DETAIL "A"

NOTE: EXTERIOR UNIT SHOWN - INTERIOR UNIT SIMILAR EXCEPT OMIT #5 S3 BARS.

PROJECT NO. 17BP.1.R.25

HERTFORD COUNTY

STATION: 13+35.00 -L-

SHEET 2 OF 5

STATE OF NORTH CAROLINA
DEPARTMENT OF TRANSPORTATION
RALEIGH

PLAN OF 25' UNIT 24'-10" CLEAR ROADWAY 90° SKEW

REVISIONS						SHEET NO.
NO.	BY:	DATE:	NO.	BY:	DATE:	12
1			3			TOTAL SHEETS
2			4			31

NORTH CAROLINA PROFESSIONAL SEAL 14045 ENGINEER TIMOTHY L. FORDHAM
02/08/13

ASSEMBLED BY : REZA KOUCHEKI	DATE : 01-31-13		
CHECKED BY : A.M.LEE, PE	DATE : 02-05-13		
DRAWN BY : DGE 5/09	REV. 12/5/11 MAA/AAC		
CHECKED BY : BCH 6/09			

08-FEB-2013 12:24
S:\DPG\TTm\Division 1 LIBR\17BP.1.R.25\Final Plans\17BPIR25_SD_CS.dgn
tcoggins

STD. NO. 21"PCS_27_90S_25L

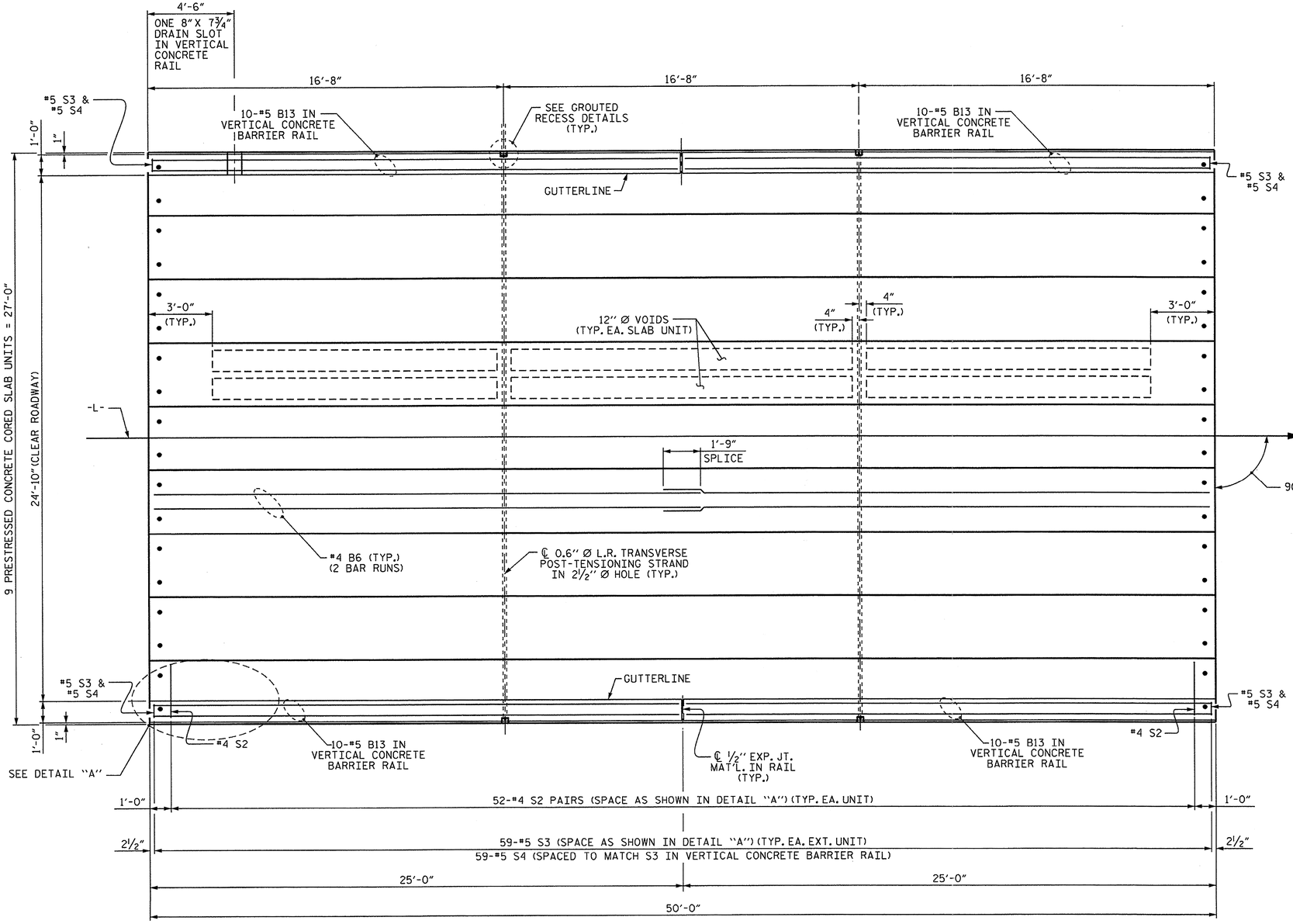

PLAN OF UNIT
SPAN 'B'

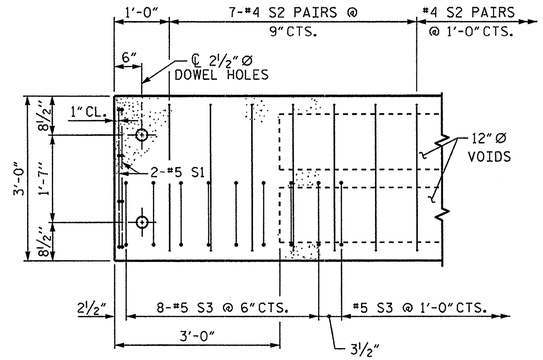

DETAIL "A"
NOTE: EXTERIOR UNIT SHOWN - INTERIOR UNIT SIMILAR EXCEPT OMIT #5 S3 BARS.

PROJECT NO. 17BP.1.R.25
HERTFORD COUNTY
STATION: 13+35.00 -L-
SHEET 3 OF 5

STATE OF NORTH CAROLINA
DEPARTMENT OF TRANSPORTATION
RALEIGH

PLAN OF 50' UNIT 24'-10" CLEAR ROADWAY 90° SKEW

REVISIONS						SHEET NO.
NO.	BY:	DATE:	NO.	BY:	DATE:	13
1			3			TOTAL SHEETS
2			4			31

NORTH CAROLINA PROFESSIONAL SEAL 14045 ENGINEER TIMOTHY A. COGGINS
02/06/13

ASSEMBLED BY : REZA KOUCHEKI	DATE : 01-31-13	
CHECKED BY : A.M.LEE, PE	DATE : 02-05-13	
DRAWN BY : DGE 5/09	REV. 12/5/11 MAA/AAC	
CHECKED BY : BCH 6/09		

08-FEB-2013 12:23
S:\DPG\TIm\Division 1 LIBR\17BP.1.R.25\Final Plans\17BP1R25_SD_CS.dgn
tcoggins

STD. NO. 21"PCS_27_90S_50L

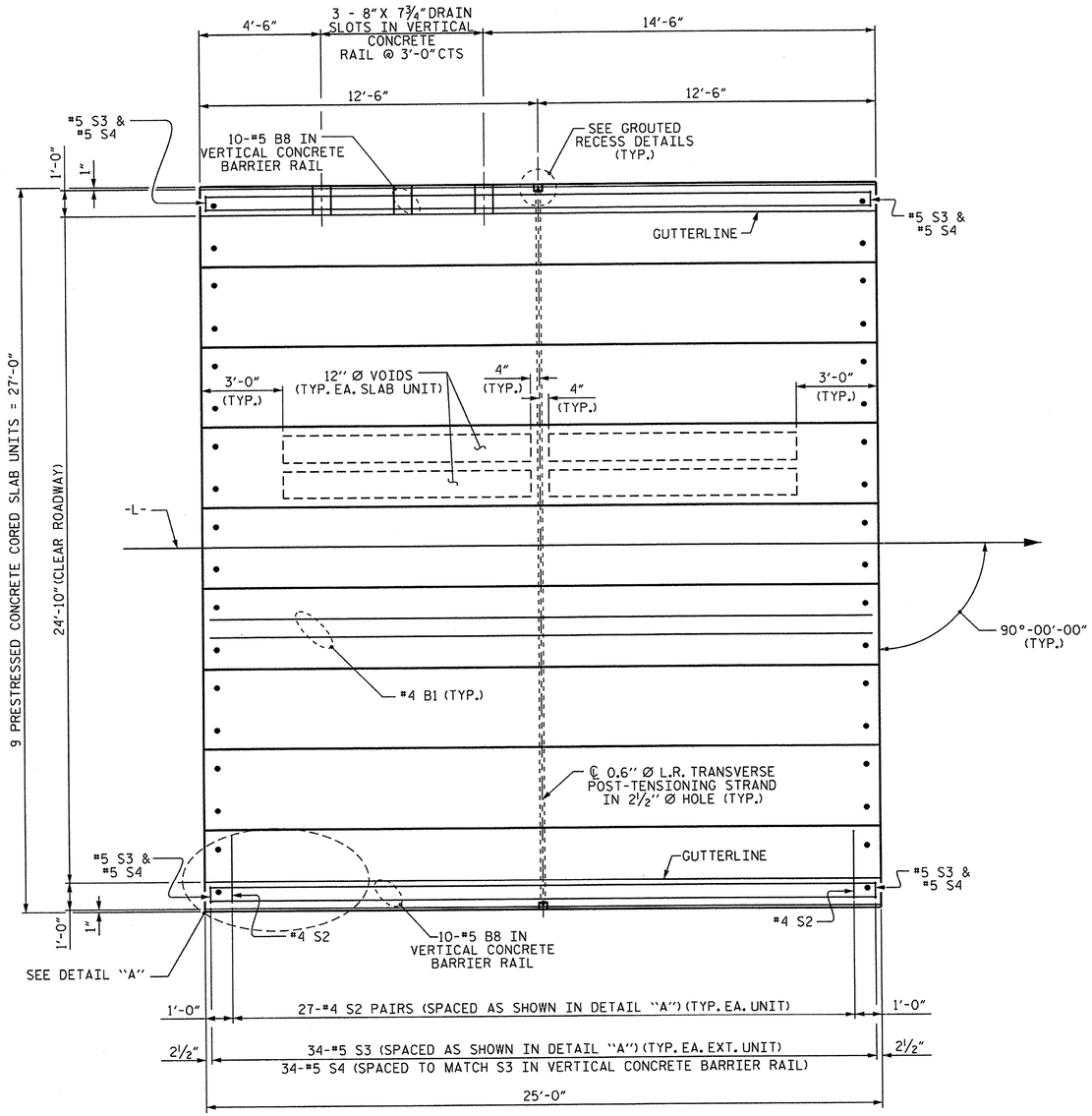

PLAN OF UNIT
SPAN 'C'

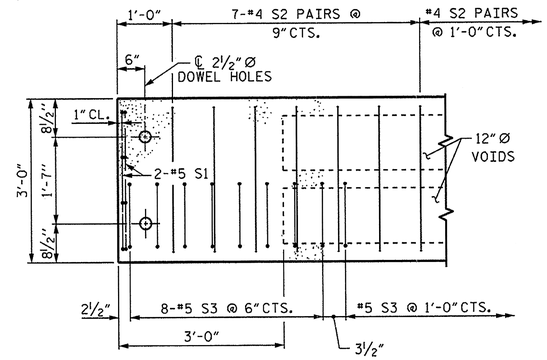

DETAIL "A"

NOTE: EXTERIOR UNIT SHOWN - INTERIOR UNIT SIMILAR EXCEPT OMIT #5 S3 BARS.

PROJECT NO. 17BP.1.R.25

HERTFORD COUNTY

STATION: 13+35.00 -L-

SHEET 4 OF 5

STATE OF NORTH CAROLINA
DEPARTMENT OF TRANSPORTATION
RALEIGH

PLAN OF 25' UNIT 24'-10" CLEAR ROADWAY 90° SKEW

REVISIONS						SHEET NO.
NO.	BY:	DATE:	NO.	BY:	DATE:	14
1			3			TOTAL SHEETS
2			4			31

NORTH CAROLINA PROFESSIONAL SEAL 14045 ENGINEER TIMOTHY K. COGGINS
02/08/13

ASSEMBLED BY : REZA KOUCHEKI	DATE : 01-31-13	
CHECKED BY : A.M.LEE, PE	DATE : 02-05-13	
DRAWN BY : DGE 5/09	REV. 12/5/11 MAA/AAC	
CHECKED BY : BCH 6/09		

08-FEB-2013 12:23
S:\DPG1\Tm\Division 1 LIBR\17BP.1.R.25\Final Plans\17BPIR25_SD_CS.dgn
tcoggins

STD. NO. 21"PCS_27_90S_25L

CORED SLABS REQUIRED

	NUMBER	LENGTH	TOTAL LENGTH
25' UNIT			
EXTERIOR C.S.	4	25'-0"	100'-0"
INTERIOR C.S.	14	25'-0"	350'-0"
TOTAL			

CORED SLABS REQUIRED

	NUMBER	LENGTH	TOTAL LENGTH
50' UNIT			
EXTERIOR C.S.	2	50'-0"	100'-0"
INTERIOR C.S.	7	50'-0"	350'-0"
TOTAL			

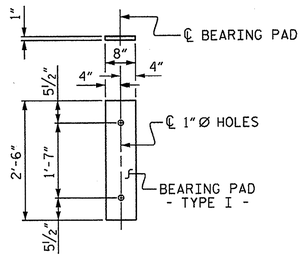

FIXED END
(TYPE I - 54 REQ'D)

ELASTOMERIC BEARING DETAILS

ELASTOMER IN ALL BEARINGS SHALL BE 50 DUROMETER HARDNESS.

DEAD LOAD DEFLECTION AND CAMBER

	3'-0" x 1'-9"
25' CORED SLAB UNIT	0.6"Ø L.R. STRAND
CAMBER (SLAB ALONE IN PLACE)	½" ↑
DEFLECTION DUE TO SUPERIMPOSED DEAD LOAD**	⅛" ↓
FINAL CAMBER	⅜" ↑

** INCLUDES FUTURE WEARING SURFACE

DEAD LOAD DEFLECTION AND CAMBER

	3'-0" x 1'-9"
50' CORED SLAB UNIT	0.6"Ø L.R. STRAND
CAMBER (SLAB ALONE IN PLACE)	2½" ↑
DEFLECTION DUE TO SUPERIMPOSED DEAD LOAD**	¼" ↓
FINAL CAMBER	2¼" ↑

** INCLUDES FUTURE WEARING SURFACE

BILL OF MATERIAL FOR ONE 25' CORED SLAB UNIT

BAR	NUMBER	SIZE	TYPE	EXTERIOR UNIT LENGTH	EXTERIOR UNIT WEIGHT	INTERIOR UNIT LENGTH	INTERIOR UNIT WEIGHT
B1	2	#4	STR	24'-8"	33	24'-8"	33
S1	8	#5	3	4'-3"	35	4'-3"	35
S2	54	#4	3	5'-4"	192	5'-4"	192
* S3	34	#5	1	6'-2"	219		
REINFORCING STEEL			LBS.		260		260
* EPOXY COATED REINFORCING STEEL			LBS.		219		
5000 P.S.I. CONCRETE			CU. YDS.		3.7		3.7
0.6"Ø L.R. STRANDS			No.		9		9

BILL OF MATERIAL FOR ONE 50' CORED SLAB UNIT

BAR	NUMBER	SIZE	TYPE	EXTERIOR UNIT LENGTH	EXTERIOR UNIT WEIGHT	INTERIOR UNIT LENGTH	INTERIOR UNIT WEIGHT
B6	4	#4	STR	25'-9"	69	25'-9"	69
S1	8	#5	3	4'-3"	35	4'-3"	35
S2	104	#4	3	5'-4"	371	5'-4"	371
* S3	59	#5	1	6'-2"	379		
REINFORCING STEEL			LBS.		475		475
* EPOXY COATED REINFORCING STEEL			LBS.		379		
6500 P.S.I. CONCRETE			CU. YDS.		7.1		7.1
0.6"Ø L.R. STRANDS			No.		19		19

BAR TYPES

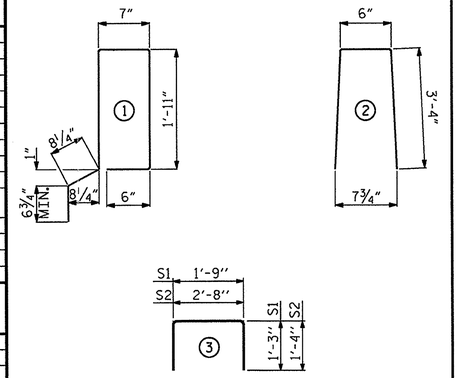

ALL BAR DIMENSIONS ARE OUT TO OUT

GRADE 270 STRANDS

	0.6"Ø L.R.
AREA (SQUARE INCHES)	0.217
ULTIMATE STRENGTH (LBS. PER STRAND)	58,600
APPLIED PRESTRESS (LBS. PER STRAND)	43,950

BILL OF MATERIAL FOR VERTICAL CONCRETE BARRIER RAIL

BAR	BARS PER PAIR OF EXTERIOR UNITS	TOTAL NO.	SIZE	TYPE	LENGTH	WEIGHT
	25' UNIT					
* B8	20	40	#5	STR	24'-7"	1026
* S4	68	136	#5	2	7'-2"	1017
* EPOXY COATED REINFORCING STEEL				LBS.		1043
CLASS AA CONCRETE				CU.YDS.		13.2
TOTAL VERTICAL CONCRETE BARRIER RAIL				LN. FT.		100.25

BILL OF MATERIAL FOR VERTICAL CONCRETE BARRIER RAIL

BAR	BARS PER PAIR OF EXTERIOR UNITS	TOTAL NO.	SIZE	TYPE	LENGTH	WEIGHT
	50' UNIT					
* B13	40	40	#5	STR	24'-7"	1026
* S4	118	118	#5	2	7'-2"	882
* EPOXY COATED REINFORCING STEEL				LBS.		1908
CLASS AA CONCRETE				CU.YDS.		13.1
TOTAL VERTICAL CONCRETE BARRIER RAIL				LN. FT.		100.25

GUTTERLINE ASPHALT THICKNESS & RAIL HEIGHT

24'-10" CLEAR ROADWAY	ASPHALT OVERLAY THICKNESS @ MID-SPAN	RAIL HEIGHT @ MID-SPAN
	SUPERED SECTION	
25' UNITS	3⅜"	3'-9⅝"
50' UNITS	1½"	3'-7¾"

CONCRETE RELEASE STRENGTH

UNIT	PSI
25' UNITS	4000
50' UNITS	4900

NOTES

ALL PRESTRESSING STRANDS SHALL BE 7-WIRE LOW RELAXATION GRADE 270 STRANDS AND SHALL CONFORM TO AASHTO M203 EXCEPT FOR SAMPLING REQUIREMENTS WHICH SHALL BE IN ACCORDANCE WITH THE STANDARD SPECIFICATIONS.

ALL REINFORCING STEEL CAST WITH THE CORED SLAB SECTIONS SHALL BE GRADE 60 AND SHALL BE INCLUDED IN THE UNIT PRICE BID FOR PRESTRESSED CONCRETE CORED SLABS.

RECESSES FOR TRANSVERSE STRANDS SHALL BE GROUTED AFTER THE TENSIONING OF THE STRANDS.

THE 2½"Ø DOWEL HOLES AT FIXED ENDS OF SLAB SECTIONS SHALL BE FILLED WITH NON-SHRINK GROUT.

THE BACKER RODS SHALL CONFORM TO THE REQUIREMENTS OF TYPE M BOND BREAKER. SEE SECTION 1028 OF THE STANDARD SPECIFICATIONS.

WHEN CORED SLABS ARE CAST, AN INTERNAL HOLD-DOWN SYSTEM SHALL BE EMPLOYED TO PREVENT VOIDS FROM RISING OR MOVING SIDEWAYS. AT LEAST SIX WEEKS PRIOR TO CASTING CORED SLABS, THE CONTRACTOR SHALL SUBMIT TO THE ENGINEER FOR REVIEW AND COMMENT, DETAILED DRAWINGS OF THE PROPOSED HOLD-DOWN SYSTEM. IN ADDITION TO STRUCTURAL DETAILS, LOCATION AND SPACING OF THE HOLD-DOWNS SHALL BE INDICATED.

ALL REINFORCING STEEL IN THE VERTICAL CONCRETE BARRIER RAIL SHALL BE EPOXY COATED.

PRESTRESSING STRANDS SHALL BE CUT FLUSH WITH THE CORED SLAB UNIT ENDS.

APPLY EPOXY PROTECTIVE COATING TO CORED SLAB UNIT ENDS.

GROOVED CONTRACTION JOINTS, ½" IN DEPTH, SHALL BE TOOLED IN ALL EXPOSED FACES OF THE BARRIER RAIL AND IN ACCORDANCE WITH ARTICLE 825-10(B) OF THE STANDARD SPECIFICATIONS. A CONTRACTION JOINT SHALL BE LOCATED AT EACH THIRD POINT BETWEEN BARRIER RAIL EXPANSION JOINTS. ONLY ONE CONTRACTION JOINT IS REQUIRED AT MIDPOINT OF BARRIER RAIL SEGMENTS LESS THAN 20 FEET IN LENGTH AND NO CONTRACTION JOINTS ARE REQUIRED FOR THOSE SEGMENTS LESS THAN 10 FEET IN LENGTH.

TRANSVERSE POST TENSIONING OF THE CORED SLAB UNITS SHALL BE DONE IN ACCORDANCE WITH THE STANDARD SPECIFICATIONS.

THE TRANSFER OF LOAD FROM THE ANCHORAGES TO THE CORED SLAB UNIT SHALL BE DONE WHEN THE CONCRETE HAS REACHED A COMPRESSIVE STRENGTH OF NOT LESS THAN THE REQUIRED STRENGTH SHOWN IN THE "CONCRETE RELEASE STRENGTH" TABLE.

FOR GROUT FOR STRUCTURES, SEE SPECIAL PROVISIONS.

THE DRAIN OPENING AT THE GUTTERLINE SHALL BE A MAXIMUM OF 8" X 7¾". THE HEIGHT OF THE BLOCKOUT IN THE VERTICAL CONCRETE BARRIER RAIL SHALL EXTEND FROM THE TOP OF THE CORED SLAB UNIT TO THE TOP OF THE DRAIN OPENING.

APPLY EPOXY PROTECTIVE COATING TO EXTERIOR FACE OF THE EXTERIOR CORED SLAB UNITS THAT REQUIRE DRAINS IN THE BARRIER RAIL.

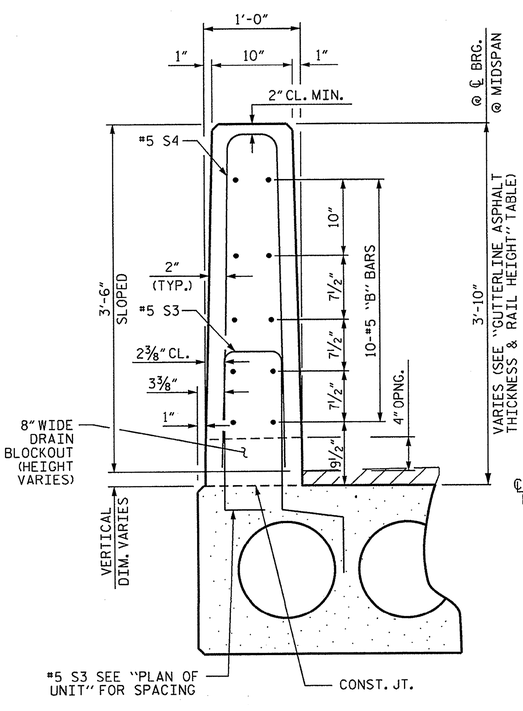

VERTICAL CONCRETE BARRIER RAIL SECTION

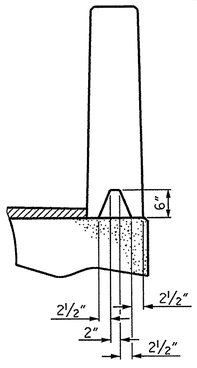

SECTION S-S
AT DAM IN OPEN JOINT
(THIS IS TO BE USED ONLY WHEN SLIP FORM IS USED)

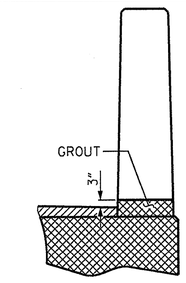

SECTION T-T
AT OPEN JOINT AT BENT
(THIS IS TO BE USED WHERE FOAM JOINT IS NOT USED)

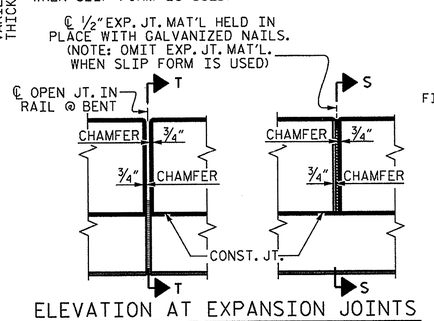

ELEVATION AT EXPANSION JOINTS

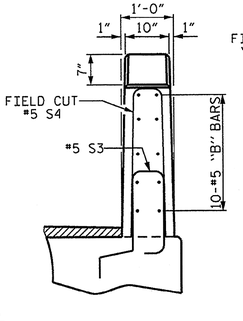

END VIEW

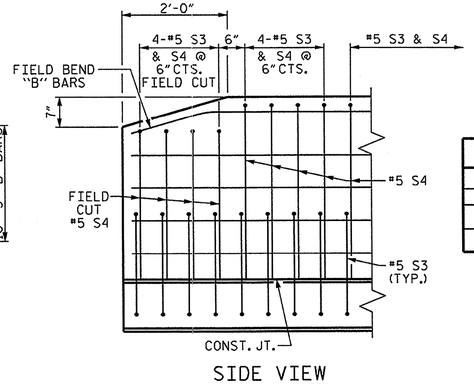

SIDE VIEW

END OF RAIL DETAILS

PROJECT NO. 17BP.1.R.25
HERTFORD COUNTY
STATION: 13+35.00 -L-
SHEET 5 OF 5

STATE OF NORTH CAROLINA
DEPARTMENT OF TRANSPORTATION
RALEIGH

STANDARD
3'-0" X 1'-9"
PRESTRESSED CONCRETE
CORED SLAB UNIT
90° SKEW

REVISIONS						SHEET NO.
NO.	BY:	DATE:	NO.	BY:	DATE:	15
1			3			TOTAL SHEETS
2			4			31

ASSEMBLED BY : REZA KOUCHEKI	DATE : 01-31-13
CHECKED BY : A.M.LEE, PE	DATE : 02-05-13
DRAWN BY : DGE 5/09	REV. 12/11 MAA/AAC
CHECKED BY : BCH 6/09	

08-FEB-2013 12:22
S:\DPG\TIM\Division 1 LIBR\17BP.1.R.25\Final Plans\17BP1R25_SD_CS.dgn
tcoggins

STD. NO. 21"PCS3_27_90S

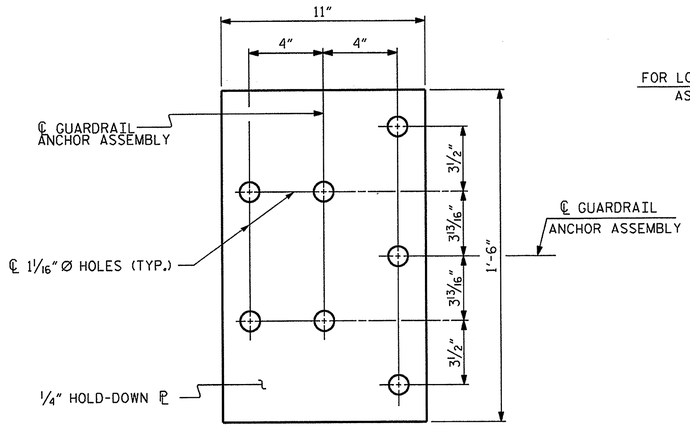

PLAN

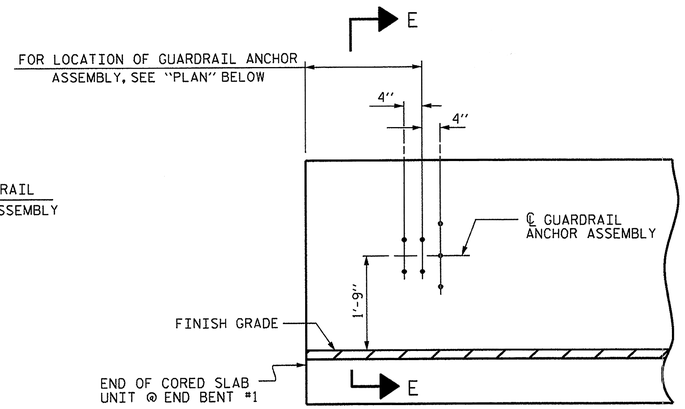

ELEVATION

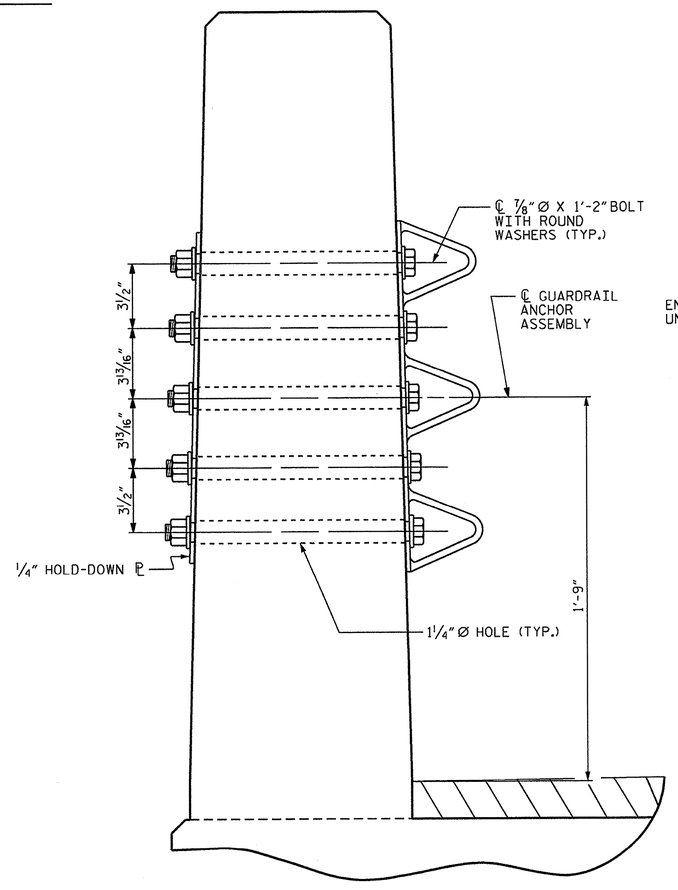

SECTION E-E

GUARDRAIL ANCHOR ASSEMBLY DETAILS

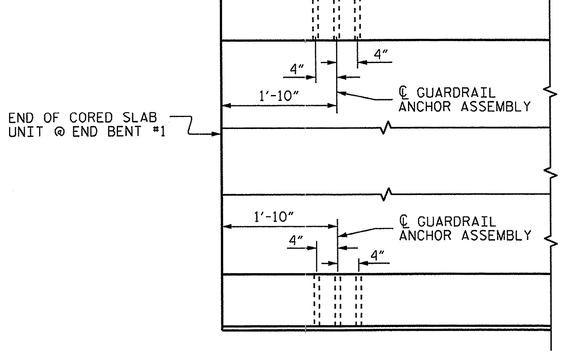

PLAN

LOCATION OF ANCHORS FOR GUARDRAIL

END BENT #1 SHOWN, END BENT #2 SIMILAR.

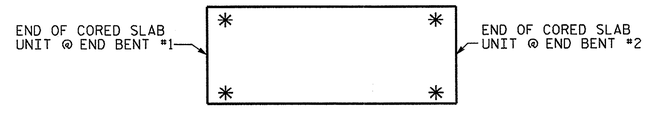

SKETCH SHOWING POINTS OF ATTACHMENT

✳ DENOTES GUARDRAIL ANCHOR ASSEMBLY

NOTES

THE GUARDRAIL ANCHOR ASSEMBLY SHALL CONSIST OF A 1/4" HOLD DOWN PLATE AND 7 - 7/8" Ø BOLTS WITH NUTS AND WASHERS.

THE HOLD-DOWN PLATE SHALL CONFORM TO AASHTO M270 GRADE 36. AFTER FABRICATION, THE HOLD-DOWN PLATE SHALL BE HOT-DIP GALVANIZED IN ACCORDANCE WITH AASHTO M111.

BOLTS SHALL CONFORM TO THE REQUIREMENTS OF ASTM A307 AND NUTS SHALL CONFORM TO THE REQUIREMENTS OF AASHTO M291. BOLTS, NUTS AND WASHERS SHALL BE GALVANIZED. (AT THE CONTRACTOR'S OPTION, STAINLESS STEEL BOLTS, NUTS AND WASHERS MAY BE USED AS AN ALTERNATE FOR THE 7/8" Ø GALVANIZED BOLTS, NUTS AND WASHERS. THEY SHALL CONFORM TO OR EXCEED THE MECHANICAL REQUIREMENTS OF ASTM A307. THE USE OF THIS ALTERNATE SHALL BE APPROVED BY THE ENGINEER.)

THE GUARDRAIL ANCHOR ASSEMBLY IS REQUIRED AT ALL POINTS WHERE APPROACH GUARDRAIL IS TO BE ATTACHED TO THE END OF BARRIER RAIL. FOR POINTS OF ATTACHMENT, SEE SKETCH.

AFTER INSTALLATION, THE EXPOSED THREAD OF THE BOLT SHALL BE BURRED WITH A SHARP POINTED TOOL.

THE COST OF THE GUARDRAIL ANCHOR ASSEMBLY SHALL BE INCLUDED IN THE UNIT CONTRACT PRICE BID FOR VERTICAL CONCRETE BARRIER RAIL.

THE VERTICAL REINFORCING BARS MAY BE SHIFTED SLIGHTLY IN THE VERTICAL CONCRETE BARRIER RAIL TO CLEAR ASSEMBLY BOLTS.

THE 1 1/4" Ø HOLES SHALL BE FORMED OR DRILLED WITH A CORE BIT. IMPACT TOOLS WILL NOT BE PERMITTED. ANY CONCRETE DAMAGED BY THIS WORK SHALL BE REPAIRED TO THE SATISFACTION OF THE ENGINEER.

PROJECT NO. 17BP.1.R.25

HERTFORD COUNTY

STATION: 13+35.00 -L-

STATE OF NORTH CAROLINA
DEPARTMENT OF TRANSPORTATION
RALEIGH

STANDARD
GUARDRAIL ANCHORAGE FOR VERTICAL CONCRETE BARRIER RAIL

REVISIONS						SHEET NO.
NO.	BY:	DATE:	NO.	BY:	DATE:	16
1			3			TOTAL SHEETS
2			4			31

NORTH CAROLINA PROFESSIONAL SEAL 14045 ENGINEER TIMOTHY C. COGGINS
02/08/13

ASSEMBLED BY : REZA KOUCHEKI	DATE : 02-04-13
CHECKED BY : A.M.LEE, PE	DATE : 02-05-13
DRAWN BY : MAA 5/10	ADDED 5/6/10
CHECKED BY : GM 5/10	REV. 10/1/11 MAA/GM
	REV. 12/5/11 MAA/GM

08-FEB-2013 12:22
S:\DPG1\Tim\Division 1 LIBR\17BP.1.R.25\Final Plans\17BPIR25_SD_CS.dgn
tcoggins

(SHT 1) STD. NO. GRA3

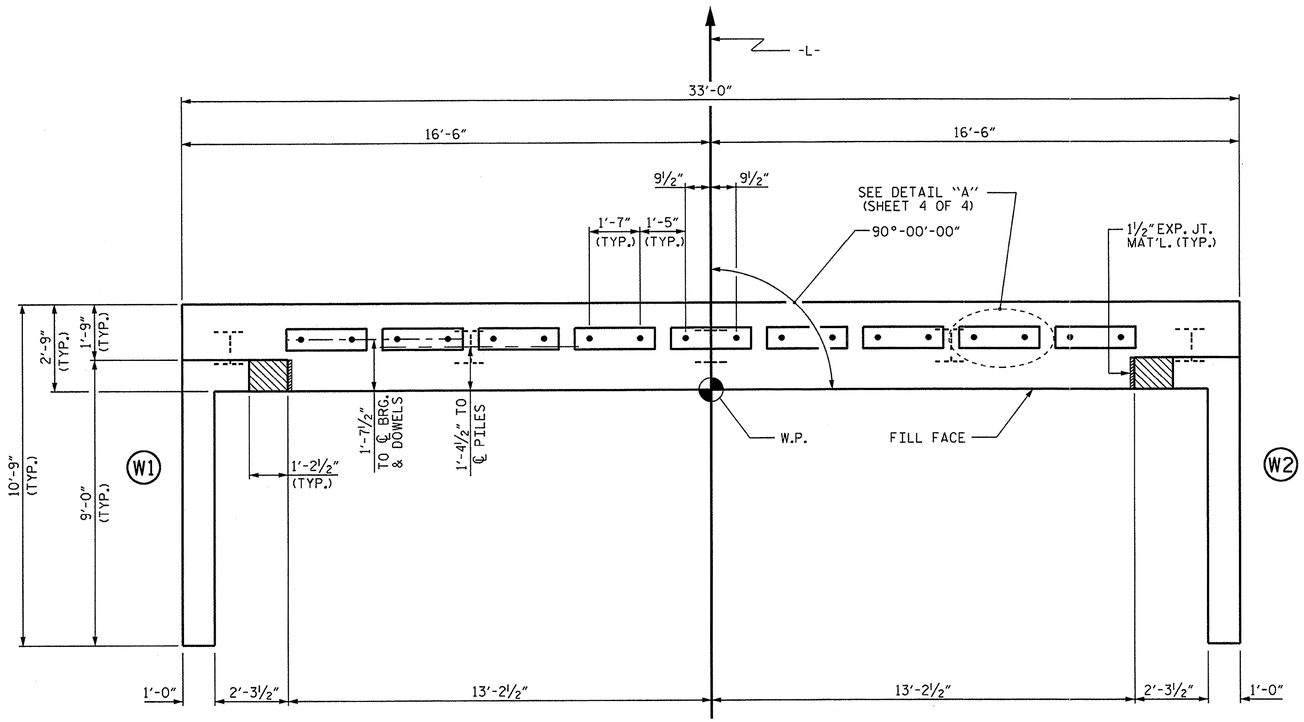

PLAN

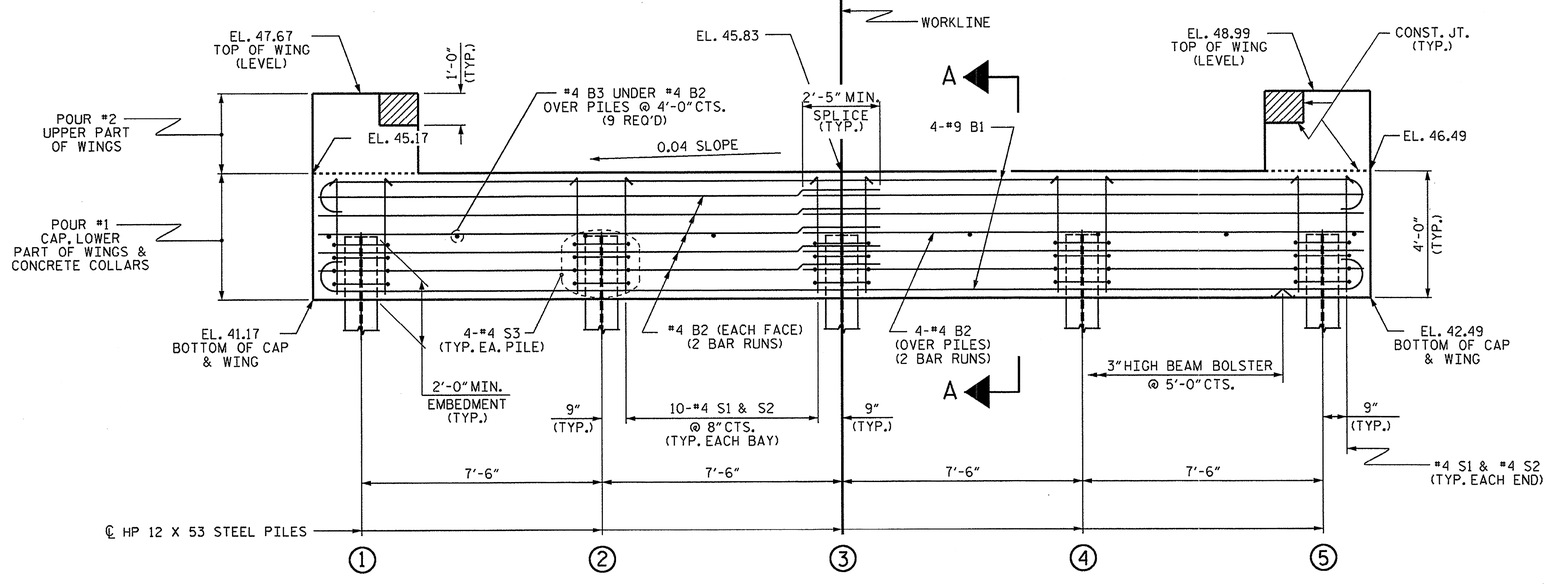

ELEVATION

WINGS NOT SHOWN FOR CLARITY.
FOR SECTION A-A, SEE SHEET 4 OF 4.
CONCRETE COLLARS FOR STEEL PILES NOT SHOWN IN PLAN AND ELEVATION VIEWS FOR CLARITY.
SEE "CORROSION PROTECTION FOR STEEL PILES DETAIL", SHEET 4 OF 4.

NOTES

STIRRUPS IN CAP MAY BE SHIFTED AS NECESSARY TO CLEAR DOWELS.

THE CONCRETE IN THE SHADED AREA OF THE WING SHALL BE POURED AFTER THE VERTICAL CONCRETE BARRIER RAIL IS CAST IF SLIP FORMING IS USED.

FOR PILE SPLICE DETAILS, SEE SHEET 4 OF 4.

FOR WING DETAILS, SEE SHEET 3 OF 4.

INSTALL THE 4" DIA. DRAIN PIPE THROUGH THE WING WALL AS REQUIRED FOR REINFORCED BRIDGE APPROACH FILLS, SEE THE ROADWAY PLANS. REINFORCING STEEL IN THE WING WALL MAY BE SHIFTED AS NECESSARY TO CLEAR THE DRAIN PIPE.

TOP OF PILE ELEVATIONS	
①	43.25
②	43.55
③	43.85
④	44.15
⑤	44.45

PROJECT NO. 17BP.1.R.25
HERTFORD COUNTY
STATION: 13+35.00 -L-

SHEET 1 OF 4

STATE OF NORTH CAROLINA
DEPARTMENT OF TRANSPORTATION
RALEIGH

SUBSTRUCTURE

END BENT No. 1

NORTH CAROLINA PROFESSIONAL SEAL 14045 ENGINEER TIMOTHY A. COGGINS
02/08/13

REVISIONS						SHEET NO.
NO.	BY:	DATE:	NO.	BY:	DATE:	17
1			3			TOTAL SHEETS
2			4			31

ASSEMBLED BY : REZA KOUCHEKI DATE : 01-31-13
CHECKED BY : A.M.LEE, PE DATE : 02-05-13
DRAWN BY : WJH 12/11
CHECKED BY : AAC 12/11

08-FEB-2013 12:21
S:\DPGI\Tim\Division 1 LIBR\17BP.1.R.25\Final Plans\17BP1R25_SD_CS.dgn
tcoggins

STD. NO. EB_27_90S4

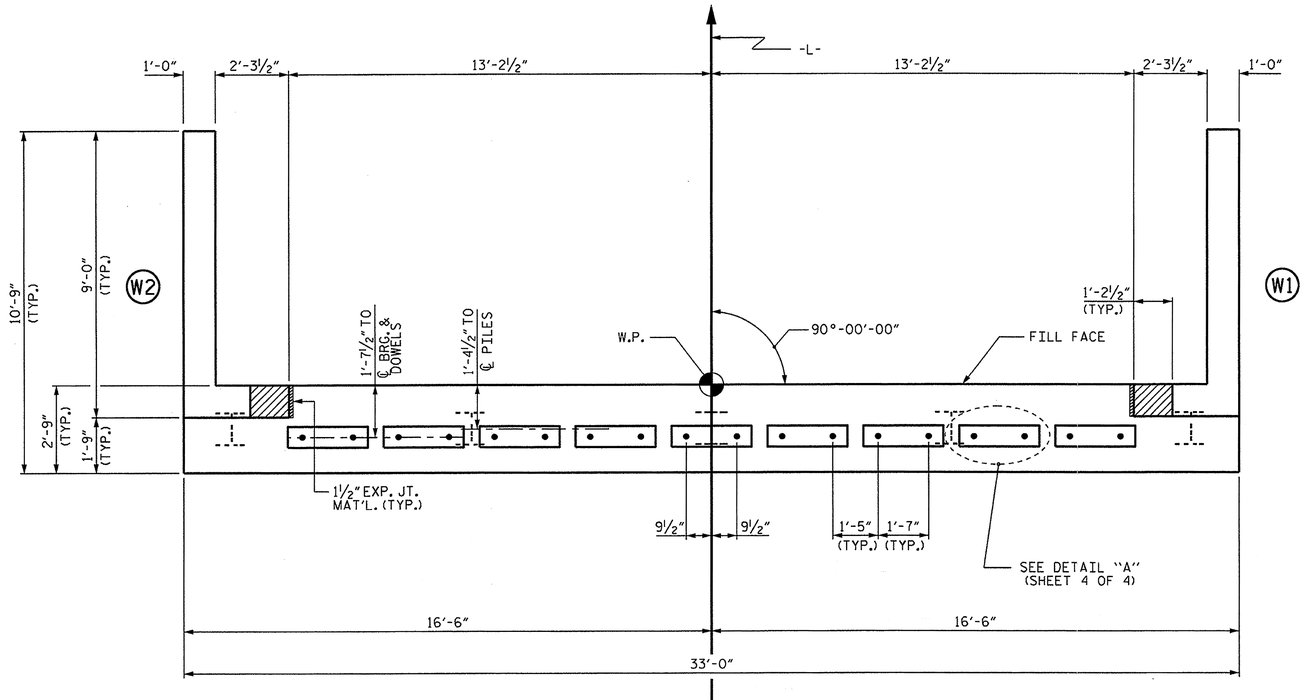

PLAN

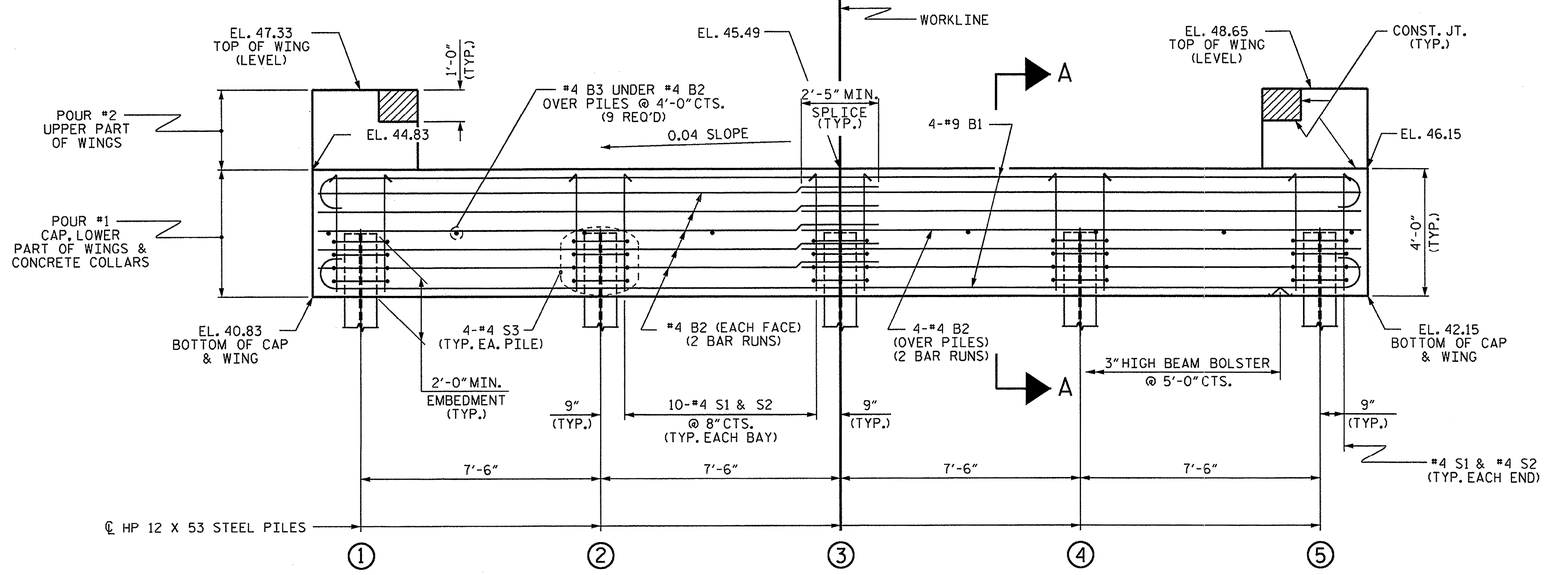

ELEVATION

WINGS NOT SHOWN FOR CLARITY.
FOR SECTION A-A, SEE SHEET 4 OF 4.
CONCRETE COLLARS FOR STEEL PILES NOT SHOWN IN PLAN AND ELEVATION VIEWS FOR CLARITY.
SEE "CORROSION PROTECTION FOR STEEL PILES DETAIL", SHEET 4 OF 4.

NOTES

STIRRUPS IN CAP MAY BE SHIFTED AS NECESSARY TO CLEAR DOWELS.

THE CONCRETE IN THE SHADED AREA OF THE WING SHALL BE POURED AFTER THE VERTICAL CONCRETE BARRIER RAIL IS CAST IF SLIP FORMING IS USED.

FOR PILE SPLICE DETAILS, SEE SHEET 4 OF 4.

FOR WING DETAILS, SEE SHEET 3 OF 4.

INSTALL THE 4" DIA. DRAIN PIPE THROUGH THE WING WALL AS REQUIRED FOR REINFORCED BRIDGE APPROACH FILLS, SEE THE ROADWAY PLANS. REINFORCING STEEL IN THE WING WALL MAY BE SHIFTED AS NECESSARY TO CLEAR THE DRAIN PIPE.

TOP OF PILE ELEVATIONS	
①	42.91
②	43.21
③	43.51
④	43.81
⑤	44.11

PROJECT NO. 17BP.1.R.25
HERTFORD COUNTY
STATION: 13+35.00 -L-

SHEET 2 OF 4

STATE OF NORTH CAROLINA
DEPARTMENT OF TRANSPORTATION
RALEIGH

SUBSTRUCTURE

END BENT No. 2

NORTH CAROLINA PROFESSIONAL SEAL 14045 ENGINEER TIMOTHY A. COGGINS
02/08/13

REVISIONS						SHEET NO.
NO.	BY:	DATE:	NO.	BY:	DATE:	18
1			3			TOTAL SHEETS
2			4			31

ASSEMBLED BY : REZA KOUCHEKI DATE : 01-31-13
CHECKED BY : A.M.LEE, PE DATE : 02-05-13
DRAWN BY : WJH 12/11
CHECKED BY : AAC 12/11

08-FEB-2013 12:21
S:\DPG\TIm\Division 1 LIBR\17BP.1.R.25\Final Plans\17BP1R25_SD_CS.dgn
tcoggins

STD. NO. EB_27_90S4

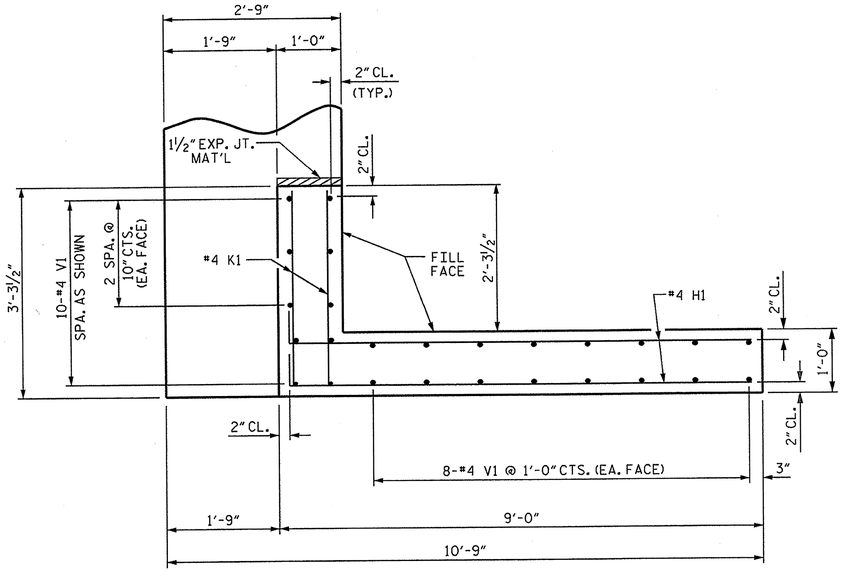

PLAN OF WING (W1)

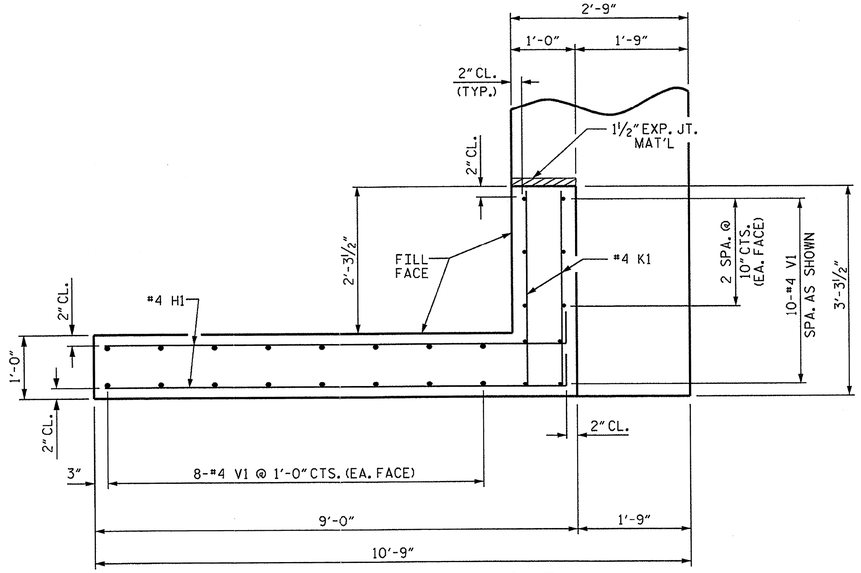

PLAN OF WING (W2)

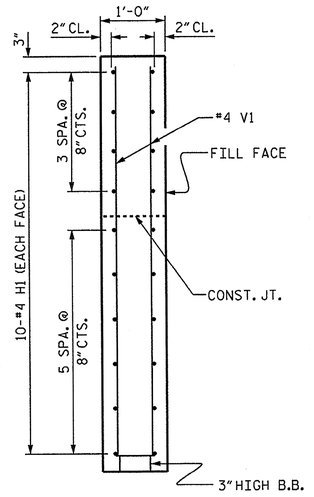

SECTION X-X

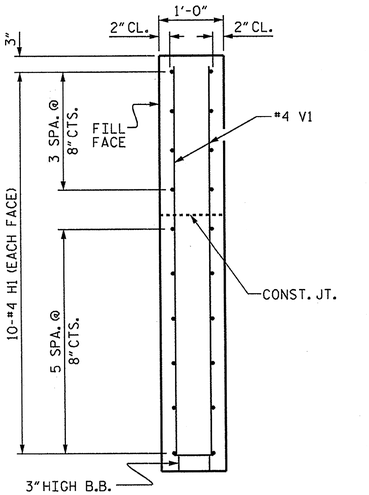

SECTION Y-Y

X

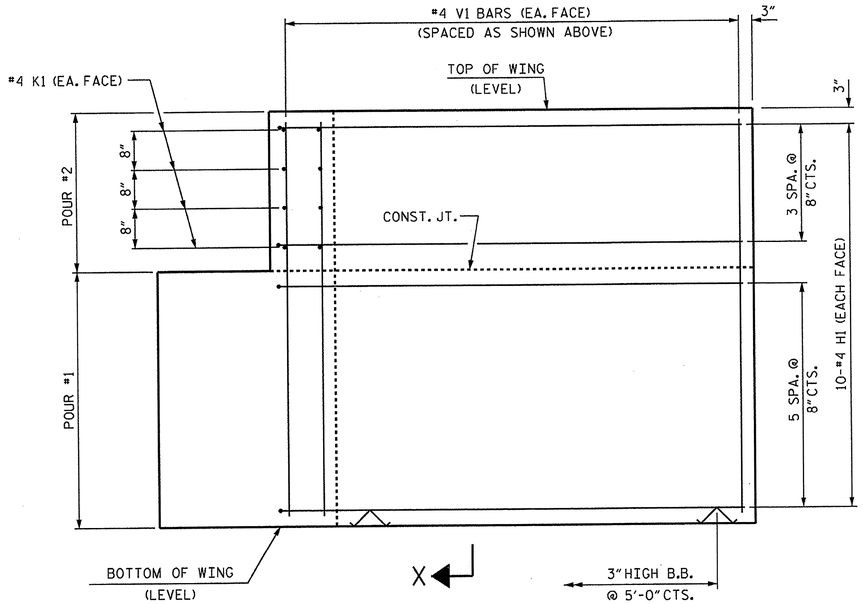

ELEVATION OF WING (W1)

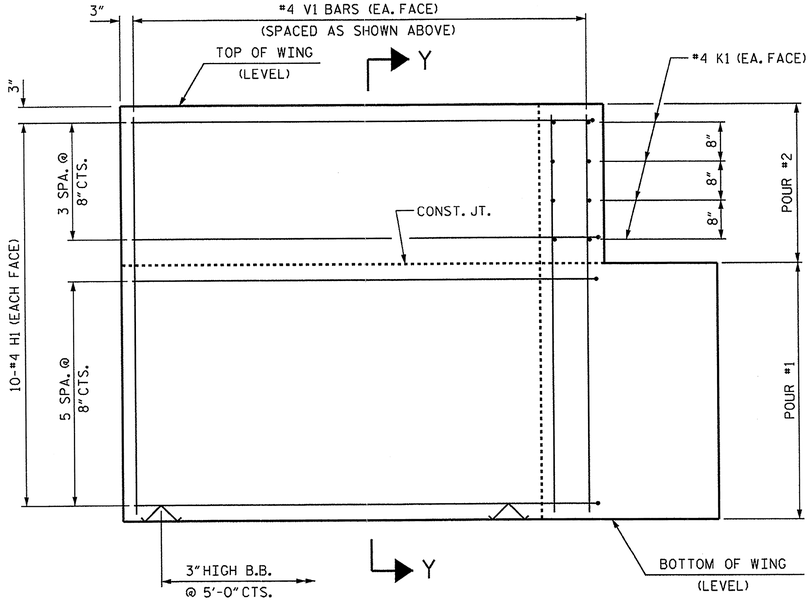

ELEVATION OF WING (W2)

WING DETAILS

PROJECT NO. 17BP.1.R.25

HERTFORD COUNTY

STATION: 13+35.00 -L-

SHEET 3 OF 4

STATE OF NORTH CAROLINA
DEPARTMENT OF TRANSPORTATION
RALEIGH

SUBSTRUCTURE

END BENT
WING DETAILS

REVISIONS						SHEET NO.
NO.	BY:	DATE:	NO.	BY:	DATE:	19
1			3			TOTAL SHEETS
2			4			31

ASSEMBLED BY : REZA KOUCHEKI	DATE : 01-31-13
CHECKED BY : A.M.LEE, PE	DATE : 02-05-13
DRAWN BY : WJH 12/11	
CHECKED BY : AAC 12/11	

08-FEB-2013 12:21
S:\DPG1\Tim\Division 1 LIBR\17BP.1.R.25\Final Plans\17BP1R25_SD_CS.dgn
tcoggins

STD. NO. EB_27_90S4

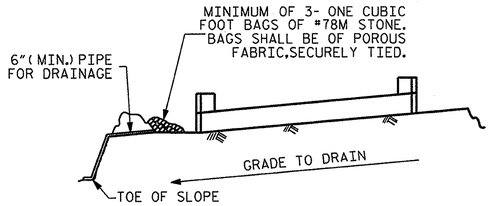

BAGGED STONE AND PIPE SHALL BE PLACED IMMEDIATELY AFTER COMPLETION OF END BENT EXCAVATION. PIPE MAY BE EITHER CONCRETE, CORRUGATED STEEL, CORRUGATED ALUMINUM ALLOY, OR CORRUGATED PLASTIC. PERFORATED PIPE WILL NOT BE ALLOWED.

BAGGED STONE SHALL REMAIN IN PLACE UNTIL THE ENGINEER DIRECTS THAT IT BE REMOVED. THE CONTRACTOR SHALL REMOVE AND DISPOSE OF SILT ACCUMULATIONS AT BAGGED STONE WHEN SO DIRECTED BY THE ENGINEER. BAGS SHALL BE REMOVED AND REPLACED WHENEVER THE ENGINEER DETERMINES THAT THEY HAVE DETERIORATED AND LOST THEIR EFFECTIVENESS.

NO SEPARATE PAYMENT WILL BE MADE FOR THIS WORK AND THE ENTIRE COST OF THIS WORK SHALL BE INCLUDED IN THE UNIT CONTRACT PRICE BID FOR THE SEVERAL PAY ITEMS.

TEMPORARY DRAINAGE AT END BENT

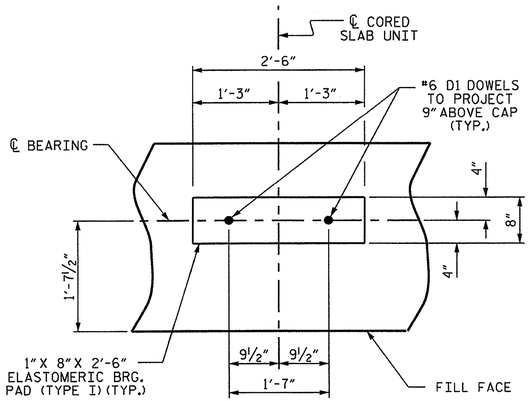

DETAIL "A"

(END BENT No. 1 SHOWN, END BENT No. 2 SIMILAR BY ROTATION)

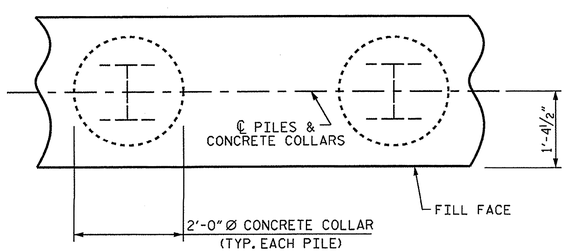

PLAN

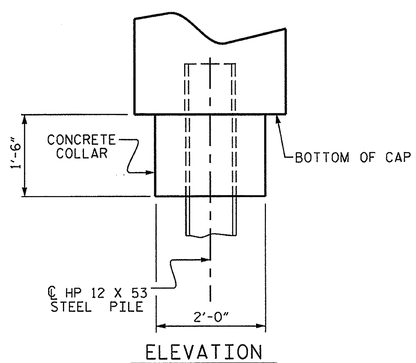

ELEVATION

CORROSION PROTECTION FOR STEEL PILES DETAIL

(END BENT No. 1 SHOWN, END BENT No. 2 SIMILAR BY ROTATION)

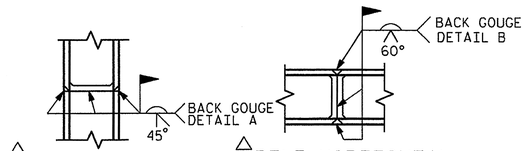

△ POSITION OF PILE DURING WELDING.

PILE SPLICE DETAILS

BAR TYPES

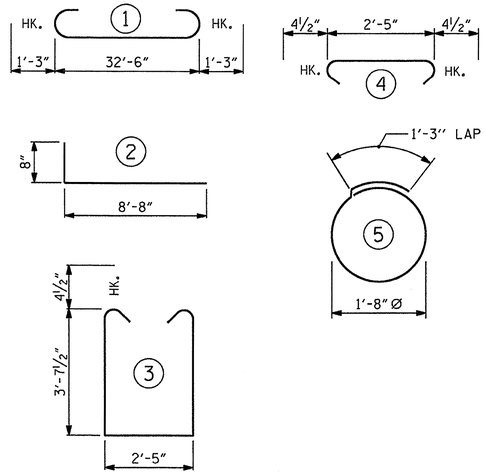

ALL BAR DIMENSIONS ARE OUT TO OUT.

END BENT No. 1	END BENT No. 2
HP 12 X 53 STEEL PILES	HP 12 X 53 STEEL PILES
NO: 5 LIN. FT.= 325	NO: 5 LIN. FT.= 350
PILE REDRIVES EA. 3	PILE REDRIVES EA. 3

BILL OF MATERIAL FOR ONE END BENT

BAR	NO.	SIZE	TYPE	LENGTH	WEIGHT
B1	8	#9	1	35'-0"	952
B2	28	#4	STR	17'-7"	329
B3	9	#4	STR	2'-5"	15
D1	18	#6	STR	1'-6"	41
H1	40	#4	2	9'-4"	249
K1	16	#4	STR	2'-11"	31
S1	42	#4	3	10'-5"	292
S2	42	#4	4	3'-2"	89
S3	20	#4	5	6'-6"	87
V1	52	#4	STR	6'-2"	214

REINFORCING STEEL (FOR ONE END BENT) 2299 LBS.

CLASS A CONCRETE BREAKDOWN (FOR ONE END BENT)

POUR #1 CAP, LOWER PART OF WINGS & COLLARS 16.7 C.Y.

POUR #2 UPPER PART OF WINGS 2.1 C.Y.

TOTAL CLASS A CONCRETE 18.8 C.Y.

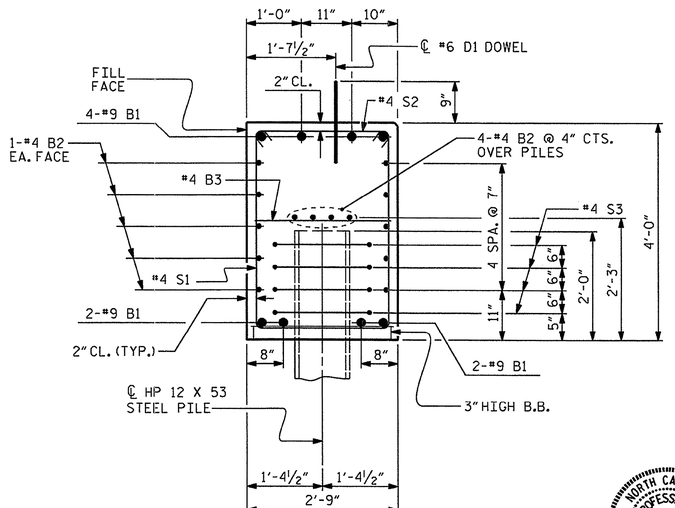

SECTION A-A

(CONCRETE COLLAR NOT SHOWN FOR CLARITY. SEE "CORROSION PROTECTION FOR STEEL PILES DETAIL.")

NORTH CAROLINA PROFESSIONAL SEAL 14045 ENGINEER TIMOTHY A. COGGINS
02/08/13

PROJECT NO. 17BP.1.R.25

HERTFORD COUNTY

STATION: 13+35.00 -L-

SHEET 4 OF 4

STATE OF NORTH CAROLINA
DEPARTMENT OF TRANSPORTATION
RALEIGH

SUBSTRUCTURE

END BENT No. 1 & 2 DETAILS

REVISIONS						SHEET NO.
NO.	BY:	DATE:	NO.	BY:	DATE:	20
1			3			TOTAL SHEETS
2			4			31

ASSEMBLED BY : REZA KOUCHEKI	DATE : 01-31-13
CHECKED BY : A.M.LEE, PE	DATE : 02-05-13
DRAWN BY : WJH 12/11	
CHECKED BY : AAC 12/11	

08-FEB-2013 12:20
S:\DPG\TIm\Division 1 LIBR\17BP.1.R.25\Final Plans\17BP1R25_SD_CS.dgn
tcoggins

STD. NO. EB_27_90S4

NOTES

STIRRUPS IN CAP MAY BE SHIFTED AS NECESSARY TO CLEAR DOWELS.

THE LATERAL GUIDES ARE NOT TO BE POURED UNTIL AFTER THE CORED SLAB UNITS ARE IN PLACE.

★ INVERT ALTERNATE STIRRUPS.

THE CONTRACTOR HAS THE OPTION TO OMIT THE LATERAL GUIDE IF APPROVED BY THE ENGINEER.

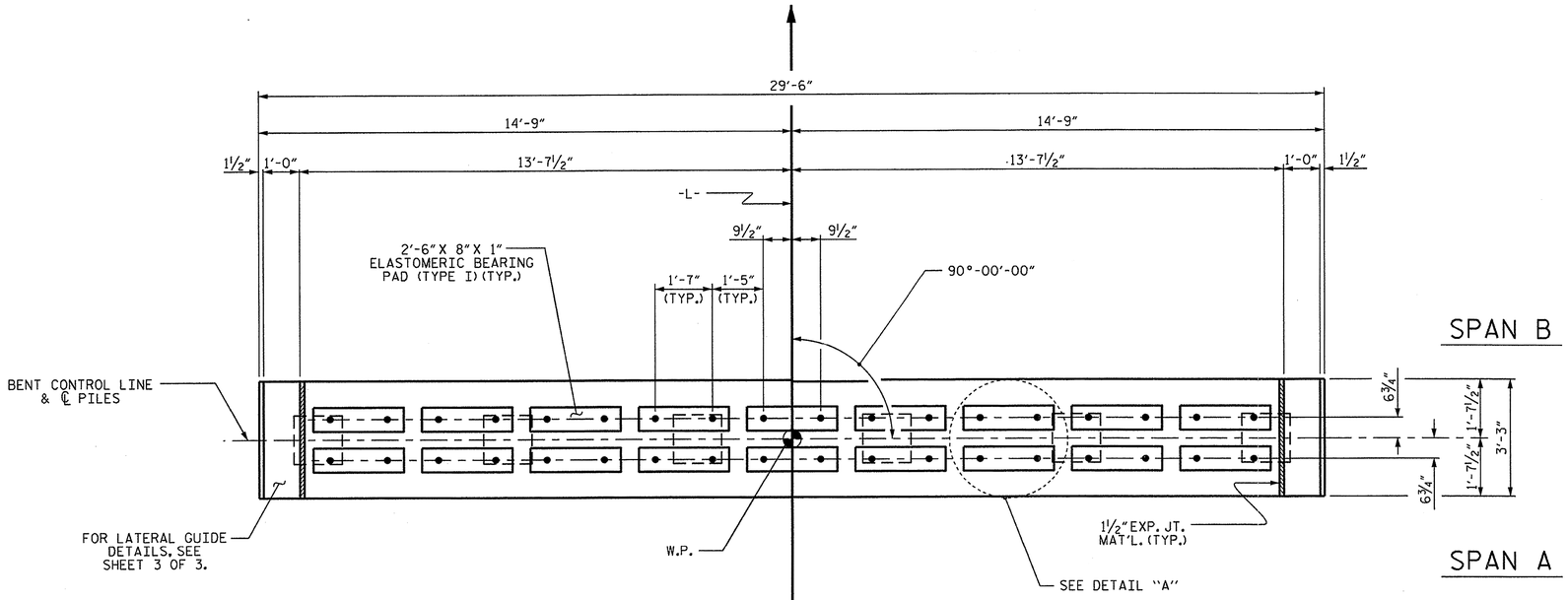

PLAN

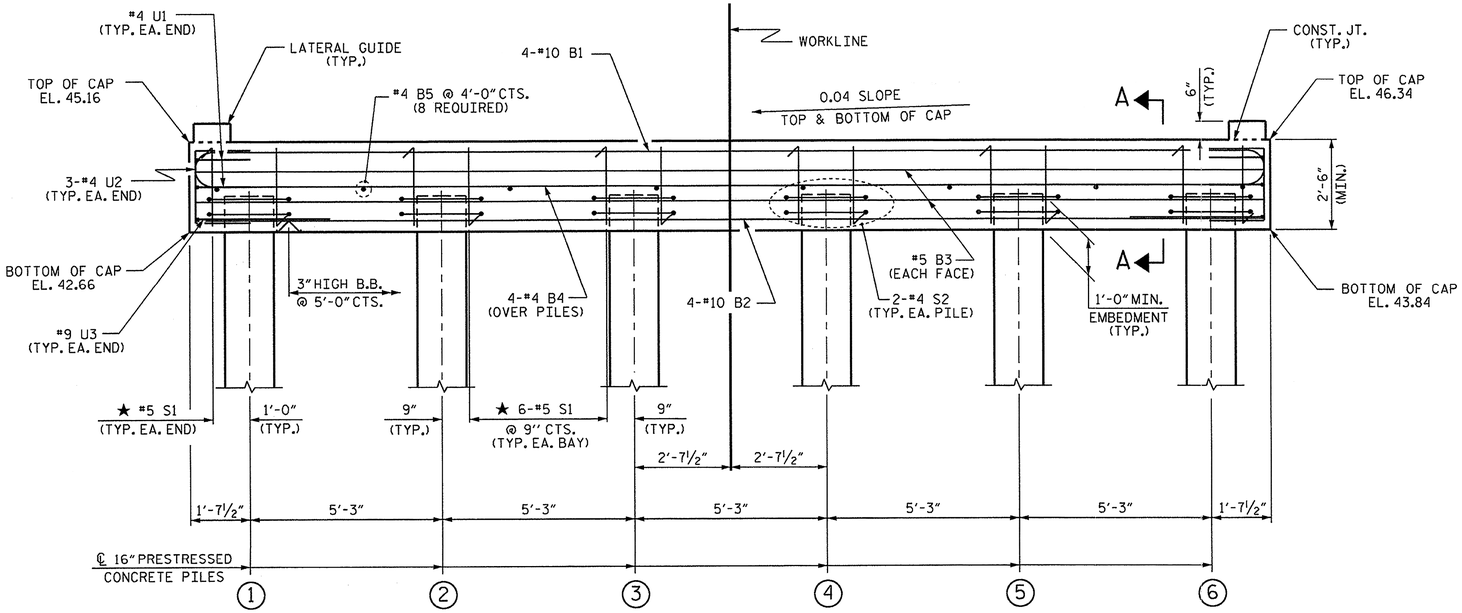

ELEVATION

FOR SECTION A-A, SEE SHEET 3 OF 3

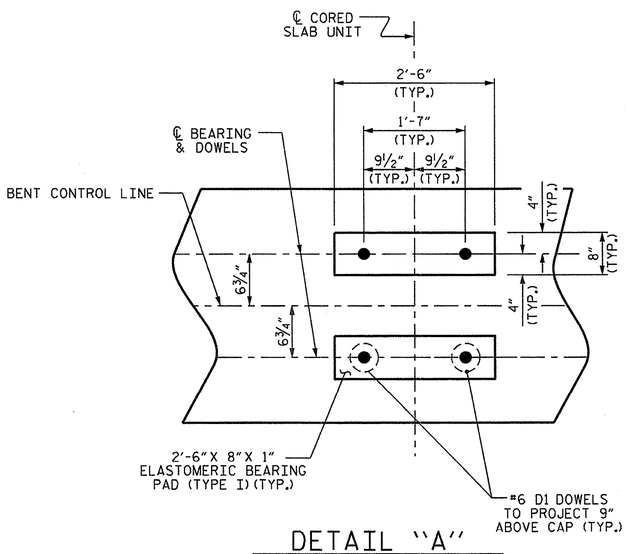

DETAIL "A"

(DIMENSIONS ARE TYPICAL EACH BEARING)

TOP OF PILE ELEVATIONS	
1	43.75
2	43.96
3	44.17
4	44.38
5	44.59
6	44.80

PROJECT NO. 17BP.1.R.25

HERTFORD COUNTY

STATION: 13+35.00 -L-

SHEET 1 OF 3

STATE OF NORTH CAROLINA
DEPARTMENT OF TRANSPORTATION
RALEIGH

SUBSTRUCTURE

BENT No. 1

REVISIONS						SHEET NO.
NO.	BY:	DATE:	NO.	BY:	DATE:	21
1			3			TOTAL SHEETS
2			4			31

NORTH CAROLINA PROFESSIONAL SEAL 14045 ENGINEER TIMOTHY M. COGGINS
02/08/13

ASSEMBLED BY : REZA KOUCHEKI DATE : 01-31-13
CHECKED BY : A.M.LEE, PE DATE : 02-05-13

DRAWN BY : DGE 05/10
CHECKED BY : MKT 05/10

08-FEB-2013 12:20
S:\DPG1\Tim\Division 1 LIBR\17BP.1.R.25\Final Plans\17BP1R25_SD_CS.dgn
tcoggins

STD.NO. 16"PS_BT_27_90S_<60'

NOTES

STIRRUPS IN CAP MAY BE SHIFTED AS NECESSARY TO CLEAR DOWELS.

THE LATERAL GUIDES ARE NOT TO BE POURED UNTIL AFTER THE CORED SLAB UNITS ARE IN PLACE.

★ INVERT ALTERNATE STIRRUPS.

THE CONTRACTOR HAS THE OPTION TO OMIT THE LATERAL GUIDE IF APPROVED BY THE ENGINEER.

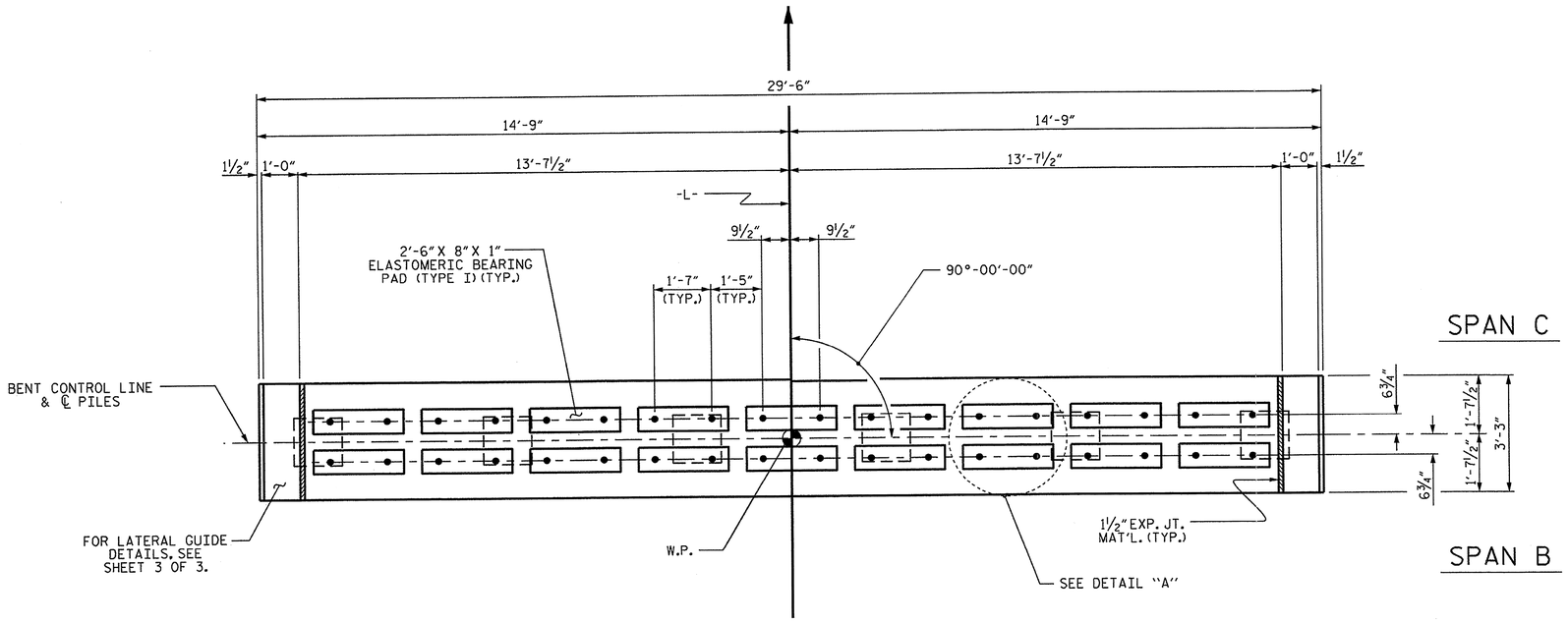

PLAN

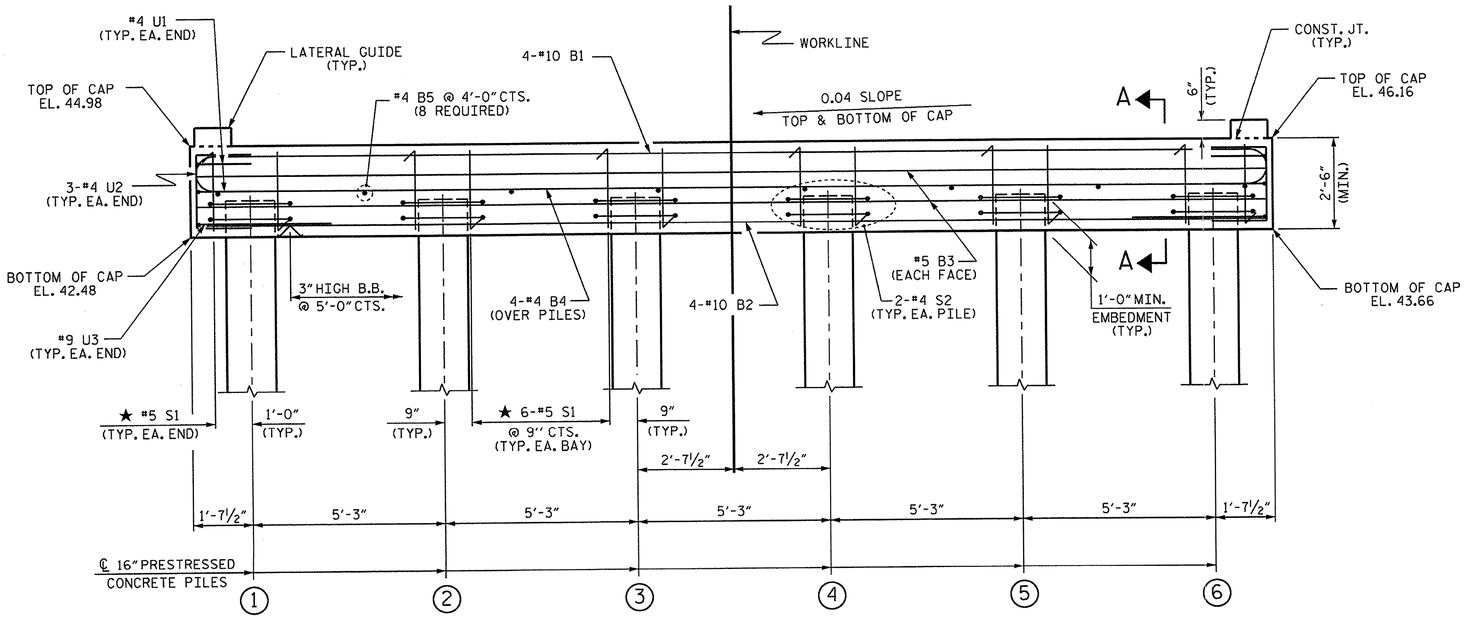

ELEVATION

FOR SECTION A-A, SEE SHEET 3 OF 3

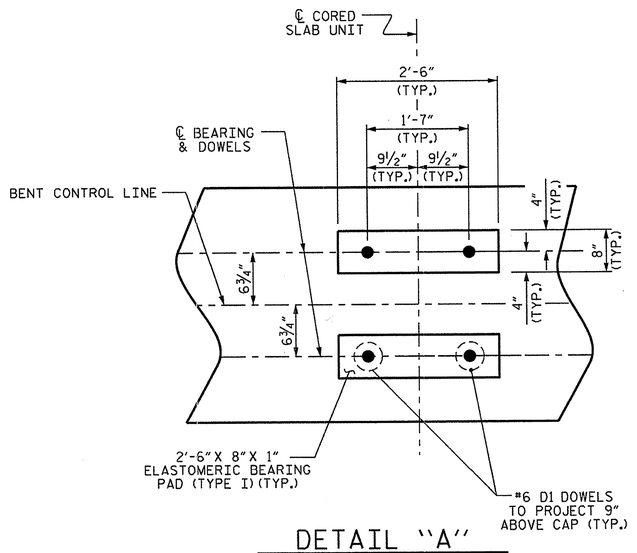

DETAIL "A"

(DIMENSIONS ARE TYPICAL EACH BEARING)

TOP OF PILE ELEVATIONS	
1	43.57
2	43.78
3	43.99
4	44.20
5	44.41
6	44.62

PROJECT NO. 17BP.1.R.25

HERTFORD COUNTY

STATION: 13+35.00 -L-

SHEET 2 OF 3

STATE OF NORTH CAROLINA
DEPARTMENT OF TRANSPORTATION
RALEIGH

SUBSTRUCTURE

BENT No. 2

NORTH CAROLINA PROFESSIONAL SEAL 14045 ENGINEER TIMOTHY M. COGGINS
02/08/13

REVISIONS						SHEET NO.
NO.	BY:	DATE:	NO.	BY:	DATE:	22
1			3			TOTAL SHEETS
2			4			31

ASSEMBLED BY : REZA KOUCHEKI DATE : 01-31-13
CHECKED BY : A.M.LEE, PE DATE : 02-05-13

DRAWN BY : DGE 05/10
CHECKED BY : MKT 05/10

08-FEB-2013 12:19
S:\DPGI\Tm\Division 1 LIBR\17BP.1.R.25\Final Plans\17BP1R25_SD_CS.dgn
tcoggins

STD.NO. 16"PS_BT_27_90S_<60'

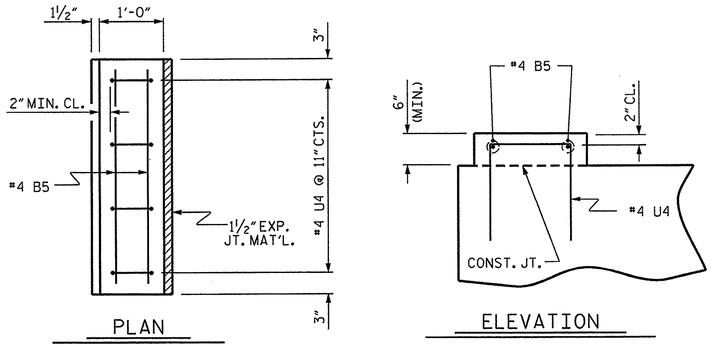

LATERAL GUIDE DETAILS

(LEFT LATERAL GUIDE SHOWN, RIGHT SIDE SIMILAR)

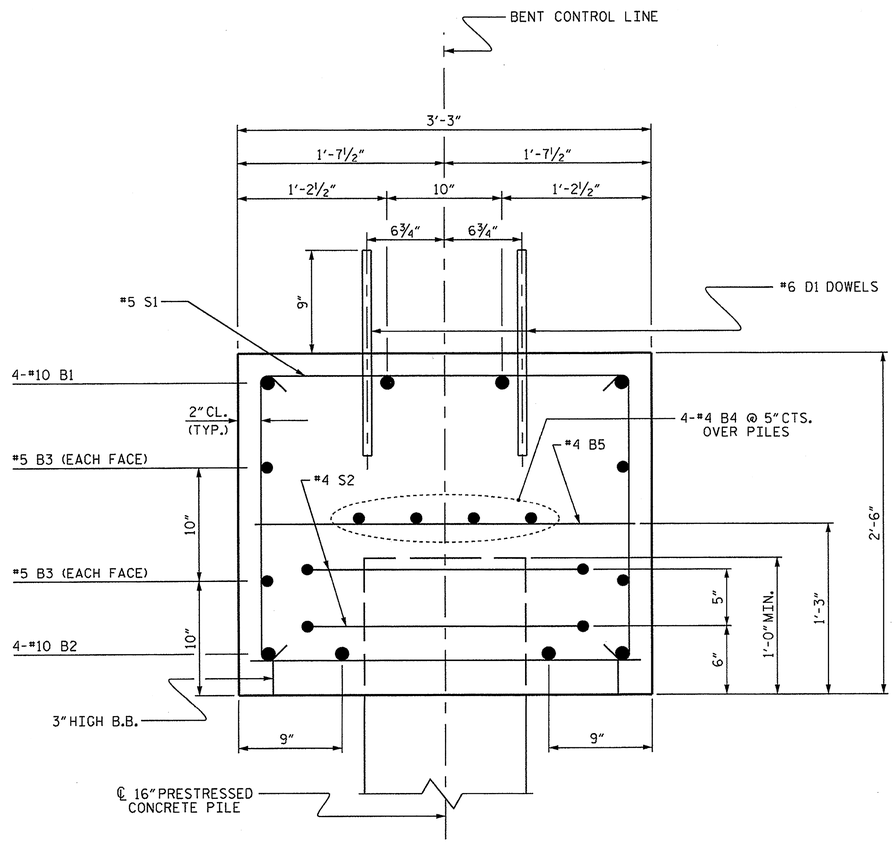

SECTION A-A

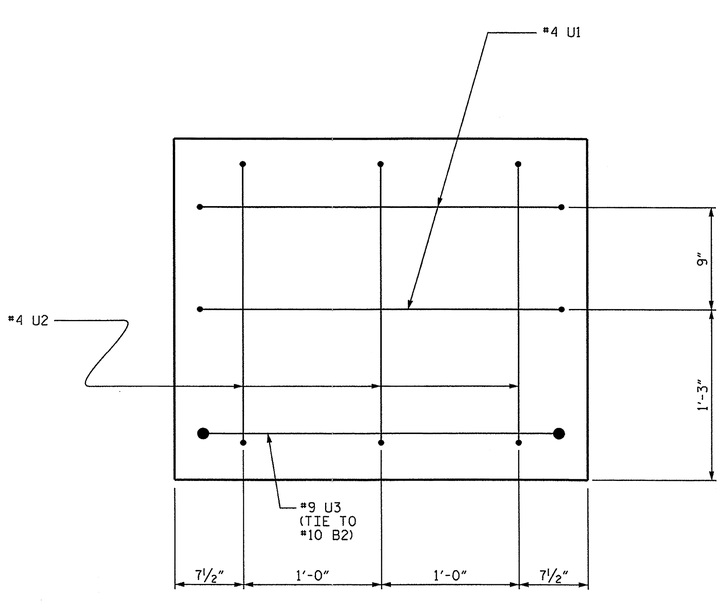

END OF CAP VIEW

(TYPICAL BOTH ENDS)

BAR TYPES

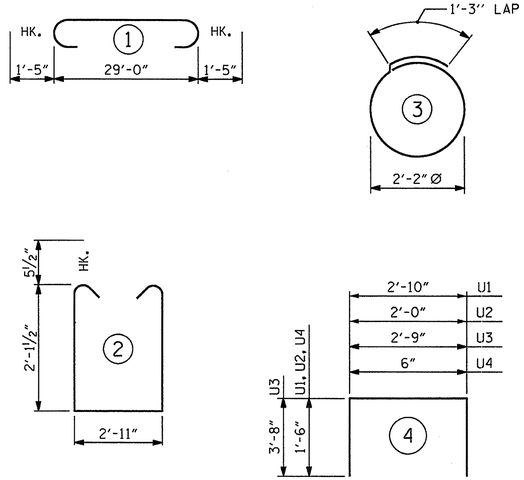

ALL BAR DIMENSIONS ARE OUT TO OUT.

BILL OF MATERIAL

FOR ONE BENT

BAR	NO.	SIZE	TYPE	LENGTH	WEIGHT
B1	4	#10	1	31'-10"	548
B2	4	#10	STR	29'-2"	502
B3	4	#5	STR	29'-2"	122
B4	4	#4	STR	29'-2"	78
B5	12	#4	STR	2'-11"	23
D1	36	#6	STR	1'-6"	81
S1	32	#5	2	8'-1"	270
S2	12	#4	3	8'-1"	65
U1	4	#4	4	5'-10"	16
U2	6	#4	4	5'-0"	20
U3	2	#9	4	10'-1"	69
U4	8	#4	4	3'-6"	19

REINFORCING STEEL (FOR ONE BENT) 1813 LBS

CLASS A CONCRETE BREAKDOWN (FOR ONE BENT)

POUR #1 (CAP)	▲ 8.5 C.Y.
POUR #2 (LATERAL GUIDES)	0.1 C.Y.
TOTAL CLASS A CONCRETE	8.6 C.Y.

16" PRESTRESSED CONCRETE PILES

(BENT NO.1)

No. 6 LIN. FT. 390

(BENT NO.2)

No. 6 LIN. FT. 420

PILE REDRIVES (FOR ONE BENT) EA. 3

▲ CONCRETE DISPLACED BY THE 16" PRESTRESSED CONCRETE PILES HAS BEEN DEDUCTED FROM THE CONCRETE QUANTITY.

PROJECT NO. 17BP.1.R.25

HERTFORD COUNTY

STATION: 13+35.00 -L-

SHEET 3 OF 3

STATE OF NORTH CAROLINA
DEPARTMENT OF TRANSPORTATION
RALEIGH

SUBSTRUCTURE

BENTS 1 & 2

REVISIONS						SHEET NO.
NO.	BY:	DATE:	NO.	BY:	DATE:	23
1			3			TOTAL SHEETS
2			4			31

NORTH CAROLINA PROFESSIONAL SEAL 14045 ENGINEER TIMOTHY A. PEGGINS
02/08/13

DRAWN BY : REZA KOUCHEKI	DATE : 01-31-13
CHECKED BY : A.M.LEE, PE	DATE : 02-05-13
DRAWN BY : DGE 05/10	
CHECKED BY : MKT 05/10	

08-FEB-2013 12:19
S:\DPG\TTim\Division 1 LIBR\17BP.1.R.25\FinalPlans\17BP1R25_SD_CS.dgn
tcoggins

STD.NO. 16"PS_BT_27_90S_<60'

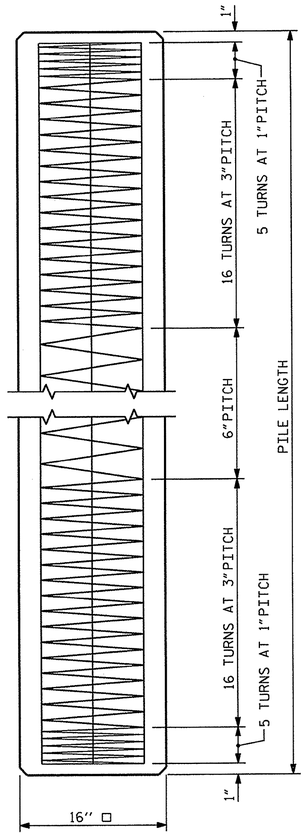

ELEVATION

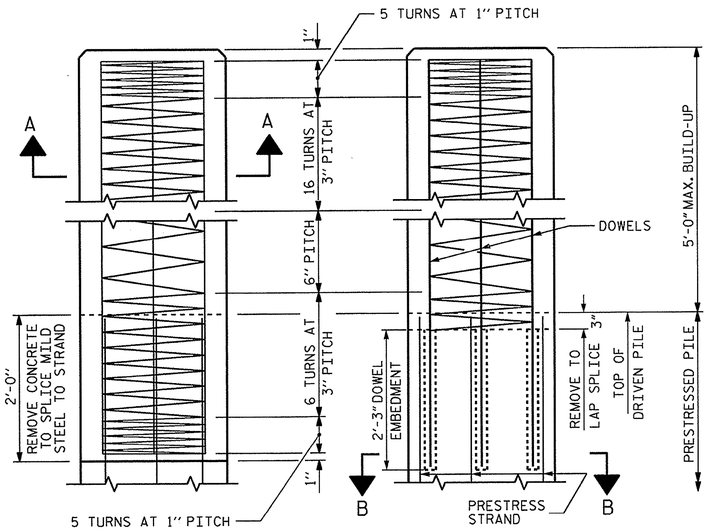

BUILD-UP AND SPIRAL REINFORCING

OPTIONAL BUILD-UP WITH DOWELS

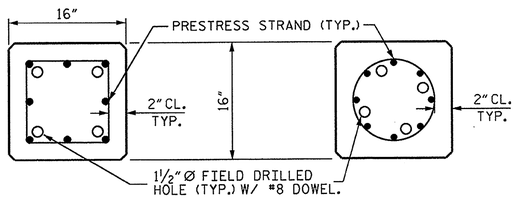

SECTION "B-B"

(AT THE CONTRACTOR'S OPTION, PILE BUILD-UP MAY BE CONSTRUCTED WITH DOWELS.)

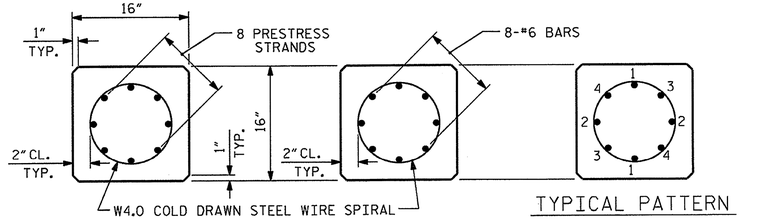

TYPICAL SECTION — SECTION "A-A" — TYPICAL PATTERN FOR BURNING STRANDS

½" OR 0.6" Ø GRADE 270 L.R. PRESTRESS STRANDS

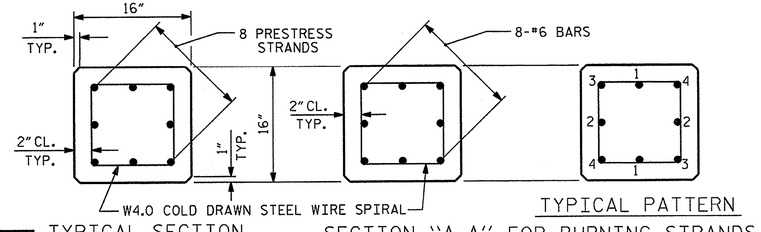

TYPICAL SECTION — SECTION "A-A" — TYPICAL PATTERN FOR BURNING STRANDS

½" OR 0.6" Ø GRADE 270 L.R. PRESTRESS STRANDS

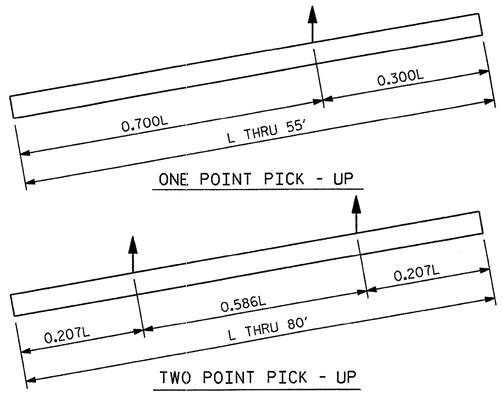

PICK - UP POINTS

QUANTITIES FOR ONE 16" PRESTRESSED PILE

LENGTH	CONCRETE CU. YDS.	PILE WT. TONS	ONE POINT PICK-UP 0.300L	ONE POINT PICK-UP 0.700L	TWO POINT PICK-UP 0.207L	TWO POINT PICK-UP 0.586L
25'-0"	1.63	3.31	7'-6"	17'-6"	5'-2"	14'-8"
30'-0"	1.96	3.97	9'-0"	21'-0"	6'-2½"	17'-7"
35'-0"	2.29	4.63	10'-6"	24'-6"	7'-3"	20'-6"
40'-0"	2.61	5.29	12'-0"	28'-0"	8'-3½"	23'-5"
45'-0"	2.94	5.95	13'-6"	31'-6"	9'-4"	26'-4"
50'-0"	3.27	6.61	15'-0"	35'-0"	10'-4"	29'-4"
55'-0"	3.59	7.28	16'-6"	38'-6"	11'-4½"	32'-3"
60'-0"	3.92	7.94			12'-5"	35'-2"
65'-0"	4.25	8.60			13'-5½"	38'-1"
70'-0"	4.57	9.26			14'-6"	41'-0"
75'-0"	4.90	9.92			15'-6½"	43'-11"
80'-0"	5.23	10.58			16'-7"	46'-10"

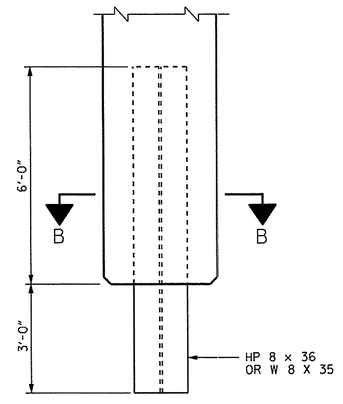

ELEVATION

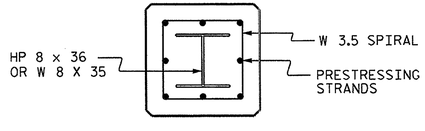

SECTION B-B

PILE TIP DETAILS

FOR 16" SQUARE PRESTRESSED CONCRETE PILE

NOTES

PRESTRESSED CONCRETE STRENGTH : f'c= 7,500 PSI

BUILD-UP CONCRETE STRENGTH : f'c= 7,500 PSI

STRAND DATA:

SIZE	GRADE	AREA	ULTIMATE STRENGTH	APPLIED PRESTRESS FORCE
½"	270 L.R.	0.153	41,300# PER STRAND	30,980# PER STRAND
0.6"	270 L.R.	0.217	58,600# PER STRAND	43,940# PER STRAND

ALL PRESTRESSING STRANDS SHALL BE 7-WIRE LOW-RELAXATION GRADE 270 STRANDS CONFORMING TO AASHTO M203. STRAND SAMPLING REQUIREMENTS SHALL BE IN ACCORDANCE WITH THE STANDARD SPECIFICATIONS.

AT THE CONTRACTOR'S OPTION, ½" OR 0.6" STRANDS MAY BE USED IN EITHER STRAND CONFIGURATION SHOWN IN THE TYPICAL SECTION DETAIL. MIXING OF STRAND SIZE IS NOT ALLOWED.

THE SLIP-FORM METHOD OF CASTING PILES WILL NOT BE PERMITTED.

TRANSFER THE LOAD FROM THE ANCHORAGES TO THE PILE AFTER THE CONCRETE HAS ATTAINED A MINIMUM COMPRESSIVE STRENGTH OF 4,000 PSI.

IF STRAND STRESS IS RELIEVED BY BURNING, THE STRANDS SHALL BE BURNED IN OPPOSITE PAIRS AS INDICATED IN THE TYPICAL PATTERN SHOWN. FOR ANY NUMBER OF STRANDS, BURN IN OPPOSITE PAIRS AND SYMMETRICALLY ABOUT BOTH THE VERTICAL AND HORIZONTAL AXES. STRANDS 1-1 SHALL BE BURNED BEFORE 2-2, ETC. NOT MORE THAN 4 STRANDS, SAY 3-3 AND 4-4, MAY BE BURNED AT ANY ONE SECTION BEFORE THESE SAME PAIRS OF STRANDS ARE BURNED AT BOTH ENDS OF THE BED AND BETWEEN EACH PAIR OF PILES IN THE BED.

PROPOSED DEVICES FOR LIFTING PILES, RECESS DETAILS, AND PATCHING MATERIAL SHALL BE DETAILED IN SHOP DRAWINGS. AFTER ATTACHMENTS HAVE BEEN REMOVED, OPENINGS SHALL BE REPAIRED SUCH THAT THE APPEARANCE OF THE PILE IS UNIFORM.

WHERE CAST-IN-PLACE LIFTING DEVICES ARE NOT USED, PICK-UP POINTS ARE TO BE INDICATED WITH A 2" WIDE BLACK MARK.

DRIVE PILES USING A METHOD APPROVED BY THE ENGINEER, WHEREBY THE HEAD OF THE PILE IS NOT DAMAGED.

DRIVING OF THE BUILT-UP PILE WILL NOT BE PERMITTED UNTIL THE CONCRETE HAS REACHED A COMPRESSIVE STRENGTH OF 5,000 PSI AND UNTIL A PERIOD OF SEVEN DAYS HAS ELAPSED SINCE CASTING OF THE BUILD-UP.

DOWEL INSTALLATION FOR OPTIONAL BUILD-UP

GROUT COMPRESSIVE STRENGTH: f'c= 5,000 PSI

BEFORE DRILLING DOWEL HOLES, REMOVE THE UPPER 3" OF CONCRETE FROM THE TOP OF THE PILE WITHOUT DAMAGE TO THE REINFORCING STEEL. THE REMOVAL PLANE SHOULD BE NORMAL TO THE EDGE OF THE PILE.

DOWEL HOLES SHALL BE POSITIONED TO MAINTAIN ½" CLEAR TO ALL EXISTING PRESTRESSING STRANDS IN THE CONCRETE PILE.

FIELD DRILLED HOLES SHALL BE CLEAN AND FREE OF ANY OBSTRUCTIONS BEFORE GROUTING OF DOWELS. DOWEL BARS SHALL BE INSTALLED AND GROUTED WITH AN APPROVED NON-SHRINK GROUT.

THE SPIRAL REINFORCING IN ALL BUILD-UPS SHALL BE W4.0 COLD DRAWN WIRE WHICH SHALL BE SECURED TO THE LONGITUDINAL REINFORCEMENT TO MAINTAIN PITCH.

THE SPIRAL REINFORCING IN THE BUILD-UP AND THE PRESTRESSED CONCRETE PILE SHALL BE SPLICED BY OVERLAPPING A MIN. OF ONE TURN.

PROJECT NO. 17BP.1.R.25

HERTFORD COUNTY

STATION: 13+35.00 -L-

STATE OF NORTH CAROLINA
DEPARTMENT OF TRANSPORTATION
RALEIGH

STANDARD

16" PRESTRESSED CONCRETE PILE

NORTH CAROLINA PROFESSIONAL SEAL 14045 ENGINEER TIMOTHY L. COGGINS
02/08/13

REVISIONS						SHEET NO.
NO.	BY:	DATE:	NO.	BY:	DATE:	24
1			3			TOTAL SHEETS
2			4			31

ASSEMBLED BY : REZA KOUCHEKI	DATE : 02-05-13	
CHECKED BY : A.M.LEE, PE	DATE : 02-05-13	
DRAWN BY : RH 9/98	REV. 5/1/06R	TLA/GM
CHECKED BY : LES 10/98	REV. 11/30/10	WMC/GM
	REV. 10/1/11	MAA/GM

08-FEB-2013 12:19
S:\DPG\Tim\Division 1 LIBR\17BP.1.R.25\Final Plans\17BP1R25_SD_CS.dgn
tcoggins

STD. NO. PCP2

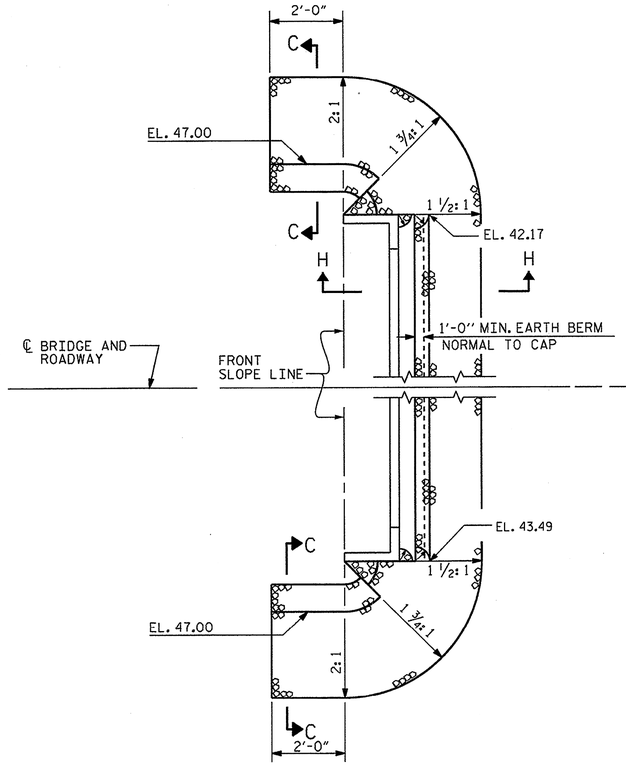

END BENT 1

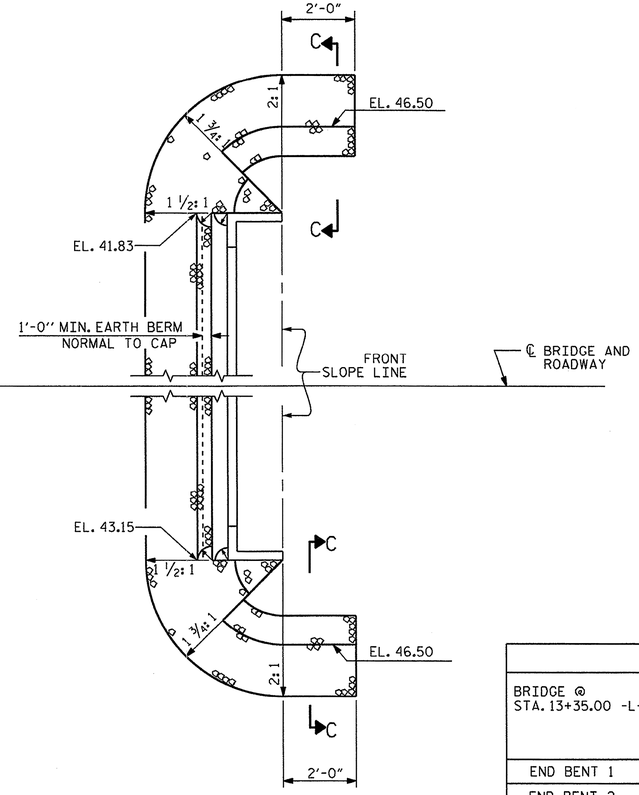

END BENT 2

NOTES :

FOR BERM WIDTH DIMENSIONS, SEE GENERAL DRAWING.

ESTIMATED QUANTITIES

BRIDGE @ STA. 13+35.00 -L-	RIP RAP CLASS II (2'-0" THICK)	GEOTEXTILE FOR DRAINAGE
	TONS	SQUARE YARDS
END BENT 1	96	107
END BENT 2	96	106

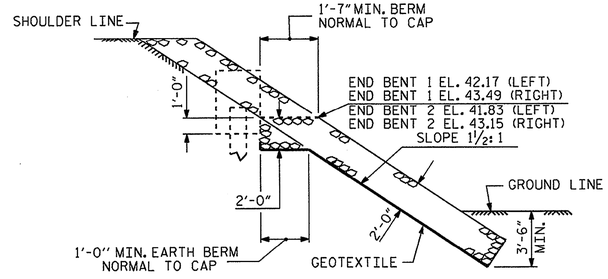

SECTION H-H

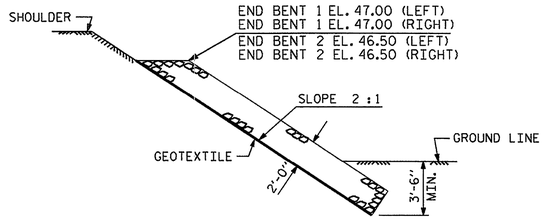

SECTION C-C

PROJECT NO. 17BP.1.R.25

HERTFORD COUNTY

STATION: 13+35.00 -L-

STATE OF NORTH CAROLINA
DEPARTMENT OF TRANSPORTATION
RALEIGH

STANDARD

RIP RAP DETAILS

NORTH CAROLINA PROFESSIONAL SEAL 14045 ENGINEER TIMOTHY A. COGGINS

02/08/13

ASSEMBLED BY : REZA KOUCHEKI	DATE : 02-05-13
CHECKED BY : A.M.LEE, PE	DATE : 02-05-13
DRAWN BY : REK 1/84	REV. 5/1/06R TLA/GM
CHECKED BY : RDU 1/84	REV. 10/1/11 MAA/GM
	REV. 12/21/11 MAA/GM

REVISIONS						SHEET NO.
NO.	BY:	DATE:	NO.	BY:	DATE:	25
1			3			TOTAL SHEETS
2			4			31

08-FEB-2013 12:18
S:\DPG\Tim\Division 1 LIBR\17BP.1.R.25\Final Plans\17BPIR25_SD_CS.dgn
tcoggins

STD. NO. RR1

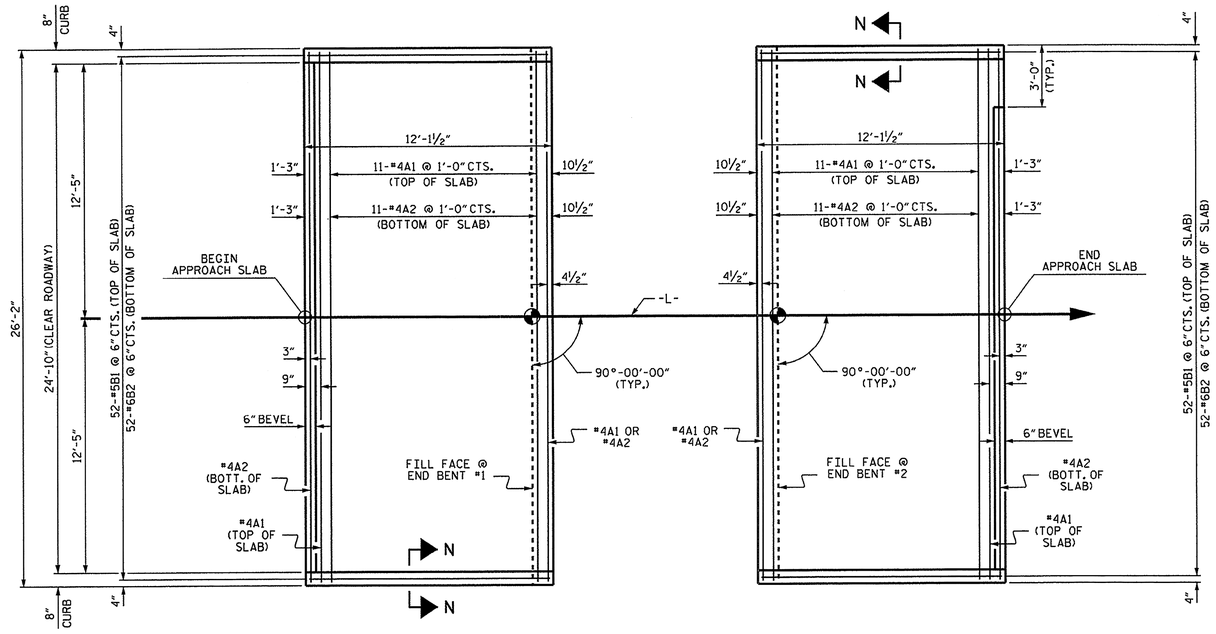

PLAN @ END BENT #1 PLAN @ END BENT #2

DIMENSIONS SHOWN ARE TYPICAL FOR BOTH APPROACH SLABS

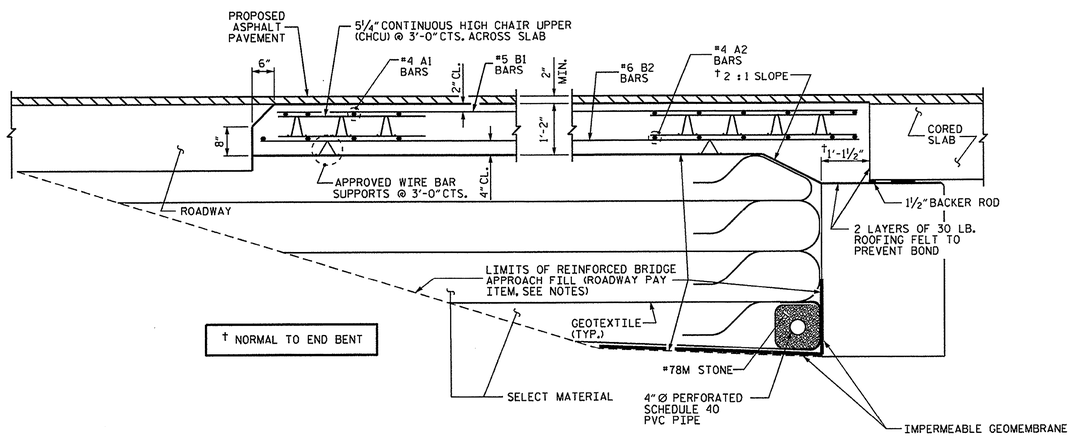

SECTION THRU SLAB

NOTES

FOR REINFORCED BRIDGE APPROACH FILL INCLUDING GEOTEXTILE, IMPERMEABLE GEOMEMBRANE, 4" Ø DRAINAGE PIPE, #78M STONE, AND SELECT MATERIAL. SEE ROADWAY PLANS.

AREA BETWEEN THE WINGWALL AND APPROACH SLAB SHALL BE GRADED TO DRAIN THE WATER AWAY FROM THE FILL FACE OF THE BRIDGE AND SHALL BE PAVED. SEE ROADWAY PLANS.

APPROACH SLAB GROOVING IS NOT REQUIRED.

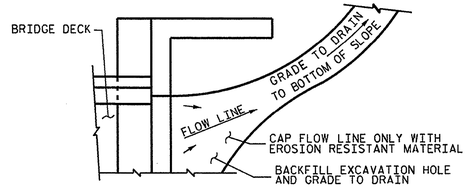

NOTE: IF THE APPROACH SLAB IS NOT CONSTRUCTED IMMEDIATELY AFTER THE BACKFILLING OF THE END BENT EXCAVATION, GRADE TO DRAIN TO THE BOTTOM OF THE SLOPE AND PROVIDE EROSION RESISTANT MATERIAL, SUCH AS FIBERGLASS ROVING OR AS DIRECTED BY THE ENGINEER TO PREVENT SOIL EROSION AND TO PROTECT THE AREA ADJACENT TO THE STRUCTURE. THE CONTRACTOR WILL BE REQUIRED TO REMOVE THESE MATERIALS PRIOR TO CONSTRUCTION OF THE APPROACH SLAB.

TEMPORARY DRAINAGE DETAIL

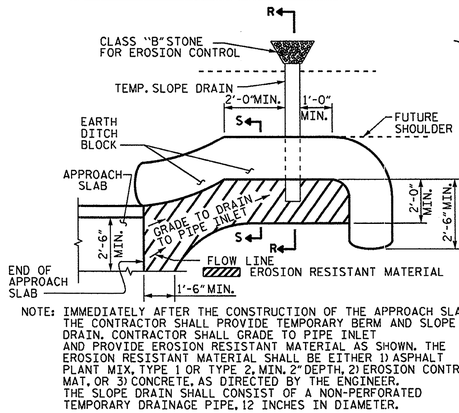

NOTE: IMMEDIATELY AFTER THE CONSTRUCTION OF THE APPROACH SLAB, THE CONTRACTOR SHALL PROVIDE TEMPORARY BERM AND SLOPE DRAIN. CONTRACTOR SHALL GRADE TO PIPE INLET AND PROVIDE EROSION RESISTANT MATERIAL AS SHOWN. THE EROSION RESISTANT MATERIAL SHALL BE EITHER 1) ASPHALT PLANT MIX, TYPE 1 OR TYPE 2, MIN. 2" DEPTH, 2) EROSION CONTROL MAT, OR 3) CONCRETE, AS DIRECTED BY THE ENGINEER. THE SLOPE DRAIN SHALL CONSIST OF A NON-PERFORATED TEMPORARY DRAINAGE PIPE, 12 INCHES IN DIAMETER.

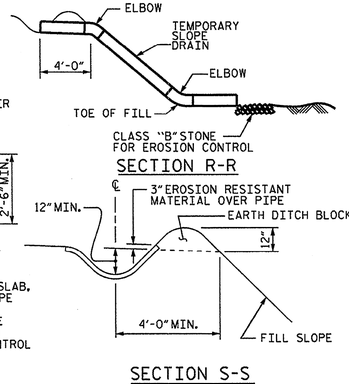

SECTION R-R

SECTION S-S

PLAN VIEW

TEMPORARY BERM AND SLOPE DRAIN DETAILS

(TO BE USED WHEN SHOULDER BERM GUTTER IS REQUIRED)

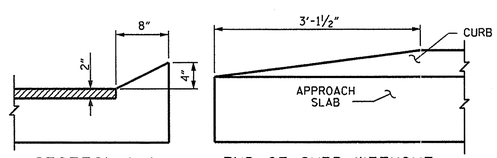

SECTION N-N

END OF CURB WITHOUT SHOULDER BERM GUTTER

CURB DETAILS

SPLICE LENGTHS		
BAR SIZE	EPOXY COATED	UNCOATED
#4	2'-0"	1'-9"
#5	2'-6"	2'-2"
#6	3'-10"	2'-7"

NORTH CAROLINA PROFESSIONAL SEAL 14045 ENGINEER TIMOTHY C. COGGINS
02/06/13

BILL OF MATERIAL

APPROACH SLAB AT EB #1

BAR	NO.	SIZE	TYPE	LENGTH	WEIGHT
* A1	13	#4	STR	25'-10"	224
A2	13	#4	STR	25'-10"	224
* B1	52	#5	STR	11'-2"	606
B2	52	#6	STR	11'-8"	911
REINFORCING STEEL				LBS.	1135
* EPOXY COATED REINFORCING STEEL				LBS.	830
CLASS AA CONCRETE				C.Y.	15.2

APPROACH SLAB AT EB #2

BAR	NO.	SIZE	TYPE	LENGTH	WEIGHT
* A1	13	#4	STR	25'-10"	224
A2	13	#4	STR	25'-10"	224
* B1	52	#5	STR	11'-2"	606
B2	52	#6	STR	11'-8"	911
REINFORCING STEEL				LBS.	1135
* EPOXY COATED REINFORCING STEEL				LBS.	830
CLASS AA CONCRETE				C.Y.	15.2

PROJECT NO. 17BP.1.R.25

HERTFORD COUNTY

STATION: 13+35.00 -L-

STATE OF NORTH CAROLINA
DEPARTMENT OF TRANSPORTATION
RALEIGH

STANDARD BRIDGE APPROACH SLAB FOR PRESTRESSED CONCRETE CORED SLAB UNIT (SUB-REGIONAL TIER) 90° SKEW

REVISIONS						SHEET NO.
NO.	BY:	DATE:	NO.	BY:	DATE:	26
1			3			TOTAL SHEETS
2			4			31

ASSEMBLED BY : REZA KOUCHEKI DATE : 02-05-13
CHECKED BY : A.M.LEE, PE DATE : 02-05-13
DRAWN BY : SHS/MAA 5-09 REV. 12-11 MAA/AAC
CHECKED BY : BCH 5-09

08-FEB-2013 12:18
S:\DPG\Tfm\Division 1 LIBR\17BP.1.R.25\Final Plans\17BP1R25_SD_CS.dgn
tcoggins

STD. NO. BAS_27_90S

WBS # 17BP.1.R.25

CONTRACT #:

DIVISION OF HIGHWAYS
STATE OF NORTH CAROLINA

SOIL STABILIZATION TIMEFRAMES

SITE DESCRIPTION	STABILIZATION TIME	TIMEFRAME EXCEPTIONS
PERIMETER DIKES, SWALES, DITCHES AND SLOPES	7 DAYS	NONE
HIGH QUALITY WATER (HQW) ZONES	7 DAYS	NONE
SLOPES STEEPER THAN 3:1	7 DAYS	IF SLOPES ARE 10' OR LESS IN LENGTH AND ARE NOT STEEPER THAN 2:1, 14 DAYS ARE ALLOWED.
SLOPES 3:1 OR FLATTER	14 DAYS	7 DAYS FOR SLOPES GREATER THAN 50' IN LENGTH.
ALL OTHER AREAS WITH SLOPES FLATTER THAN 4:1	14 DAYS	NONE, EXCEPT FOR PERIMETERS AND HQW ZONES.

PROJECT: 17BP.1.R.25

HERTFORD COUNTY

STATION: 13+35.00 -L-

REPLACES BRIDGE NO. 450057

STATE OF NORTH CAROLINA
DEPARTMENT OF TRANSPORTATION
RALEIGH

EROSION CONTROL PLAN

BRIDGE ON SR 1150 OVER
CUTAWHISKIE SWAMP

24'-10" CLEAR ROADWAY - 90° SKEW

REVISIONS						SHEET NO.
NO.	BY:	DATE:	NO.	BY:	DATE:	EC-1
1			1			TOTAL SHEETS
2			2			31

EROSION CONTROL PLAN

WBS # 17BP.1.R.25

CONTRACT #:

EXIST BRIDGE NO. 450057
19'-0" CLEAR ROADWAY
TIMBER FLOOR ON
TIMBER JOISTS

EXISTING UTILITIES TO BE RELOCATED BY OTHERS

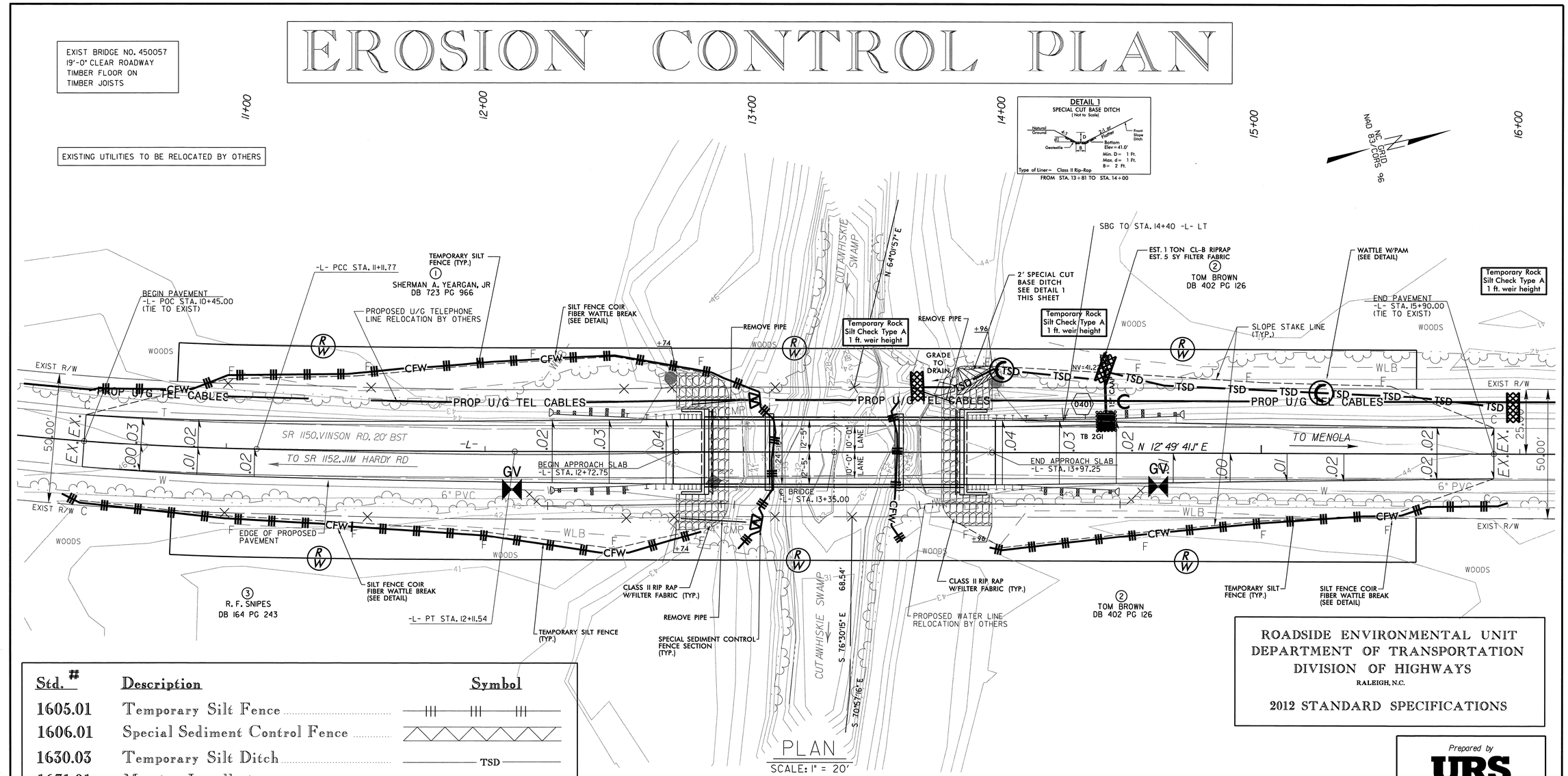

Std. #	Description	Symbol
1605.01	Temporary Silt Fence	
1606.01	Special Sediment Control Fence	
1630.03	Temporary Silt Ditch	TSD
1631.01	Matting Installation	
1632.03	Rock Inlet Sediment Trap Type C	C
1633.01	Temporary Rock Silt Check Type-A	
--	Silt Fence Coir Fiber Wattle Break	-CFW-
--	Wattle with Polyacrylamide (PAM)	

INSTALL MATTING FOR EROSION CONTROL IN THE PROPOSED DITCH LINE.

Place Matting for Erosion Control on Slopes Adjacent to Permitted Wetlands as Work Allows.

METHOD II MODIFIED CLEARING

MATTING FOR EROSION CONTROL

CONST SHEET NO.	LINE	FROM STATION	TO STATION	SIDE	ESTIMATE (SY)
				SUBTOTAL	0
MISCELLANEOUS MATTING TO BE INSTALLED AS DIRECTED BY THE ENGINEER					975
				TOTAL	975
				SAY	975

INSTALL PIPE(S) IN JURISDICTIONAL AREAS ACCORDING TO NCDOT BEST MANAGEMENT PRACTICES FOR CONSTRUCTION AND MAINTENANCE ACTIVITIES MANUAL.

NOTE: PERIMETER EROSION CONTROL MEASURES SHALL BE INSTALLED DURING CLEARING AND GRUBBING PHASE.

MEME A. DIAZ, PE
LEVEL IIIA NAME

675 EXP. 12/31/14
LEVEL IIIA CERTIFICATION NO.

NOTES: ANY DEVIATION FROM OPTIONS GIVEN WILL REQUIRE PRIOR APPROVAL BY ENGINEER.

ADDITIONAL EROSION CONTROL DEVICES MAY NEED TO BE INSTALLED AS DIRECTED BY THE ENGINEER.

THESE EROSION AND SEDIMENT CONTROL PLANS COMPLY WITH THE REGULATIONS SET FORTH BY THE NCG-010000 GENERAL CONSTRUCTION PERMIT EFFECTIVE AUGUST 3, 2011 ISSUED BY THE NORTH CAROLINA DEPARTMENT OF ENVIRONMENT AND NATURAL RESOURCES DIVISION OF WATER QUALITY.

DRAWN BY: CGW DATE: 02/13
CHECKED BY: MAD DATE: 02/13

ROADSIDE ENVIRONMENTAL UNIT
DEPARTMENT OF TRANSPORTATION
DIVISION OF HIGHWAYS
RALEIGH, N.C.

2012 STANDARD SPECIFICATIONS

Prepared by
URS
URS Corporation - North Carolina
1600 Perimeter Park Drive, Suite 400
Morrisville, NC 27560
PHONE: 919 461-1100 FAX: 919 461-1415
NC LIC.# C-2243

PROJECT: 17BP.1.R.25
HERTFORD COUNTY
STATION: 13+35.00 -L-
REPLACES BRIDGE NO. 450057

STATE OF NORTH CAROLINA
DEPARTMENT OF TRANSPORTATION
RALEIGH

EROSION CONTROL PLAN

BRIDGE ON SR 1150 OVER CUTAWHISKIE SWAMP BETWEEN SR 1141 AND SR 1152

24'-10" CLEAR ROADWAY - 90° SKEW

REVISIONS						SHEET NO.
NO.	BY:	DATE:	NO.	BY:	DATE:	EC-2
1			1			TOTAL SHEETS
2			2			31

WBS # 17BP.1.R.25

CONTRACT #:

COIR FIBER WATTLE WITH POLYACRYLAMIDE (PAM) DETAIL

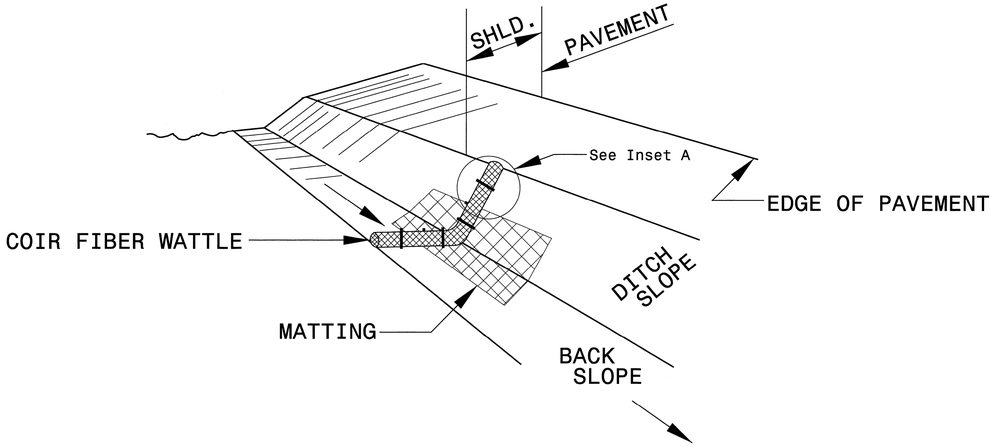

ISOMETRIC VIEW

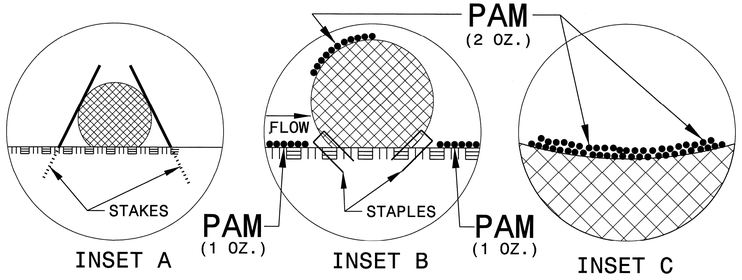

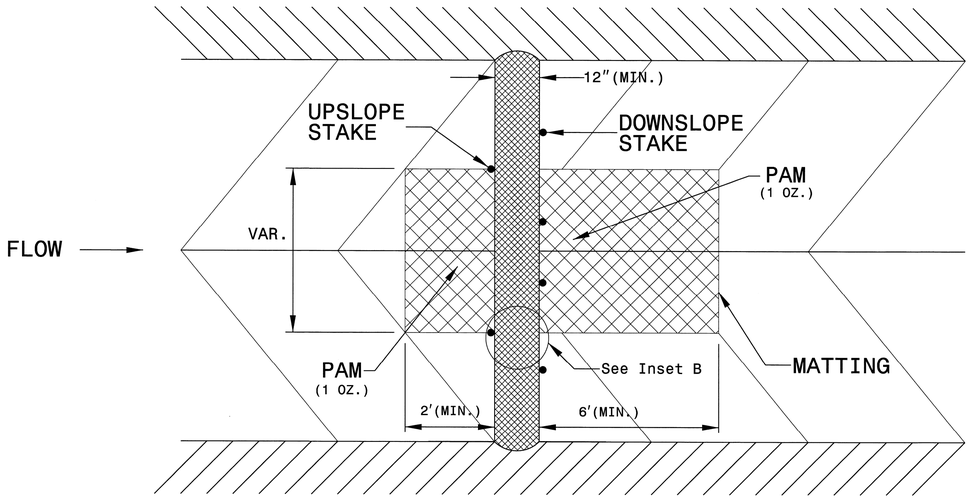

TOP VIEW

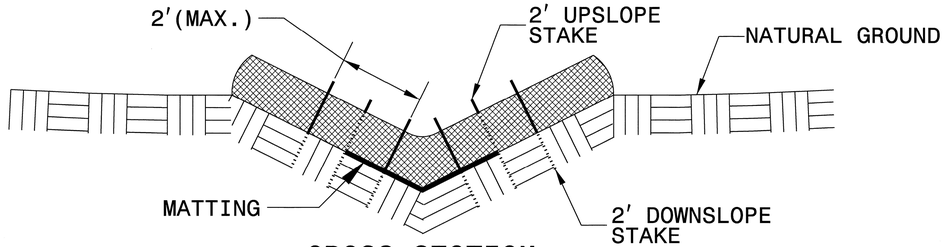

CROSS SECTION VEE DITCH

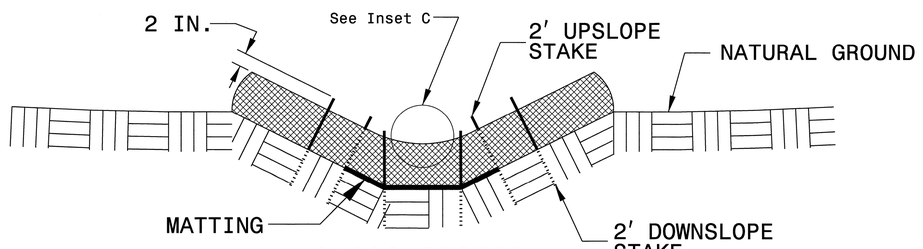

CROSS SECTION TRAPEZOIDAL DITCH

NOTES:

USE MINIMUM 12 IN. DIAMETER COIR FIBER (COCONUT FIBER) WATTLE.

USE 2 FT. WOODEN STAKES WITH A 2 IN. BY 2 IN. NOMINAL CROSS SECTION.

ONLY INSTALL WATTLE(S) TO A HEIGHT IN DITCH SO FLOW WILL NOT WASH AROUND WATTLE AND SCOUR DITCH SLOPES AND AS DIRECTED.

INSTALL A MINIMUM OF 2 UPSLOPE STAKES AND 4 DOWNSLOPE STAKES AT AN ANGLE TO WEDGE WATTLE TO BOTTOM OF DITCH.

PROVIDE STAPLES MADE OF 0.125 IN. DIAMETER STEEL WIRE FORMED INTO A U SHAPE NOT LESS THAN 12" IN LENGTH.

INSTALL STAPLES APPROXIMATELY EVERY 1 LINEAR FOOT ON BOTH SIDES OF WATTLE AND AT EACH END TO SECURE IT TO THE SOIL.

INSTALL MATTING IN ACCORDANCE WITH SECTION 1631 OF THE STANDARD SPECIFICATIONS.

PRIOR TO POLYACRYLAMIDE (PAM) APPLICATION, OBTAIN A SOIL SAMPLE FROM PROJECT LOCATION, AND FROM OFFSITE MATERIAL, AND ANALYZE FOR APPROPRIATE PAM FLOCCULANT TO BE APPLIED TO EACH WATTLE.

INITIALLY APPLY 2 OUNCES OF ANIONIC OR NEUTRALLY CHARGED PAM OVER WATTLE WHERE WATER WILL FLOW AND 1 OUNCE OF PAM ON MATTING ON EACH SIDE OF WATTLE. REAPPLY PAM AFTER EVERY RAINFALL EVENT THAT IS EQUAL TO OR EXCEEDS 0.50 IN.

PROJECT: 17BP.1.R.25

HERTFORD COUNTY

STATION: 13+35.00 -L-

REPLACES BRIDGE NO. 450057

STATE OF NORTH CAROLINA
DEPARTMENT OF TRANSPORTATION
RALEIGH

EROSION CONTROL DETAIL

BRIDGE ON SR 1150 OVER CUTAWHISKIE SWAMP BETWEEN SR 1141 AND SR 1152

24'-10" CLEAR ROADWAY - 90° SKEW

REVISIONS						SHEET NO.
NO.	BY:	DATE:	NO.	BY:	DATE:	EC-3
1			1			TOTAL SHEETS
2			2			31

CONTRACT #:

WBS # 17BP.1.R.25

SILT FENCE COIR FIBER WATTLE BREAK DETAIL

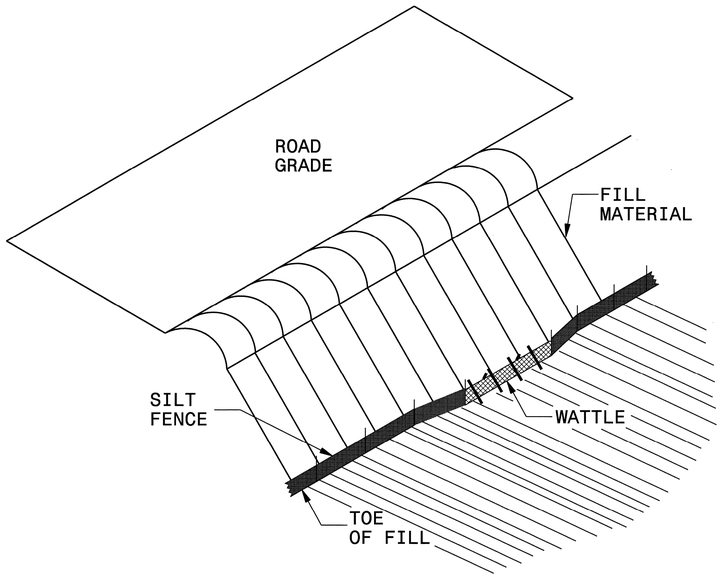

ISOMETRIC VIEW

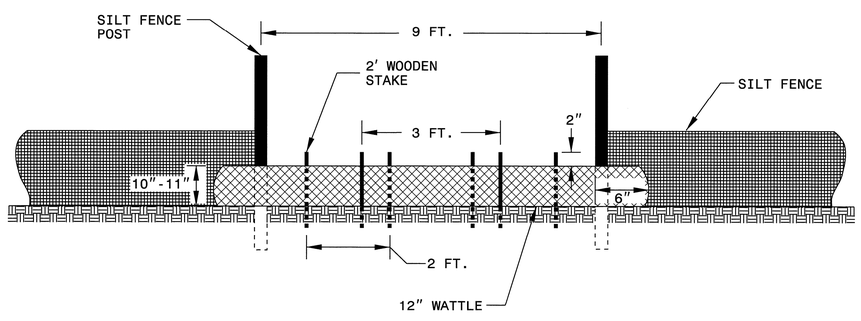

VIEW FROM SLOPE

NOTES:

USE MINIMUM 12 IN. DIAMETER COIR FIBER (COCONUT FIBER) WATTLE AND LENGTH OF 10 FT.

EXCAVATE A 1 TO 2 INCH TRENCH FOR WATTLE TO BE PLACED.

DO NOT PLACE WATTLE ON TOE OF SLOPE.

USE 2 FT. WOODEN STAKES WITH A 2 IN. BY 2 IN. NOMINAL CROSS SECTION.

INSTALL A MINIMUM OF 2 UPSLOPE STAKES AND 4 DOWNSLOPE STAKES AT AN ANGLE TO WEDGE WATTLE TO GROUND.

PROVIDE STAPLES MADE OF 0.125 IN. DIAMETER STEEL WIRE FORMED INTO A U SHAPE NOT LESS THAN 12″ IN LENGTH.

INSTALL STAPLES APPROXIMATELY EVERY 1 LINEAR FOOT ON BOTH SIDES OF WATTLE AND AT EACH END TO SECURE IT TO THE SOIL.

WATTLE INSTALLATION CAN BE ON OUTSIDE OF THE SILT FENCE AS DIRECTED.

INSTALL TEMPORARY SILT FENCE IN ACCORDANCE WITH SECTION 1605 OF THE STANDARD SPECIFICATIONS.

INSET A

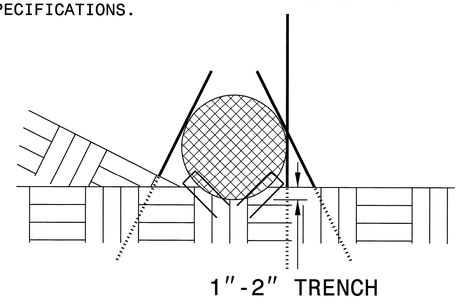

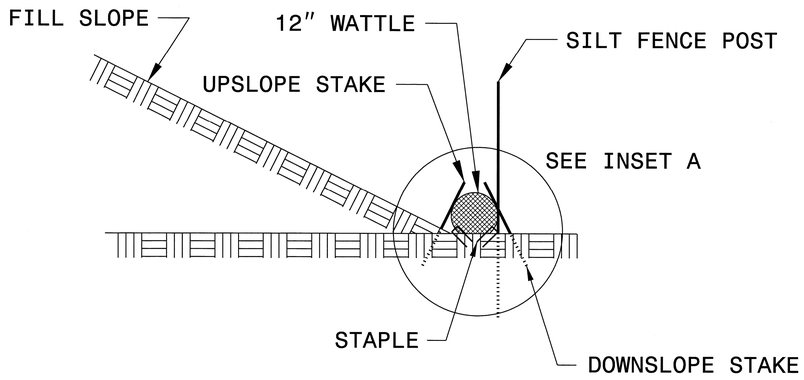

SIDE VIEW

PROJECT: 17BP.1.R.25

HERTFORD COUNTY

STATION: 13+35.00 -L-

REPLACES BRIDGE NO. 450057

STATE OF NORTH CAROLINA
DEPARTMENT OF TRANSPORTATION
RALEIGH

EROSION CONTROL DETAIL

BRIDGE ON SR 1150 OVER
CUTAWHISKIE SWAMP BETWEEN
SR 1141 AND SR 1152

24'-10" CLEAR ROADWAY - 90° SKEW

REVISIONS						SHEET NO.
NO.	BY:	DATE:	NO.	BY:	DATE:	EC-4
1			1			TOTAL SHEETS
2			2			31

PROJECT REFERENCE NO.	SHEET NO.
17BP.1.R.25	UO-1

UTILITIES BY OTHERS

NOTE:
ALL PROPOSED UTILITY WORK SHOWN ON THIS SHEET WILL BE DONE BY OTHERS

MA Engineering CONSULTANTS, INC.
598 East Chatham Street Suite 137 Cary, NC 27511
Phone: 919.297.0220 Fax: 919.297.0221

SCALE: 1″ = 30′ PLAN

TELEPHONE – CENTURYLINK
WATER – HERTFORD COUNTY

$$$$$$SYSTIME$$$$$
$$$$$$$$$$$$$$$$DGN$$$$$$$$$$$$$$$$$$$$
$$$USERNAME$$$$

TOTAL SHEETS 31