DIVISION 15A – PLUMBING

1.1 DESCRIPTION OF THE WORK

A. Work under this section includes, but is not necessarily limited to, furnishing and installing the following:
   1. Plumbing fixtures, water heaters, and any other equipment necessary.
   2. Cold and hot water piping and insulation.
   3. DWV piping.
   4. Connection of all equipment; drain, vent, water.

B. All work under this contract shall be installed in compliance with the latest edition of the following codes and standards insofar as they apply.
   1. The National Electrical Code.
   2. 2012 N.C. Building Code Plumbing Edition
   3. American Society of Sanitary Engineering Standard 1010.
   4. All local codes and ordinances.

C. These codes are minimum standards. If codes require a more stringent method of construction than the specifications require, the codes shall govern.

D. The Plumbing Contractor shall be licensed in the State of North Carolina and have all local licenses required for the work.

E. Obtain all permits, licenses, inspections, etc., required for the work, and pay for the same.

1.2 INTENT

A. The intent of these specifications and accompanying drawings is to convey as reasonably as possible the requirements for a complete job ready for the building to operate. The Plumbing Contractor shall take this into consideration and include in his base bid allowance for contingencies as will allow him to provide minor pieces of equipment and labor not specifically indicated but required for the job to operate properly, at no additional cost to the Owner.

1.3 COORDINATION

A. Coordinate work with other contractors. Notify Architect of apparent conflicts early to expedite construction. If structural damage appears imminent, stop work and notify Architect for a decision before resuming operations.

B. Locations shown are approximate. The Plumbing Contractor shall refer to the architectural drawings for placement of equipment, fixtures, etc. Where locations are not clear, the Contractor shall obtain the exact locations from the Architect.

C. Coordinate all exterior piping connections w/Architect, site contractor/plans. Verify manhole elevations and provide backwater valves as required if fixture flood level rims are below next upstream manhole cover elevation. Notify engineer of backwater valve requirement or other issue prior to bid.

1.4 SHOP DRAWINGS

A. Shop drawings shall be submitted for plumbing fixtures and for pipe. These may consist of the manufacturer's standard catalog or tear sheets and shall have the exact items being offered clearly identified.

PART 2 – PRODUCTS

2.1 FIXTURES

A. Each fixture shall be properly supported from the building structure as required to the end effect that all fixtures and accessories will be held rigidly in place. Water pipes supplying the fixtures must also be held rigidly in place.

B. Provide loose key angle stops and chrome plated supply pipe water supplies to fixtures.

C. All exposed piping traps and accessories for fixtures shall be chrome plated. Provide chrome plated escutcheon plates where pipes enter walls.

D. Provide shutoff valves for all sinks, water heaters, toilets, washing machines, refrigerator icemaker, exterior hose bibbs and all other plumbing fixtures.

E. Provide trap primers for all floor drains in areas not served by hose bibbs.

2.2 PIPING

A. Drain waste: All waste piping shall be Schedule 40 PVC–DWV with the following exceptions: Use cast iron piping in all return air plenums and penetrations of rated walls/floors/ceilings. Review Arch. and Mech. drawings. Use ABS or cast iron piping for drainage of fluid temperature greater than 140 deg. F for a minimum distance of 10'–0".

B. Hot and cold water piping above grade: Type "L" copper w/solder joints (ASTM–B88), hard drawn with wrought copper fittings (ANSI B16.22)

C. Cold water piping below grade: Type "K" copper (ASTM–B8A) soft drawn.

D. Hangers: Use pipe hangers where required on 8–foot centers with saddles to avoid crushing insulation.

E. Solder: 95/5. Lead free.

F. Unions: Provide unions where indicated on drawings, in long runs of piping (except drainage) and at equipment to provide convenient disassembly. Provide dielectric unions when connecting copper tubing to equipment and piping made of ferrous materials.

2.3 CLEANOUTS

A. Hex plugs in rough areas: Recessed plugs with cover plates in exposed locations.

2.4 SHOCK ARRESTERS

A. Provide shock arresters as required by codes, manufacturer's recommendations and accepted industry standards for qualify construction. Provide for all quick closing valves.

PART 3 – EXECUTION

3.1 CONNECTIONS

A. This contract includes complete connection of cold water, hot water, drainage, and vent piping as required. All fittings, valves, accessories, cutoffs, drains, etc., required to complete such connections shall be included.

B. The connection to water closets shall be made watertight with gasket and wax ring. Floor flanges shall be caulked into position. Plastic caps shall be provided on the tie down bolts, and shall be secured in place by screwing down on threaded brass washers.

C. Where water pipes connect to exposed chrome plated trim, use proper chrome plated escutcheons.

3.2 SERVICE ACCESS

A. All valves and accessories shall be insulated so that they can be properly serviced. In no case shall the Plumbing Contractor install equipment or other components in situations that do not meet code requirements or manufacturer's requirements. Provide access doors as required to access valves, etc.

3.3 ROUTING OF PIPING

A. Coordinate routing of piping with others, line up work true to or at right angle to adjacent surfaces and in a workmanlike manner. Support all interior piping from building structure by means of hanger or inserts to maintain pitch of lines, to prevent vibration, and to secure piping place.

B. Space pipe hangers 8'–0" on center for one inch and smaller pipe, 4'–0" on center for 1–1/4 inch and larger pipe. Provide expansion loops as required.

C. Pipe hangers for insulated lines shall have suitable saddles to protect insulation.

3.4 INSULATION

A. All H/W and C/W piping shall be insulated with a min. of 1" inch fiber glass insulation with kraft paper jacket. Use PVC fitting covers on elbows and joints.
   All H/W piping of circulating systems shall be insulated with 1" insulation per Sect. 504.5 of the NCSBC 2012 Energy Conservation Code.

B. Provide pre–fabricated insulation kits for all sink and lavatory exposed drain and supply piping.

3.5 INSPECTIONS AND TESTS

A. Before being concealed, all water, soil and vent piping shall be tested to determine if they are water– and air–tight.

B. Prior to placing into service, entire system shall be tested for leaks in strict accordance with state and local codes.

3.6 STERILIZATION OF PIPING

A. Sterilize the new water piping thoroughly with a solution containing not less than 50 parts per million of available chlorine, using liquid chlorine, or sodium hydrochloride solution, introduced into the system in an approved manner. The sterilizing solution shall remain in the system in an approved manner. The sterilizing solution shall remain in the system for a period of 24 hours. After sterilization, flush the solution from the system with clean water until the residual chlorine content is not greater than 0.2 parts per million, unless otherwise directed.

3.7 SERVICE PRESSURE

A. Provide approved water–pressure reducing valve (PRV) if service pressure exceeds 80 psi to reduce pressure to 80 psi static or less and as required per NCSBC–Plumbing Sect. 604.8.

3.8 DRAINDOWN

A. Contractor to provide for complete plumbing system drain down.

3.9 CLEAN UP

A. During construction, keep the site clear of debris and upon completion, and before final inspection, clean up the premises to remove all evidence of his work. In addition, upon completion of construction, clean, wash, and/or polish all fixtures, equipment and exposed material and leave them bright and clean.

3.10 GUARANTEES

A. Guarantee all materials and labor included in the plumbing work for a period of one year from date of final acceptance by the Owner.

B. Any defects in the system which become evident during the guarantee period shall be corrected without cost to the Owner. This shall include the replacing of defective materials where required, and the repair of damage caused by leaking pipes, etc., and damage to building surfaces caused in making repairs.

SYMBOL LEGEND – PLUMBING

SYMBOL	DESCRIPTION
	WASTE PIPING (W)
	VENT PIPING (V)
	COLD WATER PIPING (CW)
	HOT WATER PIPING (HW)
HWR	HOT WATER RETURN PIPING (HWR)
HTHW	HIGH TEMPERATURE HW PIPING (HTHW) 120 DEG. F
LTHW	LOW TEMPERATURE HW PIPING (LTHW) 90 DEG. F
COFF	CLEANOUT FINISH FLOOR
WCO/HCO	WALL/HORIZONTAL CLEANOUT
COFG	CLEANOUT FINISH GRADE
	DIELECTRIC UNION
	SHUT–OFF VALVE
	CHECK VALVE
	BALANCING VALVE
	CIRCULATION PUMP (CP)
	WATER METER (MTR)
	VENT THRU ROOF (VTR)
	POINT OF NEW CONNECTION TO EXISTING

LOAD SUMMARY – PLUMBING

WASTE DEMAND (FU)	WATER DEMAND (FU)	WATER DEMAND (GPM)
83.0	151.5	79.2

GENERAL NOTES – PLUMBING

1. PREPLAN ALL WORK PRIOR TO ORDERING, PURCHASING, OR FABRICATING ANY PART OF THE WORK DESCRIBED BY THIS DRAWING.

2. IMMEDIATELY NOTIFY THE ENGINEER OF ANY CONFLICTS WITH EXISTING FIELD CONDITIONS OR THE WORK OF OTHER TRADES.

3. RESOLVE ALL CONFLICTS PRIOR TO INCURRING ANY MATERIAL OR LABOR EXPENSES.

4. COMPLY WITH THE MANUFACTURER'S TECHNICAL INSTRUCTIONS WHEN INSTALLING PLUMBING FIXTURES, MATERIALS, AND DEVICES.

5. LOCATE FIXTURES AND EQUIPMENT GENERALLY AS SHOWN ON THE PLANS; HOWEVER, COORDINATE LOCATIONS WITH ACTUAL FIELD CONDITIONS TO PRESERVE ALL CODE–REQUIRED AND MANUFACTURER – REQUESTED SERVICE CLEARANCES.

6. COORDINATE ROUTING OF ALL PIPING WITH BUILDING STRUCTURE AND WITH THE WORK OF OTHER TRADES. OFFSET VENT PIPING AROUND BEAMS AND JOISTS AS NECESSARY.

7. ALL HANDICAP FIXTURES AND INSTALLATION OF HANDICAP FIXTURES SHALL CONFORM TO ADA REQUIREMENTS.

8. AT EXTERIOR WALL, INSTALL WATER PIPING ON HEATED SIDE OF WALL INSULATION.

9. PROVIDE WATER HAMMER ARRESTORS AT THE END OF EACH COLD AND HOT WATER BRANCH RISER. SIZE ARRESTOR APPROPRIATELY.

10. PROVIDE CONCRETE RING FOR ALL EXTERIOR CLEAN–OUTS.

11. REVIEW SITE PLAN FOR UTILITIES AND ORIENTATION PRIOR TO START OF WORK.

12. G.C. TO PROVIDE ANY ROOF PENETRATIONS.

13. PROVIDE HTHW AT 120 DEGREES (F) AND LTHW AT 90 DEGREES (F).

PLUMBING FIXTURE SCHEDULE *

MARK	DESCRIPTION	ALTERNATE MANUFACTURER/MODEL	ALTERNATE MANUFACTURER/MODEL
WC1	WATER CLOSET (FLOOR MOUNT REAR OUTLET W/BACK SPUD) AMERICAN STANDARD "PRIOLO FLOWISE" #3697.001, ELONGATED BOWL, 1.28 GPF, VITREOUS CHINA, AND 1 1/2" BACK SPUD. WC TO BE ADA COMPLIANT. PROVIDE OPEN FRONT SEAT, AND SENSOR W/ MANUAL OVERRIDE FLUSH VALVE, EQUAL TO SLOAN OPTIMA 140–1.28–ES–S (AC POWERED) FLUSH VALVE.	ZURN Z5647–BWL FIXTURE. ZURN #ZEMS6152AV–HET, 1.28 GPF VALVE.	FIXTURE–NO 3RD CHOICE AVAILABLE. HYDROTEK H–8CB–128, 1.28 GPF VALVE.
WC2	WATER CLOSET (WALL MOUNT BACK SPUD) AMERICAN STANDARD "AFWALL FLOWISE" #3353.128, ELONGATED BOWL, 1.28 GPF, VITREOUS CHINA, AND 1 1/2" BACK SPUD. WC TO BE ADA COMPLIANT WHERE REQUIRED. PROVIDE OPEN FRONT SEAT, AND SENSOR W/ MANUAL OVERRIDE FLUSH VALVE, EQUAL TO SLOAN OPTIMA MODEL 152–1.28–ES–S (AC POWERED) FLUSH VALVE.	ZURN #Z5617 FIXTURE. ZURN #ZEMS6140AV FLUSH VALVE.	KOHLER KINGSTON #K–4329 FIXTURE. HYDROTEK H–8000C–CB FLUSH VALVE.
UR	URINAL AMERICAN STANDARD "WASHBROOK FLOWISE" #6515.001, 1.0 GPF, VITREOUS CHINA, 3/4" BACK SPUD, AND SENSOR W/ MANUAL OVERRIDE FLUSH VALVE SLOAN #195–1.0–ES–S–TMO (AC POWERED). ADA COMPLIANT.	ZURN #5760 WITH ZURN ZEMS6195AV–OB FLUSH VALVE.	TOTO #UT104EV WITH TOTO #TEU2LN11 FLUSH VALVE.
L1	LAVATORY (ACCESSIBLE, WALL HUNG) AMERICAN STANDARD "LUCERNE" # 0355.012 WHITE WITH CONCEALED ARM CARRIER AND DRAIN ASSEMBLY (7723.018). ADA COMPLIANT. FURNISH WITH SLOAN ETF–600 AC POWERED SENSOR FAUCET. PROVIDE ACCESSORIES AS REQUIRED. COORDINATE TRIM AND SINK FAUCET DRILLING FOR 4" CNTRS OR AS REQUIRED PER OWNER.	KOHLER GREENWICH #K–2032 WITH HYDROTEK H–1000C FAUCET.	ELJER MURRAY II #051–0244 WITH AMERICAN STANDARD INNSBROOK #6059.205.
L2	2– STATION LAVATORY (ACCESSIBLE) SLOAN SLOANSTONE TWO STATION LAVATORY # ELS–72600, ADA COMPLIANT, COLOR MDB– VERIFY COLOR W/ARCH. FURNISH WITH SLOAN OPTIMA ETF–600 AC POWERED SENSOR FAUCETS.	BRADLEY MODEL EXD–2N WITH HYDROTEK H–1000C FAUCET.	WILLOUGHBY MODEL WAW–2322–DMF WITH AMERICAN STANDARD INNSBROOK #6059.205.
L3	3– STATION LAVATORY (ACCESSIBLE) SLOAN SLOANSTONE THREE STATION LAVATORY # ELS–73600, ADA COMPLIANT, COLOR MDB– VERIFY COLOR W/ARCH. FURNISH WITH SLOAN OPTIMA ETF–600 AC POWERED SENSOR FAUCETS.	BRADLEY MODEL EXD–3N WITH HYDROTEK H–1000C FAUCET.	WILLOUGHBY MODEL WAW–2333–DMF WITH AMERICAN STANDARD INNSBROOK #6059.205.
MS	MOP SINK ACORN SERIES TRH, TERRAZZO SERVICE BASIN WITH REDUCED HEIGHT AND STAINLESS STEEL GRID STRAINER WITH 3" PIPE CONNECTION, 24" X 36" UNIT SIZE (VERIFY). FAUCET: ACORN MODEL KFC CHROME PLATED SERVICE FAUCET WITH VACUUM BREAKER, INTEGRAL STOPS, ADJUSTABLE WALL BRACE, PAIL HOOK AND 3/4" HOSE THREAD ON SPOUT. HOSE & HOSE BRACKET: ACORN MODEL KH36 LONG FLEXIBLE 5/8" RUBBER HOSE, CLOTH REINFORCED.	FLORESTONE SERIES 92 WITH SPEAKMAN #MR–371 FAUCET, HOSE AND MOP HANGER.	CRANE MOP SINK #TSB–3003 WITH #830–AA FAUCET, #832–AA HOSE, #1453–BB STRAINER, #889–CC MOP HANGER, #E–77–AA BUMPER GUARD, AND STAINLESS STEEL SPLASH GUARD.
CP	CIRCULATING PUMP BELL & GOSSET, SERIES NBF–22 IN–LINE CIRCULATOR PUMP, 1/12 HP, 115 VAC, FLA=0.8 1 PH., 3/4" CONN., WITH A MAXIMUM OF 22 GPM AND 15' TDH. PUMP TO BE ALL BRONZE CONSTRUCTION, COORDINATE WITH ELEC. CONTRACTOR FOR POWER FEED. PROVIDE DISCONNECT SWITCH.	TACO MODEL #110.	ARMSTRONG MODEL #S–25.
EWC	HIGH/LOW ELECTRIC WATER COOLER OASIS DUAL LEVEL ELECTRIC WATER COOLER. MODEL # P8ACSL, ADA COMPLIANT. PIPE TO SINGLE DRAIN AND SUPPLY LINE. VERIFY HIGH/LOW UNIT MOUNTING SIDES AND MODEL.	HALSEY TAYLOR #HACBBL–Q.	ELKAY MODEL #EZSTL8LC.
WCS	WATER CLOSET SUPPORTS ZURN 4" NO HUB #21203–N–X W/HEAVY–DUTY REAR ANCHOR FOR WC2. COORDINATE MODEL WITH LEFT/RIGHT FLOW DIRECTION AS REQUIRED.	JAY R. SMITH #210 SERIES.	JOSAM STD. 4" NO HUB, 2" VENT.
URS	URINAL SUPPORTS ZURN Z–1222 WITH ADJUSTABLE PLATES.	JAY R. SMITH #0637.	JOSAM #17550.
EWH–1	EXISTING ELECTRIC WATER HEATER CRAFTMASTER E2F40, 40 GAL., 4500W/240V. PROVIDE NEW PIPING PER DETAIL/REVISED PLAN.	---	---
ET	EXPANSION TANK AO SMITH 2 GALLON EXPANSION TANK PMC–2.	AMTROL ST–5–C.	STATE ETC–2X.
EWH–2	ELECTRIC WATER HEATER #2 W/2 GAL. EXPANSION TANK A.O. SMITH MODEL EJC–10, 10 GALLON, 1,650 WATT, 3/4" INLET AND OUTLET, 120 V.	RHEEM #81VP10S.	BRADFORD WHITE #M–1–10U6SS.
RPZ	2" REDUCED PRESSURE BACKFLOW PREVENTER WATTS MODEL #009QT–2" REDUCED PRESSURE BACKFLOW PREVENTER, CAST IRON CONSTRUCTION.	ZURN #375–2"	FEBCO #860–2"
FD	FLOOR DRAIN ZURN ZN–415 WITH DEEP SEAL P–TRAP, 5" X 5" TYPE "S" SQUARE STRAINER AND 3" CONNECTION, VANDAL–PROOF TOP. PROVIDE MODEL WITH TRAP PRIMER CONNECTION ONLY FOR FLOOR DRAINS IN AREAS NOTED ON SHEET P300.	JOSAM #30000–S.	JAY R. SMITH #2005–B.

* OR APPROVED EQUAL

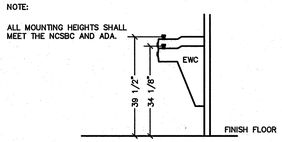

1/P1 EWC DETAIL
SCALE: N.T.S.

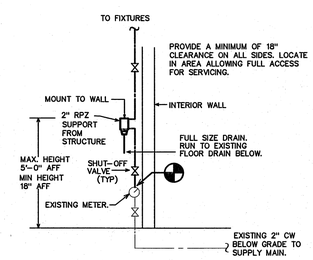

2/P1 RPZ MOUNTING DETAIL
SCALE: N.T.S.

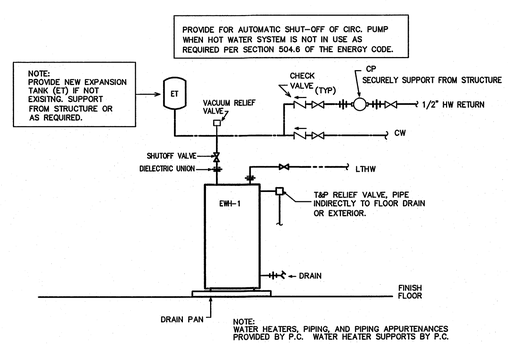

3/P1 EWH–1 DETIAL
SCALE: N.T.S.

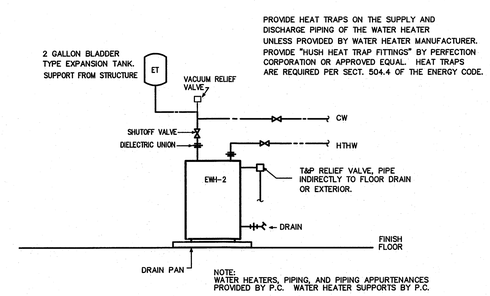

4/P1 EWH–2 DETAIL
SCALE: N.T.S.

CONSTRUCTION DOCUMENTS

SEAL: NORTH CAROLINA PROFESSIONAL SEAL 22038 ENGINEER BENJAMIN E. BURKE
6/11/2015

DESIGNED BY:
FACILITIES DESIGN
ARCHITECTS & ENGINEERS
FACILITIES MANAGEMENT DIVISION, NCDOT
1 SOUTH WILMINGTON STREET
RALEIGH, NORTH CAROLINA 27601
Phone: 919–707–4540 Fax: 919–715–0399

CONSULTANT:
ENGINEER
BURKE DESIGN GROUP, PA
Mechanical Engineers
3305-109 Durham Drive
Raleigh, North Carolina 27603
919.771.1916 fax: 919.779.0826
email: benburke@nc.rr.com
Corp. License # C–2532

DRAWING TITLE / DISCRIPTION:
PLUMBING SPECIFICATIONS

PROJECT TITLE:
CAMDEN COUNTY REST AREA REFURBISHMENT
2356 HWY 117 NORTH, SOUTH MILLS NC 27976
CAMDEN COUNTY, NORTH CAROLINA

SCO ID NO.	14–11342–01A
TIP PROJ. NO.	–
WBS NO.	36059.27
FEDERAL ID NO.	

ASSET NUMBER:
CO.# SITE.# BLDG.#
15 – 04 – 02

REVISIONS

NO.	DATE

DATE ISSUED: 6–08–2015
DRAWN BY: DS
CHECKED BY: BEB

SHEET NO.
P1