DocuSign Envelope ID: 867BF8B3-42B8-4031-AE84-18C4B520DD81

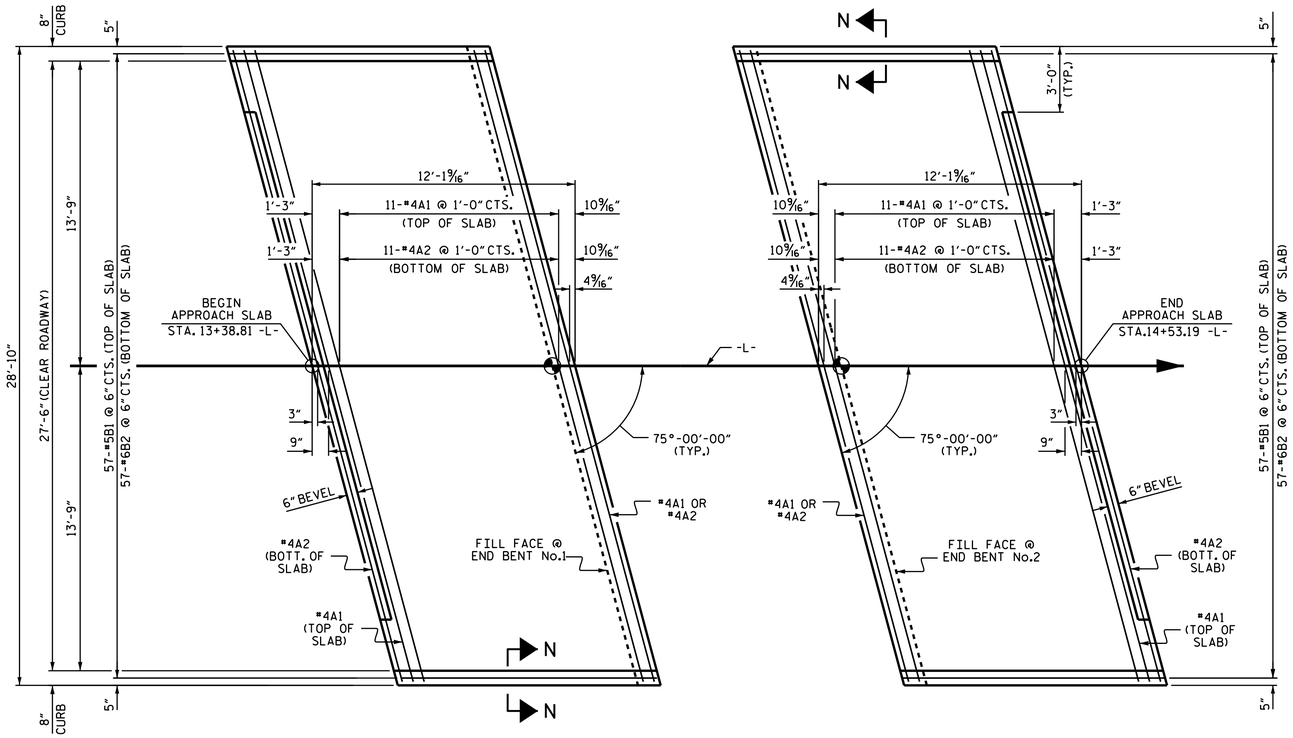

PLAN @ END BENT No.1

PLAN @ END BENT No.2

DIMENSIONS SHOWN ARE TYPICAL FOR BOTH APPROACH SLABS

NOTES

FOR REINFORCED BRIDGE APPROACH FILL INCLUDING GEOTEXTILE, IMPERMEABLE GEOMEMBRANE, 4" Ø DRAINAGE PIPE, #78M STONE, AND SELECT MATERIAL, SEE ROADWAY PLANS.

AREA BETWEEN THE WINGWALL AND APPROACH SLAB SHALL BE GRADED TO DRAIN THE WATER AWAY FROM THE FILL FACE OF THE BRIDGE AND SHALL BE PAVED. SEE ROADWAY PLANS.

APPROACH SLAB GROOVING IS NOT REQUIRED.

BILL OF MATERIAL

APPROACH SLAB AT EB No.1

BAR	NO.	SIZE	TYPE	LENGTH	WEIGHT
✱ A1	26	#4	STR	29'-6"	256
A2	26	#4	STR	29'-6"	256
✱ B1	57	#5	STR	11'-1"	659
B2	57	#6	STR	11'-7"	992
REINFORCING STEEL				LBS.	1248
✱ EPOXY COATED REINFORCING STEEL				LBS.	915
CLASS AA CONCRETE				C. Y.	16.7

APPROACH SLAB AT EB No.2

BAR	NO.	SIZE	TYPE	LENGTH	WEIGHT
✱ A1	13	#4	STR	29'-6"	256
A2	13	#4	STR	29'-6"	256
✱ B1	57	#5	STR	11'-1"	659
B2	57	#6	STR	11'-7"	992
REINFORCING STEEL				LBS.	1248
✱ EPOXY COATED REINFORCING STEEL				LBS.	915
CLASS AA CONCRETE				C. Y.	16.7

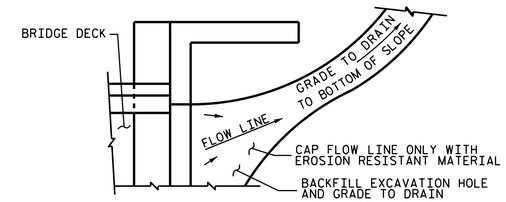

NOTE: IF THE APPROACH SLAB IS NOT CONSTRUCTED IMMEDIATELY AFTER THE BACKFILLING OF THE END BENT EXCAVATION, GRADE TO DRAIN TO THE BOTTOM OF THE SLOPE AND PROVIDE EROSION RESISTANT MATERIAL, SUCH AS FIBERGLASS ROVING OR AS DIRECTED BY THE ENGINEER TO PREVENT SOIL EROSION AND TO PROTECT THE AREA ADJACENT TO THE STRUCTURE. THE CONTRACTOR WILL BE REQUIRED TO REMOVE THESE MATERIALS PRIOR TO CONSTRUCTION OF THE APPROACH SLAB.

TEMPORARY DRAINAGE DETAIL

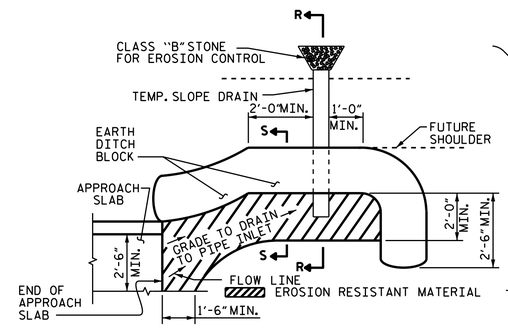

NOTE: IMMEDIATELY AFTER THE CONSTRUCTION OF THE APPROACH SLAB, THE CONTRACTOR SHALL PROVIDE TEMPORARY BERM AND SLOPE DRAIN. CONTRACTOR SHALL GRADE TO PIPE INLET AND PROVIDE EROSION RESISTANT MATERIAL AS SHOWN. THE EROSION RESISTANT MATERIAL SHALL BE EITHER 1) ASPHALT PLANT MIX, TYPE 1 OR TYPE 2, MIN. 2" DEPTH, 2) EROSION CONTROL MAT, OR 3) CONCRETE, AS DIRECTED BY THE ENGINEER. THE SLOPE DRAIN SHALL CONSIST OF A NON-PERFORATED TEMPORARY DRAINAGE PIPE, 12 INCHES IN DIAMETER.

PLAN VIEW

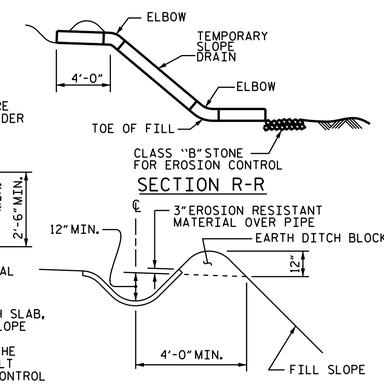

SECTION R-R

SECTION S-S

TEMPORARY BERM AND SLOPE DRAIN DETAILS

(TO BE USED WHEN SHOULDER BERM GUTTER IS REQUIRED)

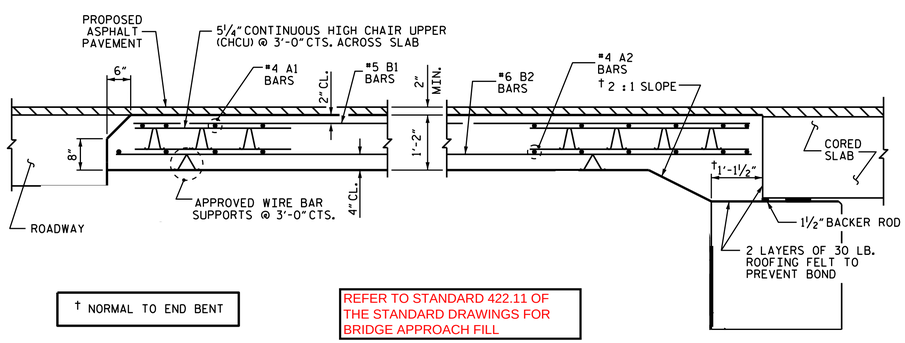

† NORMAL TO END BENT

REFER TO STANDARD 422.11 OF THE STANDARD DRAWINGS FOR BRIDGE APPROACH FILL

SECTION THRU SLAB

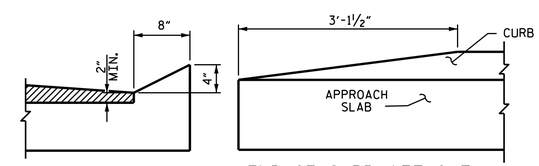

SECTION N-N

END OF CURB WITHOUT SHOULDER BERM GUTTER

CURB DETAILS

SPLICE LENGTHS		
BAR SIZE	EPOXY COATED	UNCOATED
#4	2'-0"	1'-9"
#5	2'-6"	2'-2"
#6	3'-10"	2'-7"

NORTH CAROLINA PROFESSIONAL SEAL 14045 ENGINEER TIMOTHY L. COGGINS

PROJECT NO. 17BP.1.R.65

PASQUOTANK COUNTY

STATION: 13+96.00 -L-

STATE OF NORTH CAROLINA
DEPARTMENT OF TRANSPORTATION
RALEIGH

STANDARD
BRIDGE APPROACH SLAB
FOR PRESTRESSED CONCRETE
CORED SLAB UNIT
(SUB-REGIONAL TIER)
75° SKEW

REVISIONS								SHEET NO.
NO.	BY:	DATE:	NO.	BY:	DATE:			S-20
1			3					TOTAL SHEETS
2			4					20

ASSEMBLED BY : REZA KOUCHEKI DATE : 11/6/14
CHECKED BY : K.P. SEDAI DATE : 11/20/14

DRAWN BY : SHS/MAA 5-09 REV. 12-11 MAA/AAC
CHECKED BY : BCH 5-09 REV. 8-14 MAA/TMG

09-DEC-2014 12:32
S:\DPG1\Division1\17BP.1.R.65\FinalPlans and SpecialProvisions\DigitSign Setup\400_000_17BP.1.R.65_SD_S0.dgn
pruffin

STD. NO. BAS_30_75S