DocuSign Envelope ID: 867BF8B3-42B8-4031-AE84-18C4B520DD81

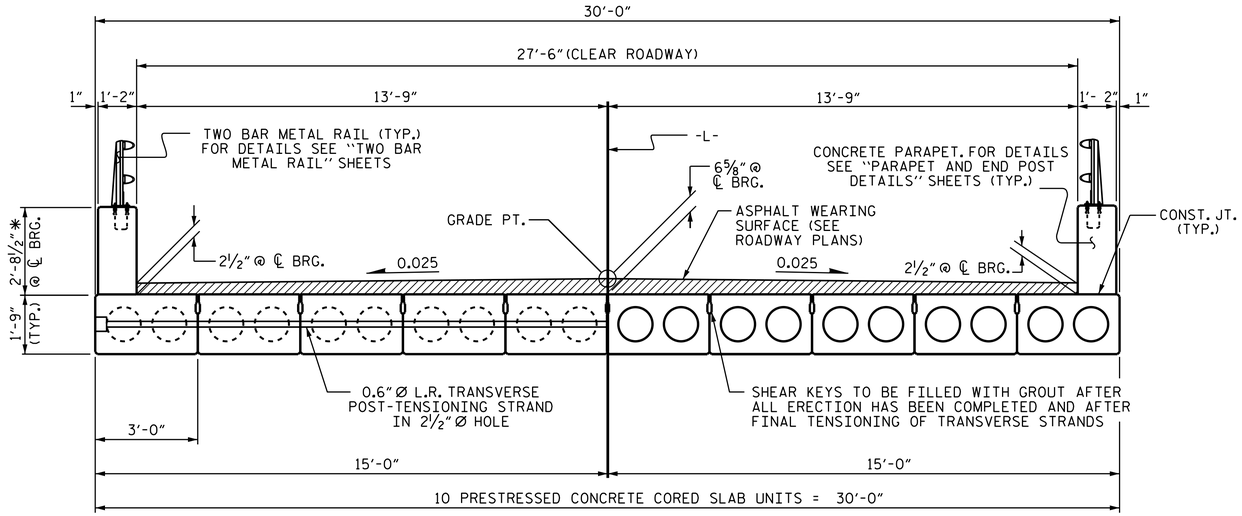

HALF SECTION
AT INTERMEDIATE DIAPHRAGMS

HALF SECTION
THROUGH VOIDS

TYPICAL SECTION

✱ - THE MAXIMUM PARAPET HEIGHT AND ASPHALT THICKNESS IS SHOWN. THE HEIGHT OF THE PARAPET AND ASPHALT THICKNESS VARIES WHILE THE TOP OF THE PARAPET FOLLOWS THE PROFILE OF THE GUTTERLINE. FOR PARAPET HEIGHT DETAILS AND ASPHALT THICKNESS, SEE SHEET 4 OF 5.

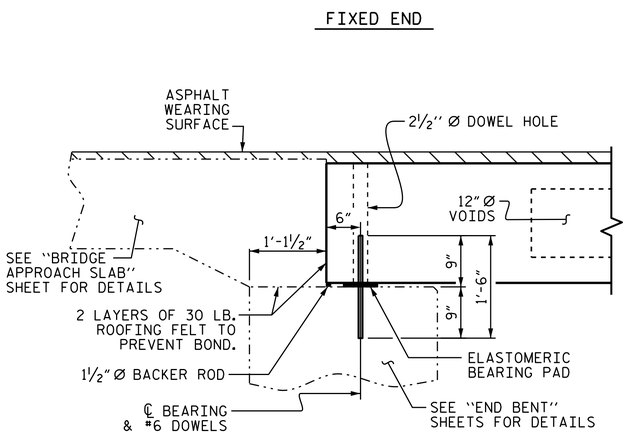

SECTION AT END BENT

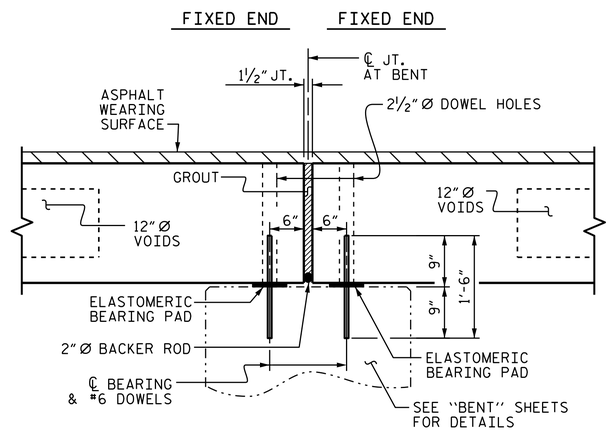

SECTION AT BENT

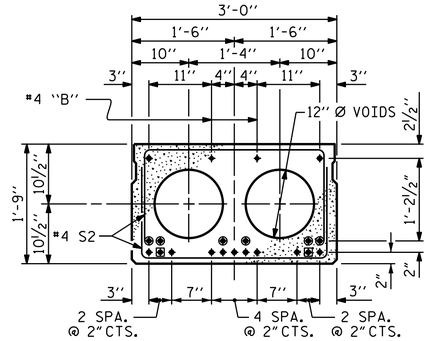

INTERIOR SLAB SECTION (40' UNIT)

(13 STRANDS REQUIRED)

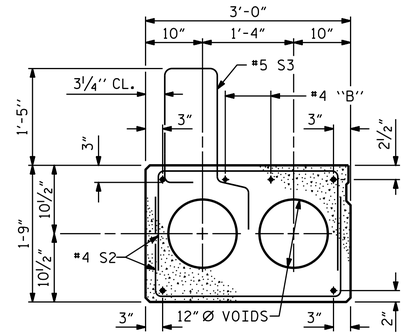

EXT. SLAB SECTION

(FOR PRESTRESSED STRAND LAYOUT, SEE INTERIOR SLAB SECTION.)

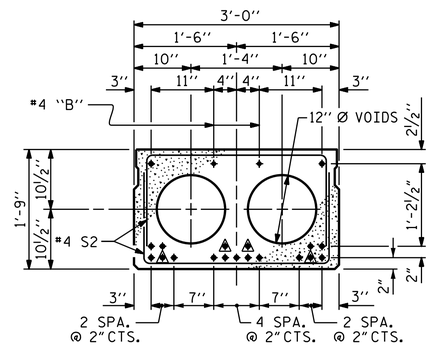

INTERIOR SLAB SECTION (50' UNIT)

(19 STRANDS REQUIRED)

0.6" Ø LOW RELAXATION STRAND LAYOUT

▲ BOND SHALL BE BROKEN ON THESE STRANDS FOR A DISTANCE OF 6'-0" FROM END OF CORED SLAB UNIT. SEE STANDARD SPECIFICATIONS, ARTICLE 1078-7.

■ BOND SHALL BE BROKEN ON THESE STRANDS FOR A DISTANCE OF 2'-0" FROM END OF CORED SLAB UNIT. SEE STANDARD SPECIFICATIONS, ARTICLE 1078-7.

◉ OPTIONAL FULL LENGTH DEBONDED STRANDS. THESE STRANDS ARE NOT REQUIRED. IF THE FABRICATOR CHOOSES TO INCLUDE THESE STRANDS IN THE CORED SLAB UNIT, THE STRANDS SHALL BE DEBONDED FOR THE FULL LENGTH OF THE UNIT AT NO ADDITIONAL COST. SEE STANDARD SPECIFICATIONS, ARTICLE 1078-7.

DEBONDING LEGEND

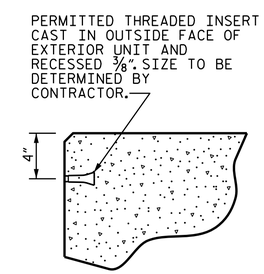

THREADED INSERT DETAIL

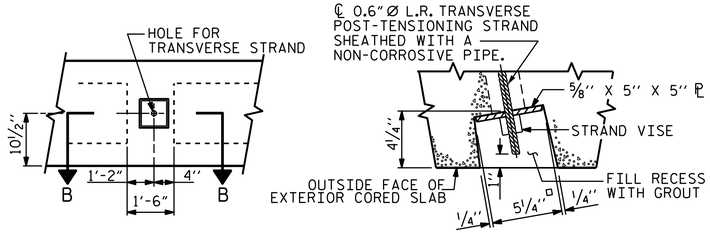

ELEVATION VIEW

SECTION B-B

GROUTED RECESS AT END OF POST-TENSIONED STRAND OF CORED SLABS

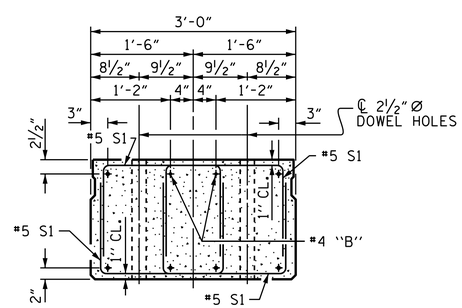

END ELEVATION

SHOWING PLACEMENT OF DOUBLE STIRRUPS AND LOCATION OF DOWEL HOLES. (STRAND LAYOUT NOT SHOWN.) INTERIOR SLAB UNIT SHOWN-EXTERIOR SLAB UNIT SIMILAR EXCEPT SHEAR KEY LOCATION.

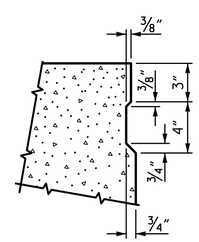

SHEAR KEY DETAIL

NOTE: OMIT SHEAR KEY ON OUTSIDE FACE OF EXTERIOR CORED SLABS.

PROJECT NO. 17BP.1.R.65
PASQUOTANK COUNTY
STATION: 13+96.00 -L-

SHEET 1 OF 5

STATE OF NORTH CAROLINA
DEPARTMENT OF TRANSPORTATION
RALEIGH

STANDARD
3'-0" X 1'-9"
PRESTRESSED CONCRETE CORED SLAB UNIT
75° SKEW

NORTH CAROLINA PROFESSIONAL SEAL 14045 ENGINEER TIMOTHY L. COGGINS

REVISIONS						SHEET NO.
NO.	BY:	DATE:	NO.	BY:	DATE:	S-4
1			3			TOTAL SHEETS
2			4			20

ASSEMBLED BY : REZA KOUCHEKI DATE : 10/30/14
CHECKED BY : K.P. SEDAI DATE : 11/18/14

DRAWN BY : DGE 5/09 REV. 12/11 MAA/AAC
CHECKED BY : BCH 6/09 REV. 8/14 MAA/TMG

09-DEC-2014 12:32
S:\DPGI\Division\17BP.1.R.65\Final Plans and Special Provisions\DigitSign Setup\400_000_17BP.1.R.65_SD_S0.dgn
mruffin