CONTRACT #:

WBS # 17BP.1.R.9

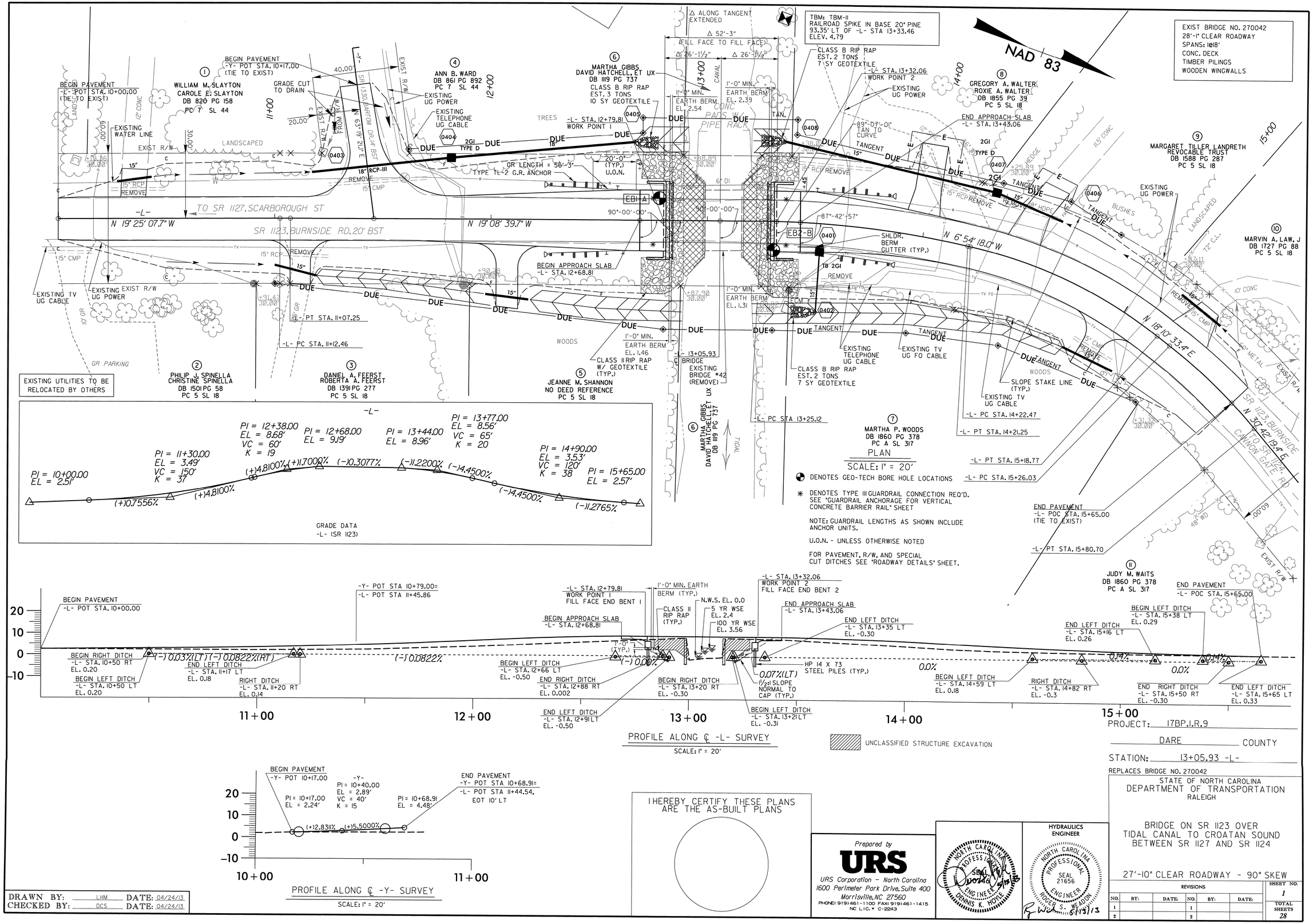

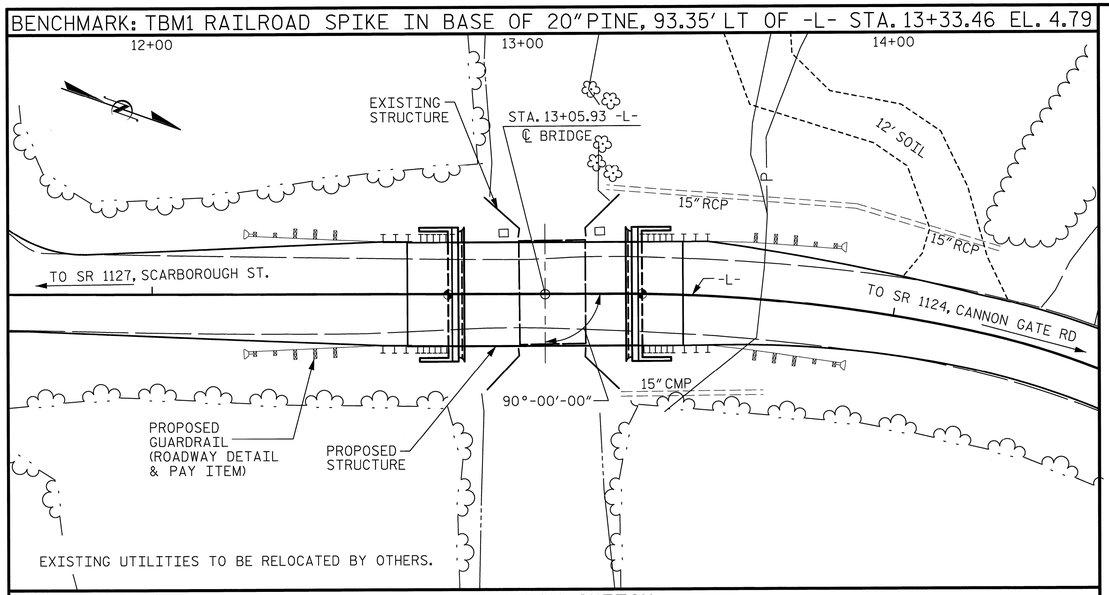

LOCATION SKETCH

HYDRAULIC DATA

DESIGN DISCHARGE _____= 60 CFS.
FREQUENCY OF DESIGN FLOOD _____= 5 YR.
DESIGN HIGH WATER ELEVATION___= 2.4 FT.
DRAINAGE AREA _____= 0.29 SQ. MI.
BASE DISCHARGE (Q100) _____= 180 CFS.
BASE HIGH WATER ELEVATION ____= 3.56 FT.

OVERTOPPING FLOOD DATA

OVERTOPPING DISCHARGE _____= 67 CFS
FREQUENCY OF OVERTOPPING FLOOD __= 5(+) YR.
OVERTOPPING FLOOD ELEVATION_____= 2.50 FT.

DOMINANT HYDRAULIC INFLUENCE IS TIDAL FLOW/STORM SURGE

NOTES

ASSUMED LIVE LOAD = HL-93 OR ALTERNATE LOADING.

THIS BRIDGE HAS BEEN DESIGNED IN ACCORDANCE WITH THE REQUIREMENTS OF THE AASTHO LRFD BRIDGE DESIGN SPECIFICATIONS FOR SEISMIC PERFORMANCE ZONE 1.

REMOVAL OF THE EXISTING BRIDGE SHALL BE PERFORMED SO AS NOT TO ALLOW DEBRIS TO FALL INTO THE WATER. THE CONTRACTOR SHALL REMOVE THE BRIDGE AND SUBMIT PLANS FOR DEMOLITION IN ACCORDANCE WITH ARTICLE 402-2 OF THE STANDARD SPECIFICATIONS.

THE MATERIAL SHOWN IN THE CROSS-HATCHED AREA SHALL BE EXCAVATED FOR A DISTANCE OF 25 FT. EACH SIDE OF CENTERLINE ROADWAY AS DIRECTED BY THE ENGINEER. THIS WORK WILL BE PAID FOR AT THE CONTRACT LUMP SUM PRICE FOR UNCLASSIFIED STRUCTURE EXCAVATION. SEE SECTION 412 OF THE STANDARD SPECIFICATIONS.

THE SUBSTRUCTURE OF THE EXISTING BRIDGE INDICATED ON THE PLANS IS FROM THE BEST INFORMATION AVAILABLE. SINCE THIS INFORMATION IS SHOWN FOR THE CONVENIENCE OF THE CONTRACTOR, THE CONTRACTOR SHALL HAVE NO CLAIM WHATSOEVER AGAINST THE DEPARTMENT OF TRANSPORTATION FOR ANY DELAYS OR ADDITIONAL COST INCURRED BASED ON DIFFERENCES BETWEEN THE EXISTING BRIDGE SUBSTRUCTURE SHOWN ON THE PLANS AND THE ACTUAL CONDITIONS AT THE PROJECT SITE.

AFTER SERVING AS A TEMPORARY STRUCTURE THE EXISTING STRUCTURE CONSISTING OF 1 @ 18'-0" RC SLAB ON TIMBER JOISTS SPAN WITH A CLEAR ROADWAY WIDTH OF 28'-0" SUPPORTED BY TIMBER CAP AND PILE END BENTS AND LOCATED AT THE PROPOSED STRUCTURE SHALL BE REMOVED. THE EXISTING BRIDGE IS PRESENTLY NOT POSTED FOR LOAD LIMIT. SHOULD THE STRUCTURAL INTEGRITY OF THE BRIDGE DETERIORATE DURING CONSTRUCTION OF THE PROPOSED BRIDGE, A LOAD LIMIT MAY BE POSTED AND MAY BE REDUCED AS FOUND NECESSARY DURING THE LIFE OF THE PROJECT.

THIS STRUCTURE HAS BEEN DESIGNED IN ACCORDANCE WITH HEC 18, "EVALUATING SCOUR AT BRIDGES", MAY, 2001.

FOR GROUT FOR STRUCTURES, SEE SPECIAL PROVISIONS.

FOR CRANE SAFETY, SEE SPECIAL PROVISIONS.

FOR FALSEWORK AND FORMWORK, SEE SPECIAL PROVISIONS.

FOR OTHER DESIGN DATA AND GENERAL NOTES, SEE SHEET SN.

FOR SUBMITTAL OF WORKING DRAWINGS, SEE SPECIAL PROVISIONS.

FOR EROSION CONTROL MEASURES SEE EROSION CONTROL PLANS.

FOUNDATION NOTES

PILES AT END BENTS 1 AND 2 ARE DESIGNED FOR A FACTORED RESISTANCE OF 80 TONS PER PILE.

DRIVE PILES AT END BENTS 1 AND 2 TO A REQUIRED DRIVING RESISTANCE OF 135 TONS PER PILE.

IT HAS BEEN ESTIMATED THAT A HAMMER WITH AN EQUIVALENT RATED ENERGY IN THE RANGE OF 20 TO 45 FT-KIPS PER BLOW WILL BE REQUIRED TO DRIVE PILES AT END BENTS 1 AND 2. THIS ESTIMATED ENERGY RANGE DOES NOT RELEASE THE CONTRACTOR FROM PROVIDING DRIVING EQUIPMENT IN ACCORDANCE WITH SUB ARTICLE 450-3(D)(2) OF THE STANDARD SPECIFICATIONS.

TESTING PILES WITH THE PDA DURING DRIVING, RESTRIKING, OR REDRIVING MAY BE REQUIRED. THE ENGINEER WILL DETERMINE THE NEED FOR PDA TESTING. FOR PDA TESTING, SEE SECTION 405 OF THE STANDARD SPECIFICATIONS (AND FOR PILE DRIVING CRITERIA, SEE PILE DRIVING CRITERIA PROVISION).

FOR PILES, SEE SECTION 450 OF THE STANDARD SPECIFICATIONS.

TOTAL BILL OF MATERIAL

	REMOVAL OF EXISTING STRUCTURE AT STA 13+05.93 -L-	UNCLASSIFIED STRUCTURE EXCAVATION	BRIDGE APPROACH SLABS	HP 14 X 73 STEEL PILES		RIP RAP CLASS II (2'-0" THICK)	GEOTEXTILE FOR DRAINAGE	CONSTRUCTION OF SUBSTRUCTURE	CONSTRUCTION OF SUPERSTRUCTURE
	LUMP SUM	LUMP SUM	LUMP SUM	NO.	LIN. FT.	TONS	SQ. YARDS	LUMP SUM	LUMP SUM
SUPERSTRUCTURE									
END BENT 1				5	325	60	65		
END BENT 2				5	350	60	65		
TOTAL	LUMP SUM	LUMP SUM	LUMP SUM	10	675	120	130	LUMP SUM	LUMP SUM

Prepared by
URS
URS Corporation - North Carolina
1600 Perimeter Park Drive, Suite 400
Morrisville, NC 27560
PHONE: 919) 461-1100 FAX(919) 461-1415
NC LIC.# C-2243

NORTH CAROLINA PROFESSIONAL SEAL 030521 ENGINEER CARLDON HALL JR.
5/01/13

PROJECT NO. 17BP.1.R.9
DARE COUNTY
STATION: 13+05.93 -L-

SHEET 2 OF 2 REPLACES BRIDGE NO. 42

STATE OF NORTH CAROLINA
DEPARTMENT OF TRANSPORTATION
RALEIGH

GENERAL DRAWING FOR BRIDGE ON SR 1123 OVER CANAL

BETWEEN SR 1127 AND SR 1124

REVISIONS						SHEET NO.
NO.	BY:	DATE:	NO.	BY:	DATE:	2
1			3			TOTAL SHEETS
2			4			28

DRAWN BY : K.H. COMPTON DATE : 8/16/12
CHECKED BY : M.K. TOM DATE : 8/20/12

4/30/2013
N:\Dare Bridge 042\Structures\Final Drawings\270042_SD_GD2.dgn
kyle_compton

LOAD AND RESISTANCE FACTOR RATING (LRFD) SUMMARY FOR PRESTRESSED CONCRETE GIRDERS

LEVEL		VEHICLE	WEIGHT (W) (TONS)	CONTROLLING LOAD RATING	MINIMUM RATING FACTORS (RF)	TONS = W X RF	STRENGTH I LIMIT STATE											SERVICE III LIMIT STATE							COMMENT NUMBER
								MOMENT					SHEAR						MOMENT						
							LIVELOAD FACTORS	DISTRIBUTION FACTORS (DF)	RATING FACTOR	SPAN	GIRDER LOCATION	DISTANCE FROM LEFT END OF SPAN (ft)	DISTRIBUTION FACTORS (DF)	RATING FACTOR	SPAN	GIRDER LOCATION	DISTANCE FROM LEFT END OF SPAN (ft)	LIVELOAD FACTORS	DISTRIBUTION FACTORS (DF)	RATING FACTOR	SPAN	GIRDER LOCATION	DISTANCE FROM LEFT END OF SPAN (ft)	
DESIGN LOAD RATING		HL-93(Inv)	N/A	(1)	1.394	--	1.75	0.276	1.57	50'	EL	24.5	0.531	**1.39**	50'	EL	**2.45**	0.80	0.276	1.44	50'	EL	24.5	
		HL-93(Opr)	N/A	--	1.807	--	1.35	0.276	2.03	50'	EL	24.5	0.531	1.81	50'	EL	2.45	N/A	--	--	--	--	--	
		HS-20(Inv)	36.000	(2)	1.667	60.007	1.75	0.276	1.95	50'	EL	24.5	0.531	**1.67**	50'	EL	**2.45**	0.80	0.276	1.79	50'	EL	24.5	
		HS-20(Opr)	36.000	--	2.161	77.787	1.35	0.276	2.52	50'	EL	24.5	0.531	2.16	50'	EL	2.45	N/A	--	--	--	--	--	
LEGAL LOAD RATING	SV	SNSH	13.500	--	3.635	49.079	1.40	0.276	4.95	50'	EL	24.5	0.531	4.70	50'	EL	2.45	0.80	0.276	3.64	50'	EL	24.5	
		SNGARBS2	20.000	--	2.871	57.42	1.40	0.276	3.91	50'	EL	24.5	0.531	3.42	50'	EL	2.45	0.80	0.276	2.87	50'	EL	24.5	
		SNAGRIS2	22.000	--	2.778	61.109	1.40	0.276	3.78	50'	EL	19.6	0.531	3.21	50'	EL	2.45	0.80	0.276	2.78	50'	EL	24.5	
		SNCOTTS3	27.250	--	1.814	49.418	1.40	0.276	2.47	50'	EL	24.5	0.531	2.36	50'	EL	2.45	0.80	0.276	1.81	50'	EL	24.5	
		SNAGGRS4	34.925	--	1.577	55.063	1.40	0.276	2.15	50'	EL	24.5	0.531	2.01	50'	EL	2.45	0.80	0.276	1.58	50'	EL	24.5	
		SNS5A	35.550	--	1.537	54.657	1.40	0.276	2.09	50'	EL	24.5	0.531	2.07	50'	EL	2.45	0.80	0.276	1.54	50'	EL	24.5	
		SNS6A	39.950	--	1.438	57.43	1.40	0.276	1.96	50'	EL	24.5	0.531	1.91	50'	EL	2.45	0.80	0.276	1.44	50'	EL	24.5	
		SNS7B	42.000	--	1.370	57.54	1.40	0.276	1.87	50'	EL	24.5	0.531	1.91	50'	EL	2.45	0.80	0.276	1.37	50'	EL	24.5	
	TTST	TNAGRIT3	33.000	--	1.761	58.118	1.40	0.276	2.40	50'	EL	24.5	0.531	2.25	50'	EL	2.45	0.80	0.276	1.76	50'	EL	24.5	
		TNT4A	33.075	--	1.777	58.759	1.40	0.276	2.42	50'	EL	24.5	0.531	2.17	50'	EL	2.45	0.80	0.276	1.78	50'	EL	24.5	
		TNT6A	41.600	--	1.480	61.558	1.40	0.276	2.01	50'	EL	24.5	0.531	2.08	50'	EL	2.45	0.80	0.276	1.48	50'	EL	24.5	
		TNT7A	42.000	--	1.502	63.087	1.40	0.276	2.05	50'	EL	24.5	0.531	1.94	50'	EL	2.45	0.80	0.276	1.50	50'	EL	24.5	
		TNT7B	42.000	--	1.566	65.773	1.40	0.276	2.13	50'	EL	24.5	0.531	1.84	50'	EL	2.45	0.80	0.276	1.57	50'	EL	24.5	
		TNAGRIT4	43.000	--	1.486	63.902	1.40	0.276	2.02	50'	EL	24.5	0.531	1.77	50'	EL	2.45	0.80	0.276	1.49	50'	EL	24.5	
		TNAGT5A	45.000	--	1.388	62.47	1.40	0.276	1.89	50'	EL	24.5	0.531	1.80	50'	EL	2.45	0.80	0.276	1.39	50'	EL	24.5	
		TNAGT5B	45.000	(3)	1.360	61.206	1.40	0.276	1.85	50'	EL	24.5	0.531	1.68	50'	EL	2.45	0.80	0.276	**1.36**	50'	EL	**24.5**	

LOAD FACTORS:

DESIGN LOAD RATING FACTORS	LIMIT STATE	γ_{DC}	γ_{DW}
	STRENGTH I	1.25	1.50
	SERVICE III	1.00	1.00

NOTES:

MINIMUM RATING FACTORS ARE BASED ON THE STRENGTH I AND SERVICE III LIMIT STATES.

ALLOWABLE STRESSES FOR SERVICE III LIMIT STATE ARE AS REQUIRED FOR DESIGN.

COMMENTS:

1.
2.
3.
4.

(#) CONTROLLING LOAD RATING
(1) DESIGN LOAD RATING (HL-93)
(2) DESIGN LOAD RATING (HS-20)
(3) LEGAL LOAD RATING **
** SEE CHART FOR VEHICLE TYPE

GIRDER LOCATION
I - INTERIOR GIRDER
EL - EXTERIOR LEFT GIRDER
ER - EXTERIOR RIGHT GIRDER

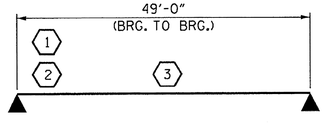

LRFR SUMMARY

FOR SPAN 'A'

PROJECT NO. 17BP.1.R.9

DARE COUNTY

STATION: 13+05.93 -L-

STATE OF NORTH CAROLINA
DEPARTMENT OF TRANSPORTATION
RALEIGH

STANDARD

LRFR SUMMARY FOR 50' CORED SLAB UNIT 90° SKEW
(NON-INTERSTATE TRAFFIC)

NORTH CAROLINA PROFESSIONAL SEAL 14045 ENGINEER TIMOTHY K. COGGINS
11/19/13

REVISIONS						SHEET NO.
NO.	BY:	DATE:	NO.	BY:	DATE:	3
1			3			TOTAL SHEETS
2			4			28

ASSEMBLED BY : B. L. GREEN	DATE : 11/7/12	
CHECKED BY : N. RUFFIN	DATE : 12/17/12	
DRAWN BY : CVC 6/10		
CHECKED BY : DNS 6/10		

15-JAN-2013 12:12
S:\DPG1\Tim\Division 1 LIBR\17BP.1.R.9\bgreen\17BP.1.R.9_SD_CS.dgn
tcoggins

STD. NO. 21LRFR1_90S_50L

WBS # 17BP.1.R.9

CONTRACT #:

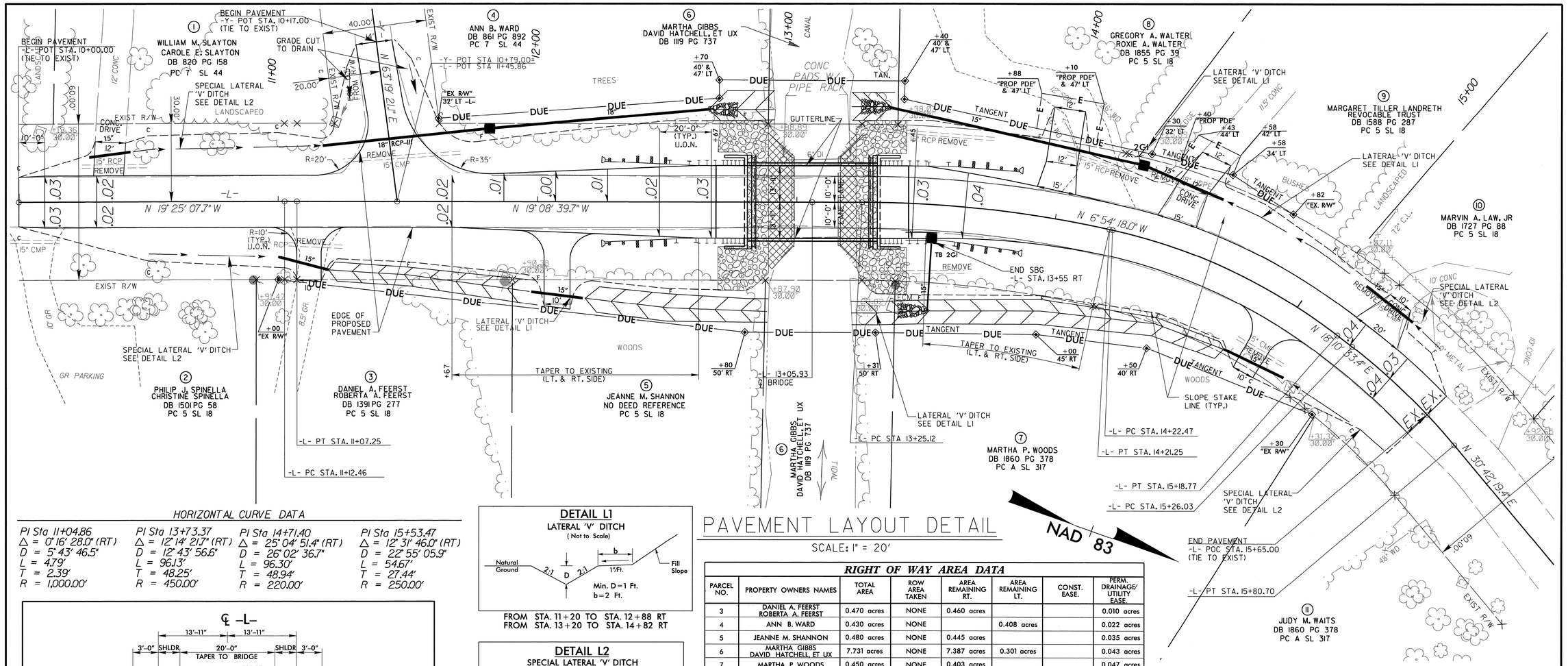

PAVEMENT LAYOUT DETAIL

SCALE: 1" = 20'

HORIZONTAL CURVE DATA

PI Sta 11+04.86	PI Sta 13+73.37	PI Sta 14+71.40	PI Sta 15+53.47
Δ = 0° 16' 28.0" (RT)	Δ = 12° 14' 21.7" (RT)	Δ = 25° 04' 51.4" (RT)	Δ = 12° 31' 46.0" (RT)
D = 5° 43' 46.5"	D = 12° 43' 56.6"	D = 26° 02' 36.7"	D = 22° 55' 05.9"
L = 4.79'	L = 96.13'	L = 96.30'	L = 54.67'
T = 2.39'	T = 48.25'	T = 48.94'	T = 27.44'
R = 1,000.00'	R = 450.00'	R = 220.00'	R = 250.00'

DETAIL L1
LATERAL 'V' DITCH
(Not to Scale)

FROM STA. 11+20 TO STA. 12+88 RT
FROM STA. 13+20 TO STA. 14+82 RT

DETAIL L2
SPECIAL LATERAL 'V' DITCH
(Not to Scale)

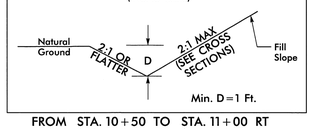

FROM STA. 10+50 TO STA. 11+00 RT
FROM STA. 10+50 TO STA. 11+17 LT
FROM STA. 12+66 TO STA. 12+91 LT
FROM STA. 13+21 TO STA. 13+35 LT
FROM STA. 14+59 TO STA. 15+16 LT
FROM STA. 15+38 TO STA. 15+65 LT
FROM STA. 15+11 TO STA. 15+50 RT

℄ –L–

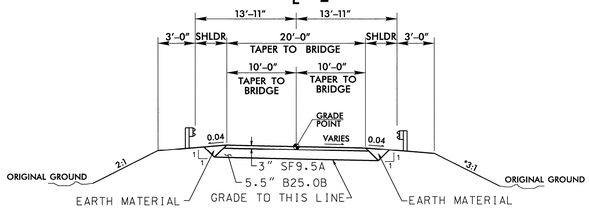

FULL DEPTH PAVEMENT

FROM –L– STA. 10+75.00 TO BEGIN BRIDGE
FROM END BRIDGE TO –L– STA. 15+25.00

* USE 2:1
FROM –L– STA. 10+75 TO –L– STA. 11+20 RT AND
FROM –L– STA. 15+11 TO –L– STA. 15+25 RT

℄ –L–

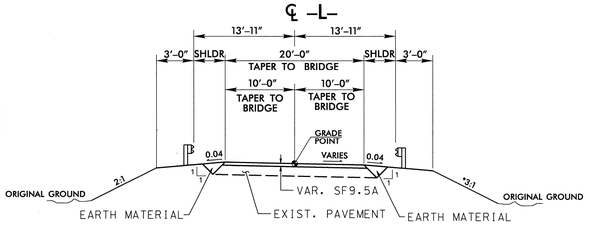

WEDGING

FROM –L– STA. 10+00.00 TO –L– STA. 10+75.00
FROM –L– STA. 15+25.00 TO –L– STA. 15+65.00

* USE 2:1
FROM –L– STA. 10+50 TO –L– STA. 10+75 RT AND
FROM –L– STA. 15+25 TO –L– STA. 15+50 RT

℄ –Y–

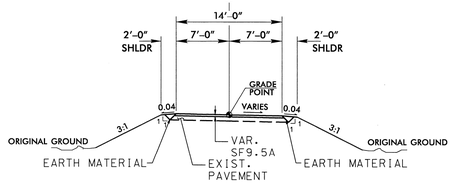

WEDGING

FROM –Y– STA. 10+17.00 TO –Y– STA. 10+68.91

TYPICAL ROADWAY SECTION

WITHIN CONSTRUCTION LIMITS

RIGHT OF WAY AREA DATA

PARCEL NO.	PROPERTY OWNERS NAMES	TOTAL AREA	ROW AREA TAKEN	AREA REMAINING RT.	AREA REMAINING LT.	CONST. EASE.	PERM. DRAINAGE/ UTILITY EASE.
3	DANIEL A. FEERST ROBERTA A. FEERST	0.470 acres	NONE	0.460 acres			0.010 acres
4	ANN B. WARD	0.430 acres	NONE		0.408 acres		0.022 acres
5	JEANNE M. SHANNON	0.480 acres	NONE	0.445 acres			0.035 acres
6	MARTHA GIBBS DAVID HATCHELL, ET UX	7.731 acres	NONE	7.387 acres	0.301 acres		0.043 acres
7	MARTHA P. WOODS	0.450 acres	NONE	0.403 acres			0.047 acres
8	GREGORY A. WALTER ROXIE A. WALTER	0.650 acres	NONE		0.632 acres	0.008 acres	0.010 acres
9	MARGARET TILLER LANDRETH REVOCABLE TRUST	0.390 acres	NONE		0.383 acres	0.004 acres	0.003 acres

DRAINAGE SUMMARY

Note: Invert Elevations indicated are for Bid Purposes only and shall not be used for project construction stakeout.

STATION	SIZE / THICKNESS OR GAUGE	LOCATION (LT. RT. OR CL)'	STRUCTURE NO. FROM	STRUCTURE NO. TO	TOP ELEVATION	INVERT ELEVATION	INVERT ELEVATION	SLOPE CRITICAL	DRAINAGE PIPE (RCP, CSP, CAAP, HDPE, or PVC) 15"	DO NOT USE RCP	DO NOT USE CSP	DO NOT USE CAAP	DO NOT USE HDPE	R.C. PIPE CLASS III 18"	15" SIDE DRAIN PIPE	QUANTITIES FOR DRAINAGE STRUCTURES PER EACH (0' THRU 5.0')	5.0' THRU 10.0'	*TOTAL L.F. FOR PAY QUANTITY SHALL BE COL. 'A' + (1.3 X COL. 'B') LIN. FT. A	10.0' AND ABOVE B	G.D.I. TYPE "D" STD. 840.19 OR 840.28	G.D.I. (N.S.) FRAME WITH TWO GRATES STD. 840.29	T.B.G.D.I. STD. 840.35
L 13+53		RT	0401		8.19											1					1	1
			0401	0402		4.19	-0.30		28	X	X											
L 11+17		LT	0403	0404		0.18	-0.17							64								
L 11+82		LT	0404		2.00											1				1	1	
			0404	0405		-0.17	-0.50		88		X											
L 14+59		LT	0406	0407		0.18	0.04		36		X											
L 14+28		LT	0407		2.70											1				1	1	
			0407	0408		0.04	-0.30		104		X											
L 10+35		LT													16							
L 11+10		RT													20							
L 12+05		RT													20							
L 14+95		RT													26							
L 15+25		LT													24							
TOTALS									256					64	106	3				2	3	1

DATUM DESCRIPTION

THE LOCALIZED COORDINATE SYSTEM DEVELOPED FOR THIS PROJECT IS BASED ON THE STATE PLANE COORDINATES ESTABLISHED BY JOYNER KEENY FOR MONUMENT "BL-2" WITH NAD 83/CORS 96 STATE PLANE GRID COORDINATES OF NORTHING: 801382.32(ft) EASTING: 2978409.66(ft) ELEVATION: 7.81(ft)
THE AVERAGE COMBINED GRID FACTOR USED ON THIS PROJECT (GROUND TO GRID) IS: 0.999943646
ALL LINEAR DIMENSIONS ARE LOCALIZED HORIZONTAL DISTANCES
VERTICAL DATUM USED IS NAVD 88

Prepared by
URS
URS Corporation – North Carolina
1600 Perimeter Park Drive, Suite 400
Morrisville, NC 27560
PHONE: (919) 461-1100 FAX: (919) 461-1415
NC LIC. # C-2243

PROJECT: 17BP.1.R.9

DARE COUNTY

STATION: 13+05.93 -L-

REPLACES BRIDGE NO. 270042

STATE OF NORTH CAROLINA
DEPARTMENT OF TRANSPORTATION
RALEIGH

ROADWAY DETAILS

27'-10" CLEAR ROADWAY - 90° SKEW

DRAWN BY: LHM DATE: 04/24/13
CHECKED BY: DCS DATE: 04/24/13

HYDRAULICS ENGINEER

NORTH CAROLINA PROFESSIONAL SEAL 10746 ENGINEER DENNIS K. HOYLE

NORTH CAROLINA PROFESSIONAL SEAL 21656 ENGINEER ROGER S. WEAKLEY

REVISIONS						SHEET NO.
NO.	BY:	DATE:	NO.	BY:	DATE:	4
1			1			TOTAL SHEETS
2			2			28

TRAFFIC MANAGEMENT FOR TEMPORARY ROAD CLOSURE

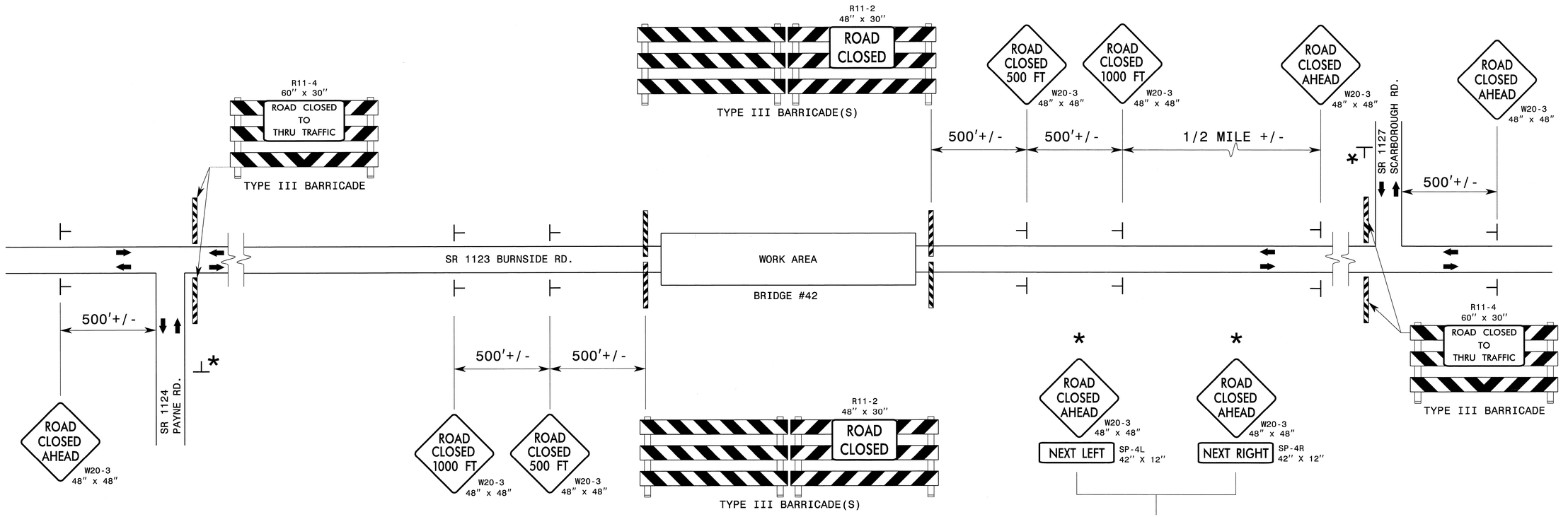

LEGEND

- DIRECTION OF TRAFFIC FLOW
- STATIONARY SIGN
- BARRICADE (TYPE III)

ROADWAY STANDARD DRAWINGS

THE FOLLOWING ROADWAY STANDARDS AS SHOWN IN "ROADWAY STANDARD DRAWINGS" - PROJECT SERVICES UNIT - N.C. DEPARTMENT OF TRANSPORTATION - RALEIGH N.C., ARE CONSIDERED A PART OF THE PLANS:

STD. NO.	TITLE
1101.03	TEMPORARY ROAD CLOSURES
1101.04	TEMPORARY SHOULDER CLOSURES
1110.01	STATIONARY WORK ZONE SIGNS
1110.02	PORTABLE WORK ZONE SIGNS
1135.01	CONES
1145.01	BARRICADES
904.10	ORIENTATION OF GROUND MOUNTED SIGNS

GENERAL NOTES

1 - INSTALLATION OF TEMPORARY ROUTE MARKERS, DESTINATION SIGNS AND ANY NECESSARY MODIFICATIONS TO EXISTING OR PROPOSED REGULATORY OR WARNING SIGNS WILL BE MADE BY OTHERS (STATE OR CITY FORCES) UNLESS OTHERWISE DESIGNATED IN PLANS. PROVIDE A MINIMUM 21 CALENDAR DAY NOTICE TO STATE FORCES BEFORE A ROADWAY IS CLOSED TO TRAFFIC SUCH THAT NECESSARY PROVISIONS CAN BE MADE TO INFORM LOCAL EMERGENCY AND LAW ENFORCEMENT PERSONNEL, SCHOOLS OR ANY OTHER PARTIES AFFECTED BY THE ROAD CLOSURE.

2 - INSTALL SIGNS BEFORE THE BARRICADES WHEN CLOSING THE ROADWAY TO TRAFFIC. REMOVE BARRICADES BEFORE SIGNS WHEN OPENING THE ROADWAY TO TRAFFIC. INSTALL/REMOVE SIGNS AND BARRICADES WITHIN THE SAME CALENDAR DAY.

3 - POSITION WING BARRICADES ON THE SHOULDERS AND SLOPE THE STRIPES DOWNWARD IN THE DIRECTION TOWARD WHICH TRAFFIC MUST TURN IN DETOURING.

4 - USE ADDITIONAL TYPE III BARRICADES IN STAGGERED LOCATIONS SUPPLEMENTED WITH SIGN R11-4 "ROAD CLOSED TO THRU TRAFFIC" IN THE EVENT THAT TRAFFIC MUST BE MAINTAINED BEYOND THE DETOUR POINT.

5 - SEE STANDARD SPECIFICATION 1089-1 FOR WORK ZONE SIGNS.

6 - SEE STANDARD SPECIFICATION 1089-2 FOR WORK ZONE SIGN SUPPORTS.

Prepared by
URS
URS Corporation - North Carolina
1600 Perimeter Park Drive, Suite 400
Morrisville, NC 27560
PHONE: (919) 461-1100 FAX: (919) 461-1415
NC LIC. # C-2243

PROJECT: 17BP.1.R.9
DARE COUNTY
STATION: 13+05.93 -L-
REPLACES BRIDGE NO. 270042

STATE OF NORTH CAROLINA
DEPARTMENT OF TRANSPORTATION
RALEIGH

TRAFFIC MANAGEMENT PLAN

27'-10" CLEAR ROADWAY - 90° SKEW

NORTH CAROLINA PROFESSIONAL SEAL 032074 ENGINEER DENA C. SNEAD 5/13/13

REVISIONS						SHEET NO.
NO.	BY:	DATE:	NO.	BY:	DATE:	5
1			1			TOTAL SHEETS
2			2			28

DRAWN BY: LHM DATE: 11/20/12
CHECKED BY: DCS DATE: 11/26/12

WBS # 17BP.1.R.9

CONTRACT #:

8/23/99

0 2.5 5	PROJ. REFERENCE NO.	SHEET NO.
	17BP.1.R.9	6

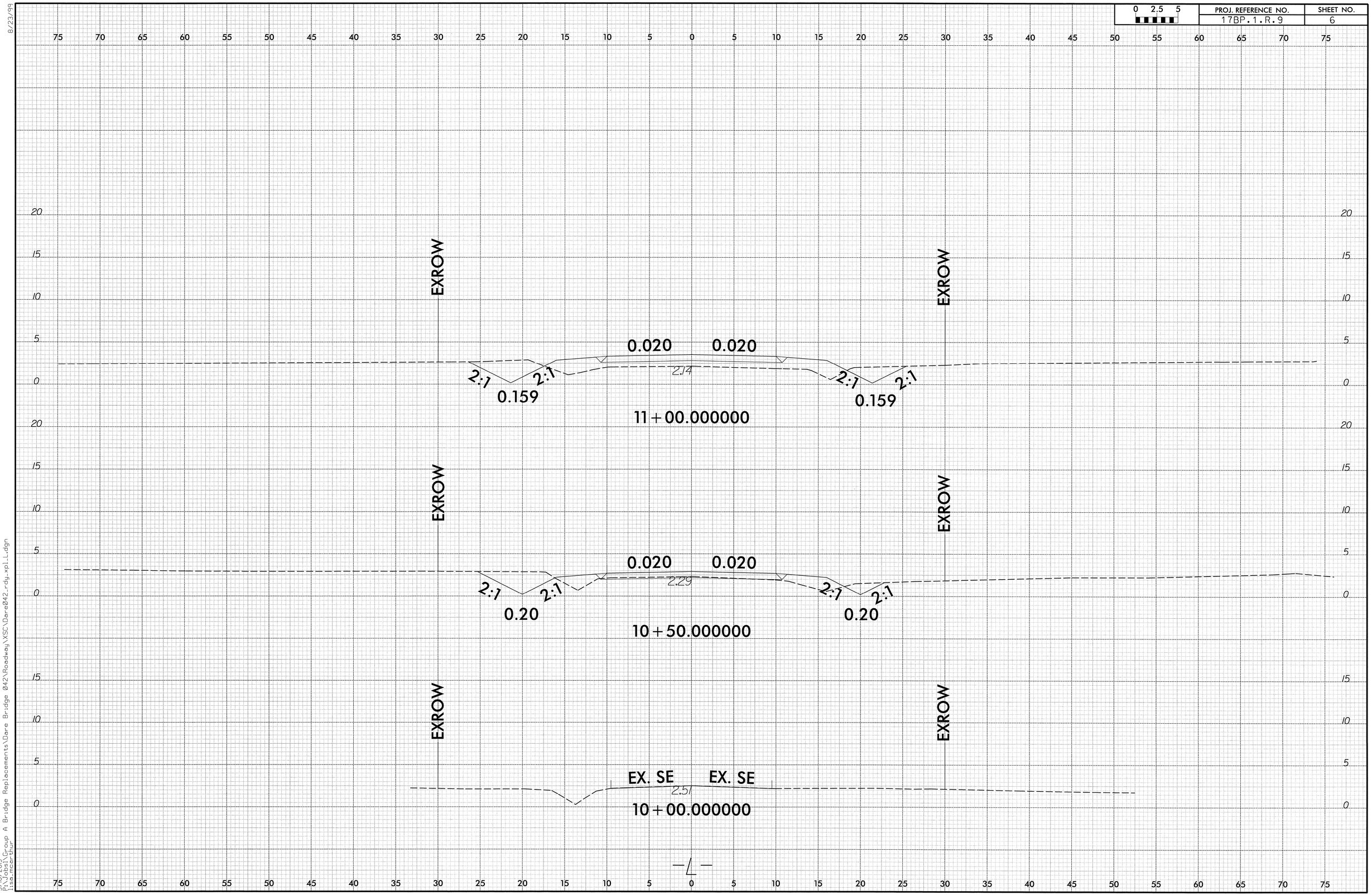

5/10/2013
P:\Design\Group A Bridge Replacements\Dare Bridge 042\Roadway\XSC\Dare042_rdy_xpl_L.dgn
lisa.mcarthur

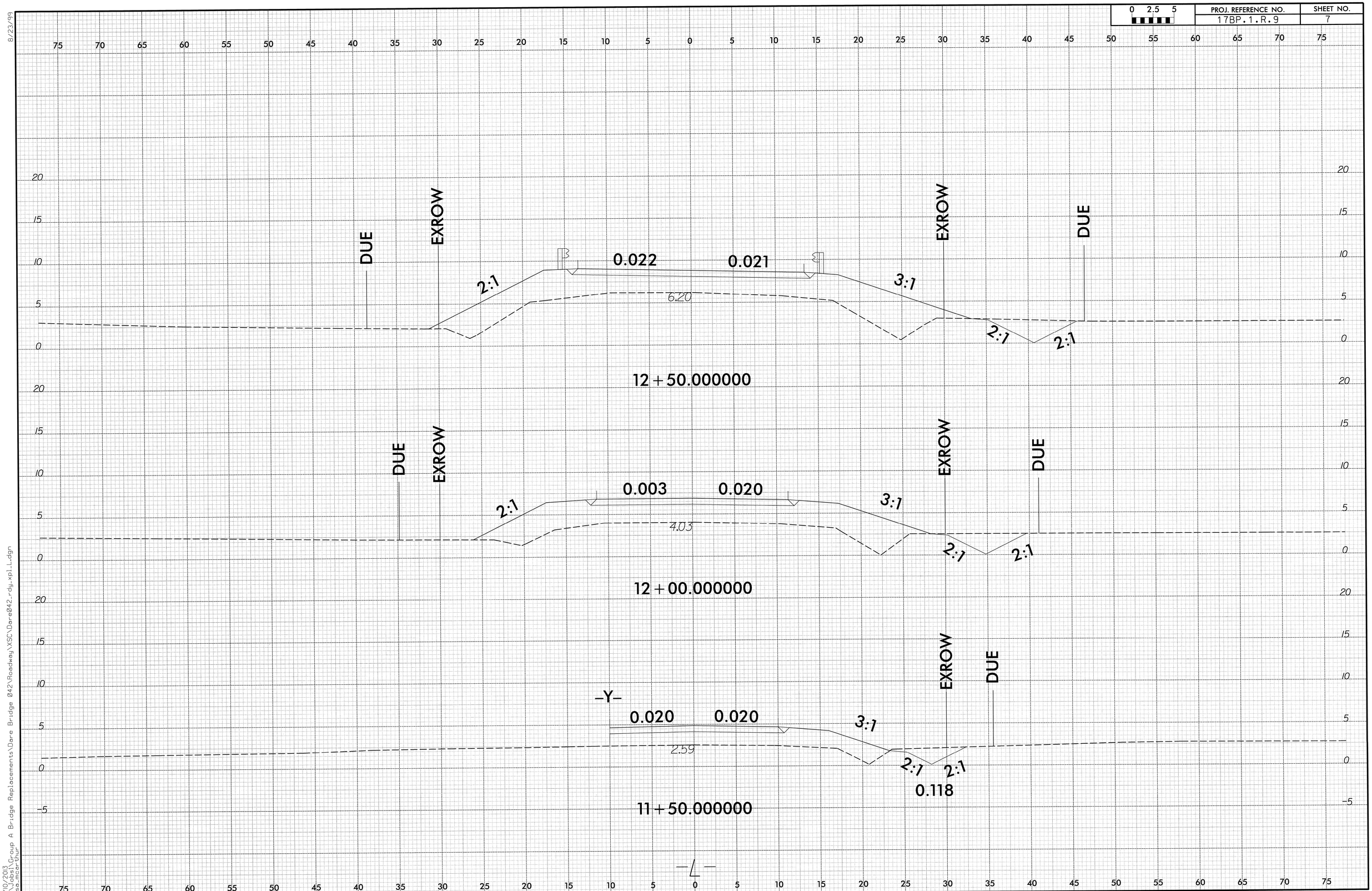

8/23/99

5/10/2013
P:\Jobs\Group A Bridge Replacements\Dare Bridge 042\Roadway\XSC\Dare042_rdy_xpl_L.dgn
lisa_mcarthur

8/23/99

0 2.5 5	PROJ. REFERENCE NO.	SHEET NO.
	17BP.1.R.9	8

75 70 65 60 55 50 45 40 35 30 25 20 15 10 5 0 5 10 15 20 25 30 35 40 45 50 55 60 65 70 75

20 15 10 5 0

DUE EXROW EXROW DUE

0.030 0.030

8.04

2:1 2:1 2:1 2:1

13 + 31.101200

15 10 5 0 20

DUE EXROW EXROW DUE

0.030 0.030

0.37

13 + 00.000000

15 10 5 0 20

DUE EXROW EXROW DUE

0.030 0.030

7.61

2:1 2:1 2:1 2:1

12 + 80.942900

75 70 65 60 55 50 45 40 35 30 25 20 15 10 5 0 5 10 15 20 25 30 35 40 45 50 55 60 65 70 75

5/10/2013
P:\Group A Bridge Replacements\Dare Bridge 042\Roadway\XSC\Dare042_rdy_xpl.L.dgn
lisa.mcarthur

8/23/99

0 2.5 5	PROJ. REFERENCE NO.	SHEET NO.
	17BP.1.R.9	9

75 70 65 60 55 50 45 40 35 30 25 20 15 10 5 0 5 10 15 20 25 30 35 40 45 50 55 60 65 70 75

20 15 10 5 0

DUE EXROW

DRIVEWAY 0.040 0.040 3:1

3.30

2:1 2:1

EXROW DUE

14+50.000000

DUE EXROW

DRIVEWAY 0.040 0.040 3:1

5.16

2:1 2:1

EXROW DUE

14+00.000000

DUE EXROW

2:1 0.032 0.033 3:1

7.54

2:1 2:1

EXROW DUE

13+50.000000

5/10/2013
P:\Jobs\Group A Bridge Reolacements\Dare Bridge 042\Roadway\XSC\Dare042_rdy_xpl.l.dgn
lisa.mcarthur

8/23/99

0 2.5 5	PROJ. REFERENCE NO.	SHEET NO.
	17BP.1.R.9	10

75 70 65 60 55 50 45 40 35 30 25 20 15 10 5 0 5 10 15 20 25 30 35 40 45 50 55 60 65 70 75

20 15 10 5 0 20

EXROW EXROW

EX. SE EX. SE

2.57

15+65.000000

EXROW EXROW

2:1 0.029 0.042

2.63

2:1 2.24:1

-0.301

15+50.000000

EXROW EXROW DUE

2:1 0.040 0.040

2.79

3:1 2:1

-0.30

15+00.000000

75 70 65 60 55 50 45 40 35 30 25 20 15 10 5 0 5 10 15 20 25 30 35 40 45 50 55 60 65 70 75

5/10/2013
P:\Jobs\Group A Bridge Replacements\Dare Bridge 042\Roadway\XSC\Dare042_rdy_xpl_L.dgn
lisa.mcarthur

8/23/99

0 2.5 5	PROJ. REFERENCE NO.	SHEET NO.
	17BP.1.R.9	11

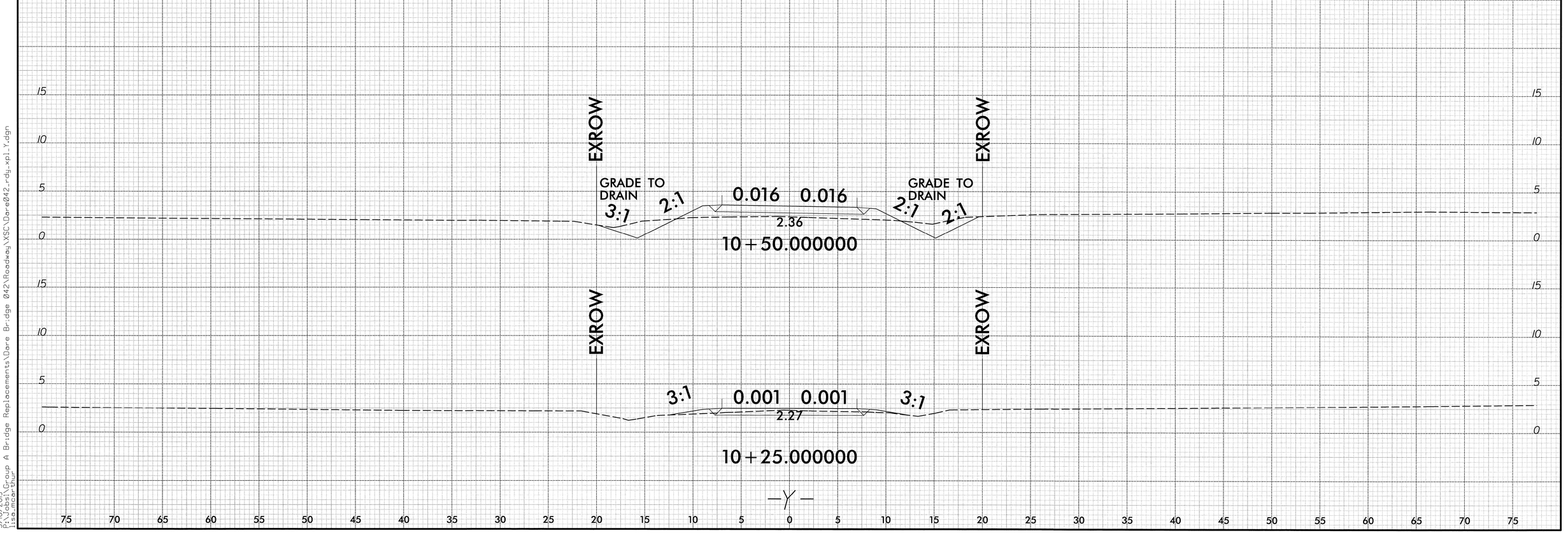

5/10/2013
P:\Jobs\Group A Bridge Replacements\Dare Bridge 042\Roadway\XSC\Dar0042_rdy_xpl_Y.dgn
lisa.mcarthur

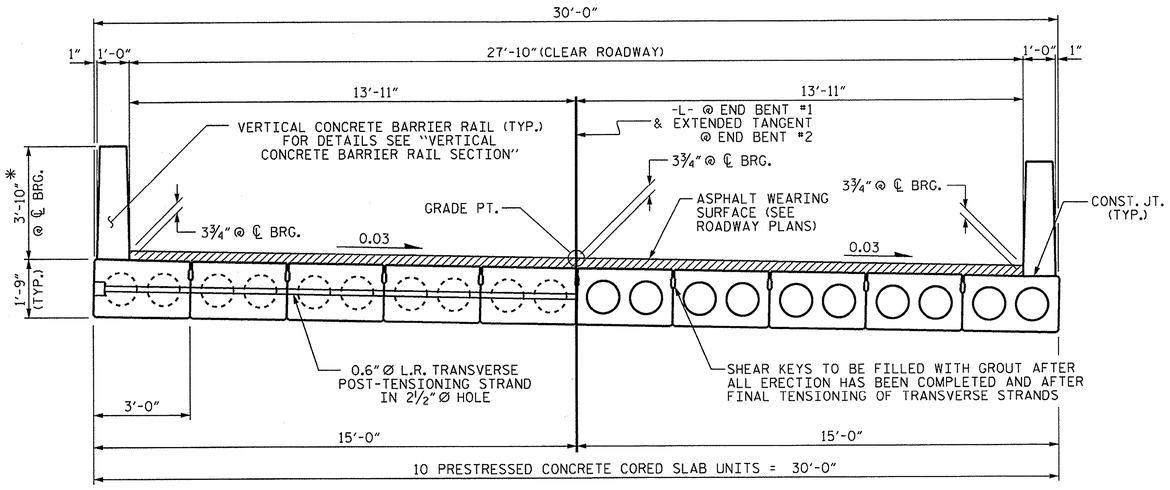

HALF SECTION
AT INTERMEDIATE DIAPHRAGMS

HALF SECTION
THROUGH VOIDS

TYPICAL SECTION

* - THE MAXIMUM BARRIER RAIL HEIGHT AND ASPHALT THICKNESS IS SHOWN. THE HEIGHT OF THE BARRIER RAIL AND ASPHALT THICKNESS VARIES WHILE THE TOP OF THE BARRIER RAIL FOLLOWS THE PROFILE OF THE GUTTERLINE. FOR RAIL HEIGHT DETAILS AND ASPHALT THICKNESS SEE THE "VERTICAL CONCRETE BARRIER RAIL SECTION" DETAIL.

FIXED END

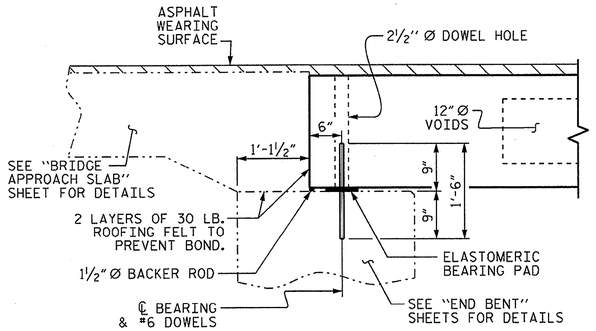

SECTION AT END BENT

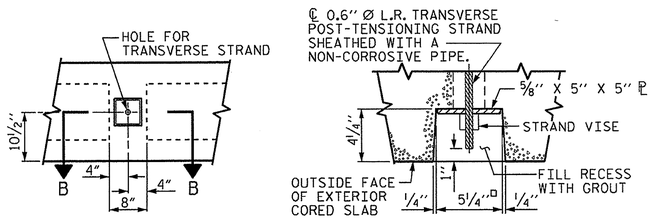

ELEVATION VIEW

SECTION B-B

GROUTED RECESS AT END OF POST-TENSIONED STRAND OF CORED SLABS

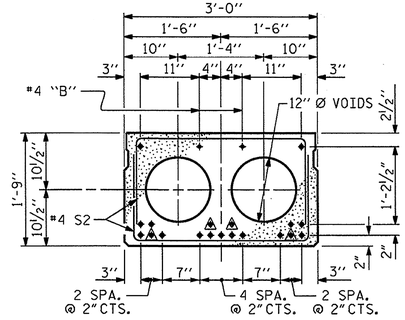

INTERIOR SLAB SECTION (50' UNIT)

(19 STRANDS REQUIRED)

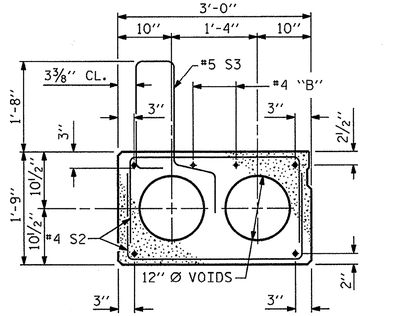

EXT. SLAB SECTION

(FOR PRESTRESSED STRAND LAYOUT, SEE INTERIOR SLAB SECTION.)

0.6" Ø LOW RELAXATION STRAND LAYOUT

▲ BOND SHALL BE BROKEN ON THESE STRANDS FOR A DISTANCE OF 6'-0" FROM END OF CORED SLAB UNIT. SEE STANDARD SPECIFICATIONS, ARTICLE 1078-7.

DEBONDING LEGEND

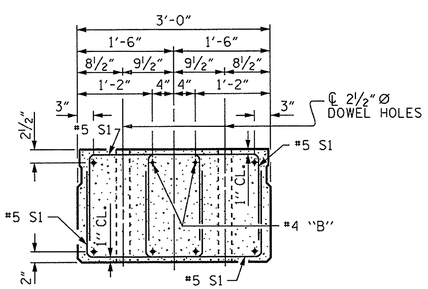

END ELEVATION

SHOWING PLACEMENT OF DOUBLE STIRRUPS AND LOCATION OF DOWEL HOLES. (STRAND LAYOUT NOT SHOWN.) INTERIOR SLAB UNIT SHOWN-EXTERIOR SLAB UNIT SIMILAR EXCEPT SHEAR KEY LOCATION.

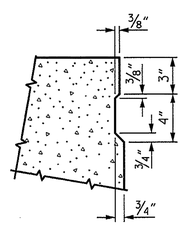

SHEAR KEY DETAIL

NOTE: OMIT SHEAR KEY ON OUTSIDE FACE OF EXTERIOR CORED SLABS.

NORTH CAROLINA PROFESSIONAL SEAL 14045 ENGINEER TIMOTHY L. COGGINS
01/15/13

PROJECT NO. 17BP.1.R.9
DARE COUNTY
STATION: 13+05.93 -L-

SHEET 1 OF 3

STATE OF NORTH CAROLINA
DEPARTMENT OF TRANSPORTATION
RALEIGH

STANDARD
3'-0" X 1'-9"
PRESTRESSED CONCRETE
CORED SLAB UNIT
90° SKEW

REVISIONS						SHEET NO.
NO.	BY:	DATE:	NO.	BY:	DATE:	12
1			3			TOTAL SHEETS
2			4			28

ASSEMBLED BY : B. L. GREEN	DATE : 11/7/12	
CHECKED BY : N. RUFFIN	DATE : 12/17/12	
DRAWN BY : DGE 5/09	REV. 12/11	MAA/AAC
CHECKED BY : BCH 6/09		

15-JAN-2013 12:12
S:\DPGI\Tim\Division 1 LIBR\17BP.1.R.9\bgreen\17BP.1.R.9_SD_CS.dgn
tcoggins

STD. NO. 21"PCS2_30_90S

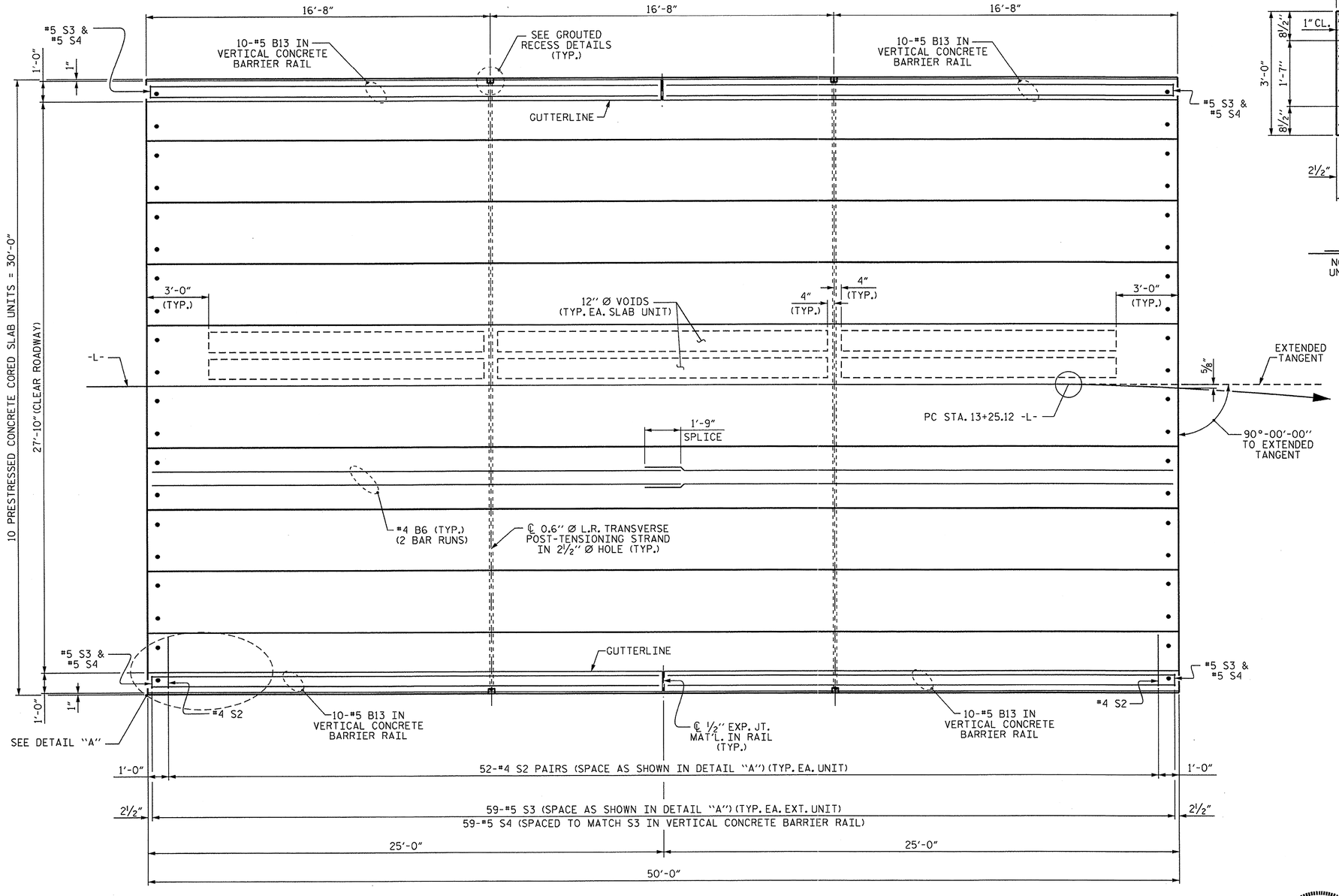

PLAN OF UNIT

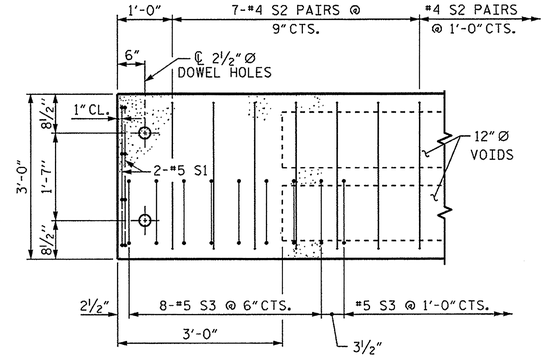

DETAIL "A"

NOTE: EXTERIOR UNIT SHOWN - INTERIOR UNIT SIMILAR EXCEPT OMIT #5 S3 BARS.

ASSEMBLED BY : B. L. GREEN	DATE : 11/7/12		
CHECKED BY : N. RUFFIN	DATE : 12/17/12		
DRAWN BY : DGE 3/09	REV. 12/5/11 MAA/AAC		
CHECKED BY : BCH 3/09			

15-JAN-2013 12:11
S:\DPG1\Tim\Division 1 LIBR\17BP.1.R.9\bgreen\17BP.1.R.9_SD_CS.dgn
tcoggins

PROJECT NO. 17BP.1.R.9

DARE COUNTY

STATION: 13+05.93 -L-

SHEET 2 OF 2

STATE OF NORTH CAROLINA
DEPARTMENT OF TRANSPORTATION
RALEIGH

PLAN OF 50' UNIT 27'-10" CLEAR ROADWAY 90° SKEW

REVISIONS						SHEET NO.
NO.	BY:	DATE:	NO.	BY:	DATE:	13
1			3			TOTAL SHEETS
2			4			28

NORTH CAROLINA PROFESSIONAL SEAL 14045 ENGINEER TIMOTHY L. COGGINS
11/15/13

STD. NO. 21"PCS_30_90S_50L

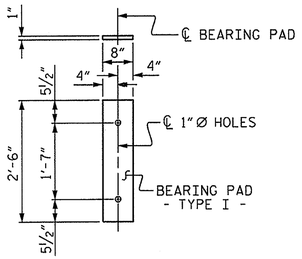

FIXED END
(TYPE I - 20 REQ'D)

ELASTOMERIC BEARING DETAILS

ELASTOMER IN ALL BEARINGS SHALL BE 50 DUROMETER HARDNESS.

BILL OF MATERIAL FOR VERTICAL CONCRETE BARRIER RAIL

BAR	BARS PER PAIR OF EXTERIOR UNITS	TOTAL NO.	SIZE	TYPE	LENGTH	WEIGHT
	50' UNIT					
*B13	40	40	#5	STR	24'-7"	1026
* S4	118	118	#5	2	7'-2"	882
*EPOXY COATED REINFORCING STEEL				LBS.		1908
CLASS AA CONCRETE				CU.YDS.		13.1
TOTAL VERTICAL CONCRETE BARRIER RAIL				LN. FT.		100.00

BILL OF MATERIAL FOR ONE 50' CORED SLAB UNIT

				EXTERIOR UNIT		INTERIOR UNIT	
BAR	NUMBER	SIZE	TYPE	LENGTH	WEIGHT	LENGTH	WEIGHT
B6	4	#4	STR	25'-9"	69	25'-9"	69
S1	8	#5	3	4'-3"	35	4'-3"	35
S2	104	#4	3	5'-4"	371	5'-4"	371
* S3	59	#5	1	6'-2"	379		
REINFORCING STEEL			LBS.		475		475
*EPOXY COATED REINFORCING STEEL			LBS.		379		
6500 P.S.I. CONCRETE			CU. YDS.		7.1		7.1
0.6"Ø L.R. STRANDS			No.		19		19

BAR TYPES

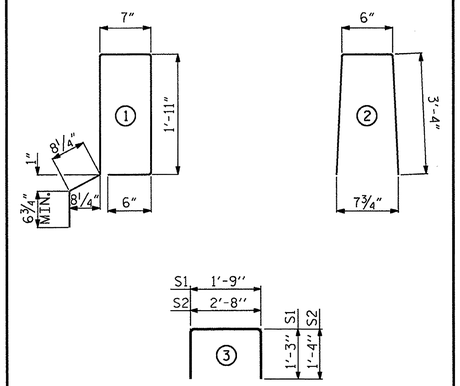

ALL BAR DIMENSIONS ARE OUT TO OUT

DEAD LOAD DEFLECTION AND CAMBER

	3'-0" x 1'-9"
50' CORED SLAB UNIT	0.6"Ø L.R. STRAND
CAMBER (SLAB ALONE IN PLACE)	2½" ↑
DEFLECTION DUE TO SUPERIMPOSED DEAD LOAD**	¼" ↓
FINAL CAMBER	2¼" ↑

** INCLUDES FUTURE WEARING SURFACE

GUTTERLINE ASPHALT THICKNESS & RAIL HEIGHT

27'-10" CLEAR ROADWAY	ASPHALT OVERLAY THICKNESS	RAIL HEIGHT
	@ MID-SPAN	@ MID-SPAN
	SUPERED SECTION	
50' UNITS	1½"	3'-7¾"

CORED SLABS REQUIRED

	NUMBER	LENGTH	TOTAL LENGTH
50' UNIT			
EXTERIOR C.S.	2	50'-0"	100'-0"
INTERIOR C.S.	8	50'-0"	400'-0"
TOTAL	10		500'-0"

NOTES

ALL PRESTRESSING STRANDS SHALL BE 7-WIRE LOW RELAXATION GRADE 270 STRANDS AND SHALL CONFORM TO AASHTO M203 EXCEPT FOR SAMPLING REQUIREMENTS WHICH SHALL BE IN ACCORDANCE WITH THE STANDARD SPECIFICATIONS.

ALL REINFORCING STEEL CAST WITH THE CORED SLAB SECTIONS SHALL BE GRADE 60 AND SHALL BE INCLUDED IN THE UNIT PRICE BID FOR PRESTRESSED CONCRETE CORED SLABS.

RECESSES FOR TRANSVERSE STRANDS SHALL BE GROUTED AFTER THE TENSIONING OF THE STRANDS.

THE 2½"Ø DOWEL HOLES AT FIXED ENDS OF SLAB SECTIONS SHALL BE FILLED WITH NON-SHRINK GROUT.

THE BACKER RODS SHALL CONFORM TO THE REQUIREMENTS OF TYPE M BOND BREAKER. SEE SECTION 1028 OF THE STANDARD SPECIFICATIONS.

WHEN CORED SLABS ARE CAST, AN INTERNAL HOLD-DOWN SYSTEM SHALL BE EMPLOYED TO PREVENT VOIDS FROM RISING OR MOVING SIDEWAYS. AT LEAST SIX WEEKS PRIOR TO CASTING CORED SLABS, THE CONTRACTOR SHALL SUBMIT TO THE ENGINEER FOR REVIEW AND COMMENT, DETAILED DRAWINGS OF THE PROPOSED HOLD-DOWN SYSTEM. IN ADDITION TO STRUCTURAL DETAILS, LOCATION AND SPACING OF THE HOLD-DOWNS SHALL BE INDICATED.

ALL REINFORCING STEEL IN THE VERTICAL CONCRETE BARRIER RAIL SHALL BE EPOXY COATED.

PRESTRESSING STRANDS SHALL BE CUT FLUSH WITH THE CORED SLAB UNIT ENDS.

APPLY EPOXY PROTECTIVE COATING TO CORED SLAB UNIT ENDS.

GROOVED CONTRACTION JOINTS, ½" IN DEPTH, SHALL BE TOOLED IN ALL EXPOSED FACES OF THE BARRIER RAIL AND IN ACCORDANCE WITH ARTICLE 825-10(B) OF THE STANDARD SPECIFICATIONS. A CONTRACTION JOINT SHALL BE LOCATED AT EACH THIRD POINT BETWEEN BARRIER RAIL EXPANSION JOINTS. ONLY ONE CONTRACTION JOINT IS REQUIRED AT MIDPOINT OF BARRIER RAIL SEGMENTS LESS THAN 20 FEET IN LENGTH AND NO CONTRACTION JOINTS ARE REQUIRED FOR THOSE SEGMENTS LESS THAN 10 FEET IN LENGTH.

TRANSVERSE POST TENSIONING OF THE CORED SLAB UNITS SHALL BE DONE IN ACCORDANCE WITH THE STANDARD SPECIFICATIONS.

THE TRANSFER OF LOAD FROM THE ANCHORAGES TO THE CORED SLAB UNIT SHALL BE DONE WHEN THE CONCRETE HAS REACHED A COMPRESSIVE STRENGTH OF NOT LESS THAN THE REQUIRED STRENGTH SHOWN IN THE "CONCRETE RELEASE STRENGTH" TABLE.

PRESTRESSED CONCRETE CORED SLAB UNITS ARE DESIGNED FOR 0 PSI TENSION IN THE PRECOMPRESSED TENSILE ZONE UNDER ALL LOADING CONDITIONS.

PRESTRESSED CONCRETE CORED SLAB UNITS SHALL CONTAIN CALCIUM NITRITE CORROSION INHIBITOR IN ACCORDANCE WITH THE STANDARD SPECIFICATIONS.

FOR GROUT FOR STRUCTURES, SEE SPECIAL PROVISIONS.

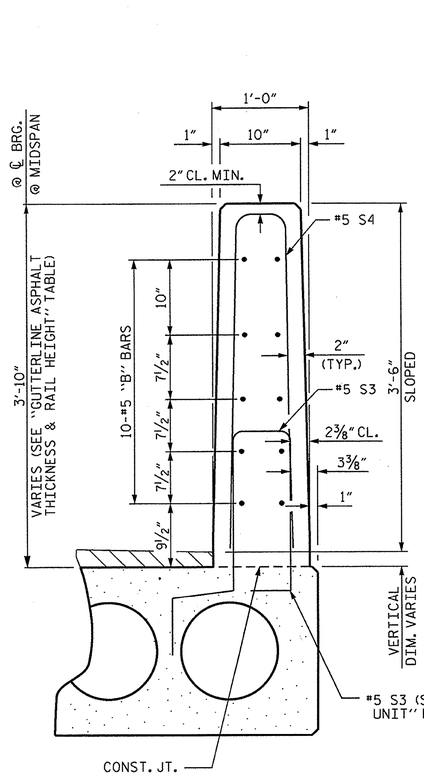

VERTICAL CONCRETE BARRIER RAIL SECTION

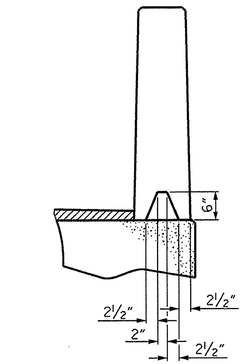

SECTION S-S
AT DAM IN OPEN JOINT
(THIS IS TO BE USED ONLY WHEN SLIP FORM IS USED)

℄ ½" EXP. JT. MAT'L HELD IN PLACE WITH GALVANIZED NAILS. (NOTE: OMIT EXP. JT. MAT'L. WHEN SLIP FORM IS USED)

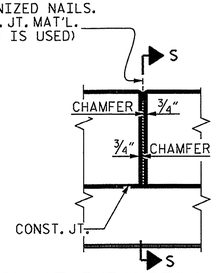

ELEVATION AT EXPANSION JOINTS

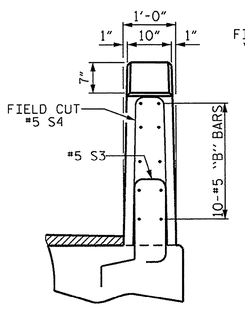

END VIEW

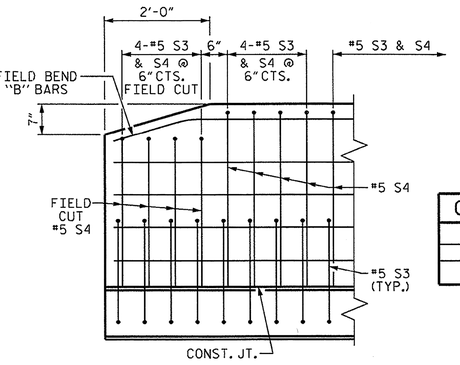

SIDE VIEW

END OF RAIL DETAILS

GRADE 270 STRANDS

	0.6"Ø L.R.
AREA (SQUARE INCHES)	0.217
ULTIMATE STRENGTH (LBS. PER STRAND)	58,600
APPLIED PRESTRESS (LBS. PER STRAND)	43,950

CONCRETE RELEASE STRENGTH

UNIT	PSI
50' UNITS	4900

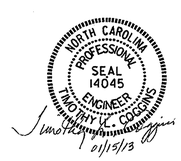

PROJECT NO. 17BP.1.R.9
DARE COUNTY
STATION: 13+05.93 -L-

SHEET 3 OF 3

STATE OF NORTH CAROLINA
DEPARTMENT OF TRANSPORTATION
RALEIGH

STANDARD
3'-0" X 1'-9"
PRESTRESSED CONCRETE
CORED SLAB UNIT
90° SKEW

REVISIONS						SHEET NO.
NO.	BY:	DATE:	NO.	BY:	DATE:	14
1			3			TOTAL SHEETS
2			4			28

ASSEMBLED BY : B. L. GREEN	DATE : 11/7/12		
CHECKED BY : N. RUFFIN	DATE : 12/17/12		
DRAWN BY : DGE 5/09	REV. 12/11	MAA/AAC	
CHECKED BY : BCH 6/09			

15-JAN-2013 12:11
S:\DPG\Tim\Division 1 LIBR\17BP.1.R.9\bgreen\17BP.1.R.9_SD_CS.dgn
tcoggins

STD. NO. 21"PCS3_30_90S

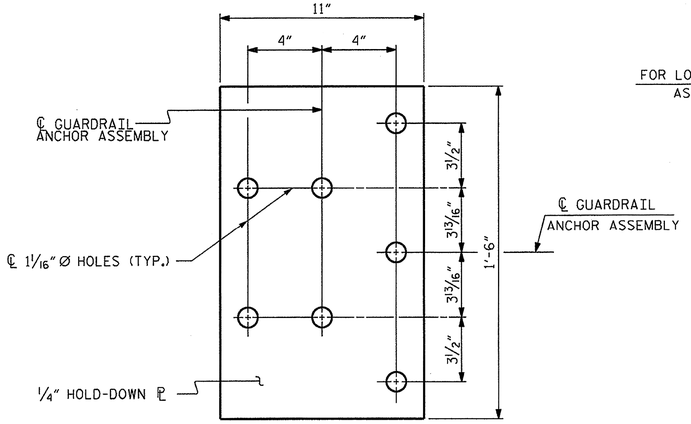

PLAN

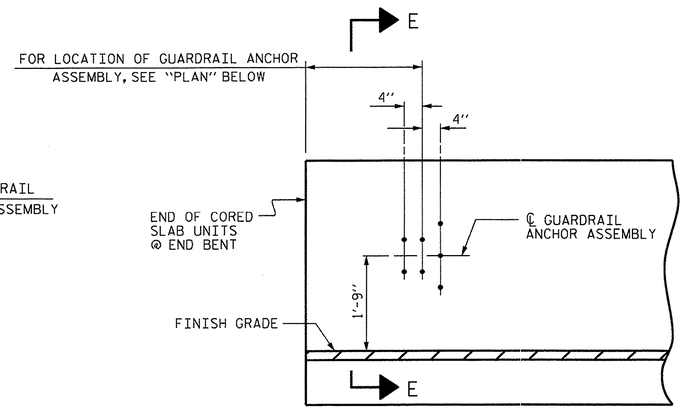

ELEVATION

NOTES

THE GUARDRAIL ANCHOR ASSEMBLY SHALL CONSIST OF A 1/4" HOLD DOWN PLATE AND 7 - 7/8" Ø BOLTS WITH NUTS AND WASHERS.

THE HOLD-DOWN PLATE SHALL CONFORM TO AASHTO M270 GRADE 36. AFTER FABRICATION, THE HOLD-DOWN PLATE SHALL BE HOT-DIP GALVANIZED IN ACCORDANCE WITH AASHTO M111.

BOLTS SHALL CONFORM TO THE REQUIREMENTS OF ASTM A307 AND NUTS SHALL CONFORM TO THE REQUIREMENTS OF AASHTO M291. BOLTS, NUTS AND WASHERS SHALL BE GALVANIZED. (AT THE CONTRACTOR'S OPTION, STAINLESS STEEL BOLTS, NUTS AND WASHERS MAY BE USED AS AN ALTERNATE FOR THE 7/8" Ø GALVANIZED BOLTS, NUTS AND WASHERS. THEY SHALL CONFORM TO OR EXCEED THE MECHANICAL REQUIREMENTS OF ASTM A307. THE USE OF THIS ALTERNATE SHALL BE APPROVED BY THE ENGINEER.)

THE GUARDRAIL ANCHOR ASSEMBLY IS REQUIRED AT ALL POINTS WHERE APPROACH GUARDRAIL IS TO BE ATTACHED TO THE END OF BARRIER RAIL. FOR POINTS OF ATTACHMENT, SEE SKETCH.

AFTER INSTALLATION, THE EXPOSED THREAD OF THE BOLT SHALL BE BURRED WITH A SHARP POINTED TOOL.

THE COST OF THE GUARDRAIL ANCHOR ASSEMBLY SHALL BE INCLUDED IN THE UNIT CONTRACT PRICE BID FOR VERTICAL CONCRETE BARRIER RAIL.

THE VERTICAL REINFORCING BARS MAY BE SHIFTED SLIGHTLY IN THE VERTICAL CONCRETE BARRIER RAIL TO CLEAR ASSEMBLY BOLTS.

THE 1 1/4" Ø HOLES SHALL BE FORMED OR DRILLED WITH A CORE BIT. IMPACT TOOLS WILL NOT BE PERMITTED. ANY CONCRETE DAMAGED BY THIS WORK SHALL BE REPAIRED TO THE SATISFACTION OF THE ENGINEER.

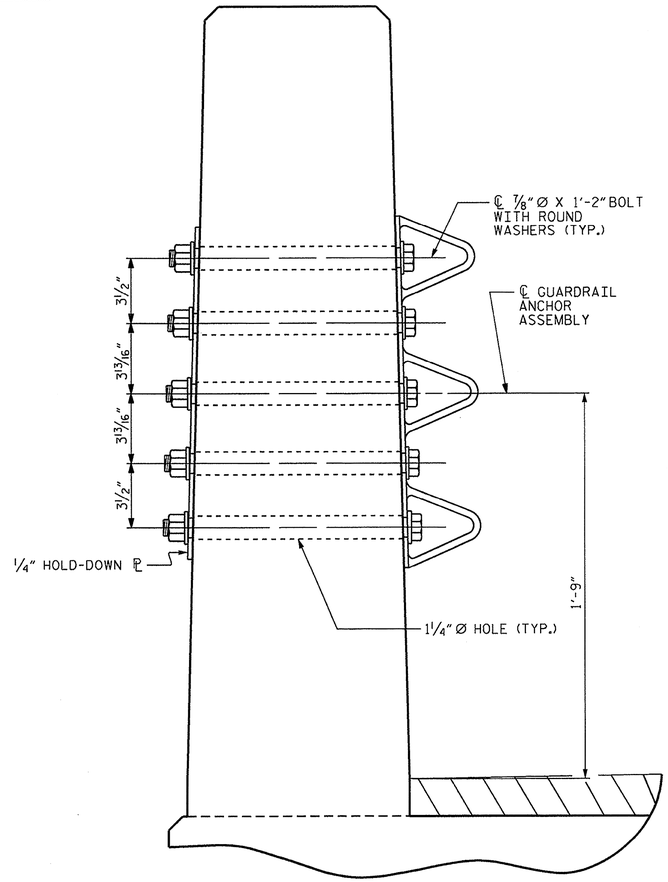

SECTION E-E

GUARDRAIL ANCHOR ASSEMBLY DETAILS

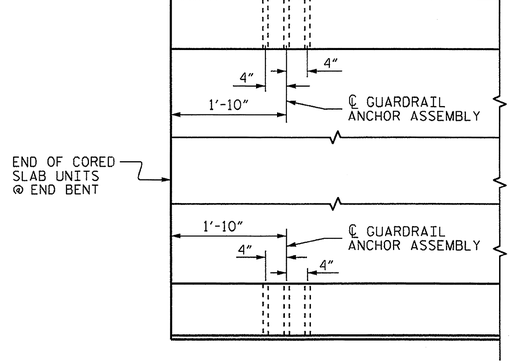

PLAN

LOCATION OF ANCHORS FOR GUARDRAIL

END BENT #1 SHOWN, END BENT #2 SIMILAR.

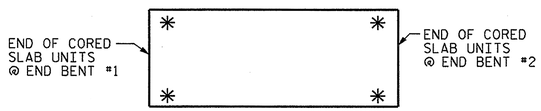

SKETCH SHOWING POINTS OF ATTACHMENT

✳ DENOTES GUARDRAIL ANCHOR ASSEMBLY

PROJECT NO. 17BP.1.R.9

DARE COUNTY

STATION: 13+05.93 -L-

STATE OF NORTH CAROLINA
DEPARTMENT OF TRANSPORTATION
RALEIGH

STANDARD
GUARDRAIL ANCHORAGE FOR VERTICAL CONCRETE BARRIER RAIL

REVISIONS						SHEET NO.
NO.	BY:	DATE:	NO.	BY:	DATE:	15
1			3			TOTAL SHEETS
2			4			28

NORTH CAROLINA PROFESSIONAL SEAL 14045 ENGINEER TIMOTHY W. COGGINS
01/15/13

ASSEMBLED BY : B. L. GREEN	DATE : 11/7/12	ADDED 5/6/10	
CHECKED BY : N. RUFFIN	DATE : 12/17/12	REV. 10/1/11	MAA/GM
DRAWN BY : MAA 5/10		REV. 12/5/11	MAA/GM
CHECKED BY : GM 5/10			

15-JAN-2013 12:10
S:\DPG\TIm\Division 1 LIBR\17BP.1.R.9\bgreen\17BP.1.R.9_SD_CS.dgn
tcoggins

(SHT 1) STD. NO. GRA3

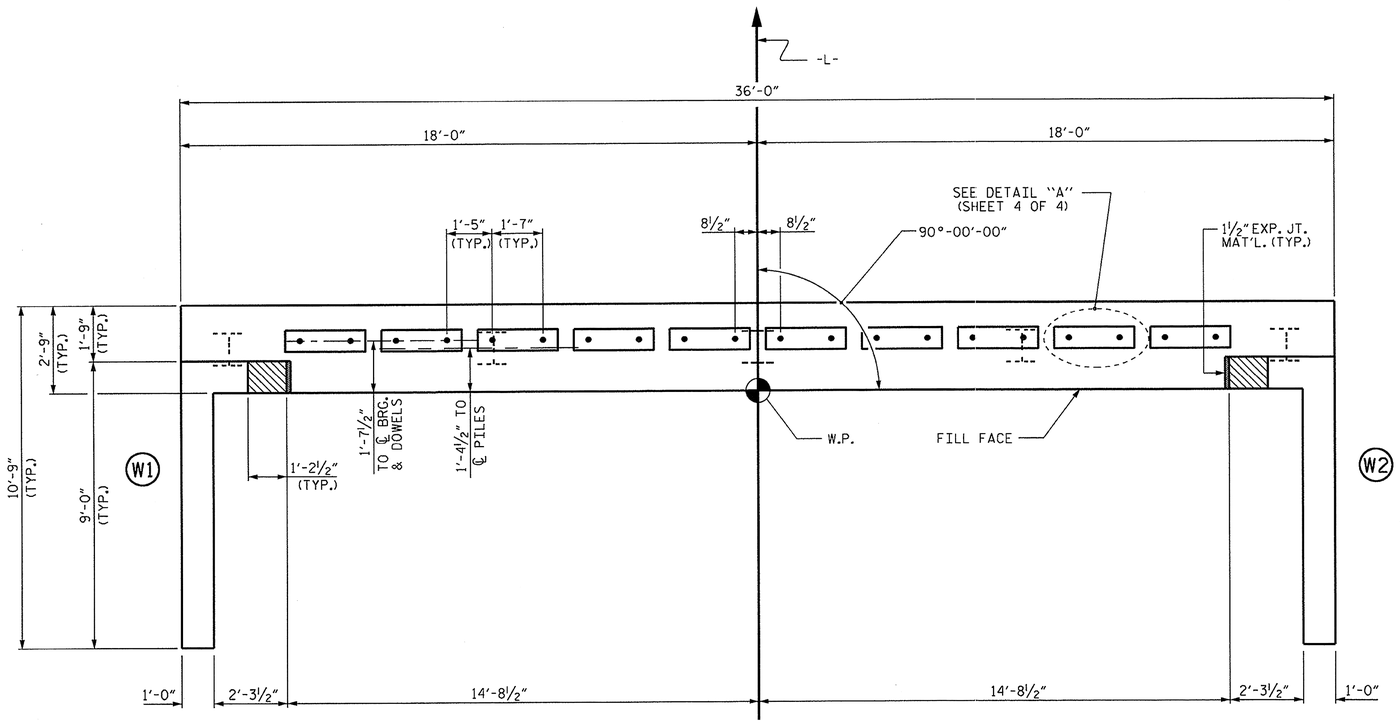

PLAN

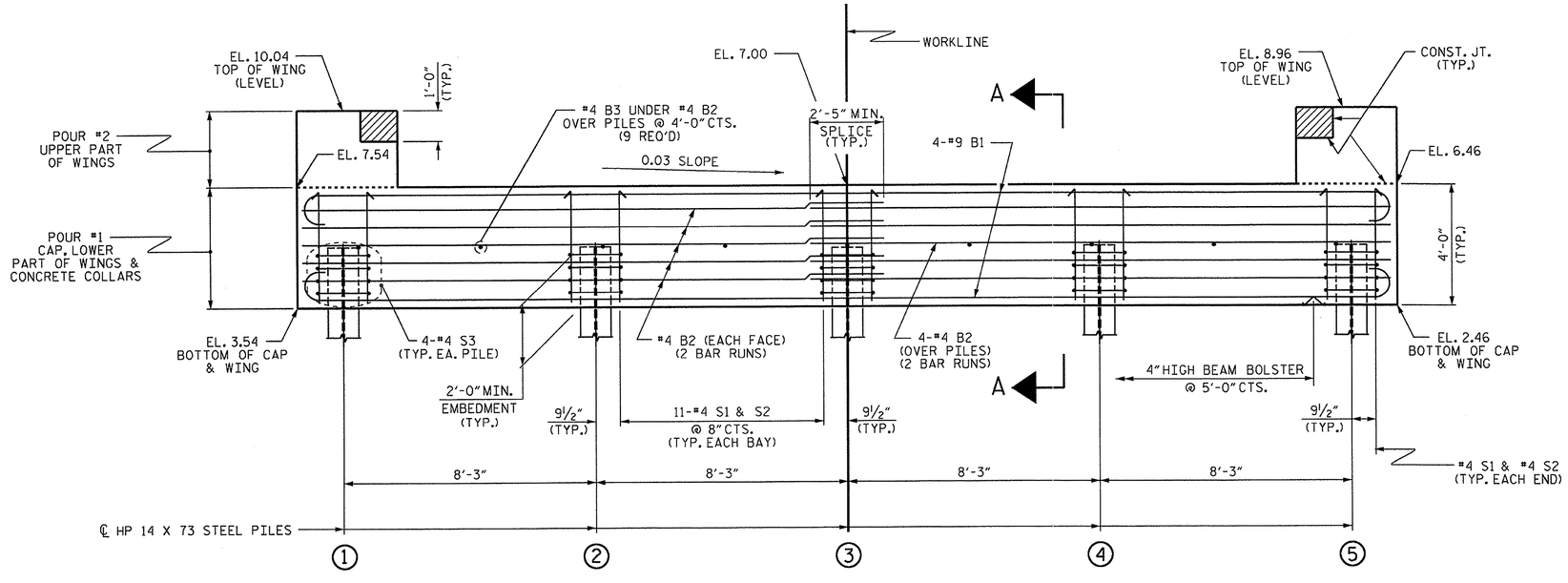

ELEVATION

WINGS NOT SHOWN FOR CLARITY.
FOR SECTION A-A, SEE SHEET 4 OF 4.
CONCRETE COLLARS FOR STEEL PILES NOT SHOWN IN PLAN AND ELEVATION VIEWS FOR CLARITY.
SEE "CORROSION PROTECTION FOR STEEL PILES DETAIL", SHEET 4 OF 4.

NOTES

STIRRUPS IN CAP MAY BE SHIFTED AS NECESSARY TO CLEAR DOWELS.

THE CONCRETE IN THE SHADED AREA OF THE WING SHALL BE POURED AFTER THE VERTICAL CONCRETE BARRIER RAIL IS CAST IF SLIP FORMING IS USED.

THE CONCRETE IN THE END BENT CAP OF END BENT NO. 1 SHALL CONTAIN SILICA FUME. SILICA FUME SHALL BE SUBSTITUTED FOR 5% OF THE PORTLAND CEMENT BY WEIGHT. IF THE OPTION OF ARTICLE 1024-1 OF THE STANDARD SPECIFICATIONS TO PARTIALLY SUBSTITUTE CLASS F FLY ASH FOR PORTLAND CEMENT IS EXERCISED, THEN THE RATE OF FLY ASH SUBSTITUTION SHALL BE REDUCED TO 1.0 LB OF FLY ASH PER 1.0 LB. NO PAYMENT WILL BE MADE FOR THIS SUBSTITUTION AS IT IS CONSIDERED INCIDENTAL TO THE VARIOUS PAY ITEMS.

INSTALL THE 4"DIA. DRAIN PIPE THROUGH THE WING WALL AS REQUIRED FOR REINFORCED BRIDGE APPROACH FILLS. SEE THE ROADWAY PLANS. REINFORCING STEEL IN THE WING WALL MAY BE SHIFTED AS NECESSARY TO CLEAR THE DRAIN PIPE.

FOR PILE SPLICE DETAILS, SEE SHEET 4 OF 4.

FOR WING DETAILS, SEE SHEET 3 OF 4.

TOP OF PILE ELEVATIONS	
①	5.51
②	5.27
③	5.02
④	4.77
⑤	4.52

PROJECT NO. 17BP.1.R.9
DARE COUNTY
STATION: 13+05.93 -L-

SHEET 1 OF 4

STATE OF NORTH CAROLINA
DEPARTMENT OF TRANSPORTATION
RALEIGH

SUBSTRUCTURE

END BENT No. 1

REVISIONS						SHEET NO.
NO.	BY:	DATE:	NO.	BY:	DATE:	16
1			3			TOTAL SHEETS
2			4			28

NORTH CAROLINA PROFESSIONAL SEAL 14045 ENGINEER TIMOTHY L. COGGINS
01/15/13

ASSEMBLED BY :	B. L. GREEN	DATE : 11/7/12
CHECKED BY :	N. RUFFIN	DATE : 12/17/12
DRAWN BY :	WJH	12/11
CHECKED BY :	AAC	12/11

15-JAN-2013 12:10
S:\DPG1\Tim\Division 1 LIBR\17BP.1.R.9\bgreen\17BP.1.R.9_SD_CS.dgn
tcoggins

STD. NO. EB_30_90S4

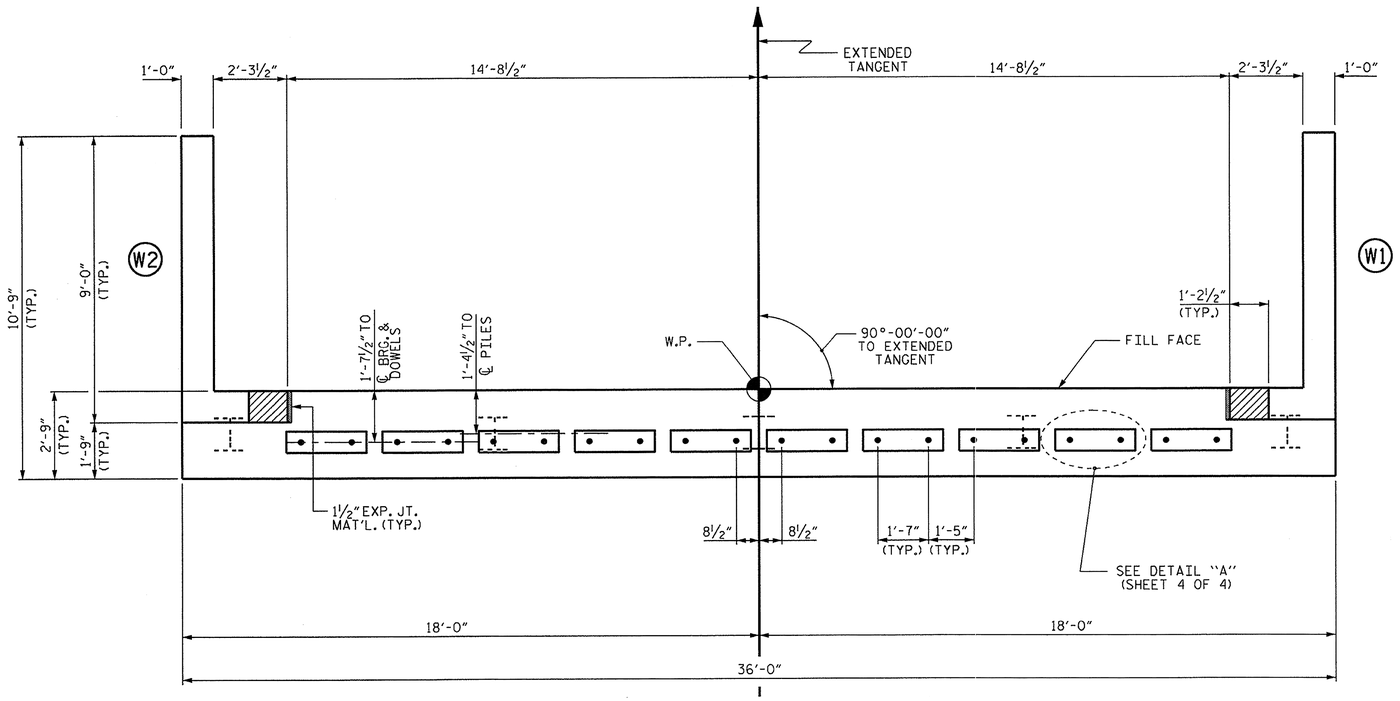

PLAN

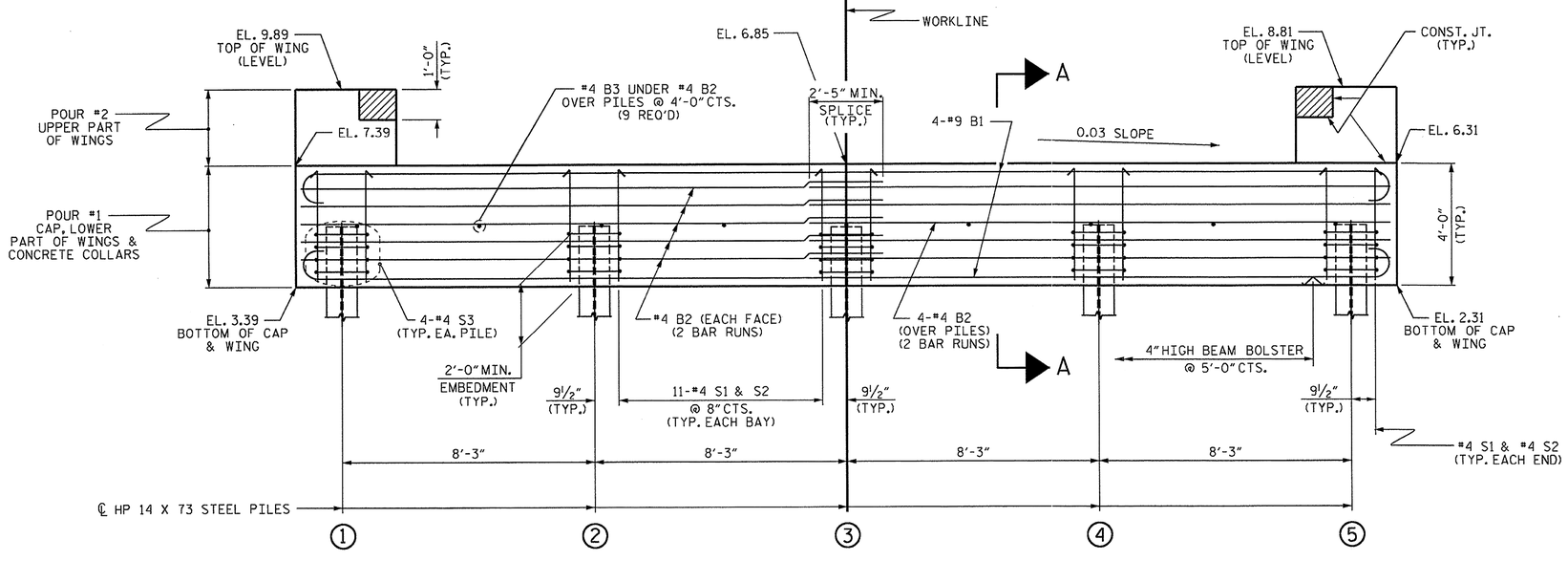

ELEVATION

WINGS NOT SHOWN FOR CLARITY.
FOR SECTION A-A, SEE SHEET 4 OF 4.
CONCRETE COLLARS FOR STEEL PILES NOT SHOWN IN PLAN AND ELEVATION VIEWS FOR CLARITY.
SEE "CORROSION PROTECTION FOR STEEL PILES DETAIL", SHEET 4 OF 4.

NOTES

STIRRUPS IN CAP MAY BE SHIFTED AS NECESSARY TO CLEAR DOWELS.

THE CONCRETE IN THE SHADED AREA OF THE WING SHALL BE POURED AFTER THE VERTICAL CONCRETE BARRIER RAIL IS CAST IF SLIP FORMING IS USED.

THE CONCRETE IN THE END BENT CAP OF END BENT NO. 2 SHALL CONTAIN SILICA FUME. SILICA FUME SHALL BE SUBSTITUTED FOR 5% OF THE PORTLAND CEMENT BY WEIGHT. IF THE OPTION OF ARTICLE 1024-1 OF THE STANDARD SPECIFICATIONS TO PARTIALLY SUBSTITUTE CLASS F FLY ASH FOR PORTLAND CEMENT IS EXERCISED, THEN THE RATE OF FLY ASH SUBSTITUTION SHALL BE REDUCED TO 1.0 LB OF FLY ASH PER 1.0 LB. NO PAYMENT WILL BE MADE FOR THIS SUBSTITUTION AS IT IS CONSIDERED INCIDENTAL TO THE VARIOUS PAY ITEMS.

INSTALL THE 4" DIA. DRAIN PIPE THROUGH THE WING WALL AS REQUIRED FOR REINFORCED BRIDGE APPROACH FILLS, SEE THE ROADWAY PLANS. REINFORCING STEEL IN THE WING WALL MAY BE SHIFTED AS NECESSARY TO CLEAR THE DRAIN PIPE.

FOR PILE SPLICE DETAILS, SEE SHEET 4 OF 4.

FOR WING DETAILS, SEE SHEET 3 OF 4.

TOP OF PILE ELEVATIONS	
①	5.36
②	5.12
③	4.87
④	4.62
⑤	4.37

PROJECT NO. 17BP.1.R.9
DARE COUNTY
STATION: 13+05.93 -L-

SHEET 2 OF 4

STATE OF NORTH CAROLINA
DEPARTMENT OF TRANSPORTATION
RALEIGH

SUBSTRUCTURE

END BENT No. 2

REVISIONS						SHEET NO.
NO.	BY:	DATE:	NO.	BY:	DATE:	17
1			3			TOTAL SHEETS
2			4			28

NORTH CAROLINA PROFESSIONAL SEAL 14045 ENGINEER TIMOTHY G COGGINS
01/15/13

ASSEMBLED BY :	B. L. GREEN	DATE : 11/7/12
CHECKED BY :	N. RUFFIN	DATE : 12/17/12
DRAWN BY :	WJH 12/11	
CHECKED BY :	AAC 12/11	

15-JAN-2013 12:10
S:\DPG1\Tim\Division 1 LIBR\17BP.1.R.9\bgreen\17BP.1.R.9_SD_CS.dgn
tcoggins

STD. NO. EB_30_90S4

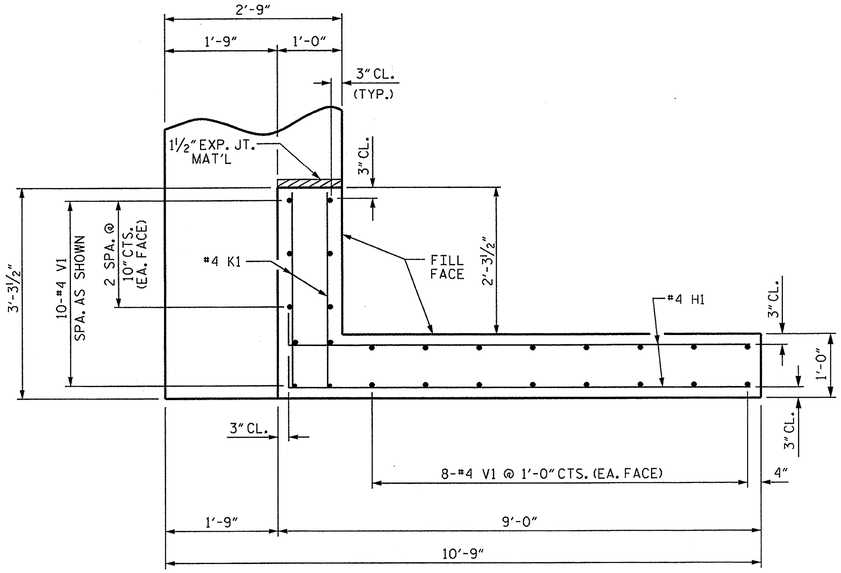

PLAN OF WING (W1)

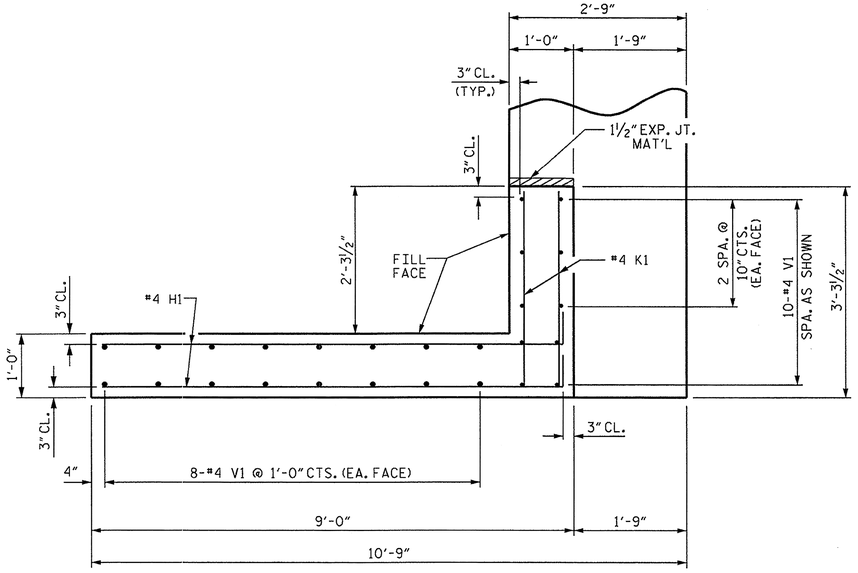

PLAN OF WING (W2)

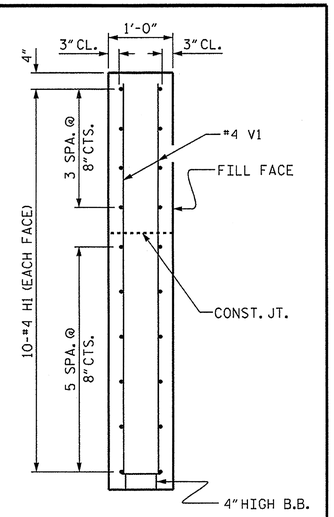

SECTION X-X

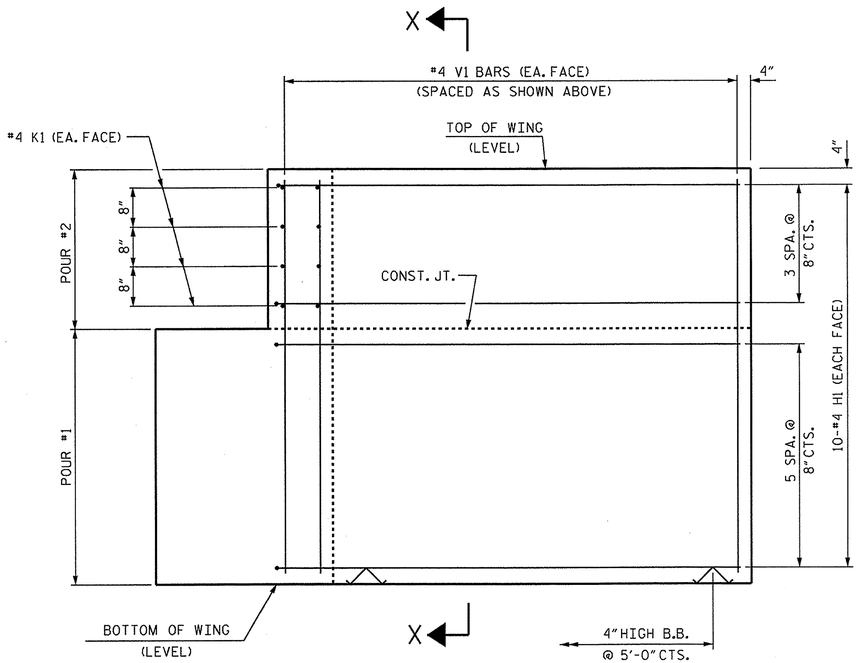

ELEVATION OF WING (W1)

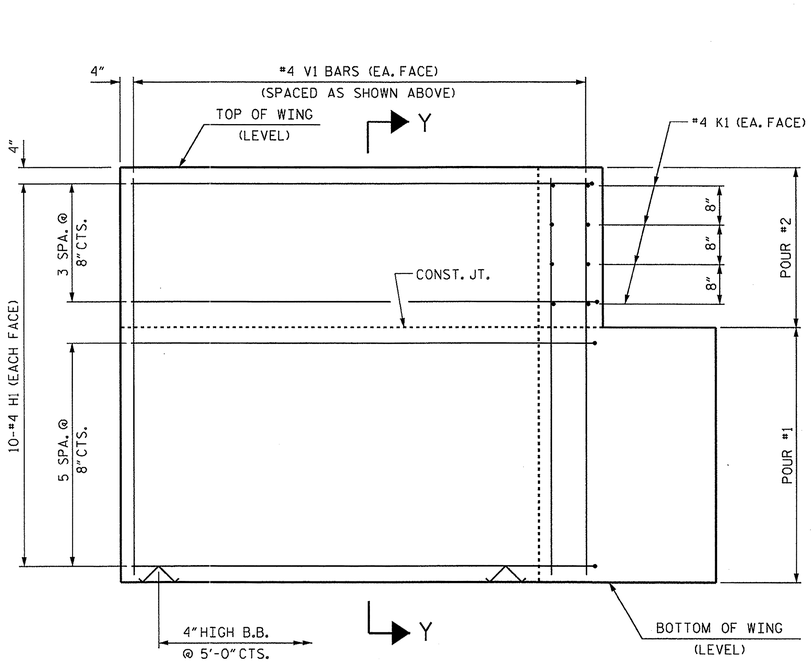

ELEVATION OF WING (W2)

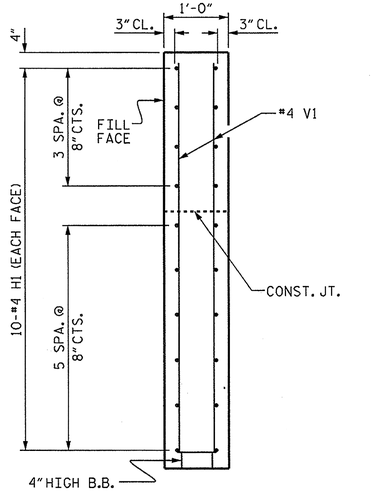

SECTION Y-Y

WING DETAILS

PROJECT NO. 17BP.1.R.9

DARE COUNTY

STATION: 13+05.93 -L-

SHEET 3 OF 4

STATE OF NORTH CAROLINA
DEPARTMENT OF TRANSPORTATION
RALEIGH

SUBSTRUCTURE

END BENT
WING DETAILS

REVISIONS						SHEET NO.
NO.	BY:	DATE:	NO.	BY:	DATE:	18
1			3			TOTAL SHEETS
2			4			28

NORTH CAROLINA PROFESSIONAL SEAL 14045 ENGINEER TIMOTHY A. COGGINS
01/15/13

ASSEMBLED BY : B. L. GREEN	DATE : 11/7/12	
CHECKED BY : N. RUFFIN	DATE : 12/17/12	
DRAWN BY : WJH	12/11	
CHECKED BY : AAC	12/11	

15-JAN-2013 12:09
S:\DPG1\Tim\Division 1 LIBR\17BP.1.R.9\bgreen\17BP.1.R.9_SD_CS.dgn
tcoggins

STD. NO. EB_30_90S4

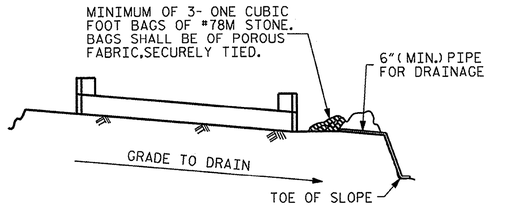

BAGGED STONE AND PIPE SHALL BE PLACED IMMEDIATELY AFTER COMPLETION OF END BENT EXCAVATION. PIPE MAY BE EITHER CONCRETE, CORRUGATED STEEL, CORRUGATED ALUMINUM ALLOY, OR CORRUGATED PLASTIC. PERFORATED PIPE WILL NOT BE ALLOWED.

BAGGED STONE SHALL REMAIN IN PLACE UNTIL THE ENGINEER DIRECTS THAT IT BE REMOVED. THE CONTRACTOR SHALL REMOVE AND DISPOSE OF SILT ACCUMULATIONS AT BAGGED STONE WHEN SO DIRECTED BY THE ENGINEER. BAGS SHALL BE REMOVED AND REPLACED WHENEVER THE ENGINEER DETERMINES THAT THEY HAVE DETERIORATED AND LOST THEIR EFFECTIVENESS.

NO SEPARATE PAYMENT WILL BE MADE FOR THIS WORK AND THE ENTIRE COST OF THIS WORK SHALL BE INCLUDED IN THE UNIT CONTRACT PRICE BID FOR THE SEVERAL PAY ITEMS.

TEMPORARY DRAINAGE AT END BENT

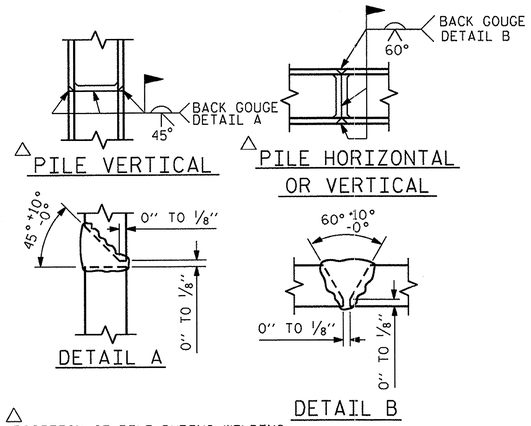

△POSITION OF PILE DURING WELDING.

PILE SPLICE DETAILS

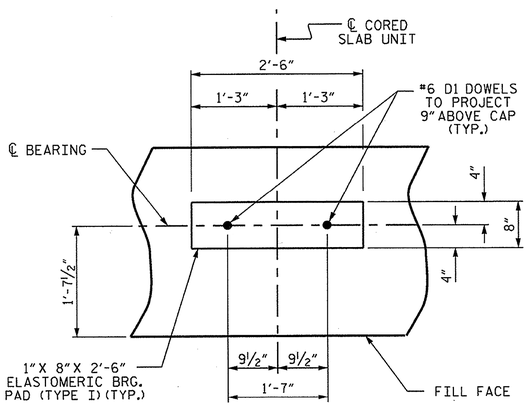

DETAIL "A"

(END BENT No. 1 SHOWN, END BENT No. 2 SIMILAR BY ROTATION)

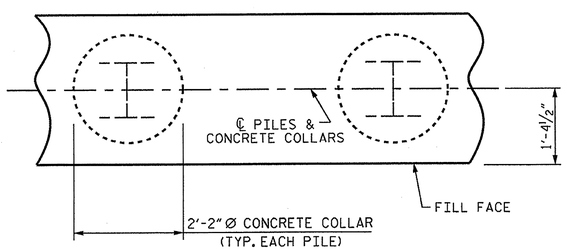

PLAN

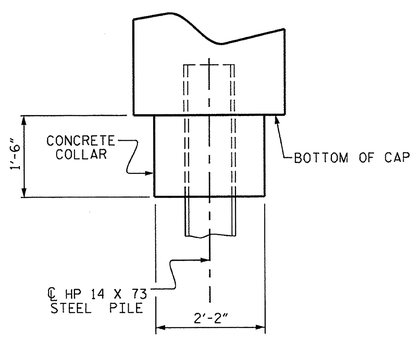

ELEVATION

CORROSION PROTECTION FOR STEEL PILES DETAIL

(END BENT No. 1 SHOWN, END BENT No. 2 SIMILAR BY ROTATION)

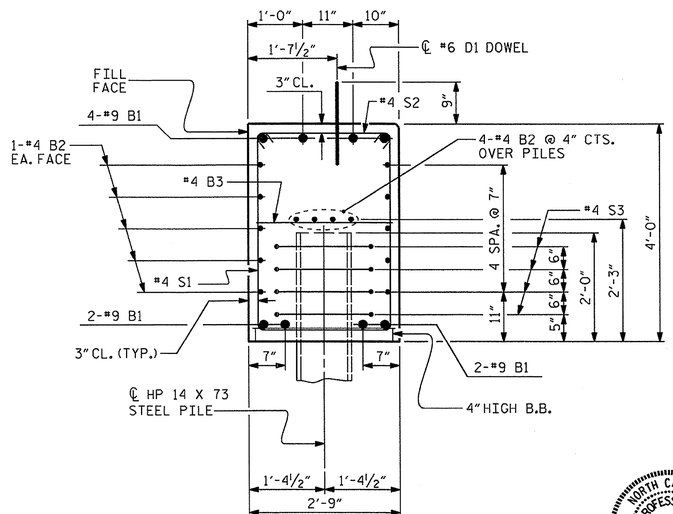

SECTION A-A

(CONCRETE COLLAR NOT SHOWN FOR CLARITY. SEE "CORROSION PROTECTION FOR STEEL PILES DETAIL.")

BAR TYPES

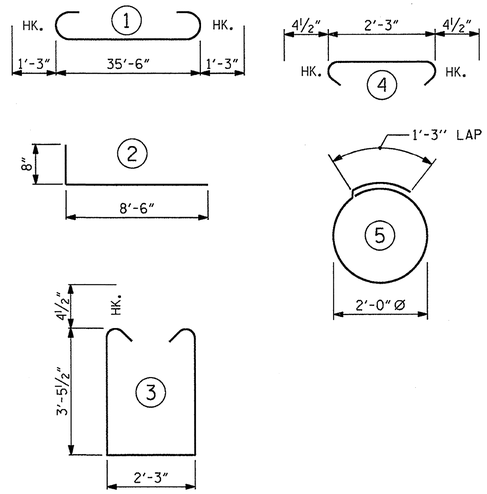

ALL BAR DIMENSIONS ARE OUT TO OUT.

END BENT No. 1	END BENT No. 2
HP 14 X 73 STEEL PILES	HP 14 X 73 STEEL PILES
NO: 5 LIN. FT.= 325	NO: 5 LIN. FT.= 350
PILE REDRIVES EA. 3	PILE REDRIVES EA. 3

BILL OF MATERIAL

FOR ONE END BENT

BAR	NO.	SIZE	TYPE	LENGTH	WEIGHT
* B1	8	#9	1	38'-0"	1034
* B2	28	#4	STR	19'-1"	357
* B3	9	#4	STR	2'-3"	14
* D1	20	#6	STR	1'-6"	45
* H1	40	#4	2	9'-2"	245
* K1	16	#4	STR	2'-9"	29
* S1	46	#4	3	9'-11"	305
* S2	46	#4	4	3'-0"	92
* S3	20	#4	5	7'-7"	101
* V1	52	#4	STR	6'-0"	208

*EPOXY COATED REINFORCING STEEL (FOR ONE END BENT) 2430 LBS.

CLASS AA CONCRETE BREAKDOWN (FOR ONE END BENT)

POUR #1 CAP, LOWER PART OF WINGS & COLLARS 18.1 C.Y.

POUR #2 UPPER PART OF WINGS 2.1 C.Y.

TOTAL CLASS AA CONCRETE 20.2 C.Y.

ASSEMBLED BY : B. L. GREEN	DATE : 11/7/12		
CHECKED BY : N. RUFFIN	DATE : 12/17/12		
DRAWN BY : WJH 12/11			
CHECKED BY : AAC 12/11			

15-JAN-2013 12:09
S:\DPGI\Tim\Division 1 LIBR\17BP.1.R.9\bgreen\17BP.1.R.9_SD_CS.dgn
tcoggins

PROJECT NO. 17BP.1.R.9

DARE COUNTY

STATION: 13+05.93 -L-

SHEET 4 OF 4

STATE OF NORTH CAROLINA
DEPARTMENT OF TRANSPORTATION
RALEIGH

SUBSTRUCTURE

END BENT No. 1 & 2 DETAILS

REVISIONS						SHEET NO.
NO.	BY:	DATE:	NO.	BY:	DATE:	19
1			3			TOTAL SHEETS
2			4			28

STD. NO. EB_30_90S4

NOTES :

FOR BERM WIDTH DIMENSIONS, SEE GENERAL DRAWING.

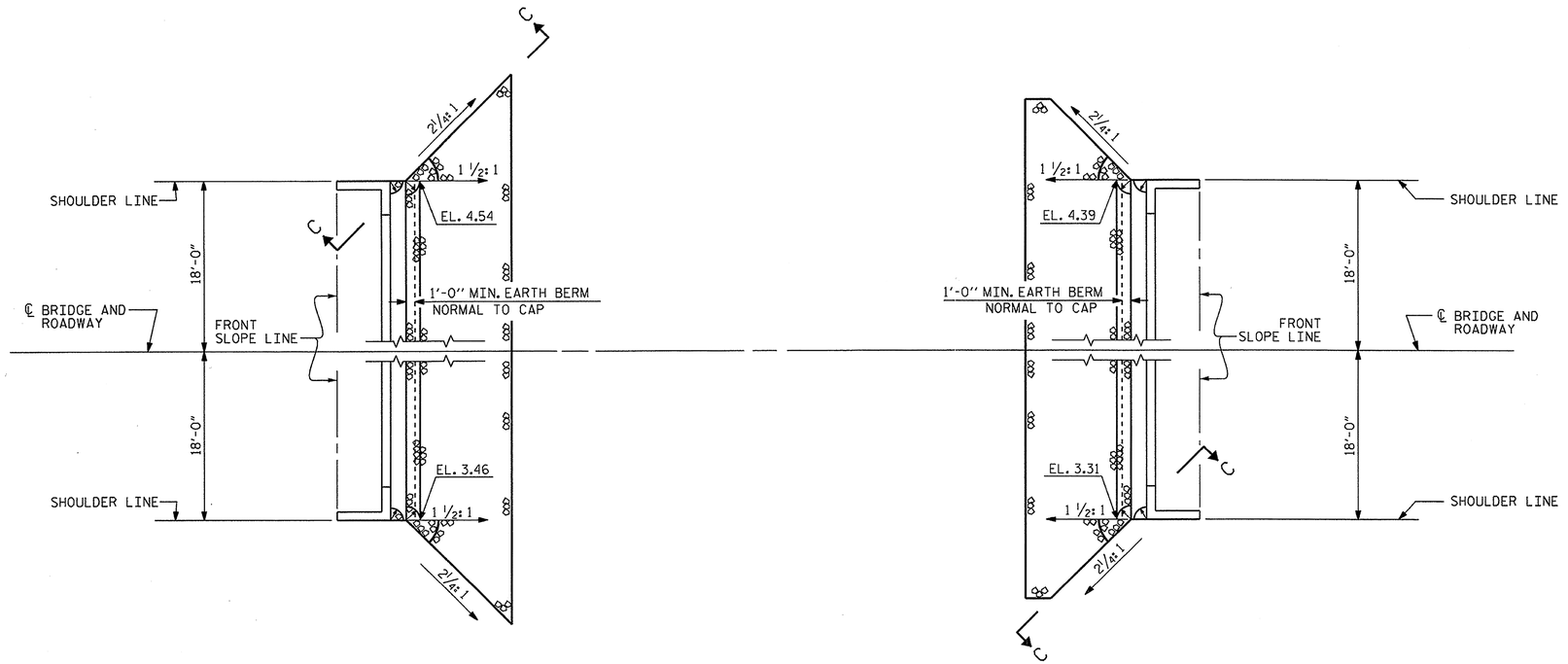

PLAN

ESTIMATED QUANTITIES		
BRIDGE @ STA. 13+05.93 -L-	RIP RAP CLASS II (2'-0" THICK)	GEOTEXTILE FOR DRAINAGE
	TONS	SQUARE YARDS
END BENT 1	60	65
END BENT 2	60	65

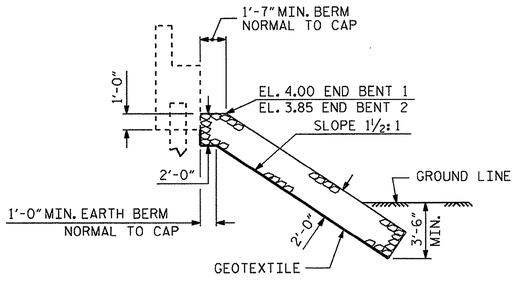

℄ SECTION

BERM RIP RAPPED

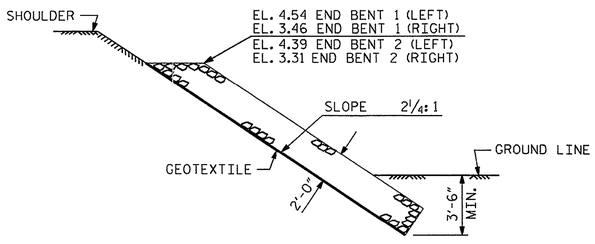

SECTION C-C

PROJECT NO. 17BP.1.R.9

DARE COUNTY

STATION: 13+05.93 -L-

STATE OF NORTH CAROLINA
DEPARTMENT OF TRANSPORTATION
RALEIGH

STANDARD

RIP RAP DETAILS

NORTH CAROLINA PROFESSIONAL SEAL 14045 ENGINEER TIMOTHY W. COGGINS
01/15/13

REVISIONS						SHEET NO.
NO.	BY:	DATE:	NO.	BY:	DATE:	20
1			3			TOTAL SHEETS
2			4			28

ASSEMBLED BY :	B. L. GREEN	DATE :	11/7/12
CHECKED BY :	N. RUFFIN	DATE :	12/17/12
DRAWN BY : REK 1/84	REV. 5/1/06R		TLA/GM
CHECKED BY : RDU 1/84	REV. 10/1/11		MAA/GM
	REV. 12/21/11		MAA/GM

15-JAN-2013 12:09
S:\DPG1\Tim\Division 1 LIBR\17BP.1.R.9\bgreen\17BP.1.R.9_SD_CS.dgn
tcoggins

STD. NO. RR1 (Sht 2)

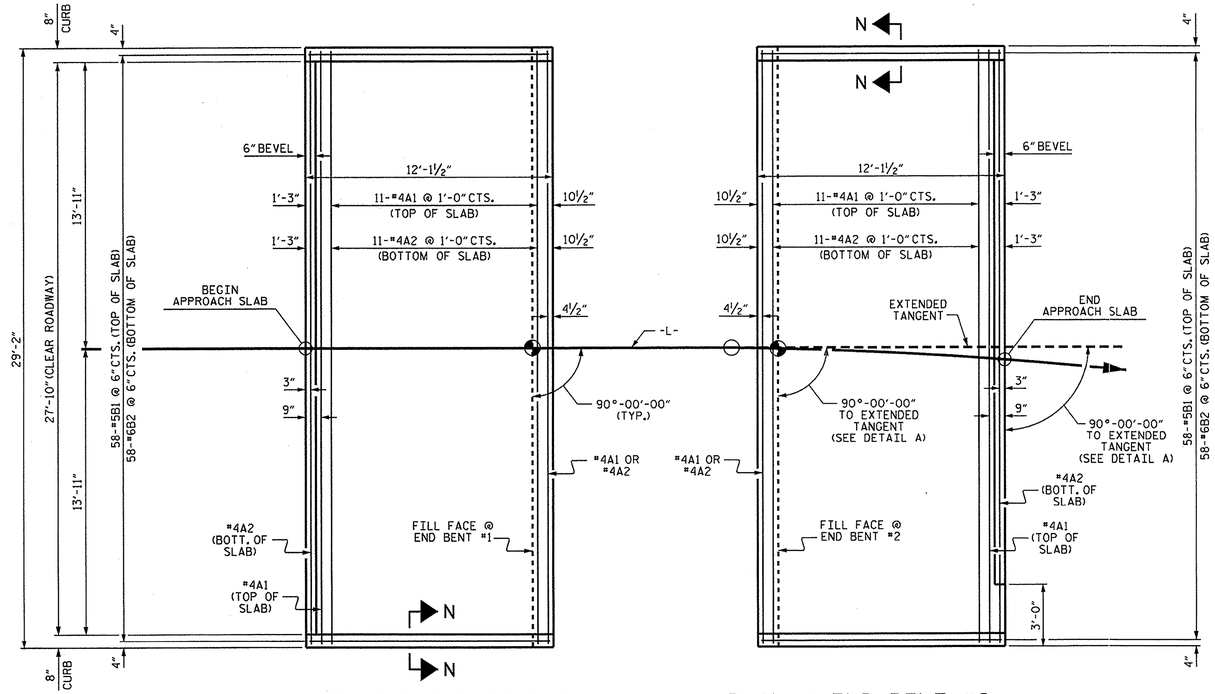

PLAN @ END BENT #1 PLAN @ END BENT #2

DIMENSIONS SHOWN ARE TYPICAL FOR BOTH APPROACH SLABS

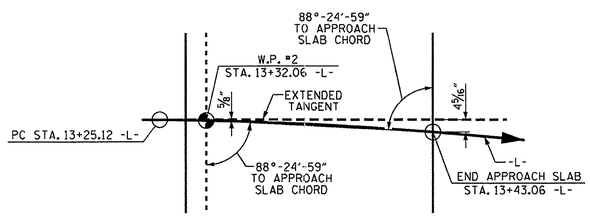

DETAIL A

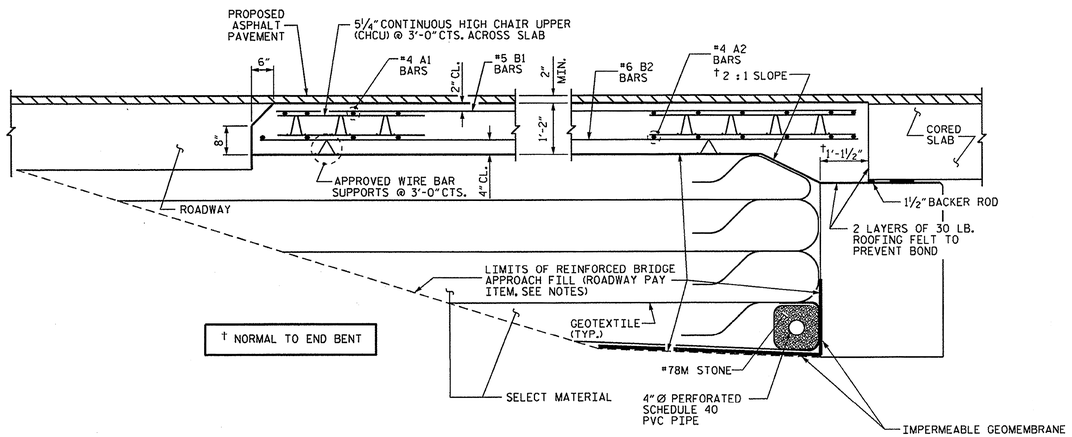

SECTION THRU SLAB

NOTES

FOR REINFORCED BRIDGE APPROACH FILL INCLUDING GEOTEXTILE, IMPERMEABLE GEOMEMBRANE, 4" Ø DRAINAGE PIPE, #78M STONE, AND SELECT MATERIAL, SEE ROADWAY PLANS.

AREA BETWEEN THE WINGWALL AND APPROACH SLAB SHALL BE GRADED TO DRAIN THE WATER AWAY FROM THE FILL FACE OF THE BRIDGE AND SHALL BE PAVED. SEE ROADWAY PLANS.

APPROACH SLAB GROOVING IS NOT REQUIRED.

BILL OF MATERIAL

APPROACH SLAB AT EB #1

BAR	NO.	SIZE	TYPE	LENGTH	WEIGHT
* A1	13	#4	STR	28'-10"	250
A2	13	#4	STR	28'-10"	250
* B1	58	#5	STR	11'-2"	676
B2	58	#6	STR	11'-8"	1016
REINFORCING STEEL				LBS.	1266
* EPOXY COATED REINFORCING STEEL				LBS.	926
CLASS AA CONCRETE				C. Y.	16.9

APPROACH SLAB AT EB #2

BAR	NO.	SIZE	TYPE	LENGTH	WEIGHT
* A1	13	#4	STR	28'-10"	250
A2	13	#4	STR	28'-10"	250
* B1	58	#5	STR	11'-2"	676
B2	58	#6	STR	11'-8"	1016
REINFORCING STEEL				LBS.	1266
* EPOXY COATED REINFORCING STEEL				LBS.	926
CLASS AA CONCRETE				C. Y.	16.9

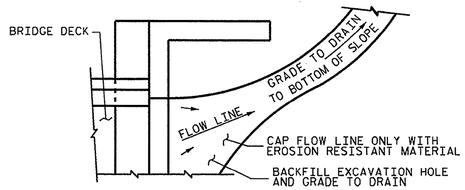

NOTE: IF THE APPROACH SLAB IS NOT CONSTRUCTED IMMEDIATELY AFTER THE BACKFILLING OF THE END BENT EXCAVATION, GRADE TO DRAIN TO THE BOTTOM OF THE SLOPE AND PROVIDE EROSION RESISTANT MATERIAL, SUCH AS FIBERGLASS ROVING OR AS DIRECTED BY THE ENGINEER TO PREVENT SOIL EROSION AND TO PROTECT THE AREA ADJACENT TO THE STRUCTURE. THE CONTRACTOR WILL BE REQUIRED TO REMOVE THESE MATERIALS PRIOR TO CONSTRUCTION OF THE APPROACH SLAB.

TEMPORARY DRAINAGE DETAIL

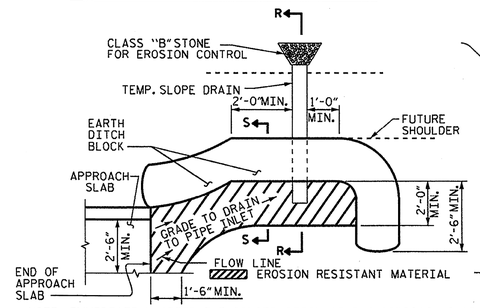

NOTE: IMMEDIATELY AFTER THE CONSTRUCTION OF THE APPROACH SLAB, THE CONTRACTOR SHALL PROVIDE TEMPORARY BERM AND SLOPE DRAIN. CONTRACTOR SHALL GRADE TO PIPE INLET AND PROVIDE EROSION RESISTANT MATERIAL AS SHOWN. THE EROSION RESISTANT MATERIAL SHALL BE EITHER 1) ASPHALT PLANT MIX, TYPE 1 OR TYPE 2, MIN. 2" DEPTH, 2) EROSION CONTROL MAT, OR 3) CONCRETE, AS DIRECTED BY THE ENGINEER. THE SLOPE DRAIN SHALL CONSIST OF A NON-PERFORATED TEMPORARY DRAINAGE PIPE, 12 INCHES IN DIAMETER.

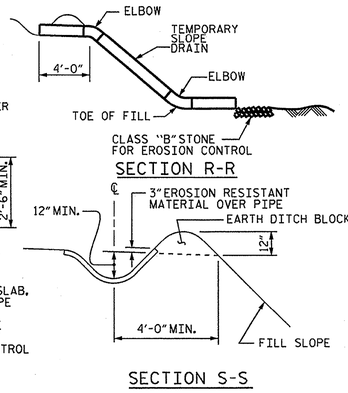

SECTION S-S

PLAN VIEW

TEMPORARY BERM AND SLOPE DRAIN DETAILS

(TO BE USED WHEN SHOULDER BERM GUTTER IS REQUIRED)

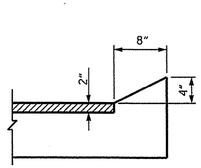

SECTION N-N

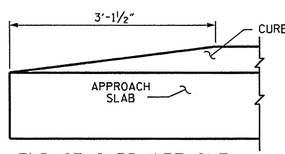

END OF CURB WITHOUT SHOULDER BERM GUTTER

CURB DETAILS

SPLICE LENGTHS		
BAR SIZE	EPOXY COATED	UNCOATED
#4	2'-0"	1'-9"
#5	2'-6"	2'-2"
#6	3'-10"	2'-7"

NORTH CAROLINA PROFESSIONAL SEAL 14045 ENGINEER TIMOTHY R. COGGINS

PROJECT NO. 17BP.1.R.9

DARE COUNTY

STATION: 13+05.93 -L-

STATE OF NORTH CAROLINA
DEPARTMENT OF TRANSPORTATION
RALEIGH

STANDARD BRIDGE APPROACH SLAB FOR PRESTRESSED CONCRETE CORED SLAB UNIT (SUB-REGIONAL TIER) 90° SKEW

REVISIONS						SHEET NO.
NO.	BY:	DATE:	NO.	BY:	DATE:	21
1			3			TOTAL SHEETS
2			4			28

ASSEMBLED BY : B. L. GREEN	DATE : 11/7/12
CHECKED BY : N. RUFFIN	DATE : 12/17/12
DRAWN BY : SHS/MAA 5-09	REV. 12-11 MAA/AAC
CHECKED BY : BCH 5-09	

15-JAN-2013 12:08
S:\DPG\TIm\Division 1 LIBR\17BP.1.R.9\bgreen\17BP.1.R.9_SD_CS.dgn
tcoggins

STD. NO. BAS_30_90S

DIVISION OF HIGHWAYS
STATE OF NORTH CAROLINA

SOIL STABILIZATION TIMEFRAMES

SITE DESCRIPTION	STABILIZATION TIME	TIMEFRAME EXCEPTIONS
PERIMETER DIKES, SWALES, DITCHES AND SLOPES	7 DAYS	NONE
HIGH QUALITY WATER (HQW) ZONES	7 DAYS	NONE
SLOPES STEEPER THAN 3:1	7 DAYS	IF SLOPES ARE 10' OR LESS IN LENGTH AND ARE NOT STEEPER THAN 2:1, 14 DAYS ARE ALLOWED.
SLOPES 3:1 OR FLATTER	14 DAYS	7 DAYS FOR SLOPES GREATER THAN 50' IN LENGTH.
ALL OTHER AREAS WITH SLOPES FLATTER THAN 4:1	14 DAYS	NONE, EXCEPT FOR PERIMETERS AND HQW ZONES.

WBS # 17BP.1.R.9

CONTRACT #:

PROJECT: 17BP.1.R.9

DARE COUNTY

STATION: 13+05.93 -L-

REPLACES BRIDGE NO. 270042

STATE OF NORTH CAROLINA
DEPARTMENT OF TRANSPORTATION
RALEIGH

EROSION CONTROL PLAN

BRIDGE ON SR 1123 OVER
CROATAN TIDAL FLOW

27'-10" CLEAR ROADWAY - 90° SKEW

REVISIONS						SHEET NO.
NO.	BY:	DATE:	NO.	BY:	DATE:	EC-1
1			1			TOTAL SHEETS
2			2			28

EROSION CONTROL PLAN

CONTRACT #:

WBS # 17BP.1.R.9

EXIST BRIDGE NO. 270042
27'-0" CLEAR ROADWAY
SPANS: 18'@18'
CONC. DECK
TIMBER PILINGS
WOODEN WINGWALLS

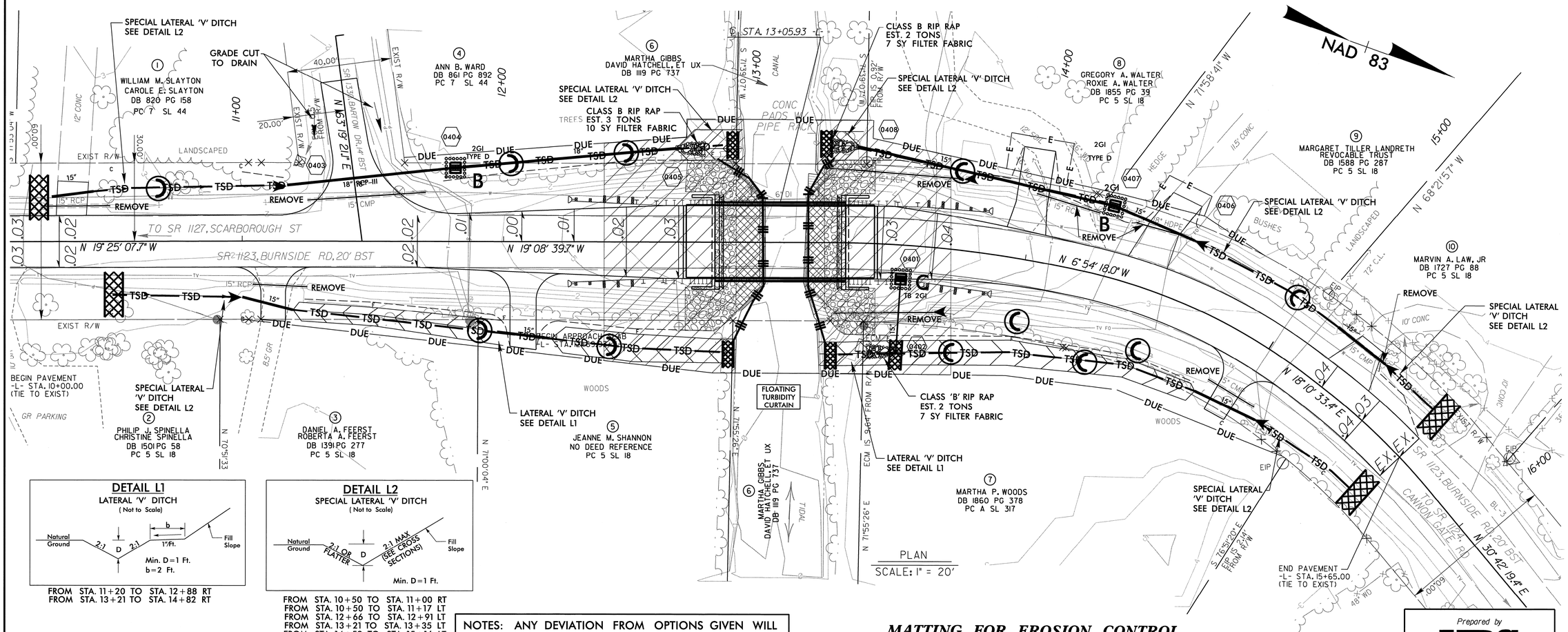

DETAIL L1
LATERAL 'V' DITCH
(Not to Scale)

FROM STA. 11+20 TO STA. 12+88 RT
FROM STA. 13+21 TO STA. 14+82 RT

DETAIL L2
SPECIAL LATERAL 'V' DITCH
(Not to Scale)

FROM STA. 10+50 TO STA. 11+00 RT
FROM STA. 10+50 TO STA. 11+17 LT
FROM STA. 12+66 TO STA. 12+91 LT
FROM STA. 13+21 TO STA. 13+35 LT
FROM STA. 14+59 TO STA. 15+16 LT
FROM STA. 15+38 TO STA. 15+65 LT
FROM STA. 15+11 TO STA. 15+50 RT

PUBLIC TRUST WATERS
HIGH QUALITY WATER

METHOD II MODIFIED CLEARING

ROADSIDE ENVIRONMENTAL UNIT
DEPARTMENT OF TRANSPORTATION
DIVISION OF HIGHWAYS
RALEIGH, N.C.

2012 STANDARD SPECIFICATIONS

THESE EROSION AND SEDIMENT CONTROL PLANS COMPLY WITH THE REGULATIONS SET FORTH BY THE NCG-010000 GENERAL CONSTRUCTION PERMIT EFFECTIVE AUGUST 3, 2011 ISSUED BY THE NORTH CAROLINA DEPARTMENT OF ENVIRONMENT AND NATURAL RESOURCES DIVISION OF WATER QUALITY.

NOTES: ANY DEVIATION FROM OPTIONS GIVEN WILL REQUIRE PRIOR APPROVAL BY ENGINEER.

ADDITIONAL EROSION CONTROL DEVICES MAY NEED TO BE INSTALLED AS DIRECTED BY THE ENGINEER.

Std. #	Description	Symbol
1605.01	Temporary Silt Fence	
1607.01	Gravel Construction Entrance	
1630.03	Temporary Silt Ditch	TSD
1631.01	Matting Installation	
1632.02	Rock Inlet Sediment Trap Type B	B
1632.03	Rock Inlet Sediment Trap Type C	C
1633.01	Rock Silt Check A	
1633.02	Temporary Rock Silt Check Type-B	
N/A	Coir Fiber Wattle with Polyacrylamide (PAM)	

MATTING FOR EROSION CONTROL

CONST SHEET NO.	LINE	FROM STATION	TO STATION	SIDE	ESTIMATE (SY)
4	-L-	11+85	12+91	LT	190
4	-L-	13+21	14+26	LT	175
				SUBTOTAL	365
MISCELLANEOUS MATTING TO BE INSTALLED AS DIRECTED BY THE ENGINEER					275
				TOTAL	640
				SAY	640

ENVIRONMENTALLY SENSITIVE AREA
SEE PROJECT SPECIAL PROVISIONS

NOTE:
PERIMETER EROSION CONTROL MEASURES SHALL BE INSTALLED DURING CLEARING AND GRUBBING PHASE.

INSTALL MATTING FOR EROSION CONTROL IN THE PROPOSED DITCH LINE.

MEME DIAZ, P.E.
LEVEL IIIA NAME

675
LEVEL IIIA CERTIFICATION NO.

Prepared by
URS
URS Corporation - North Carolina
1600 Perimeter Park Drive, Suite 400
Morrisville, NC 27560
PHONE: (919) 461-1100 FAX: (919) 461-1415
NC LIC. • C-2243

PROJECT: 17BP.1.R.9
DARE COUNTY
STATION: 13+05.93 -L-
REPLACES BRIDGE NO. 270042

STATE OF NORTH CAROLINA
DEPARTMENT OF TRANSPORTATION
RALEIGH

EROSION CONTROL PLAN

BRIDGE ON SR 1123 OVER CROATAN TIDAL FLOW

27'-10" CLEAR ROADWAY - 90° SKEW

REVISIONS						SHEET NO.
NO.	BY:	DATE:	NO.	BY:	DATE:	EC-2
1			1			TOTAL SHEETS
2			2			28

WBS # 17BP.1.R.9

CONTRACT #:

COIR FIBER WATTLE WITH POLYACRYLAMIDE (PAM) DETAIL

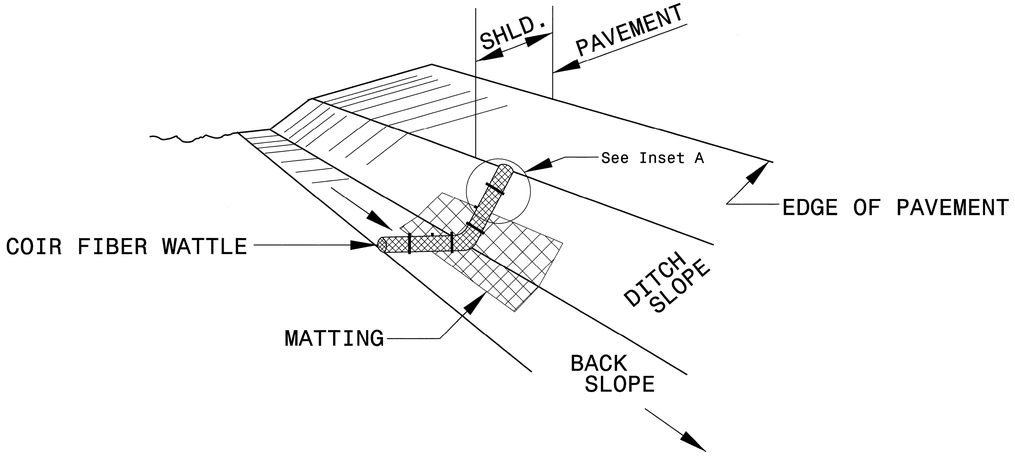

ISOMETRIC VIEW

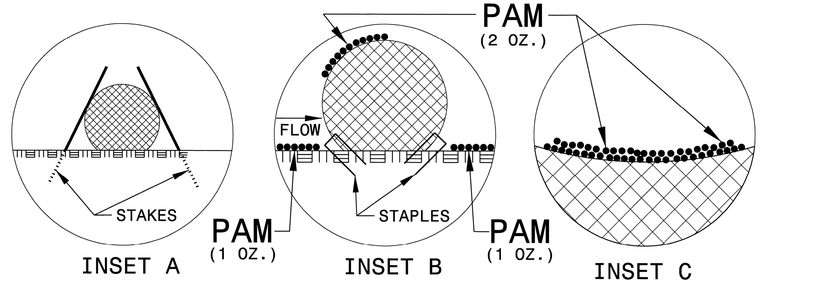

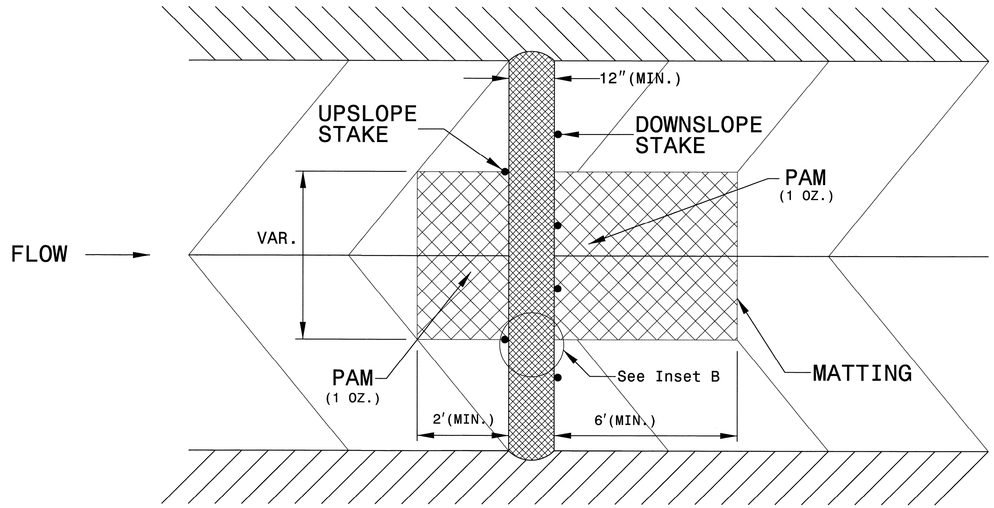

TOP VIEW

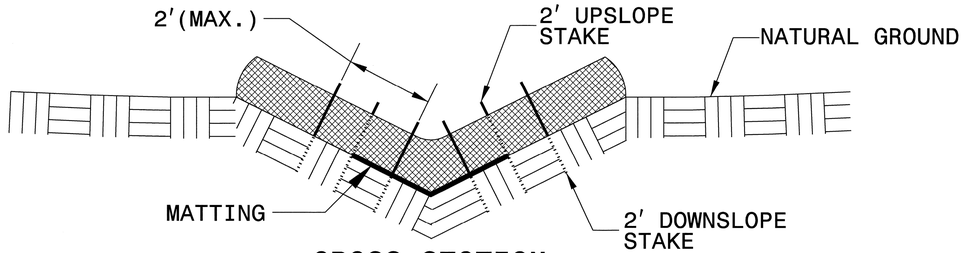

CROSS SECTION VEE DITCH

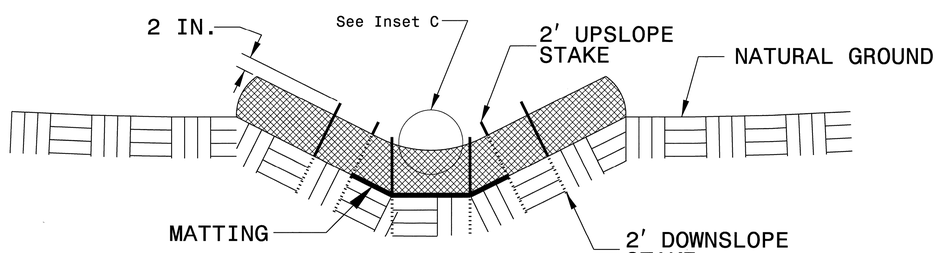

CROSS SECTION TRAPEZOIDAL DITCH

NOTES:

USE MINIMUM 12 IN. DIAMETER COIR FIBER (COCONUT FIBER) WATTLE.

USE 2 FT. WOODEN STAKES WITH A 2 IN. BY 2 IN. NOMINAL CROSS SECTION.

ONLY INSTALL WATTLE(S) TO A HEIGHT IN DITCH SO FLOW WILL NOT WASH AROUND WATTLE AND SCOUR DITCH SLOPES AND AS DIRECTED.

INSTALL A MINIMUM OF 2 UPSLOPE STAKES AND 4 DOWNSLOPE STAKES AT AN ANGLE TO WEDGE WATTLE TO BOTTOM OF DITCH.

PROVIDE STAPLES MADE OF 0.125 IN. DIAMETER STEEL WIRE FORMED INTO A U SHAPE NOT LESS THAN 12" IN LENGTH.

INSTALL STAPLES APPROXIMATELY EVERY 1 LINEAR FOOT ON BOTH SIDES OF WATTLE AND AT EACH END TO SECURE IT TO THE SOIL.

INSTALL MATTING IN ACCORDANCE WITH SECTION 1631 OF THE STANDARD SPECIFICATIONS.

PRIOR TO POLYACRYLAMIDE (PAM) APPLICATION, OBTAIN A SOIL SAMPLE FROM PROJECT LOCATION, AND FROM OFFSITE MATERIAL, AND ANALYZE FOR APPROPRIATE PAM FLOCCULANT TO BE APPLIED TO EACH WATTLE.

INITIALLY APPLY 2 OUNCES OF ANIONIC OR NEUTRALLY CHARGED PAM OVER WATTLE WHERE WATER WILL FLOW AND 1 OUNCE OF PAM ON MATTING ON EACH SIDE OF WATTLE. REAPPLY PAM AFTER EVERY RAINFALL EVENT THAT IS EQUAL TO OR EXCEEDS 0.50 IN.

PROJECT: 17BP.1.R.9

DARE COUNTY

STATION: 13+05.93 -L-

REPLACES BRIDGE NO. 270042

STATE OF NORTH CAROLINA
DEPARTMENT OF TRANSPORTATION
RALEIGH

EROSION CONTROL PLAN

BRIDGE ON SR 1123 OVER CROATAN TIDAL FLOW

27'-10" CLEAR ROADWAY - 90° SKEW

REVISIONS						SHEET NO.
NO.	BY:	DATE:	NO.	BY:	DATE:	EC-3
1			1			TOTAL SHEETS
2			2			28

WBS # 17BP.1.R.9

CONTRACT #:

STATE OF
NORTH CAROLINA
DEPT. OF TRANSPORTATION
DIVISION OF HIGHWAYS
RALEIGH, N.C.

7-06

ENGLISH STANDARD DRAWING FOR

GRAVEL CONSTRUCTION ENTRANCE

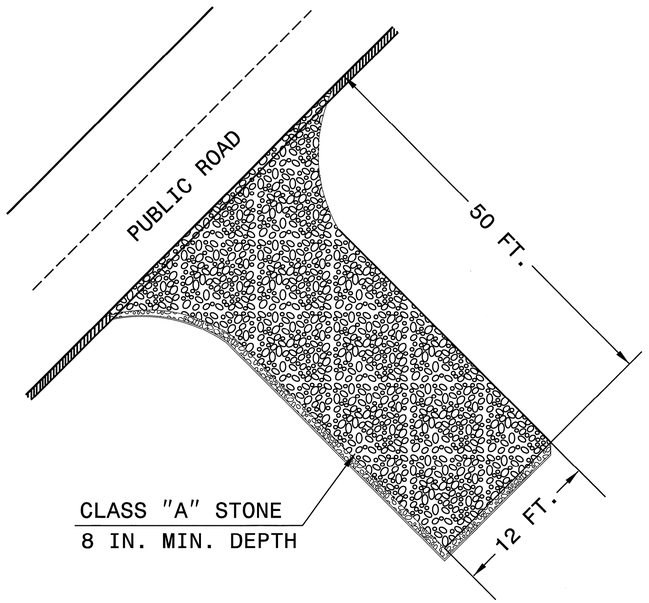

NOTES:
1. PROVIDE TURNING RADIUS SUFFICIENT TO ACCOMMODATE LARGE TRUCKS.
2. LOCATE ENTRANCE(S) TO PROVIDE FOR UTILIZATION BY ALL CONSTRUCTION VEHICLES.
3. MUST BE MAINTAINED IN A CONDITION WHICH WILL PREVENT TRACKING OR DIRECT FLOW OF MUD ONTO STREETS. PERIODIC TOPDRESSING WITH STONE WILL BE NECESSARY.
4. ANY MATERIAL TRACKED ONTO THE ROADWAY MUST BE CLEANED UP IMMEDIATELY.
5. LOCATE GRAVEL CONSTRUCTION ENTRANCE AT ALL POINTS OF INGRESS AND EGRESS UNTIL SITE IS STABILIZED. PROVIDE FREQUENT CHECKS OF THE DEVICE AND TIMELY MAINTENANCE.
6. NUMBER AND LOCATION OF CONSTRUCTION ENTRANCES TO BE DETERMINED BY THE ENGINEER.
7. USE CLASS 'A' STONE OR OTHER COARSE AGGREGATE APPROVED BY THE ENGINEER.

NOTE: PLACE FILTER FABRIC BENEATH STONE

SHEET 1 OF 1

1607.01

STATE OF
NORTH CAROLINA
DEPT. OF TRANSPORTATION
DIVISION OF HIGHWAYS
RALEIGH, N.C.

7-06

ENGLISH STANDARD DRAWING FOR

GRAVEL CONSTRUCTION ENTRANCE

SHEET 1 OF 1

1607.01

PROJECT: 17BP.1.R.9

DARE COUNTY

STATION: 13+05.93 -L-

REPLACES BRIDGE NO. 270042

STATE OF NORTH CAROLINA
DEPARTMENT OF TRANSPORTATION
RALEIGH

EROSION CONTROL PLAN

BRIDGE ON SR 1123 OVER
CROATAN TIDAL FLOW

27'-10" CLEAR ROADWAY - 90° SKEW

REVISIONS						SHEET NO.
NO.	BY:	DATE:	NO.	BY:	DATE:	EC-4
1			1			TOTAL SHEETS
2			2			28

WBS # 17BP.1.R.9

CONTRACT #:

PLANTING DETAILS

SEEDLING / LINER BAREROOT PLANTING DETAIL

HEALING IN

1. Locate a healing-in site in a shady, well protected area.

2. Excavate a flat bottom trench 12 inches deep and provide drainage.

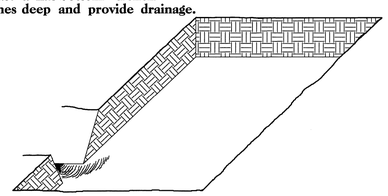

3. Backfill the trench with 2 inches well rotted sawdust. Place a 2 inch layer of well rotted sawdust at a sloping angle at one end of the trench.

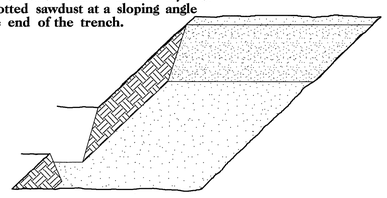

4. Place a single layer of plants against the sloping end so that the root collar is at ground level.

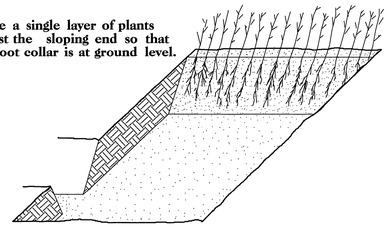

5. Place a 2 inch layer of well rotted sawdust over the roots maintaining a sloping angle.

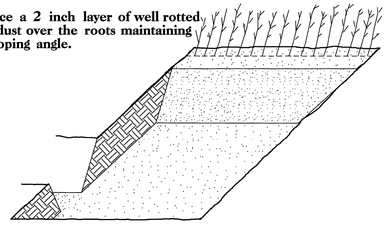

6. Repeat layers of plants and sawdust as necessary and water thoroughly.

DIBBLE PLANTING METHOD
USING THE KBC PLANTING BAR

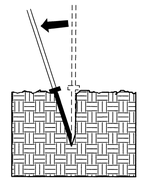

1. Insert planting bar as shown and pull handle toward planter.

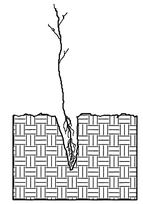

2. Remove planting bar and place seedling at correct depth.

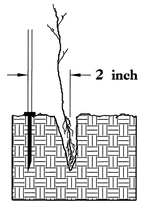

3. Insert planting bar 2 inches toward planter from seedling.

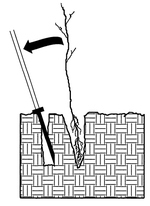

4. Pull handle of bar toward planter, firming soil at bottom.

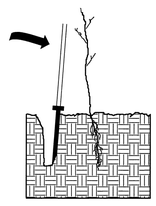

5. Push handle forward firming soil at top.

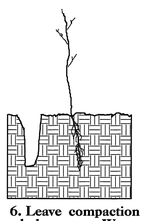

6. Leave compaction hole open. Water thoroughly.

PLANTING NOTES:

PLANTING BAG
During planting, seedlings shall be kept in a moist canvas bag or similar container to prevent the root systems from drying.

KBC PLANTING BAR
Planting bar shall have a blade with a triangular cross section, and shall be 12 inches long, 4 inches wide and 1 inch thick at center.

ROOT PRUNING
All seedlings shall be root pruned, if necessary, so that no roots extend more than 10 inches below the root collar.

REFORESTATION

☐ TREE REFORESTATION SHALL BE PLANTED 6 FT. TO 10 FT. ON CENTER, RANDOM SPACING, AVERAGING 8 FT. ON CENTER, APPROXIMATELY 680 PLANTS PER ACRE.

REFORESTATION

MIXTURE, TYPE, SIZE, AND FURNISH SHALL CONFORM TO THE FOLLOWING:

25%	LIRIODENDRON TULIPIFERA	TULIP POPLAR	12 in – 18 in BR
25%	PLATANUS OCCIDENTALIS	SYCAMORE	12 in – 18 in BR
25%	FRAXINUS PENNSYLVANICA	GREEN ASH	12 in – 18 in BR
25%	BETULA NIGRA	RIVER BIRCH	12 in – 18 in BR

REFORESTATION DETAIL SHEET

N.C.D.O.T. - ROADSIDE ENVIRONMENTAL UNIT

PROJECT: 17BP.1.R.9

DARE COUNTY

STATION: 13+05.93 -L-

REPLACES BRIDGE NO. 270042

STATE OF NORTH CAROLINA
DEPARTMENT OF TRANSPORTATION
RALEIGH

REFORESTATION DETAIL SHEET

BRIDGE ON SR 1123 OVER
CROATAN TIDAL FLOW

27'-10" CLEAR ROADWAY - 90° SKEW

REVISIONS						SHEET NO.
NO.	BY:	DATE:	NO.	BY:	DATE:	RF-1
1			1			TOTAL SHEETS
2			2			28

8/17/99

PROJECT REFERENCE NO.	SHEET NO.
17BP.1.R.9	U0-1

UTILITIES BY OTHERS

NOTE:
ALL PROPOSED UTILITY WORK SHOWN ON THIS SHEET WILL BE DONE BY OTHERS

MA Engineering
CONSULTANTS, INC.
598 East Chatham Street Suite 137 Cary, NC 27511
Phone: 919.297.0220 Fax: 919.297.0221

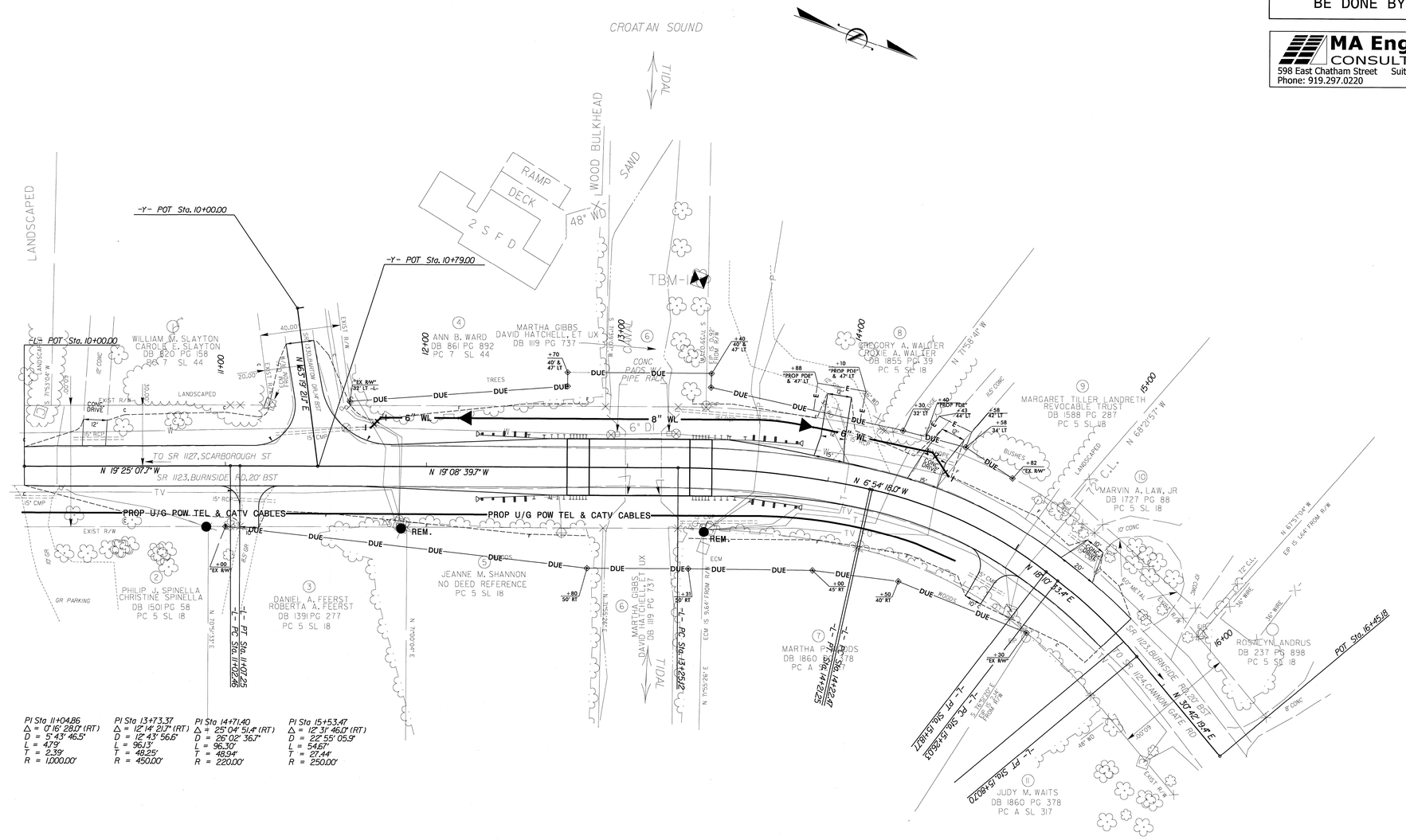

(1) POWER – Dominion Power
IAIN BRUCE (252) 255–2157

(2) TELEPHONE – Century Link
BRUCE HERRINGTON (252) 473–5373

(3) CATV – Charter Communications
CINDY MUSCIA (252) 715–2106

(4) WATER – Dare County Water
SAMMY MIDGETT (252) 475–9293

TOTAL SHEETS
28

3/26/2013
R:\DOT\Files\Rdy_Us\Proj\Dare\242_U0_U0-2.dgn
2:12:14 PM

5/28/99

PROFILE FOR U/G POWER, TELEPHONE, CATV

UTILITIES BY OTHERS

PROJECT REFERENCE NO.	SHEET NO.
17BP.1.R.9	U0-2

NOTE:
ALL PROPOSED UTILITY WORK SHOWN ON THIS SHEET WILL BE DONE BY OTHERS

MA Engineering CONSULTANTS, INC.
598 East Chatham Street Suite 137 Cary, NC 27511
Phone: 919.297.0220 Fax: 919.297.0221

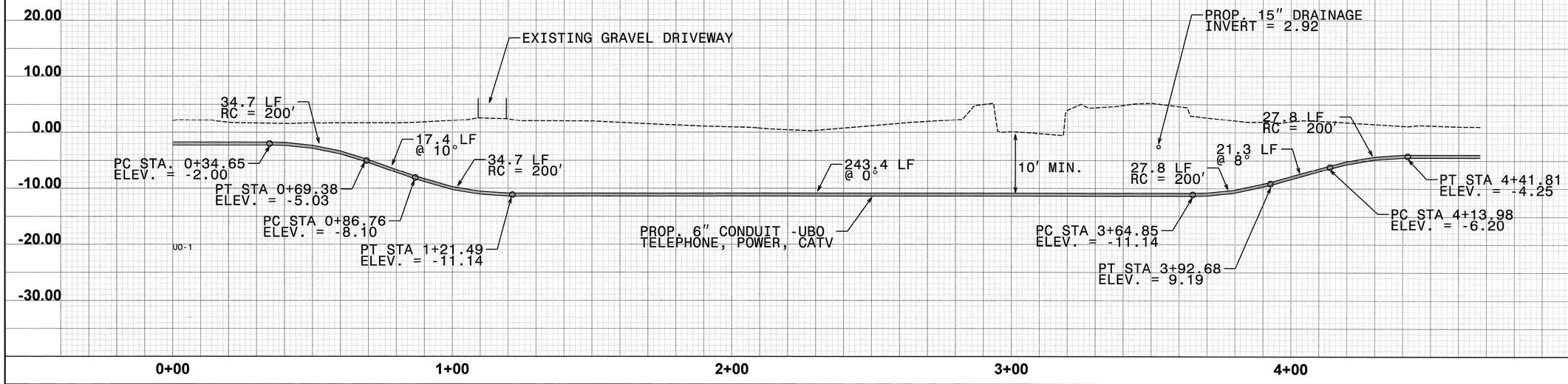

PROFILE FOR 8" WATERLINE

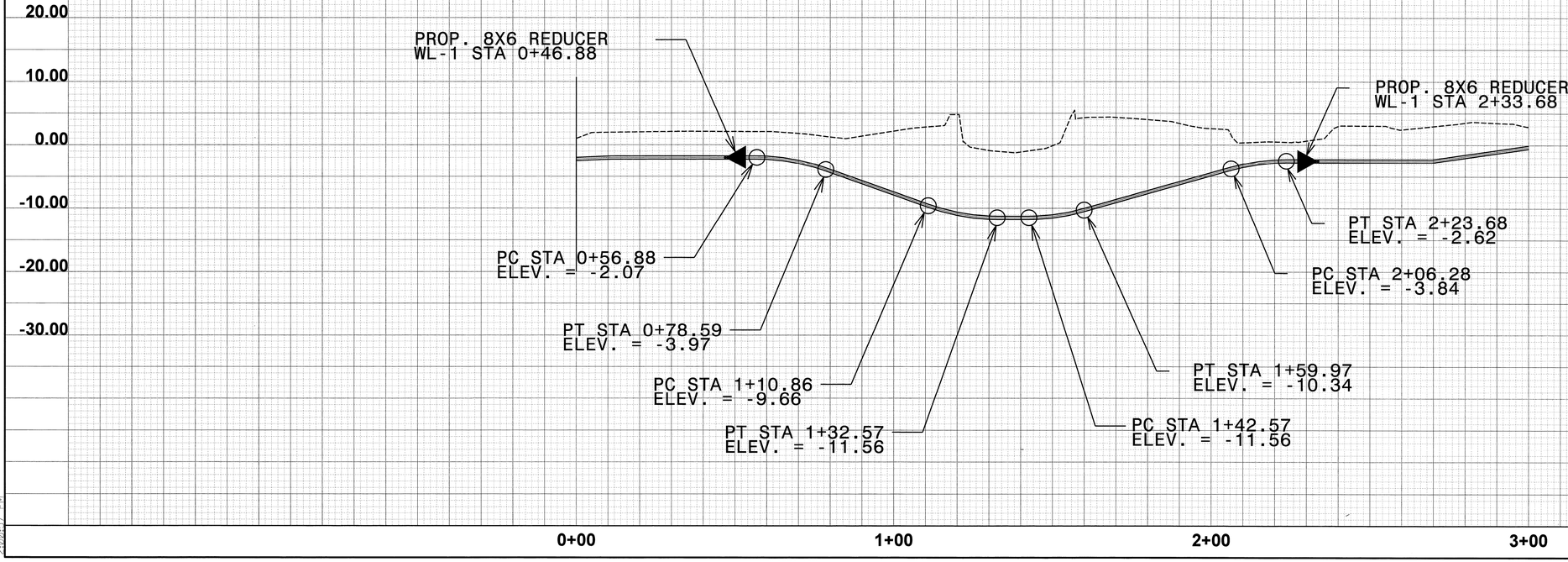

TOTAL SHEETS
28

3/26/2013
2:51:51 PM
C:\Users\Ray_Ut\Pro\Dare0142_U0_U0_3_.dgn