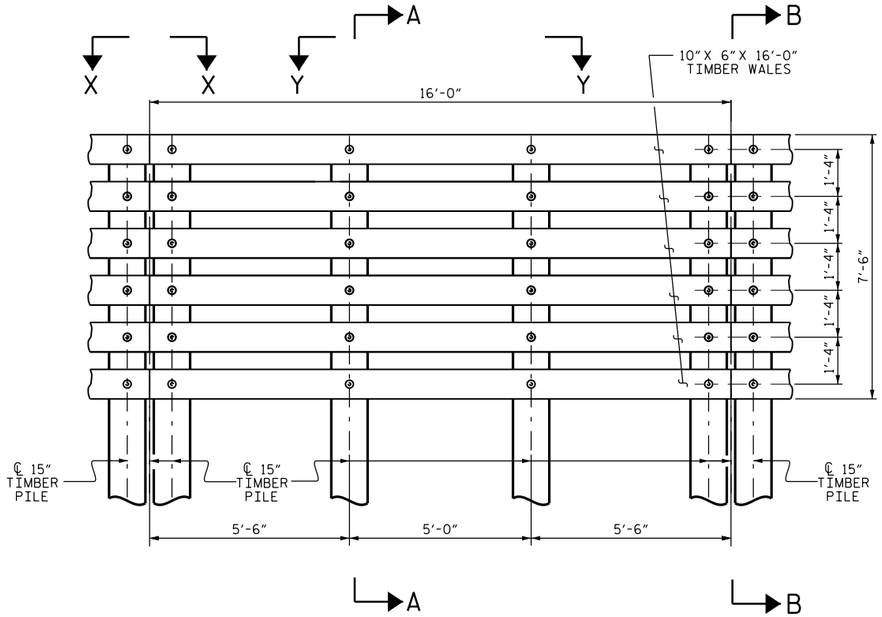

TYPICAL PANEL

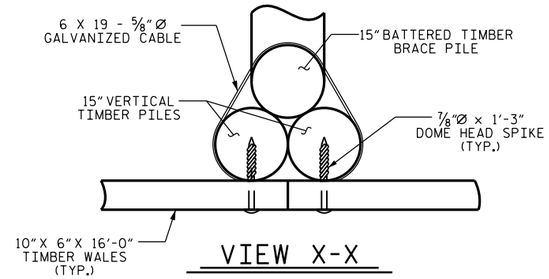

VIEW X-X

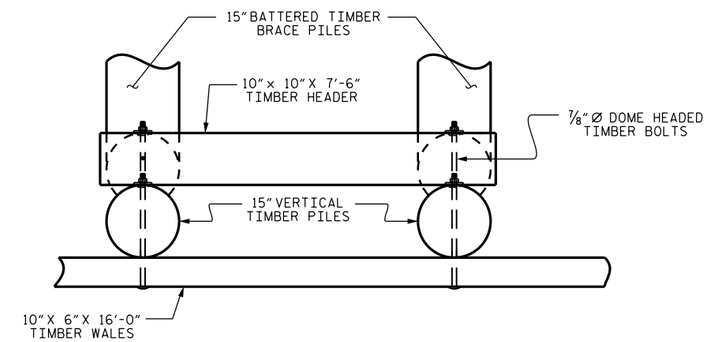

VIEW Y-Y

NOTES:

ALL DOME HEADS SHALL BE LOCATED AT THE FRONT FACE OF THE FENDER SYSTEM.

ON THE BACK SIDE OF FENDER SYSTEM THE BOLTS GOING THROUGH VERTICAL AND BATTERED PILES SHALL BE RECESSED TO ALLOW THE WASHER/NUT TO LIE FLUSH AGAINST THE PILE.

PILE CLUSTERS CONTAINING THREE PILES SHALL BE WRAPPED WITH THREE TURNS OF 6 X 19 - 5/8"Ø GALVANIZED CABLE AT LOCATION SPECIFIED AND SECURED WITH 3/8"Ø X 4" GALAVANIZED STAPLES AND TWO WIRE CLAMPS AT EACH END.

STAGGER TIMBER WALES IN THE MAIN WALL SO THAT ALTERNATE JOINTS BREAK EACH PILE.

BOLT TYPE TABLE

BOLT TYPE	LENGTH
1	24"
2	34"
3	38"
4	42"

ALL BOLT TYPES ARE 7/8"Ø DOME HEADED TIMBER BOLTS WITH O.G. WASHER & HEAVY HEX NUT

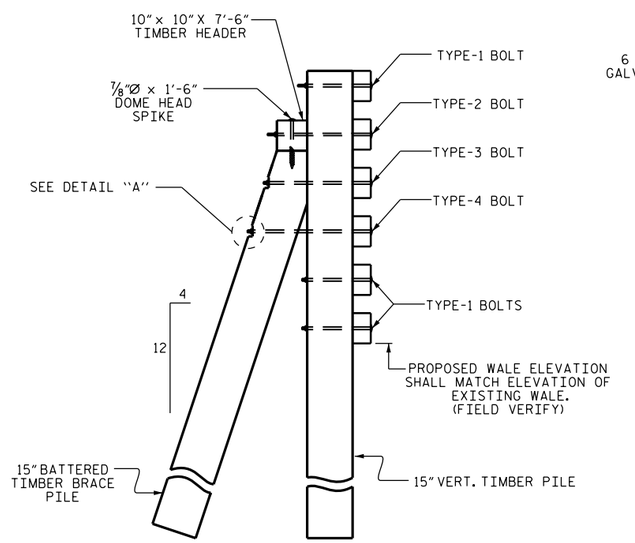

SECTION A-A

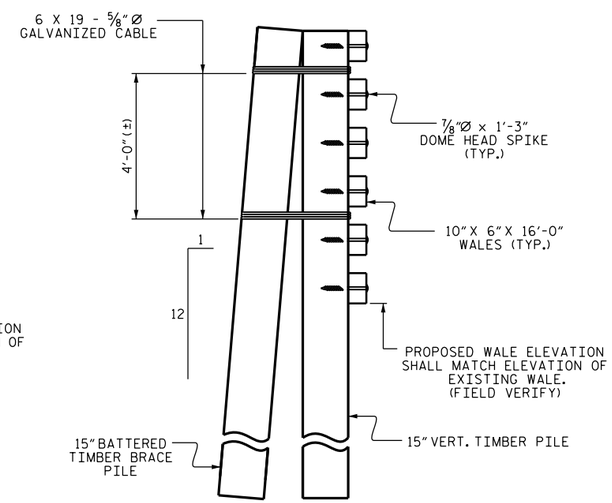

SECTION B-B

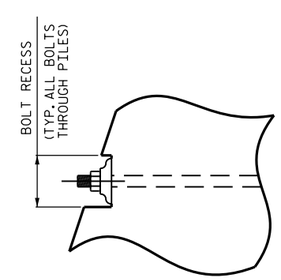

DETAIL "A"

PROJECT NO. 41732.7

DARE COUNTY

BRIDGE NO. 9

SHEET 1 OF 2

STATE OF NORTH CAROLINA
DEPARTMENT OF TRANSPORTATION
RALEIGH

FENDER SYSTEM DETAILS

DocuSigned by:
William M. Clarke
1EB20097EAAF437...

7/16/2015

NORTH CAROLINA PROFESSIONAL SEAL 40257 ENGINEER W. MATTHEW CLARKE

REVISIONS						SHEET NO.
NO.	BY:	DATE:	NO.	BY:	DATE:	F-4
1			3			TOTAL SHEETS
2			4			7

DRAWN BY : S. T. SANDOR DATE : 10/2014
CHECKED BY : M. A. LEE DATE : 10/2014

16-JUL-2015 11:43
S:\PRS\POC\Squad C\Fender_Jobs\DARE_9_41732.7\FINAL\DARE_9_SD_TypDEtalis.dgn
ssandor