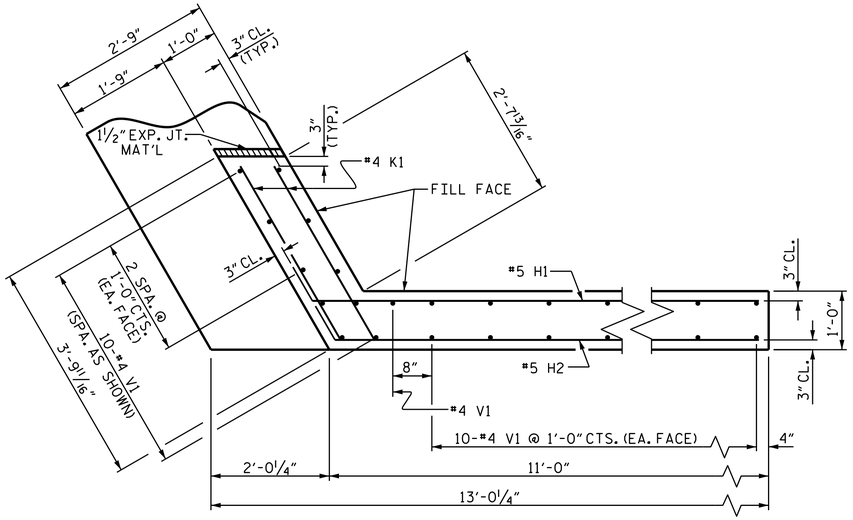

PLAN OF WING (W1)

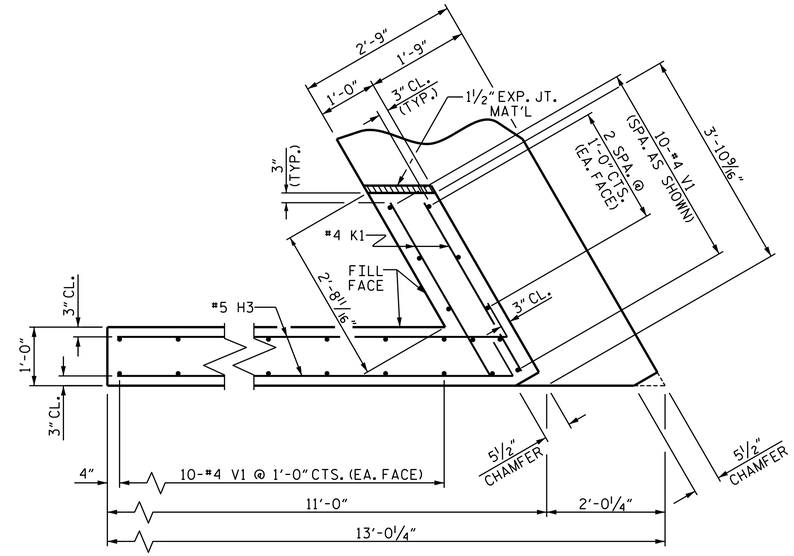

PLAN OF WING (W2)

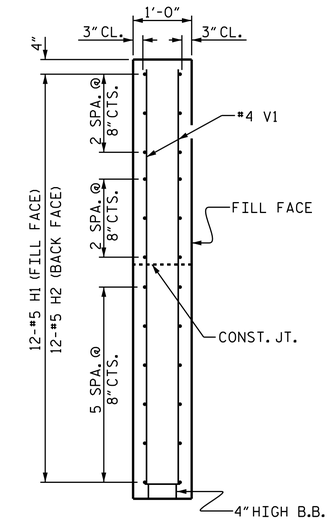

SECTION X-X

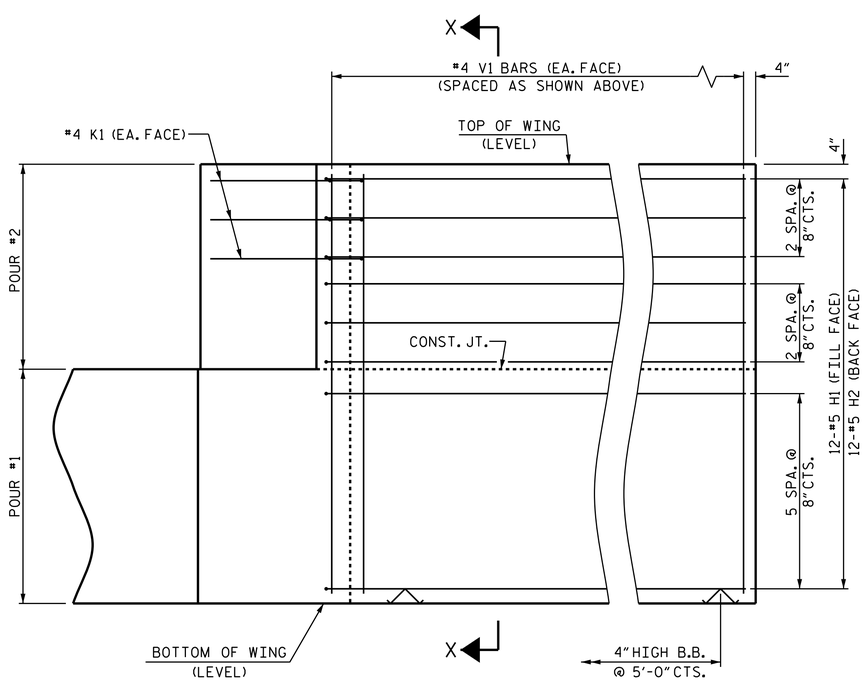

ELEVATION OF WING (W1)

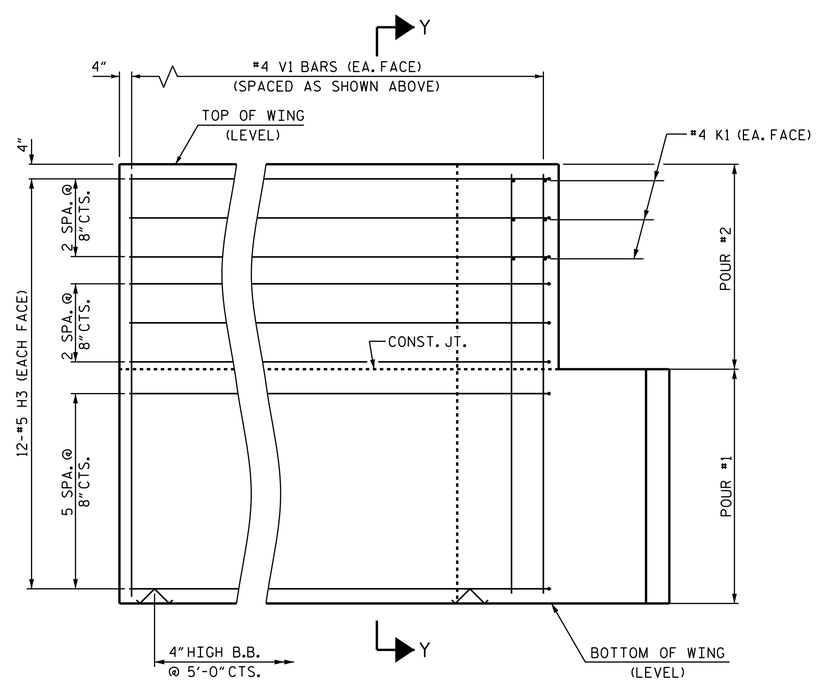

ELEVATION OF WING (W2)

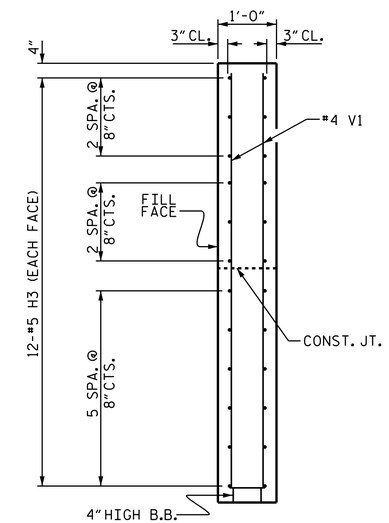

SECTION Y-Y

WING DETAILS

PROJECT NO. 17BP.1.R.62

WASHINGTON COUNTY

STATION: 15+69.80 -L-

SHEET 3 OF 4

STATE OF NORTH CAROLINA
DEPARTMENT OF TRANSPORTATION
RALEIGH

SUBSTRUCTURE

END BENT
WING DETAILS

NORTH CAROLINA PROFESSIONAL SEAL 22005 ENGINEER A. KEITH PASCHAL

DocuSigned by: A. Keith Paschal
F8B6AD6DB2FC48F...
4/24/2015

REVISIONS						SHEET NO.
NO.	BY:	DATE:	NO.	BY:	DATE:	S-12
1			3			TOTAL SHEETS
2			4			16

ASSEMBLED BY :	L.B.LACORTE	DATE : 3-25-15
CHECKED BY :	P.N.HOLDER	DATE : 4-10-15
DESIGN ENGINEER OF RECORD: :	L.B.LACORTE	DATE : 4-10-15

24-APR-2015 13:33
S:\DPGI\Division1\17BP.1.R.62\pnholder\17BP.1.R.62_SD_BX.dgn
kpaschal

STD. NO. EB_36_60S4_33BB