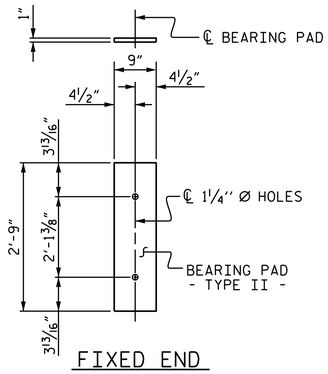

FIXED END

(TYPE II - 24 REQ'D)

ELASTOMERIC BEARING DETAILS

ELASTOMER IN ALL BEARINGS SHALL BE 60 DUROMETER HARDNESS.

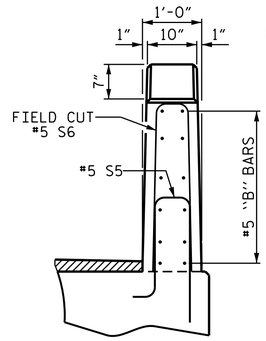

END VIEW

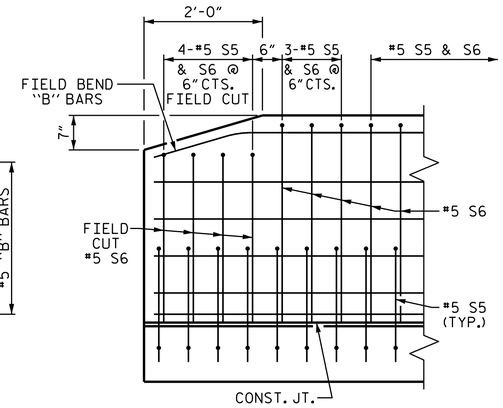

SIDE VIEW

END OF RAIL DETAILS

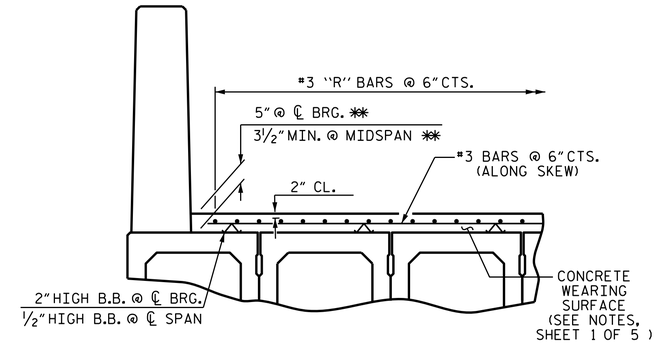

REINFORCING FOR CONCRETE WEARING SURFACE

✱✱ BASED ON PREDICTED FINAL CAMBER AND THEORETICAL GRADE LINE ELEVATIONS

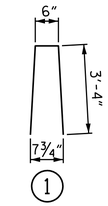

BAR TYPE

BAR DIMENSIONS ARE OUT TO OUT

GROOVING BRIDGE FLOORS	
APPROACH SLABS	648 SQ.FT.
BRIDGE DECK	2268 SQ.FT.
TOTAL	2916 SQ.FT.

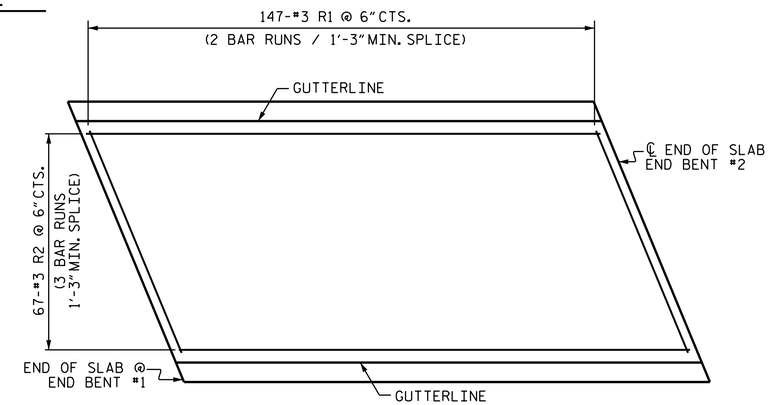

PLAN SHOWING CONCRETE WEARING SURFACE REINFORCING STEEL

BILL OF MATERIAL FOR CONCRETE WEARING SURFACE					
BAR	NO.	SIZE	TYPE	LENGTH	WEIGHT
✱R1	294	#3	STR	20'-0"	2211
✱R2	201	#3	STR	25'-5"	1921
✱ EPOXY COATED REINFORCING STEEL				LBS.	4132
CONCRETE WEARING SURFACE				SQ. FT.	2502

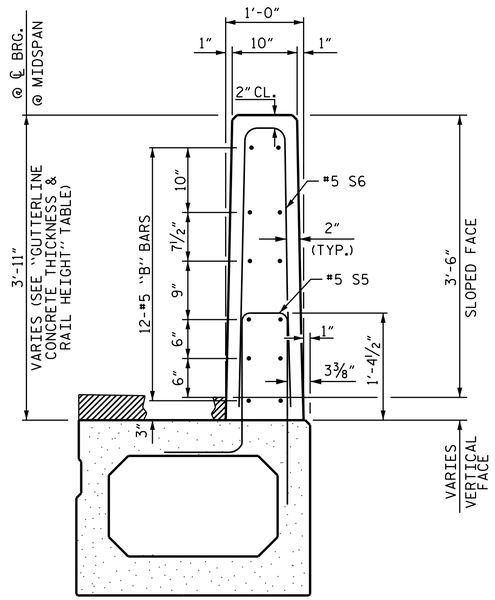

SECTION THRU RAIL

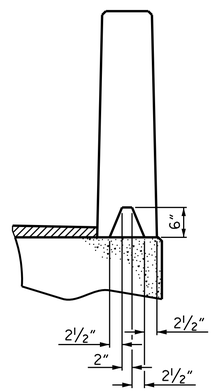

SECTION S-S

AT DAM IN OPEN JOINT
(THIS IS TO BE USED ONLY
WHEN SLIP FORM IS USED)

℄ ½" EXP. JT. MAT'L HELD IN
PLACE WITH GALVANIZED NAILS.
(NOTE: OMIT EXP. JT. MAT'L.
WHEN SLIP FORM IS USED)

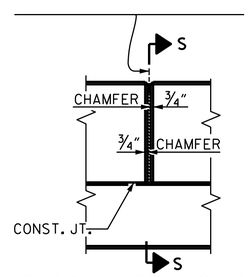

ELEVATION AT EXPANSION JOINTS

VERTICAL CONCRETE BARRIER RAIL DETAILS

BOX BEAM UNITS REQUIRED			
	NUMBER	LENGTH	TOTAL LENGTH
EXTERIOR B.B.	2	75'-0"	150'-0"
INTERIOR B.B.	10	75'-0"	750'-0"
TOTAL	12	———	900'-0"

GUTTERLINE CONCRETE THICKNESS & RAIL HEIGHT		
	CONCRETE OVERLAY THICKNESS @ MID-SPAN	RAIL HEIGHT @ MID-SPAN
75' UNIT	3½"	3'-9½"

BILL OF MATERIAL FOR VERTICAL CONCRETE BARRIER RAIL					
BAR	BARS PER PAIR OF EXTERIOR UNITS	SIZE	TYPE	LENGTH	WEIGHT
	75' UNIT				
✱ B7	144	#5	STR	14'-3"	2140
✱ S6	200	#5	1	7'-2"	1495
✱ EPOXY COATED REINFORCING STEEL			LBS.		3635
CLASS AA CONCRETE			CU.YDS.		19.4
TOTAL VERTICAL CONCRETE BARRIER RAIL			LN. FT.		150.0

PROJECT NO. 17BP.1.R.62

WASHINGTON COUNTY

STATION: 15+69.80 -L-

SHEET 5 OF 5

STATE OF NORTH CAROLINA
DEPARTMENT OF TRANSPORTATION
RALEIGH

3'-0" X 2'-9" PRESTRESSED CONCRETE BOX BEAM UNIT

NORTH CAROLINA PROFESSIONAL SEAL 22005 ENGINEER A. KEITH PASCHAL

DocuSigned by: A. Keith Paschal F886AD6DB2FC48F...

4/24/2015

REVISIONS						SHEET NO.
NO.	BY:	DATE:	NO.	BY:	DATE:	S-8
1			3			TOTAL SHEETS
2			4			16

ASSEMBLED BY : L.B.LACORTE DATE : 3-25-15
CHECKED BY : P.N.HOLDER DATE : 4-9-15
DESIGN ENGINEER OF RECORD: L.B.LACORTE DATE : 4-9-15

24-APR-2015 13:33
S:\DPGI\Division1\17BP.1.R.62\pnholder\17BP.1.R.62_SD_BX.dgn
kpaschal

STD. NO. 33PCBB8_60&120S