DocuSign Envelope ID: EA0FC0C6-7EE6-4188-B3D6-F8375E838F69

PROJECT REFERENCE NO.	SHEET NO.
17BP.1.R.62	2
WASHINGTON COUNTY BRIDGE NO.930003	
ROADWAY DESIGN ENGINEER	PAVEMENT DESIGN ENGINEER

NORTH CAROLINA PROFESSIONAL SEAL 10746 ENGINEER DENNIS K. THORNE
12/4/2015

Prepared by
URS
URS Corporation - North Carolina
1600 Perimeter Park Drive, Suite 400
Morrisville, NC 27560
PHONE: 919)461-1100 FAX: 919)461-1415
NC LIC.# C-2243

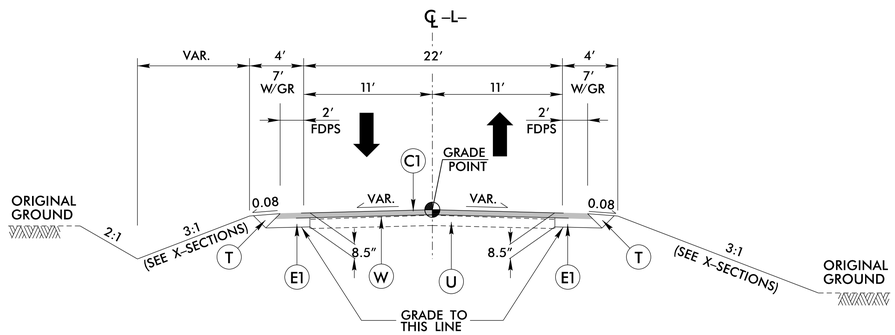

TYPICAL SECTION NO. 1

USE TYPICAL SECTION NO. 1
-L- STA. 12+40.00 TO -L- STA. 13+60.00
-L- STA. 16+80.00 TO -L- STA. 18+00.00

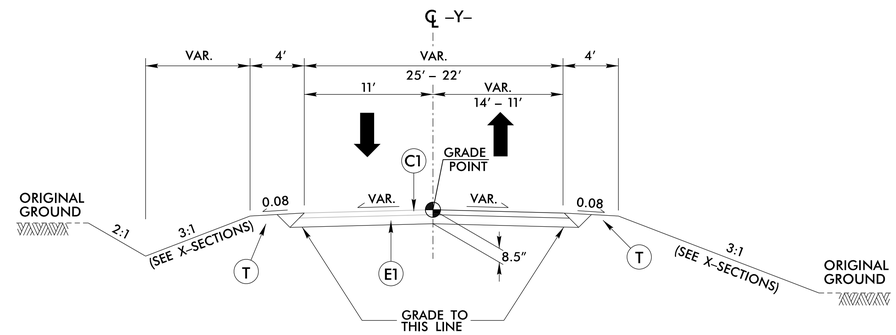

TYPICAL SECTION NO. 3

USE TYPICAL SECTION NO. 3
-Y- STA. 10+11.12 TO -Y- STA. 11+00.00

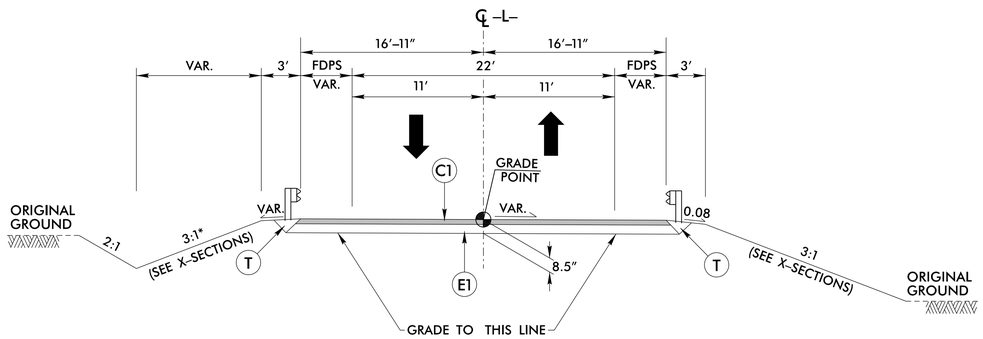

* 1.5:1 FROM 14+50.00 TO BEGIN BR. LT (WITH CLASS II RIP RAP)

TYPICAL SECTION NO. 2

USE TYPICAL SECTION NO. 2
-L- STA. 13+60.00 TO -L- STA. 15+32.30 (BEGIN BRIDGE)
-L- STA. 16+07.30 (END BRIDGE) TO -L- STA. 16+80.00

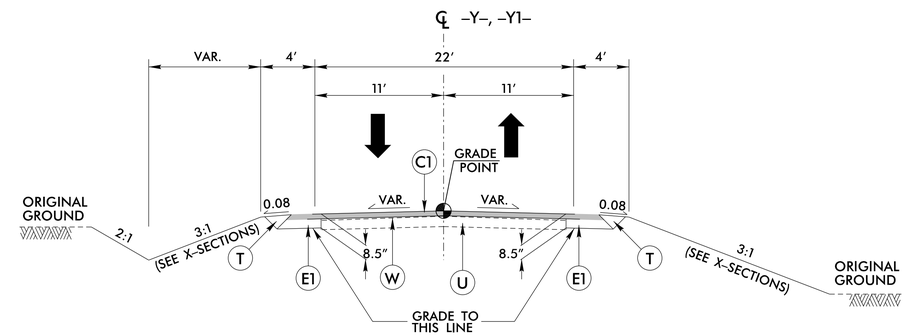

TYPICAL SECTION NO. 4

USE TYPICAL SECTION NO. 4
-Y- STA. 11+00.00 TO -Y- STA. 11+80.00
-Y1- STA. 10+25.00 TO -Y1- STA. 11+36.67

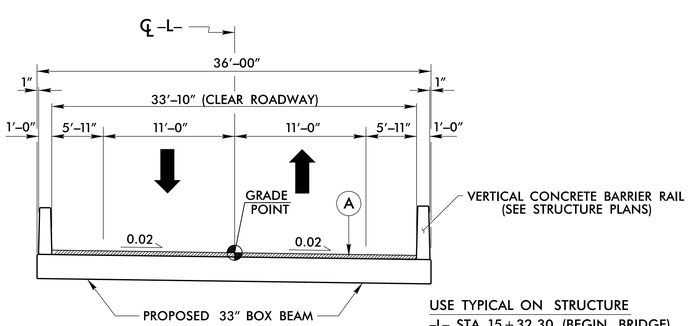

USE TYPICAL ON STRUCTURE
-L- STA. 15+32.30 (BEGIN BRIDGE)
TO -L- STA. 16+07.30END BRIDGE)

TYPICAL SECTION ON STRUCTURE (SEE STRUCTURE PLANS)

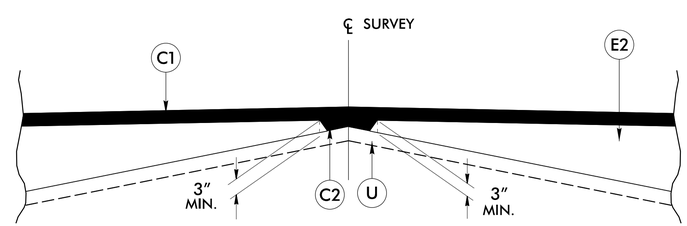

(W) DETAIL SHOWING METHOD OF WEDGING

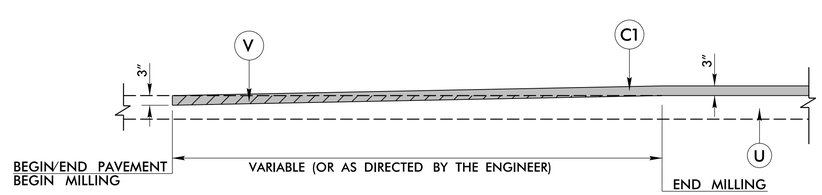

(V) TIE-IN MILLING DETAIL

NOTE: END MILLING WHERE PROPOSED GRADE IS 3″ ABOVE EXISTING PAVEMENT

PAVEMENT SCHEDULE

A	PROP. VAR. DEPTH PORTLAND CEMENT CONCRETE WEARING SURFACE.
C1	PROP. APPROX. 3″ ASPHALT CONCRETE SURFACE COURSE, TYPE SF9.5A, AT AN AVERAGE RATE OF 165 LBS. PER SQ. YD. IN EACH OF TWO LAYERS.
C2	PROP. VAR. DEPTH ASPHALT CONCRETE SURFACE COURSE, TYPE SF9.5A, AT AN AVERAGE RATE OF 110 LBS. PER SQ. YD. PER 1″ DEPTH. TO BE PLACED IN LAYERS NOT LESS THAN 1.0″ IN DEPTH OR GREATER THAN 1.5″ IN DEPTH.
E1	PROP. APPROX. 5.5″ ASPHALT CONCRETE BASE COURSE, TYPE B25.0B, AT AN AVERAGE RATE OF 627 LBS. PER SQ. YD.
E2	PROP. VAR. DEPTH ASPHALT CONCRETE BASE COURSE, TYPE B25.0B, AT AN AVERAGE RATE OF 114 LBS. PER SQ. YD. PER 1″ DEPTH. TO BE PLACED IN LAYERS NOT LESS THAN 3″ IN DEPTH OR GREATER THAN 5.5″ IN DEPTH.
T	EARTH MATERIAL.
U	EXISTING PAVEMENT.
V	TIE-IN MILLING.
W	VARIABLE DEPTH ASPHALT PAVEMENT (SEE WEDGING DETAIL)

NOTE: PAVEMENT EDGE SLOPES ARE 1:1 UNLESS SHOWN OTHERWISE.

6/2/99

12/4/2015
R:\Roadway\Proj\Wash03_rdy_typ.dgn
lisa.anderson