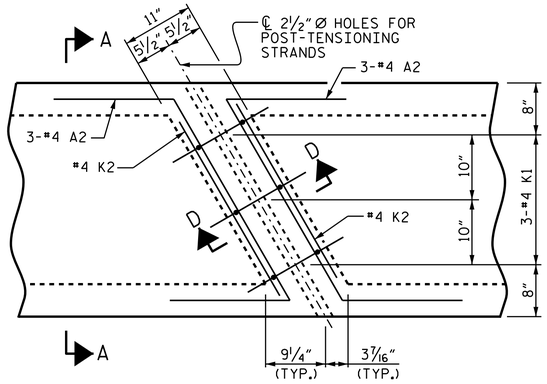

PLAN

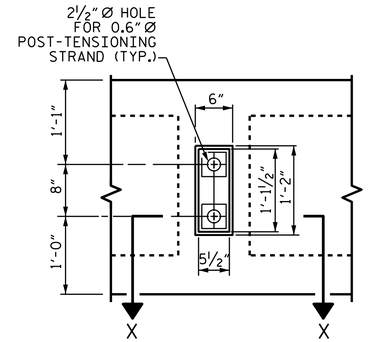

VIEW Y-Y

SHOWING ELEVATION VIEW OF GROUTED RECESS

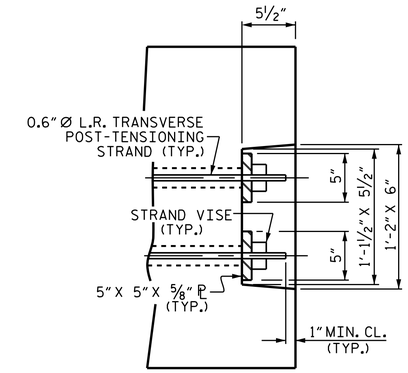

DETAIL "C"

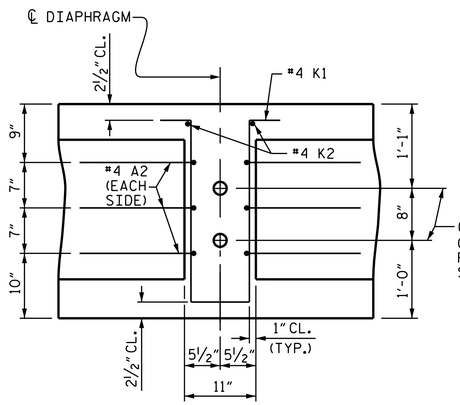

SECTION D-D

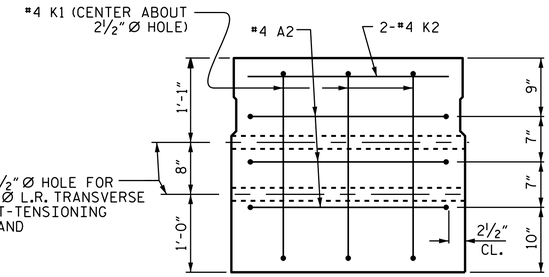

SECTION A-A

VOIDS NOT SHOWN

DOUBLE DIAPHRAGM DETAILS

#4 "S" BARS NOT SHOWN. #4 "S" BARS MAY BE SHIFTED SLIGHTLY TO CLEAR 2½" Ø HOLE.

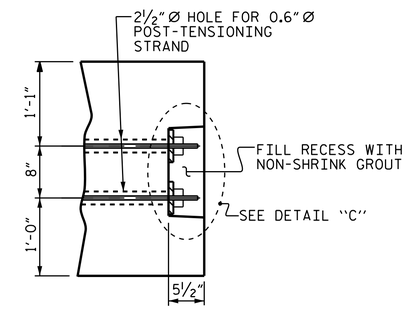

PART SECTION AT RECESS

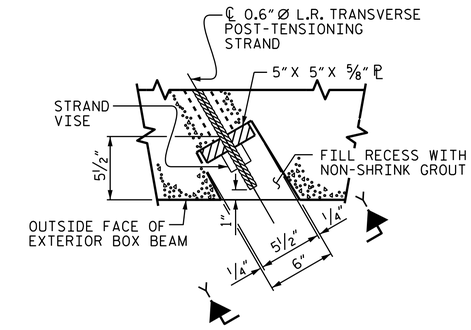

SECTION X-X

SHOWING PLAN VIEW OF GROUTED RECESS

GROUTED RECESS DETAIL AT END OF POST-TENSIONED STRANDS OF EXTERIOR BOX BEAM

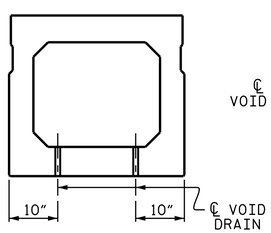

SECTION B-B

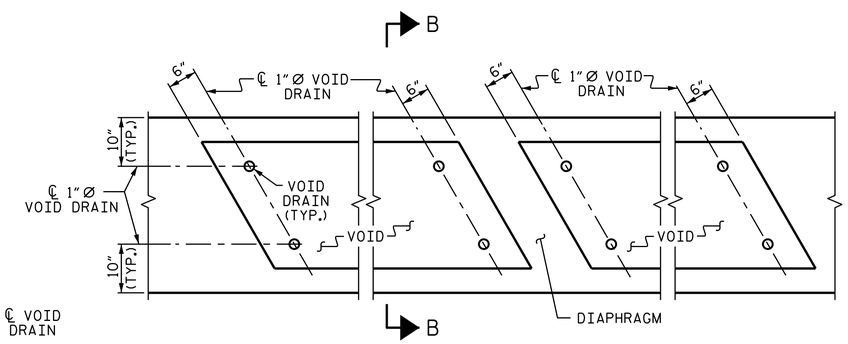

PART PLAN

VOID DRAIN DETAILS

(DIMENSIONS SHOWN ARE TYPICAL FOR EACH VOID)

DEAD LOAD DEFLECTION AND CAMBER	
	3'-0" x 2'-9"
75' BOX BEAM UNIT (NC & SE)	0.6" Ø L.R. STRAND
CAMBER (SLAB ALONE IN PLACE)	1¹³⁄₁₆" ↑
DEFLECTION DUE TO SUPERIMPOSED DEAD LOAD	⁵⁄₁₆" ↓
FINAL CAMBER	1½" ↑

PROJECT NO. 17BP.1.R.62

WASHINGTON COUNTY

STATION: 15+69.80 -L-

SHEET 4 OF 5

NORTH CAROLINA PROFESSIONAL SEAL 22005 ENGINEER A. KEITH PASCHAL

DocuSigned by: A. Keith Paschal F8B6AD6DB2FC48F...

4/24/2015

STATE OF NORTH CAROLINA
DEPARTMENT OF TRANSPORTATION
RALEIGH

STANDARD

3'-0" X 2'-9"
PRESTRESSED CONCRETE
BOX BEAM UNIT

REVISIONS						SHEET NO.
NO.	BY:	DATE:	NO.	BY:	DATE:	S-7
1			3			TOTAL SHEETS
2			4			16

ASSEMBLED BY : L.B.LACORTE DATE : 3-25-15
CHECKED BY : P.N.HOLDER DATE : 4-9-15
DESIGN ENGINEER OF RECORD: L.B.LACORTE DATE : 4-9-15

24-APR-2015 13:33
S:\DPG1\Division1\17BP.1.R.62\pnholder\17BP.1.R.62_SD_BX.dgn
kpaschal

STD.NO.33PCBB5_60S