NOTES :

FOR BERM WIDTH DIMENSIONS, SEE GENERAL DRAWING.

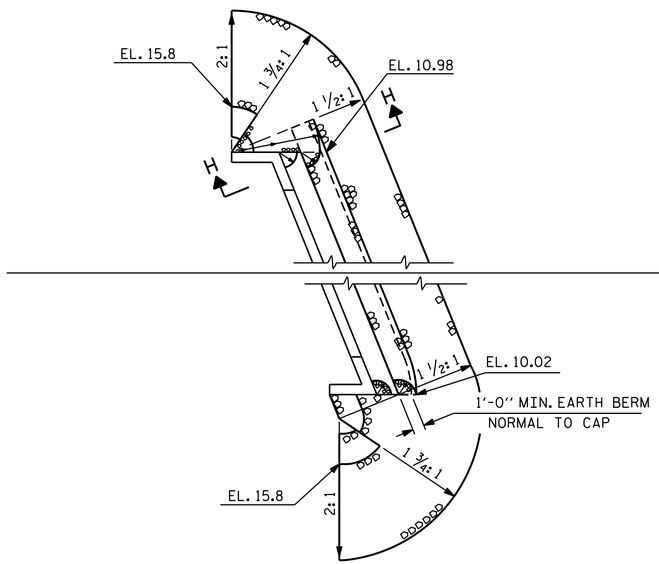

END BENT 1

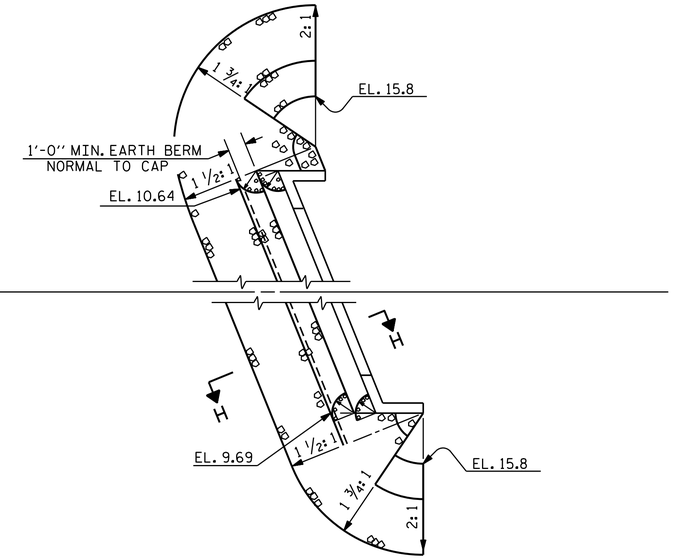

END BENT 2

ESTIMATED QUANTITIES		
BRIDGE @ STA. 15+69.80 -L-	RIP RAP CLASS II (2'-0" THICK)	GEOTEXTILE FOR DRAINAGE
	TONS	SQUARE YARDS
END BENT 1	77	86
END BENT 2	89	99

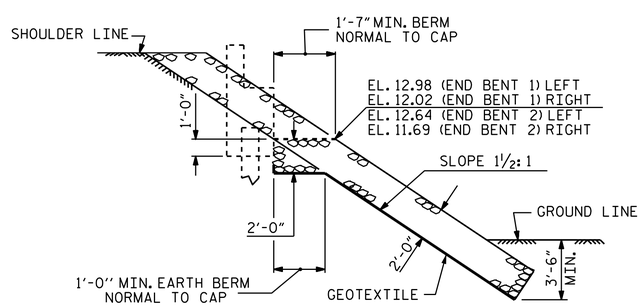

SECTION H-H

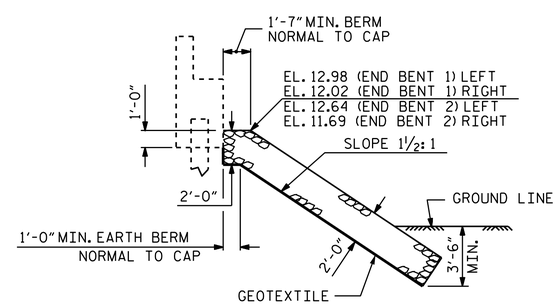

℄ SECTION

BERM RIP RAPPED

PROJECT NO. 17BP.1.R.62

WASHINGTON COUNTY

STATION: 15+69.80 -L-

STATE OF NORTH CAROLINA
DEPARTMENT OF TRANSPORTATION
RALEIGH

STANDARD

RIP RAP DETAILS

NORTH CAROLINA PROFESSIONAL SEAL 22005 ENGINEER A. KEITH PASCHAL

DocuSigned by: A. Keith Paschal F8B6AD6DB2FC48F...

4/24/2015

REVISIONS							SHEET NO.
NO.	BY:	DATE:	NO.	BY:	DATE:		S-14
1			3				TOTAL SHEETS
2			4				16

ASSEMBLED BY : L.B.LACORTE	DATE : 3-25-15		
CHECKED BY : P.N.HOLDER	DATE : 4-10-25		
DRAWN BY : REK 1/84	REV. 5/1/06R	TLA/GM	
CHECKED BY : RDU 1/84	REV. 10/1/11	MAA/GM	
	REV. 12/21/11	MAA/GM	

24-APR-2015 13:33
S:\DPG1\Division1\17BP.1.R.62\pnholder\17BP.1.R.62_SD_BX.dgn
kpaschal

STD. NO. RR1 (Sht 1)