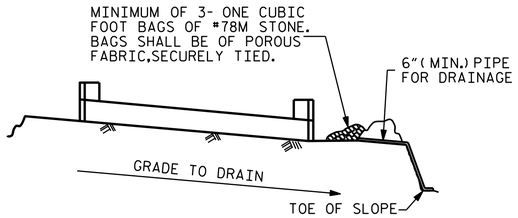

BAGGED STONE AND PIPE SHALL BE PLACED IMMEDIATELY AFTER COMPLETION OF END BENT EXCAVATION. PIPE MAY BE EITHER CONCRETE, CORRUGATED STEEL, CORRUGATED ALUMINUM ALLOY, OR CORRUGATED PLASTIC. PERFORATED PIPE WILL NOT BE ALLOWED.

BAGGED STONE SHALL REMAIN IN PLACE UNTIL THE ENGINEER DIRECTS THAT IT BE REMOVED. THE CONTRACTOR SHALL REMOVE AND DISPOSE OF SILT ACCUMULATIONS AT BAGGED STONE WHEN SO DIRECTED BY THE ENGINEER. BAGS SHALL BE REMOVED AND REPLACED WHENEVER THE ENGINEER DETERMINES THAT THEY HAVE DETERIORATED AND LOST THEIR EFFECTIVENESS.

NO SEPARATE PAYMENT WILL BE MADE FOR THIS WORK AND THE ENTIRE COST OF THIS WORK SHALL BE INCLUDED IN THE UNIT CONTRACT PRICE BID FOR THE SEVERAL PAY ITEMS.

TEMPORARY DRAINAGE AT END BENT

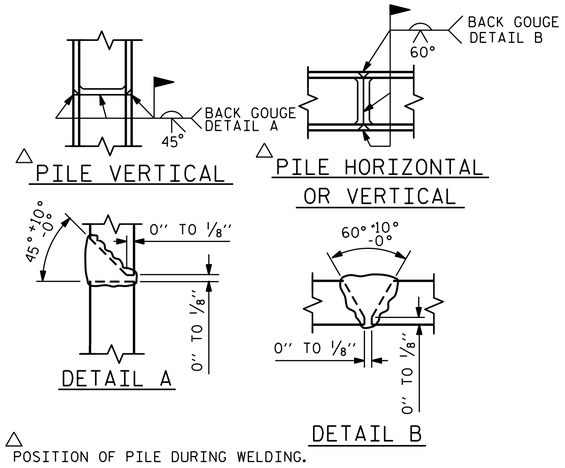

△ POSITION OF PILE DURING WELDING.

PILE SPLICE DETAILS

BAR TYPES

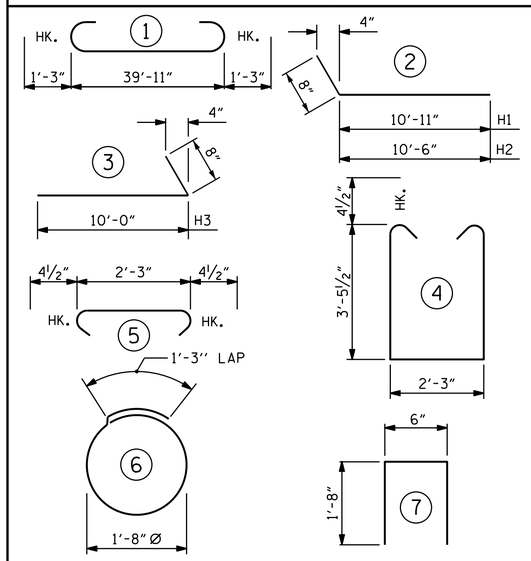

ALL BAR DIMENSIONS ARE OUT TO OUT.

END BENT No. 1	END BENT No. 2
HP 12 X 53 STEEL PILES	HP 12 X 53 STEEL PILES
NO: 7 LIN. FT.= 455	NO: 7 LIN. FT.= 455
PILE REDRIVES 2 EA.	PILE REDRIVES 2 EA.

BILL OF MATERIAL FOR ONE END BENT

BAR	NO.	SIZE	TYPE	LENGTH	WEIGHT
*B1	8	#9	1	50'-5"	1371
*B2	28	#4	STR	25'-3"	472
*B3	12	#4	STR	2'-3"	18
*D1	24	#8	STR	2'-3"	144
*H1	12	#5	2	11'-7"	145
*H2	12	#5	2	11'-2"	140
*H3	24	#5	3	10'-8"	267
*K1	12	#4	STR	3'-1"	25
*K2	12	#4	STR	25'-2"	202
*S1	62	#4	4	9'-11"	411
*S2	62	#4	5	3'-0"	124
*S3	28	#4	6	6'-6"	122
*U1	41	#4	7	3'-10"	105
*V1	61	#4	STR	7'-0"	285
*V2	82	#4	STR	5'-6"	301

* EPOXY COATED REINFORCING STEEL (FOR ONE END BENT) 4132 LBS.

CLASS AA CONCRETE BREAKDOWN (FOR ONE END BENT)

POUR #1	CAP, LOWER PART OF WINGS & COLLARS	24.0 C.Y.
POUR #2	BACKWALL & UPPER PART OF WINGS	6.5 C.Y.
TOTAL CLASS AA CONCRETE		30.5 C.Y.

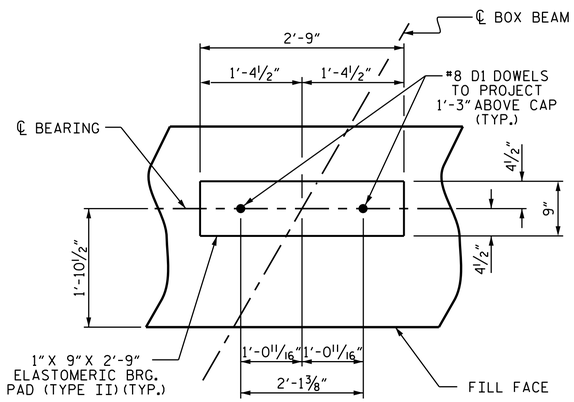

DETAIL "A"

(END BENT No. 1 SHOWN, END BENT No. 2 SIMILAR BY ROTATION)

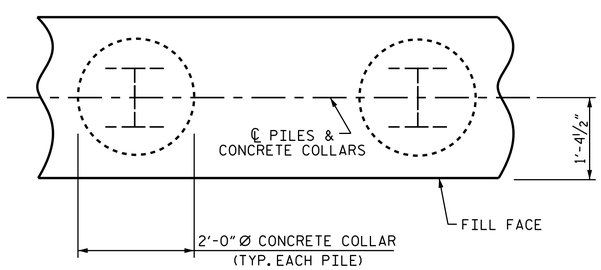

PLAN

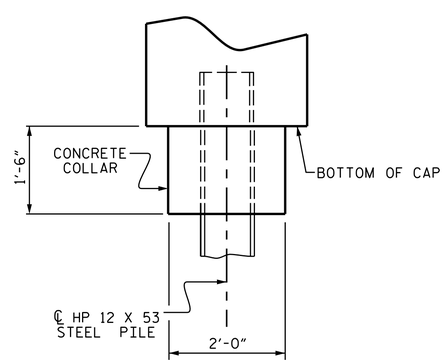

ELEVATION

CORROSION PROTECTION FOR STEEL PILES DETAIL

(END BENT No. 1 SHOWN, END BENT No. 2 SIMILAR BY ROTATION)

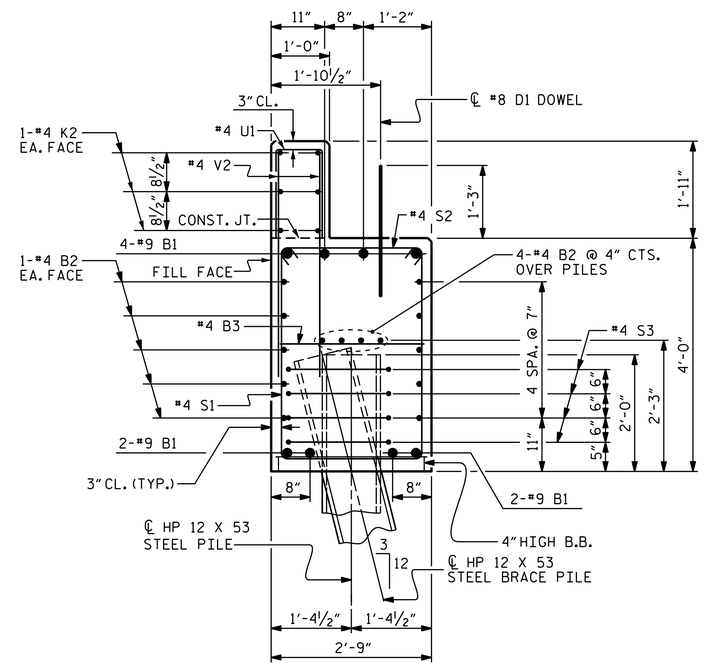

SECTION A-A

(CONCRETE COLLAR NOT SHOWN FOR CLARITY. SEE "CORROSION PROTECTION FOR STEEL PILES DETAIL.")

NORTH CAROLINA PROFESSIONAL SEAL 22005 ENGINEER A. KEITH PASCHAL

DocuSigned by: A. Keith Paschal F8B6AD6DB2FC48F...

4/24/2015

PROJECT NO. 17BP.1.R.62

WASHINGTON COUNTY

STATION: 15+69.80 -L-

SHEET 4 OF 4

STATE OF NORTH CAROLINA
DEPARTMENT OF TRANSPORTATION
RALEIGH

SUBSTRUCTURE

END BENT No. 1 & 2 DETAILS

REVISIONS								SHEET NO.
NO.	BY:	DATE:	NO.	BY:	DATE:			S-13
1			3					TOTAL SHEETS
2			4					16

ASSEMBLED BY :	L.B.LACORTE	DATE : 3-25-15
CHECKED BY :	P.N.HOLDER	DATE : 4-10-15
DESIGN ENGINEER OF RECORD: :	L.B.LACORTE	DATE : 4-10-15

24-APR-2015 13:33
S:\DPGI\Division1\17BP.1.R.62\pnholder\17BP.1.R.62_SD_BX.dgn
kpaschal

STD. NO. EB_36_60S4_33BB