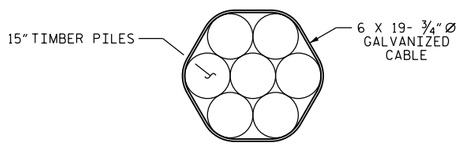


## DETAIL OF 7-PILE CLUSTER (DOLPHINS)

### PILES 15' FROM ENDS OF FENDER SYSTEM

IN THE 7-PILE CLUSTER (DOLPHINS), THE CENTER PILE SHALL BE DRIVEN VERTICALLY; AND THE SIX OUTSIDE PILES SHALL BE DRIVEN ON A 1½:12 BATTER WITH THE FINAL POSITION OF THE TOP OF THE PILE BEING AS CLOSE AS POSSIBLE TO THE TOP OF THE CENTER PILE. THE PILES SHALL BE DRAWN TOGETHER AT THE TOP AND WRAPPED WITH FIVE TURNS OF ¾"Ø WIRE ROPE AT THREE POINTS. THE WIRE ROPE SHALL BE SECURED WITH TWO CABLE CLAMPS AT EACH END AND WITH ONE ⅜"Ø X4" STAPLE PER TURN PER PILE. FASTENINGS SHALL BE GALVANIZED.

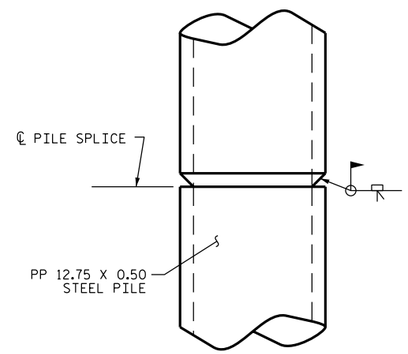


## PIPE PILE SPLICE DETAIL

| STRUCTURAL STEEL | | | | | |
|---|---|---|---|---|---|
| ITEM | UNIT | LENGTH | SIZE | NO. | TOTAL |
| STEEL PIPE PILES | LIN. FT. | 45'-0" | 12¾"Ø | 57 | 2565'-0" |
| STEEL HEADERS | LIN. FT. | 24'-0" | HP14X73 | 24 | 576'-0" |

| TREATED TIMBER | | | | | |
|---|---|---|---|---|---|
| ITEM | UNIT | LENGTH | SIZE | NO. | TOTAL |
| TIMBER PILES | LIN. FT. | 45'-0" | 15"Ø | 14 | 630'-0" |
| TIMBER WALE | LIN. FT. | 24'-0" | 12" X 12" | 24 | 576'-0" |
| TIMBER VERTICAL | LIN. FT. | 9'-0" | 12" X 6" | 96 | 864'-0" |

| STRUCTURAL HARDWARE | | | | |
|---|---|---|---|---|
| ITEM | | UNIT | NO. | TOTAL |
| 6 X 19 - ¾"Ø WIRE ROPE | (GALV) | 95 LBS/100' | 2573'-0" | 2445 LBS |
| ¾" CABLE CLAMPS | (GALV) | 160 LBS/100 | 252 | 403 LBS |
| ⅜" X4" STAPLES | (GALV) | 83 LBS/100 | 192 | 159 LBS |
| L3X3X⅜" X2" LG KEEPER | (PAINTED) | 120 LBS/100 | 342 | 410 LBS |
| ⅞"Ø X 3" BOLTS (A307) | (GALV) | 80 LBS/100 | 1712 | 1370 LBS |
| ⅞"Ø X 20" BOLTS (A307) | (GALV) | 370 LBS/100 | 576 | 2131 LBS |
| ⅞"Ø HEAVY HEX NUTS | (GALV) | 26 LBS/100 | 2288 | 595 LBS |
| ⅞"Ø STD WASHER | (GALV) | 15 LBS/100 | 2288 | 343 LBS |
| ⅞"Ø O.G. WASHERS | (GALV) | 150 LBS/100 | 576 | 864 LBS |
| PLATE A (⅝" ℙ) | (PAINTED) | 104 LBS/EA | 4 | 416 LBS |
| PLATE B (½" ℙ) | (PAINTED) | 52.2 LBS EA | 8 | 418 LBS |
| PLATE C (⅝" ℙ) | (PAINTED) | 54.3 LBS EA | 8 | 435 LBS |
| PLATE D (⅝" ℙ) | (PAINTED) | 104 LBS EA | 4 | 416 LBS |
| PLATE E (½" ℙ) | (PAINTED) | 51.4 LBS EA | 8 | 411 LBS |
| PLATE F (⅝" ℙ) | (PAINTED) | 57.4 LBS EA | 8 | 459 LBS |
| ANGLE G | (PAINTED) | 12.8 LBS EA | 114 | 1459 LBS |
| PLATE H (½" ℙ) | (PAINTED) | 21.6 LBS EA | 114 | 2465 LBS |

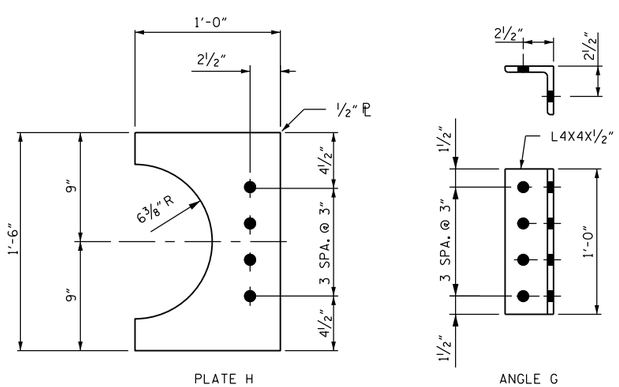


## DETAIL C

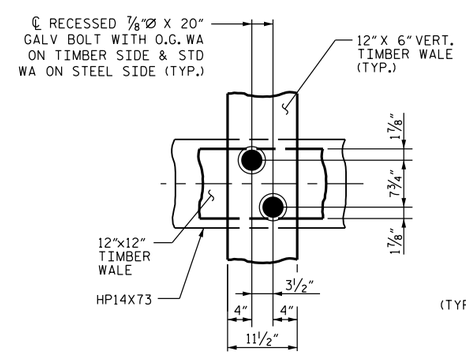


## DETAIL D

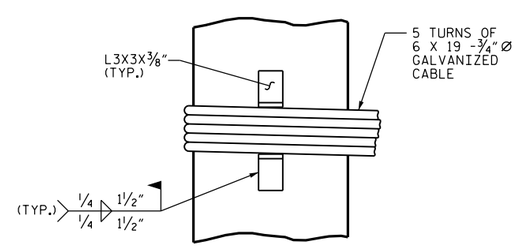


## DETAIL E

**PROJECT NO.** 41732.8

PERQUIMANS **COUNTY**

**BRIDGE:** 14

SHEET 3 OF 3

STATE OF NORTH CAROLINA
**DEPARTMENT OF TRANSPORTATION**
RALEIGH

FENDER SYSTEM

# FENDER SYSTEM DETAILS

DocuSigned by:
Paul D. Bryant
7D1BEAE39C3441A...

8/18/2015

NORTH CAROLINA PROFESSIONAL SEAL 23739 ENGINEER PAUL D. BRYANT

| REVISIONS | | | | | | SHEET NO. |
|---|---|---|---|---|---|---|
| NO. | BY: | DATE: | NO. | BY: | DATE: | F-6 |
| 1 | | | 3 | | | TOTAL SHEETS |
| 2 | | | 4 | | | 6 |

DRAWN BY : P. BRYANT DATE : 3-2015
CHECKED BY : W.M. CLARKE DATE : 3-2015

18-AUG-2015 10:21
S:\PRS\POC\Squad C\Fender_Jobs\PERQUIMANS_14_41732.8\P&R_SD_GD_Fender_Rpr.dgn
pbryant