09/08/99

# TIP PROJECT: 17BP.1.R.47

CONTRACT:

See Sheet 1-A For Index of Sheets

STATE OF NORTH CAROLINA
DIVISION OF HIGHWAYS

| STATE | STATE PROJECT REFERENCE NO. | SHEET NO. | TOTAL SHEETS |
|---|---|---|---|
| N.C. | 17BP.1.R.47 | 1 | |

| STATE PROJ. NO. | F. A. PROJ. NO. | DESCRIPTION |
|---|---|---|
| 17BP.1.R.47 | | PE, UTIL., R/W & CONST. |

# CHOWAN COUNTY

**LOCATION: BRIDGE NO. 1 OVER MIDDLETON CREEK ON SR 1100 (DRUMMOND POINT RD.)**

**TYPE OF WORK: GRADING, DRAINAGE, PAVING & STRUCTURE**

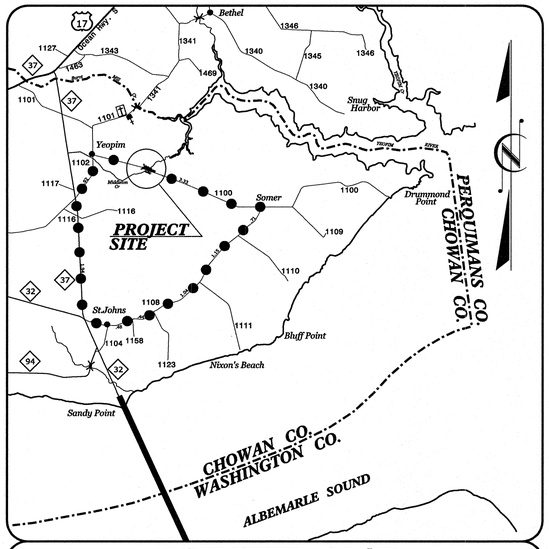


**VICINITY MAP**

**OFF-SITE DETOUR**

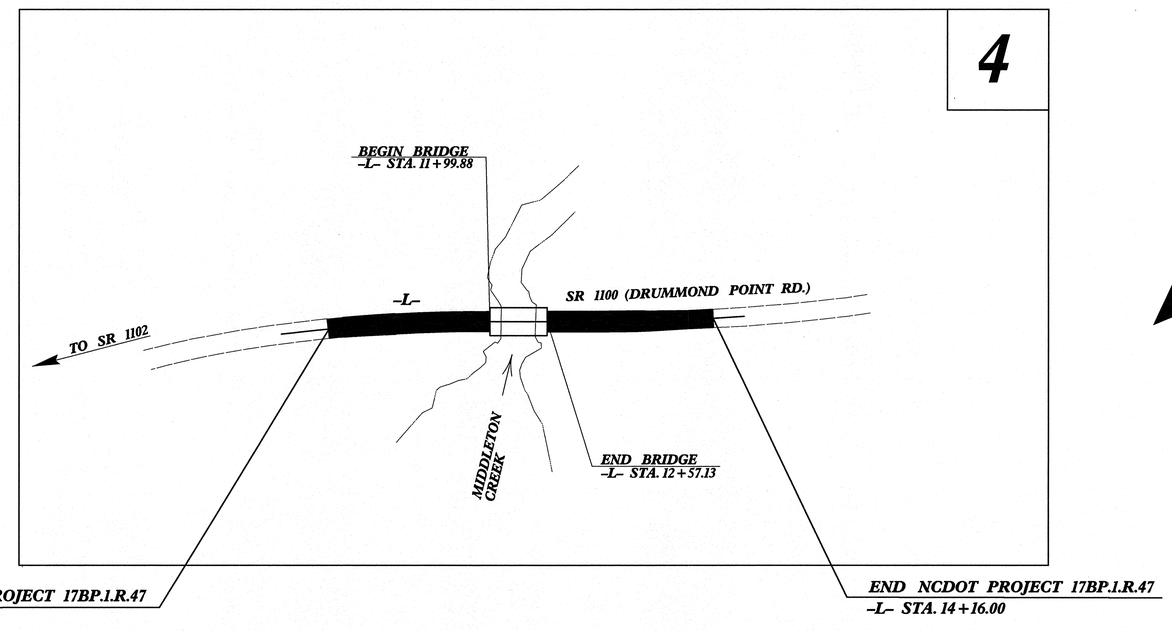


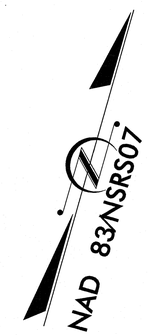


CLEARING ON THIS PROJECT SHALL BE PERFORMED TO THE LIMITS ESTABLISHED BY METHOD II.

**GRAPHIC SCALES**

50 25 0 50 100
PLANS

50 25 0 50 100
PROFILE (HORIZONTAL)

10 5 0 10 20
PROFILE (VERTICAL)

**DESIGN DATA**

ADT 2012 = 390
ADT 2032 = 590
DHV = 10 %
D = 50 %
T = 8 % *
V = 55 MPH
* TTST = 3% DUAL 5%
FUNC CLASS = LOCAL

SUBREGIONAL TIER

**PROJECT LENGTH**

LENGTH ROADWAY STATE PROJECT 17BP.1.R.47 = 0.059 MILES
LENGTH STRUCTURE STATE PROJECT 17BP.1.R.47 = 0.011 MILES
TOTAL LENGTH STATE PROJECT 17BP.1.R.47 = 0.070 MILES

WETHERILL ENGINEERING
Prepared for the North Carolina Department of Transportation in the Office of:
559 JONES FRANKLIN ROAD
SUITE 164
Raleigh, N.C. 27606
License No. F-0377
Bus: 919 851 8077
Fax: 919 851 8107

2012 STANDARD SPECIFICATIONS

RIGHT OF WAY DATE:

LETTING DATE:

EDWARD G. WETHERILL, PE
PROJECT ENGINEER

BOB A. MAY, PE
PROJECT DESIGN ENGINEER

HYDRAULICS ENGINEER
NORTH CAROLINA PROFESSIONAL SEAL 022999 ENGINEER CRAIG S. PUNYUS
SIGNATURE: 8/8/12 P.E.

ROADWAY DESIGN ENGINEER
NORTH CAROLINA PROFESSIONAL SEAL 21116 ENGINEER BOB A. MAY
SIGNATURE: 8/8/12 P.E.

DIVISION OF HIGHWAYS
STATE OF NORTH CAROLINA
STATE OF NORTH CAROLINA DEPARTMENT OF TRANSPORTATION
P.E.
STATE HIGHWAY DESIGN ENGINEER

2:18:55 PM
P:\20\BD-5101K\Roadway\Proj\BD5101K_Rdy_tsh.dgn
8/8/2012

| PROJECT REFERENCE NO. | SHEET NO. |
|---|---|
| 17BP.J.R.47 | 1-A |

ROADWAY DESIGN ENGINEER

NORTH CAROLINA PROFESSIONAL SEAL 019118 ENGINEER BOB A. MAY

8/8/12

# GENERAL NOTES

GENERAL NOTES: 2012 SPECIFICATIONS

EFFECTIVE: 01-17-12
REVISED: 08-31-11

GRADING AND SURFACING OR RESURFACING AND WIDENING:

THE GRADE LINES SHOWN DENOTE THE FINISHED ELEVATION OF THE PROPOSED SURFACING AT GRADE POINTS SHOWN ON THE TYPICAL SECTIONS. WHERE NO GRADE LINES ARE SHOWN, THE PROFILES SHOWN DENOTE THE TOP ELEVATION OF THE EXISTING PAVEMENT ALONG THE CENTER LINE OF SURVEY ON WHICH THE PROPOSED RESURFACING WILL BE PLACED. GRADE LINES MAY BE ADJUSTED BY THE ENGINEER IN ORDER TO SECURE A PROPER TIE-IN.

CLEARING:

CLEARING ON THIS PROJECT SHALL BE PERFORMED TO THE LIMITS ESTABLISHED BY METHOD II.

SUPERELEVATION:

ALL CURVES ON THIS PROJECT SHALL BE SUPERELEVATED IN ACCORDANCE WITH STD. NO. 225.04 USING THE RATE OF SUPERELEVATION AND RUNOFF SHOWN ON THE PLANS. SUPERELEVATION IS TO BE REVOLVED ABOUT THE GRADE POINTS SHOWN ON THE TYPICAL SECTIONS.

SHOULDER CONSTRUCTION:

ASPHALT, EARTH, AND CONCRETE SHOULDER CONSTRUCTION ON THE HIGH SIDE OF SUPERELEVATED CURVES SHALL BE IN ACCORDANCE WITH STD. NO. 560.01.

GUARDRAIL:

THE GUARDRAIL LOCATIONS SHOWN ON THE PLANS MAY BE ADJUSTED DURING CONSTRUCTION AS DIRECTED BY THE ENGINEER. THE CONTRACTOR SHOULD CONSULT WITH THE ENGINEER PRIOR TO ORDERING GUARDRAIL MATERIAL.

SUBSURFACE PLANS:

NO SUBSURFACE PLANS ARE AVAILABLE ON THIS PROJECT. THE CONTRACTOR SHOULD MAKE HIS OWN INVESTIGATION AS TO THE SUBSURFACE CONDITIONS.

END BENTS:

THE ENGINEER SHALL CHECK THE STRUCTURE END BENT PLANS, DETAILS, AND CROSS-SECTION PRIOR TO SETTING OF THE SLOPE STAKES FOR THE EMBANKMENT OR EXCAVATION APPROACHING A BRIDGE.

UTILITIES:

UTILITY OWNERS ON THIS PROJECT ARE CENTURYLINK AND CHOWAN COUNTY WATER DEPARTMENT. ANY RELOCATION OF EXISTING UTILITIES WILL BE ACCOMPLISHED BY OTHERS.

RIGHT-OF-WAY MARKERS:

ALL RIGHT-OF-WAY MARKERS ON THIS PROJECT SHALL BE PLACED BY OTHERS.

# LIST OF ROADWAY STANDARD DRAWINGS

EFF. 01-17-12
REV.

2012 ROADWAY ENGLISH STANDARD DRAWINGS

The following Roadway Standards as appear in "Roadway Standard Drawings" Highway Design Branch – N. C. Department of Transportation – Raleigh, N. C., Dated January, 2012 are applicable to this project and by reference hereby are considered a part of these plans:

| STD.NO. | TITLE |
|---|---|
| DIVISION 2 – EARTHWORK | |
| 200.03 | Method of Clearing – Method II |
| 225.02 | Guide for Grading Subgrade – Secondary and Local |
| 225.04 | Method of Obtaining Superelevation – Two Lane Pavement |
| DIVISION 4 – MAJOR STRUCTURES | |
| 422.11 | Reinforced Bridge Approach Fills – Sub Regional Tier |
| DIVISION 5 – SUBGRADE, BASES AND SHOULDERS | |
| 560.01 | Method of Shoulder Construction – High Side of Superelevated Curve – Method I |
| DIVISION 8 – INCIDENTALS | |
| 862.02 | Guardrail Installation |
| 862.03 | Structure Anchor Units |

# INDEX OF SHEETS


| SHEET NUMBER | SHEET |
|---|---|
| 1 | TITLE SHEET |
| 1-A | INDEX OF SHEETS, GENERAL NOTES, AND LIST OF STANDARD DRAWINGS |
| 1-B | CONVENTIONAL SYMBOLS |
| 2 | DETAIL OF MODIFIED CONCRETE FLUME |
| 3 | SUMMARY OF DRAINAGE QUANTITIES, GUARDRAIL SUMMARY, EARTHWORK SUMMARY, PAVEMENT REMOVAL SUMMARY, SHOULDER BERM GUTTER SUMMARY AND RIGHT OF WAY AREA DATA |
| 4 | PLAN & PROFILE, PAVEMENT SCHEDULE, TYPICAL SECTIONS AND MISCELLANEOUS DETAILS |
| TCP-1 | TRAFFIC CONTROL PLANS |
| EC-1 THRU EC-3 | EROSION CONTROL PLANS |
| X-1 THRU X-3 | CROSS-SECTIONS |
| S-1 THRU S-13 | STRUCTURE PLANS |

04/16/11

| PROJECT REFERENCE NO. | SHEET NO. |
|---|---|
| 17BP.JR.47 | 1-B |

***Note: Not to Scale***

***S.U.E. = Subsurface Utility Engineering***

STATE OF NORTH CAROLINA
DIVISION OF HIGHWAYS

# CONVENTIONAL PLAN SHEET SYMBOLS

## *BOUNDARIES AND PROPERTY:*

- State Line
- County Line
- Township Line
- City Line
- Reservation Line
- Property Line
- Existing Iron Pin — EIP
- Property Corner
- Property Monument — ECM
- Parcel/Sequence Number — 123
- Existing Fence Line
- Proposed Woven Wire Fence
- Proposed Chain Link Fence
- Proposed Barbed Wire Fence
- Existing Wetland Boundary — WLB
- Proposed Wetland Boundary — WLB
- Existing Endangered Animal Boundary — EAB
- Existing Endangered Plant Boundary — EPB
- Known Soil Contamination: Area or Site
- Potential Soil Contamination: Area or Site

## *BUILDINGS AND OTHER CULTURE:*

- Gas Pump Vent or U/G Tank Cap
- Sign — S
- Well — W
- Small Mine
- Foundation
- Area Outline
- Cemetery
- Building
- School
- Church
- Dam

## *HYDROLOGY:*

- Stream or Body of Water
- Hydro, Pool or Reservoir
- Jurisdictional Stream — JS
- Buffer Zone 1 — BZ 1
- Buffer Zone 2 — BZ 2
- Flow Arrow
- Disappearing Stream
- Spring
- Wetland
- Proposed Lateral, Tail, Head Ditch — FLOW
- False Sump

## *RAILROADS:*

- Standard Gauge — CSX TRANSPORTATION
- RR Signal Milepost — MILEPOST 35
- Switch — SWITCH
- RR Abandoned
- RR Dismantled

## *RIGHT OF WAY:*

- Baseline Control Point
- Existing Right of Way Marker
- Existing Right of Way Line
- Proposed Right of Way Line — RW
- Proposed Right of Way Line with Iron Pin and Cap Marker — RW
- Proposed Right of Way Line with Concrete or Granite Marker — RW
- Existing Control of Access — CA
- Proposed Control of Access — CA
- Existing Easement Line — E
- Proposed Temporary Construction Easement — E
- Proposed Temporary Drainage Easement — TDE
- Proposed Permanent Drainage Easement — PDE
- Proposed Permanent Drainage / Utility Easement — DUE
- Proposed Permanent Utility Easement — PUE
- Proposed Temporary Utility Easement — TUE
- Proposed Aerial Utility Easement — AUE
- Proposed Permanent Easement with Iron Pin and Cap Marker

## *ROADS AND RELATED FEATURES:*

- Existing Edge of Pavement
- Existing Curb
- Proposed Slope Stakes Cut — C
- Proposed Slope Stakes Fill — F
- Proposed Curb Ramp — CR
- Curb Cut Future Ramp — CCFR
- Existing Metal Guardrail
- Proposed Guardrail
- Existing Cable Guiderail
- Proposed Cable Guiderail
- Equality Symbol
- Pavement Removal

## *VEGETATION:*

- Single Tree
- Single Shrub
- Hedge
- Woods Line
- Orchard
- Vineyard — Vineyard

## *EXISTING STRUCTURES:*

MAJOR:

- Bridge, Tunnel or Box Culvert — CONC
- Bridge Wing Wall, Head Wall and End Wall — CONC WW

MINOR:

- Head and End Wall — CONC HW
- Pipe Culvert
- Footbridge
- Drainage Box: Catch Basin, DI or JB — CB
- Paved Ditch Gutter
- Storm Sewer Manhole — S
- Storm Sewer — S

## *UTILITIES:*

POWER:

- Existing Power Pole
- Proposed Power Pole
- Existing Joint Use Pole
- Proposed Joint Use Pole
- Power Manhole — P
- Power Line Tower
- Power Transformer
- U/G Power Cable Hand Hole
- H-Frame Pole
- Recorded U/G Power Line — P
- Designated U/G Power Line (S.U.E.*) — P

TELEPHONE:

- Existing Telephone Pole
- Proposed Telephone Pole
- Telephone Manhole — T
- Telephone Booth
- Telephone Pedestal — T
- Telephone Cell Tower
- U/G Telephone Cable Hand Hole — HH
- Recorded U/G Telephone Cable — T
- Designated U/G Telephone Cable (S.U.E.*) — T
- Recorded U/G Telephone Conduit — TC
- Designated U/G Telephone Conduit (S.U.E.*) — TC
- Recorded U/G Fiber Optics Cable — T FO
- Designated U/G Fiber Optics Cable (S.U.E.*) — T FO

WATER:

- Water Manhole — W
- Water Meter
- Water Valve
- Water Hydrant
- Recorded U/G Water Line — W
- Designated U/G Water Line (S.U.E.*) — W
- Above Ground Water Line — A/G Water

TV:

- TV Satellite Dish
- TV Pedestal — C
- TV Tower
- U/G TV Cable Hand Hole — HH
- Recorded U/G TV Cable — TV
- Designated U/G TV Cable (S.U.E.*) — TV
- Recorded U/G Fiber Optic Cable — TV FO
- Designated U/G Fiber Optic Cable (S.U.E.*) — TV FO

GAS:

- Gas Valve
- Gas Meter
- Recorded U/G Gas Line — G
- Designated U/G Gas Line (S.U.E.*) — G
- Above Ground Gas Line — A/G Gas

SANITARY SEWER:

- Sanitary Sewer Manhole
- Sanitary Sewer Cleanout
- U/G Sanitary Sewer Line — SS
- Above Ground Sanitary Sewer — A/G Sanitary Sewer
- Recorded SS Forced Main Line — FSS
- Designated SS Forced Main Line (S.U.E.*) — FSS

MISCELLANEOUS:

- Utility Pole
- Utility Pole with Base
- Utility Located Object
- Utility Traffic Signal Box — S
- Utility Unknown U/G Line — ?UTL
- U/G Tank; Water, Gas, Oil
- Underground Storage Tank, Approx. Loc. — UST
- A/G Tank; Water, Gas, Oil
- Geoenvironmental Boring
- U/G Test Hole (S.U.E.*)
- Abandoned According to Utility Records — AATUR
- End of Information — E.O.I.

| PROJECT REFERENCE NO. | SHEET NO. |
|---|---|
| 17BP.1.R.47 | 2 |

STATE OF
NORTH CAROLINA
DEPT. OF TRANSPORTATION
DIVISION OF HIGHWAYS
RALEIGH, N.C.

ENGLISH DETAIL DRAWING FOR
# MODIFIED CONCRETE FLUME
WITH CONCRETE OR RIP-RAP DITCH

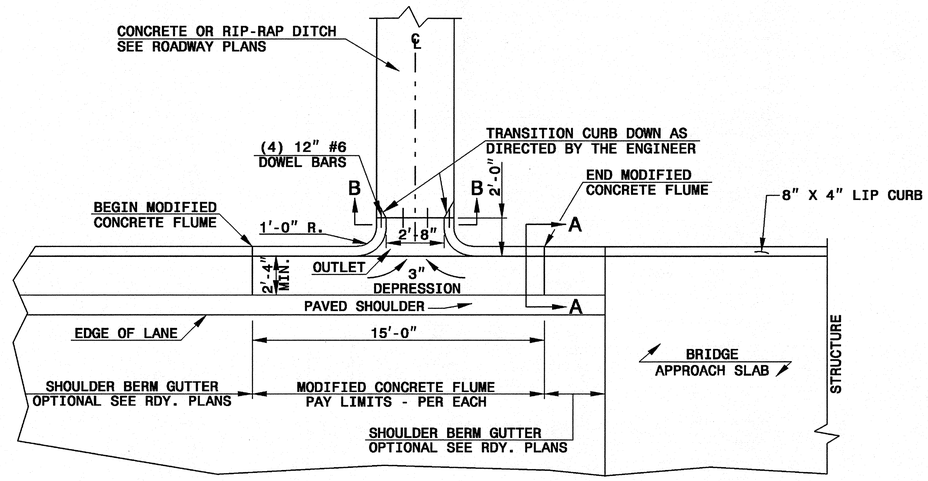


PLAN VIEW

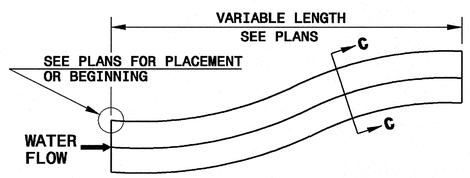


DOWNGRADE OR SAG

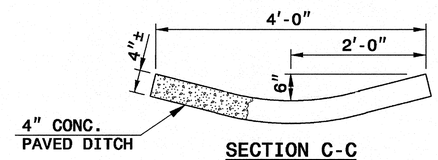


SECTION C-C

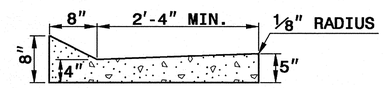


SECTION A-A

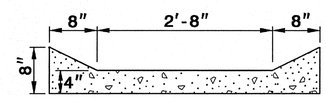


SECTION B-B

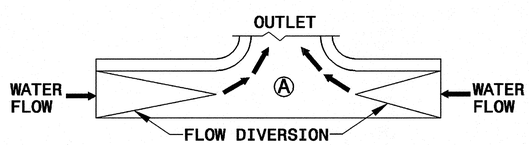


SAG

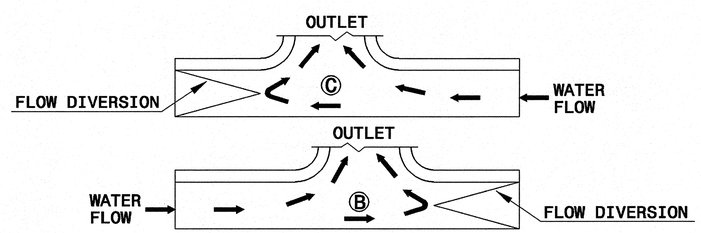


DOWN GRADE

FLOW DIVERSION EXAMPLES

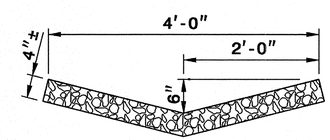


RIP-RAP LINED DITCH

NOTES:

- CONSTRUCT MODIFIED CONCRETE FLUME AND SHOULDER BERM GUTTER IN ACCORDANCE WITH THIS DETAIL.
- CONSTRUCT CONCRETE DITCH IN ACCORDANCE WITH STD. DWG. NO. 850.01.
- CONSTRUCT RIP RAP LINED DITCH IN ACCORDANCE WITH THIS DETAIL, IF CALLED FOR IN PLANS.
- CONCRETE OR RIP RAP LINED DITCH SHALL BE THE TYPE AND LENGTH SPECIFIED BY THE ROADWAY PLANS. THE DITCH SHALL TERMINATE AS SHOWN ON THE PLANS. IF NO TERMINATION IS INDICATED PLACE RIP-RAP AT THE END OF THE DITCH AS INDICATED BY STD. DWG. 876.02 FOR AN 18" PIPE. TRANSITIONS FROM THE DITCH TO TERMINATION SHALL BE AS DIRECTED BY THE ENGINEER.
- MODIFICATIONS SHALL BE AS DICTATED BY SITE CONDITIONS AND DIRECTED BY THE ENGINEER.

SHEET 1 OF 1
MODFL:MDTCH

STATE OF
NORTH CAROLINA
DEPT. OF TRANSPORTATION
DIVISION OF HIGHWAYS
RALEIGH, N.C.

ENGLISH DETAIL DRAWING FOR
MODIFIED CONCRETE FLUME
WITH CONCRETE OR RIP-RAP DITCH

SHEET 1 OF 1
MODFL:MDTCH

PROJECT SERVICES UNIT
STANDARDS AND SPECIAL DESIGN
Office 919-250-4128 FAX 919-250-4119

**SEE PLATE FOR TITLE**

ORIGINAL BY: E.E. Ward DATE: Apr. 2002
MODIFIED BY: E.E. Ward DATE: July 2004
CHECKED BY: DATE:
FILE SPEC.: w:details\stand\modifiedflume.dgn

16-MAR-2006 14:32
S:\Contracts\Special Details\erioward\usr\details\stand\modifiedflume.dgn
erioward ATT PS222293

12/06/07

| COMPUTED BY: GSP | DATE: 10/26/11 |
|---|---|
| CHECKED BY: | DATE: |

STATE OF NORTH CAROLINA
DIVISION OF HIGHWAYS

| PROJECT REFERENCE NO. | SHEET NO. |
|---|---|
| 17BP.J.R.47 | 3 |

## SUMMARY OF EARTHWORK

| STATION | STATION | UNCL. EXCAV. | EMBANK. +% | BORROW | WASTE |
|---|---|---|---|---|---|
| -L- 10+46.00 | -L- 11+99.88 | 76 | 122 | | 46 |
| | | | | | |
| | | | | | |
| SUBTOTALS: | | 76 | 122 | | 46 |
| -L- 12+57.13 | -L- 14+16.00 | 74 | 105 | | 31 |
| | | | | | |
| SUBTOTALS: | | 74 | 105 | | 31 |
| | | | | | |
| PROJECT SUBTOTALS: | | 150 | 228 | | 77 |
| LOSS DUE TO CLEARING & GRUBBING | | | | | |
| PROJECT TOTALS: | | 150 | 228 | | 77 |
| | | | | | |
| 5% TO REPLACE TOPSOIL ON BORROW PIT | | | | | 4 |
| GRAND TOTALS: | | 150 | 228 | | 81 |
| | | | | | |
| SAY: | | 175 | | | 100 |

Earthwork quantities are calculated by the Roadway Design Unit.

Note: Approximate quantities only. Unclassified Excavation, Borrow Excavation, Shoulder Borrow, Fine Grading, Clearing and Grubbing, Breaking of Existing Pavement, and Removal of Existing Pavement will be paid for at the contract lump sum price for "Grading."

## PAVEMENT REMOVAL SUMMARY

| SURVEY LINE | STATION | STATION | LOCATION LT/RT/CL | $YD^2$ |
|---|---|---|---|---|
| | | | | |
| -L- | 10+71.00 | 12+11.22 | CL | 291 |
| -L- | 12+45.70 | 13+91.00 | CL | 285 |
| | | | | |
| | | | | |
| | | | TOTAL: | 576 |
| | | | | |
| | | | SAY: | 600 |

## RIGHT OF WAY AREA DATA

| PARCEL NO. | PROPERTY OWNERS NAMES | TOTAL ACREAGE | AREA TAKEN | AREA REMAINING RT. | AREA REMAINING LT. | CONST. EASE. | PERM. DRAIN. EASE. | TEMP. DRAIN. EASE. |
|---|---|---|---|---|---|---|---|---|
| 1 | MELVIN D. JOHNSON, SR. | | 1781.48 SF | | | | | |
| 2 | MARGARET ANN CAMPEN SHAVER | | 1682.66 SF | | | | | |
| 3 | BLACK SWAN INVESTMENTS LLC | | 3936.48 SF | | | | | |
| | | | | | | | | |
| | | | | | | | | |
| | | | | | | | | |
| | | | | | | | | |
| | | | | | | | | |
| | | | | | | | | |
| | | | | | | | | |
| | | | | | | | | |

NOTE: Invert Elevations are for Bid Purposes only and shall not be used for project construction stakeout.
See "Standard Specifications For Roads and Structures, Section 300–5".

## SUB–REGIONAL & REGIONAL LIST OF PIPES, ENDWALLS, ETC. (FOR PIPES 48" & UNDER)

| STATION / SIZE / THICKNESS OR GAUGE | LOCATION (LT,RT, OR CL) | STRUCTURE NO. FROM | STRUCTURE NO. TO | TOP ELEVATION | INVERT ELEVATION | INVERT ELEVATION | SLOPE CRITICAL | DRAINAGE PIPE (RCP, CSP, CAAP, HDPE, or PVC) 12" | 15" | 18" | 24" | 30" | 36" | 42" | 48" | DO NOT USE RCP | DO NOT USE CSP | DO NOT USE CAAP | DO NOT USE HDPE |
|---|---|---|---|---|---|---|---|---|---|---|---|---|---|---|---|---|---|---|---|
| -L- 11+81 | LT. | 1 | | | | | | | | | | | | | | | | | |
| -L- 11+81 | RT. | 2 | | | | | | | | | | | | | | | | | |
| -L- 12+77 | LT. | 3 | | | | | | | | | | | | | | | | | |
| -L- 12+77 | RT. | 4 | | | | | | | | | | | | | | | | | |
| | | | | | | | | | | | | | | | | | | | |
| | | | | | | | | | | | | | | | | | | | |
| | | | | | | | | | | | | | | | | | | | |

| STATION | C.S. PIPE 12" .064 | 15" .064 | 18" .064 | 24" .064 | 36" .079 | 42" .109 | 48" .109 | R.C. PIPE (CLASS III) 15" | 18" | 24" | 30" | 36" | 42" | 48" | R.C. PIPE (CLASS IV) 12" | 15" | 18" | 24" | 30" | 36" | 42" | 48" |
|---|---|---|---|---|---|---|---|---|---|---|---|---|---|---|---|---|---|---|---|---|---|---|
| -L- 11+81 | | | | | | | | | | | | | | | | | | | | | | |
| -L- 11+81 | | | | | | | | | | | | | | | | | | | | | | |
| -L- 12+77 | | | | | | | | | | | | | | | | | | | | | | |
| -L- 12+77 | | | | | | | | | | | | | | | | | | | | | | |
| | | | | | | | | | | | | | | | | | | | | | | |
| | | | | | | | | | | | | | | | | | | | | | | |
| | | | | | | | | | | | | | | | | | | | | | | |

| STATION | ** R. C. PIPE (CLASS V) | ** R. C. PIPE CULVERTS, CONTRACTOR DESIGN PIPE | ** R. C. PIPE CULVERTS, CONTRACTOR DESIGN PIPE | 15" SIDE DRAIN PIPE | 18" SIDE DRAIN PIPE | ENDWALLS STD. 838.01, STD. 838.11 OR STD. 838.80 (UNLESS NOTED OTHERWISE) CU. YDS. R.C.P. | C.S.P. | QUANTITIES FOR DRAINAGE STRUCTURES PER EACH (0' THRU 5.0') | * TOTAL L.F. FOR PAY QUANTITY SHALL BE COL. 'A' + (1.3 X COL.'B') LIN. *FT. A 5.0' THRU 10.0' | B 10.0' AND ABOVE | C.B. STD. 840.01 OR STD. 840.02 | FRAME, GRATES AND HOOD STANDARD 840.03 TYPE OF GRATE E | F | G | | CONCRETE TRANSITIONAL SECTION CATCH BASIN | DROP INLET | G.D.I. TYPE "B" STD. 840.18 OR 840.27 | G.D.I. (N.S.) FRAME WITH TWO GRATES STD. 840.24 | MODIFIED CONCRETE FLUME | G.D.I. (N.S.) FRAME WITH TWO GRATES STD. 840.29 | M.H. FRAME & COVER STD. 840.54 | T.B.J.B. STD. 840.34 | CORR. STEEL ELBOWS NO. & SIZE | CONC. COLLARS CL. "B" C.Y. STD 840.72 | CONC. & BRICK PIPE PLUG, C.Y. STD. 840.71 | PIPE REMOVAL LIN.FT. | REMARKS |
|---|---|---|---|---|---|---|---|---|---|---|---|---|---|---|---|---|---|---|---|---|---|---|---|---|---|---|---|---|
| -L- 11+81 | | | | | | | | | | | | | | | | | | | | 1 | | | | | | | | SEE SHEET 2 FOR DETAIL |
| -L- 11+81 | | | | | | | | | | | | | | | | | | | | 1 | | | | | | | | SEE SHEET 2 FOR DETAIL |
| -L- 12+77 | | | | | | | | | | | | | | | | | | | | 1 | | | | | | | | SEE SHEET 2 FOR DETAIL |
| -L- 12+77 | | | | | | | | | | | | | | | | | | | | 1 | | | | | | | | SEE SHEET 2 FOR DETAIL |
| | | | | | | | | | | | | | | | | | | | | | | | | | | | | |
| | | | | | | | | | | | | | | | | | | | | 4 | | | | | | | | |
| | | | | | | | | | | | | | | | | | | | | | | | | | | | | |

ABBREVIATIONS

| | |
|---|---|
| C.B. | CATCH BASIN |
| N.D.I. | NARROW DROP INLET |
| D.I. | DROP INLET |
| G.D.I. | GRATED DROP INLET |
| G.D.I. (N.S.) | GRATED DROP INLET (NARROW SLOT) |
| J.B. | JUNCTION BOX |
| M.H. | MANHOLE |
| T.B.D.I. | TRAFFIC BEARING DROP INLET |
| T.B.J.B. | TRAFFIC BEARING JUNCTION BOX |

"N" = DISTANCE FROM EDGE OF LANE TO FACE OF GUARDRAIL.
TOTAL SHOULDER WIDTH = DISTANCE FROM EDGE OF TRAVEL LANE TO SHOULDER BREAK POINT.
FLARE LENGTH = DISTANCE FROM LAST SECTION OF PARALLEL GUARDRAIL TO END OF GUARDRAIL.
W = TOTAL WIDTH OF FLARE FROM BEGINNING OF TAPER TO END OF GUARDRAIL.
G = GATING IMPACT ATTENUATOR TYPE 350
NG = NON–GATING IMPACT ATTENUATOR TYPE 350

## GUARDRAIL SUMMARY

| SURVEY LINE | BEG. STA. | END STA. | LOCATION | LENGTH STRAIGHT | SHOP CURVED | DOUBLE FACED | WARRANT POINT APPROACH END | TRAILING END | "N" DIST. FROM E.O.L. | TOTAL SHOUL. WIDTH | FLARE LENGTH APPROACH END | TRAILING END | W APPROACH END | TRAILING END | ANCHORS XI MOD | TYPE III | GRAU 350 | M–350 | B–77 | CAT–1 | VI MOD | BIC | AT–1 | IMPACT ATTENUATOR TYPE 350 EA | G | NG | SINGLE FACED GUARDRAIL | REMOVE EXISTING GUARDRAIL | REMOVE AND STOCKPILE EXISTING GUARDRAIL | REMARKS |
|---|---|---|---|---|---|---|---|---|---|---|---|---|---|---|---|---|---|---|---|---|---|---|---|---|---|---|---|---|---|---|
| -L- | 11+24.88 | 11+99.88 | LT. | 75.00' | | | | 11+99.88 | 3'-0" | 5'-0" | | 50'-0" | | 1'-0" | | 1 | 1 | | | | | | | | | | | | | |
| -L- | 11+24.88 | 11+99.88 | RT. | 75.00' | | | 11+99.88 | | 3'-0" | 5'-0" | 50'-0" | | 1'-0" | | | 1 | 1 | | | | | | | | | | | | | |
| -L- | 12+57.13 | 13+32.13 | LT. | 75.00' | | | 12+57.13 | | 3'-0" | 5'-0" | 50'-0" | | 1'-0" | | | 1 | 1 | | | | | | | | | | | | | |
| -L- | 12+57.13 | 13+32.13 | RT. | 75.00' | | | | 12+57.13 | 3'-0" | 5'-0" | | 50'-0" | | 1'-0" | | 1 | 1 | | | | | | | | | | | | | |
| | | | PROJECT SUBTOTAL | 300'-0" | | | | | | | | | | | | 4 | 4 | | | | | | | | | | | | | |
| | | LESS ANCHOR DEDUCTIONS | | (-)275'-0" | | | | | | | | | | | | | | | | | | | | | | | | | | |
| | | | PROJECT TOTAL | 25'-0" | | | | | | | | | | | | GUARDRAIL ANCHOR DEDUCTIONS | | | | | | | | | | | | | | |
| | | | | | | | | | | | | | | | | TYPE III = 4 @ 18.75 = 75'-0" | | | | | | | | | | | | | | |
| | | | SAY | 50'-0" | | | | | | | | | | | | GRAU 350 = 4 @ 50'-0" = 200'-0" | | | | | | | | | | | | | | |
| | | | | | | ADDITIONAL GUARDRAIL POSTS = 5 EACH | | | | | | | | | | TOTAL DEDUCTIONS = 275'-0" | | | | | | | | | | | | | | |

2:19:58 PM
P:\2011\BD-5101K\Roadway\Proj\BD5101K_Rdy_sum.dgn
8/8/2012

| PROJECT REFERENCE NO. | SHEET NO. |
|---|---|
| 17BP.1.R.47 | 4 |
| R/W SHEET NO. | |

ROADWAY DESIGN ENGINEER: NORTH CAROLINA PROFESSIONAL SEAL 21716 ENGINEER BOB A. MAY 8/8/12

HYDRAULICS ENGINEER: NORTH CAROLINA PROFESSIONAL SEAL 022939 ENGINEER GREG S. PURVIS 8/8/12

WETHERILL ENGINEERING
559 Jones Franklin Rd. Suite 164
Raleigh, N.C. 27606
Liscense No. F-0377
Bus: 919 851 8077
Fax: 919 851 8107
TRANSPORTATION PLANNING/DESIGN - BRIDGE/STRUCTURE DESIGN
CIVIL/SITE DESIGN - GIS/GPS - CONSTRUCTION OBSERVATION

## DATUM DESCRIPTION

THE LOCALIZED COORDINATE SYSTEM DEVELOPED FOR THIS PROJECT IS BASED ON THE STATE PLANE COORDINATES ESTABLISHED BY JOYNER KEENY, PLLC FOR MONUMENT "BL-2"
WITH NAD 83/2007 STATE PLANE GRID COORDINATES OF
NORTHING: 854182.077(ft) EASTING: 2737612.523(ft)
ELEVATION: 3.03(ft)
THE AVERAGE COMBINED GRID FACTOR USED ON THIS PROJECT (GROUND TO GRID) IS: 0.999980407
THE N.C. LAMBERT GRID BEARING AND LOCALIZED HORIZONTAL GROUND DISTANCE FROM "BL2" TO -L- STATION 10+00.00 IS
N 64°1'8" W 254.47'
ALL LINEAR DIMENSIONS ARE LOCALIZED HORIZONTAL DISTANCES
VERTICAL DATUM USED IS NAVD 88

BL-1 - N=854350.06, E=2737175.54 ELEV.=3.61
BL-2 - N=854182.08, E=2737612.52, ELEV.=3.03
BL-3 - N=853977.37, E=2737952.57, ELEV.=5.15

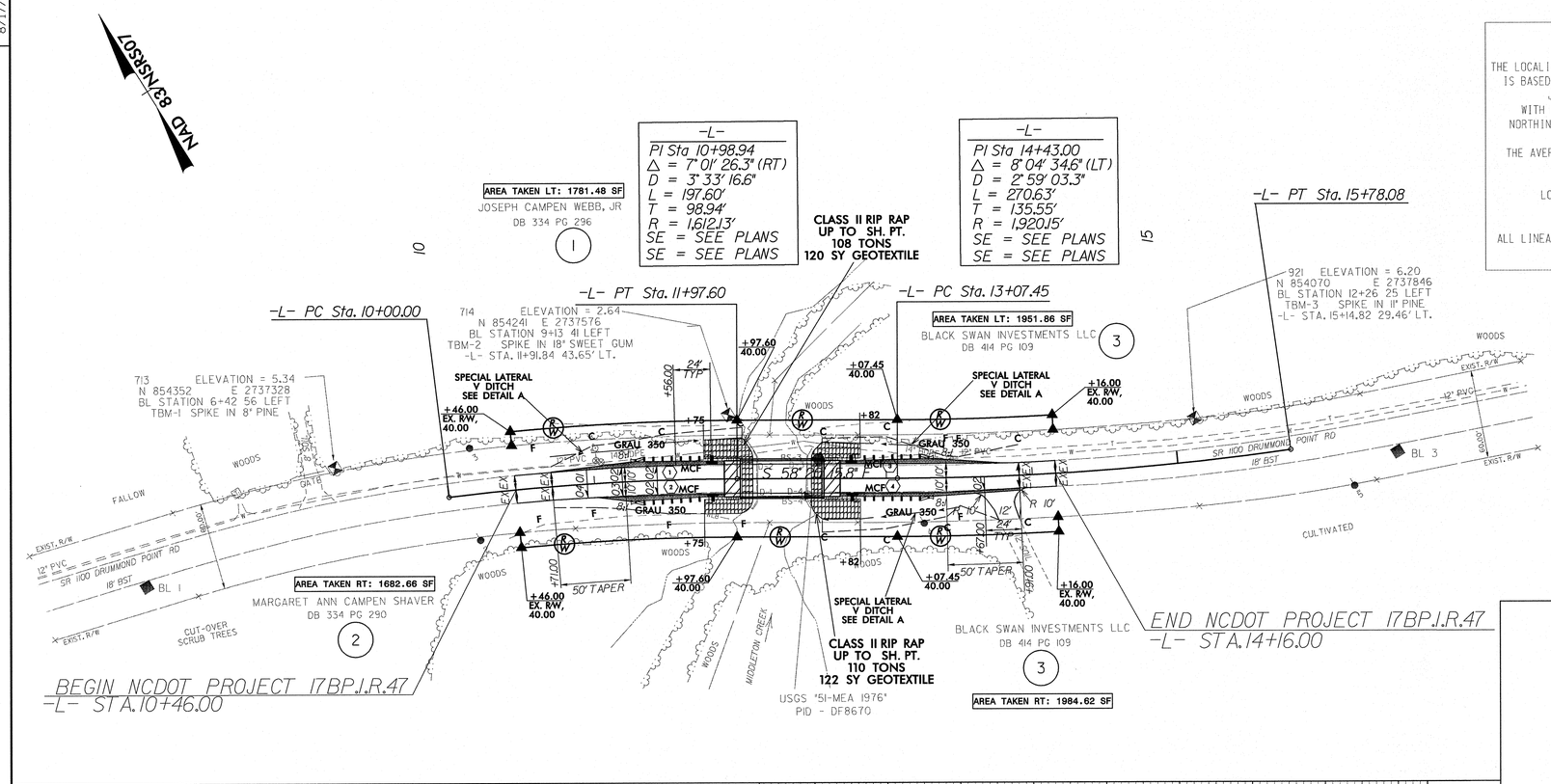


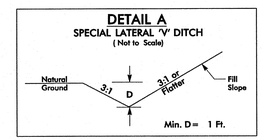


FROM STA. 10+71 TO STA. 12+01 LT
FROM STA. 12+56 TO STA. 13+41 LT
FROM STA. 12+56 TO STA. 13+50 RT

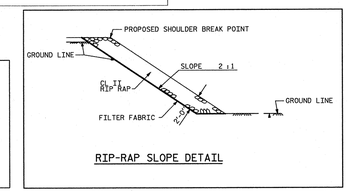


RIP-RAP SLOPE DETAIL

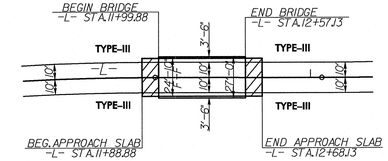


SKETCH SHOWING BRIDGE/PAVEMENT RELATIONSHIP

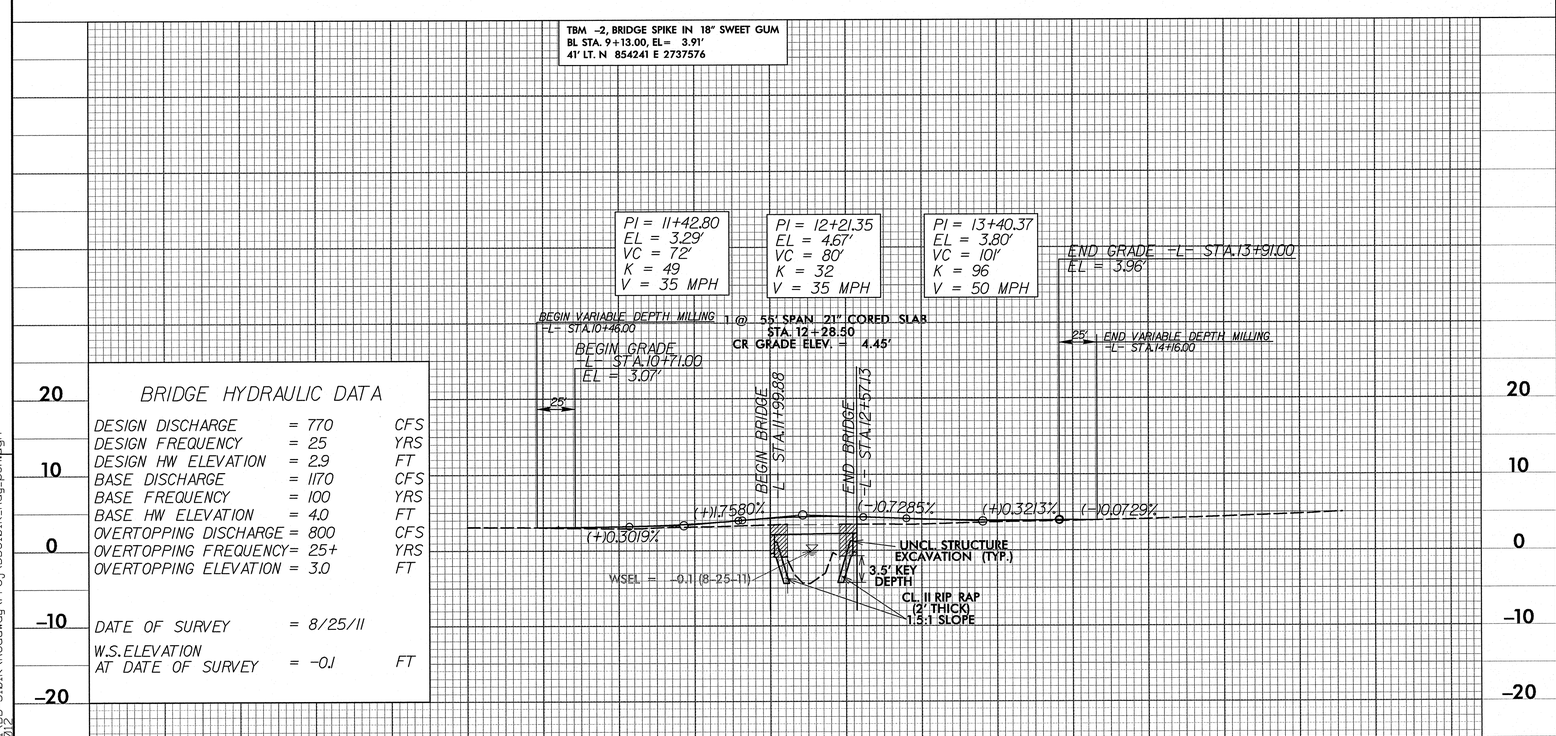


## BRIDGE HYDRAULIC DATA

| | | |
|---|---|---|
| DESIGN DISCHARGE | = 770 | CFS |
| DESIGN FREQUENCY | = 25 | YRS |
| DESIGN HW ELEVATION | = 2.9 | FT |
| BASE DISCHARGE | = 1170 | CFS |
| BASE FREQUENCY | = 100 | YRS |
| BASE HW ELEVATION | = 4.0 | FT |
| OVERTOPPING DISCHARGE | = 800 | CFS |
| OVERTOPPING FREQUENCY | = 25+ | YRS |
| OVERTOPPING ELEVATION | = 3.0 | FT |
| DATE OF SURVEY | = 8/25/11 | |
| W.S. ELEVATION AT DATE OF SURVEY | = -0.1 | FT |

PERFORM VARIABLE DEPTH MILLING AT THE FOLLOWING LOCATIONS:
-L- STA. 10+46.00 TO -L- STA. 10+71.00
-L- STA. 13+91.00 TO -L- STA. 14+16.00

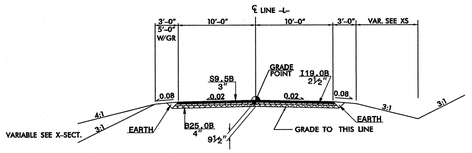


## TYPICAL SECTION NO. 1

USE TYPICAL SECTION NO. 1 AS FOLLOWS:
-L- STA. 10+71.00 TO -L- STA. 11+99.88 (BEGIN BRIDGE)
-L- STA. 12+57.13 (END BRIDGE) TO -L- STA. 13+91.00

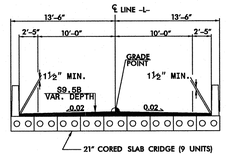


## TYPICAL SECTION NO. 2

USE TYPICAL SECTION NO. 2 AS FOLLOWS:
-L- STA. 11+99.88 (BEGIN BRIDGE) TO -L- STA. 12+57.13 (END BRIDGE)

REVISIONS

8/17/99

2:20:43 PM
R:\2011\BD-5101K\Roadway\Proj\BD5101K_Rdy_psh.dgn
8/8/2012

| PROJECT REFERENCE NO. | SHEET NO. |
|---|---|
| 17BP.I.R.47 | TCP-1 |
| R/W SHEET NO. | |

NORTH CAROLINA PROFESSIONAL SEAL 21116 ENGINEER BOB A MAY

8/8/12


WETHERILL ENGINEERING
559 Jones Franklin Rd. Suite 164
Raleigh, N.C. 27606
Liscense No. F-0377
Bus: 919 851 8077
Fax: 919 851 8107

TRANSPORTATION PLANNING/DESIGN - BRIDGE/STRUCTURE DESIGN
CIVIL/SITE DESIGN - GIS/GPS - CONSTRUCTION OBSERVATION


# TRAFFIC CONTROL FOR TEMPORARY ROAD CLOSURE

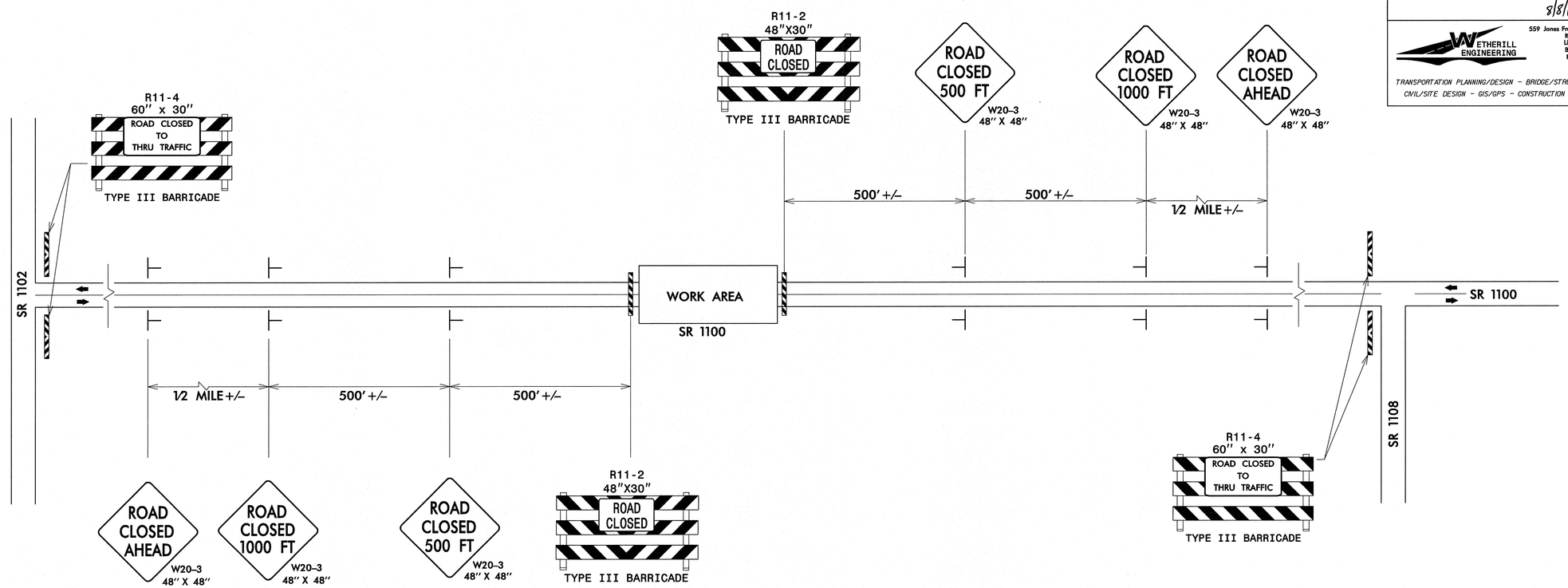


## LEGEND

DIRECTION OF TRAFFIC FLOW

### TRAFFIC CONTROL DEVICES

BARRICADE (TYPE III)

### TEMPORARY SIGNING

STATIONARY SIGN

## GENERAL NOTES

1. INSTALLATION OF TEMPORARY ROUTE MARKERS, DESTINATION SIGNS, AND ANY NECESSARY MODIFICATIONS TO EXISTING OR PROPOSED REGULATORY OR WARNING SIGNS WILL BE MADE BY OTHERS (STATE OR CITY FORCES) UNLESS OTHERWISE DESIGNATED IN PLANS. PROVIDE A MINIMUM 21 CALENDAR DAY NOTICE TO STATE FORCES BEFORE A ROADWAY IS CLOSED TO TRAFFIC SUCH THAT THE NECESSARY PROVISIONS CAN BE MADE TO INFORM LOCAL EMERGENCY AND LAW ENFORCEMENT PERSONNEL, SCHOOLS OR ANY OTHER PARTIES AFFECTED BY THE ROAD CLOSURE.
2. DO NOT INSTALL ADVANCE WARNING SIGNS MORE THAN 3 DAYS PRIOR TO BEGINNING OF WORK.
3. INSTALL SIGNS BEFORE THE BARRICADES WHEN CLOSING THE ROADWAY TO TRAFFIC. REMOVE BARRICADES BEFORE SIGNS WHEN OPENING THE ROADWAY TO TRAFFIC. INSTALL/REMOVE SIGNS AND BARRICADES WITHIN THE SAME CALENDAR DAY.
4. POSITION WING BARRICADES ON THE SHOULDERS AND SLOPE THE STRIPES DOWNWARD IN THE DIRECTION TOWARD WHICH TRAFFIC MUST TURN IN DETOURING.
5. USE PORTABLE SIGNS IF ROAD CLOSURE IS TO BE IMPLEMENTED FOR LESS THAN ONE DAY OR FOR EMERGENCIES.

REVISIONS

8/17/99

8/8/2012
2:12:36 PM
I:\2011\BD-5101K\Traffic\TrafficControl\TCP\BD5101K_TC_ash.dgn

# EROSION CONTROL PLANS

| PROJECT REFERENCE NO. | SHEET NO. |
|---|---|
| 17BP.I.R.47 | EC-1/CONST.4 |
| R/W SHEET NO. | |

NORTH CAROLINA PROFESSIONAL SEAL 023993 ENGINEER MAX S. PRICE

2/01/12

**Level III-A EC Certified by:**
**Max Price, PE**
**Certification Number: 3133**


WETHERILL ENGINEERING
559 Jones Franklin Rd. Suite 164
Raleigh, N.C. 27606
License No. F-0377
Bus: 919 851 8077
Fax: 919 851 8107

TRANSPORTATION PLANNING/DESIGN - BRIDGE/STRUCTURE DESIGN
CIVIL/SITE DESIGN - GIS/GPS - CONSTRUCTION OBSERVATION


| Std. # | Description | Symbol |
|---|---|---|
| 1605.01 | Temporary Silt Fence | |
| 1606.01 | Special Sediment Control Fence | |
| 1632.03 | Rock Inlet Sediment Trap Type C | |
| 1633.01 | Temporary Rock Silt Check Type A | |

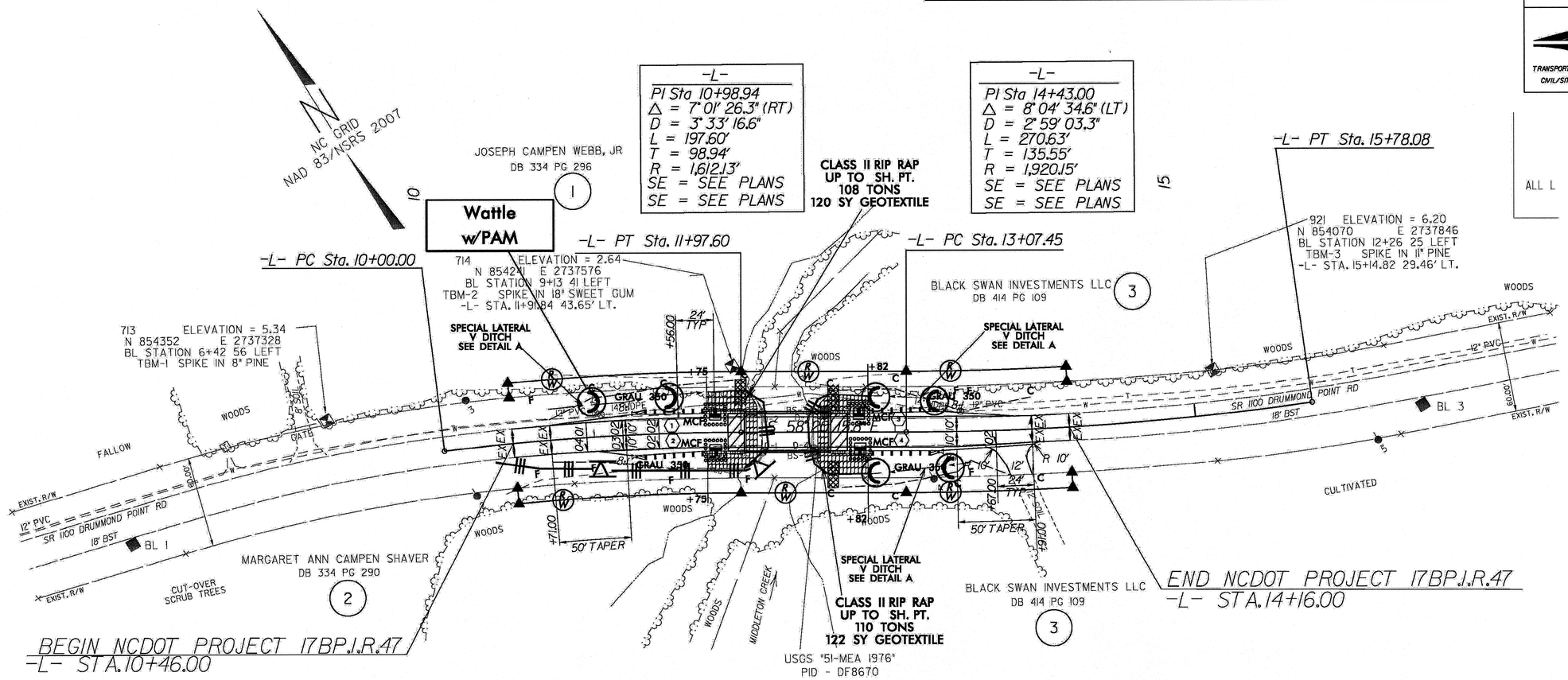


ALL L

CONSTRUCTION SEQUENCE

1. INSTALL SILT FENCE AND SPECIAL SEDIMENT CONTROL FENCE. SILT FENCE SHALL BE INSTALLED UP TO THE EXISTING BRIDGE ABUTMENTS TO PREVENT SEDIMENT-LADEN RUNOFF FROM LEAVING THE CONSTRUCTION SITE. SILT FENCE SHALL BE INSTALLED AT THE PERIMETER OF DISTURBED AREAS.

2. PROCEED WITH CONSTRUCTION OF THE NEW BRIDGE. ADDITIONAL GRAVEL STABILIZATION OR SILT FENCE MAY BE REQUIRED BEHIND THE OLD ABUTMENTS WHEN THE OLD BRIDGE IS REMOVED AND BEFORE THE NEW BRIDGE IS INSTALLED.

3. MAINTENANCE INSPECTIONS SHALL BE PERFORMED WEEKLY AND AFTER PERIODS OF RAINFALL. REPAIRS SHALL BE MADE IMMEDIATELY.

4. ACCESS AND MOBILIZATION: STABILIZE BARE AREAS IMMEDIATELY WITH TEMPORARY VEGETATION AND/OR GRAVEL AS CONSTRUCTION TAKES PLACE.

5. ONCE THE SITE IS STABILIZED, REMOVE ALL EROSION CONTROL DEVICES.

**Place Matting for Erosion Control on Slope as Work Allows.**

THESE EROSION AND SEDIMENT CONTROL PLANS COMPLY WITH THE REGULATIONS SET FORTH BY THE NCG-010000 GENERAL CONSTRUCTION PERMIT EFFECTIVE AUGUST 3, 2011 ISSUED BY THE NORTH CAROLINA DEPARTMENT OF ENVIRONMENT AND NATURAL RESOURCES DIVISION OF WATER QUALITY

**Roadway Standard Drawings**

The following roadway english standards as appear in "Roadway Standard Drawings"- Roadway Design Unit - N. C. Department of Transportation - Raleigh, N. C., dated January 2012 and the latest revison thereto are applicable to this project and by reference hereby are considered a part of these plans.

| | | | |
|---|---|---|---|
| 1605.01 | Temporary Silt Fence | 1631.01 | Matting Installation |
| 1606.01 | Special Sediment Control Fence | 1632.03 | Rock Inlet Sediment Trap Type C |
| 1607.01 | Gravel Construction Entrance | 1633.01 | Temporary Rock Silt Check Type A |

**ROADSIDE ENVIRONMENTAL UNIT**
**DEPARTMENT OF TRANSPORTATION**
**DIVISION OF HIGHWAYS**
RALEIGH, N.C.

**2012 STANDARD SPECIFICATIONS**

NOTES: ANY DEVIATION FROM PLANS WILL REQUIRE PRIOR APPROVAL BY ENGINEER.

ADDITIONAL EROSION CONTROL DEVICES MAY NEED TO BE INSTALLED AS DIRECTED BY THE ENGINEER.

REVISIONS

8/17/99

2/01/2012 PM
B-5101K\B-5101K\Hyd-outlets\B-5101K_ec_psh.dgn

| PROJECT REFERENCE NO. | SHEET NO. |
|---|---|
| 17BP.J.R.47 | EC-2 |

DIVISION OF HIGHWAYS
STATE OF NORTH CAROLINA

# SOIL STABILIZATION TIMEFRAMES

| SITE DESCRIPTION | STABILIZATION TIME | TIMEFRAME EXCEPTIONS |
|---|---|---|
| PERIMETER DIKES, SWALES, DITCHES AND SLOPES | 7 DAYS | NONE |
| HIGH QUALITY WATER (HQW) ZONES | 7 DAYS | NONE |
| SLOPES STEEPER THAN 3:1 | 7 DAYS | IF SLOPES ARE 10' OR LESS IN LENGTH AND ARE NOT STEEPER THAN 2:1, 14 DAYS ARE ALLOWED. |
| SLOPES 3:1 OR FLATTER | 14 DAYS | 7 DAYS FOR SLOPES GREATER THAN 50' IN LENGTH. |
| ALL OTHER AREAS WITH SLOPES FLATTER THAN 4:1 | 14 DAYS | NONE, EXCEPT FOR PERIMETERS AND HQW ZONES. |

| PROJECT REFERENCE NO. | SHEET NO. |
|---|---|
| 17BPJ.R.47 | EC-3 |
| R/W SHEET NO. | |

# WATTLE WITH POLYACRYLAMIDE (PAM) DETAIL

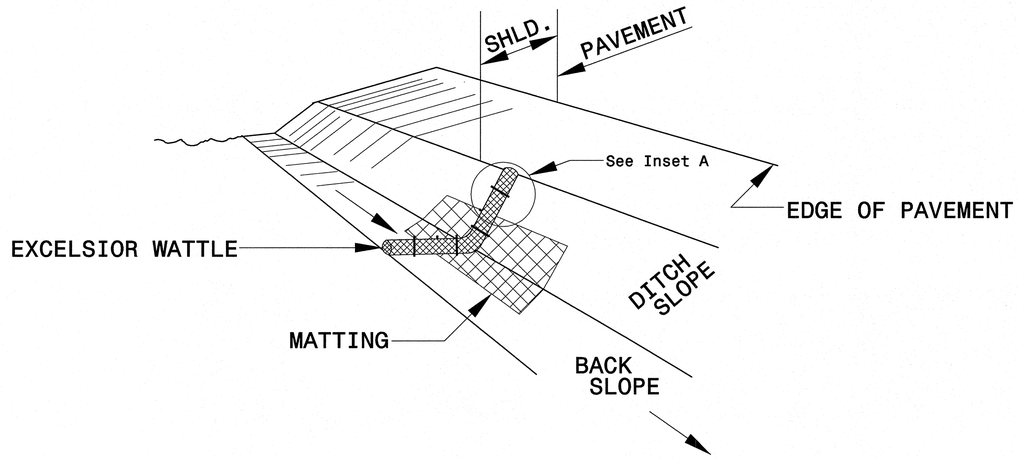


**ISOMETRIC VIEW**

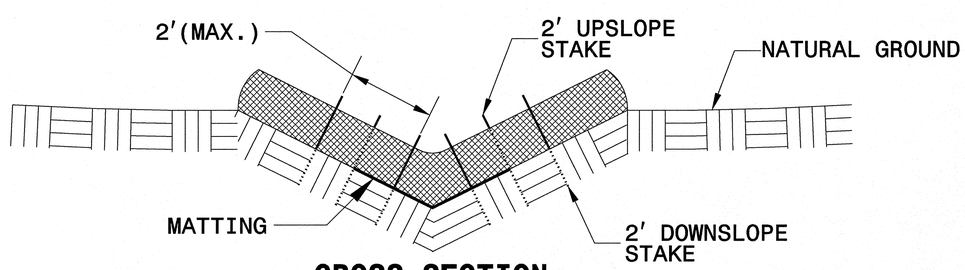


**CROSS SECTION VEE DITCH**

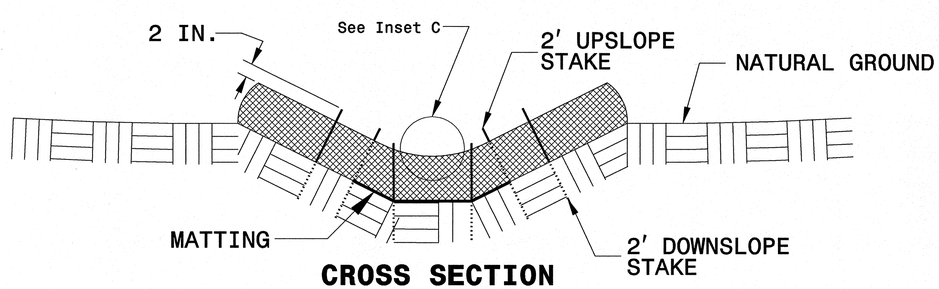


**CROSS SECTION TRAPEZOIDAL DITCH**

NOTES:

USE MINIMUM 12 IN. DIAMETER EXCELSIOR WATTLE.

USE 2 FT. WOODEN STAKES WITH A 2 IN. BY 2 IN. NOMINAL CROSS SECTION.

ONLY INSTALL WATTLE(S) TO A HEIGHT IN DITCH SO FLOW WILL NOT WASH AROUND WATTLE AND SCOUR DITCH SLOPES AND AS DIRECTED.

INSTALL A MINIMUM OF 2 UPSLOPE STAKES AND 4 DOWNSLOPE STAKES AT AN ANGLE TO WEDGE WATTLE TO BOTTOM OF DITCH.

PROVIDE STAPLES MADE OF 0.125 IN. DIAMETER STEEL WIRE FORMED INTO A U SHAPE NOT LESS THAN 12" IN LENGTH.

INSTALL STAPLES APPROXIMATELY EVERY 1 LINEAR FOOT ON BOTH SIDES OF WATTLE AND AT EACH END TO SECURE IT TO THE SOIL.

INSTALL MATTING IN ACCORDANCE WITH SECTION 1631 OF THE STANDARD SPECIFICATIONS.

PRIOR TO POLYACRYLAMIDE (PAM) APPLICATION, OBTAIN A SOIL SAMPLE FROM PROJECT LOCATION, AND FROM OFFSITE MATERIAL, AND ANALYZE FOR APPROPRIATE PAM FLOCCULANT TO BE APPLIED TO EACH WATTLE.

INITIALLY APPLY 2 OUNCES OF ANIONIC OR NEUTRALLY CHARGED PAM OVER WATTLE WHERE WATER WILL FLOW AND 1 OUNCE OF PAM ON MATTING ON EACH SIDE OF WATTLE. REAPPLY PAM AFTER EVERY RAINFALL EVENT THAT IS EQUAL TO OR EXCEEDS 0.50 IN.

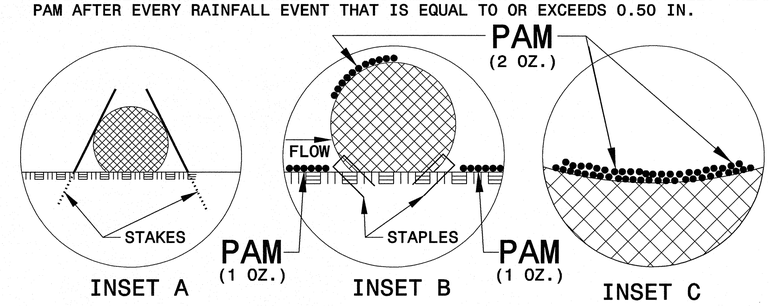


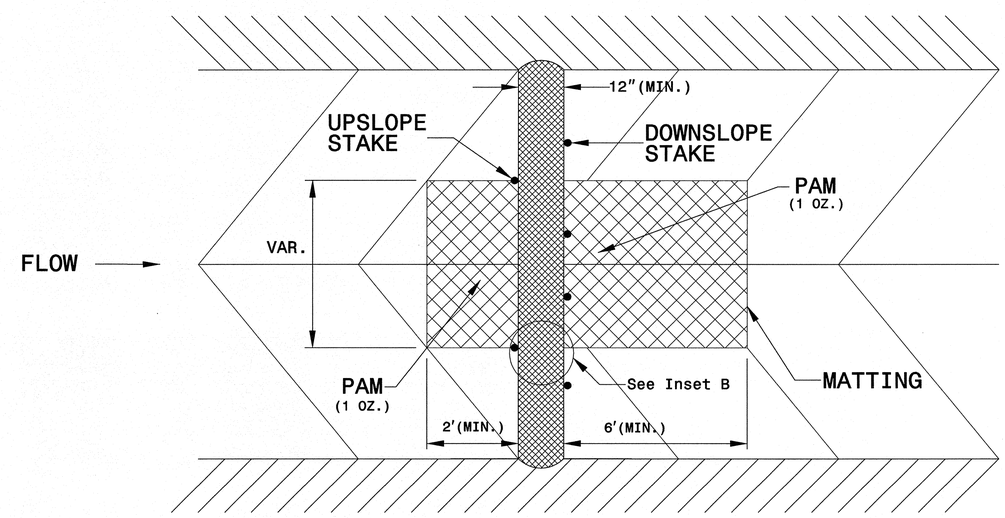


**TOP VIEW**

| 0 2.5 5 | PROJ. REFERENCE NO. | SHEET NO. |
|---|---|---|
| | 17BP.1.R.47 | X-1 |

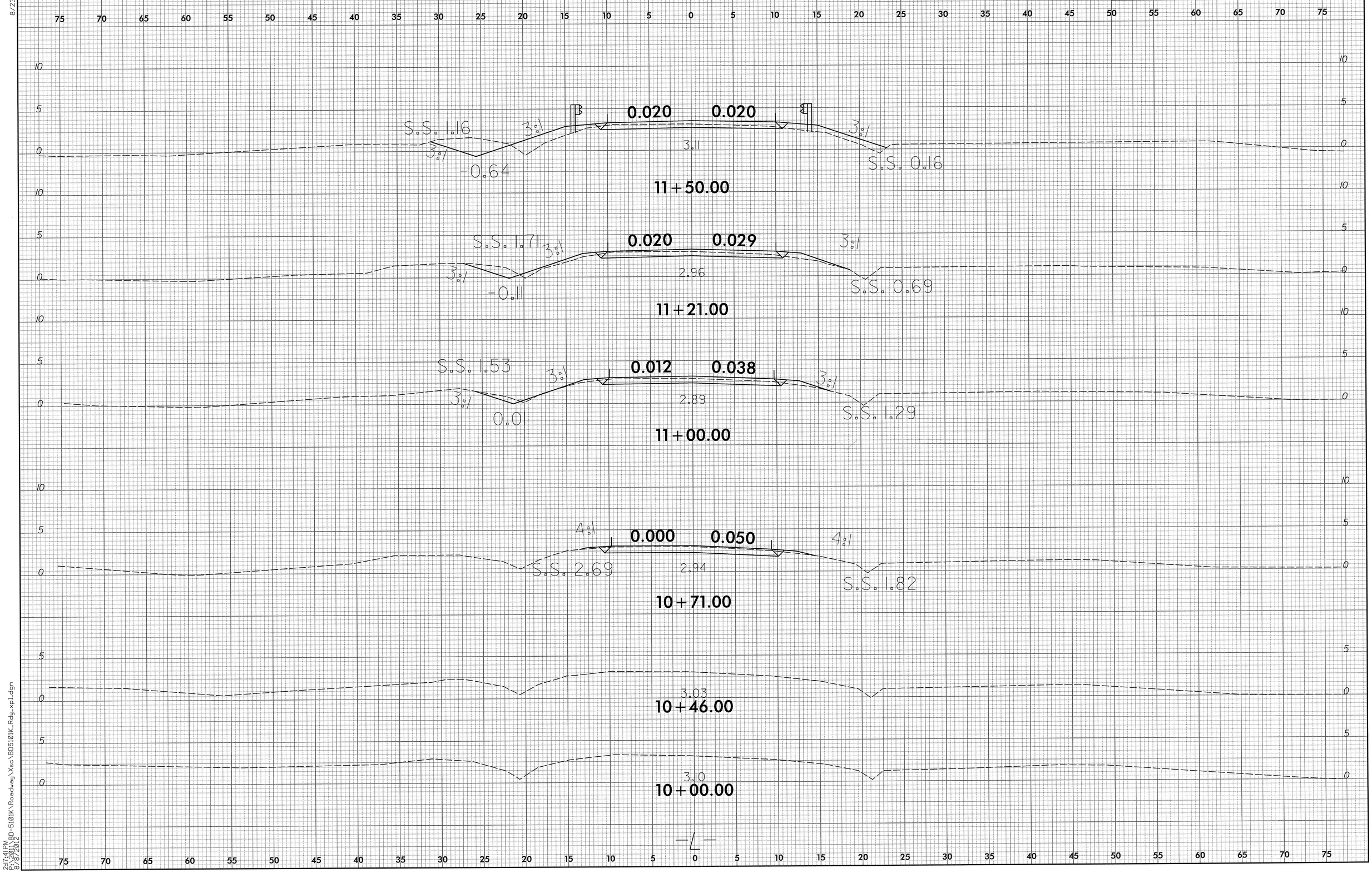




8/23/99

2:17:41 PM
P:\2011\BD-5101K\Roadway\Xsc\BD5101K_Rdy_xp1.dgn
8/8/2012

| 0 2.5 5 | PROJ. REFERENCE NO. | SHEET NO. |
|---|---|---|
| | 17BP.1.R.47 | X-2 |

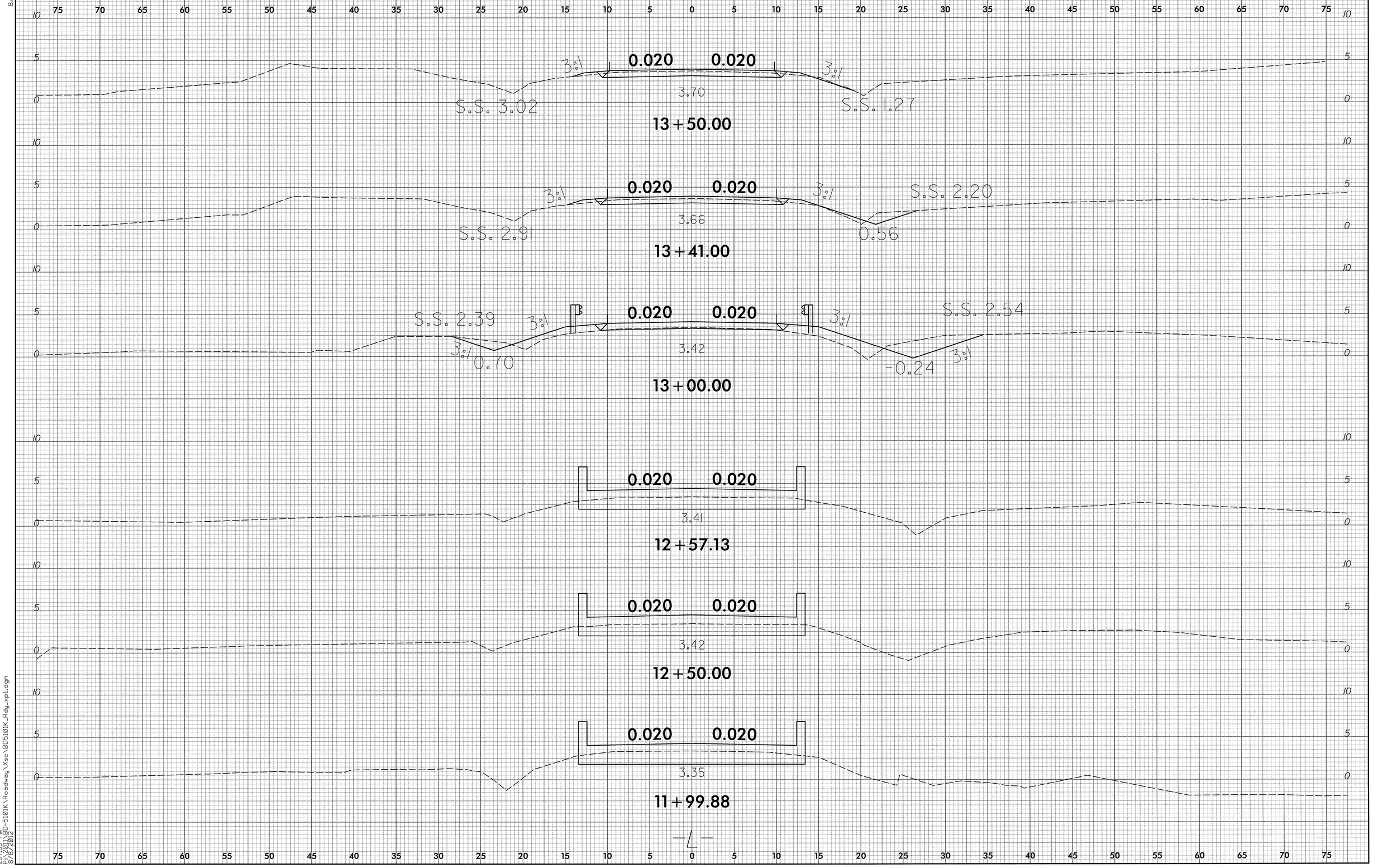


8/23/99

2:17:53 PM
P:\2011\BD-5101K\Roadway\Xsc\BD5101K_Rdy_xpl.dgn
8/8/2012

8/23/99

| 0 2.5 5 | PROJ. REFERENCE NO. | SHEET NO. |
|---|---|---|
| | 17BP.1.R.47 | X-3 |

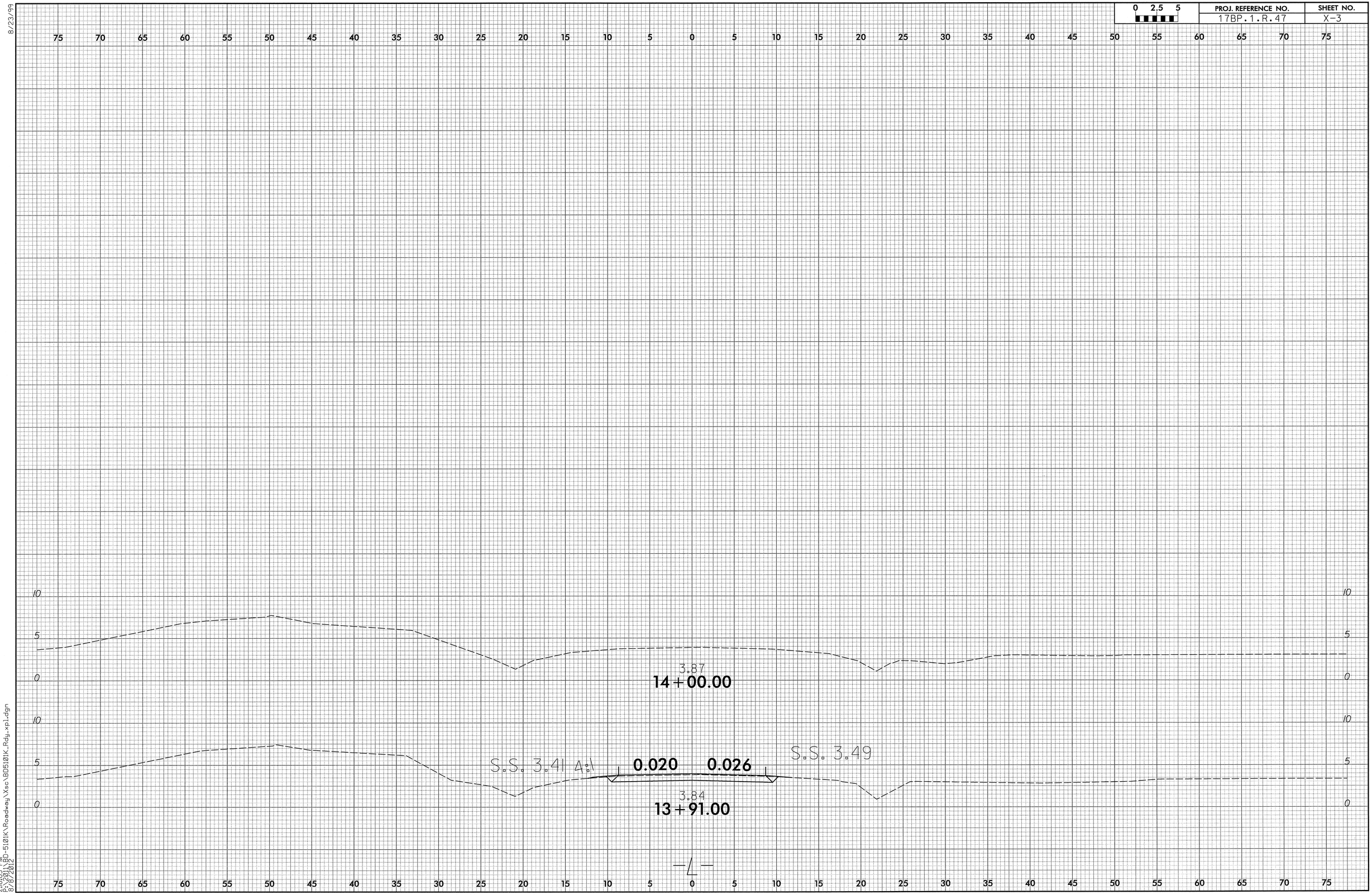


2:8:03 PM
P:\2011\BD-5101K\Roadway\Xsc\BD5101K_Rdy_xp1.dgn
8/8/2012

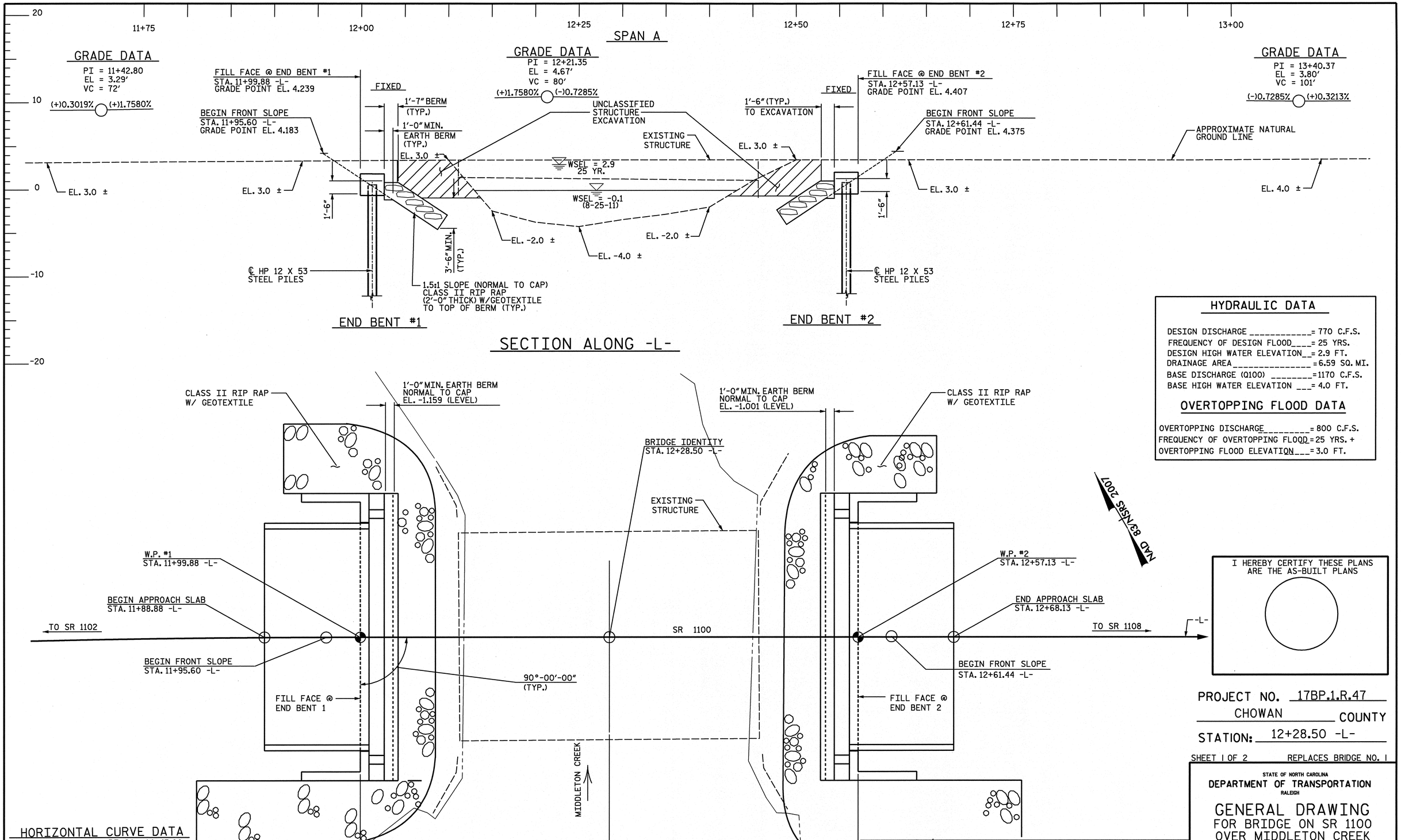


## HYDRAULIC DATA

DESIGN DISCHARGE _____ = 770 C.F.S.
FREQUENCY OF DESIGN FLOOD____ = 25 YRS.
DESIGN HIGH WATER ELEVATION__ = 2.9 FT.
DRAINAGE AREA _____ = 6.59 SQ. MI.
BASE DISCHARGE (Q100) _____ = 1170 C.F.S.
BASE HIGH WATER ELEVATION ___ = 4.0 FT.

## OVERTOPPING FLOOD DATA

OVERTOPPING DISCHARGE_____ = 800 C.F.S.
FREQUENCY OF OVERTOPPING FLOOD = 25 YRS. +
OVERTOPPING FLOOD ELEVATION___ = 3.0 FT.

I HEREBY CERTIFY THESE PLANS ARE THE AS-BUILT PLANS

PROJECT NO. 17BP.1.R.47
CHOWAN COUNTY
STATION: 12+28.50 -L-

SHEET 1 OF 2 REPLACES BRIDGE NO. 1

STATE OF NORTH CAROLINA
DEPARTMENT OF TRANSPORTATION
RALEIGH

# GENERAL DRAWING
## FOR BRIDGE ON SR 1100 OVER MIDDLETON CREEK BETWEEN SR 1102 AND SR 1108

## HORIZONTAL CURVE DATA

| PI Sta 10+98.94 | PI Sta 14+43.00 |
|---|---|
| Δ = 7° 01' 26.3" (RT) | Δ = 8° 04' 34.6" (LT) |
| D = 3° 33' 16.6" | D = 2° 59' 03.3" |
| L = 197.60' | L = 270.63' |
| T = 98.94' | T = 135.55' |
| R = 1,612.13' | R = 1,920.15' |

DRAWN BY : J. PENDERGRAFT DATE : 1/12
CHECKED BY : J. DILWORTH DATE : 1/12

NORTH CAROLINA PROFESSIONAL SEAL 22072 ENGINEER JOHN ARTHUR DILWORTH
8-9-12

WETHERILL ENGINEERING
559 Jones Franklin Rd. Suite 164
Raleigh, N.C. 27606
Bus: 919 851 8077
Fax: 919 851 8107
License: F-0377
TRANSPORTATION PLANNING/DESIGN - BRIDGE/STRUCTURE DESIGN
CIVIL/SITE DESIGN - GIS/GPS - CONSTRUCTION OBSERVATION

| REVISIONS | | | | | | | | SHEET NO. |
|---|---|---|---|---|---|---|---|---|
| NO. | BY: | DATE: | NO. | BY: | DATE: | | | S-1 |
| 1 | | | 3 | | | | | TOTAL SHEETS |
| 2 | | | 4 | | | | | 13 |

P:\2011\BD-5101K\Structures\DGN\BD5101K_str_gd1.dgn
8/9/2012 9:36:45 AM

TBM -2, BRIDGE SPIKE IN 18" SWEET GUM, BL STA. 9+13.00, 41' LT. EL= 7.64', N 854241 E 2737576

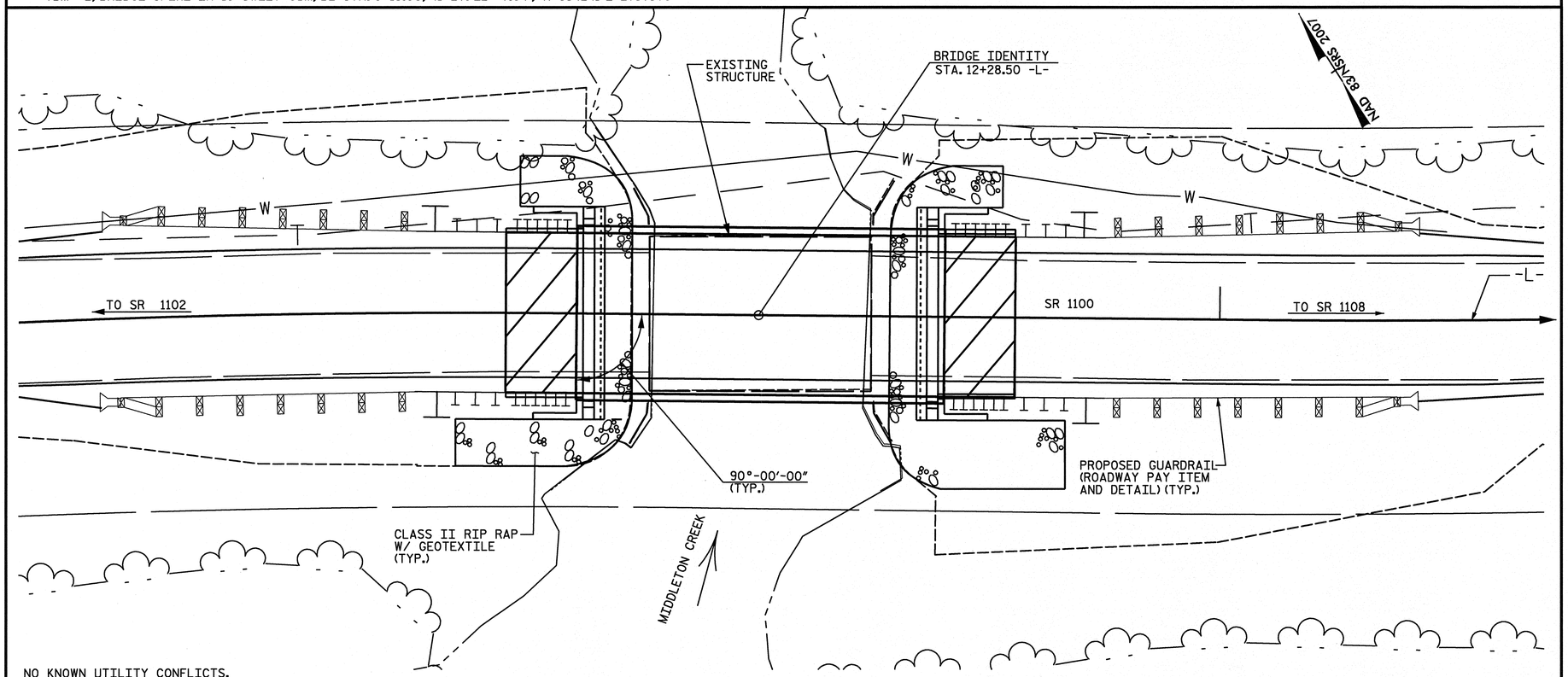


NO KNOWN UTILITY CONFLICTS.

## LOCATION SKETCH

## NOTES:

ASSUMED LIVE LOAD = HL-93 OR ALTERNATE LOADING.

FOR OTHER DESIGN DATA AND GENERAL NOTES, SEE SHEET SN.

FOR EROSION CONTROL MEASURES, SEE EROSION CONTROL PLANS.

THIS BRIDGE HAS BEEN DESIGNED IN ACCORDANCE WITH THE AASHTO LRFD BRIDGE DESIGN SPECIFICATIONS FOR SEISMIC PERFORMANCE ZONE 1.

THE EXISTING STRUCTURE CONSISTING OF 1 SPAN @ 30'-6" WITH A REINFORCED CONCRETE FLOOR ON PPC CHANNELS SUPERSTRUCTURE AND A CLEAR ROADWAY WIDTH OF 24'-4" ON A SUBSTRUCTURE CONSISTING OF TIMBER CAPS ON TIMBER PILES AND LOCATED AT THE PROPOSED STRUCTURE LOCATION SHALL BE REMOVED.

REMOVAL OF THE EXISTING BRIDGE SHALL BE PERFORMED SO AS NOT TO ALLOW DEBRIS TO FALL INTO THE WATER. THE CONTRACTOR SHALL REMOVE THE BRIDGE AND SUBMIT PLANS FOR DEMOLITION IN ACCORDANCE WITH ARTICLE 402-2 OF THE STANDARD SPECIFICATIONS.

THE MATERIAL SHOWN IN THE CROSS-HATCHED AREA SHALL BE EXCAVATED FOR A DISTANCE OF 25 FT. EACH SIDE OF CENTERLINE ROADWAY AS DIRECTED BY ENGINEER. THIS WORK WILL BE PAID FOR AT THE CONTRACT LUMP SUM PRICE FOR UNCLASSIFIED STRUCTURE EXCAVATION. SEE SECTION 412 OF THE STANDARD SPECIFICATIONS.

THE SUBSTRUCTURE OF THE EXISTING BRIDGE INDICATED ON THE PLANS IS FROM THE BEST INFORMATION AVAILABLE. SINCE THIS INFORMATION IS SHOWN FOR THE CONVENIENCE OF THE CONTRACTOR, THE CONTRACTOR SHALL HAVE NO CLAIM WHATSOEVER AGAINST THE DEPARTMENT OF TRANSPORTATION FOR ANY DELAYS OR ADDITIONAL COST INCURRED BASED ON DIFFERENCE BETWEEN THE EXISTING BRIDGE SUBSTRUCTURE SHOWN ON THE PLANS AND THE ACTUAL CONDITIONS AT THE PROJECT SITE.

ASPHALT WEARING SURFACE IS INCLUDED IN ROADWAY QUANTITY ON ROADWAY PLANS.

THIS STRUCTURE HAS BEEN DESIGNED IN ACCORDANCE WITH HEC 18, "EVALUATING SCOUR AT BRIDGES", MAY 2001.

FOR SUBMITTAL OF WORKING DRAWINGS, SEE SPECIAL PROVISIONS.

FOR FALSEWORK AND FORMWORK, SEE SPECIAL PROVISIONS.

FOR CRANE SAFETY, SEE SPECIAL PROVISIONS.

FOR GROUT FOR STRUCTURES, SEE SPECIAL PROVISIONS.

## FOUNDATION NOTES:

FOR PILES, SEE SECTION 450 OF THE STANDARD SPECIFICATIONS.

PILES AT END BENT NO. 1 AND END BENT NO. 2 ARE DESIGNED FOR A FACTORED RESISTANCE OF 85 TONS PER PILE. DRIVE PILES TO A REQUIRED DRIVING RESISTANCE OF 145 TONS. THIS REQUIRED DRIVING RESISTANCE INCLUDES ADDITIONAL RESISTANCE FOR DOWNDRAG OR SCOUR.

IT HAS BEEN ESTIMATED THAT A HAMMER WITH AN EQUIVALENT RATED ENERGY IN THE RANGE OF 35 TO 70 FT-KIPS PER BLOW WILL BE REQUIRED TO DRIVE PILES AT END BENT NO. 1 AND END BENT NO. 2. THIS ESTIMATED ENERGY RANGE DOES NOT RELEASE THE CONTRACTOR FROM PROVIDING EQUIPMENT IN ACCORDANCE WITH THE PILE PROVISION.

## TOTAL BILL OF MATERIAL

| | REMOVAL OF EXISTING STRUCTURE | PDA TESTING | UNCLASSIFIED STRUCTURE EXCAVATION | CLASS A CONCRETE | BRIDGE APPROACH SLABS | REINFORCING STEEL | HP 12 x 53 STEEL PILES | | PILE REDRIVES | VERTICAL CONCRETE BARRIER RAIL | RIP RAP CLASS II (2'-0" THICK) | GEOTEXTILE FOR DRAINAGE | ELASTOMERIC BEARINGS | 3'-0" X 1'-9" PRESTRESSED CONCRETE CORED SLABS | |
|---|---|---|---|---|---|---|---|---|---|---|---|---|---|---|---|
| | LUMP SUM | EACH | LUMP SUM | CU. YDS. | LUMP SUM | LBS. | NO. | LIN. FT. | EACH | LIN. FT. | TONS | SQ. YD. | LUMP SUM | NO. | LIN. FT. |
| SUPERSTRUCTURE | LUMP SUM | | | | LUMP SUM | | | | | 110.25 | | | | 9 | 495'-0" |
| END BENT 1 | | 1 | LUMP SUM | 12.4 | | 1847 | 5 | 275 | 1 | | 108 | 120 | | | |
| END BENT 2 | | | LUMP SUM | 12.4 | | 1847 | 5 | 275 | 1 | | 110 | 122 | | | |
| TOTAL | LUMP SUM | 1 | LUMP SUM | 24.8 | LUMP SUM | 3694 | 10 | 550 | 2 | 110.25 | 218 | 242 | LUMP SUM | 9 | 495'-0" |

PROJECT NO. 17BP.1.R.47

CHOWAN COUNTY

STATION: 12+28.50 -L-

SHEET 2 OF 2 REPLACES BRIDGE NO. 1

STATE OF NORTH CAROLINA
DEPARTMENT OF TRANSPORTATION
RALEIGH

GENERAL DRAWING
FOR BRIDGE ON SR 1100
OVER MIDDLETON CREEK
BETWEEN SR 1102 AND SR 1108

NORTH CAROLINA PROFESSIONAL SEAL 22072 ENGINEER JOHN ARTHUR DILWORTH 8-9-12


WETHERILL ENGINEERING
559 Jones Franklin Rd. Suite 164
Raleigh, N.C. 27606
Bus: 919 851 8077
Fax: 919 851 8107
License: F-0377
TRANSPORTATION PLANNING/DESIGN - BRIDGE/STRUCTURE DESIGN
CIVIL/SITE DESIGN - GIS/GPS - CONSTRUCTION OBSERVATION


| REVISIONS | | | | | | SHEET NO. |
|---|---|---|---|---|---|---|
| NO. | BY: | DATE: | NO. | BY: | DATE: | S-2 |
| 1 | | | 3 | | | TOTAL SHEETS |
| 2 | | | 4 | | | 13 |

DRAWN BY : J. PENDERGRAFT DATE : 1/12
CHECKED BY : J. DILWORTH DATE : 1/12

P:\2011\BD-5101K\Structures\DGN\BD5101K_str_typ1.dgn
8/9/2012 9:37:26 AM

# LOAD AND RESISTANCE FACTOR RATING (LRFD) SUMMARY FOR PRESTRESSED CONCRETE GIRDERS

| LEVEL | | VEHICLE | WEIGHT (W) (TONS) | CONTROLLING LOAD RATING | MINIMUM RATING FACTORS (RF) | TONS = W X RF | STRENGTH I LIMIT STATE | | | | | | | | | | | SERVICE III LIMIT STATE | | | | | | COMMENT NUMBER |
|---|---|---|---|---|---|---|---|---|---|---|---|---|---|---|---|---|---|---|---|---|---|---|---|---|
| | | | | | | | LIVELOAD FACTORS | MOMENT | | | | | SHEAR | | | | | LIVELOAD FACTORS | MOMENT | | | | | |
| | | | | | | | | DISTRIBUTION FACTORS (DF) | RATING FACTOR | SPAN | GIRDER LOCATION | DISTANCE FROM LEFT END OF SPAN (ft) | DISTRIBUTION FACTORS (DF) | RATING FACTOR | SPAN | GIRDER LOCATION | DISTANCE FROM LEFT END OF SPAN (ft) | | DISTRIBUTION FACTORS (DF) | RATING FACTOR | SPAN | GIRDER LOCATION | DISTANCE FROM LEFT END OF SPAN (ft) | |
| DESIGN LOAD RATING | | HL-93(Inv) | N/A | 1 | 1.055 | -- | 1.75 | 0.275 | 1.23 | 55' | EL | 27 | 0.523 | 1.23 | 55' | EL | 5.4 | 0.80 | 0.275 | **1.05** | 55' | EL | **27** | |
| | | HL-93(Opr) | N/A | -- | 1.591 | -- | 1.35 | 0.275 | 1.59 | 55' | EL | 27 | 0.523 | 1.59 | 55' | EL | 5.4 | N/A | -- | -- | -- | -- | -- | |
| | | HS-20(Inv) | 36.000 | 2 | 1.322 | 47.585 | 1.75 | 0.275 | 1.54 | 55' | EL | 27 | 0.523 | 1.47 | 55' | EL | 5.4 | 0.80 | 0.275 | **1.32** | 55' | EL | **27** | |
| | | HS-20(Opr) | 36.000 | -- | 1.9 | 68.396 | 1.35 | 0.275 | 1.99 | 55' | EL | 27 | 0.523 | 1.9 | 55' | EL | 5.4 | N/A | -- | -- | -- | -- | -- | |
| LEGAL LOAD RATING | SV | SNSH | 13.500 | -- | 2.776 | 37.476 | 1.4 | 0.275 | 4.04 | 55' | EL | 27 | 0.523 | 4.17 | 55' | EL | 5.4 | 0.80 | 0.275 | 2.78 | 55' | EL | 27 | |
| | | SNGARBS2 | 20.000 | -- | 2.155 | 43.095 | 1.4 | 0.275 | 3.14 | 55' | EL | 27 | 0.523 | 3.02 | 55' | EL | 5.4 | 0.80 | 0.275 | 2.15 | 55' | EL | 27 | |
| | | SNAGRIS2 | 22.000 | -- | 2.079 | 45.734 | 1.4 | 0.275 | 3.03 | 55' | EL | 27 | 0.523 | 2.83 | 55' | EL | 5.4 | 0.80 | 0.275 | 2.08 | 55' | EL | 27 | |
| | | SNCOTTS3 | 27.250 | -- | 1.384 | 37.708 | 1.4 | 0.275 | 2.01 | 55' | EL | 27 | 0.523 | 2.09 | 55' | EL | 5.4 | 0.80 | 0.275 | 1.38 | 55' | EL | 27 | |
| | | SNAGGRS4 | 34.925 | -- | 1.189 | 41.527 | 1.4 | 0.275 | 1.73 | 55' | EL | 27 | 0.523 | 1.77 | 55' | EL | 5.4 | 0.80 | 0.275 | 1.19 | 55' | EL | 27 | |
| | | SNS5A | 35.550 | -- | 1.16 | 41.255 | 1.4 | 0.275 | 1.69 | 55' | EL | 27 | 0.523 | 1.82 | 55' | EL | 5.4 | 0.80 | 0.275 | 1.16 | 55' | EL | 27 | |
| | | SNS6A | 39.950 | -- | 1.079 | 43.102 | 1.4 | 0.275 | 1.57 | 55' | EL | 27 | 0.523 | 1.68 | 55' | EL | 5.4 | 0.80 | 0.275 | 1.08 | 55' | EL | 27 | |
| | | SNS7B | 42.000 | -- | 1.028 | 43.175 | 1.4 | 0.275 | 1.5 | 55' | EL | 27 | 0.523 | 1.67 | 55' | EL | 5.4 | 0.80 | 0.275 | 1.03 | 55' | EL | 27 | |
| | TTST | TNAGRIT3 | 33.000 | -- | 1.32 | 43.556 | 1.4 | 0.275 | 1.92 | 55' | EL | 27 | 0.523 | 1.98 | 55' | EL | 5.4 | 0.80 | 0.275 | 1.32 | 55' | EL | 27 | |
| | | TNT4A | 33.075 | -- | 1.33 | 43.979 | 1.4 | 0.275 | 1.94 | 55' | EL | 27 | 0.523 | 1.91 | 55' | EL | 5.4 | 0.80 | 0.275 | 1.33 | 55' | EL | 27 | |
| | | TNT6A | 41.600 | -- | 1.101 | 45.811 | 1.4 | 0.275 | 1.6 | 55' | EL | 27 | 0.523 | 1.83 | 55' | EL | 5.4 | 0.80 | 0.275 | 1.10 | 55' | EL | 27 | |
| | | TNT7A | 42.000 | -- | 1.114 | 46.804 | 1.4 | 0.275 | 1.62 | 55' | EL | 27 | 0.523 | 1.71 | 55' | EL | 5.4 | 0.80 | 0.275 | 1.11 | 55' | EL | 27 | |
| | | TNT7B | 42.000 | -- | 1.163 | 48.848 | 1.4 | 0.275 | 1.69 | 55' | EL | 27 | 0.523 | 1.62 | 55' | EL | 5.4 | 0.80 | 0.275 | 1.16 | 55' | EL | 27 | |
| | | TNAGRIT4 | 43.000 | -- | 1.101 | 47.33 | 1.4 | 0.275 | 1.6 | 55' | EL | 27 | 0.523 | 1.56 | 55' | EL | 5.4 | 0.80 | 0.275 | 1.10 | 55' | EL | 27 | |
| | | TNAGT5A | 45.000 | -- | 1.031 | 46.405 | 1.4 | 0.275 | 1.5 | 55' | EL | 27 | 0.523 | 1.58 | 55' | EL | 5.4 | 0.80 | 0.275 | 1.03 | 55' | EL | 27 | |
| | | TNAGT5B | 45.000 | 3 | 1.013 | 45.582 | 1.4 | 0.275 | 1.47 | 55' | EL | 27 | 0.523 | 1.48 | 55' | EL | 5.4 | 0.80 | 0.275 | **1.01** | 55' | EL | **27** | |

## LOAD FACTORS:

| DESIGN LOAD RATING FACTORS | LIMIT STATE | $\gamma_{DC}$ | $\gamma_{DW}$ |
|---|---|---|---|
| | STRENGTH I | 1.25 | 1.50 |
| | SERVICE III | 1.00 | 1.00 |

## NOTES:

MINIMUM RATING FACTORS ARE BASED ON THE STRENGTH I AND SERVICE III LIMIT STATES.

ALLOWABLE STRESSES FOR SERVICE III LIMIT STATE ARE AS REQUIRED FOR DESIGN.

## COMMENTS:

1.
2.
3.
4.

## CONTROLLING LOAD RATING

(1) DESIGN LOAD RATING (HL-93)
(2) DESIGN LOAD RATING (HS-20)
(3) LEGAL LOAD RATING **
** SEE CHART FOR VEHICLE TYPE

## GIRDER LOCATION

I - INTERIOR GIRDER
EL - EXTERIOR LEFT GIRDER
ER - EXTERIOR RIGHT GIRDER

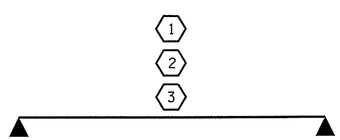


LRFR SUMMARY

FOR SPAN 'A'

PROJECT NO. 17BP.1.R.47
CHOWAN COUNTY
STATION: 12+28.50 -L-

STATE OF NORTH CAROLINA
DEPARTMENT OF TRANSPORTATION
RALEIGH

STANDARD
LRFR SUMMARY FOR 55' CORED SLAB UNIT 90° SKEW
(NON-INTERSTATE TRAFFIC)

NORTH CAROLINA PROFESSIONAL SEAL 22005 ENGINEER A. KEITH PASCHAL
8/9/12

| REVISIONS | | | | | | SHEET NO. |
|---|---|---|---|---|---|---|
| NO. | BY: | DATE: | NO. | BY: | DATE: | S-3 |
| 1 | | | 3 | | | TOTAL SHEETS |
| 2 | | | 4 | | | 13 |

| | |
|---|---|
| ASSEMBLED BY : E. K. POPE | DATE : 12-16-11 |
| CHECKED BY : A. K. PASCHAL | DATE : 1-19-12 |
| DRAWN BY : CVC 6/10 | |
| CHECKED BY : DNS 6/10 | |

09-AUG-2012 07:24
S:\DPG1\Keith\BD-5101K\BD5101K_SD_CS.dgn
kpaschal

STD. NO. 21LRFR1_90S_55L

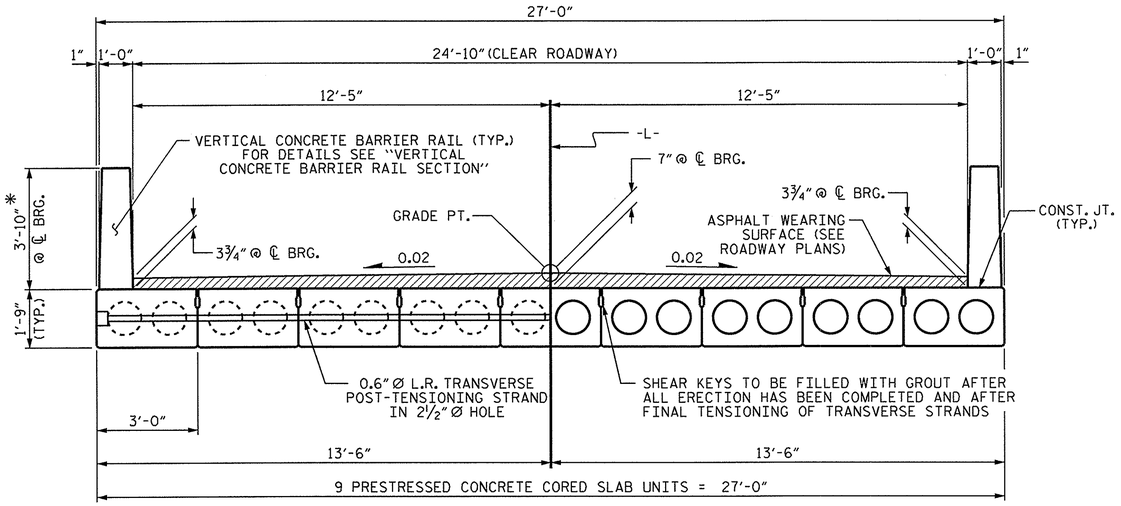


HALF SECTION
AT INTERMEDIATE DIAPHRAGMS

HALF SECTION
THROUGH VOIDS

## TYPICAL SECTION

* - THE MAXIMUM BARRIER RAIL HEIGHT AND ASPHALT THICKNESS IS SHOWN. THE HEIGHT OF THE BARRIER RAIL AND ASPHALT THICKNESS VARIES WHILE THE TOP OF THE BARRIER RAIL FOLLOWS THE PROFILE OF THE GUTTERLINE. FOR RAIL HEIGHT DETAILS AND ASPHALT THICKNESS SEE THE "VERTICAL CONCRETE BARRIER RAIL SECTION" DETAIL.

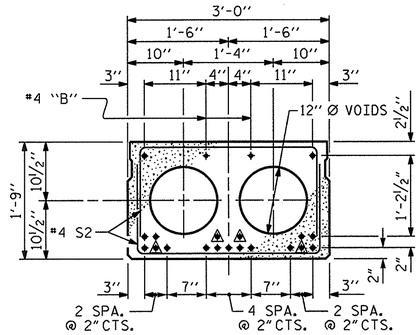


INTERIOR SLAB SECTION
(55' UNIT)
(19 STRANDS REQUIRED)

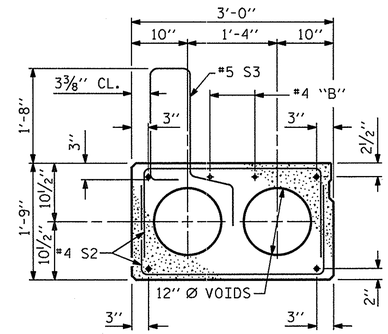


EXT. SLAB SECTION
(FOR PRESTRESSED STRAND LAYOUT, SEE INTERIOR SLAB SECTION.)

## 0.6" Ø LOW RELAXATION STRAND LAYOUT

▲ BOND SHALL BE BROKEN ON THESE STRANDS FOR A DISTANCE OF 6'-0" FROM END OF CORED SLAB UNIT. SEE STANDARD SPECIFICATIONS, ARTICLE 1078-7.

■ BOND SHALL BE BROKEN ON THESE STRANDS FOR A DISTANCE OF 2'-0" FROM END OF CORED SLAB UNIT. SEE STANDARD SPECIFICATIONS, ARTICLE 1078-7.

◉ OPTIONAL FULL LENGTH DEBONDED STRANDS. THESE STRANDS ARE NOT REQUIRED. IF THE FABRICATOR CHOOSES TO INCLUDE THESE STRANDS IN THE CORED SLAB UNIT, THE STRANDS SHALL BE DEBONDED FOR THE FULL LENGTH OF THE UNIT AT NO ADDITIONAL COST. SEE STANDARD SPECIFICATIONS, ARTICLE 1078-7.

## DEBONDING LEGEND

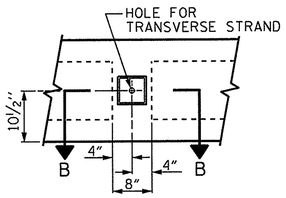


ELEVATION VIEW

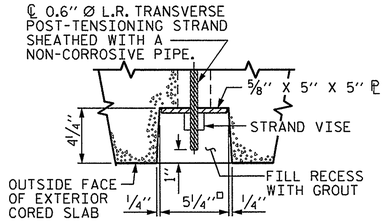


SECTION B-B

## GROUTED RECESS AT END OF POST-TENSIONED STRAND OF CORED SLABS

FIXED END

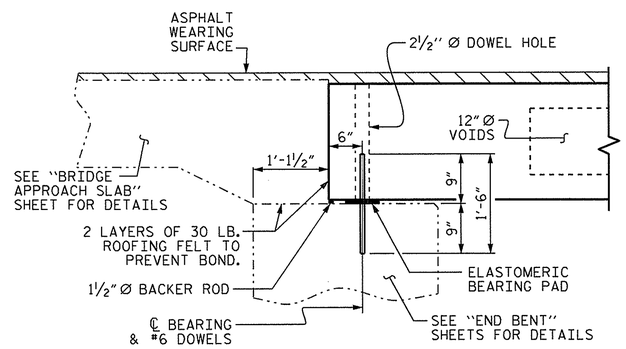


## SECTION AT END BENT

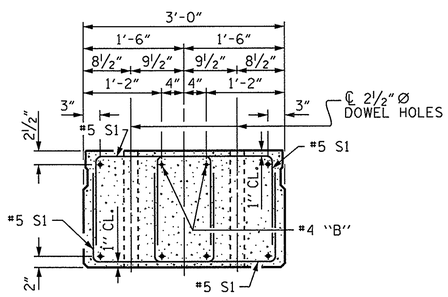


## END ELEVATION

SHOWING PLACEMENT OF DOUBLE STIRRUPS AND LOCATION OF DOWEL HOLES. (STRAND LAYOUT NOT SHOWN.) INTERIOR SLAB UNIT SHOWN-EXTERIOR SLAB UNIT SIMILAR EXCEPT SHEAR KEY LOCATION.

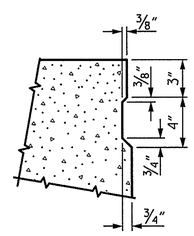


## SHEAR KEY DETAIL

NOTE: OMIT SHEAR KEY ON OUTSIDE FACE OF EXTERIOR CORED SLABS.

PROJECT NO. 17BP.1.R.47
CHOWAN COUNTY
STATION: 12+28.50 -L-

SHEET 1 OF 3

STATE OF NORTH CAROLINA
DEPARTMENT OF TRANSPORTATION
RALEIGH

STANDARD
3'-0" X 1'-9"
PRESTRESSED CONCRETE CORED SLAB UNIT
90° SKEW

NORTH CAROLINA PROFESSIONAL SEAL 022005 ENGINEER KEITH PASCHAL
8/9/12

| REVISIONS | | | | | | SHEET NO. |
|---|---|---|---|---|---|---|
| NO. | BY: | DATE: | NO. | BY: | DATE: | S-4 |
| 1 | | | 3 | | | TOTAL SHEETS |
| 2 | | | 4 | | | 13 |

| | | |
|---|---|---|
| ASSEMBLED BY : E. K. POPE | | DATE : 12-16-11 |
| CHECKED BY : A. K. PASCHAL | | DATE : 1-19-12 |
| DRAWN BY : DGE 5/09 | REV. 12/11 | MAA/AAC |
| CHECKED BY : BCH 6/09 | | |

STD. NO. 21" PCS2_27_90S

09-AUG-2012 07:24
S:\DPG1\Keith\BD-5101K\BD5101K_SD_CS.dgn
kpaschal

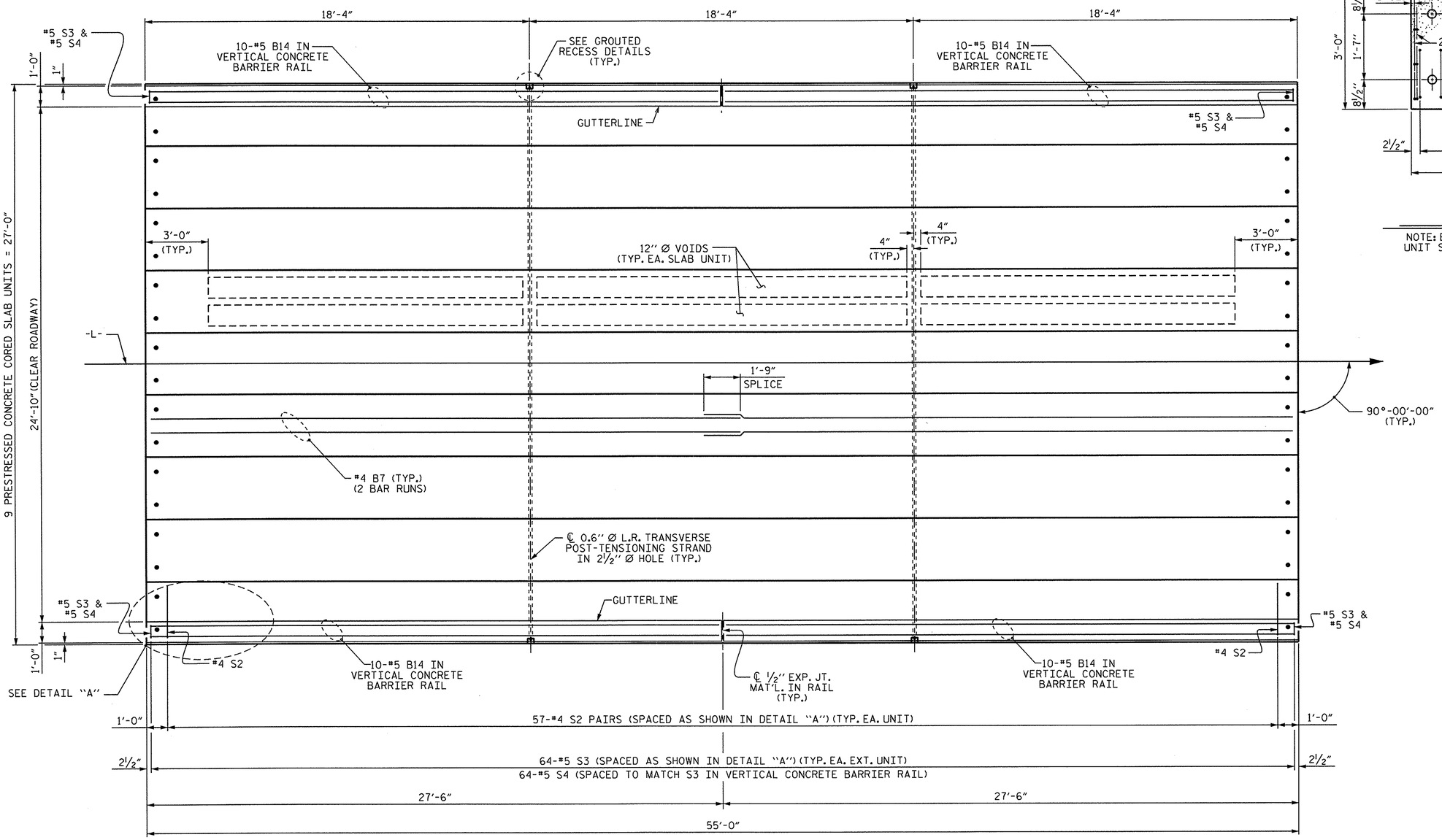


## PLAN OF UNIT

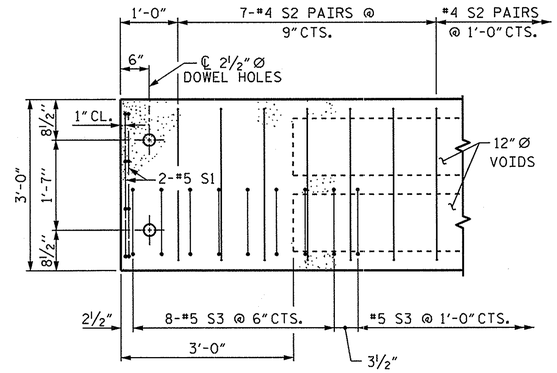


## DETAIL "A"

NOTE: EXTERIOR UNIT SHOWN - INTERIOR UNIT SIMILAR EXCEPT OMIT #5 S3 BARS.

PROJECT NO. 17BP.1.R.47

CHOWAN COUNTY

STATION: 12+28.50 -L-

SHEET 2 OF 3

STATE OF NORTH CAROLINA
DEPARTMENT OF TRANSPORTATION
RALEIGH

# PLAN OF 55' UNIT 24'-10" CLEAR ROADWAY 90° SKEW

NORTH CAROLINA PROFESSIONAL SEAL 22005 ENGINEER A. KEITH PASCHAL
8/9/12

| REVISIONS | | | | | | SHEET NO. |
|---|---|---|---|---|---|---|
| NO. | BY: | DATE: | NO. | BY: | DATE: | S-5 |
| 1 | | | 3 | | | TOTAL SHEETS |
| 2 | | | 4 | | | 13 |

| | | |
|---|---|---|
| ASSEMBLED BY : E. K. POPE | | DATE : 12-16-11 |
| CHECKED BY : A. K. PASCHAL | | DATE : 1-19-12 |
| DRAWN BY : DGE 5/09 | REV. 12/5/11 | MAA/AAC |
| CHECKED BY : BCH 6/09 | | |

09-AUG-2012 07:24
S:\OPGI\Keith\BD-5101K\BD5101K_SD_CS.dgn
kpaschal

STD. NO. 21" PCS_27_90S_55L

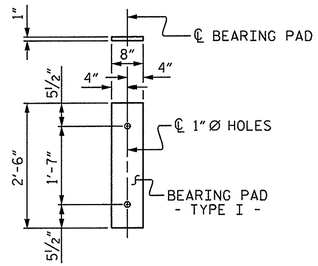


FIXED END
( TYPE I - 18 REQ'D )

## ELASTOMERIC BEARING DETAILS

ELASTOMER IN ALL BEARINGS SHALL BE 50 DUROMETER HARDNESS.

| CORED SLABS REQUIRED | | | |
|---|---|---|---|
| | NUMBER | LENGTH | TOTAL LENGTH |
| 55' UNIT | | | |
| EXTERIOR C.S. | 2 | 55'-0" | 110'-0" |
| INTERIOR C.S. | 7 | 55'-0" | 385'-0" |
| TOTAL | 9 | | 495'-0" |

| DEAD LOAD DEFLECTION AND CAMBER | |
|---|---|
| | 3'-0" x 1'-9" |
| 55' CORED SLAB UNIT | 0.6"Ø L.R. STRAND |
| CAMBER ( SLAB ALONE IN PLACE ) | 2½" ↑ |
| DEFLECTION DUE TO SUPERIMPOSED DEAD LOAD** | ¼" ↓ |
| FINAL CAMBER | 2¼" ↑ |

** INCLUDES FUTURE WEARING SURFACE

## BAR TYPES

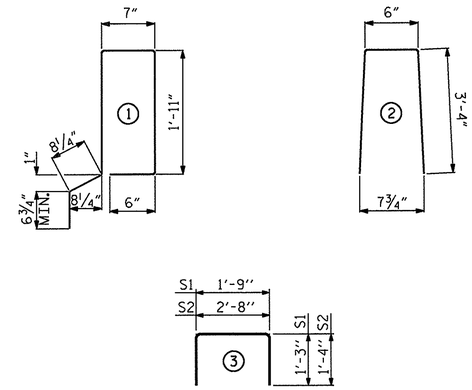


ALL BAR DIMENSIONS ARE OUT TO OUT

## NOTES

ALL PRESTRESSING STRANDS SHALL BE 7-WIRE LOW RELAXATION GRADE 270 STRANDS AND SHALL CONFORM TO AASHTO M203 EXCEPT FOR SAMPLING REQUIREMENTS WHICH SHALL BE IN ACCORDANCE WITH THE STANDARD SPECIFICATIONS.

ALL REINFORCING STEEL CAST WITH THE CORED SLAB SECTIONS SHALL BE GRADE 60 AND SHALL BE INCLUDED IN THE UNIT PRICE BID FOR PRESTRESSED CONCRETE CORED SLABS.

RECESSES FOR TRANSVERSE STRANDS SHALL BE GROUTED AFTER THE TENSIONING OF THE STRANDS.

THE 2½"Ø DOWEL HOLES AT FIXED ENDS OF SLAB SECTIONS SHALL BE FILLED WITH NON-SHRINK GROUT.

THE 2"Ø BACKER ROD SHALL CONFORM TO THE REQUIREMENTS OF TYPE M BOND BREAKER. SEE SECTION 1028 OF THE STANDARD SPECIFICATIONS.

WHEN CORED SLABS ARE CAST, AN INTERNAL HOLD-DOWN SYSTEM SHALL BE EMPLOYED TO PREVENT VOIDS FROM RISING OR MOVING SIDEWAYS. AT LEAST SIX WEEKS PRIOR TO CASTING CORED SLABS, THE CONTRACTOR SHALL SUBMIT TO THE ENGINEER FOR REVIEW AND COMMENT, DETAILED DRAWINGS OF THE PROPOSED HOLD-DOWN SYSTEM. IN ADDITION TO STRUCTURAL DETAILS, LOCATION AND SPACING OF THE HOLD-DOWNS SHALL BE INDICATED.

ALL REINFORCING STEEL IN THE VERTICAL CONCRETE BARRIER RAIL SHALL BE EPOXY COATED.

PRESTRESSING STRANDS SHALL BE CUT FLUSH WITH THE CORED SLAB UNIT ENDS.

APPLY EPOXY PROTECTIVE COATING TO CORED SLAB UNIT ENDS.

GROOVED CONTRACTION JOINTS, ½" IN DEPTH, SHALL BE TOOLED IN ALL EXPOSED FACES OF THE BARRIER RAIL AND IN ACCORDANCE WITH ARTICLE 825-10(B) OF THE STANDARD SPECIFICATIONS. A CONTRACTION JOINT SHALL BE LOCATED AT EACH THIRD POINT BETWEEN BARRIER RAIL EXPANSION JOINTS. ONLY ONE CONTRACTION JOINT IS REQUIRED AT MIDPOINT OF BARRIER RAIL SEGMENTS LESS THAN 20 FEET IN LENGTH AND NO CONTRACTION JOINTS ARE REQUIRED FOR THOSE SEGMENTS LESS THAN 10 FEET IN LENGTH.

TRANSVERSE POST TENSIONING OF THE CORED SLAB UNITS SHALL BE DONE IN ACCORDANCE WITH THE STANDARD SPECIFICATIONS.

THE TRANSFER OF LOAD FROM THE ANCHORAGES TO THE CORED SLAB UNIT SHALL BE DONE WHEN THE CONCRETE HAS REACHED A COMPRESSIVE STRENGTH OF NOT LESS THAN THE REQUIRED STRENGTH SHOWN IN THE "CONCRETE RELEASE STRENGTH" TABLE.

FOR GROUT FOR STRUCTURES, SEE SPECIAL PROVISIONS.

| GRADE 270 STRANDS | |
|---|---|
| | 0.6"Ø L.R. |
| AREA ( SQUARE INCHES ) | 0.217 |
| ULTIMATE STRENGTH ( LBS. PER STRAND ) | 58,600 |
| APPLIED PRESTRESS ( LBS. PER STRAND ) | 43,950 |

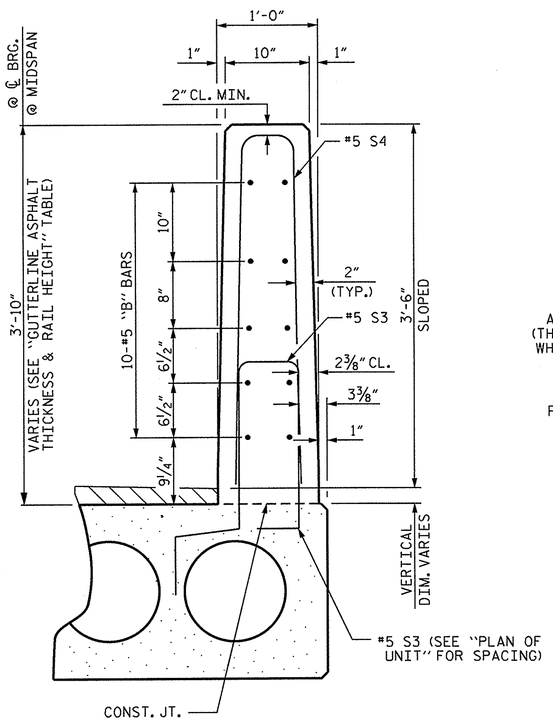


## VERTICAL CONCRETE BARRIER RAIL SECTION

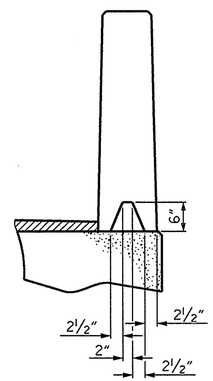


SECTION S-S
AT DAM IN OPEN JOINT
(THIS IS TO BE USED ONLY WHEN SLIP FORM IS USED)

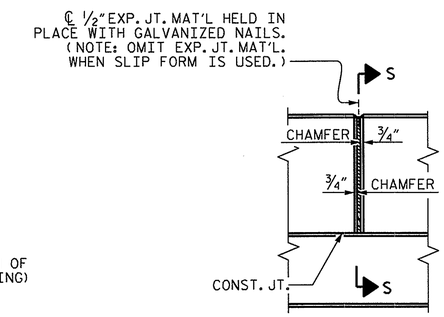


ELEVATION AT EXPANSION JOINTS

| BILL OF MATERIAL FOR VERTICAL CONCRETE BARRIER RAIL | | | | | | |
|---|---|---|---|---|---|---|
| BAR | BARS PER PAIR OF EXTERIOR UNITS | TOTAL NO. | SIZE | TYPE | LENGTH | WEIGHT |
| | 55' UNIT | | | | | |
| | | | | | | |
| *B14 | 40 | 40 | #5 | STR | 27'-1" | 1130 |
| | | | | | | |
| * S4 | 128 | 128 | #5 | 2 | 7'-2" | 957 |
| | | | | | | |
| *EPOXY COATED REINFORCING STEEL | | | | LBS. | | 2087 |
| CLASS AA CONCRETE | | | | CU.YDS. | | 14.4 |
| TOTAL VERTICAL CONCRETE BARRIER RAIL | | | | LN. FT. | | 110.25 |

| GUTTERLINE ASPHALT THICKNESS & RAIL HEIGHT | | |
|---|---|---|
| 24'-10" CLEAR ROADWAY | ASPHALT OVERLAY THICKNESS | RAIL HEIGHT |
| | @ MID-SPAN | @ MID-SPAN |
| | NORMAL CROWN SECTION | |
| 55' UNITS | 1½" | 3'-7¾" |

| CONCRETE RELEASE STRENGTH | |
|---|---|
| | |
| UNIT | PSI |
| 55' UNITS | 4900 |

| BILL OF MATERIAL FOR ONE 55' CORED SLAB UNIT | | | | | | | |
|---|---|---|---|---|---|---|---|
| | | | | EXTERIOR UNIT | | INTERIOR UNIT | |
| BAR | NUMBER | SIZE | TYPE | LENGTH | WEIGHT | LENGTH | WEIGHT |
| B7 | 4 | #4 | STR | 28'-3" | 75 | 28'-3" | 75 |
| | | | | | | | |
| S1 | 8 | #5 | 3 | 4'-3" | 35 | 4'-3" | 35 |
| S2 | 114 | #4 | 3 | 5'-4" | 406 | 5'-4" | 406 |
| * S3 | 64 | #5 | 1 | 6'-2" | 412 | | |
| | | | | | | | |
| | | | | | | | |
| REINFORCING STEEL | | | LBS. | | 516 | | 516 |
| *EPOXY COATED REINFORCING STEEL | | | LBS. | | 412 | | |
| 6500 P.S.I. CONCRETE | | | CU. YDS. | | 7.8 | | 7.8 |
| | | | | | | | |
| 0.6"Ø L.R. STRANDS | | | No. | | 19 | | 19 |

PROJECT NO. 17BP.1.R.47
CHOWAN COUNTY
STATION: 12+28.50 -L-

SHEET 3 OF 3

STATE OF NORTH CAROLINA
DEPARTMENT OF TRANSPORTATION
RALEIGH

STANDARD
3'-0" X 1'-9"
PRESTRESSED CONCRETE
CORED SLAB UNIT
90° SKEW

NORTH CAROLINA PROFESSIONAL SEAL 22005 ENGINEER A. KEITH PASCHAL
8/9/12

| ASSEMBLED BY : E. K. POPE | DATE : 12-16-11 |
|---|---|
| CHECKED BY : A. K. PASCHAL | DATE : 1-19-12 |
| DRAWN BY : DGE 5/09 | REV. 12/11 MAA/AAC |
| CHECKED BY : BCH 6/09 | |

| REVISIONS | | | | | | SHEET NO. |
|---|---|---|---|---|---|---|
| NO. | BY: | DATE: | NO. | BY: | DATE: | S-6 |
| 1 | | | 3 | | | TOTAL SHEETS |
| 2 | | | 4 | | | 13 |

09-AUG-2012 07:23
S:\DPG1\Keith\BD-5101K\BD5101K_SD_CS.dgn
kpaschal

STD. NO. 21"PCS3_27_90S

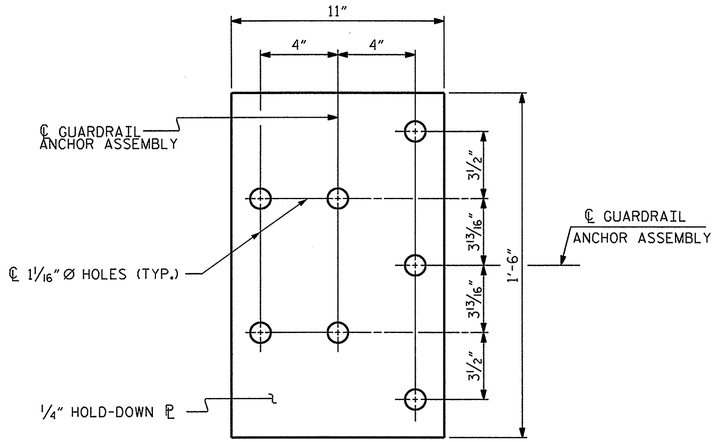


PLAN

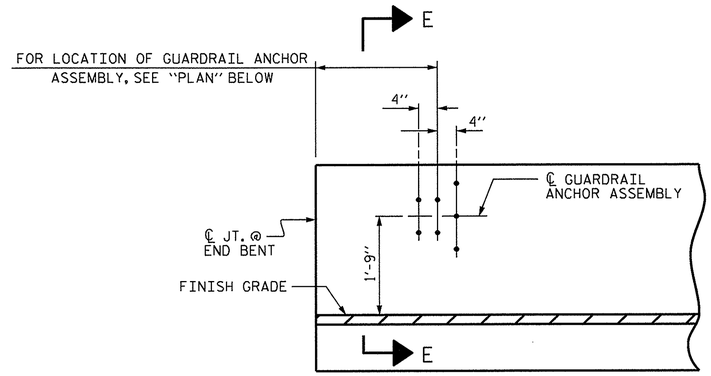


ELEVATION

## NOTES

THE GUARDRAIL ANCHOR ASSEMBLY SHALL CONSIST OF A 1/4" HOLD DOWN PLATE AND 7 - 7/8" Ø BOLTS WITH NUTS AND WASHERS.

THE HOLD-DOWN PLATE SHALL CONFORM TO AASHTO M270 GRADE 36. AFTER FABRICATION, THE HOLD-DOWN PLATE SHALL BE HOT-DIP GALVANIZED IN ACCORDANCE WITH AASHTO M111.

BOLTS SHALL CONFORM TO THE REQUIREMENTS OF ASTM A307 AND NUTS SHALL CONFORM TO THE REQUIREMENTS OF AASHTO M291. BOLTS, NUTS AND WASHERS SHALL BE GALVANIZED. (AT THE CONTRACTOR'S OPTION, STAINLESS STEEL BOLTS, NUTS AND WASHERS MAY BE USED AS AN ALTERNATE FOR THE 7/8" Ø GALVANIZED BOLTS, NUTS AND WASHERS. THEY SHALL CONFORM TO OR EXCEED THE MECHANICAL REQUIREMENTS OF ASTM A307. THE USE OF THIS ALTERNATE SHALL BE APPROVED BY THE ENGINEER.)

THE GUARDRAIL ANCHOR ASSEMBLY IS REQUIRED AT ALL POINTS WHERE APPROACH GUARDRAIL IS TO BE ATTACHED TO THE END OF BARRIER RAIL. FOR POINTS OF ATTACHMENT, SEE SKETCH.

AFTER INSTALLATION, THE EXPOSED THREAD OF THE BOLT SHALL BE BURRED WITH A SHARP POINTED TOOL.

THE COST OF THE GUARDRAIL ANCHOR ASSEMBLY SHALL BE INCLUDED IN THE UNIT CONTRACT PRICE BID FOR VERTICAL CONCRETE BARRIER RAIL.

THE VERTICAL REINFORCING BARS MAY BE SHIFTED SLIGHTLY IN THE VERTICAL CONCRETE BARRIER RAIL TO CLEAR ASSEMBLY BOLTS.

THE 1 1/4" Ø HOLES SHALL BE FORMED OR DRILLED WITH A CORE BIT. IMPACT TOOLS WILL NOT BE PERMITTED. ANY CONCRETE DAMAGED BY THIS WORK SHALL BE REPAIRED TO THE SATISFACTION OF THE ENGINEER.

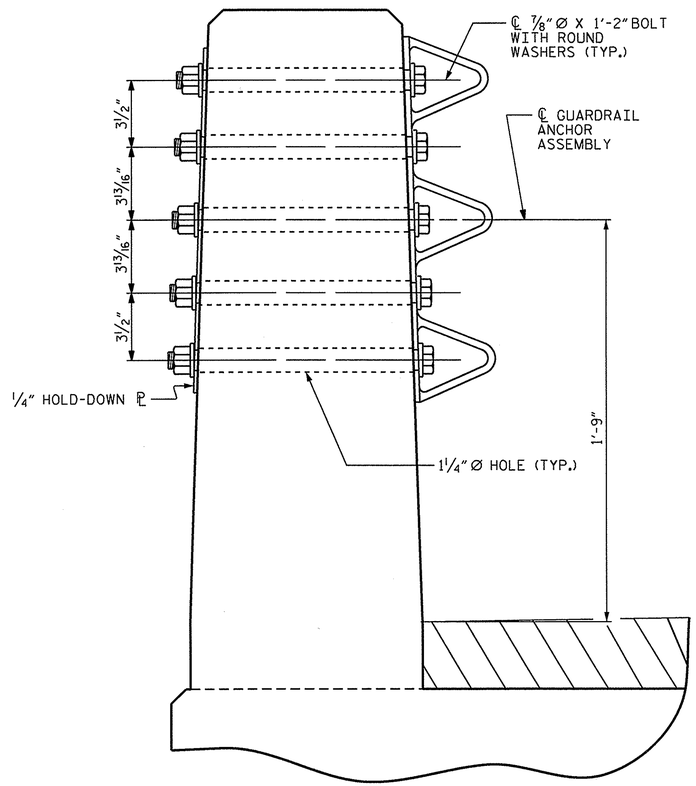


SECTION E-E

## GUARDRAIL ANCHOR ASSEMBLY DETAILS

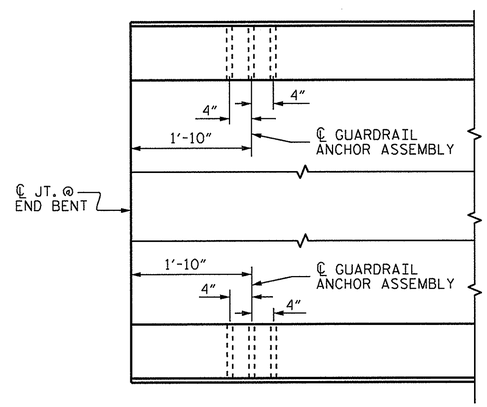


PLAN

## LOCATION OF ANCHORS FOR GUARDRAIL

END BENT #1 SHOWN, END BENT #2 SIMILAR.

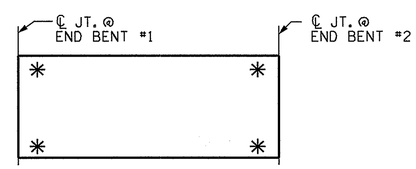


## SKETCH SHOWING POINTS OF ATTACHMENT

✳ DENOTES GUARDRAIL ANCHOR ASSEMBLY

PROJECT NO. 17BP.1.R.47
CHOWAN COUNTY
STATION: 12+28.50 -L-

STATE OF NORTH CAROLINA
DEPARTMENT OF TRANSPORTATION
RALEIGH

STANDARD
GUARDRAIL ANCHORAGE FOR VERTICAL CONCRETE BARRIER RAIL

NORTH CAROLINA PROFESSIONAL SEAL 22005 ENGINEER A. KEITH PASCHAL
8/9/12

| REVISIONS | | | | | | SHEET NO. |
|---|---|---|---|---|---|---|
| NO. | BY: | DATE: | NO. | BY: | DATE: | S-7 |
| 1 | | | 3 | | | TOTAL SHEETS |
| 2 | | | 4 | | | 13 |

| | |
|---|---|
| ASSEMBLED BY : E. K. POPE DATE : 12-16-11 | |
| CHECKED BY : A. K. PASCHAL DATE : 1-19-12 | |
| DRAWN BY : MAA 5/10 | ADDED 5/6/10 |
| CHECKED BY : GM 5/10 | REV. 10/1/11 MAA/GM |

09-AUG-2012 07:23
S:\DPG1\Keith\BD-5101K\BD5101K_SD_CS.dgn
kpaschal

(SHT 1) STD. NO. GRA3

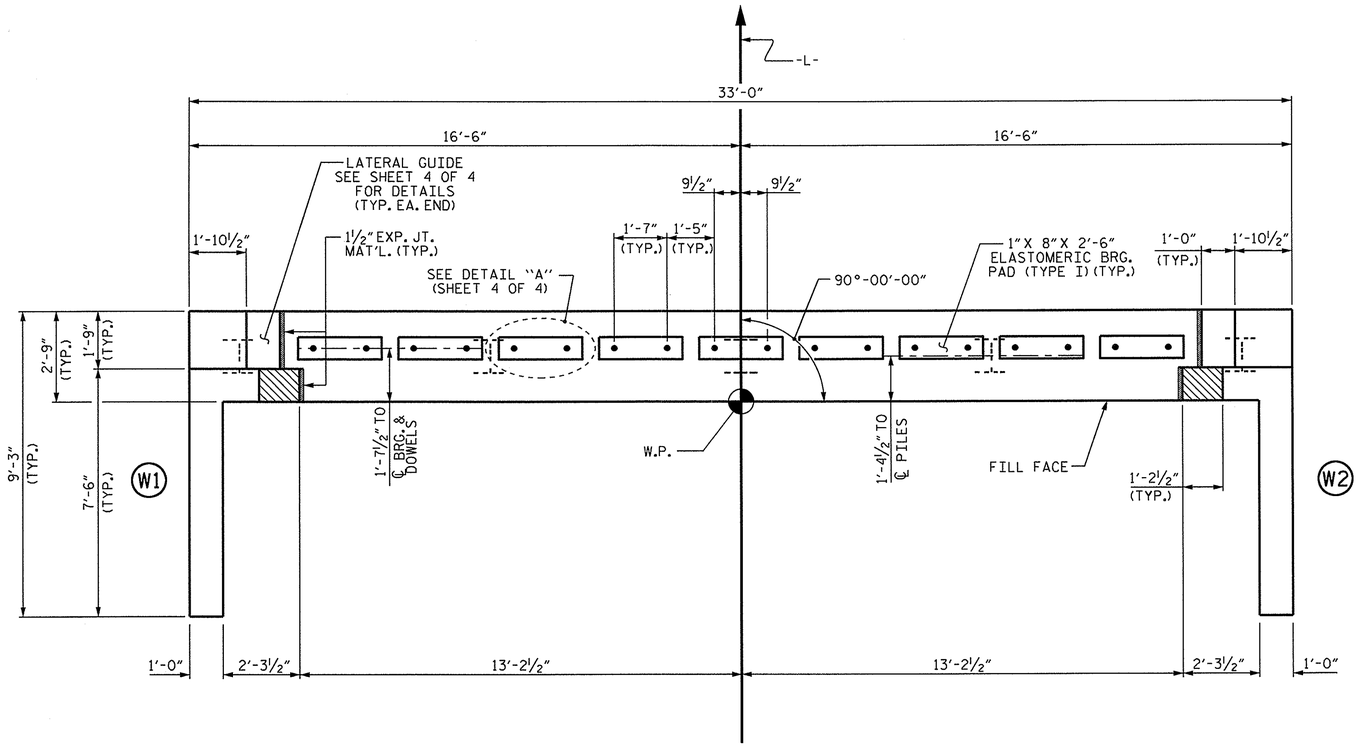


## PLAN

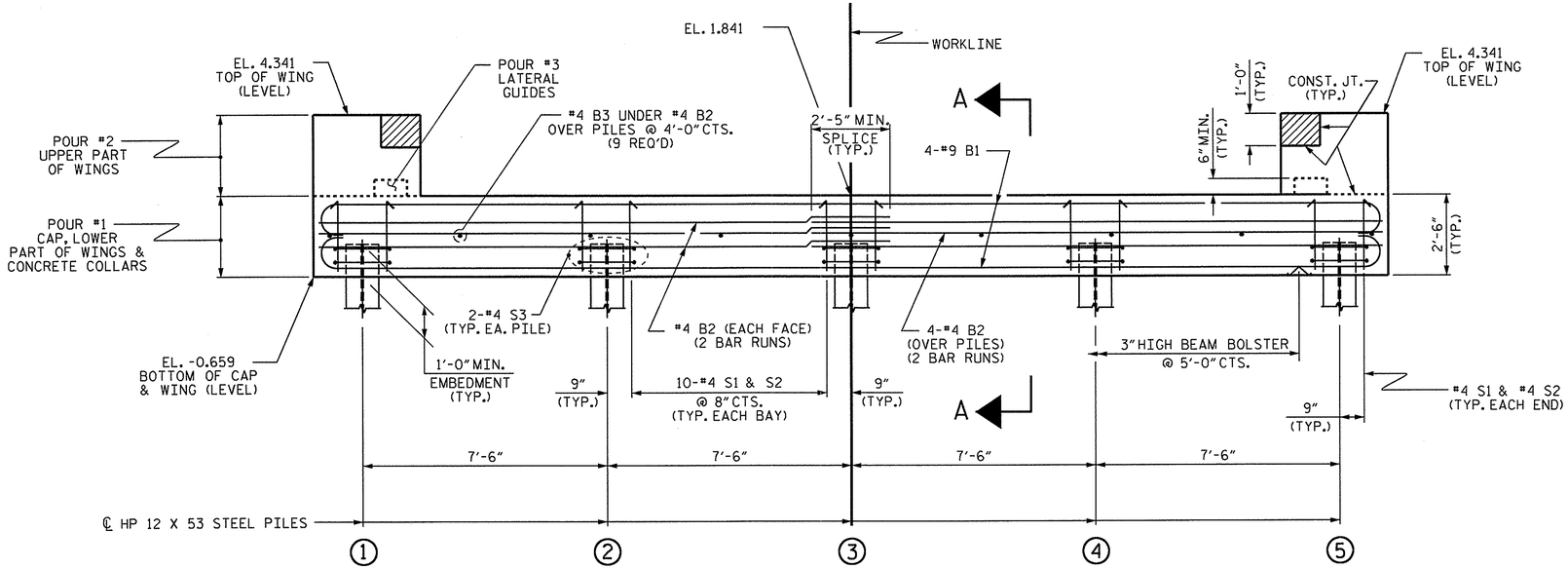


## ELEVATION

WINGS NOT SHOWN FOR CLARITY.
FOR SECTION A-A, SEE SHEET 4 OF 4.
CONCRETE COLLARS FOR STEEL PILES NOT SHOWN IN PLAN AND ELEVATION VIEWS FOR CLARITY.
SEE "CORROSION PROTECTION FOR STEEL PILES DETAIL", SHEET 4 OF 4.

## NOTES

STIRRUPS IN CAP MAY BE SHIFTED AS NECESSARY TO CLEAR DOWELS.

THE LATERAL GUIDES ARE NOT TO BE POURED UNTIL AFTER THE CORED SLAB UNITS ARE IN PLACE.

THE CONCRETE IN THE SHADED AREA OF THE WING SHALL BE POURED AFTER THE VERTICAL CONCRETE BARRIER RAIL IS CAST IF SLIP FORMING IS USED.

FOR PILE SPLICE DETAILS, SEE SHEET 4 OF 4.

FOR WING DETAILS, SEE SHEET 3 OF 4.

THE CONTRACTOR HAS THE OPTION TO OMIT THE LATERAL GUIDE IF APPROVED BY THE ENGINEER.

THE CONTRACTOR SHALL PROVIDE FOR INSTALLATION OF THE 4" DIAMETER DRAIN PIPE THROUGH THE WING WALL AS REQUIRED. FOR REINFORCED BRIDGE APPROACH FILL, SEE ROADWAY PLANS. REINFORCING STEEL IN THE WING WALL MAY BE SHIFTED AS NECESSARY TO CLEAR THE DRAIN PIPE.

PROJECT NO. 17BP.1.R.47
CHOWAN COUNTY
STATION: 12+28.50 -L-

SHEET 1 OF 4

STATE OF NORTH CAROLINA
DEPARTMENT OF TRANSPORTATION
RALEIGH

SUBSTRUCTURE

END BENT No. 1

NORTH CAROLINA PROFESSIONAL SEAL 22005 ENGINEER KEITH PASCHAL
8/9/12

| ASSEMBLED BY : E. K. POPE | DATE : 12-16-11 |
|---|---|
| CHECKED BY : A. K. PASCHAL | DATE : 1-19-12 |
| DRAWN BY : DGE 02/10 | |
| CHECKED BY : MKT 02/10 | |

| REVISIONS | | | | | | | | SHEET NO. |
|---|---|---|---|---|---|---|---|---|
| NO. | BY: | DATE: | NO. | BY: | DATE: | | | S-8 |
| 1 | | | 3 | | | | | TOTAL SHEETS |
| 2 | | | 4 | | | | | 13 |

09-AUG-2012 07:23
S:\DPG1\Keith\BD-5101K\BD5101K_SD_CS.dgn
kpaschal

STD. NO. EB_27_90S

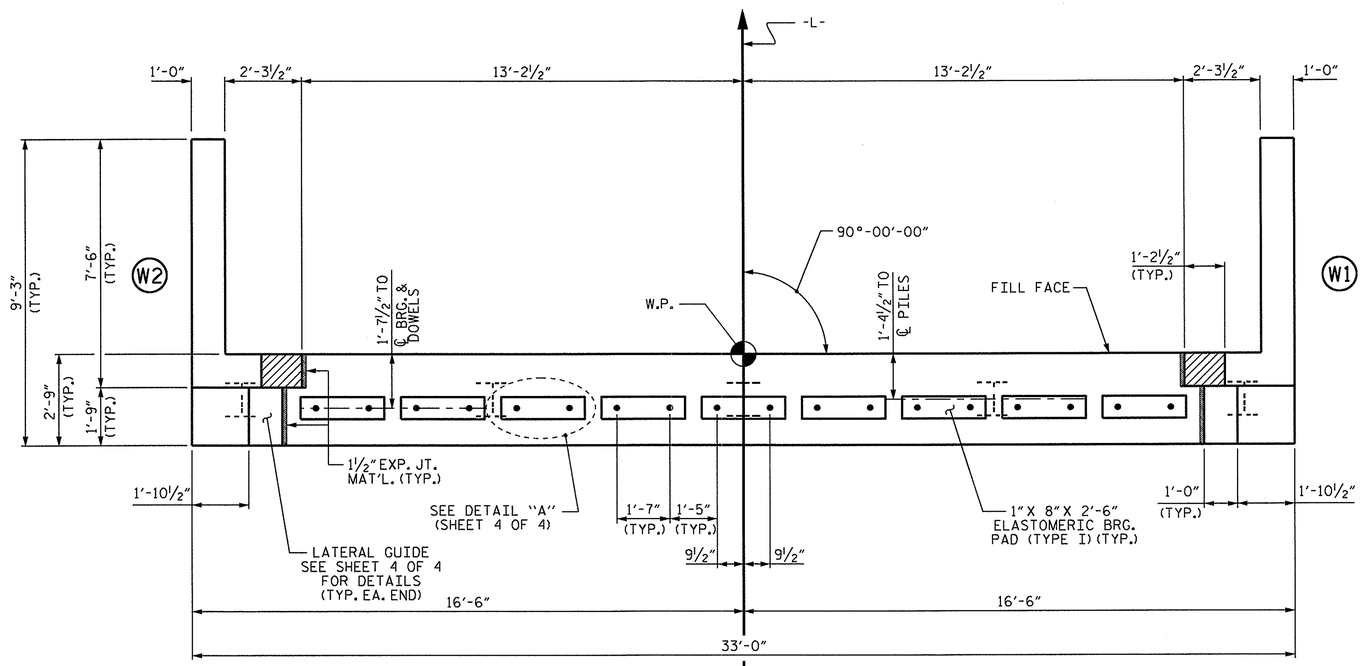


PLAN

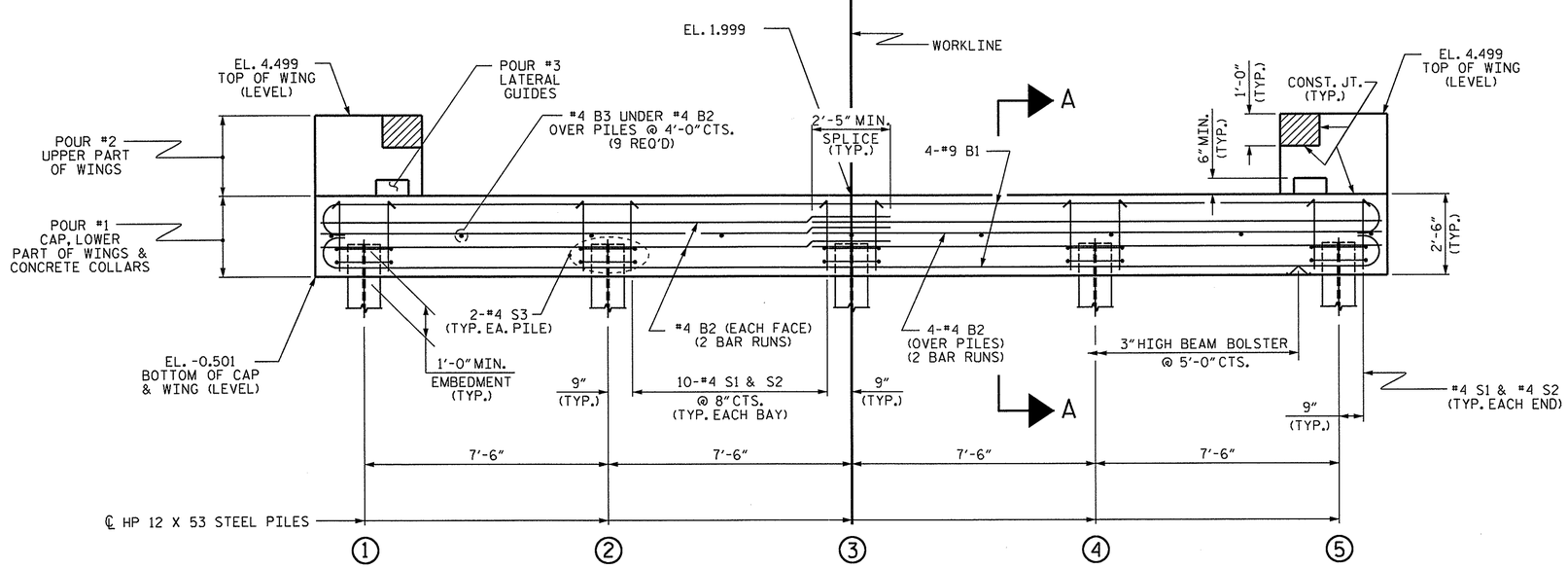


ELEVATION

WINGS NOT SHOWN FOR CLARITY.
FOR SECTION A-A, SEE SHEET 4 OF 4.
CONCRETE COLLARS FOR STEEL PILES NOT SHOWN IN PLAN AND ELEVATION VIEWS FOR CLARITY.
SEE "CORROSION PROTECTION FOR STEEL PILES DETAIL", SHEET 4 OF 4.

## NOTES

STIRRUPS IN CAP MAY BE SHIFTED AS NECESSARY TO CLEAR DOWELS.

THE LATERAL GUIDES ARE NOT TO BE POURED UNTIL AFTER THE CORED SLAB UNITS ARE IN PLACE.

THE CONCRETE IN THE SHADED AREA OF THE WING SHALL BE POURED AFTER THE VERTICAL CONCRETE BARRIER RAIL IS CAST IF SLIP FORMING IS USED.

FOR PILE SPLICE DETAILS, SEE SHEET 4 OF 4.

FOR WING DETAILS, SEE SHEET 3 OF 4.

THE CONTRACTOR HAS THE OPTION TO OMIT THE LATERAL GUIDE IF APPROVED BY THE ENGINEER.

THE CONTRACTOR SHALL PROVIDE FOR INSTALLATION OF THE 4" DIAMETER DRAIN PIPE THROUGH THE WING WALL AS REQUIRED. FOR REINFORCED BRIDGE APPROACH FILL, SEE ROADWAY PLANS. REINFORCING STEEL IN THE WING WALL MAY BE SHIFTED AS NECESSARY TO CLEAR THE DRAIN PIPE.

PROJECT NO. 17BP.1.R.47
CHOWAN COUNTY
STATION: 12+28.50 -L-

SHEET 2 OF 4

STATE OF NORTH CAROLINA
DEPARTMENT OF TRANSPORTATION
RALEIGH

SUBSTRUCTURE

END BENT No. 2

NORTH CAROLINA PROFESSIONAL SEAL 22005 ENGINEER A. KEITH PASCHAL
8/9/12

| REVISIONS | | | | | | | SHEET NO. |
|---|---|---|---|---|---|---|---|
| NO. | BY: | DATE: | NO. | BY: | DATE: | | S-9 |
| 1 | | | 3 | | | | TOTAL SHEETS |
| 2 | | | 4 | | | | 13 |

| | | | |
|---|---|---|---|
| ASSEMBLED BY : | E. K. POPE | DATE : | 12-16-11 |
| CHECKED BY : | A. K. PASCHAL | DATE : | 1-19-12 |
| DRAWN BY : | DGE | 02/10 | |
| CHECKED BY : | MKT | 02/10 | |

09-AUG-2012 07:23
S:\DPG1\Keith\BD-5101K\BD5101K_SD_CS.dgn
kpaschal

STD. NO. EB_27_90S

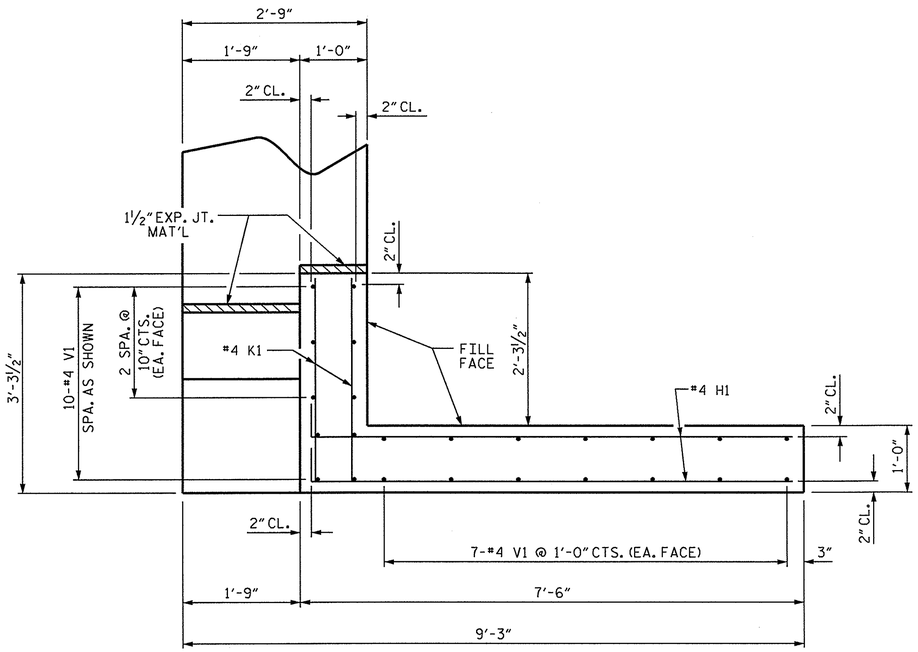


PLAN OF WING (W1)

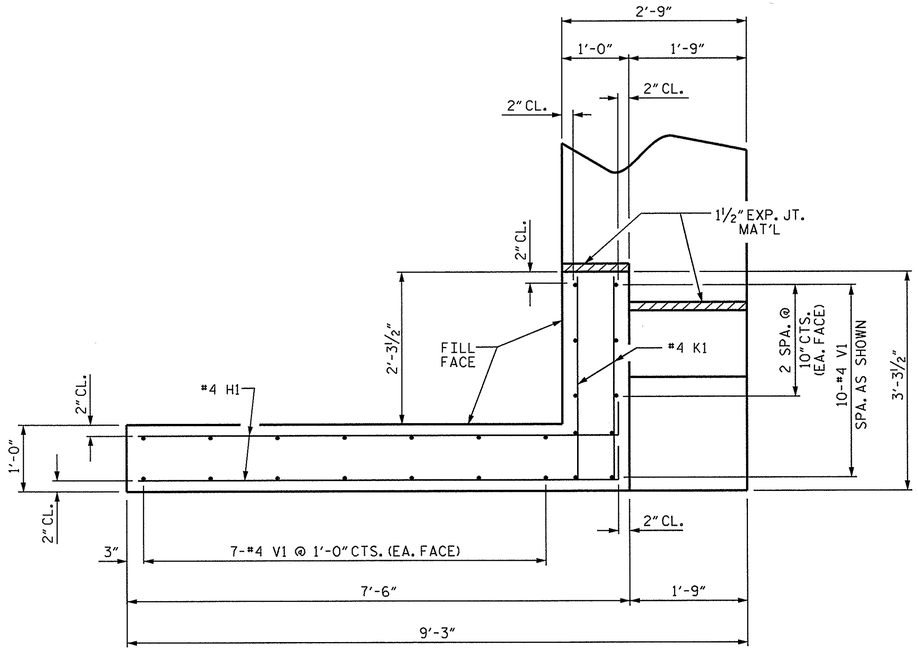


PLAN OF WING (W2)

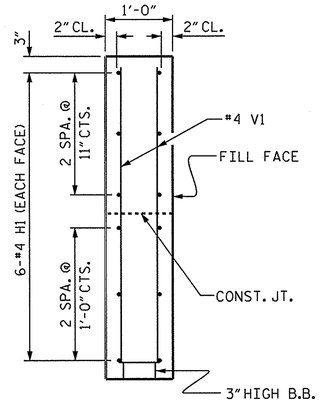


SECTION X-X

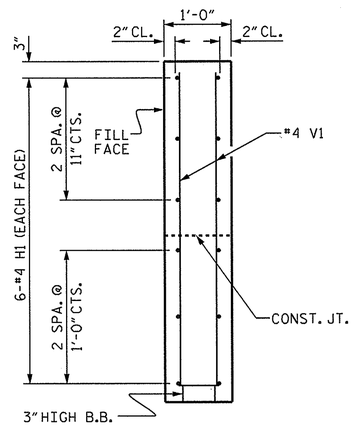


SECTION Y-Y

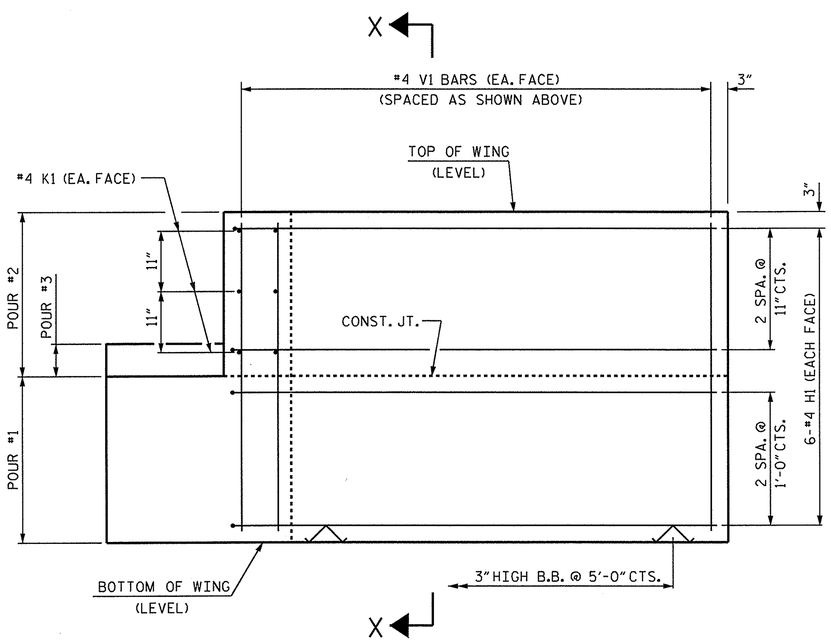


ELEVATION OF WING (W1)

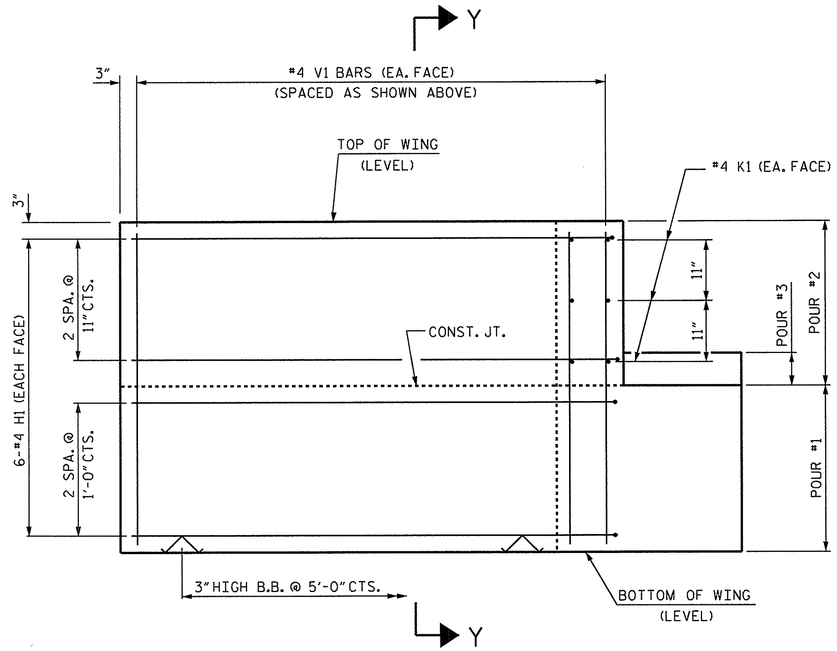


ELEVATION OF WING (W2)

WING DETAILS

PROJECT NO. 17BP.1.R.47

CHOWAN COUNTY

STATION: 12+28.50 -L-

SHEET 3 OF 4

STATE OF NORTH CAROLINA
DEPARTMENT OF TRANSPORTATION
RALEIGH

SUBSTRUCTURE

END BENT
WING DETAILS

NORTH CAROLINA PROFESSIONAL SEAL 22005 ENGINEER KEITH PASCHAL
8/9/12

| REVISIONS | | | | | | SHEET NO. |
|---|---|---|---|---|---|---|
| NO. | BY: | DATE: | NO. | BY: | DATE: | S-10 |
| 1 | | | 3 | | | TOTAL SHEETS |
| 2 | | | 4 | | | 13 |

| | |
|---|---|
| ASSEMBLED BY : E. K. POPE | DATE : 12-16-11 |
| CHECKED BY : A. K. PASCHAL | DATE : 1-19-12 |
| DRAWN BY : DGE 02/10 | |
| CHECKED BY : MKT 02/10 | |

09-AUG-2012 07:21
S:\DPG1\Keith\BD-5101K\BD5101K_SD_CS.dgn
kpaschal

STD. NO. EB_27_90S

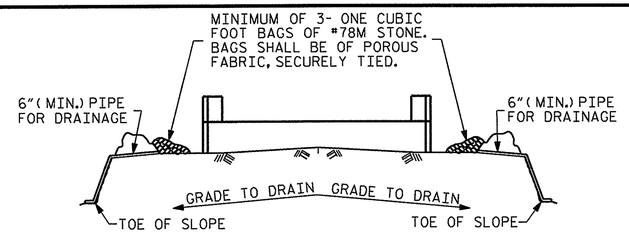


BAGGED STONE AND PIPE SHALL BE PLACED IMMEDIATELY AFTER COMPLETION OF END BENT EXCAVATION. PIPE MAY BE EITHER CONCRETE, CORRUGATED STEEL, CORRUGATED ALUMINUM ALLOY, OR CORRUGATED PLASTIC. PERFORATED PIPE WILL NOT BE ALLOWED.

BAGGED STONE SHALL REMAIN IN PLACE UNTIL THE ENGINEER DIRECTS THAT IT BE REMOVED. THE CONTRACTOR SHALL REMOVE AND DISPOSE OF SILT ACCUMULATIONS AT BAGGED STONE WHEN SO DIRECTED BY THE ENGINEER. BAGS SHALL BE REMOVED AND REPLACED WHENEVER THE ENGINEER DETERMINES THAT THEY HAVE DETERIORATED AND LOST THEIR EFFECTIVENESS.

NO SEPARATE PAYMENT WILL BE MADE FOR THIS WORK AND THE ENTIRE COST OF THIS WORK SHALL BE INCLUDED IN THE UNIT CONTRACT PRICE BID FOR THE SEVERAL PAY ITEMS.

## TEMPORARY DRAINAGE AT END BENT

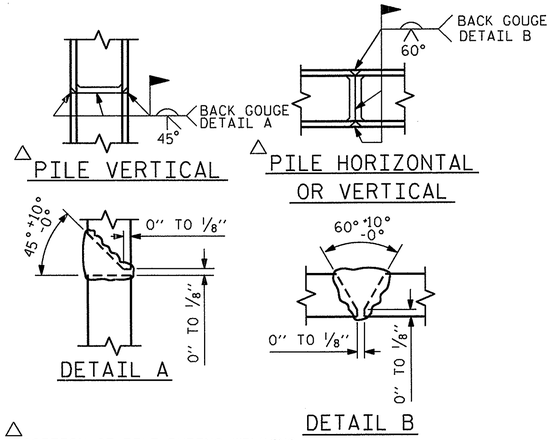


△ POSITION OF PILE DURING WELDING.

## PILE SPLICE DETAILS

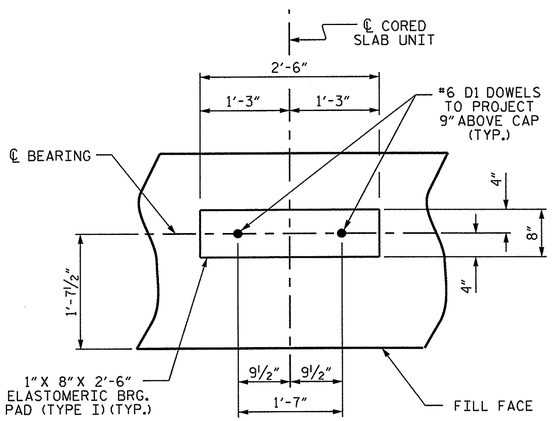


## DETAIL "A"

(END BENT No. 1 SHOWN, END BENT No. 2 SIMILAR BY ROTATION)

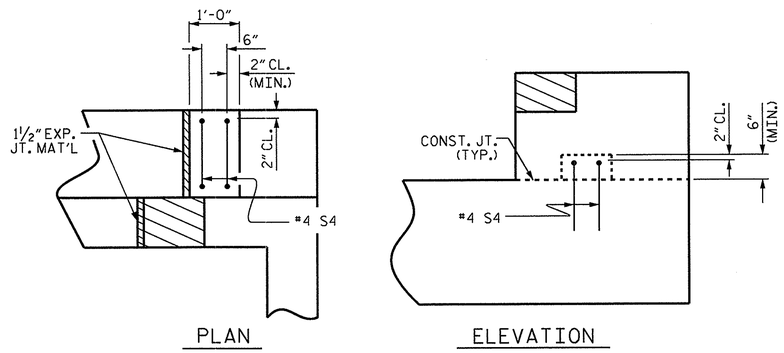


## LATERAL GUIDE DETAILS

(RIGHT LATERAL GUIDE SHOWN, LEFT END SIMILAR)

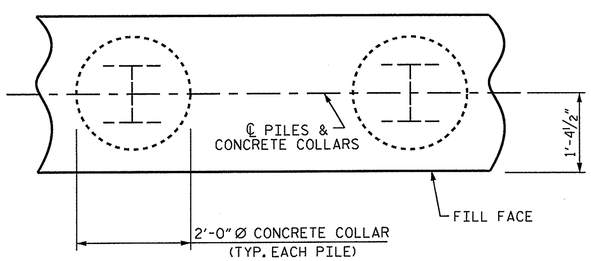


PLAN

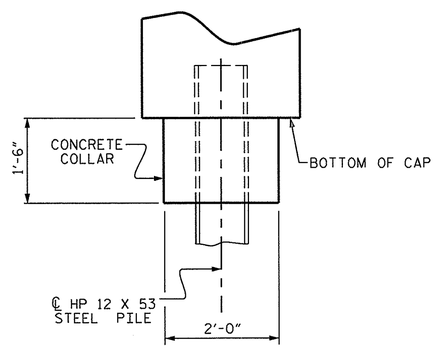


ELEVATION

## CORROSION PROTECTION FOR STEEL PILES DETAIL

(END BENT No. 1 SHOWN, END BENT No. 2 SIMILAR BY ROTATION)

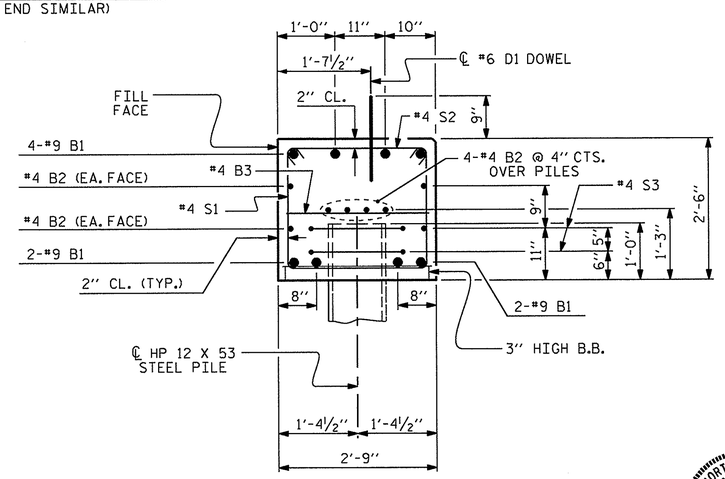


## SECTION A-A

(CONCRETE COLLAR NOT SHOWN FOR CLARITY. SEE "CORROSION PROTECTION FOR STEEL PILES DETAIL.")

## BAR TYPES

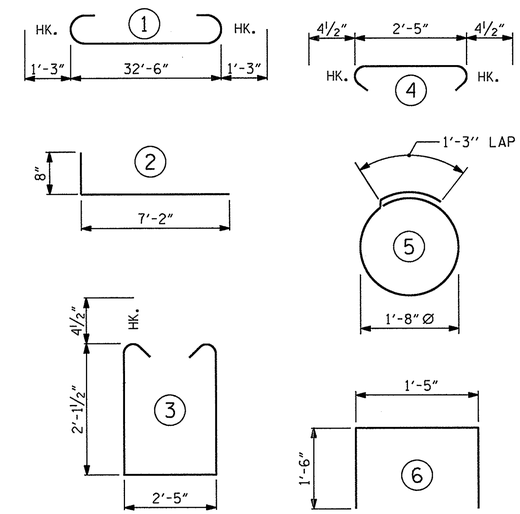


ALL BAR DIMENSIONS ARE OUT TO OUT.

| END BENT No. 1 | |
|---|---|
| HP 12 X 53 STEEL PILES | |
| NO: 5 | LIN. FT.= 275 |

| END BENT No. 2 | |
|---|---|
| HP 12 X 53 STEEL PILES | |
| NO: 5 | LIN. FT.= 275 |

## BILL OF MATERIAL FOR ONE END BENT

| BAR | NO. | SIZE | TYPE | LENGTH | WEIGHT |
|---|---|---|---|---|---|
| B1 | 8 | #9 | 1 | 35'-0" | 952 |
| B2 | 16 | #4 | STR | 17'-7" | 188 |
| B3 | 9 | #4 | STR | 2'-5" | 15 |
| D1 | 18 | #6 | STR | 1'-6" | 41 |
| H1 | 24 | #4 | 2 | 7'-10" | 126 |
| K1 | 12 | #4 | STR | 2'-11" | 23 |
| S1 | 42 | #4 | 3 | 7'-5" | 208 |
| S2 | 42 | #4 | 4 | 3'-2" | 89 |
| S3 | 10 | #4 | 5 | 6'-6" | 43 |
| S4 | 4 | #4 | 6 | 4'-5" | 12 |
| V1 | 48 | #4 | STR | 4'-8" | 150 |
| REINFORCING STEEL (FOR ONE END BENT) | | | | | 1847 LBS. |

| CLASS A CONCRETE BREAKDOWN (FOR ONE END BENT) | | |
|---|---|---|
| POUR #1 | CAP, LOWER PART OF WINGS & COLLARS | 10.5 C.Y. |
| POUR #2 | UPPER PART OF WINGS | 1.8 C.Y. |
| POUR #3 | LATERAL GUIDES | 0.1 C.Y. |
| TOTAL CLASS A CONCRETE | | 12.4 C.Y. |

| | |
|---|---|
| PDA TESTING (END BENT #1) | No. = 1 |
| PDA ASSISTANCE (END BENT #1) | No. = 1 |

PROJECT NO. 17BP.1.R.47
CHOWAN COUNTY
STATION: 12+28.50 -L-

SHEET 4 OF 4

STATE OF NORTH CAROLINA
DEPARTMENT OF TRANSPORTATION
RALEIGH

SUBSTRUCTURE

END BENT No. 1 & 2 DETAILS

NORTH CAROLINA PROFESSIONAL SEAL 22005 ENGINEER A. KEITH PASCHAL
8/9/12

| REVISIONS | | | | | | SHEET NO. |
|---|---|---|---|---|---|---|
| NO. | BY: | DATE: | NO. | BY: | DATE: | S-11 |
| 1 | | | 3 | | | TOTAL SHEETS |
| 2 | | | 4 | | | 13 |

| | | | |
|---|---|---|---|
| ASSEMBLED BY : E. K. POPE | | DATE : 12-16-11 | |
| CHECKED BY : A. K. PASCHAL | | DATE : 1-19-12 | |
| DRAWN BY : DGE | 02/10 | | |
| CHECKED BY : MKT | 02/10 | | |

09-AUG-2012 07:21
S:\DPG1\Kelth\BD-5101K\BD5101K_SD_CS.dgn
kpaschal

STD. NO. EB_27_90S

NOTES :

FOR BERM WIDTH DIMENSIONS, SEE GENERAL DRAWING.

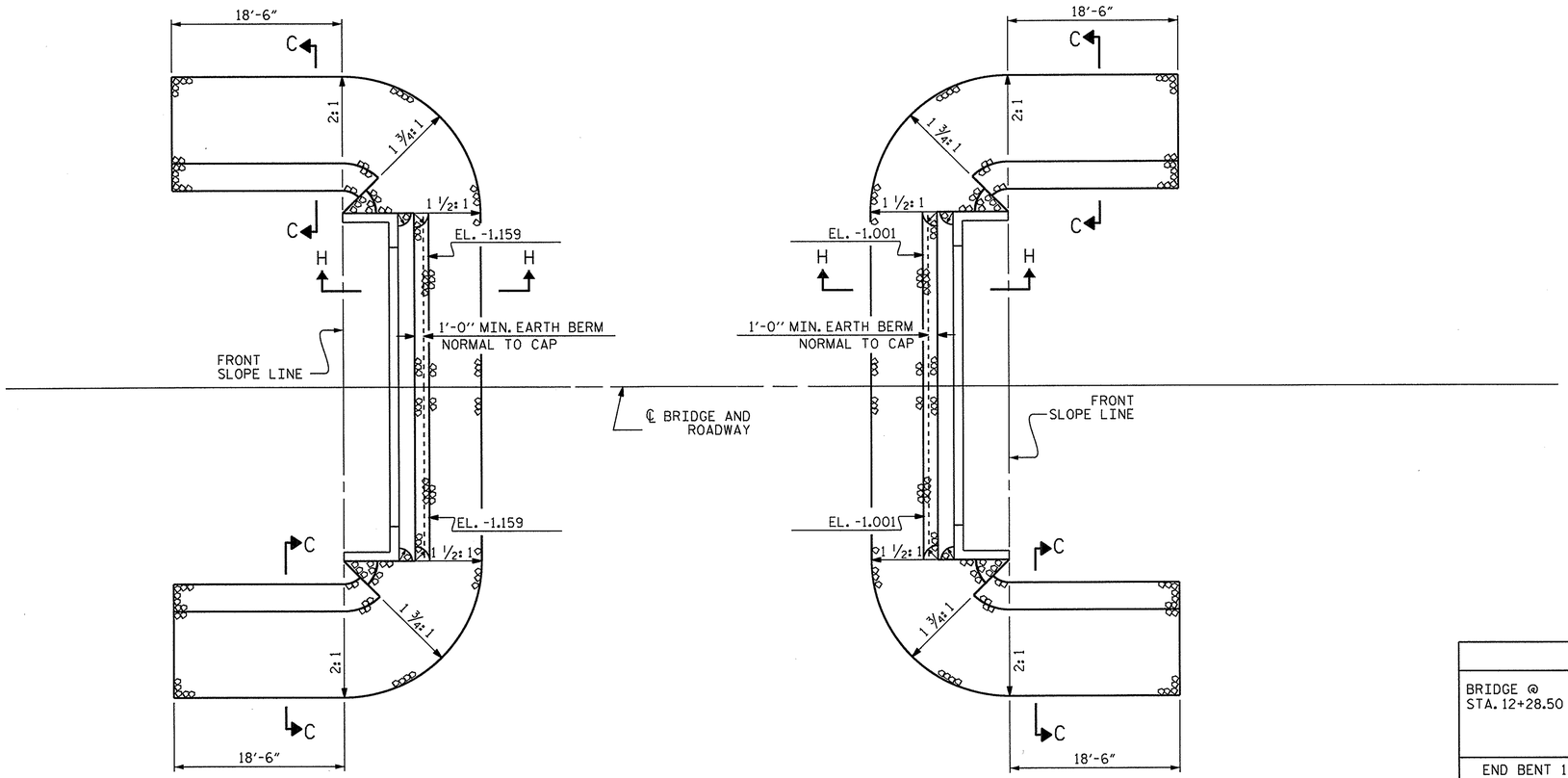


END BENT 1

END BENT 2

PLAN OF RIP RAP

| ESTIMATED QUANTITIES | | |
|---|---|---|
| BRIDGE @ STA. 12+28.50 -L- | RIP RAP CLASS II (2'-0" THICK) | GEOTEXTILE FOR DRAINAGE |
| | TONS | SQUARE YARDS |
| END BENT 1 | 108 | 120 |
| END BENT 2 | 110 | 122 |

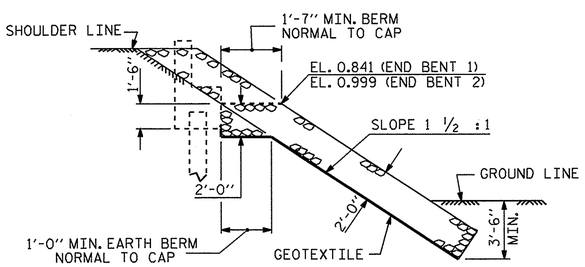


SECTION H-H

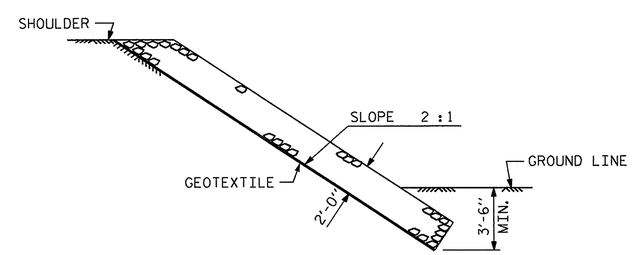


SECTION C-C

PROJECT NO. 17BP.1.R.47

CHOWAN COUNTY

STATION: 12+28.50 -L-

STATE OF NORTH CAROLINA
DEPARTMENT OF TRANSPORTATION
RALEIGH

STANDARD

RIP RAP DETAILS

NORTH CAROLINA PROFESSIONAL SEAL 22005 ENGINEER A. KEITH PASCHAL

8/9/12

| REVISIONS | | | | | | | | SHEET NO. |
|---|---|---|---|---|---|---|---|---|
| NO. | BY: | DATE: | NO. | BY: | DATE: | | | S-12 |
| 1 | | | 3 | | | | | TOTAL SHEETS |
| 2 | | | 4 | | | | | 13 |

| | | | |
|---|---|---|---|
| ASSEMBLED BY : E. K. POPE | | DATE : 12-16-11 | |
| CHECKED BY : A. K. PASCHAL | | DATE : 1-19-12 | |
| DRAWN BY : REK 1/84 | REV. 10/17/00 | RWW/LES | |
| CHECKED BY : RDU 1/84 | REV. 5/1/06R | TLA/GM | |
| | REV. 10/1/11 | MAA/GM | |

09-AUG-2012 07:20
S:\DPGI\Keith\BD-5101K\BD5101K_SD_CS.dgn
kpaschal

STD. NO. RR1 (Sht 2)

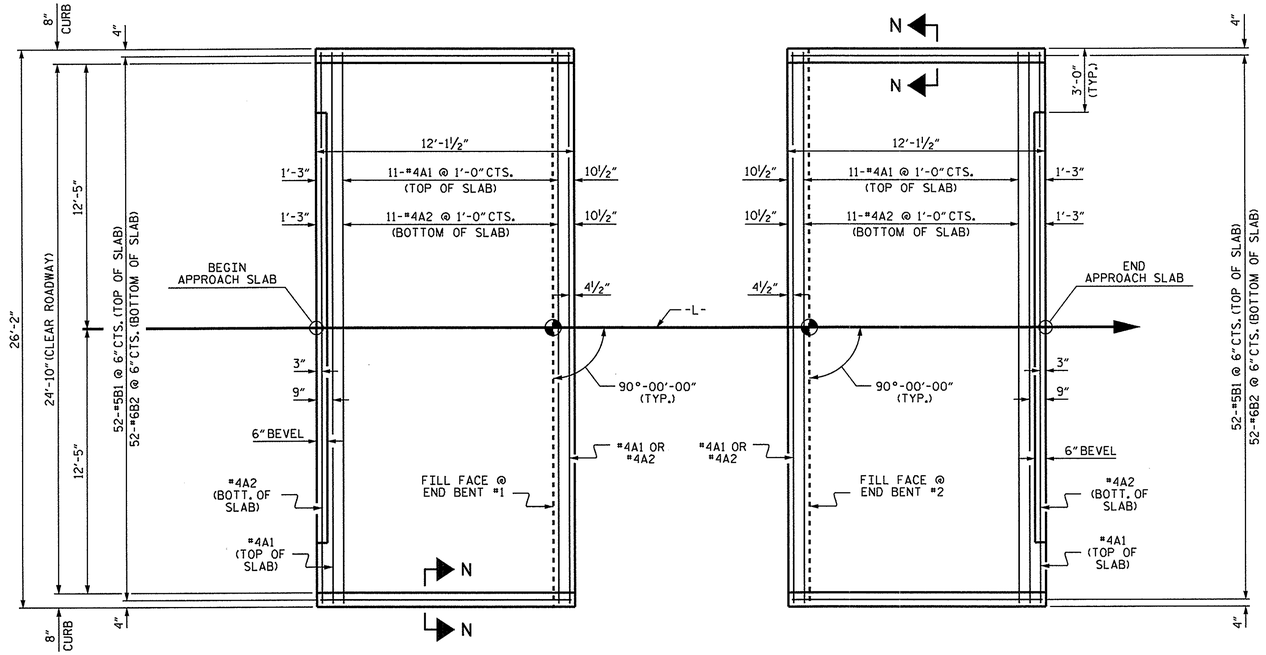


PLAN @ END BENT #1 PLAN @ END BENT #2

DIMENSIONS SHOWN ARE TYPICAL FOR BOTH APPROACH SLABS

## NOTES

FOR REINFORCED BRIDGE APPROACH FILL INCLUDING GEOTEXTILE, IMPERMEABLE GEOMEMBRANE, 4" Ø DRAINAGE PIPE, #78M STONE, AND SELECT MATERIAL, SEE ROADWAY PLANS.

AREA BETWEEN THE WINGWALL AND APPROACH SLAB SHALL BE GRADED TO DRAIN THE WATER AWAY FROM THE FILL FACE OF THE BRIDGE AND SHALL BE PAVED. SEE ROADWAY PLANS.

APPROACH SLAB GROOVING IS NOT REQUIRED.

## BILL OF MATERIAL

### APPROACH SLAB AT EB #1

| BAR | NO. | SIZE | TYPE | LENGTH | WEIGHT |
|---|---|---|---|---|---|
| * A1 | 13 | #4 | STR | 25'-10" | 224 |
| A2 | 13 | #4 | STR | 25'-10" | 224 |
| * B1 | 52 | #5 | STR | 11'-2" | 606 |
| B2 | 52 | #6 | STR | 11'-8" | 911 |
| REINFORCING STEEL | | | | LBS. | 1135 |
| * EPOXY COATED REINFORCING STEEL | | | | LBS. | 830 |
| CLASS AA CONCRETE | | | | C. Y. | 15.2 |

### APPROACH SLAB AT EB #2

| BAR | NO. | SIZE | TYPE | LENGTH | WEIGHT |
|---|---|---|---|---|---|
| * A1 | 13 | #4 | STR | 25'-10" | 224 |
| A2 | 13 | #4 | STR | 25'-10" | 224 |
| * B1 | 52 | #5 | STR | 11'-2" | 606 |
| B2 | 52 | #6 | STR | 11'-8" | 911 |
| REINFORCING STEEL | | | | LBS. | 1135 |
| * EPOXY COATED REINFORCING STEEL | | | | LBS. | 830 |
| CLASS AA CONCRETE | | | | C. Y. | 15.2 |

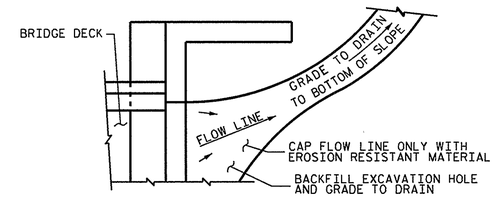


NOTE: IF THE APPROACH SLAB IS NOT CONSTRUCTED IMMEDIATELY AFTER THE BACKFILLING OF THE END BENT EXCAVATION, GRADE TO DRAIN TO THE BOTTOM OF THE SLOPE AND PROVIDE EROSION RESISTANT MATERIAL, SUCH AS FIBERGLASS ROVING OR AS DIRECTED BY THE ENGINEER TO PREVENT SOIL EROSION AND TO PROTECT THE AREA ADJACENT TO THE STRUCTURE. THE CONTRACTOR WILL BE REQUIRED TO REMOVE THESE MATERIALS PRIOR TO CONSTRUCTION OF THE APPROACH SLAB.

TEMPORARY DRAINAGE DETAIL

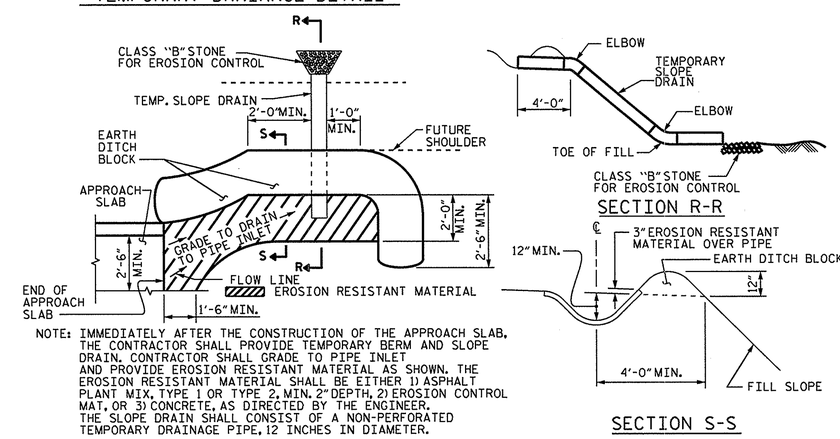


NOTE: IMMEDIATELY AFTER THE CONSTRUCTION OF THE APPROACH SLAB, THE CONTRACTOR SHALL PROVIDE TEMPORARY BERM AND SLOPE DRAIN. CONTRACTOR SHALL GRADE TO PIPE INLET AND PROVIDE EROSION RESISTANT MATERIAL AS SHOWN. THE EROSION RESISTANT MATERIAL SHALL BE EITHER 1) ASPHALT PLANT MIX, TYPE 1 OR TYPE 2, MIN. 2" DEPTH, 2) EROSION CONTROL MAT, OR 3) CONCRETE, AS DIRECTED BY THE ENGINEER. THE SLOPE DRAIN SHALL CONSIST OF A NON-PERFORATED TEMPORARY DRAINAGE PIPE, 12 INCHES IN DIAMETER.

PLAN VIEW

TEMPORARY BERM AND SLOPE DRAIN DETAILS

(TO BE USED WHEN SHOULDER BERM GUTTER IS REQUIRED)

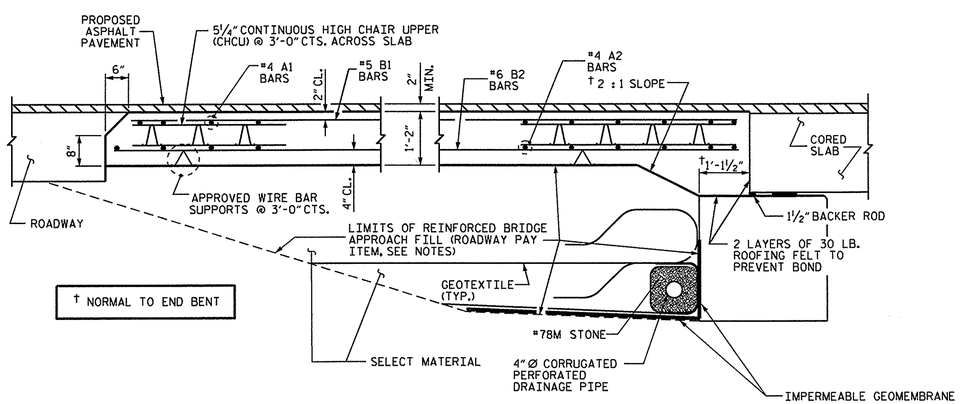


† NORMAL TO END BENT

SECTION THRU SLAB

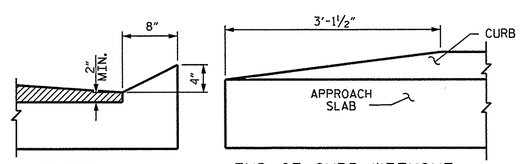


SECTION N-N END OF CURB WITHOUT SHOULDER BERM GUTTER

CURB DETAILS

| SPLICE LENGTHS | | |
|---|---|---|
| BAR SIZE | EPOXY COATED | UNCOATED |
| #4 | 2'-0" | 1'-9" |
| #5 | 2'-6" | 2'-2" |
| #6 | 3'-10" | 2'-7" |

BRIDGE NO. 17BP.1.R.47

CHOWAN COUNTY

STATION: 12+28.50 -L-

STATE OF NORTH CAROLINA
DEPARTMENT OF TRANSPORTATION
RALEIGH

STANDARD
BRIDGE APPROACH SLAB
FOR PRESTRESSED CONCRETE
CORED SLAB UNIT
(SUB-REGIONAL TIER)
90° SKEW

NORTH CAROLINA PROFESSIONAL SEAL 22005 ENGINEER KEITH PASCHAL
8/9/12

| REVISIONS | | | | | | SHEET NO. |
|---|---|---|---|---|---|---|
| NO. | BY: | DATE: | NO. | BY: | DATE: | S-13 |
| 1 | | | 3 | | | TOTAL SHEETS |
| 2 | | | 4 | | | 13 |

| | |
|---|---|
| ASSEMBLED BY : E. K. POPE | DATE : 12-16-11 |
| CHECKED BY : A. K. PASCHAL | DATE : 1-19-12 |
| DRAWN BY : SHS/MAA 5-09 | REV. 12-11 MAA/AAC |
| CHECKED BY : BCH 5-09 | |

09-AUG-2012 07:18
S:\DPG1\Keith\BD-5101K\BD5101K_SD_CS.dgn
kpaschal

STD. NO. BAS_27_90S

# STANDARD NOTES

## DESIGN DATA:

| | |
|---|---|
| SPECIFICATIONS | A.A.S.H.T.O. (CURRENT) |
| LIVE LOAD | SEE PLANS |
| IMPACT ALLOWANCE | SEE A.A.S.H.T.O. |
| STRESS IN EXTREME FIBER OF | |
| STRUCTURAL STEEL - AASHTO M270 GRADE 36 | 20,000 LBS. PER SQ. IN. |
| - AASHTO M270 GRADE 50W | 27,000 LBS. PER SQ. IN. |
| - AASHTO M270 GRADE 50 | 27,000 LBS. PER SQ. IN. |
| REINFORCING STEEL IN TENSION | |
| GRADE 60 | 24,000 LBS. PER SQ. IN. |
| CONCRETE IN COMPRESSION | 1,200 LBS. PER SQ. IN. |
| CONCRETE IN SHEAR | SEE A.A.S.H.T.O. |
| STRUCTURAL TIMBER - TREATED OR | |
| UNTREATED - EXTREME FIBER STRESS | 1,800 LBS. PER SQ. IN. |
| COMPRESSION PERPENDICULAR TO GRAIN OF TIMBER | 375 LBS. PER SQ. IN. |
| EQUIVALENT FLUID PRESSURE OF EARTH | 30 LBS. PER CU. FT. (MINIMUM) |

## MATERIAL AND WORKMANSHIP:

EXCEPT AS MAY OTHERWISE BE SPECIFIED ON PLANS OR IN THE SPECIAL PROVISIONS, ALL MATERIAL AND WORKMANSHIP SHALL BE IN ACCORDANCE WITH THE 2012 "STANDARD SPECIFICATIONS FOR ROADS AND STRUCTURES" OF THE N. C. DEPARTMENT OF TRANSPORTATION.

STEEL SHEET PILING FOR PERMANENT OR TEMPORARY APPLICATIONS SHALL BE HOT ROLLED.

## CONCRETE:

UNLESS OTHERWISE REQUIRED ON PLANS, CLASS A CONCRETE SHALL BE USED FOR ALL PORTIONS OF ALL STRUCTURES WITH THE EXCEPTION THAT: CLASS AA CONCRETE SHALL BE USED IN BRIDGE SUPERSTRUCTURES, ABUTMENT BACKWALLS, AND APPROACH SLABS; AND CLASS B CONCRETE SHALL BE USED FOR SLOPE PROTECTION AND RIP RAP.

## CONCRETE CHAMFERS:

UNLESS OTHERWISE NOTED ON THE PLANS, ALL EXPOSED CORNERS ON STRUCTURES SHALL BE CHAMFERED 3/4" WITH THE FOLLOWING EXCEPTIONS: TOP CORNERS OF CURBS MAY BE ROUNDED TO 1-1/2" RADIUS WHICH IS BUILT INTO CURB FORMS; CORNERS OF TRANSVERSE FLOOR EXPANSION JOINTS SHALL BE ROUNDED WITH A 1/4" FINISHING TOOL UNLESS OTHERWISE REQUIRED ON PLANS; AND CORNERS OF EXPANSION JOINTS IN THE ROADWAY FACES AND TOPS OF CURBS AND SIDEWALKS SHALL BE ROUNDED TO A 1/4" RADIUS WITH A FINISHING STONE OR TOOL UNLESS OTHERWISE REQUIRED ON PLANS.

## DOWELS:

DOWELS WHEN INDICATED ON PLANS AS FOR CULVERT EXTENSIONS, SHALL BE EMBEDDED AT LEAST 12" INTO THE OLD CONCRETE AND GROUTED INTO PLACE WITH 1:2 CEMENT MORTAR.

## ALLOWANCE FOR DEAD LOAD DEFLECTION, SETTLEMENT, ETC. IN CASTING SUPERSTRUCTURES:

BRIDGES SHALL BE BUILT ON THE GRADE OR VERTICAL CURVE SHOWN ON PLANS. SLABS, CURBS AND PARAPETS SHALL CONFORM TO THE GRADE OR CURVE.

ALL DIMENSIONS WHICH ARE GIVEN IN SECTION AND ARE AFFECTED BY DEAD LOAD DEFLECTIONS ARE DIMENSIONS AT CENTER LINE OF BEARING UNLESS OTHERWISE NOTED ON PLANS. IN SETTING FORMS FOR STEEL BEAM BRIDGES AND PRESTRESSED CONCRETE GIRDER BRIDGES, ADJUSTMENTS SHALL BE MADE DUE TO THE DEAD LOAD DEFLECTIONS FOR THE ELEVATIONS SHOWN. WHERE BLOCKS ARE SHOWN OVER BEAMS FOR BUILDING UP TO THE SLAB, THE VERTICAL DIMENSIONS OF THE BLOCKS SHALL BE ADJUSTED BETWEEN BEARINGS TO COMPENSATE FOR DEAD LOAD DEFLECTIONS, VERTICAL CURVE ORDINATE, AND ACTUAL BEAM CAMBER. WHERE BOTTOM OF SLAB IS IN LINE WITH BOTTOM OF TOP FLANGES, DEPTH OF SLAB BETWEEN BEARINGS SHALL BE ADJUSTED TO COMPENSATE FOR DEAD LOAD DEFLECTION, VERTICAL CURVE ORDINATE, AND ACTUAL BEAM CAMBER.

IN SETTING FALSEWORK AND FORMS FOR REINFORCED CONCRETE SPANS, AN ALLOWANCE SHALL BE MADE FOR DEAD LOAD DEFLECTIONS, SETTLEMENT OF FALSEWORK, AND PERMANENT CAMBER WHICH SHALL BE PROVIDED FOR IN ADDITION TO THE ELEVATIONS SHOWN. AFTER REMOVAL OF THE FALSEWORK, THE FINISHED STRUCTURES SHALL CONFORM TO THE PROFILE AND ELEVATIONS SHOWN ON THE PLANS AND CONSTRUCTION ELEVATIONS FURNISHED BY THE ENGINEER.

DETAILED DRAWINGS FOR FALSEWORK OR FORMS FOR BRIDGE SUPERSTRUCTURE AND ANY STRUCTURE OR PARTS OF A STRUCTURE AS NOTED ON THE PLANS SHALL BE SUBMITTED TO THE ENGINEER FOR APPROVAL BEFORE CONSTRUCTION OF THE FALSEWORK OR FORMS IS STARTED.

## REINFORCING STEEL:

ALL REINFORCING STEEL SHALL BE DEFORMED. DIMENSIONS RELATIVE TO PLACEMENT OF REINFORCING ARE TO CENTERS OF BARS UNLESS OTHERWISE INDICATED IN THE PLANS. DIMENSIONS ON BAR DETAILS ARE TO CENTERS OF BARS OR ARE OUT TO OUT AS INDICATED ON PLANS.

WIRE BAR SUPPORTS SHALL BE PROVIDED FOR REINFORCING STEEL WHERE INDICATED ON THE PLANS. WHEN BAR SUPPORT PIECES ARE PLACED IN CONTINUOUS LINES, THEY SHALL BE SO PLACED THAT THE ENDS OF THE SUPPORTING WIRES SHALL BE LAPPED TO LOCK LEGS ON ADJOINING PIECES.

## STRUCTURAL STEEL:

AT THE CONTRACTOR'S OPTION, HE MAY SUBSTITUTE 7/8" Ø SHEAR STUDS FOR THE ¾" Ø STUDS SPECIFIED ON THE PLANS. THIS SUBSTITUTION SHALL BE MADE AT THE RATE OF 3 - 7/8" Ø STUDS FOR 4 - 3/4" Ø STUDS, AND STUD SPACING CHANGES SHALL BE MADE AS NECESSARY TO PROVIDE THE SAME EQUIVALENT NUMBER OF 7/8" Ø STUDS ALONG THE BEAM AS SHOWN FOR 3/4" Ø STUDS BASED ON THE RATIO OF 3 - 7/8" Ø STUDS FOR 4 - 3/4" Ø STUDS. STUDS OF THE LENGTH SPECIFIED ON THE PLANS MUST BE PROVIDED. THE MAXIMUM SPACING SHALL BE 2'-0".

EXCEPT AT THE INTERIOR SUPPORTS OF CONTINUOUS BEAMS WHERE THE COVER PLATE IS IN CONTACT WITH BEARING PLATE, THE CONTRACTOR MAY, AT HIS OPTION, SUBSTITUTE FOR THE COVER PLATES DESIGNATED ON THE PLANS COVER PLATES OF THE EQUIVALENT AREA PROVIDED THESE PLATES ARE AT LEAST 5/16" IN THICKNESS AND DO NOT EXCEED A WIDTH EQUAL TO THE FLANGE WIDTH LESS 2" OR A THICKNESS EQUAL TO 2 TIMES THE FLANGE THICKNESS. THE SIZE OF FILLET WELDS SHALL CONFORM TO THE REQUIREMENTS OF THE CURRENT ANSI/AASHTO/AWS "BRIDGE WELDING CODE". ELECTROSLAG WELDING WILL NOT BE PERMITTED.

WITH THE SOLE EXCEPTION OF EDGES AT SURFACES WHICH BEAR ON OTHER SURFACES, ALL SHARP EDGES AND ENDS OF SHAPES AND PLATES SHALL BE SLIGHTLY ROUNDED BY SUITABLE MEANS TO A RADIUS OF APPROXIMATELY 1/16 INCH OR EQUIVALENT FLAT SURFACE AT A SUITABLE ANGLE PRIOR TO PAINTING, GALVANIZING, OR METALLIZING.

## HANDRAILS AND POSTS:

METAL STANDARDS AND FACES OF THE CONCRETE END POSTS FOR THE METAL RAIL SHALL BE SET NORMAL TO THE GRADE OF THE CURB, UNLESS OTHERWISE SHOWN ON PLANS. THE METAL RAIL AND TOPS OF CONCRETE POSTS USED WITH THE ALUMINUM RAIL SHALL BE BUILT PARALLEL TO THE GRADE OF THE CURB.

METAL HANDRAILS SHALL BE IN ACCORDANCE WITH THE PLANS. RAILS SHALL BE AS MANUFACTURED FOR BRIDGE RAILING. CASTINGS SHALL BE OF A UNIFORM APPEARANCE. FINS AND OTHER DEFORMATIONS RESULTING FROM CASTING OR OTHERWISE SHALL BE REMOVED IN A MANNER SO THAT A UNIFORM COLORING OF THE COMPLETED CASTING SHALL BE OBTAINED. CASTINGS WITH DISCOLORATIONS OR OF NON-UNIFORM COLORING WILL NOT BE ACCEPTED. CERTIFIED MILL REPORTS ARE REQUIRED FOR METAL RAILS AND POSTS.

## SPECIAL NOTES:

GENERALLY, IN CASE OF DISCREPANCY, THIS STANDARD SHEET OF NOTES SHALL GOVERN OVER THE SPECIFICATIONS, BUT THE REMAINDER OF THE PLANS SHALL GOVERN OVER NOTES HEREON, AND SPECIAL PROVISIONS SHALL GOVERN OVER ALL. SEE SPECIFICATIONS ARTICLE 105-4.

ENGLISH

JANUARY, 1990