DocuSign Envelope ID: 9D92F53E-F3F9-464B-8648-0BDE578DE24C

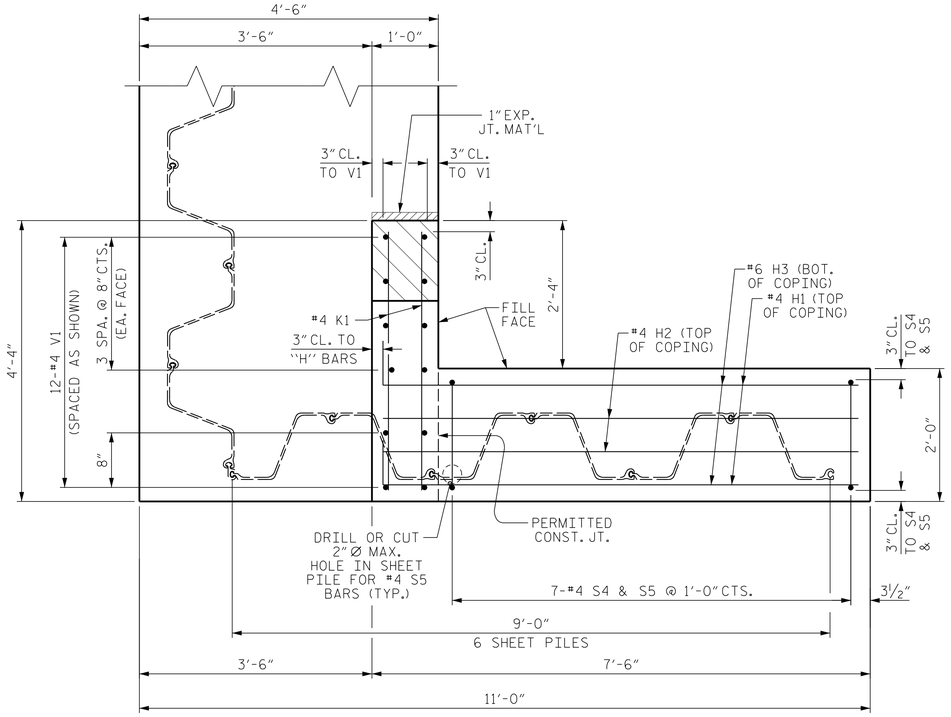

PLAN OF COPING-WING (W1)

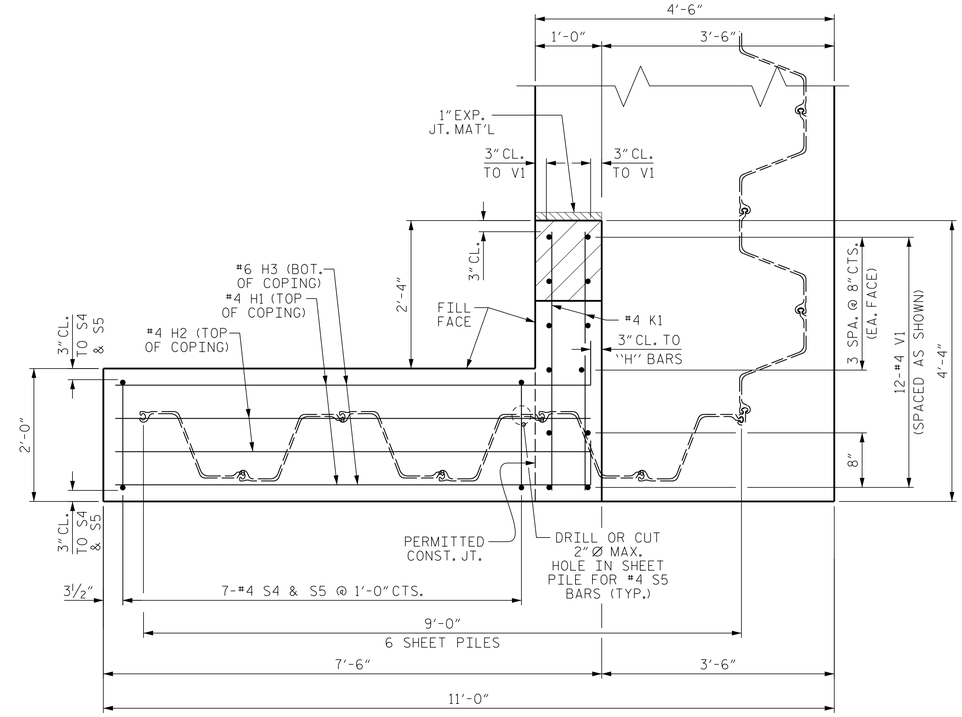

PLAN OF COPING-WING (W2)

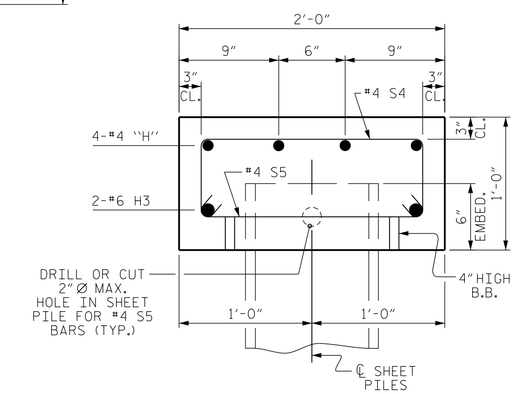

SECTION THROUGH COPING

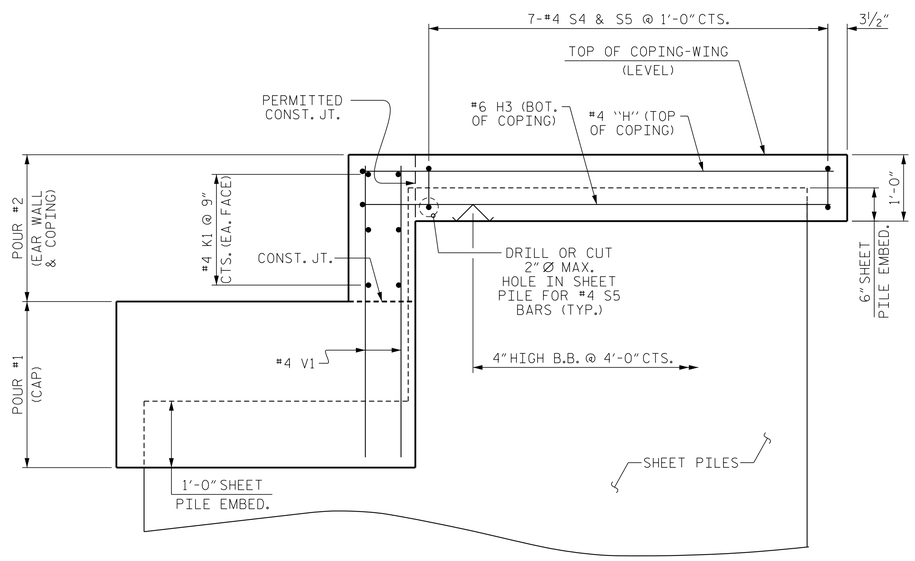

ELEVATION OF COPING-WING (W1)

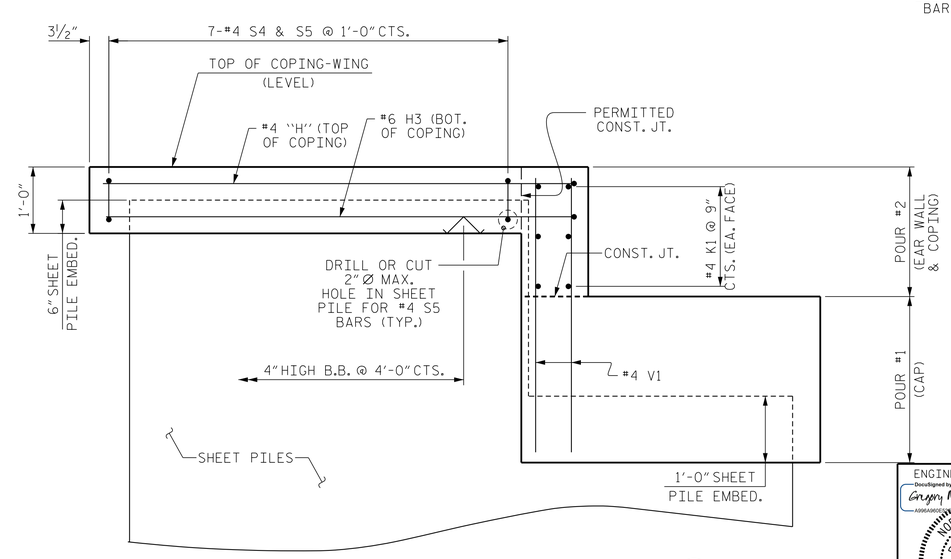

ELEVATION OF COPING-WING (W2)

PROJECT NO. 17BP.1.R.82

HYDE COUNTY

STATION: 13+23.50 -L-

SHEET 3 OF 4

ENGINEER OF RECORD:
Gregory M. Gilland
NORTH CAROLINA PROFESSIONAL SEAL 37400 ENGINEER GREGORY M. GILLAND
8/11/2017

WETHERILL ENGINEERING
1223 Jones Franklin Rd.
Raleigh, N.C. 27606
Bus: 919 851 8077
Fax: 919 851 8107
LICENSE NO. F-0377

STATE OF NORTH CAROLINA
DEPARTMENT OF TRANSPORTATION
RALEIGH

SUBSTRUCTURE

END BENT WING DETAILS

REVISIONS						SHEET NO.
NO.	BY:	DATE:	NO.	BY:	DATE:	S-13
1			3			TOTAL SHEETS
2			4			17

DRAWN BY : G.M. GILLAND DATE : 2-27-17
CHECKED BY : D. HODGE DATE : 3-17

DOCUMENT NOT CONSIDERED FINAL UNLESS ALL SIGNATURES COMPLETED

P:\2017\17116.01_Hyde-14\Structures\DGN\Hyde14_EB_WE1.dgn
8/10/2017 3:21:21 PM