DocuSign Envelope ID: AFA88402-C017-432F-8802-B9A29E6F43C9

8/17/99

P A V E M E N T S C H E D U L E

C1	PROP. APPROX. 3″ ASPHALT CONCRETE SURFACE COURSE, TYPE SF9.5A, AT AN AVERAGE RATE OF 165 LBS. PER SQ. YD. IN EACH OF TWO LAYERS.
C2	PROP. VAR. DEPTH ASPHALT CONCRETE SURFACE COURSE, TYPE SF9.5A, AT AN AVERAGE RATE OF 110 LBS. PER SQ. YD. PER 1″ DEPTH. TO BE PLACED IN LAYERS NOT TO EXCEED 2″ IN DEPTH.
E1	PROP. APPROX. 5 ½″ ASPHALT CONCRETE BASE COURSE, TYPE B25.0B, AT AN AVERAGE RATE OF 627 LBS. PER SQ. YD.
E2	PROP. VAR. DEPTH ASPHALT CONCRETE BASE COURSE, TYPE B25.0B, AT AN AVERAGE RATE OF 114 LBS. PER SQ. YD. PER 1″ DEPTH. TO BE PLACED IN LAYERS NOT LESS THAN 3″ IN DEPTH OR GREATER THAN 5½″ IN DEPTH.
J1	6″ AGGREGATE BASE COURSE
T	EARTH MATERIAL.
U	EXISTING PAVEMENT.
W	VARIABLE DEPTH ASPHALT PAVEMENT (SEE STANDARD WEDGING DETAIL)

NOTE: PAVEMENT EDGE SLOPES ARE 1:1 UNLESS SHOWN OTHERWISE.

NOTES TO CONTRACTOR

Perform the work in accordance with Section 607 of the January 2012 North Carolina Department of Transportation Standard Specifications for Roads and Structures. Resurfacing will be accomplished at the same time as the milling operation.

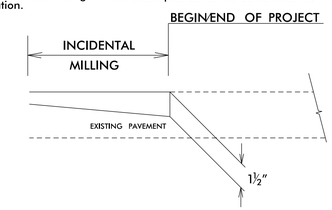

NOTE: UTILIZE INCIDENTAL MILLING TO MAKE PAVEMENT TIE-INS
-L- STA. 10+47.29 TO -L- STA. 11+22.29
-L- STA. 16+54.93 TO -L- STA. 17+29.93

PROJECT REFERENCE NO.	SHEET NO.
17BP.1.R.82	2
R/W SHEET NO.	
ROADWAY DESIGN ENGINEER	HYDRAULICS ENGINEER

DocuSigned by: Bob A. May 5102B4A... NORTH CAROLINA PROFESSIONAL SEAL 21116 ENGINEER BOB A. MAY 8/9/2017

DOCUMENT NOT CONSIDERED FINAL UNLESS ALL SIGNATURES COMPLETED

WETHERILL ENGINEERING
559 Jones Franklin Rd. Suite 164
Raleigh, N.C. 27606
License No. F-0377
Bus: 919 851 8077
Fax: 919 851 8107
TRANSPORTATION PLANNING/DESIGN - BRIDGE/STRUCTURE DESIGN
CIVIL/SITE DESIGN - GIS/GPS - CONSTRUCTION OBSERVATION

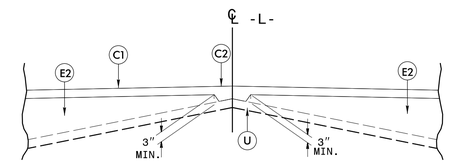

Detail Showing Method of Wedging

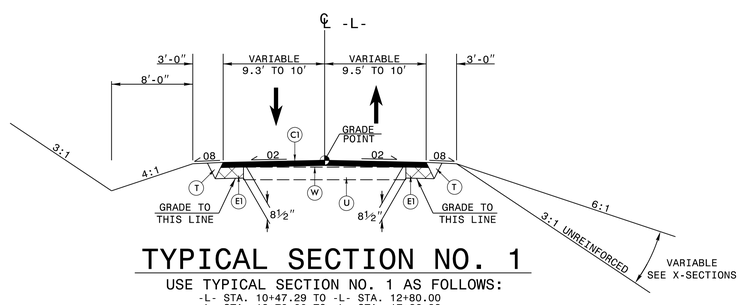

TYPICAL SECTION NO. 1

USE TYPICAL SECTION NO. 1 AS FOLLOWS:
-L- STA. 10+47.29 TO -L- STA. 12+80.00
-L- STA. 13+70.00 TO -L- STA. 17+26.93

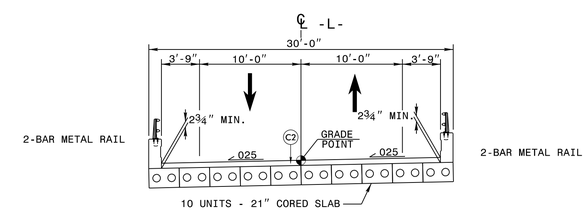

TYPICAL SECTION NO. 3

USE TYPICAL SECTION NO. 3 AS FOLLOWS:
-L- STA. 12+94.87 TO -L- STA. 13+52.13

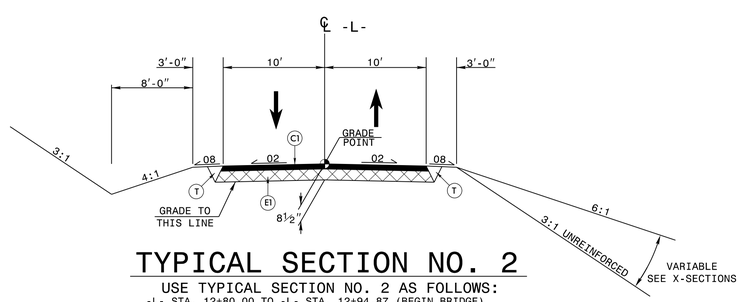

TYPICAL SECTION NO. 2

USE TYPICAL SECTION NO. 2 AS FOLLOWS:
-L- STA. 12+80.00 TO -L- STA. 12+94.87 (BEGIN BRIDGE)
-L- STA. 13+52.13 (END BRIDGE) TO -L- STA. 13+70.00

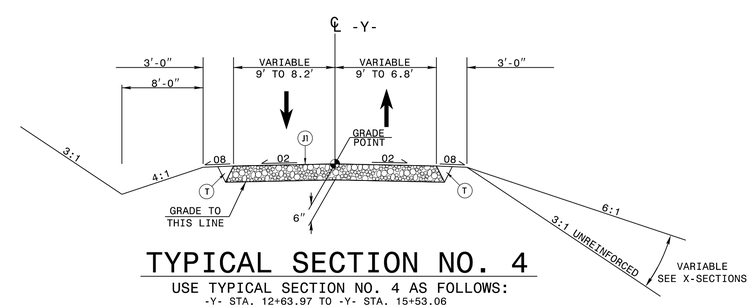

TYPICAL SECTION NO. 4

USE TYPICAL SECTION NO. 4 AS FOLLOWS:
-Y- STA. 12+63.97 TO -Y- STA. 15+53.06

8/7/2017
17BP.1.R.82_Rdy_psh_02_typ.dgn
USER:bmay