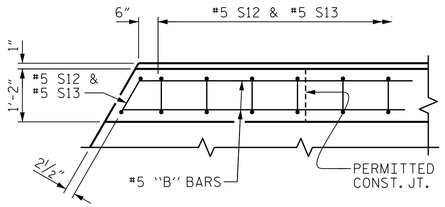

PLAN OF PARAPET

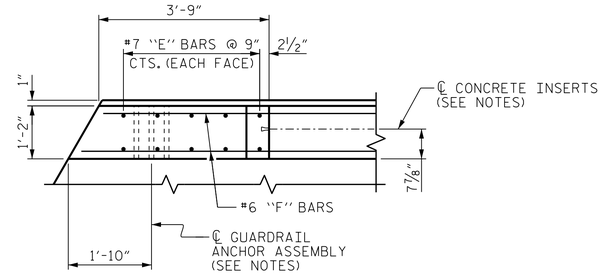

PLAN OF END POST

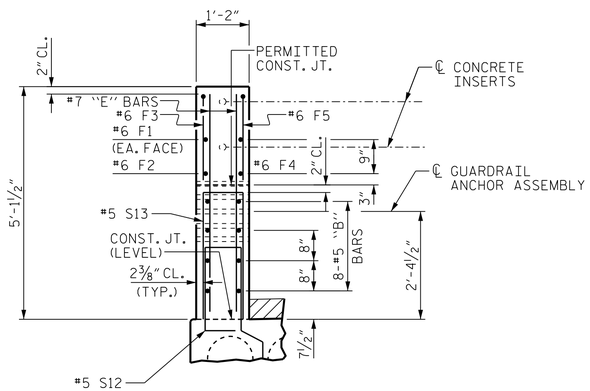

END VIEW

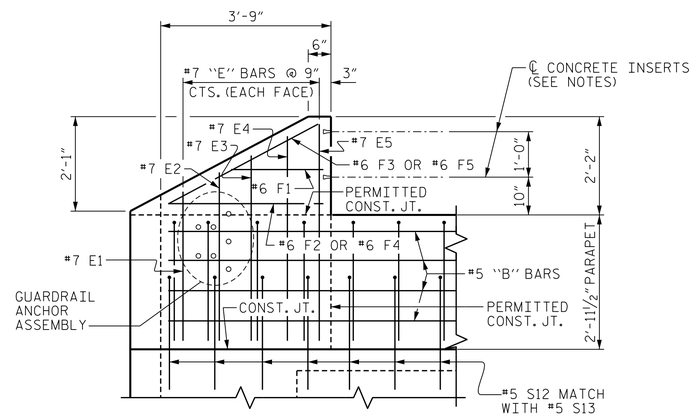

ELEVATION

PARAPET AND END POST FOR TWO BAR RAIL

END BENT 1 SHOWN, END BENT 2 SIMILAR

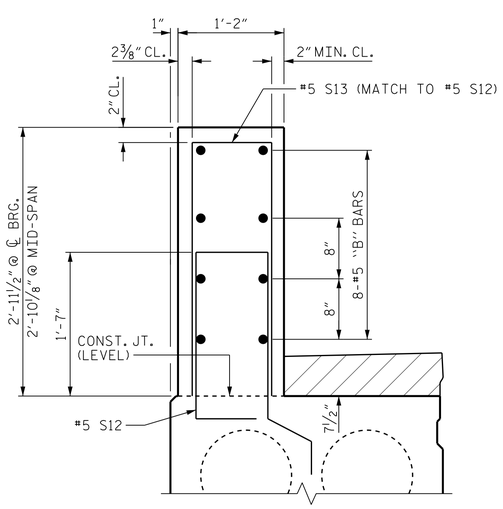

SECTION THRU PARAPET

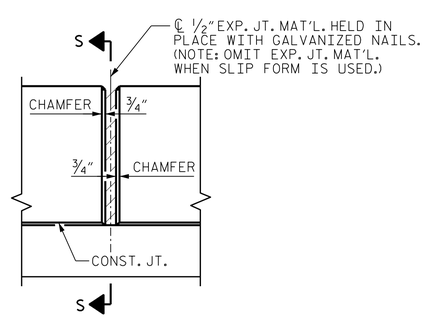

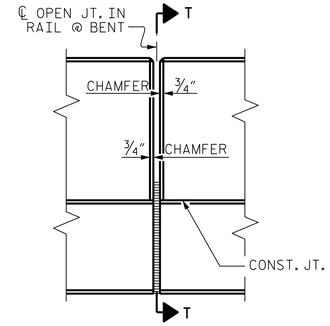

ELEVATION AT EXPANSION JOINTS

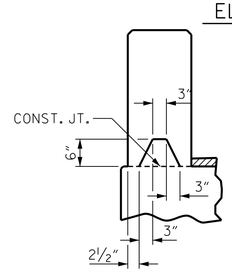

SECTION S-S

AT DAM IN OPEN JOINT
(THIS IS TO BE USED ONLY
WHEN SLIP FORM IS USED.)

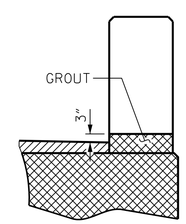

SECTION T-T

AT OPEN JOINT AT BENT
(THIS IS TO BE USED WHERE
FOAM JOINT IS NOT USED)

PARAPET DETAILS

NOTES

ALL REINFORCING STEEL IN PARAPET AND END POSTS SHALL BE EPOXY COATED.

FOR DETAILS OF CONCRETE INSERTS IN END POSTS, SEE "RAIL POST SPACINGS AND END OF RAIL DETAILS" SHEET.

#5 S12 BARS ARE INCLUDED IN THE BILL OF MATERIAL FOR CORED SLAB UNITS.

GROOVED CONTRACTION JOINTS, ½" IN DEPTH, SHALL BE TOOLED IN ALL EXPOSED FACES OF THE PARAPET IN ACCORDANCE WITH ARTICLE 825-10(B) OF THE STANDARD SPECIFICATIONS. THE CONTRACTION JOINTS SHALL BE LOCATED AT A SPACING OF 8 FEET TO 10 FEET BETWEEN EXPANSION JOINTS. NO CONTRACTION JOINTS WILL BE REQUIRED FOR SEGMENTS LESS THAN 10 FEET IN LENGTH.

FOR DETAILS AND LOCATION OF GUARDRAIL ANCHOR ASSEMBLIES, SEE "GUARDRAIL ANCHORAGE DETAILS FOR METAL RAILS" SHEETS.

THE REINFORCING STEEL AND CONCRETE IN THE END POSTS IS INCLUDED IN THE UNIT PRICE BID FOR THE CONCRETE PARAPET.

BILL OF MATERIAL

PARAPET AND END POSTS

BAR	NO.	SIZE	TYPE	LENGTH	WEIGHT
✳B34	256	#5	STR	15'-6"	4139
✳E1	8	#7	STR	2'-11"	48
✳E2	8	#7	STR	3'-5"	56
✳E3	8	#7	STR	3'-11"	64
✳E4	8	#7	STR	4'-5"	72
✳E5	8	#7	STR	4'-9"	78
✳F1	8	#6	STR	2'-0"	24
✳F2	4	#6	STR	3'-5"	21
✳F3	4	#6	STR	3'-8"	22
✳F4	4	#6	STR	3'-11"	24
✳F5	4	#6	STR	4'-0"	24
✳S13	456	#5	1	5'-8"	2695

✳EPOXY COATED REINFORCING STEEL	7,267	LBS.
CLASS AA CONCRETE	57.3	C. Y.
1'-2" x 2'-11½" CONCRETE PARAPET	440.87	LIN. FT.

BAR TYPE

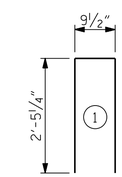

ALL BAR DIMENSIONS ARE OUT TO OUT.

PROJECT NO. B-5602

HYDE COUNTY

STATION: 15+61.00 -L-

NORTH CAROLINA PROFESSIONAL SEAL 24939 ENGINEER BYRON E. ATKINSON

7/19/2017

DOCUMENT NOT CONSIDERED FINAL UNLESS ALL SIGNATURES COMPLETED

MI ENGINEERING
1011 SCHAUB DRIVE, SUITE 100
RALEIGH, NC 27606
(919) 851-6606
FIRM PE NUMBER : P-0671

STATE OF NORTH CAROLINA
DEPARTMENT OF TRANSPORTATION
RALEIGH

SUPERSTRUCTURE

END POSTS & PARAPET DETAILS

REVISIONS								SHEET NO.
NO.	BY:	DATE:	NO.	BY:	DATE:			S-10
1			3					TOTAL SHEETS
2			4					30

DRAWN BY :	B.E. LANNING	DATE :	01/17
CHECKED BY :	B.E. ATKINSON	DATE :	01/17
DESIGN ENGINEER OF RECORD :	B.E. ATKINSON	DATE :	06/17

7/19/2017
12:58:13 PM
User: blanning
Filename: P:\NC Bridges\MI6003_VHB_Div. 1 Br. Repl. (4 Bridges)\MI6003.04_Hyde 8_B-5602\B-5602\Structures\401_019_B5602_SMU_CP1.dgn