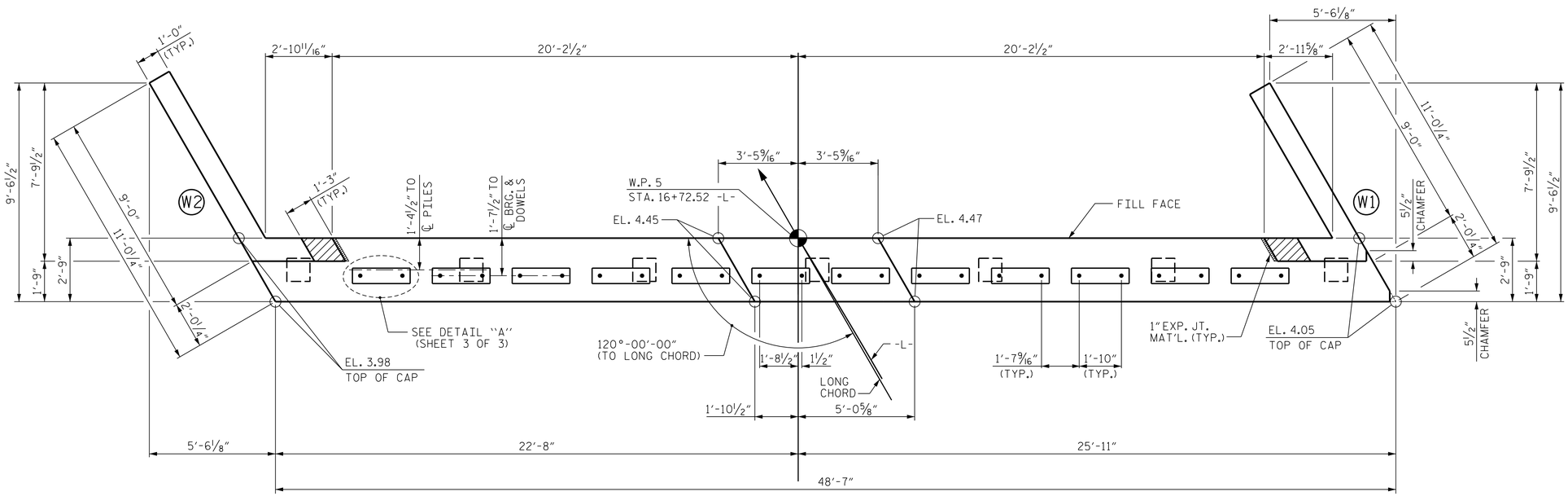

PLAN

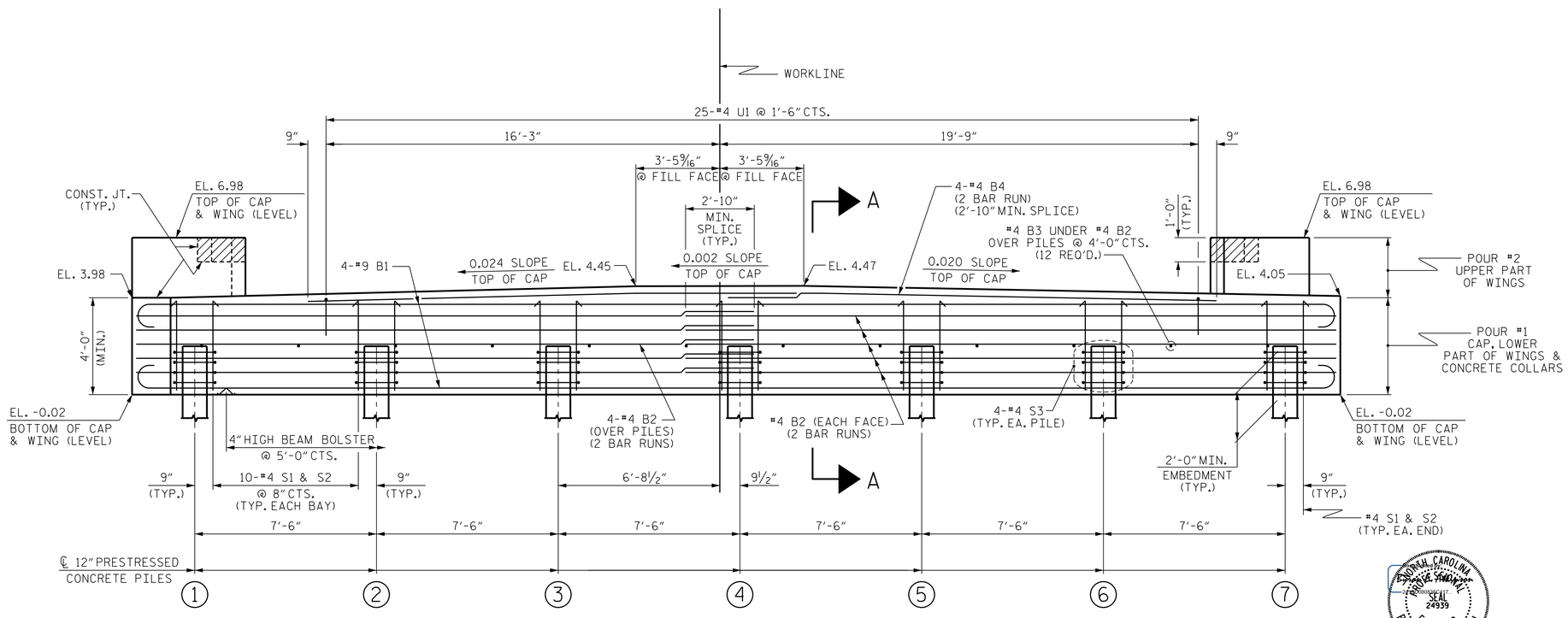

ELEVATION

WINGS NOT SHOWN FOR CLARITY.
FOR SECTION A-A, SEE SHEET 3 OF 3.

NOTES

STIRRUPS IN CAP MAY BE SHIFTED AS NECESSARY TO CLEAR DOWELS.

THE CONCRETE IN THE SHADED AREA OF THE WING SHALL BE POURED AFTER THE CONCRETE PARAPET IS CAST IF SLIP FORMING IS USED.

FOR WING DETAILS, SEE SHEET 2 OF 3.

PROJECT NO. B-5602
HYDE COUNTY
STATION: 15+61.00 -L-

SHEET 1 OF 3

STATE OF NORTH CAROLINA
DEPARTMENT OF TRANSPORTATION
RALEIGH

SUBSTRUCTURE
END BENT No. 2

NORTH CAROLINA PROFESSIONAL SEAL 24939 ENGINEER BYRON E. ATKINSON
7/19/2017

DOCUMENT NOT CONSIDERED FINAL UNLESS ALL SIGNATURES COMPLETED

MI ENGINEERING
1011 SCHAUB DRIVE, SUITE 100
RALEIGH, NC 27606
(919) 851-6606
FIRM PE NUMBER : P-0671

DRAWN BY :	B.E. LANNING	DATE :	06/17
CHECKED BY :	B.E. ATKINSON	DATE :	06/17
DESIGN ENGINEER OF RECORD :	B.E. ATKINSON	DATE :	06/17

REVISIONS									SHEET NO.
NO.	BY:	DATE:	NO.	BY:	DATE:				S-24
1			3						TOTAL SHEETS
2			4						30

7/19/2017
12:58:45 PM
User: blanning
Filename: P:\NC Bridges\MI6003.VHB.Div.1 Br. Repl.(4 Bridges)\MI6003.04_Hyde 8.B-5602\B-5602\Structures\401_047.B5602.SMU.EB2A.dgn