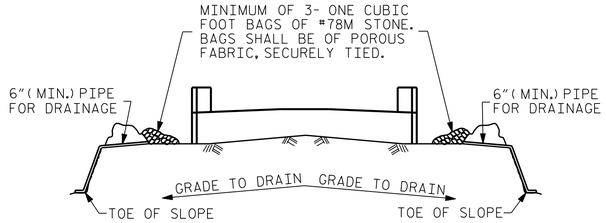

BAGGED STONE AND PIPE SHALL BE PLACED IMMEDIATELY AFTER COMPLETION OF END BENT EXCAVATION. PIPE MAY BE EITHER CONCRETE, CORRUGATED STEEL, CORRUGATED ALUMINUM ALLOY, OR CORRUGATED PLASTIC. PERFORATED PIPE WILL NOT BE ALLOWED.

BAGGED STONE SHALL REMAIN IN PLACE UNTIL THE ENGINEER DIRECTS THAT IT BE REMOVED. THE CONTRACTOR SHALL REMOVE AND DISPOSE OF SILT ACCUMULATIONS AT BAGGED STONE WHEN SO DIRECTED BY THE ENGINEER. BAGS SHALL BE REMOVED AND REPLACED WHENEVER THE ENGINEER DETERMINES THAT THEY HAVE DETERIORATED AND LOST THEIR EFFECTIVENESS.

NO SEPARATE PAYMENT WILL BE MADE FOR THIS WORK AND THE ENTIRE COST OF THIS WORK SHALL BE INCLUDED IN THE UNIT CONTRACT PRICE BID FOR THE SEVERAL PAY ITEMS.

TEMPORARY DRAINAGE AT END BENT

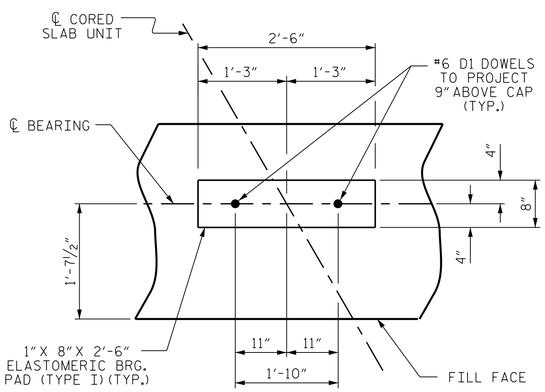

DETAIL "A"

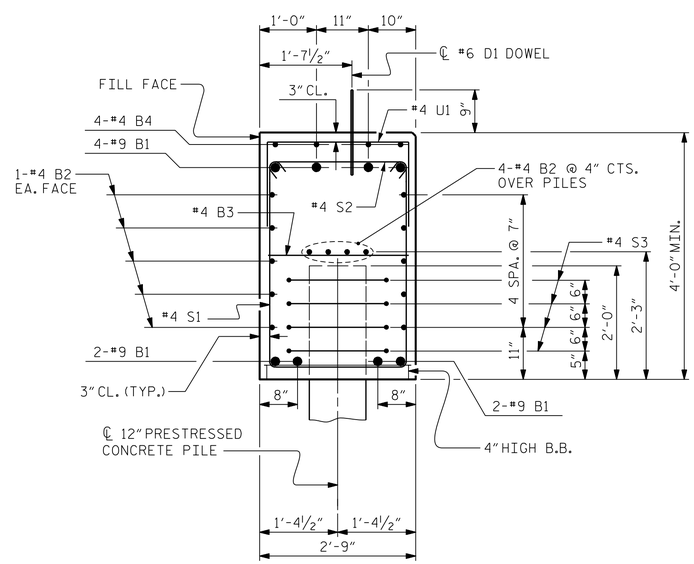

SECTION A-A

BAR TYPES

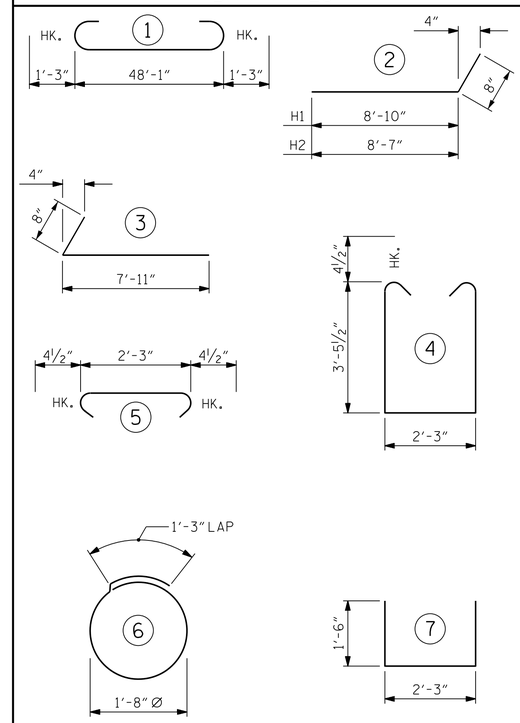

ALL BAR DIMENSIONS ARE OUT TO OUT.

BILL OF MATERIAL

END BENT 1

BAR	NO.	SIZE	TYPE	LENGTH	WEIGHT
* B1	8	#9	1	50'-7"	1376
* B2	28	#4	STR	25'-6"	477
* B3	12	#4	STR	2'-3"	18
* B4	8	#4	STR	20'-3"	108
* D1	24	#6	STR	1'-6"	54
* H1	10	#4	2	9'-6"	63
* H2	10	#4	2	9'-3"	62
* H3	20	#4	3	8'-7"	115
* K1	16	#4	STR	3'-5"	37
* S1	62	#4	4	9'-11"	411
* S2	62	#4	5	3'-0"	124
* S3	28	#4	6	6'-6"	122
* U1	25	#4	7	5'-3"	88
* V1	53	#4	STR	6'-6"	230

* EPOXY COATED REINFORCING STEEL 3285 LBS.

CLASS AA CONCRETE BREAKDOWN

POUR #1 CAP, LOWER PART OF WINGS & COLLARS ▲ 23.2 C.Y.

POUR #2 UPPER PART OF WINGS 2.6 C.Y.

TOTAL CLASS AA CONCRETE ▲ 25.8 C.Y.

12" PRESTRESSED CONCRETE PILES

NO: 7 LIN. FT.= 469

PILE DRIVING EQUIPMENT SETUP FOR 12" PRESTRESSED CONCRETE PILES NO.: 7

PILE REDRIVES NO.: 4

▲ CONCRETE DISPLACED BY THE 12" PRESTRESSED CONCRETE PILES HAS BEEN DEDUCTED FROM THE CONCRETE QUANTITY.

PROJECT NO. B-5602

HYDE COUNTY

STATION: 15+61.00 -L-

SHEET 3 OF 3

STATE OF NORTH CAROLINA
DEPARTMENT OF TRANSPORTATION
RALEIGH

SUBSTRUCTURE

END BENT No. 1
DETAILS

NORTH CAROLINA PROFESSIONAL SEAL 24939 ENGINEER BYRON E. ATKINSON

7/19/2017

DOCUMENT NOT CONSIDERED FINAL UNLESS ALL SIGNATURES COMPLETED

MI ENGINEERING
1011 SCHAUB DRIVE, SUITE 100
RALEIGH, NC 27606
(919) 851-6606
FIRM PE NUMBER : P-0671

REVISIONS						
NO.	BY:	DATE:	NO.	BY:	DATE:	
1			3			
2			4			

SHEET NO. S-17
TOTAL SHEETS 30

DRAWN BY :	B.E. LANNING	DATE :	06/17
CHECKED BY :	B.E. ATKINSON	DATE :	06/17
DESIGN ENGINEER OF RECORD :	B.E. ATKINSON	DATE :	06/17

7/19/2017
12:58:29 PM
User: blanning
Filename: P:\NC Bridges\MI6003_VHB_Div.1 Br. Repl. (4 Bridges)\MI6003.04_Hyde 8_B-5602\B-5602\Structures\401_033_B5602_SMU_EB1C.dgn