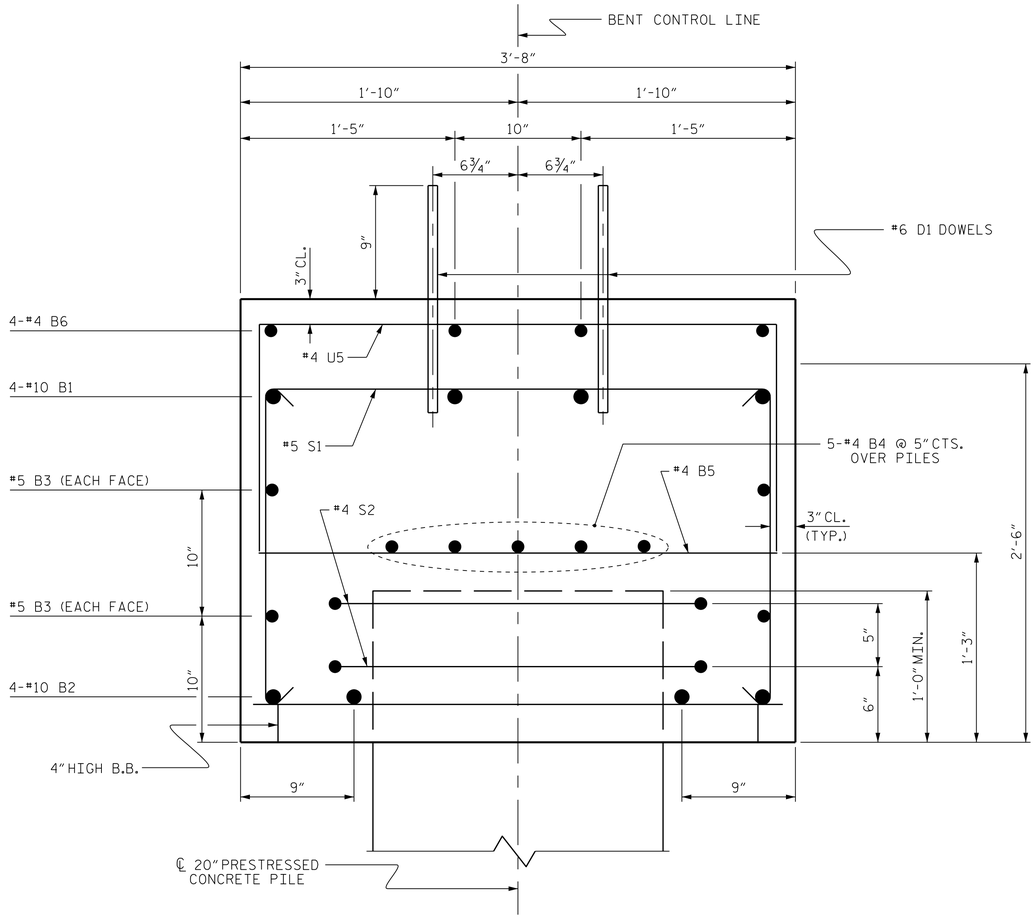


SECTION A-A

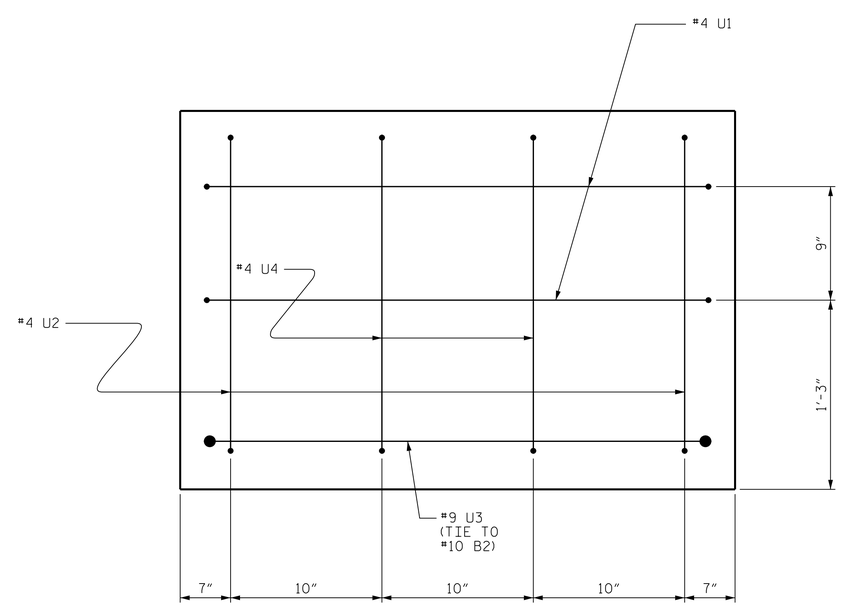


END OF CAP VIEW

(TYPICAL BOTH ENDS)

## BAR TYPES

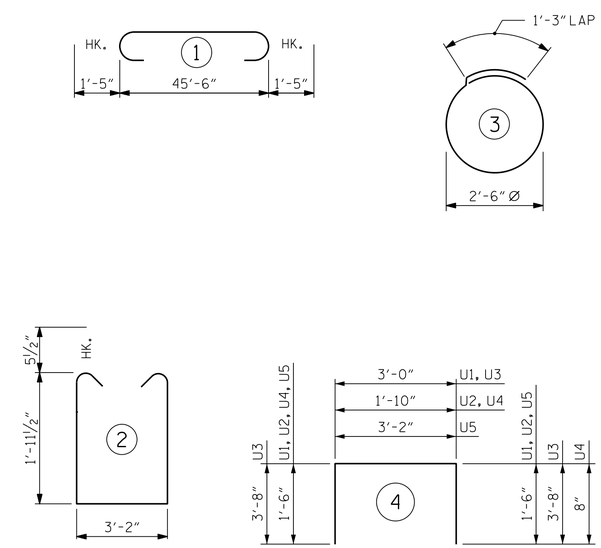


ALL BAR DIMENSIONS ARE OUT TO OUT.

## BILL OF MATERIAL

### BENT NO. 1

| BAR | NO. | SIZE | TYPE | LENGTH | WEIGHT |
|---|---|---|---|---|---|
| ✳ B1 | 4 | #10 | 1 | 48'-4" | 832 |
| ✳ B2 | 4 | #10 | STR | 45'-8" | 786 |
| ✳ B3 | 4 | #5 | STR | 45'-8" | 191 |
| ✳ B4 | 10 | #4 | STR | 24'-3" | 162 |
| ✳ B5 | 12 | #4 | STR | 3'-2" | 25 |
| ✳ B6 | 8 | #4 | STR | 20'-3" | 108 |
| | | | | | |
| ✳ D1 | 48 | #6 | STR | 1'-6" | 108 |
| | | | | | |
| ✳ S1 | 44 | #5 | 2 | 8'-0" | 367 |
| ✳ S2 | 16 | #4 | 3 | 9'-2" | 98 |
| | | | | | |
| ✳ U1 | 4 | #4 | 4 | 6'-0" | 16 |
| ✳ U2 | 4 | #4 | 4 | 4'-10" | 13 |
| ✳ U3 | 2 | #9 | 4 | 10'-4" | 70 |
| ✳ U4 | 4 | #4 | 4 | 4'-0" | 11 |
| ✳ U5 | 25 | #4 | 4 | 6'-2" | 103 |

✳ EPOXY COATED REINFORCING STEEL 2890 LBS

CLASS AA CONCRETE BREAKDOWN

TOTAL CLASS AA CONCRETE ▲ 16.9 C.Y.

20" PRESTRESSED CONCRETE PILES

No. 8 LIN. FT. 448

PREDRILLING FOR PILES LIN. FT. 205

PILE REDRIVES No. 8

PILE DRIVING EQUIPMENT SETUP FOR 20" PRESTRESSED CONCRETE PILES No. 8

▲ CONCRETE DISPLACED BY THE 20" PRESTRESSED CONCRETE PILES HAS BEEN DEDUCTED FROM THE CONCRETE QUANTITY.

PROJECT NO. B-5602

HYDE COUNTY

STATION: 15+61.00 -L-

SHEET 2 OF 2

STATE OF NORTH CAROLINA
DEPARTMENT OF TRANSPORTATION
RALEIGH

SUBSTRUCTURE

BENT No. 1

NORTH CAROLINA PROFESSIONAL SEAL 24939 ENGINEER BYRON E. ATKINSON

7/19/2017

DOCUMENT NOT CONSIDERED FINAL UNLESS ALL SIGNATURES COMPLETED

MI ENGINEERING
1011 SCHAUB DRIVE, SUITE 100
RALEIGH, NC 27606
(919) 851-6606
FIRM PE NUMBER : P-0671

| REVISIONS | | | | | | | SHEET NO. |
|---|---|---|---|---|---|---|---|
| NO. | BY: | DATE: | NO. | BY: | DATE: | | S-19 |
| 1 | | | 3 | | | | TOTAL SHEETS |
| 2 | | | 4 | | | | 30 |

| | | | |
|---|---|---|---|
| DRAWN BY : | B.E. LANNING | DATE : | 06/17 |
| CHECKED BY : | B.E. ATKINSON | DATE : | 06/17 |
| DESIGN ENGINEER OF RECORD : | B.E. ATKINSON | DATE : | 06/17 |

7/19/2017
12:58:34 PM
User: blanning
Filename: P:\NC Bridges\M16003_VHB_Div. 1 Br. Repl. (4 Bridges)\M16003.04_Hyde 8_B-5602\B-5602\Structures\401_037_B5602_SMU_BIB.dgn