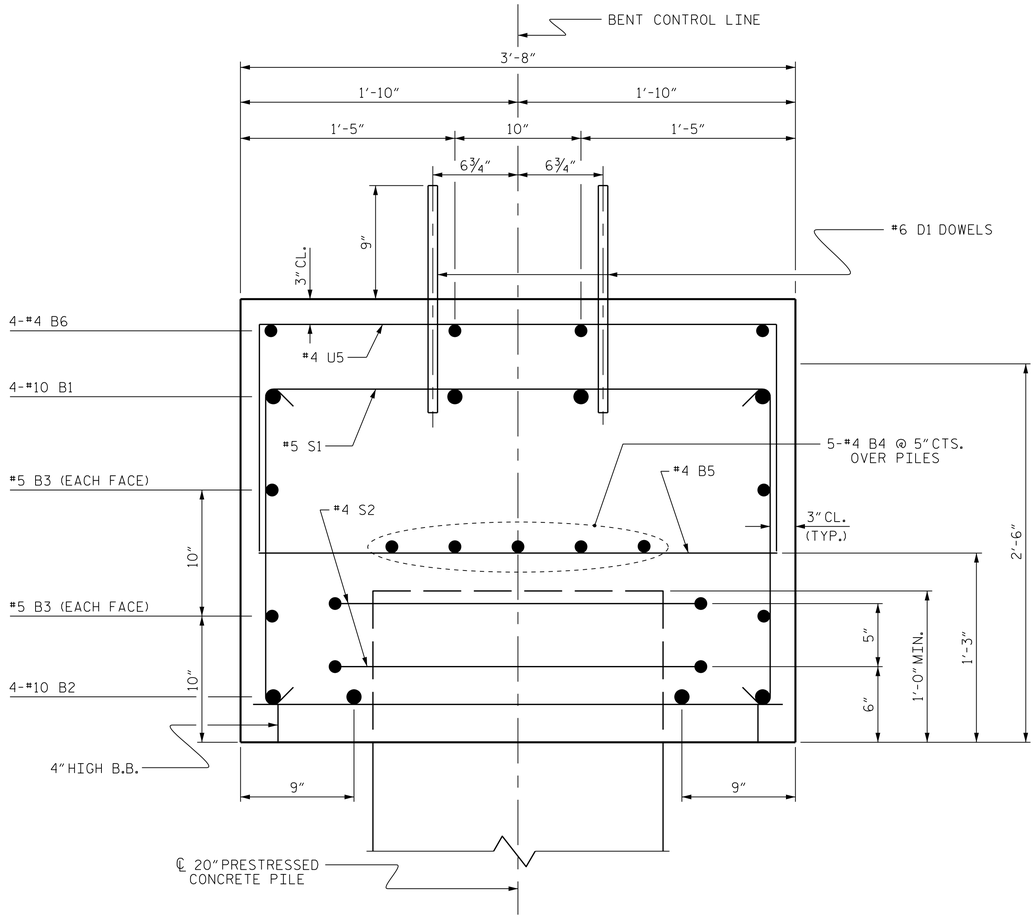

SECTION A-A

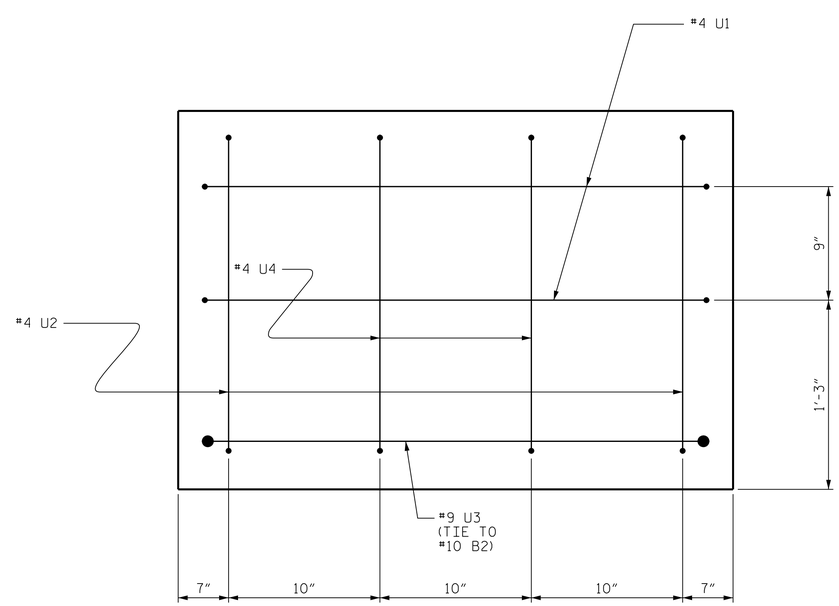

END OF CAP VIEW

(TYPICAL BOTH ENDS)

BAR TYPES

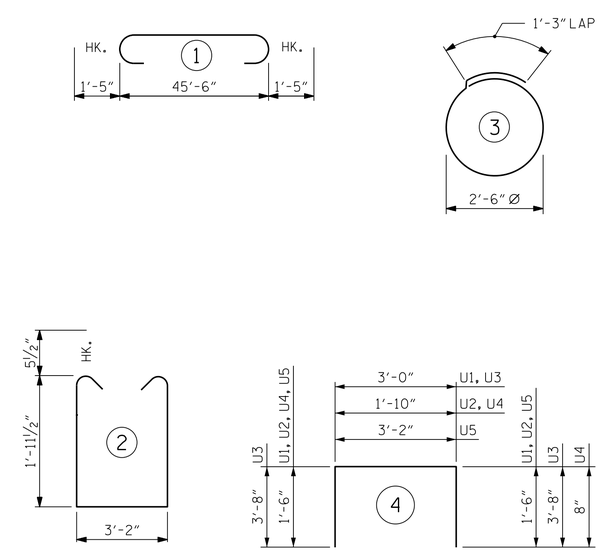

ALL BAR DIMENSIONS ARE OUT TO OUT.

BILL OF MATERIAL

BENT NO. 2

BAR	NO.	SIZE	TYPE	LENGTH	WEIGHT
✳ B1	4	#10	1	48'-4"	832
✳ B2	4	#10	STR	45'-8"	786
✳ B3	4	#5	STR	45'-8"	191
✳ B4	10	#4	STR	24'-3"	162
✳ B5	12	#4	STR	3'-2"	25
✳ B6	8	#4	STR	20'-3"	108
✳ D1	48	#6	STR	1'-6"	108
✳ S1	44	#5	2	8'-0"	367
✳ S2	16	#4	3	9'-2"	98
✳ U1	4	#4	4	6'-0"	16
✳ U2	4	#4	4	4'-10"	13
✳ U3	2	#9	4	10'-4"	70
✳ U4	4	#4	4	4'-0"	11
✳ U5	25	#4	4	6'-2"	103

✳ EPOXY COATED REINFORCING STEEL 2890 LBS

CLASS AA CONCRETE BREAKDOWN

TOTAL CLASS AA CONCRETE ▲ 16.9 C.Y.

20" PRESTRESSED CONCRETE PILES

No. 8 LIN. FT. 448

PREDRILLING FOR PILES LIN. FT. 160

PILE REDRIVES No. 8

PILE DRIVING EQUIPMENT SETUP FOR 20" PRESTRESSED CONCRETE PILES No. 8

▲ CONCRETE DISPLACED BY THE 20" PRESTRESSED CONCRETE PILES HAS BEEN DEDUCTED FROM THE CONCRETE QUANTITY.

PROJECT NO. B-5602

HYDE COUNTY

STATION: 15+61.00 -L-

SHEET 2 OF 2

STATE OF NORTH CAROLINA
DEPARTMENT OF TRANSPORTATION
RALEIGH

SUBSTRUCTURE

BENT No. 2

NORTH CAROLINA PROFESSIONAL SEAL 24939 ENGINEER BYRON E. ATKINSON

7/19/2017

DOCUMENT NOT CONSIDERED FINAL UNLESS ALL SIGNATURES COMPLETED

MI ENGINEERING
1011 SCHAUB DRIVE, SUITE 100
RALEIGH, NC 27606
(919) 851-6606
FIRM PE NUMBER : P-0671

REVISIONS							SHEET NO.
NO.	BY:	DATE:	NO.	BY:	DATE:		S-21
1			3				TOTAL SHEETS
2			4				30

DRAWN BY :	B.E. LANNING	DATE :	06/17
CHECKED BY :	B.E. ATKINSON	DATE :	06/17
DESIGN ENGINEER OF RECORD :	B.E. ATKINSON	DATE :	06/17

7/19/2017
12:58:38 PM
User: blanning
Filename: P:\NC Bridges\MI6003_VHB_Div. 1 Br. Repl. (4 Bridges)\MI6003.04_Hyde 8_B-5602\B-5602\Structures\401_041_B5602_SMU_B2B.dgn