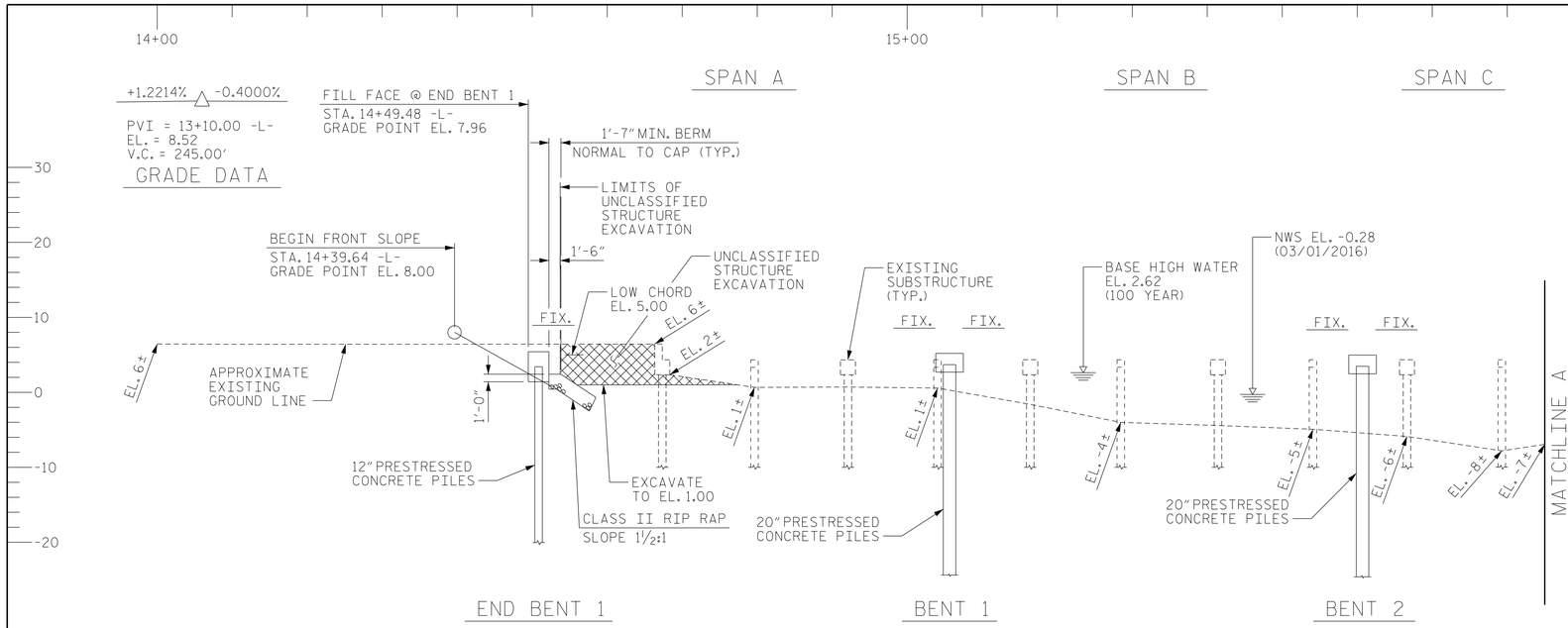

SECTION ALONG -L-

(SECTION TAKEN AT RIGHT ANGLES TO END BENTS AND BENTS)

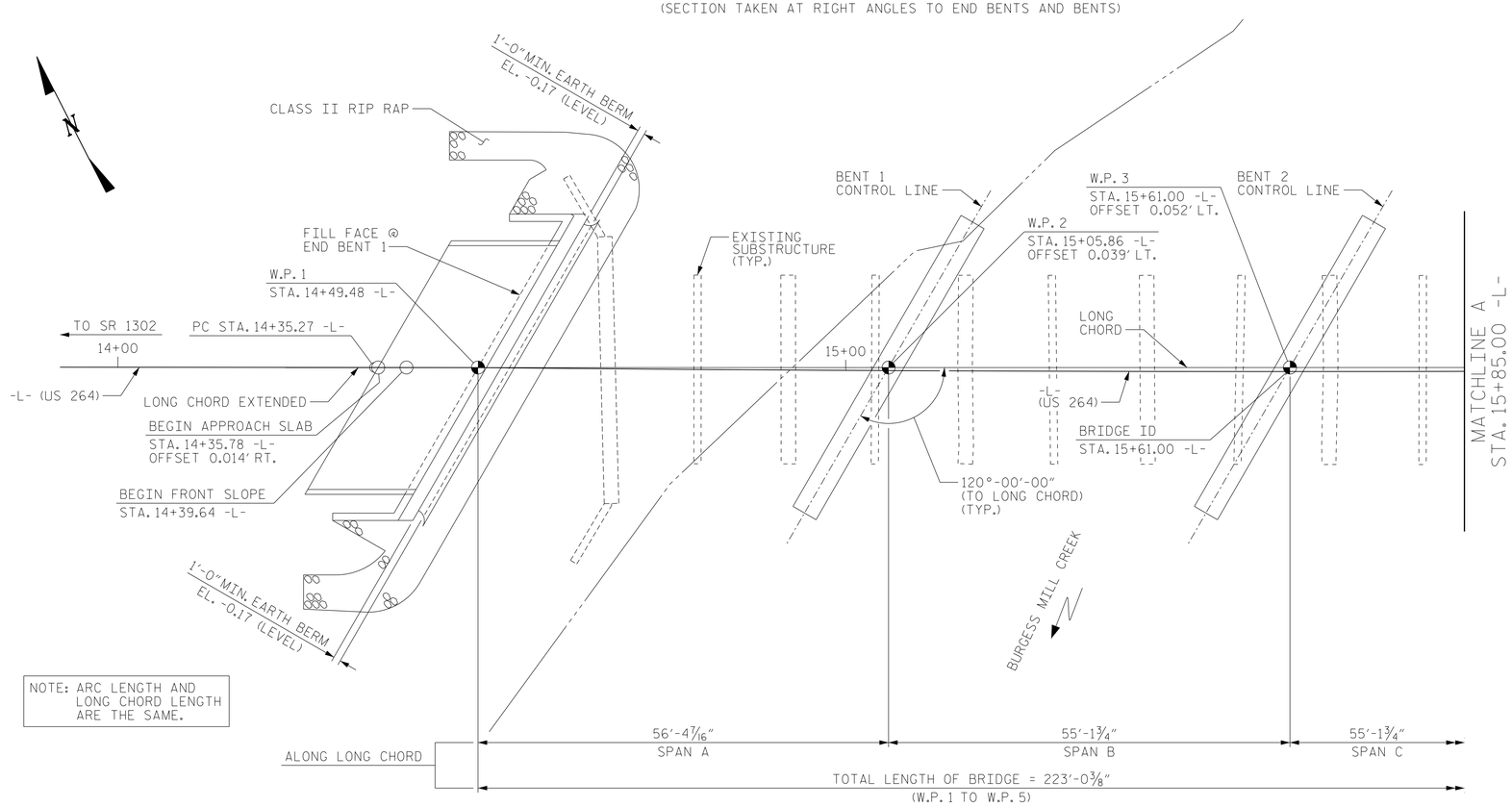

PLAN

(PILES NOT SHOWN FOR CLARITY)

HYDROGRAPHIC DATA

DESIGN DISCHARGE ..... = 1900 CFS
FREQUENCY OF DESIGN FLOOD ..... = 50 YRS.
DESIGN HIGH WATER ELEVATION ..... = 2.3
DRAINAGE AREA ..... = 21.4 SQ. MI.
BASE DISCHARGE (Q100) ..... = 2400 CFS
BASE HIGH WATER ELEVATION ..... = 2.62

OVERTOPPING FLOOD DATA

OVERTOPPING DISCHARGE ..... = 3300± CFS
FREQUENCY OF OVERTOPPING FLOOD ..... = 500± YRS.
OVERTOPPING FLOOD ELEVATION ..... = 3.0

HORIZ. CURVE DATA -L-

PI STA. 15+53.98 -L-
Δ = 00°06'48.1" (LT.)
D = 0°02'51.9"
L = 237.43'
T = 118.71'
R = 120,000.00'

PROJECT NO. B-5602
HYDE COUNTY
STATION: 15+61.00 -L-

SHEET 1 OF 4 REPLACES BRIDGE NO. 8

NORTH CAROLINA
Byron E. Atkinson
PROFESSIONAL SEAL 24939 ENGINEER
BYRON E. ATKINSON
7/19/2017

DOCUMENT NOT CONSIDERED FINAL UNLESS ALL SIGNATURES COMPLETED

MI ENGINEERING
1011 SCHAUB DRIVE, SUITE 100
RALEIGH, NC 27606
(919) 851-6606
FIRM PE NUMBER : P-0671

STATE OF NORTH CAROLINA
DEPARTMENT OF TRANSPORTATION
RALEIGH

GENERAL DRAWING

FOR BRIDGE ON US 264
OVER BURGESS MILL CREEK
BETWEEN SR 1302 AND SR 1167

REVISIONS						SHEET NO.
NO.	BY:	DATE:	NO.	BY:	DATE:	S-1
1			3			TOTAL SHEETS
2			4			30

DRAWN BY : B.E. LANNING DATE : 06/17
CHECKED BY : B.E. ATKINSON DATE : 06/17
DESIGN ENGINEER OF RECORD : B.E. ATKINSON DATE : 06/17

7/19/2017
12:57:52 PM
User: blanning
Filename: P:\NC Bridges\MI6003_VHB_Div. 1 Br. Repl. (4 Bridges)\MI6003.04_Hyde 8_B-5602\B-5602\Structures\401.001.B5602.SMU.GD1.dgn