NOTES :

FOR BERM WIDTH DIMENSIONS, SEE GENERAL DRAWING.

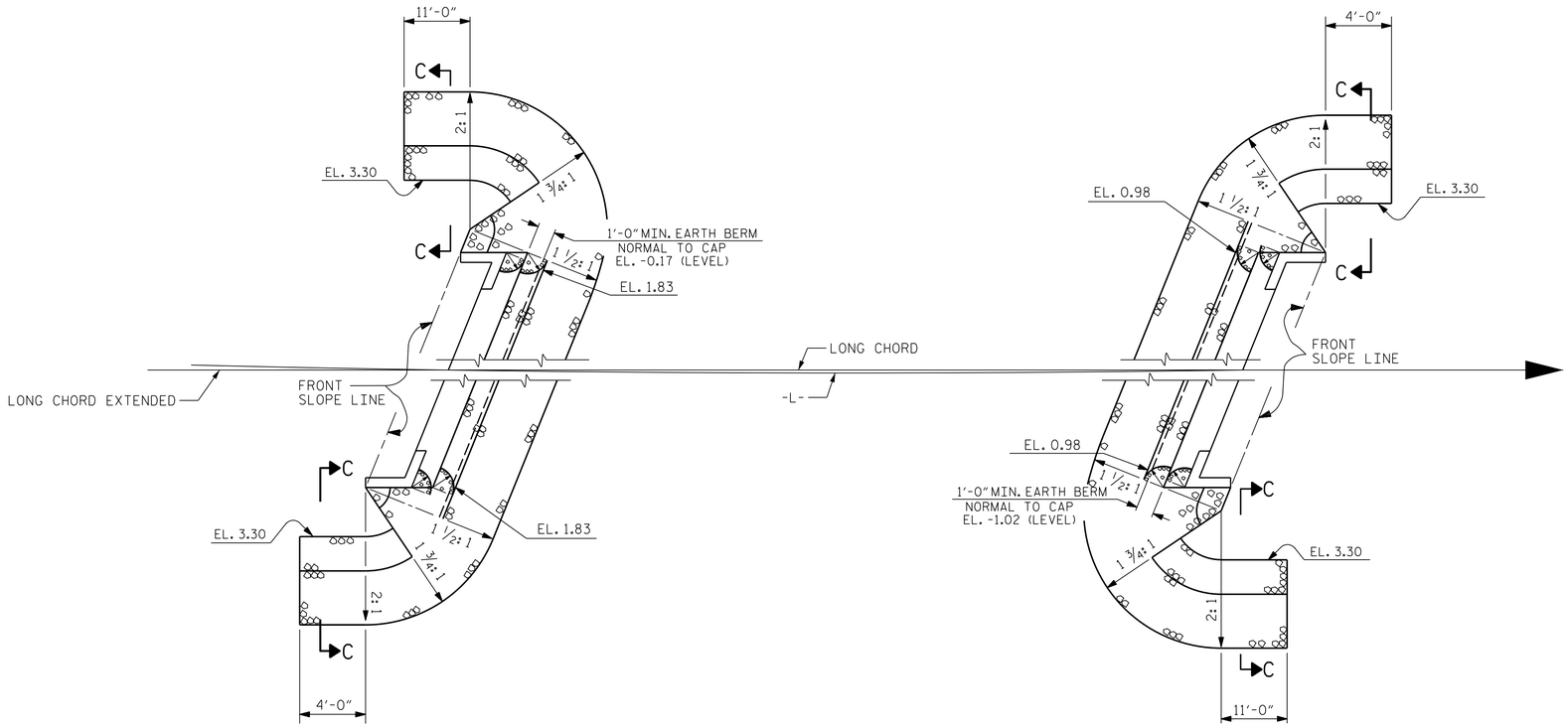

END BENT 1

END BENT 2

PLAN

ESTIMATED QUANTITIES		
BRIDGE @ STA. 15+61.00 -L-	RIP RAP CLASS II (2'-0" THICK)	GEOTEXTILE FOR DRAINAGE
	TONS	SQUARE YARDS
END BENT 1	96	107
END BENT 2	94	105

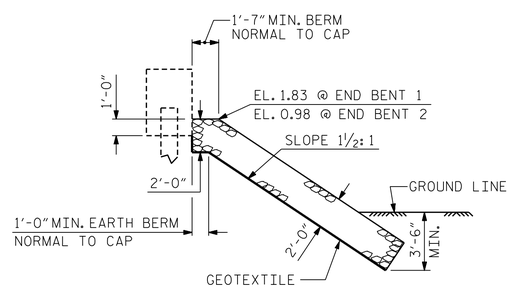

℄ SECTION

BERM RIP RAPPED

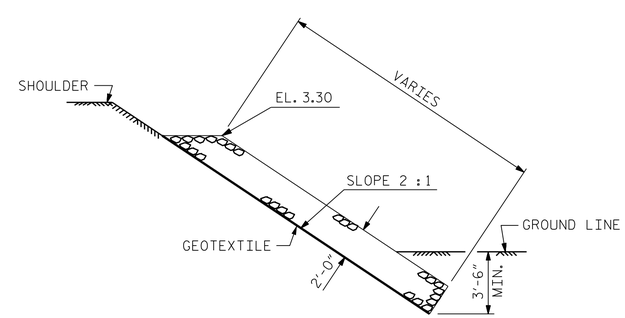

SECTION C-C

PROJECT NO. B-5602

HYDE COUNTY

STATION: 15+61.00 -L-

STATE OF NORTH CAROLINA
DEPARTMENT OF TRANSPORTATION
RALEIGH

STANDARD

RIP RAP DETAILS

NORTH CAROLINA PROFESSIONAL SEAL 24939 ENGINEER BYRON E. ATKINSON

7/19/2017

DOCUMENT NOT CONSIDERED FINAL UNLESS ALL SIGNATURES COMPLETED

MI ENGINEERING
1011 SCHAUB DRIVE, SUITE 100
RALEIGH, NC 27606
(919) 851-6606
FIRM PE NUMBER : P-0671

REVISIONS						
NO.	BY:	DATE:	NO.	BY:	DATE:	
1			3			
2			4			

SHEET NO. S-29

TOTAL SHEETS 30

STD. NO. RR1

ASSEMBLED BY:	B.E. LANNING	DATE:	12/16
CHECKED BY :	B.E. ATKINSON	DATE:	01/17
DESIGN ENGINEER OF RECORD:	B.E. ATKINSON	DATE:	06/17

DRAWN BY :	REK 1/84	REV. 5/1/06R	TLA/GM
CHECKED BY :	RDU 1/84	REV. 10/1/11	MAA/GM
		REV. 12/21/11	MAA/GM

7/19/2017
12:58:57 PM
User: blanning
Filename: P:\NC Bridges\MI6003_VHB_Div.1 Br. Repl. (4 Bridges)\MI6003.04_Hyde 8_B-5602\B-5602\Structures\401_057_B5602_SMU_RR1.dgn