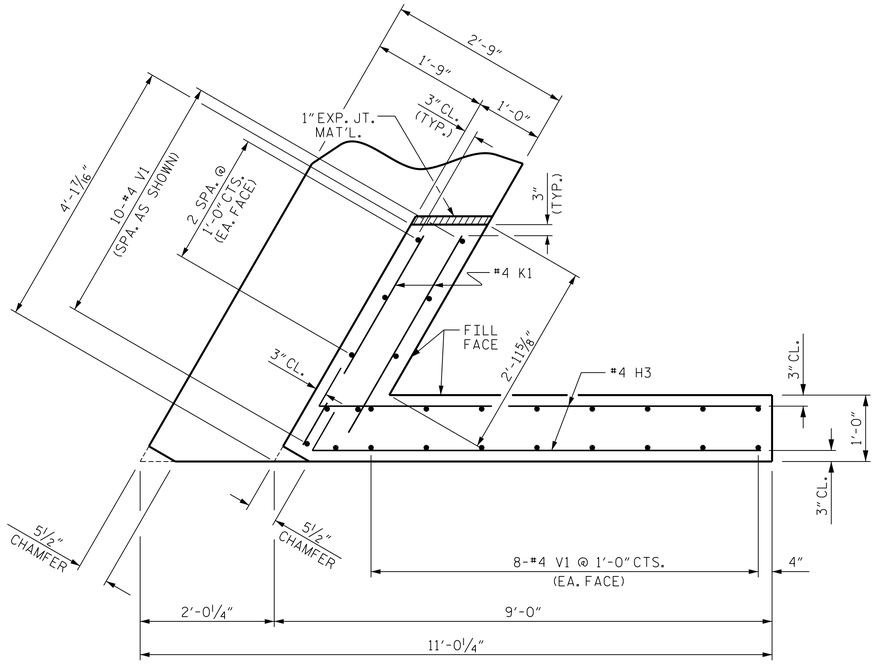

PLAN OF WING (W1)

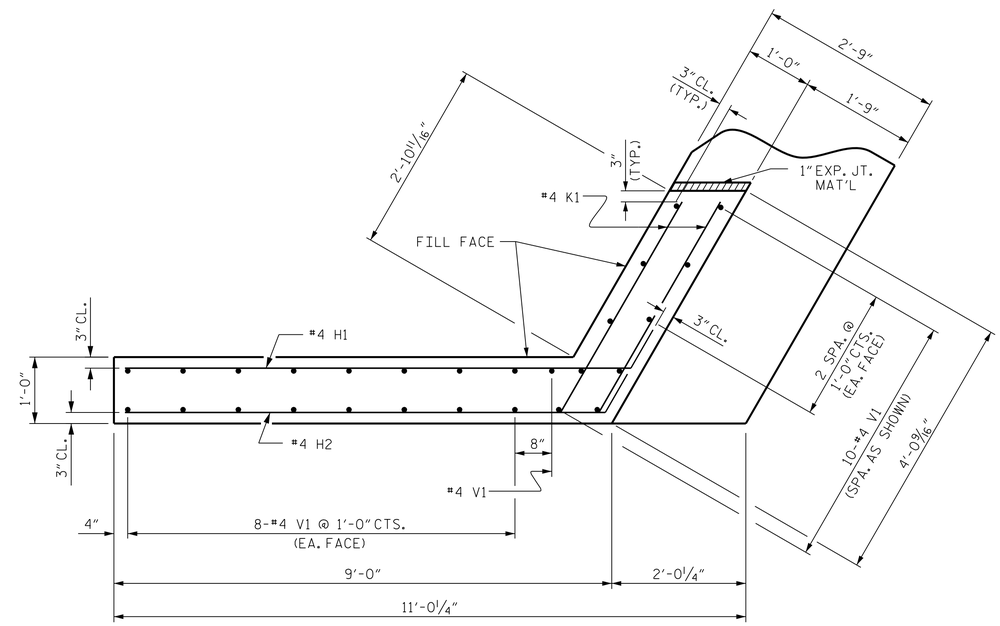

PLAN OF WING (W2)

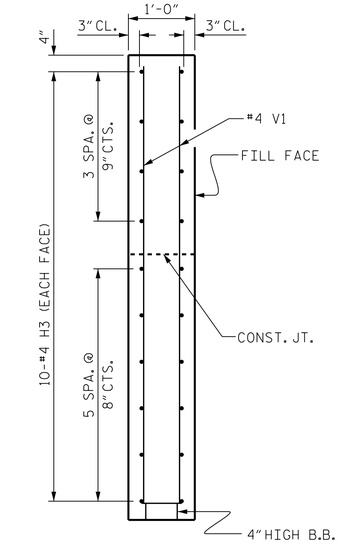

SECTION X-X

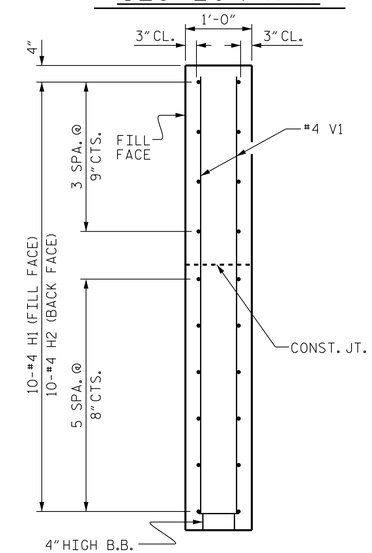

SECTION Y-Y

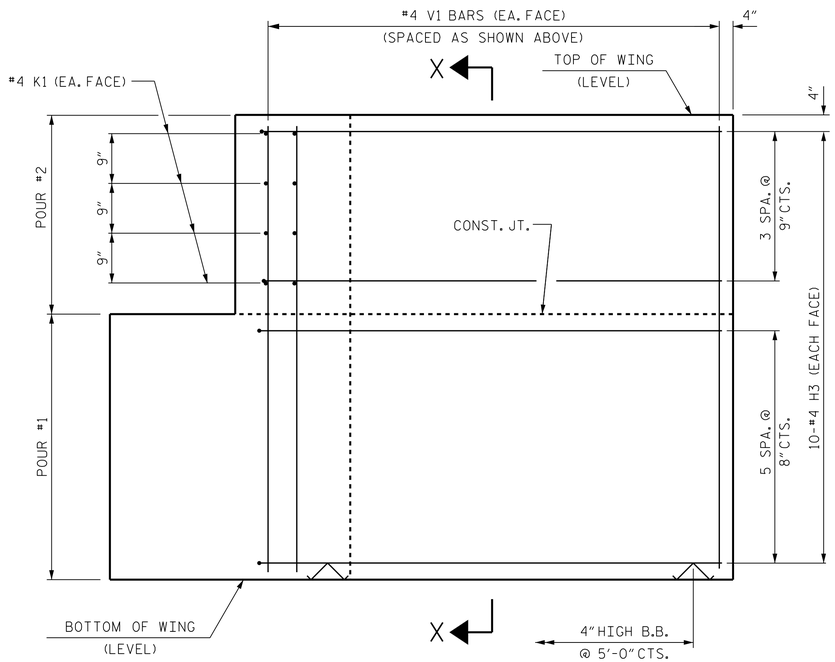

ELEVATION OF WING (W1)

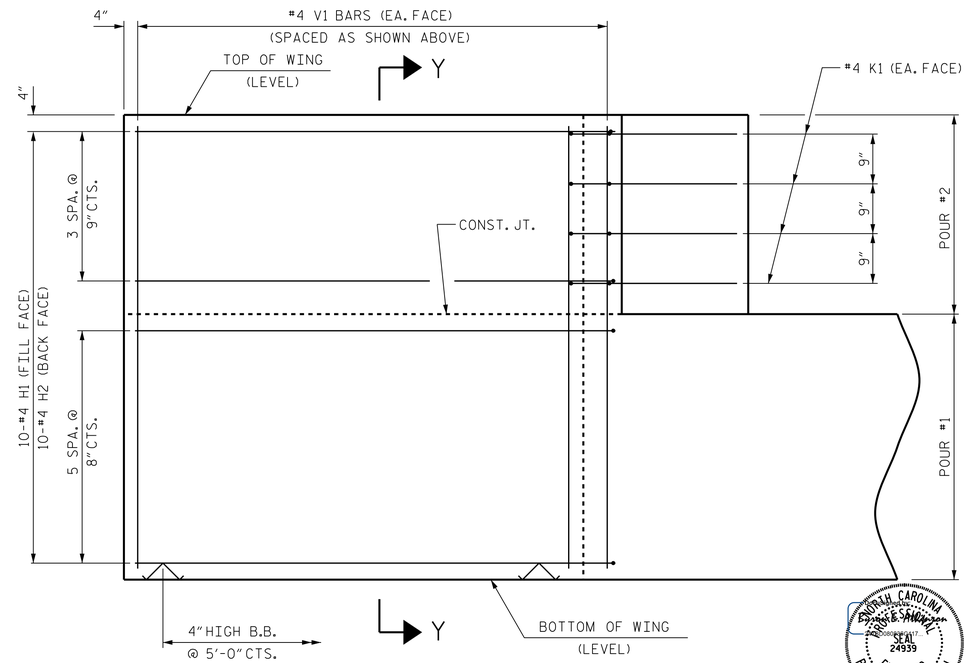

ELEVATION OF WING (W2)

WING DETAILS

STATE OF NORTH CAROLINA
PROFESSIONAL SEAL 24939 ENGINEER BYRON E. ATKINSON
7/19/2017

DOCUMENT NOT CONSIDERED FINAL UNLESS ALL SIGNATURES COMPLETED

MI ENGINEERING
1011 SCHAUB DRIVE, SUITE 100
RALEIGH, NC 27606
(919) 851-6606
FIRM PE NUMBER : P-0671

DRAWN BY :	B.E. LANNING	DATE :	06/17
CHECKED BY :	B.E. ATKINSON	DATE :	06/17
DESIGN ENGINEER OF RECORD :	B.E. ATKINSON	DATE :	06/17

REVISIONS

NO.	BY:	DATE:	NO.	BY:	DATE:
1			3		
2			4		

SHEET NO. S-16
TOTAL SHEETS 30

PROJECT NO. B-5602
HYDE COUNTY
STATION: 15+61.00 -L-

SHEET 2 OF 3

STATE OF NORTH CAROLINA
DEPARTMENT OF TRANSPORTATION
RALEIGH

SUBSTRUCTURE
END BENT 1
WING DETAILS

7/19/2017
12:58:27 PM
User: blanning
Filename: P:\NC Bridges\MI6003_VHB_Div.1 Br. Repl. (4 Bridges)\MI6003.04_Hyde 8_B-5602\B-5602\Structures\401.031.B5602_SMU_EB1B.dgn