PROJECT REFERENCE NO.	SHEET NO.
B-5602	2A
ROADWAY DESIGN ENGINEER	PAVEMENT DESIGN ENGINEER

NORTH CAROLINA PROFESSIONAL SEAL 037874 ENGINEER TIMOTHY D. GOINS

Timothy D. Goins P.E.

Prepared by

vhb
940 Main Campus Drive, Suite 500
Raleigh, NC 27606
NC License No. C-3705

SUNGATE DESIGN GROUP, P.A.

FINAL PAVEMENT SCHEDULE

C1	PROP. APPROX. 3″ ASPHALT CONCRETE SURFACE COURSE, TYPE S9.5B, AT AN AVERAGE RATE OF 168 LBS. PER SQ. YD. IN EACH OF TWO LAYERS.
C2	PROP. VAR. DEPTH ASPHALT CONCRETE SURFACE COURSE, TYPE S9.5B, AT AN AVERAGE RATE OF 112 LBS. PER SQ. YD. PER 1″ DEPTH TO BE PLACED IN LAYERS NOT TO EXCEED 2″ IN DEPTH.
E1	PROP. APPROX. 5.5″ ASPHALT CONCRETE BASE COURSE, TYPE B25.0B, AT AN AVERAGE RATE OF 627 LBS. PER SQ. YD.
E2	PROP. VAR. DEPTH ASPHALT CONCRETE BASE COURSE, TYPE B25.0B AT AN AVERAGE RATE OF 114 LBS. PER SQ. YD. PER 1″ DEPTH TO BE PLACED IN LAYERS NOT LESS THAN 3″ IN DEPTH OR GREATER THAN 5½″ IN DEPTH.
T	EARTH MATERIAL
U	EXISTING PAVEMENT
W	VARIABLE DEPTH ASPHALT PAVEMENT (SEE WEDGING DETAIL)

NOTE: PAVEMENT EDGE SLOPES ARE 1:1 UNLESS SHOWN OTHERWISE.

MILLING AT PAVEMENT TIE–INS

NOTES TO CONTRACTOR

For surface mixes over 1″ in thickness, mill the existing pavement in accordance with the following sketch as directed by the Engineer.

Locations shall include ties into existing concrete pavement, at bridge approaches where the bridge will not be resurfaced, and at the beginning and ending point of each resurfacing map.

Perform the work in accordance with Section 607 of the January 2012 North Carolina Department of Transportation Standard Specifications for Roads and Structures. Resurfacing will be accomplished at the same time as the milling operation.

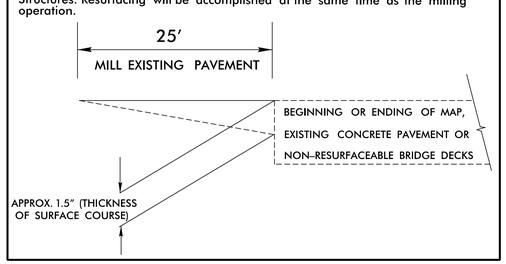

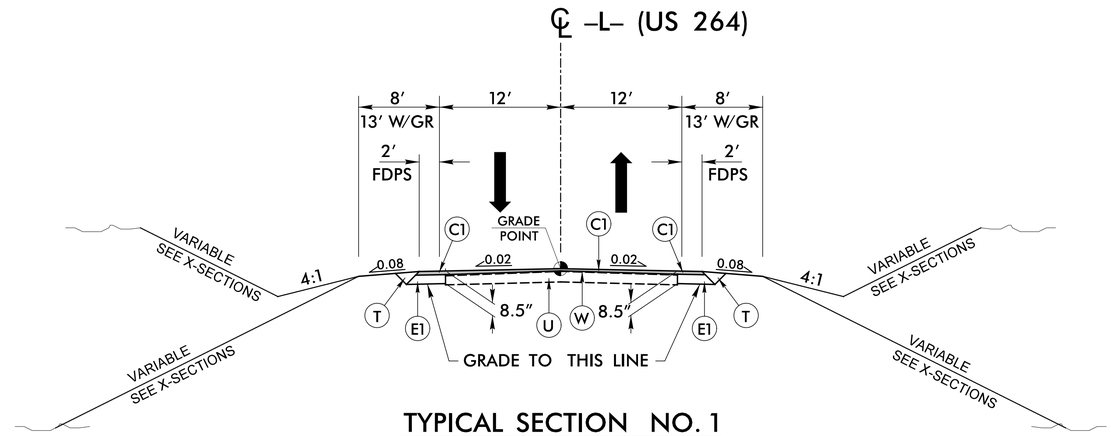

TYPICAL SECTION NO. 1

–L– STA. 10+50.00 TO STA. 14+25.00
–L– STA. 16+95.00 TO STA. 19+50.00

NOTE: FROM –L– STA. 10+50.00 TO STA. 10+75.00 AND –L– STA. 19+25.00 TO STA. 19+50.00, MILL 1.5″ AND WEDGE UP TO FINAL GRADE ELEVATION (SEE MILLING DETAIL THIS PAGE)

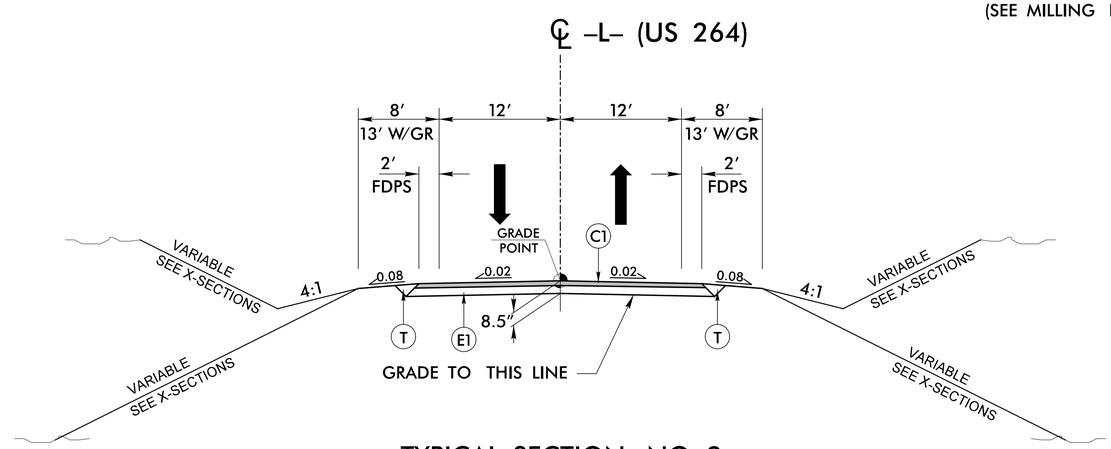

TYPICAL SECTION NO. 2

–L– STA. 14+25.00 TO STA. 14+49.48 (BEGIN BRIDGE)
–L– STA. 16+72.52 (END BRIDGE) TO STA. 16+95.00

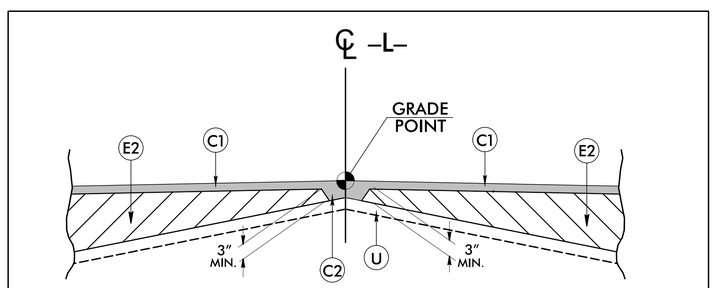

DETAIL SHOWING METHOD OF WEDGING ON –L–

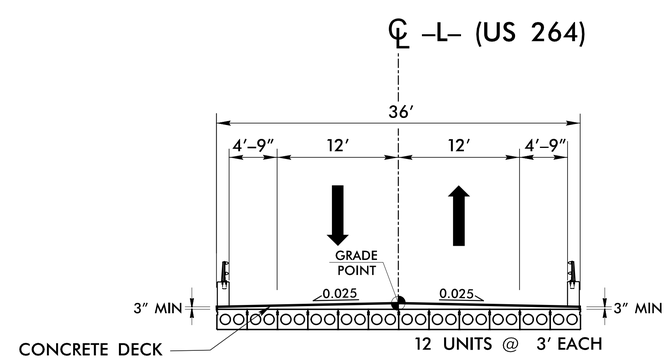

TYPICAL SECTION ON STRUCTURE

–L– STA. 14+49.48 (BEGIN BRIDGE) TO STA. 16+72.52 (END BRIDGE)

6/2/99

7/31/2017
B5602_rdy_typ.dgn
smimpost