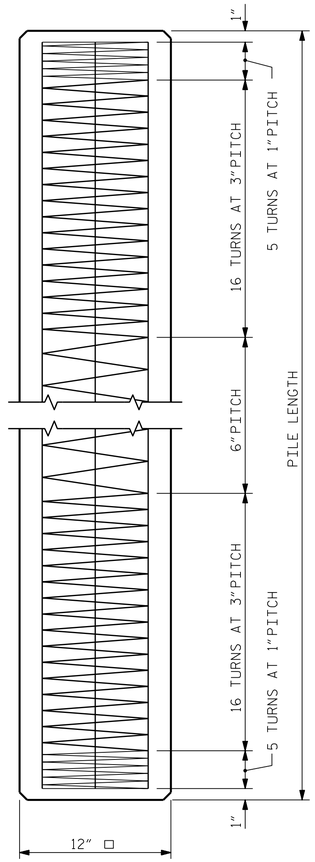

ELEVATION

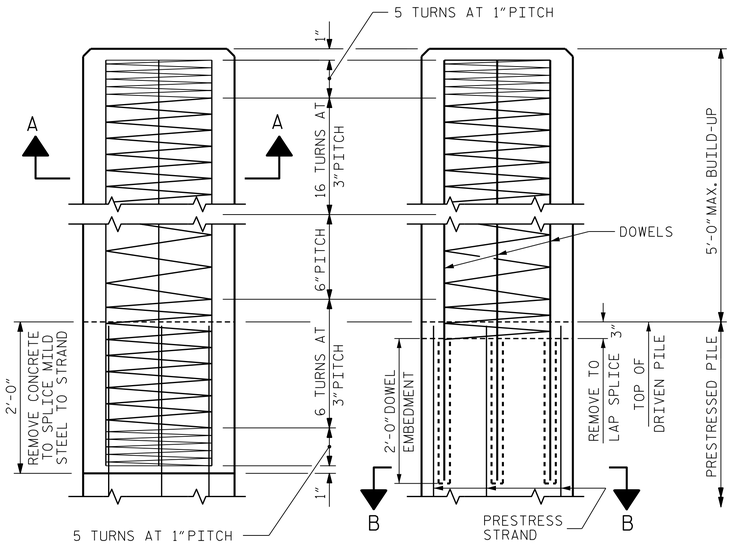

BUILD-UP AND SPIRAL REINFORCING

OPTIONAL BUILD-UP WITH DOWELS

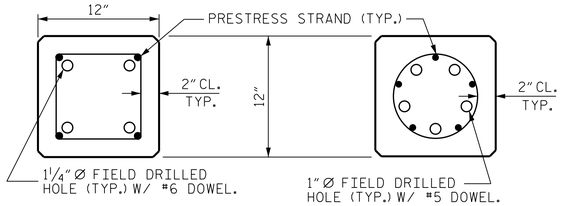

SECTION "B-B"

(AT THE CONTRACTOR'S OPTION, PILE BUILD-UP MAY BE CONSTRUCTED WITH DOWELS.)

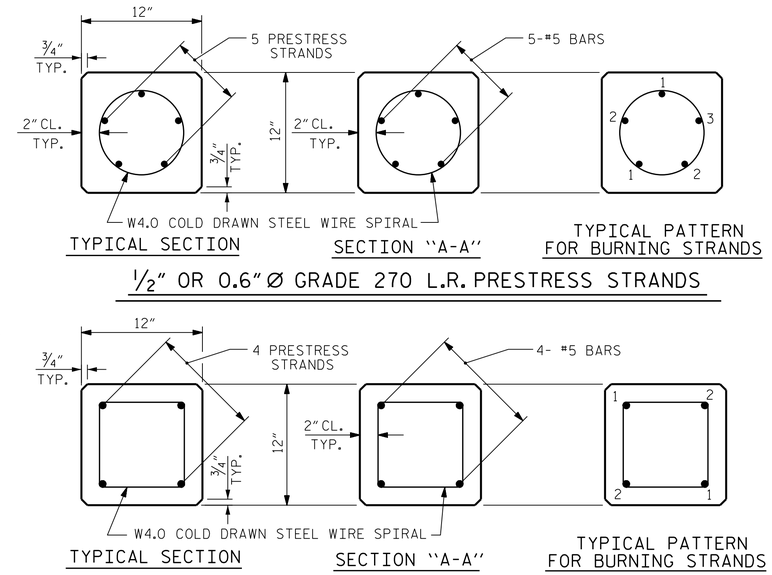

TYPICAL SECTION — SECTION "A-A" — TYPICAL PATTERN FOR BURNING STRANDS

½" OR 0.6" Ø GRADE 270 L.R. PRESTRESS STRANDS

TYPICAL SECTION — SECTION "A-A" — TYPICAL PATTERN FOR BURNING STRANDS

½" OR 0.6" Ø GRADE 270 L.R. PRESTRESS STRANDS

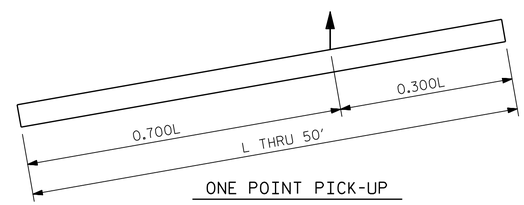

ONE POINT PICK-UP

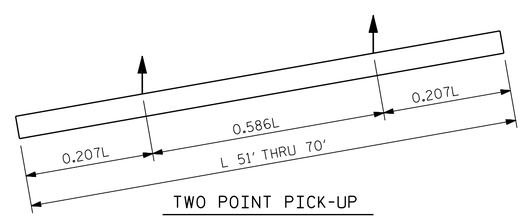

TWO POINT PICK-UP

PICK-UP POINTS

NOTES

PRESTRESSED CONCRETE STRENGTH : f'c = 7,500 PSI

BUILD-UP CONCRETE STRENGTH : f'c = 7,500 PSI

STRAND DATA:

SIZE	GRADE	AREA	ULTIMATE STRENGTH	APPLIED PRESTRESS FORCE
½"	270 L.R.	0.153	41,300# PER STRAND	30,980# PER STRAND
0.6"	270 L.R.	0.217	58,600# PER STRAND	43,940# PER STRAND

ALL PRESTRESSING STRANDS SHALL BE 7-WIRE LOW-RELAXATION GRADE 270 STRANDS CONFORMING TO AASHTO M203. STRAND SAMPLING REQUIREMENTS SHALL BE IN ACCORDANCE WITH THE STANDARD SPECIFICATIONS.

AT THE CONTRACTOR'S OPTION, ½" OR 0.6" STRANDS MAY BE USED IN EITHER THE 4 OR 5 STRAND CONFIGURATION SHOWN IN THE TYPICAL SECTION DETAIL. MIXING OF STRAND SIZE IS NOT ALLOWED.

THE SLIP-FORM METHOD OF CASTING PILES WILL NOT BE PERMITTED.

TRANSFER THE LOAD FROM THE ANCHORAGES TO THE PILE AFTER THE CONCRETE HAS ATTAINED A MINIMUM COMPRESSIVE STRENGTH OF 4,000 PSI.

IF STRAND STRESS IS RELIEVED BY BURNING, THE STRANDS SHALL BE BURNED IN PAIRS, EXCEPT WHERE 5 STRANDS ARE USED, THE LAST STRAND MAY BE BURNED SINGLY ACCORDING TO BURNING PATTERNS SHOWN. NOT MORE THAN 4 STRANDS MAY BE BURNED AT ANY ONE SECTION BEFORE THE SAME STRANDS ARE BURNED AT BOTH ENDS OF THE BED AND BETWEEN EACH PAIR OF PILES IN THE BED.

PROPOSED DEVICES FOR LIFTING PILES, RECESS DETAILS, AND PATCHING MATERIAL SHALL BE DETAILED IN SHOP DRAWINGS. AFTER ATTACHMENTS HAVE BEEN REMOVED, OPENINGS SHALL BE REPAIRED SUCH THAT THE APPEARANCE OF THE PILE IS UNIFORM.

WHERE CAST-IN-PLACE LIFTING DEVICES ARE NOT USED, PICK-UP POINTS ARE TO BE INDICATED WITH A 2" WIDE BLACK MARK.

DRIVE PILES USING A METHOD APPROVED BY THE ENGINEER, WHEREBY THE HEAD OF THE PILE IS NOT DAMAGED.

DRIVING OF THE BUILT-UP PILE WILL NOT BE PERMITTED UNTIL THE CONCRETE HAS REACHED A COMPRESSIVE STRENGTH OF 5,000 PSI AND UNTIL A PERIOD OF SEVEN DAYS HAS ELAPSED SINCE CASTING OF THE BUILD-UP.

THE WATER/CEMENT RATIO FOR CONCRETE PILES SHALL NOT EXCEED 0.40.

PRESTRESSED CONCRETE PILES SHALL CONTAIN CALCIUM NITRITE CORROSION INHIBITOR IN ACCORDANCE WITH THE STANDARD SPECIFICATIONS.

DOWEL INSTALLATION FOR OPTIONAL BUILD-UP

GROUT COMPRESSIVE STRENGTH: f'c = 5,000 PSI

BEFORE DRILLING DOWEL HOLES, REMOVE THE UPPER 3" OF CONCRETE FROM THE TOP OF THE PILE WITHOUT DAMAGE TO THE REINFORCING STEEL. THE REMOVAL PLANE SHOULD BE NORMAL TO THE EDGE OF THE PILE.

DOWEL HOLES SHALL BE POSITIONED TO MAINTAIN ½" CLEAR TO ALL EXISTING PRESTRESSING STRANDS IN THE CONCRETE PILE.

FIELD DRILLED HOLES SHALL BE CLEAN AND FREE OF ANY OBSTRUCTIONS BEFORE GROUTING OF DOWELS. DOWEL BARS SHALL BE INSTALLED AND GROUTED WITH AN APPROVED NON-SHRINK GROUT.

THE SPIRAL REINFORCING IN ALL BUILD-UPS SHALL BE W4.0 COLD DRAWN WIRE WHICH SHALL BE SECURED TO THE LONGITUDINAL REINFORCEMENT TO MAINTAIN PITCH.

THE SPIRAL REINFORCING IN THE BUILD-UP AND THE PRESTRESSED CONCRETE PILE SHALL BE SPLICED BY OVERLAPPING A MIN. OF ONE TURN.

PROJECT NO. B-5602

HYDE COUNTY

STATION: 15+61.00 -L-

QUANTITIES FOR ONE 12" PRESTRESSED PILE

LENGTH	CONCRETE CU. YDS.	PILE WT. TONS	ONE POINT PICK-UP 0.300L	ONE POINT PICK-UP 0.700L	TWO POINT PICK-UP 0.207L	TWO POINT PICK-UP 0.586L
25'-0"	0.91	1.85	7'-6"	17'-6"		
30'-0"	1.10	2.22	9'-0"	21'-0"		
35'-0"	1.28	2.59	10'-6"	24'-6"		
40'-0"	1.46	2.96	12'-0"	28'-0"		
45'-0"	1.64	3.33	13'-6"	31'-6"		
50'-0"	1.83	3.72	15'-0"	35'-0"		
55'-0"	2.01	4.09			11'-4½"	32'-3"
60'-0"	2.19	4.46			12'-5"	35'-2"
65'-0"	2.38	4.81			13'-5½"	38'-1"
70'-0"	2.57	5.18			14'-6"	41'-0"

NORTH CAROLINA PROFESSIONAL SEAL 24939 ENGINEER BYRON E. ATKINSON

7/19/2017

DOCUMENT NOT CONSIDERED FINAL UNLESS ALL SIGNATURES COMPLETED

MI ENGINEERING
1011 SCHAUB DRIVE, SUITE 100
RALEIGH, NC 27606
(919) 851-6606
FIRM PE NUMBER : P-0671

STATE OF NORTH CAROLINA
DEPARTMENT OF TRANSPORTATION
RALEIGH

STANDARD

12" PRESTRESSED CONCRETE PILE

REVISIONS						
NO.	BY:	DATE:	NO.	BY:	DATE:	
1			3			
2			4			

SHEET NO. S-27

TOTAL SHEETS 30

STD. NO. PCP1

ASSEMBLED BY:	B.E. LANNING	DATE:	06/17
CHECKED BY :	B.E. ATKINSON	DATE:	06/17
DESIGN ENGINEER OF RECORD:	B.E. ATKINSON	DATE:	06/17
DRAWN BY : FCJ 7/88	REV. 11/30/10		WMC/GM
CHECKED BY : CRK 3/89	REV. 10/1/11		MAA/GM
	REV. 12/14		MAA/TMG

7/19/2017
12:58:52 PM
User: blanning
Filename: P:\NC Bridges\MI6003_VHB_Div. 1 Br. Repl. (4 Bridges)\MI6003_04_Hyde 8_B-5602\B-5602\Structures\401_053_B5602_SMU_CPL1.dgn