09/08/99

TIP PROJECT: 17BP.1.R.58

See Sheet 1-A For Index of Sheets
See Sheet 1-B For Conventional Symbols

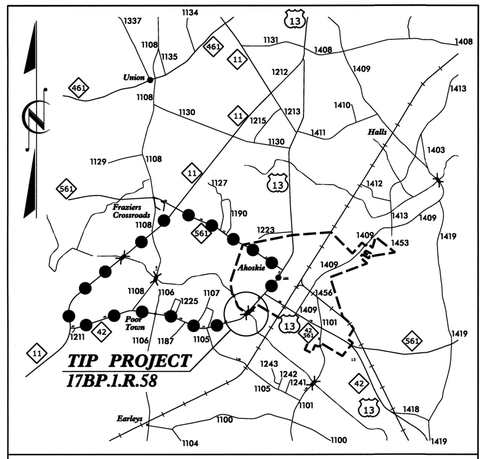

VICINITY MAP

OFF-SITE DETOUR

STATE OF NORTH CAROLINA
DIVISION OF HIGHWAYS

HERTFORD COUNTY

STATE	STATE PROJECT REFERENCE NO.	SHEET NO.	TOTAL SHEETS
N.C.	17BP.1.R.58	1	

STATE PROJ. NO.	F. A. PROJ. NO.	DESCRIPTION
17BP.1.R.58		PE
17BP.1.R.58		UTIL. & ROW
17BP.1.R.58		CONST.

LOCATION: BRIDGE NO. 33 OVER AHOSKIE CREEK ON NC 42 IN AHOSKIE

TYPE OF WORK: GRADING, DRAINAGE, PAVING & STRUCTURE

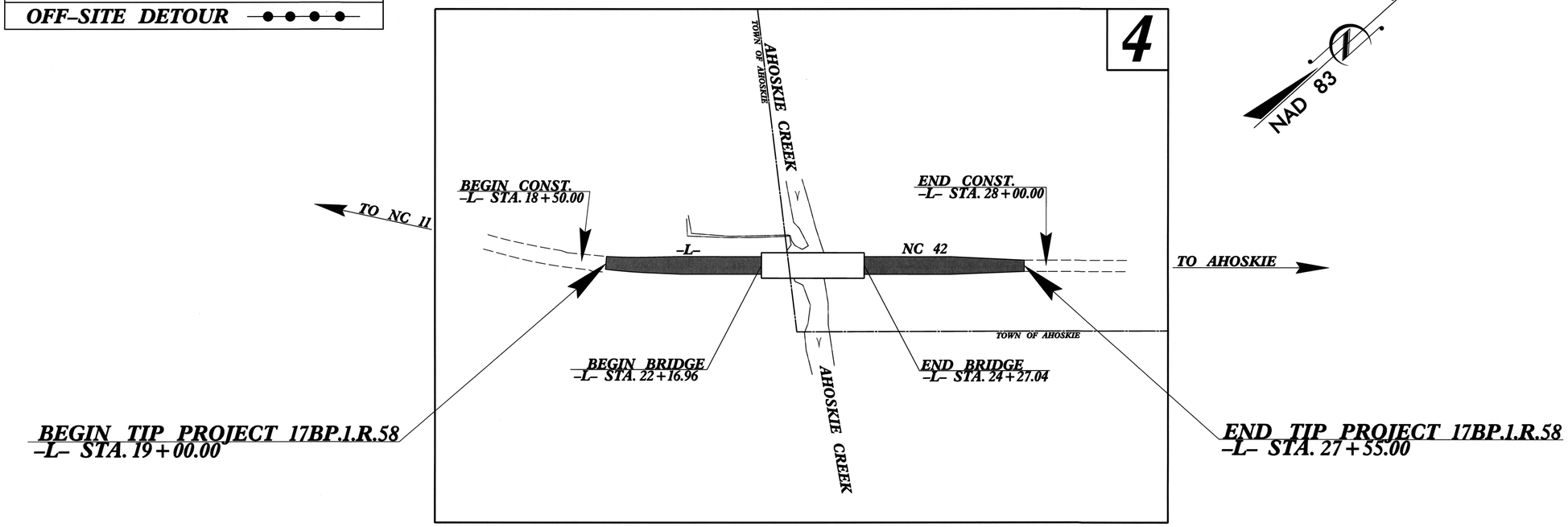

NAD 83

CONTRACT:

6/19/2014
10:57:29 AM
P:\2013\13131.01 Hertford #33\Roadway\Proj\17BP.1.R.58_Rdy_tsh.dgn

GRAPHIC SCALES

50 25 0 50 100
PLANS

50 25 0 50 100
PROFILE (HORIZONTAL)

10 5 0 10 20
PROFILE (VERTICAL)

DESIGN DATA

ADT 2011 = 8,400
ADT 2033 = 12,600
DHV = 10 %
D = 60 %
T = 7 % *
V = 50 MPH
* TTST = 3% DUAL 4%
FUNC CLASS =
MAJOR COLLECTOR
REGIONAL TIER

PROJECT LENGTH

LENGTH ROADWAY TIP PROJECT 17BP.1.R.58	=	0.122 MILES
LENGTH STRUCTURE TIP PROJECT 17BP.1.R.58	=	0.040 MILES
TOTAL LENGTH TIP PROJECT 17BP.1.R.58	=	0.162 MILES

WETHERILL ENGINEERING

Prepared for the North Carolina Department of Transportation in the Office of:
559 JONES FRANKLIN ROAD
SUITE 164
Raleigh, N.C. 27606
License No. F-0377
Bus: 919 851 8077
Fax: 919 851 8107

2012 STANDARD SPECIFICATIONS

RIGHT OF WAY DATE:

LETTING DATE:

NCDOT CONTACT:

EDWARD G. WETHERILL, PE
PROJECT ENGINEER

BOB A. MAY, PE
PROJECT DESIGN ENGINEER

JOHN S. ABEL, JR.
DIVISION 1 BRIDGE PROGRAM MANAGER

HYDRAULICS ENGINEER

NORTH CAROLINA PROFESSIONAL SEAL 23454 ENGINEER ANNE D. GAMBER

SIGNATURE: Anne D Gamber 7/7/14 P.E.

ROADWAY DESIGN ENGINEER

NORTH CAROLINA PROFESSIONAL SEAL 21116 ENGINEER BOB A. MAY

SIGNATURE: Bob A May 7/7/14

STATE OF NORTH CAROLINA DEPARTMENT OF TRANSPORTATION

PROJECT REFERENCE NO.	SHEET NO.
17BP.J.R.58	1-A

ROADWAY DESIGN ENGINEER

NORTH CAROLINA PROFESSIONAL SEAL 21116 ENGINEER BOB A. MAY 9/7/14

GENERAL NOTES: 2012 SPECIFICATIONS

EFFECTIVE: 01-17-2012
REVISED: 07-30-2012

GRADING AND SURFACING OR RESURFACING AND WIDENING:

THE GRADE LINES SHOWN DENOTE THE FINISHED ELEVATION OF THE PROPOSED SURFACING AT GRADE POINTS SHOWN ON THE TYPICAL SECTIONS. WHERE NO GRADE LINES ARE SHOWN, THE PROFILES SHOWN DENOTE THE TOP ELEVATION OF THE EXISTING PAVEMENT ALONG THE CENTER LINE OF SURVEY ON WHICH THE PROPOSED RESURFACING WILL BE PLACED. GRADE LINES MAY BE ADJUSTED BY THE ENGINEER IN ORDER TO SECURE A PROPER TIE-IN.

CLEARING:

CLEARING ON THIS PROJECT SHALL BE PERFORMED TO THE LIMITS ESTABLISHED BY METHOD II.

SUPERELEVATION:

ALL CURVES ON THIS PROJECT SHALL BE SUPERELEVATED IN ACCORDANCE WITH STD. NO. 225.04 AND/OR STD. NO. 225.05 USING THE RATE OF SUPERELEVATION AND RUNOFF SHOWN ON THE PLANS. SUPERELEVATION IS TO BE REVOLVED ABOUT THE GRADE POINTS SHOWN ON THE TYPICAL SECTIONS.

SHOULDER CONSTRUCTION:

ASPHALT, EARTH, AND CONCRETE SHOULDER CONSTRUCTION ON THE HIGH SIDE OF SUPERELEVATED CURVES SHALL BE IN ACCORDANCE WITH STD. NO. 560.01 AND/OR STD. NO. 560.02

SIDE ROADS:

THE CONTRACTOR WILL BE REQUIRED TO DO ALL NECESSARY WORK TO PROVIDE SUITABLE CONNECTIONS WITH ALL ROADS, STREETS, AND DRIVES ENTERING THIS PROJECT. THIS WORK WILL BE PAID FOR AT THE CONTRACT UNIT PRICE FOR THE PARTICULAR ITEMS INVOLVED.

UNDERDRAINS:

UNDERDRAINS SHALL BE CONSTRUCTED IN ACCORDANCE WITH STD. NO. 815.03 AT LOCATIONS DIRECTED BY THE ENGINEER.

GUARDRAIL:

THE GUARDRAIL LOCATIONS SHOWN ON THE PLANS MAY BE ADJUSTED DURING CONSTRUCTION AS DIRECTED BY THE ENGINEER. THE CONTRACTOR SHOULD CONSULT WITH THE ENGINEER PRIOR TO ORDERING GUARDRAIL MATERIAL.

TEMPORARY SHORING:

SHORING REQUIRED FOR THE MAINTENANCE OF TRAFFIC WILL BE PAID FOR AS "EXTRA WORK" IN ACCORDANCE WITH SECTION 104-7.

SUBSURFACE PLANS:

NO SUBSURFACE PLANS ARE AVAILABLE ON THIS PROJECT. THE CONTRACTOR SHOULD MAKE HIS OWN INVESTIGATION AS TO THE SUBSURFACE CONDITIONS.

END BENTS:

THE ENGINEER SHALL CHECK THE STRUCTURE END BENT PLANS, DETAILS, AND CROSS-SECTION PRIOR TO SETTING OF THE SLOPE STAKES FOR THE EMBANKMENT OR EXCAVATION APPROACHING A BRIDGE.

UTILITIES:

UTILITY OWNERS ON THIS PROJECT ARE VIRGINIA ELECTRIC & POWER COMPANY, CENTURY LINK, PIEDMONT NATURAL GAS COMPANY AND TOWN OF AHOSKIE.

ANY RELOCATION OF EXISTING UTILITIES WILL BE ACCOMPLISHED BY OTHERS.

EFF. 01-17-2012
REV. 10-30-2012

2012 ROADWAY ENGLISH STANDARD DRAWINGS

The following Roadway Standards as appear in "Roadway Standard Drawings" Highway Design Branch – N. C. Department of Transportation – Raleigh, N. C., Dated January, 2012 are applicable to this project and by reference hereby are considered a part of these plans:

STD.NO.	TITLE
DIVISION 2 – EARTHWORK	
200.02	Method of Clearing – Method II
225.02	Guide for Grading Subgrade – Secondary and Local
225.04	Method of Obtaining Superelevation – Two Lane Pavement
DIVISION 3 – PIPE CULVERTS	
300.01	Method of Pipe Installation
DIVISION 4 – MAJOR STRUCTURES	
422.10	Reinforced Bridge Approach Fills
DIVISION 5 – SUBGRADE, BASES AND SHOULDERS	
560.01	Method of Shoulder Construction – High Side of Superelevated Curve – Method I
DIVISION 6 – ASPHALT BASES AND PAVEMENTS	
654.01	Pavement Repairs
DIVISION 8 – INCIDENTALS	
815.03	Pipe Underdrain and Blind Drain
840.00	Concrete Base Pad for Drainage Structures
840.04	Concrete Open Throat Catch Basin – 12" thru 48" Pipe
840.05	Brick Open Throat Catch Basin – 12" thru 48" Pipe
840.18	Concrete Grated Drop Inlet Type 'B' – 12" thru 36" Pipe
840.19	Concrete Grated Drop Inlet Type 'D' – 12" thru 36" Pipe
840.24	Frames and Narrow Slot Sag Grates
840.27	Brick Grated Drop Inlet Type 'B' – 12" thru 36" Pipe
840.28	Brick Grated Drop Inlet Type 'D' – 12" thru 36" Pipe
840.29	Frames and Narrow Slot Flat Grates
840.31	Concrete Junction Box – 12" thru 66" Pipe
840.32	Brick Junction Box – 12" thru 66" Pipe
840.45	Precast Drainage Structure
840.54	Manhole Frame and Cover
846.01	Concrete Curb, Gutter and Curb & Gutter
862.01	Guardrail Placement
862.02	Guardrail Installation
876.02	Guide for Rip Rap at Pipe Outlets

INDEX OF SHEETS

SHEET NUMBER	SHEET
1	TITLE SHEET
1-A	INDEX OF SHEETS, GENERAL NOTES, AND LIST OF STANDARD DRAWINGS
1-B	CONVENTIONAL SYMBOLS
2	PAVEMENT SCHEDULE, TYPICAL SECTIONS, AND WEDGING DETAIL
2-A	DETAIL FOR STRUCTURE ANCHOR UNIT, TYPE III
3	SUMMARY OF QUANTITIES
3-A	SUMMARY OF DRAINAGE QUANTITIES, SUMMARY OF GUARDRAIL, EARTHWORK SUMMARY, AND ASPHALT PAVEMENT REMOVAL SUMMARY
4	PLAN SHEET & PROFILE SHEET
TCP-1 THRU TCP-?	TRAFFIC CONTROL PLANS
RF-1	REFORESTATION PLANS
EC-1 THRU EC-5	EROSION CONTROL PLANS
X-1A	CROSS-SECTION SUMMARY
X-1 THRU X-5	CROSS-SECTIONS
S-1 THRU S-32	STRUCTURE PLANS
	STANDARD STRUCTURE NOTES

6/19/2014 10:56:37 AM
P:\2013\13131.01 Hertford #33\Roadway\Proj\17BP.J.R.58_Rdy_tsh.dgn

12/05/11

PROJECT REFERENCE NO.	SHEET NO.
17BPJR.58	1-B

Note: Not to Scale

****S.U.E. = Subsurface Utility Engineering***

STATE OF NORTH CAROLINA
DIVISION OF HIGHWAYS

CONVENTIONAL PLAN SHEET SYMBOLS

BOUNDARIES AND PROPERTY:

- State Line
- County Line
- Township Line
- City Line
- Reservation Line
- Property Line
- Existing Iron Pin — EIP
- Property Corner
- Property Monument — ECM
- Parcel/Sequence Number — 123
- Existing Fence Line
- Proposed Woven Wire Fence
- Proposed Chain Link Fence
- Proposed Barbed Wire Fence
- Existing Wetland Boundary — WLB
- Proposed Wetland Boundary — WLB
- Existing Endangered Animal Boundary — EAB
- Existing Endangered Plant Boundary — EPB
- Known Soil Contamination: Area or Site
- Potential Soil Contamination: Area or Site

BUILDINGS AND OTHER CULTURE:

- Gas Pump Vent or U/G Tank Cap
- Sign — S
- Well — W
- Small Mine
- Foundation
- Area Outline
- Cemetery
- Building
- School
- Church
- Dam

HYDROLOGY:

- Stream or Body of Water
- Hydro, Pool or Reservoir
- Jurisdictional Stream — JS
- Buffer Zone 1 — BZ 1
- Buffer Zone 2 — BZ 2
- Flow Arrow
- Disappearing Stream
- Spring
- Wetland
- Proposed Lateral, Tail, Head Ditch — FLOW
- False Sump

RAILROADS:

- Standard Gauge — CSX TRANSPORTATION
- RR Signal Milepost — MILEPOST 35
- Switch — SWITCH
- RR Abandoned
- RR Dismantled

RIGHT OF WAY:

- Baseline Control Point
- Existing Right of Way Marker
- Existing Right of Way Line
- Proposed Right of Way Line — RW
- Proposed Right of Way Line with Iron Pin and Cap Marker — RW
- Proposed Right of Way Line with Concrete or Granite R/W Marker — RW
- Proposed Control of Access Line with Concrete C/A Marker — CA
- Existing Control of Access — CA
- Proposed Control of Access — CA
- Existing Easement Line — E
- Proposed Temporary Construction Easement — E
- Proposed Temporary Drainage Easement — TDE
- Proposed Permanent Drainage Easement — PDE
- Proposed Permanent Drainage / Utility Easement — DUE
- Proposed Permanent Utility Easement — PUE
- Proposed Temporary Utility Easement — TUE
- Proposed Aerial Utility Easement — AUE
- Proposed Permanent Easement with Iron Pin and Cap Marker

ROADS AND RELATED FEATURES:

- Existing Edge of Pavement
- Existing Curb
- Proposed Slope Stakes Cut — C
- Proposed Slope Stakes Fill — F
- Proposed Curb Ramp — CR
- Existing Metal Guardrail
- Proposed Guardrail
- Existing Cable Guiderail
- Proposed Cable Guiderail
- Equality Symbol
- Pavement Removal

VEGETATION:

- Single Tree
- Single Shrub
- Hedge
- Woods Line
- Orchard
- Vineyard — Vineyard

EXISTING STRUCTURES:

MAJOR:

- Bridge, Tunnel or Box Culvert — CONC
- Bridge Wing Wall, Head Wall and End Wall — CONC WW

MINOR:

- Head and End Wall — CONC HW
- Pipe Culvert
- Footbridge
- Drainage Box: Catch Basin, DI or JB — CB
- Paved Ditch Gutter
- Storm Sewer Manhole — S
- Storm Sewer — S

UTILITIES:

POWER:

- Existing Power Pole
- Proposed Power Pole
- Existing Joint Use Pole
- Proposed Joint Use Pole
- Power Manhole — P
- Power Line Tower
- Power Transformer
- U/G Power Cable Hand Hole
- H-Frame Pole
- Recorded U/G Power Line — P
- Designated U/G Power Line (S.U.E.*) — P

TELEPHONE:

- Existing Telephone Pole
- Proposed Telephone Pole
- Telephone Manhole — T
- Telephone Booth
- Telephone Pedestal — T
- Telephone Cell Tower
- U/G Telephone Cable Hand Hole — HH
- Recorded U/G Telephone Cable — T
- Designated U/G Telephone Cable (S.U.E.*) — T
- Recorded U/G Telephone Conduit — TC
- Designated U/G Telephone Conduit (S.U.E.*) — TC
- Recorded U/G Fiber Optics Cable — T FO
- Designated U/G Fiber Optics Cable (S.U.E.*) — T FO

WATER:

- Water Manhole — W
- Water Meter
- Water Valve
- Water Hydrant
- Recorded U/G Water Line — W
- Designated U/G Water Line (S.U.E.*) — W
- Above Ground Water Line — A/G Water

TV:

- TV Satellite Dish
- TV Pedestal — C
- TV Tower
- U/G TV Cable Hand Hole — HH
- Recorded U/G TV Cable — TV
- Designated U/G TV Cable (S.U.E.*) — TV
- Recorded U/G Fiber Optic Cable — TV FO
- Designated U/G Fiber Optic Cable (S.U.E.*) — TV FO

GAS:

- Gas Valve
- Gas Meter
- Recorded U/G Gas Line — G
- Designated U/G Gas Line (S.U.E.*) — G
- Above Ground Gas Line — A/G Gas

SANITARY SEWER:

- Sanitary Sewer Manhole
- Sanitary Sewer Cleanout
- U/G Sanitary Sewer Line — SS
- Above Ground Sanitary Sewer — A/G Sanitary Sewer
- Recorded SS Forced Main Line — FSS
- Designated SS Forced Main Line (S.U.E.*) — FSS

MISCELLANEOUS:

- Utility Pole
- Utility Pole with Base
- Utility Located Object
- Utility Traffic Signal Box — S
- Utility Unknown U/G Line — ?UTL
- U/G Tank; Water, Gas, Oil
- Underground Storage Tank, Approx. Loc. — UST
- A/G Tank; Water, Gas, Oil
- Geoenvironmental Boring
- U/G Test Hole (S.U.E.*)
- Abandoned According to Utility Records — AATUR
- End of Information — E.O.I.

PAVEMENT SCHEDULE

FINAL PAVEMENT DESIGN

C1	PROP. APPROX. 3" ASPHALT CONCRETE SURFACE COURSE, TYPE S9.5B, AT AN AVERAGE RATE OF 168 LBS. PER SQ. YD. IN EACH OF TWO LAYERS.	E2	PROP. VAR. DEPTH ASPHALT CONCRETE BASE COURSE, TYPE B25.0B, AT AN AVERAGE RATE OF 114 LBS. PER SQ. YD. PER 1" DEPTH. TO BE PLACED IN LAYERS NOT LESS THAN 3" IN DEPTH OR GREATER THAN 5½" IN DEPTH.
C2	PROP. VAR. DEPTH ASPHALT CONCRETE SURFACE COURSE, TYPE S9.5B, AT AN AVERAGE RATE OF 112 LBS. PER SQ. YD. PER 1" DEPTH. TO BE PLACED IN LAYERS NOT TO EXCEED 2" IN DEPTH.	T	EARTH MATERIAL.
D1	PROP. APPROX. 2½" ASPHALT CONCRETE INTERMEDIATE COURSE, TYPE I19.0B, AT AN AVERAGE RATE OF 285 LBS. PER SQ. YD.	U	EXISTING PAVEMENT.
D2	PROP. VAR. DEPTH ASPHALT CONCRETE INTERMEDIATE COURSE, TYPE I19.0B, AT AN AVERAGE RATE OF 114 LBS. PER SQ. YD. PER 1" DEPTH, TO BE PLACED IN LAYERS NOT LESS THAN 2½" IN DEPTH OR GREATER THAN 4" IN DEPTH.	W	VARIABLE DEPTH ASPHALT PAVEMENT (SEE STANDARD WEDGING DETAIL)
E1	PROP. APPROX. 4" ASPHALT CONCRETE BASE COURSE, TYPE B25.0B, AT AN AVERAGE RATE OF 456 LBS. PER SQ. YD.		

NOTE: PAVEMENT EDGE SLOPES ARE 1:1 UNLESS SHOWN OTHERWISE.

NOTE: UTILIZE INCIDENTAL MILLING TO MAKE PAVEMENT TIE-INS
-L- STA. 19+00.00 TO -L- STA. 20+15.35
-L- STA. 26+85.74 TO -L- STA. 27+55.00

FDPS = FULL DEPTH PAVED SHOULDER

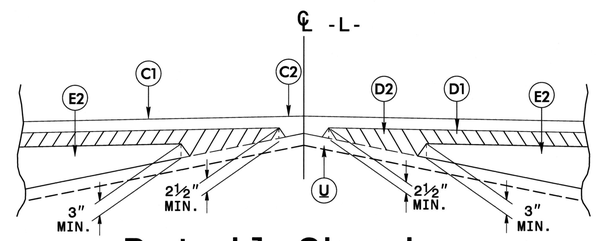

Detail Showing Method of Wedging

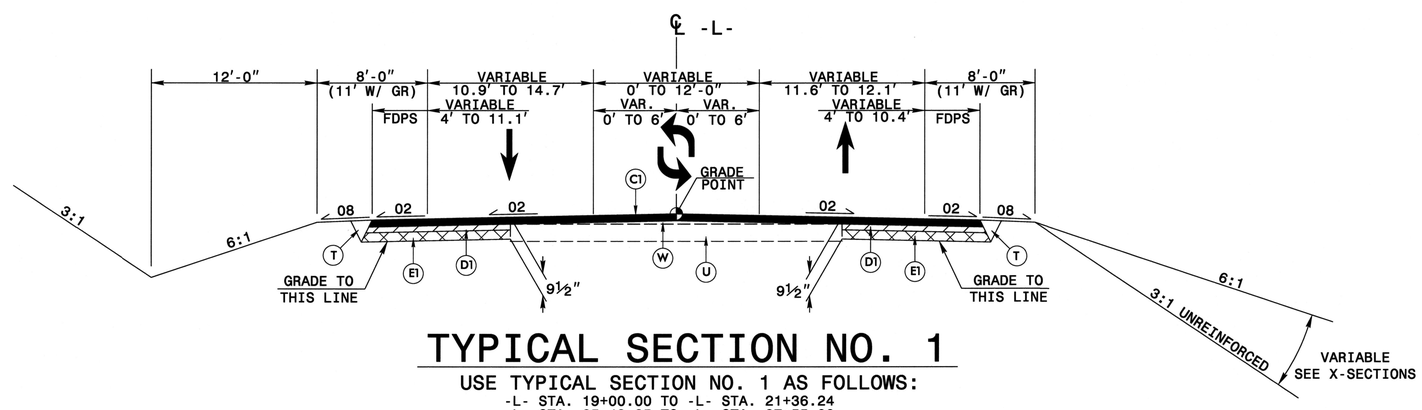

TYPICAL SECTION NO. 1

USE TYPICAL SECTION NO. 1 AS FOLLOWS:
-L- STA. 19+00.00 TO -L- STA. 21+36.24
-L- STA. 25+43.25 TO -L- STA. 27+55.00

PROJECT REFERENCE NO.	SHEET NO.
17BP.1.R.58	2

ROADWAY DESIGN ENGINEER

PAVEMENT DESIGN ENGINEER

NORTH CAROLINA PROFESSIONAL SEAL 21116 ENGINEER BOB A. MAY 7/7/14

WETHERILL ENGINEERING
559 Jones Franklin Rd. Suite 164
Raleigh, N.C. 27606
License No. F-0377
Bus: 919 851 8077
Fax: 919 851 8107

TRANSPORTATION PLANNING/DESIGN - BRIDGE/STRUCTURE DESIGN
CIVIL/SITE DESIGN - GIS/GPS - CONSTRUCTION OBSERVATION

6/2/99
6/13/2014 10:52:03 AM
P:\2013\13131.01 Hertford #33\Roadway\Proj\17BP.1.R.58 Rdy typ.dgn

PROJECT REFERENCE NO.	SHEET NO.
17BP.1.R.58	2-A
ROADWAY DESIGN ENGINEER	PAVEMENT DESIGN ENGINEER

NORTH CAROLINA PROFESSIONAL SEAL 21176 ENGINEER BOB A. MAY 9/7/14

WETHERILL ENGINEERING
559 Jones Franklin Rd. Suite 164
Raleigh, N.C. 27606
License No. F-0377
Bus: 919 851 8077
Fax: 919 851 8107
TRANSPORTATION PLANNING/DESIGN - BRIDGE/STRUCTURE DESIGN
CIVIL/SITE DESIGN - GIS/GPS - CONSTRUCTION OBSERVATION

PAVEMENT SCHEDULE
(FINAL PAVEMENT DESIGN)

C1	3" S9.5B
C2	VAR. S9.5
D1	2½" I19.0B
D2	VAR. I19.0B
E1	4" B25.0B
E2	VAR. B25.0B
T	EARTH MATERIAL
U	EXIST. PAVEMENT
W	WEDGING

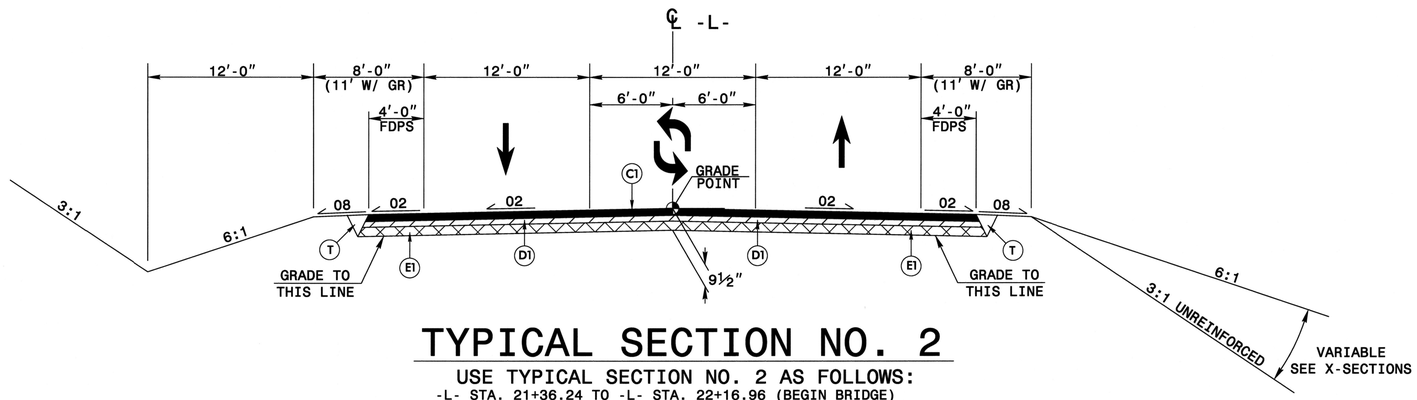

TYPICAL SECTION NO. 2

USE TYPICAL SECTION NO. 2 AS FOLLOWS:
-L- STA. 21+36.24 TO -L- STA. 22+16.96 (BEGIN BRIDGE)
-L- STA. 24+27.04 (END BRIDGE) TO -L- STA. 25+43.25

DETAIL 1
SPECIAL CUT BASE DITCH
(Not to Scale)

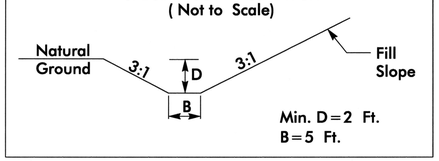

FROM STA. 19+00 TO STA. 20+45 LT.

DETAIL 3
ROCK PLATING
(Not to Scale)

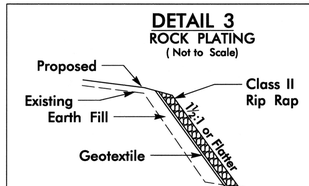

FROM STA. 20+50 TO STA. 22+00 LT.

DETAIL 2

PREFORMED SCOUR HOLE
*NOT TO SCALE

PLAN VIEW

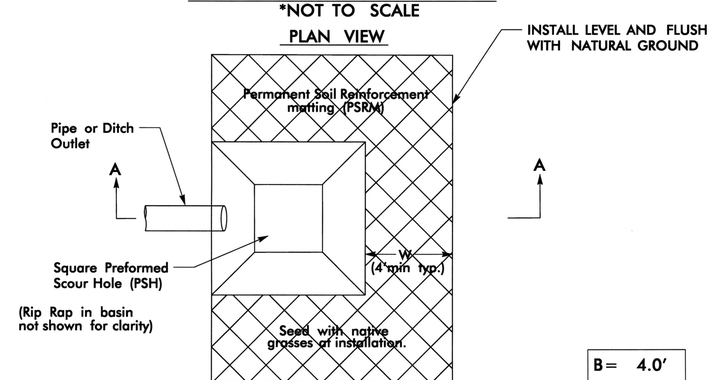

B= 4.0'
D= 1.5'
W= 4.0'

SECTION A-A

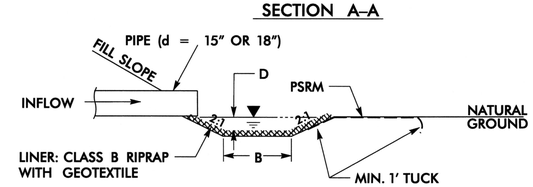

3/08

FROM STA. 24+18 -L- RT

6/2/99

6/19/2014
1:02:04 PM
J:\2013\13131.01 Hertford #33\Roadway\Proj\17BP.1.R.58_Rdy_typ.dgn

$$$$$$$SYSTIME$$$$$
$$$$$$$$$$$$$$$$$$DGN$$$$$$$$$$$$$$$$
$$$$USERNAME$$$$

STATE OF NORTH CAROLINA
DEPT. OF TRANSPORTATION
DIVISION OF HIGHWAYS
RALEIGH, N.C.

ENGLISH DETAIL DRAWING FOR
STRUCTURE ANCHOR UNITS
GUARDRAIL ANCHOR UNIT, TYPE III FOR ATTACHMENT TO RAIL ON BRIDGE - SUB REGIONAL TIER

SHEET 2 OF 7
862d03

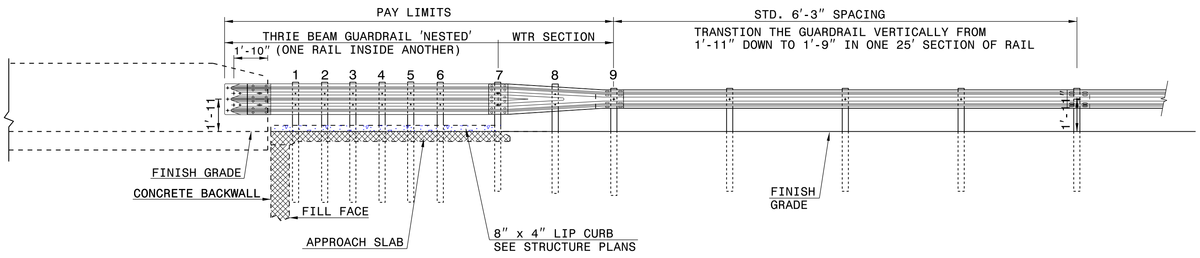

ELEVATION

NOTE:
**POST NOT REQUIRED FOR SKEW ANGLES GREATER THAN 150° OR LESS THAN 30° UNLESS OTHERWISE DIRECTED BY THE ENGINEER.
*THE DISTANCE FROM END OF BRIDGE RAIL TO CENTER LINE OF THE FIRST POST SHOULD BE 11½" IF CONCRETE BACKWALL IS NOT PRESENT.
-SHOULDER BERM GUTTER MUST BE INSTALLED TO THE LIMITS 8" x 4" LIP CURB IS SHOWN IF ANCHOR UNIT IS NOT ADJACENT TO AN APPROACH SLAB.
-MEASURE GUARDRAIL HEIGHT FROM THE TOP OF ADJACENT SURFACE (SHOULDER, BERM, OR GUTTER).
-LAP JOINTS IN THE DIRECTION OF TRAFFIC FLOW.
-SEE SHEET 5 FOR POST SECTIONS 1 THRU 9.

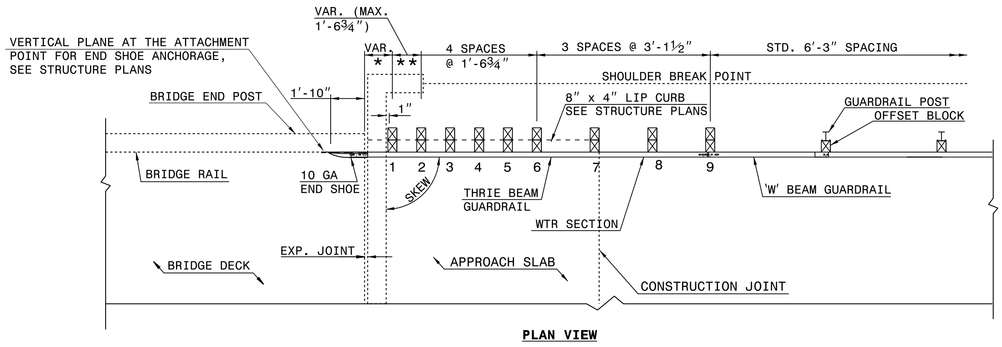

PLAN VIEW

GUARDRAIL ANCHOR UNIT, TYPE III FOR ATTACHMENT TO RAIL ON BRIDGE - SUB REGIONAL TIER

STATE OF NORTH CAROLINA
DEPT. OF TRANSPORTATION
DIVISION OF HIGHWAYS
RALEIGH, N.C.

ENGLISH DETAIL DRAWING FOR
STRUCTURE ANCHOR UNITS
GUARDRAIL ANCHOR UNIT, TYPE III FOR ATTACHMENT TO RAIL ON BRIDGE - SUB REGIONAL TIER

SHEET 2 OF 7
862d03

STATE OF NORTH CAROLINA
DEPT. OF TRANSPORTATION
DIVISION OF HIGHWAYS
RALEIGH, N.C.

ENGLISH DETAIL DRAWING FOR
STRUCTURE ANCHOR UNITS
GUARDRAIL ANCHOR UNIT, TYPE III

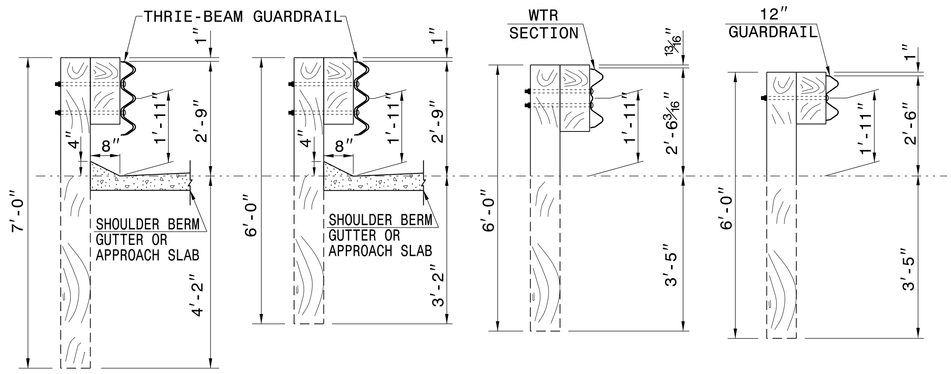

SECTION OF THRIE BEAM POSTS 1 THRU 6

SECTION OF THRIE BEAM POST 7

SECTION OF WTR BEAM POST 8

SECTION OF 'W' BEAM POST 9

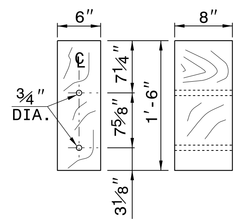

THRIE BEAM OFFSET BLOCK

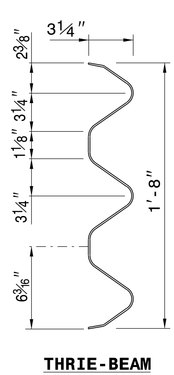

THRIE-BEAM SECTION

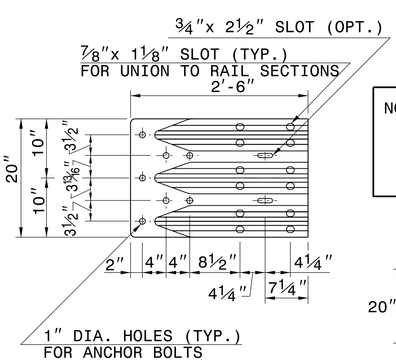

END SHOE

NOTE: THE MID POST AND OFFSET BLOCK OF THE WTR SECTION WILL REQUIRE SPECIAL BOLT HOLE DRILLING IN THE THRIE BEAM OFFSET BLOCK AND LINE POST.

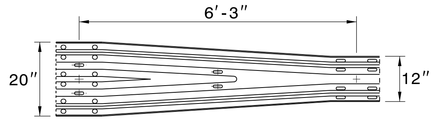

WTR SECTION
ELEVATION VIEW

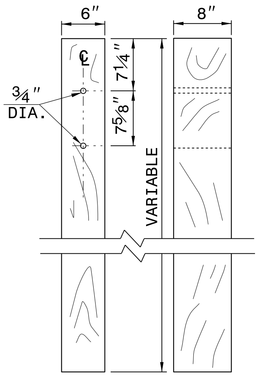

THRIE BEAM LINE POST

STATE OF NORTH CAROLINA
DEPT. OF TRANSPORTATION
DIVISION OF HIGHWAYS
RALEIGH, N.C.

ENGLISH DETAIL DRAWING FOR
STRUCTURE ANCHOR UNITS
GUARDRAIL ANCHOR UNIT, TYPE III

SHEET 3 OF 7
862d03

CONTRACT STANDARDS AND DEVELOPMENT UNIT
Office 919-707-6950 FAX 919-250-4119

SEE TITLE BLOCK

ORIGINAL BY: J. HOWERTON DATE: 06-22-12
MODIFIED BY: DATE:
CHECKED BY: DATE:
FILE SPEC.:

PROJECT REFERENCE NO. 17BP.1.R.58
SHEET NO. 2-B

PROJECT REFERENCE NO.	SHEET NO.
17BP.1.R.58	3

STATE OF NORTH CAROLINA
DIVISION OF HIGHWAYS

SUMMARY OF QUANTITIES

ITEM #	SECT. #	DESCRIPTION	QUANTITY	UNIT
0000400000–N	801	Construction Surveying	1.00	LS
0063000000–N	SP	Grading	1.00	LS
0029000000–N	SP	Reinfirced Bridge Approach Fill, Station 23+22.00	1.00	LS
0050000000–E	226	Supplemental Clearing & Grubbing	1.00	AC
0057000000–E	226	Undercut Excavation	50.00	CY
0106000000–E	230	Borrow Excavation	3300.00	CY
1099700000–E	505	Class IV Subgrade Stabilization	70.00	TON
0196000000–E	270	Geotextile for Soil Stabilization	175.00	SY
0318000000–E	300	Foundation Conditioning Material	40.00	TON
0320000000–E	300	Foundation Conditioning Geotextile	120.00	SY
0335300000–E	305	18" Drainage Pipe	100.00	LF
0448200000–E	310	15" RC Pipe Culvert, Class IV	156.00	LF
0448300000–E	310	18" RC Pipe Culvert, Class IV	104.00	LF
0995000000–E	340	Pipe Removal	172.00	LF
1220000000–E	545	Incidental Stone Base	120.00	TON
1330000000–E	607	Incidental Milling	525.00	SY
1489000000–E	610	Apshalt Conc. Base Course, Type B25.0B	1680.00	TON
1498000000–E	610	Asphalt Conc. Intermediate Course, Type I19.0B	410.00	TON
1519000000–E	610	Asphalt Conc. Surface Course, Type S9.5B	530.00	TON
1575000000–E	620	Asphalt Binder for Plant Mix	130.00	TON
2022000000–E	815	Subdrain Excavation	23.00	CY
2026000000–E	815	Geotextile for Subsurface Drains	100.00	SY
2036000000–E	815	Subdrain Course Aggregate	17.00	CY
2044000000–E	815	6" Perforated Subdrain Pipe	100.00	LF
2070000000–N	815	Subdrain Pipe Outlet	1.00	EACH
2077000000–E	815	6" Outlet Pipe	6.00	LF
2286000000–N	840	Masonry Drainage Structures	8.00	EACH
2366000000–N	840	Frame w/Two Grates, STD. 840.24	2.00	EACH
2367000000–N	840	Frame w/Two Grates, STD. 840.29	4.00	EACH
2396000000–N	840	Frame with Cover, Std. 840.54	2.00	EACH
2556000000–E	846	Shoulder Berm Gutter	80.00	LF
3030000000–E	862	Steel Bm Guardrail	250.00	LF
3045000000–E	862	Steel BM Guardrail, Shop Curved	37.50	LF
3150000000–N	862	Additional Guardrail Posts	5.00	EACH
3215000000–N	862	Guardrail Anchor Unit. Type III	4.00	EACH
3270000000–N	SP	Guardrail Anchor Unit, Type 350 TL–3	3.00	EACH
3195000000–N	862	Guardrail Anchor Unit, Type AT–1	1.00	EACH
3628000000–E	876	Class I Rip Rap	7.00	TON
3635000000–E	876	Class II Rip Rap	270.00	TON
3649000000–E	876	Class B Rip Rap	5.00	TON
3656000000–E	876	Geotextile for Drainage	902.00	SY
3659000000–N	SP	Preformed Scour Holes With Level Spreader Apron	1.00	EACH
4400000000–E	1110	Work Zone Signs (Stationary)	461.00	SF
4405000000–E	1110	Work Zone Signs (Portable)	32.00	SF
4410000000–E	1110	Work Zone Signs (Barricade Mounted)	132.00	SF
4422000000–N	1120	Portable Changeable Message Sign (Short Term)	28.00	DAY
4435000000–E	1135	Cones	7.00	EACH
4445000000–E	1145	Barricades (Type III)	96.00	LF
4685000000–E	1205	Thermoplastic Pavement Marking (4", 90 mils)	1710.00	LF
4686000000–E	1205	Thermoplastic Pavement Marking (4", 120 mils)	2596.00	LF
4695000000–E	1205	Thermoplastic (8", 90 mils)	125.00	LF
4725000000–E	1205	Thermoplastic Pavement Marking Symbols (90 mils)	4.00	EACH
6000000000–E	1605	Temporary Silt Fence	2545.00	LF
6006000000–E	1610	Stone for Erosion Control, Class A	120.00	TON
6009000000–E	1610	Stone for Erosion Control, Class B	90.00	TON
6012000000–E	1610	Sediment Control Stone	255.00	TON
6015000000–E	1615	Temporary Mulching	1.00	ACRE
6018000000–E	1620	Seed for Temporary Seeding	100.00	LB
6021000000–E	1620	Fertilizer for Temporary Seeding	0.50	TON
6024000000–E	1622	Temporary Slope Drains	200.00	LF
6029000000–E	SP	Safety Fence	100.00	LF
6030000000–E	1630	Silt Excavation	110.00	CY
6036000000–E	1631	Matting for Erosion Control	2390.00	SY
6037000000–E	SP	Coir Fiber Mat	100.00	SY
6042000000–E	1632	1/4" Hardware Cloth	595.00	LF

ITEM #	SECT. #	DESCRIPTION	QUANTITY	UNIT
6070000000–N	1639	Special Stilling Basin	4.00	EACH
6071010000–E	SP	Wattle	45.00	LF
6071020000–E	SP	Polyacrylamide (PAM)	10.00	LB
6071030000–E	1640	Coir Fiber Baffle	20.00	LF
6084000000–E	1660	Seeding & Mulching	3.00	ACRE
6087000000–E	1660	Mowing	0.50	ACRE
6090000000–E	1661	Seed for Repair Seeding	50.00	LB
6093000000–E	1661	Fertilizer for Repair Seeding	0.25	TON
6096000000–E	1662	Seed for Supplemental Seeding	50.00	LB
6108000000–E	1665	Fertilizer Topdressing	0.75	TON
6111000000–E	SP	Impervious Dike	92.00	LF
6114000000–N	1667	Specialized Hand Mowing	10.00	HR
6117000000–N	1675	Response for Erosion Control	25.00	EACH
6123000000–E	1670	Reforestation	0.10	ACRE
8035000000–N	402	Removal of Exist. Structure at Sta. 23+22.00	1.00	LS
8112730000–N	450	PDA Testing	3.00	EACH
8121000000–N	412	Unclassified Structure Exc. at Sta. 23+22.00	1.00	LS
8147000000–E	420	Reinf. Conc. Deck Slab	11467.00	SF
8161000000–E	420	Grooving Bridge Floors	10905.00	SF
8182000000–E	420	Class A Concrete (Bridge)	100.60	CY
8210000000–N	422	Bridge Approach Slabs, Station 23+22.00	1.00	LS
8217000000–E	425	Reinforcing Steel (Bridge)	15450.00	LBS
8262000000–E	430	45" Prestressed Conc. Girders	1032.52	LF
8364000000–E	450	HP 12x53 Steel Piles	1440.00	LF
8393000000–N	450	Pile Redrives	18.00	EACH
8475000000–E	460	Ttwo Bar Metal Rail	401.83	LF
8517000000–E	460	1'–2"x3'–3" Conc. Parapet	416.83	LF
8608000000–E	876	Rip Rap Class II (2'–0" Thick)	24.20	TON
8622000000–E	876	Geotextile for Drainage	27.00	SY
8657000000–N	430	Elastomeric Bearings	1.00	LS

5/28/99
8/5/2014
9:37:22 PM
P:\2013\13131.01 Bertford "33\Roadway\Proj\17BP.1.R.58_Rdy_sum.dgn

12/06/07

COMPUTED BY: bam	DATE:
CHECKED BY:	DATE:

STATE OF NORTH CAROLINA
DIVISION OF HIGHWAYS

PROJECT REFERENCE NO.	SHEET NO.
17BP.1.R.58	3-A

SUMMARY OF EARTHWORK

STATION	STATION	UNCL. EXCAV.	EMBANK. +%	BORROW	WASTE
-L- 19+00.00	-L- 22+16.96	62	1641	1579	
SUBTOTALS:		62	1641	1579	
-L- 24+27.04	-L- 27+55.00	28	1566	1538	
SUBTOTALS:		28	1566	1538	
PROJECT SUBTOTALS:		90	3207	3117	
LOSS DUE TO CLEARING & GRUBBING					
PROJECT TOTALS:		90	3207	3117	
5% TO REPLACE TOPSOIL ON BORROW PIT				156	
GRAND TOTALS:		90		3273	
SAY:		100		3300	

Note: Approximate quantities only. Unclassified Excavation, Shoulder Borrow, Fine Grading, Clearing and Grubbing, Breaking of Existing Pavement, and Removal of Existing Pavement will be paid for at the contract lump sum price for "Grading."

PAVEMENT REMOVAL SUMMARY

SURVEY LINE	STATION	STATION	LOCATION LT/RT/CL	YD^2
-L-	21+36.24	22+22.63	CL	265.29
-L-	24+23.03	25+43.25	CL	424.63
TOTAL:				689.92
SAY:				700.00

SHOULDER BERM GUTTER SUMMARY

SURVEY LINE	STATION	STATION	LENGTH
-L- LT.	21+81.88	22+02.79	20.91
-L- RT.	21+81.88	22+02.79	20.91
-L- LT.	24+41.21	24+58.13	16.92
-L- RT.	24+41.21	24+58.13	16.92
TOTAL:			75.66
SAY:			80.00

RIGHT OF WAY AREA DATA

PARCEL NO.	PROPERTY OWNERS NAMES	TOTAL ACREAGE	AREA TAKEN	AREA REMAINING RT.	AREA REMAINING LT.	CONST. EASE.	PERM. DRAIN. EASE.	PERM. UTILITY EASE.
1	ACTION REALTY ASSCOCIATES					2,316.30 SF	1350.00 SF	
2	TOWN OF AHOSKIE							0.29 AC
3	SAMUELS FARMER							0.107 AC
4	SHIRLEY FAYE KING							2,974.36 SF
5	GORDON R. KNOX							3,617.33 SF
6	COMMUNICATION PLUS, INC.						NO CLAIM	
7	KKD ENTERPRISES, LLC.						NO CLAIM	
8	KAYSEA PROPERTIES AHOSKIE, LLC.							1,690.86 SF
9	BETTY BROWN NEAL							1,616.86 SF

NOTE: INVERT ELEVATIONS INDICATED ARE FOR BID PURPOSES ONLY AND SHALL NOT BE USED FOR PROJECT CONSTRUCTION STAKEOUT. SEE "STANDARD SPECIFICATIONS FOR ROADS AND STRUCTURES, SECTION 300-5".

SUB-REGIONAL & REGIONAL LIST OF PIPES, ENDWALLS, ETC. (FOR PIPES 48" & UNDER)

STATION (SIZE / THICKNESS OR GAUGE)	LOCATION (LT,RT, OR CL)	STRUCTURE NO. FROM	STRUCTURE NO. TO	TOP ELEVATION	INVERT ELEVATION	INVERT ELEVATION	SLOPE CRITICAL	DRAINAGE PIPE (RCP, CSP, CAAP, HDPE, or PVC) 12"	15"	18"	24"	30"	36"	42"	48"	DO NOT USE RCP	DO NOT USE CSP	DO NOT USE CAAP	DO NOT USE HDPE
-L- 19+50	RT	0401		31.34	28.99														
		0401	0400		28.99	28.80													
-L- 20+25	RT	0402		31.10	29.18														
		0402	0401		29.18	28.99													
-L- 21+85	RT	0406		35.74	32.74														
-L- 21+85	LT	0405		35.74	30.74														
		0406	0405		32.39	32.99													
-L- 20+37	LT	0411		31.89	27.99														
		0405	0411		30.74	27.99				12									
		0411	0407		27.99	25.05				40									
-L- 24+55	LT	0409		36.04	33.04														
-L- 24+55	RT	0408		36.04	32.08														
		0409	0408		33.04	32.08													
-L- 24+55	RT	0404		34.50	30.60														
		0408	0404		32.08	30.60				12									
		0404	0403		30.60	30.00				36									
TOTAL										100									

STATION	FROM	TO	C.S. PIPE 12" (.064)	15" (.064)	18" (.064)	24" (.064)	36" (.079)	42" (.109)	48" (.109)	R.C. PIPE (CLASS III) 15"	18"	24"	30"	36"	42"	48"	R.C. PIPE (CLASS IV) 12"	15"	18"	24"	30"	36"	42"	48"
-L- 19+50	0401																							
	0401	0400																80						
-L- 20+25	0402																							
	0402	0401																76						
-L- 21+85	0406																							
-L- 21+85	0405																							
	0406	0405																	52					
-L- 20+37	0411																							
	0405	0411																						
	0411	0407																						
-L- 24+55	0409																							
-L- 24+55	0408																							
	0409	0408																	52					
-L- 24+55	0404																							
	0408	0404																						
	0404	0403																						
TOTAL																		156	104					

STATION	FROM	TO	**" R. C. PIPE (CLASS V)	**" R. C. PIPE CULVERTS, CONTRACTOR DESIGN PIPE	**" R. C. PIPE CULVERTS, CONTRACTOR DESIGN PIPE	15" SIDE DRAIN PIPE	18" SIDE DRAIN PIPE	ENDWALLS STD. 838.01, STD. 838.11 OR STD. 838.80 (UNLESS NOTED OTHERWISE) CU. YDS. R.C.P.	C.S.P.	QUANTITIES FOR DRAINAGE STRUCTURES PER EACH (0' THRU 5.0')	* TOTAL L.F. FOR PAY QUANTITY SHALL BE COL. 'A' + (1.3 X COL.'B') LIN. *FT. A 5.0' THRU 10.0'	B 10.0' AND ABOVE	C.B. STD. 840.01 OR STD. 840.02
-L- 19+50	0401									1			
	0401	0400											
-L- 20+25	0402									1			
	0402	0401											
-L- 21+85	0406									1			
-L- 21+85	0405									1			
	0406	0405											
-L- 20+37	0411									1			
	0405	0411											
	0411	0407											
-L- 24+55	0409									1			
-L- 24+55	0408									1			
	0409	0408											
-L- 24+55	0404									1			
	0408	0404											
	0404	0403											
TOTAL										8			

STATION	FROM	TO	FRAME, GRATES AND HOOD STANDARD 840.03 TYPE OF GRATE E	F	G		CONCRETE TRANSITIONAL SECTION CATCH BASIN	DROP INLET	G.D.I. TYPE "B" STD. 840.18 OR 840.27	G.D.I. (N.S.) FRAME WITH TWO GRATES STD. 840.24	G.D.I. TYPE "D" STD. 840.19 OR 840.28	T.B.D.I. STD. 840.35	G.D.I. (N.S.) FRAME WITH TWO GRATES STD. 840.29	M.H. FRAME & COVER STD. 840.54	J.B. STD. 840.31 OR 840.32	M.H. STD. 840.51 OR 840.53	CORR. STEEL ELBOWS NO. & SIZE	CONC. COLLARS CL. "B" C.Y. STD 840.72	CONC. & BRICK PIPE PLUG, C.Y. STD. 840.71	PIPE REMOVAL LIN.FT.	REMARKS
-L- 19+50	0401									1	1										
	0401	0400																		52'	
-L- 20+25	0402									1	1										
	0402	0401																		120'	
-L- 21+85	0406								1				1								
-L- 21+85	0405								1				1								
	0406	0405																			
-L- 20+37	0411													1		1					
	0405	0411																			
	0411	0407																			
-L- 24+55	0409								1				1								
-L- 24+55	0408								1				1								
	0409	0408																			
-L- 24+55	0404													1	1						
	0408	0404																			
	0404	0403																			
TOTAL									4	2	2		4	2	1	1				172'	

ABBREVIATIONS

C.B.	CATCH BASIN
N.D.I.	NARROW DROP INLET
D.I.	DROP INLET
G.D.I.	GRATED DROP INLET
G.D.I. (N.S.)	GRATED DROP INLET (NARROW SLOT)
J.B.	JUNCTION BOX
M.H.	MANHOLE
T.B.D.I.	TRAFFIC BEARING DROP INLET
T.B.J.B.	TRAFFIC BEARING JUNCTION BOX

"N" = DISTANCE FROM EDGE OF LANE TO FACE OF GUARDRAIL.
TOTAL SHOULDER WIDTH = DISTANCE FROM EDGE OF TRAVEL LANE TO SHOULDER BREAK POINT.
FLARE LENGTH = DISTANCE FROM LAST SECTION OF PARALLEL GUARDRAIL TO END OF GUARDRAIL.
W = TOTAL WIDTH OF FLARE FROM BEGINNING OF TAPER TO END OF GUARDRAIL.
G = GATING IMPACT ATTENUATOR TYPE 350
NG = NON-GATING IMPACT ATTENUATOR TYPE 350

GUARDRAIL SUMMARY

SURVEY LINE	BEG. STA.	END STA.	LOCATION	LENGTH STRAIGHT	SHOP CURVED	DOUBLE FACED	WARRANT POINT APPROACH END	TRAILING END	"N" DIST. FROM E.O.L.	TOTAL SHOUL. WIDTH	FLARE LENGTH APPROACH END	TRAILING END	W APPROACH END	TRAILING END
-L-	20+50.00	22+16.96	LT.	166.96'				22+16.96	8'	11'		50'-0"		1'-0"
-L-	21+28.15	22+16.96	RT.	74.36'	34.77'		22+16.96		8'	11'			4'-0"	
-L-	24+27.04	25+33.04	LT.	106.25'			24+27.04		8'	11'			4'-0"	
-L-	24+27.04	25+50.00	RT.	122.96'				24+27.04	8'	11'		50'-0"		1'-0"
		PROJECT SUBTOTAL		470.53'	34.77'									
		LESS ANCHOR DEDUCTIONS		(-)225.00'	(-)6.25'									
		PROJECT TOTAL		245.53'	28.52'									
		SAY		250.00'	37.50'	ADDITIONAL GUARDRAIL POSTS = 5 EACH								

SURVEY LINE	BEG. STA.	ANCHORS XI MOD	TYPE III	GRAU 350	M-350	B-77	CAT-1	VI MOD	BIC	AT-1	IMPACT ATTENUATOR TYPE 350 EA	G	NG	SINGLE FACED GUARDRAIL	REMOVE EXISTING GUARDRAIL	REMOVE AND STOCKPILE EXISTING GUARDRAIL	REMARKS
-L-	20+50.00		1	1													SEE SHEET 2-A FOR STRUTURE ANCHOR UNIT, TYPE III, DETAIL
-L-	21+28.15		1							1							SEE SHEET 2-A FOR STRUTURE ANCHOR UNIT, TYPE III, DETAIL
-L-	24+27.04		1	1													SEE SHEET 2-A FOR STRUTURE ANCHOR UNIT, TYPE III, DETAIL
-L-	24+27.04		1	1													SEE SHEET 2-A FOR STRUTURE ANCHOR UNIT, TYPE III, DETAIL
PROJECT SUBTOTAL			4	3						1							
LESS ANCHOR DEDUCTIONS		GUARDRAIL ANCHOR DEDUCTIONS TYPE III = 4 @ 18.75' = 75.00'															
PROJECT TOTAL		GRAU 350 = 3 @ 50' = 150.00'															
		AT-1 = 1 @ 6.25' = 6.25'															
SAY		TOTAL DEDUCTIONS = 231.25'															

9/11/2014 9:13:09 AM P:\2013\13131.01 Hertford #33\Roadway\Proj\17BP.1.R.58_Rdy_sum.dgn

PROJECT REFERENCE NO.	SHEET NO.
17BP.1.R.58	4
R/W SHEET NO.	

ROADWAY DESIGN ENGINEER: NORTH CAROLINA PROFESSIONAL SEAL 21716 ENGINEER ROB A. MATT 9/12/14

HYDRAULICS ENGINEER: NORTH CAROLINA PROFESSIONAL SEAL 23454 ENGINEER ANNIE D. GAMBER 9/12/14

WETHERILL ENGINEERING
559 Jones Franklin Rd. Suite 164
Raleigh, N.C. 27606
Bus: 919 851 8077
Fax: 919 851 8107
TRANSPORTATION PLANNING/DESIGN - BRIDGE/STRUCTURE DESIGN
CIVIL/SITE DESIGN - GIS/GPS - CONSTRUCTION OBSERVATION

DATUM DESCRIPTION

THE LOCALIZED COORDINATE SYSTEM DEVELOPED FOR THIS PROJECT IS BASED ON THE STATE PLANE COORDINATES ESTABLISHED BY NCDOT FOR MONUMENT "HER-331"
WITH NAD 83/NA 2011 STATE PLANE GRID COORDINATES OF
NORTHING: 926,114.034(ft) EASTING: 2,588404.410(ft)
ELEVATION: 37.257(ft)
THE AVERAGE COMBINED GRID FACTOR USED ON THIS PROJECT (GROUND TO GRID) IS: 1.000036822
THE N.C. LAMBERT GRID BEARING AND LOCALIZED HORIZONTAL GROUND DISTANCE FROM "HER-331" TO -L- STATION 19+00.00 IS
988.72' N 65° 32' 06.4" E
ALL LINEAR DIMENSIONS ARE LOCALIZED HORIZONTAL DISTANCES
VERTICAL DATUM USED IS NAVD 88

-L-
PI Sta 16+55.05
Δ = 33°14' 45.9" (LT)
D = 4° 50' 00.0"
L = 687.85'
T = 353.91'
R = 1,185.43'
SE = EXIST.
R0 = SEE PLANS

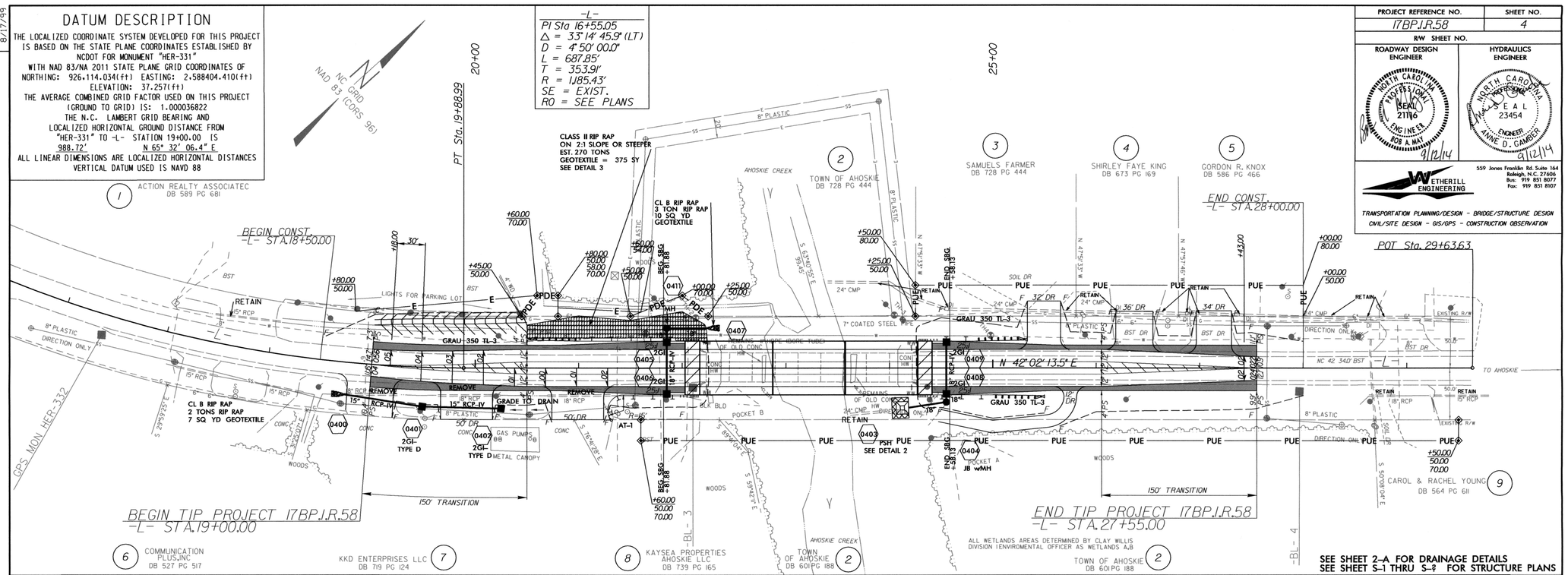

BRIDGE HYDRAULIC DATA

DESIGN DISCHARGE	= 4637	CFS
DESIGN FREQUENCY	= 50	YRS
DESIGN HW ELEVATION	= 30.4	FT
BASE DISCHARGE	= 6232	CFS
BASE FREQUENCY	= 100	YRS
BASE HW ELEVATION	= 31.5	FT
OVERTOPPING DISCHARGE	= 5300	CFS
OVERTOPPING FREQUENCY	= 50+	YRS
OVERTOPPING ELEVATION	= 30.6	FT
DATE OF SURVEY	= 9/5/13	
W.S.ELEVATION AT DATE OF SURVEY	= 17.4	FT

BM10 ELEVATION - 26.97
N 926755 E 2589398
BL STATION 17+31.00 101 LEFT
R/R SPIKE IN 24" MAPLE

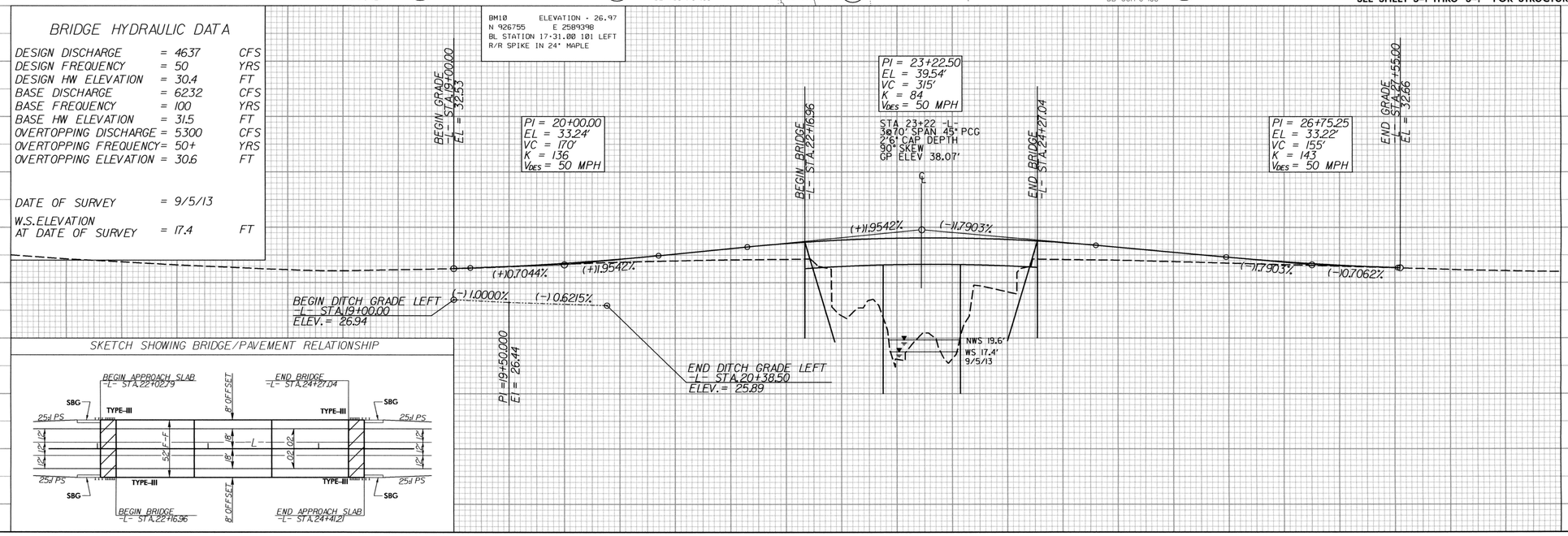

SKETCH SHOWING BRIDGE/PAVEMENT RELATIONSHIP

REVISIONS

8/17/99

8/12/2014 8:43:31 AM
R:\Roadway\Proj\17BP.1.R.58_Rdy_sdsdsn_01.dgn

STATE OF NORTH CAROLINA
DIVISION OF HIGHWAYS

TRANSPORTATION MANAGEMENT PLAN

HERTFORD COUNTY

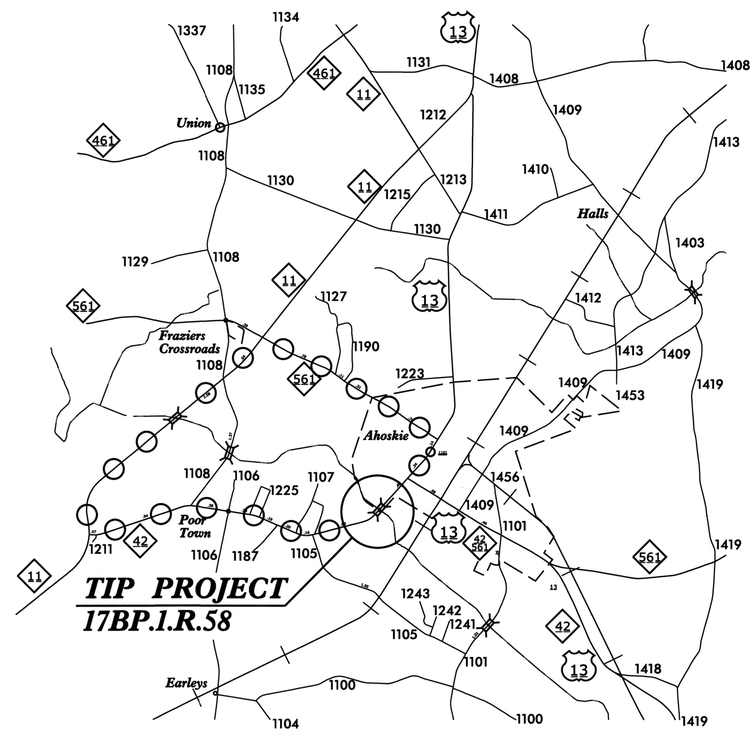

LOCATION: BRIDGE NO. 33 OVER AHOSKIE CREEK ON NC 42 IN AHOSKIE

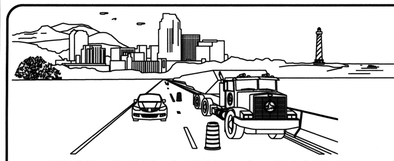

WORK ZONE SAFETY & MOBILITY
"from the MOUNTAINS to the COAST"

N.C.D.O.T. WORK ZONE TRAFFIC CONTROL
1561 MAIL SERVICE CENTER (MSC) RALEIGH, NC 27699-1561
750 N. GREENFIELD PARKWAY, GARNER, NC 27529 (DELIVERY)
PHONE: (919) 773-2800 FAX: (919) 771-2745

J. S. BOURNE, P.E. — STATE TRAFFIC MANAGEMENT ENGINEER
STEVE KITE, P.E. — TRAFFIC CONTROL PROJECT ENGINEER
_____ — TRAFFIC CONTROL PROJECT DESIGN ENGINEER
_____ — TRAFFIC CONTROL DESIGN ENGINEER

DIVISION OF HIGHWAYS * STATE OF NORTH CAROLINA * DEPARTMENT OF TRANSPORTATION * WORK ZONE TRAFFIC CONTROL

INDEX OF SHEETS

SHEET NO.	TITLE
TMP-1	TITLE SHEET, VICINITY MAP AND INDEX OF SHEETS
TMP-1A	LIST OF APPLICABLE ROADWAY STANDARD DRAWINGS, AND LEGEND
TMP-1B	TRANSPORTATION OPERATIONS PLAN: (MANAGEMENT STRATEGIES, GENERAL NOTES AND LOCAL NOTES)
TMP-2 AND TMP-3	TEMPORARY TRAFFIC CONTROL DETAILS
PMP-1	PAVEMENT MARKING PLAN TITLE SHEET
PMP-2	PAVEMENT MARKING PLAN DETAIL

WETHERILL ENGINEERING
559 Jones Franklin Rd. Suite 164
Raleigh, N.C. 27606
Liscense No. F-0377
Bus: 919 851 8077
Fax: 919 851 8107
TRANSPORTATION PLANNING/DESIGN - BRIDGE/STRUCTURE DESIGN
CIVIL/SITE DESIGN - GIS/GPS - CONSTRUCTION OBSERVATION

BOB MAY, PE — PROJECT ENGINEER
C.L.MULLEN — TRAFFIC CONTROL SPECIALIST

APPROVED: Bob A May
DATE: 7/7/14

SEAL — NORTH CAROLINA PROFESSIONAL SEAL 21116 ENGINEER BOB A MAY

SHEET NO.
TMP-1

17BP.1.R.58

TIP PROJECT:

6/19/2014
3:22:29 PM
P:\2013\1313.01Hertford #33\Traffic\TrafficControl\TCP\17BP.1.R.58_TC_PSH.dgn

PROJ. REFERENCE NO.	SHEET NO.
17BP.1.R.58	TMP-1A

ROADWAY STANDARD DRAWINGS

THE FOLLOWING ROADWAY STANDARDS AS SHOWN IN "ROADWAY STANDARD DRAWINGS" - PROJECT SERVICES UNIT - N.C. DEPARTMENT OF TRANSPORTATION - RALEIGH, N.C., DATED JANUARY 2012 ARE APPLICABLE TO THIS PROJECT AND BY REFERENCE HEREBY ARE CONSIDERED A PART OF THESE PLANS:

STD. NO.	TITLE
1101.03	TEMPORARY ROAD CLOSURES
1101.04	TEMPORARY SHOULDER CLOSURES
1101.05	WORK ZONE VEHICLE ACCESSES
1101.11	TRAFFIC CONTROL DESIGN TABLES
1110.01	STATIONARY WORK ZONE SIGNS
1110.02	PORTABLE WORK ZONE SIGNS
1135.01	CONES
1145.01	BARRICADES
1150.01	FLAGGING DEVICES

LEGEND

GENERAL

DIRECTION OF TRAFFIC FLOW

EXIST. PVMT.

NORTH ARROW

PROPOSED PVMT.

WORK AREA

SIGNALS

EXISTING

TRAFFIC CONTROL DEVICES

BARRICADE (TYPE III)

CONE

TEMPORARY SIGNING

STATIONARY SIGN

WETHERILL ENGINEERING
559 Jones Franklin Rd. Suite 164
Raleigh, N.C. 27606
Liscense No. F-0377
Bus: 919 851 8077
Fax: 919 851 8107
TRANSPORTATION PLANNING/DESIGN - BRIDGE/STRUCTURE DESIGN
CIVIL/SITE DESIGN - GIS/GPS - CONSTRUCTION OBSERVATION

APPROVED: DATE: 7/7/14

SEAL

NORTH CAROLINA PROFESSIONAL SEAL 21116 ENGINEER BOB A. MAY

DIVISION OF HIGHWAYS STATE OF NORTH CAROLINA DEPARTMENT OF TRANSPORTATION WORK ZONE TRAFFIC CONTROL

ROADWAY STANDARD DRAWINGS & LEGEND

6/19/2014
8:34:46 PM
R:\2013\33\01Hertford #33\Traffic\TrafficControl\TCP\17BP.1.R.58_TC_PSHIA.dgn

PROJ. REFERENCE NO.	SHEET NO.
17BP.1.R.58	TMP-1B

MANAGEMENT STRATEGIES

TRAFFIC OPERATIONS

NC 42 EB AND WB TRAFFIC WILL BE DETOURED OFF-SITE DURING REPLACEMENT OF THE EXISTING STRUCTURE OVER AHOSKIE CREEK.

THE OFF-SITE DETOUR ROUTING WILL BE AS FOLLOWS:

1. NC 11
2. NC 561
3. US 13

LOCAL ACCESS TO ALL RESIDENCES AND BUSINESSES WILL BE MAINTAINED BETWEEN THE ROAD CLOSURE POINTS AT ALL TIMES DURING CONSTRUCTION.

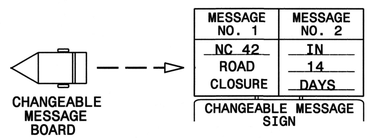

USE CHANGEABLE MESSAGE BOARDS FOR A 14-DAY COUNTDOWN ROAD CLOSURE NOTICE PRIOR TO ACTIVATING NC 42 EB AND WB TEMPORARY DETOUR.

POSITION CHANGEABLE MESSAGE BOARDS AT THE DETOUR POINTS AS APPROVED BY THE ENGINEER.

PUBLIC INFORMATION

BUSINESSES, RESIDENTS, HOSPITALS, EMERGENCY SERVICES, AND SCHOOL(S) AFFECTED BY THE NC 42 DETOUR ROUTE WILL BE NOTIFIED IN ADVANCE BEFORE CLOSING NC 42 FOR PROPOSED BRIDGE CONSTRUCTION.

GENERAL NOTES / LOCAL NOTES

CHANGES MAY BE REQUIRED WHEN PHYSICAL DIMENSIONS IN THE DETAIL DRAWINGS, STANDARD DETAILS, AND ROADWAY DETAILS ARE NOT ATTAINABLE TO MEET FIELD CONDITIONS OR RESULT IN DUPLICATE OR UNDESIRED OVERLAPPING OF DEVICES. MODIFICATION MAY INCLUDE: MOVING, SUPPLEMENTING, COVERING, OR REMOVAL OF DEVICES AS DIRECTED BY THE ENGINEER.

THE FOLLOWING GENERAL NOTES APPLY AT ALL TIMES FOR THE DURATION OF THE CONSTRUCTION PROJECT EXCEPT WHEN OTHERWISE NOTED IN THE PLAN OR DIRECTED BY THE ENGINEER.

LANE AND SHOULDER CLOSURE REQUIREMENTS

A) WHEN PERSONNEL AND/OR EQUIPMENT ARE WORKING WITHIN 15 FT OF AN OPEN TRAVEL LANE, CLOSE THE NEAREST OPEN SHOULDER USING ROADWAY STANDARD DRAWING NO. 1101.04 UNLESS THE WORK AREA IS PROTECTED BY BARRIER OR GUARDRAIL OR A LANE CLOSURE IS INSTALLED.

TRAFFIC PATTERN ALTERATIONS

B) NOTIFY THE ENGINEER TWENTY ONE (21) CALENDAR DAYS PRIOR TO ANY TRAFFIC PATTERN ALTERATION.

SIGNING

C) PROVIDE SIGNING AND DEVICES REQUIRED TO CLOSE THE ROAD ACCORDING TO THE ROADWAY STANDARD DRAWINGS AND TRAFFIC CONTROL PLAN.

PROVIDE SIGNING REQUIRED FOR THE OFF-SITE DETOUR ROUTE AS SHOWN IN THE TRAFFIC CONTROL PLAN.

D) COVER OR REMOVE ALL SIGNS AND DEVICES REQUIRED TO CLOSE THE ROAD WHEN WHEN ROAD CLOSURE IS NOT IN OPERATION.

COVER OR REMOVE ALL SIGNS REQUIRED FOR THE OFF-SITE DETOUR WHEN THE DETOUR IS NOT IN OPERATION.

E) ENSURE ALL NECESSARY SIGNING IS IN PLACE PRIOR TO ALTERING ANY TRAFFIC PATTERN.

F) PLACE TYPE III BARRICADES WITH "ROAD CLOSED" SIGN R11-2 ATTACHED, SUFFICIENT LENGTH TO CLOSE ENTIRE ROADWAY.

SIGNALS

G) ANY NECESSARY TIMING ADJUSTMENTS TO EXISTING TRAFFIC SIGNALS ALONG THE DETOUR ROUTE WILL BE HANDLED BY OTHERS.

ETHERILL ENGINEERING
559 Jones Franklin Rd. Suite 164
Raleigh, N.C. 27606
Liscense No. F-0377
Bus: 919 851 8077
Fax: 919 851 8107
TRANSPORTATION PLANNING/DESIGN - BRIDGE/STRUCTURE DESIGN
CIVIL/SITE DESIGN - GIS/GPS - CONSTRUCTION OBSERVATION

APPROVED: Bob A. May DATE: 7/7/14

SEAL

NORTH CAROLINA PROFESSIONAL SEAL 21116 ENGINEER BOB A. MAY

DIVISION OF HIGHWAYS STATE OF NORTH CAROLINA DEPARTMENT OF TRANSPORTATION WORK ZONE TRAFFIC CONTROL

TRANSPORTATION OPERATIONS PLAN

6/19/2014
2:45:25 PM
P:\2013\1313.01 Hertford #33\Traffic\TrafficControl\TCP\17BP.1.R.58_TC_PSHB.dgn

PROJ. REFERENCE NO.	SHEET NO.
17BP.1.R.58	TMP-2

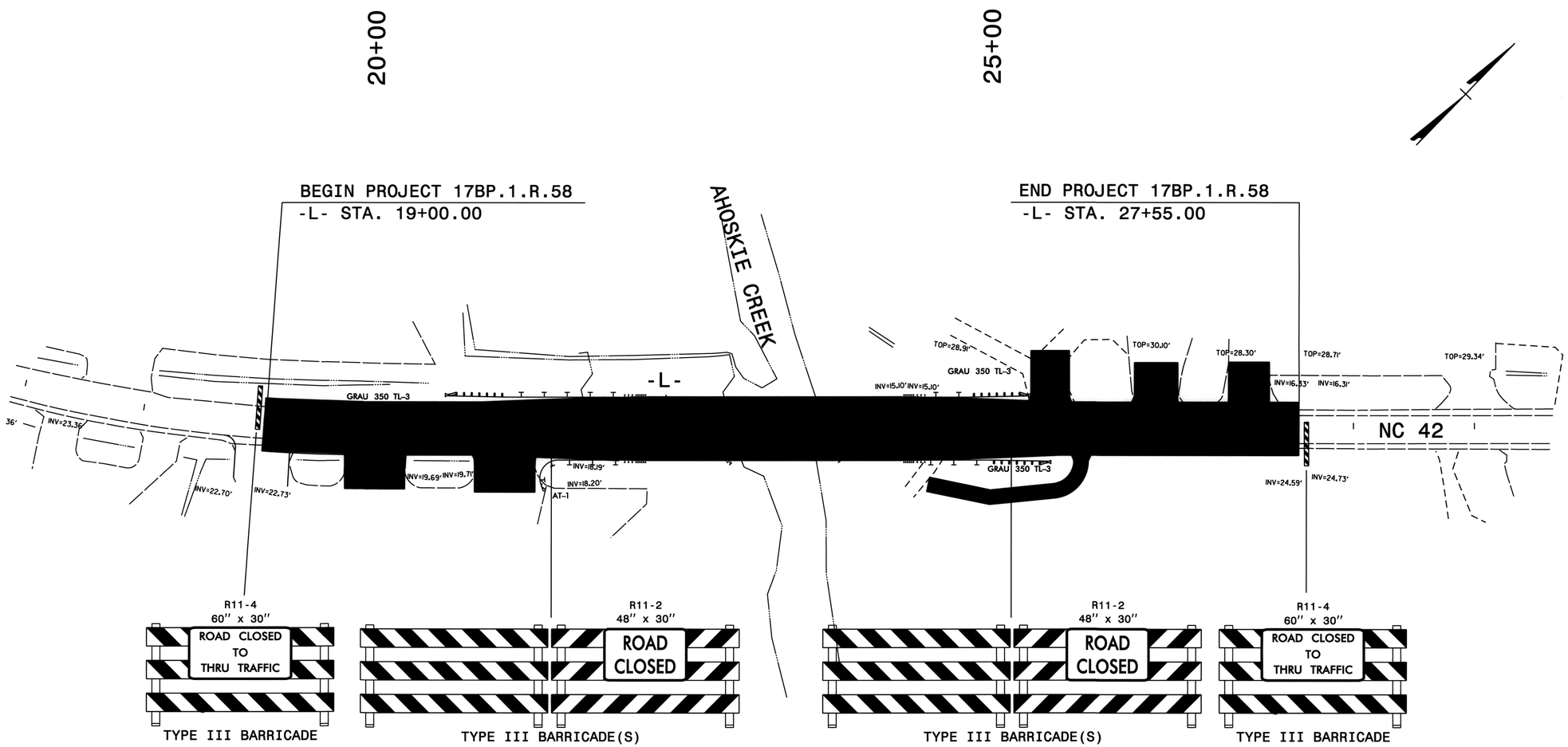

PHASING

LOCATE CHANGEABLE MESSAGE BOARDS (CMS) FOR A 14-DAY COUNTDOWN-TO-CLOSURE MESSAGE SEQUENCE FOR ADVISORY INFORMATION PRIOR TO CLOSING NC 42 EASTBOUND AND WESTBOUND TO THRU TRAFFIC AS SHOWN ON TMP-1B AND AS DIRECTED BY THE ENGINEER.

STEP 1) INSTALL AND COVER TEMPORARY OFF-SITE DETOUR SIGNING AND ROAD CLOSURE SIGNING ACCORDING TO TMP-3 AND ROADWAY STANDARD DRAWING NO. 1101.03, SHEET 1 OF 9.

STEP 2) UNCOVER OFF-SITE DETOUR AND ROAD CLOSURE SIGNING AS SHOWN ON TMP-3. PLACE TYPE III BARRICADES TO CLOSE NC 42 EASTBOUND AND WESTBOUND TO THRU TRAFFIC. PLACE ADDITIONAL BARRICADES AS REQUIRED.

STEP 3) REMOVE EXISTING STRUCTURE AND CONSTRUCT PROPOSED -L- STRUCTURE AND APPROACHES. MAINTAIN EXISTING DRIVEWAY ACCESS AT ALL TIMES DURING CONSTRUCTION.

STEP 4) PLACE FINAL THERMOPLASTIC PAVEMENT MARKINGS ON -L- STRUCTURE AND APPROACHES.

STEP 5) REMOVE TYPE III BARRICADES AND RESTORE NC 42 EASTBOUND AND WESTBOUND TRAFFIC TO THE EXISTING PATTERN. REMOVE TEMPORARY OFF-SITE DETOUR SIGNING AND ROAD CLOSURE SIGNING.

REFER TO TMP-3 FOR THE NC 42 EB AND WB OFF-SITE DETOUR ROUTE.

REFER TO PMP-1 AND PMP-2 FOR FINAL PAVEMENT MARKINGS LAYOUT.

WETHERILL ENGINEERING
559 Jones Franklin Rd. Suite 164
Raleigh, N.C. 27606
Liscense No. F-0377
Bus: 919 851 8077
Fax: 919 851 8107
TRANSPORTATION PLANNING/DESIGN - BRIDGE/STRUCTURE DESIGN
CIVIL/SITE DESIGN - GIS/GPS - CONSTRUCTION OBSERVATION

APPROVED: DATE: 7/7/14

SEAL

NORTH CAROLINA PROFESSIONAL SEAL 21116 ENGINEER JOB A. MAY

DIVISION OF HIGHWAYS STATE OF NORTH CAROLINA DEPARTMENT OF TRANSPORTATION WORK ZONE TRAFFIC CONTROL

TEMPORARY TRAFFIC CONTROL DETAIL

6/19/2014
2:27:38 PM
P:\2013\1313.01 Hertford #33\Traffic\TrafficControl\TCP\17BP.1.R.58_TC_PSH2.dgn

PROJ. REFERENCE NO.	SHEET NO.
17BP.1.R.58	TMP-3

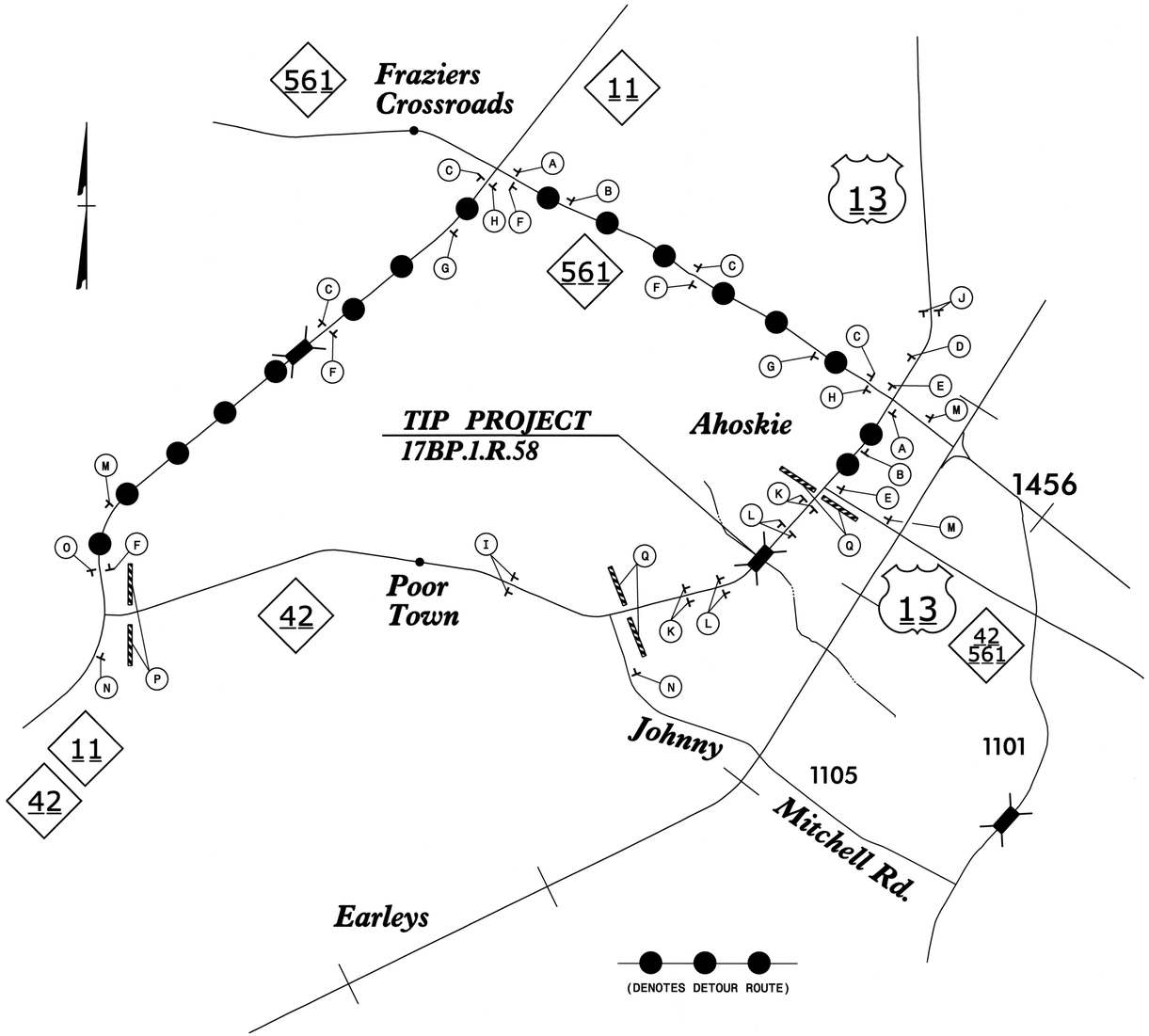

NC 42 OFF-SITE DETOUR SIGNING

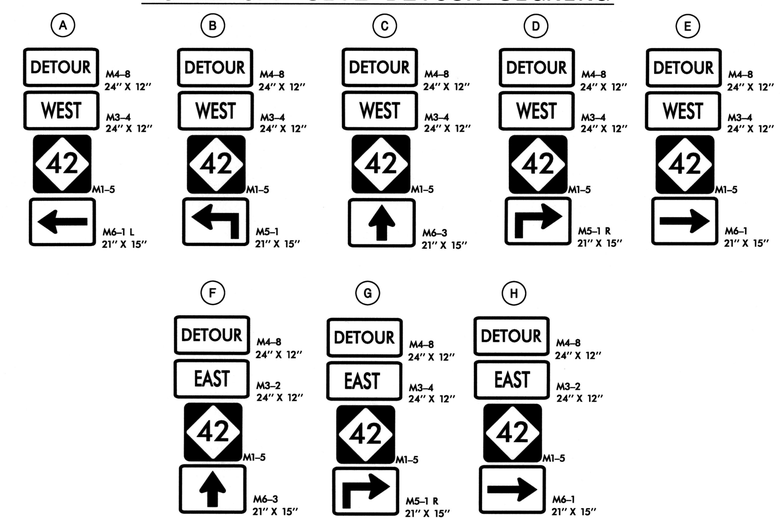

NC 42 ROAD CLOSURE SIGNING

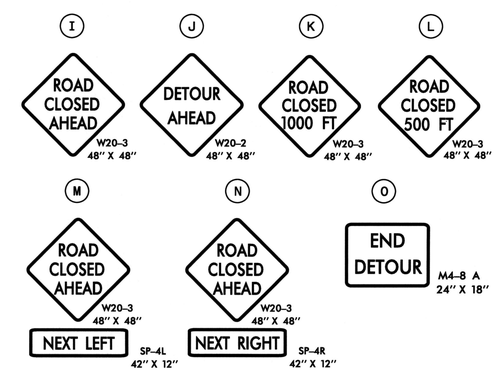

TYPE III BARRICADES

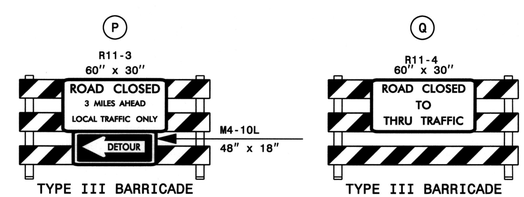

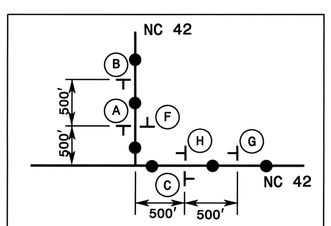

TYPICAL DETOUR SIGNING PLACEMENT AT EXISTING OFF-SITE INTERSECTIONS

SEE TMP-2 FOR TYPE III BARRICADE PLACEMENT AT THE ROAD CLOSURE POINT.

SEE ROADWAY STANDARD DRAWING 1101.03, SHEET 1 OF 9, FOR ROAD CLOSURE SIGN SPACING APPROACHING THE ROAD CLOSURE POINT.

ANY NECESSARY MODIFICATIONS TO EXISTING ROUTE SIGNS, REGULATORY SIGNS, OR DESTINATION SIGNS ALONG THE OFF-SITE DETOUR ROUTE WILL BE MADE BY OTHERS.

WETHERILL ENGINEERING
559 Jones Franklin Rd. Suite 164
Raleigh, N.C. 27606
Liscense No. F-0377
Bus: 919 851 8077
Fax: 919 851 8107
TRANSPORTATION PLANNING/DESIGN - BRIDGE/STRUCTURE DESIGN
CIVIL/SITE DESIGN - GIS/GPS - CONSTRUCTION OBSERVATION

APPROVED: DATE: 7/7/14

SEAL

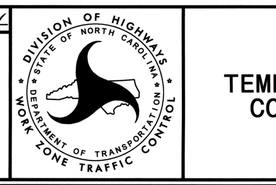

TEMPORARY TRAFFIC CONTROL DETAIL

6/19/2014
3:30:04 PM
P:\2013\1313.01\Hertford #33\Traffic\TrafficControl\TCP\17BP.1.R.58_TC_PSH3.dgn

TIP NO.	SHEET NO.
17BP.1.R.58	PMP-1

APPROVED: Bob A. May

DATE: 7/7/14

SEAL

NORTH CAROLINA PROFESSIONAL SEAL 21116 ENGINEER BOB A. MAY

17BP.1.R.58

CONTRACT:

STATE OF NORTH CAROLINA
DEPARTMENT OF TRANSPORTATION

PAVEMENT MARKING PLAN
HERTFORD COUNTY

INDEX

SHEET NO.	DESCRIPTION
PMP-1	PAVEMENT MARKING PLAN COVER SHEET
PMP-2	PAVEMENT MARKING DETAIL AND MARKING SCHEDULE

ROADWAY STANDARD DRAWING

THE FOLLOWING ROADWAY STANDARDS AS APPEAR IN "ROADWAY STANDARD DRAWINGS" - PROJECT SERVICES UNIT - N.C. DEPARTMENT OF TRANSPORTATION - RALEIGH, N.C., DATED JANUARY 2012 ARE APPLICABLE TO THIS PROJECT AND BY REFERENCE HEREBY ARE CONSIDERED A PART OF THESE PLANS:

STD. NO.	TITLE
1205.01	PAVEMENT MARKINGS - LINE TYPES AND OFFSETS
1205.02	PAVEMENT MARKINGS - 2 LANE AND MULTILANE ROADWAYS
1261.01	GUARDRAIL AND BARRIER DELINEATOR SPACING
1261.02	GUARDRAIL AND BARRIER DELINEATOR TYPES
1262.01	GUARDRAIL END DELINEATION

GENERAL NOTES

THE FOLLOWING GENERAL NOTES APPLY AT ALL TIMES FOR THE DURATION OF THE CONSTRUCTION PROJECT, EXCEPT WHEN OTHERWISE NOTED IN THE PLAN, OR DIRECTED BY THE ENGINEER.

A) INSTALL PAVEMENT MARKINGS AND PAVEMENT MARKERS ON THE FINAL SURFACE AS FOLLOWS:

ROAD NAME	MARKING	MARKER
1. NC 42	THERMOPLASTIC	N/A

B) TIE PROPOSED PAVEMENT MARKING LINES TO EXISTING PAVEMENT MARKING LINES.

C) REMOVE/REPLACE ANY CONFLICTING/DAMAGED PAVEMENT MARKINGS.

D) PASSING ZONES WILL BE DETERMINED IN THE FIELD AND MUST BE APPROVED BY THE ENGINEER.

PLAN REVIEWED BY: N.C.D.O.T. SIGNING AND DELINEATION UNIT

AYMAN ALQUDWAH — SIGNING & DELINEATION STANDARDS ENGINEER

_____ — SIGNING & DELINEATION PROJECT DESIGN ENGINEER

DIVISION OF HIGHWAYS · STATE OF NORTH CAROLINA · DEPARTMENT OF TRANSPORTATION · WORK ZONE TRAFFIC CONTROL UNIT

PLAN PREPARED BY:

BOB MAY, PE — ROADWAY PROJECT ENGINEER

CHARLES MULLEN — TRAFFIC CONTROL/PAVEMENT MARKING SPECIALIST

WETHERILL ENGINEERING
559 Jones Franklin Rd. Suite 164
Raleigh, N.C. 27606
License No. F-0377
Bus: 919 851 8077
Fax: 919 851 8107
TRANSPORTATION PLANNING/DESIGN - BRIDGE/STRUCTURE DESIGN
CIVIL/SITE DESIGN - GIS/GPS - CONSTRUCTION OBSERVATION

6/19/2014
2:42:13 PM
R:\2013\13131.01 Hertford #33\Traffic\TrafficControl\TCP\17BP.1.R.58_PM_PSH1.dgn

TIP NO.	SHEET NO.
17BP.1.R.58	PMP-2

APPROVED: Bob A. May

DATE: 4/7/14

SEAL

NORTH CAROLINA PROFESSIONAL SEAL 21116 ENGINEER BOB A. MAY

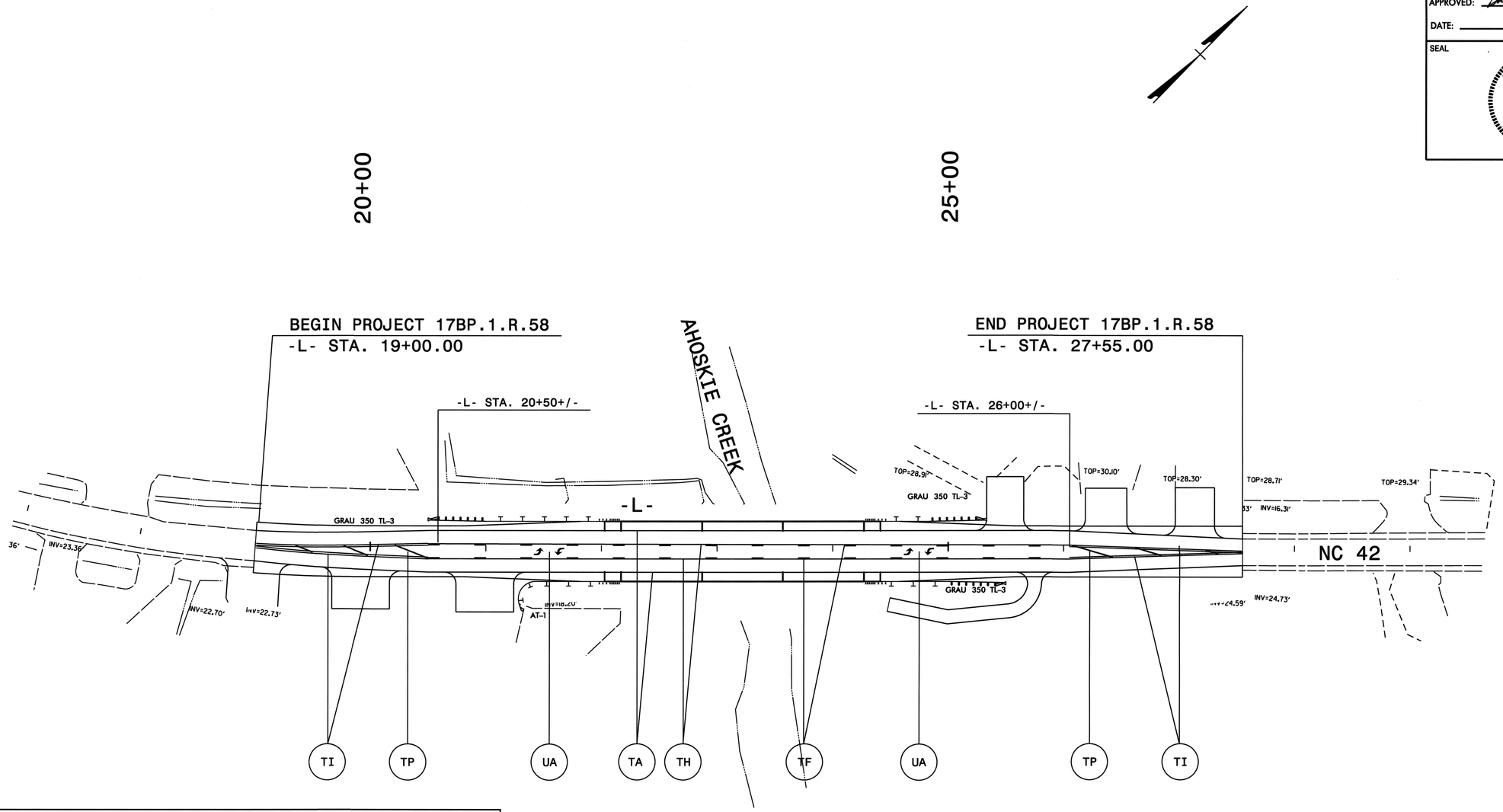

PAVEMENT MARKING SCHEDULE

SYMBOL	DESCRIPTION
	FINAL PAVEMENT MARKINGS
	THERMOPLASTIC (4", 90 MILS)
TA	WHITE EDGELINE
	THERMOPLASTIC (4", 120 MILS)
TF	10' YELLOW SKIP
TH	YELLOW SINGLE CENTER
TI	YELLOW DOUBLE CENTER
	THERMOPLASTIC (8", 90 MILS)
TP	YELLOW DIAGONAL
	THERMOPLASTIC PAVEMENT MARKING SYMBOLS (90 MILS)
UA	LEFT TURN ARROW

WETHERILL ENGINEERING
559 Jones Franklin Rd. Suite 164
Raleigh, N.C. 27606
Liscense No. F-0377
Bus: 919 851 8077
Fax: 919 851 8107
TRANSPORTATION PLANNING/DESIGN - BRIDGE/STRUCTURE DESIGN
CIVIL/SITE DESIGN - GIS/GPS - CONSTRUCTION OBSERVATION

PAVEMENT MARKING DETAIL AND MARKING SCHEDULE

6/19/2014
2:42:25 PM
P:\2013\3131.01Hertford #33\Traffic\TrafficControl\TCP\17BP.1.R.58_PM_PSH2.dgn

STATE	STATE PROJECT REFERENCE NO.	SHEET NO.	TOTAL SHEETS
N.C.	17BP.1.R.58	RF-1	
STATE PROJ. NO.	F. A. PROJ. NO.	DESCRIPTION	

PLANTING DETAILS

SEEDLING / LINER BAREROOT PLANTING DETAIL

HEALING IN

1. Locate a healing-in site in a shady, well protected area.
2. Excavate a flat bottom trench 12 inches deep and provide drainage.

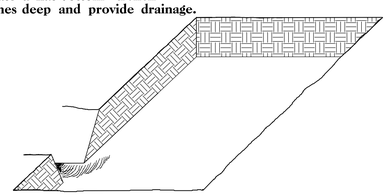

3. Backfill the trench with 2 inches well rotted sawdust. Place a 2 inch layer of well rotted sawdust at a sloping angle at one end of the trench.

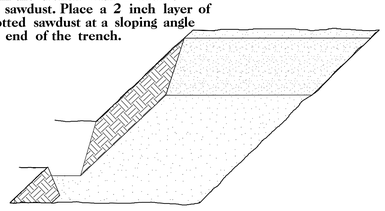

4. Place a single layer of plants against the sloping end so that the root collar is at ground level.

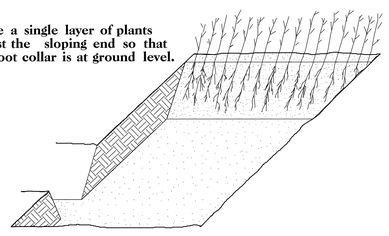

5. Place a 2 inch layer of well rotted sawdust over the roots maintaining a sloping angle.

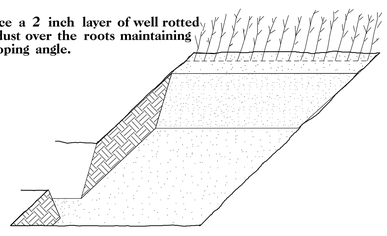

6. Repeat layers of plants and sawdust as necessary and water thoroughly.

DIBBLE PLANTING METHOD
USING THE KBC PLANTING BAR

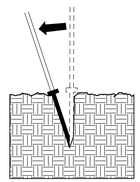

1. Insert planting bar as shown and pull handle toward planter.

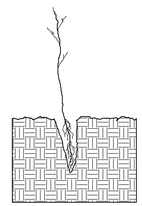

2. Remove planting bar and place seedling at correct depth.

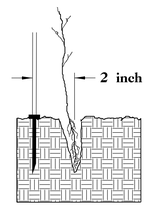

3. Insert planting bar 2 inches toward planter from seedling.

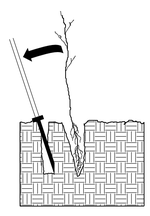

4. Pull handle of bar toward planter, firming soil at bottom.

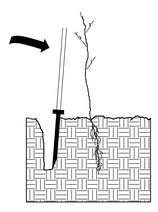

5. Push handle forward firming soil at top.

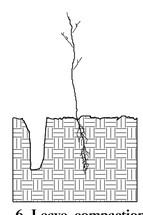

6. Leave compaction hole open. Water thoroughly.

PLANTING NOTES:

PLANTING BAG
During planting, seedlings shall be kept in a moist canvas bag or similar container to prevent the root systems from drying.

KBC PLANTING BAR
Planting bar shall have a blade with a triangular cross section, and shall be 12 inches long, 4 inches wide and 1 inch thick at center.

ROOT PRUNING
All seedlings shall be root pruned, if necessary, so that no roots extend more than 10 inches below the root collar.

REFORESTATION

☐ TREE REFORESTATION SHALL BE PLANTED 6 FT. TO 10 FT. ON CENTER, RANDOM SPACING, AVERAGING 8 FT. ON CENTER, APPROXIMATELY 680 PLANTS PER ACRE.

REFORESTATION

MIXTURE, TYPE, SIZE, AND FURNISH SHALL CONFORM TO THE FOLLOWING:

25%	LIRIODENDRON TULIPIFERA	TULIP POPLAR	12 in – 18 in BR
25%	PLATANUS OCCIDENTALIS	SYCAMORE	12 in – 18 in BR
25%	FRAXINUS PENNSYLVANICA	GREEN ASH	12 in – 18 in BR
25%	BETULA NIGRA	RIVER BIRCH	12 in – 18 in BR

REFORESTATION DETAIL SHEET

N.C.D.O.T. - ROADSIDE ENVIRONMENTAL UNIT

09/08/99

TIP PROJECT: 17BP.1.R.58

See Sheet 1-A For Index of Sheets
See Sheet 1-B For Conventional Symbols

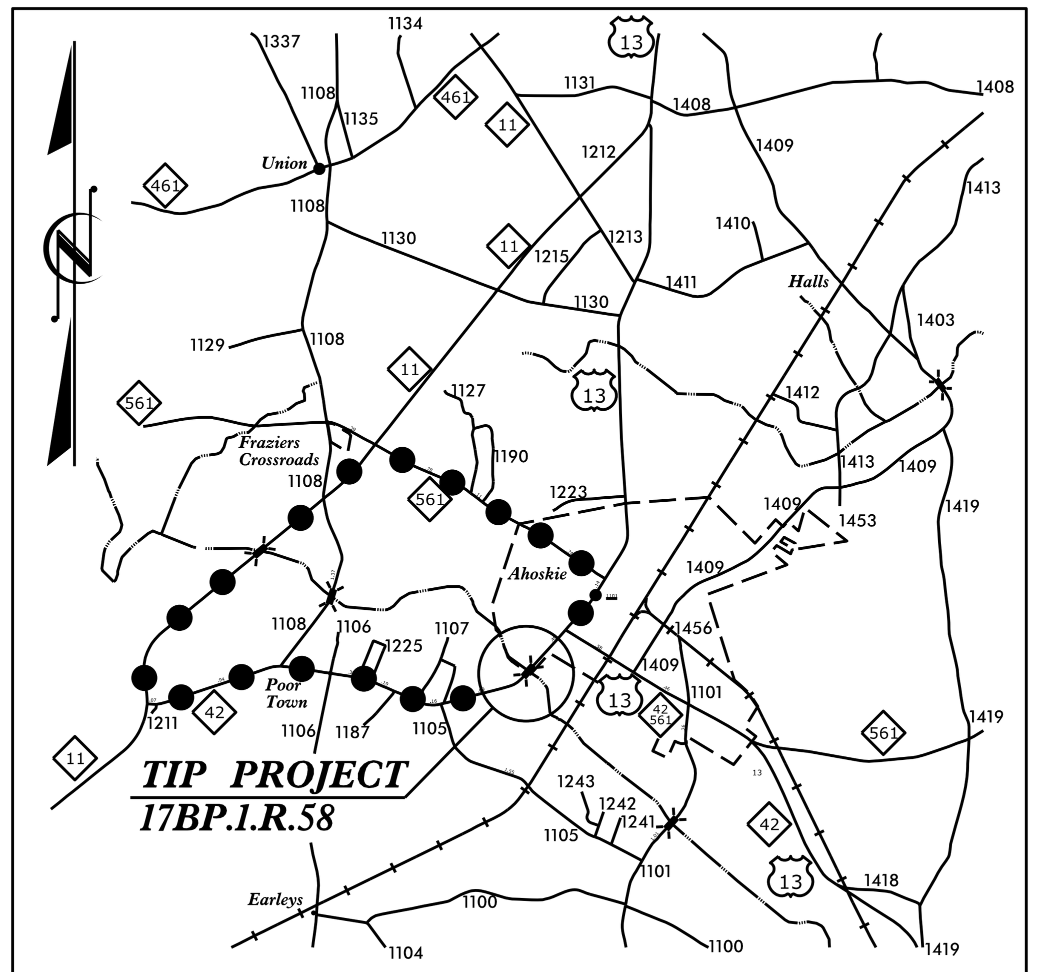

VICINITY MAP

OFF–SITE DETOUR

STATE OF NORTH CAROLINA
DIVISION OF HIGHWAYS

HERTFORD COUNTY

LOCATION: BRIDGE NO. 33 OVER AHOSKIE CREEK ON NC 42 IN AHOSKIE

TYPE OF WORK: GRADING, DRAINAGE, PAVING & STRUCTURE

PLAN FOR PROPOSED
HIGHWAY EROSION CONTROL

NAD 83

STATE	STATE PROJECT REFERENCE NO.	SHEET NO.	TOTAL SHEETS
N.C.	17BP.1.R.58	EC1	

STATE PROJ. NO.	F. A. PROJ. NO.	DESCRIPTION
		PE
		UTIL. & ROW

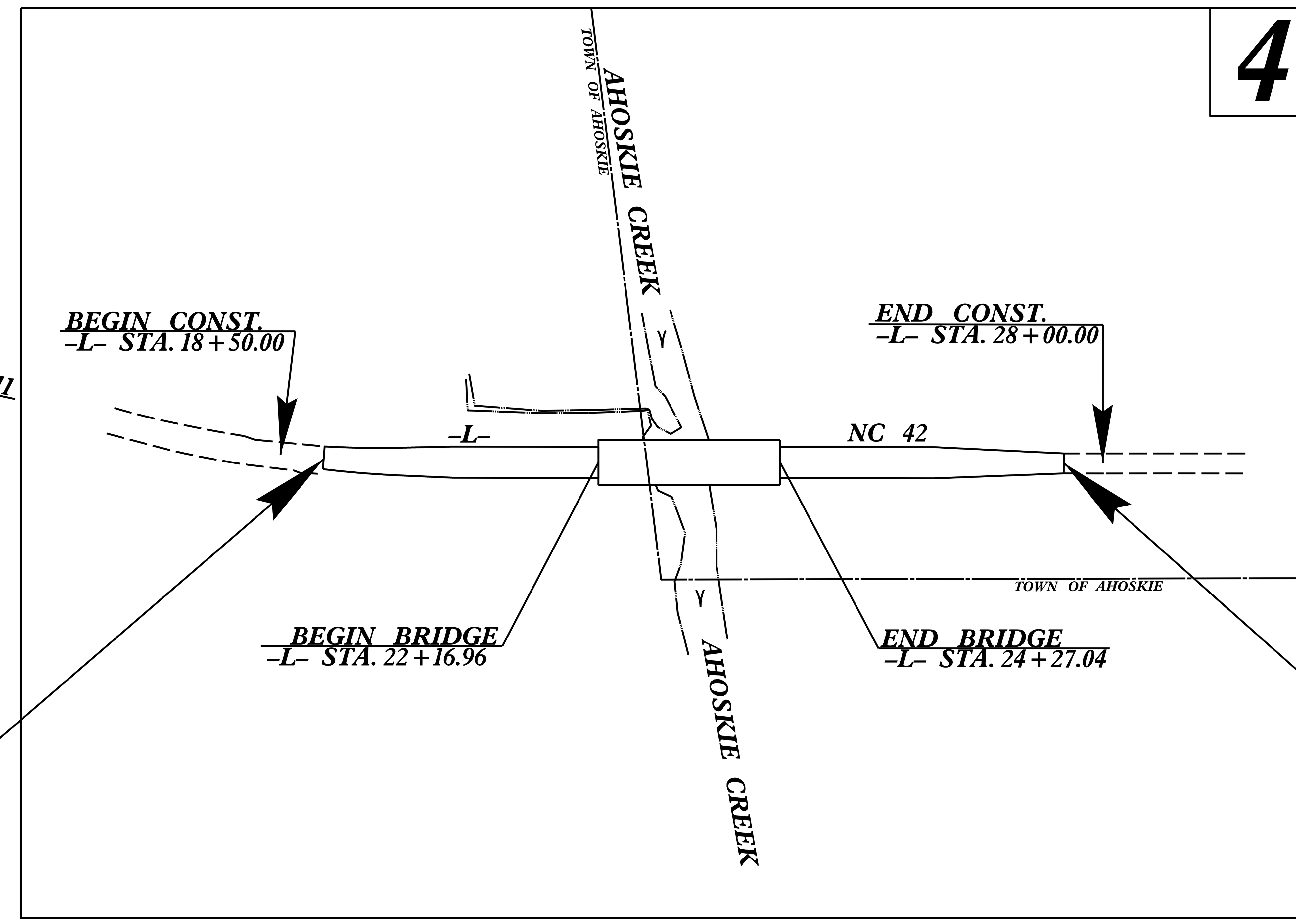

BEGIN TIP PROJECT 17BP.1.R.58
–L– STA. 19+00.00

END TIP PROJECT 17BP.1.R.58
–L– STA. 27+55.00

EROSION AND SEDIMENT CONTROL MEASURES

Std. #	Description	Symbol
1630.03	Temporary Silt Ditch	
1630.05	Temporary Diversion	
1605.01	Temporary Silt Fence	
1606.01	Special Sediment Control Fence	
1622.01	Temporary Berms and Slope Drains	
1630.02	Silt Basin Type B	
1633.01	Temporary Rock Silt Check Type-A	
	Temporary Rock Silt Check Type-A with Matting and Polyacrylamide (PAM)	
1633.02	Temporary Rock Silt Check Type-B	
	Wattle / Coir Fiber Wattle	
	Wattle / Coir Fiber Wattle with Polyacrylamide (PAM)	
1634.01	Temporary Rock Sediment Dam Type-A	
1634.02	Temporary Rock Sediment Dam Type-B	
1635.01	Rock Pipe Inlet Sediment Trap Type-A	
1635.02	Rock Pipe Inlet Sediment Trap Type-B	
1630.04	Stilling Basin	
1630.06	Special Stilling Basin	
	Rock Inlet Sediment Trap:	
1632.01	Type A	A
1632.02	Type B	B
1632.03	Type C	C
	Skimmer Basin	
	Tiered Skimmer Basin	
	Infiltration Basin	

THIS PROJECT CONTAINS EROSION CONTROL PLANS FOR CLEARING AND GRUBBING PHASE OF CONSTRUCTION.

Anne Gamber, PE, CFM
LEVEL IIIA NAME

3022
LEVEL IIIA CERTIFICATION NO.

PRELIMINARY PLANS
DO NOT USE FOR CONSTRUCTION

A PORTION OF THIS PROJECT IS WITHIN THE MUNICIPAL BOUNDARIES OF AHOSKIE.
CLEARING ON THIS PROJECT SHALL BE PERFORMED TO THE LIMITS ESTABLISHED BY METHOD II.

CONTRACT:

$$$$USERNAME$$$$
$$$$$$$$$$$$$$$$DGN$$$$$$$$$$$$$$$$

GRAPHIC SCALE

0
PLANS

0
PROFILE (HORIZONTAL)

0
PROFILE (VERTICAL)

FUNC CLASS =
MAJOR COLLECTOR

REGIONAL TIER

2012 STANDARD SPECIFICATIONS

THESE EROSION AND SEDIMENT CONTROL PLANS COMPLY WITH THE REGULATIONS SET FORTH BY THE NCG–010000 GENERAL CONSTRUCTION PERMIT EFFECTIVE AUGUST 3, 2011 ISSUED BY THE NORTH CAROLINA DEPARTMENT OF ENVIRONMENT AND NATURAL RESOURCES DIVISION OF WATER QUALITY.

WETHERILL ENGINEERING

Prepared for the North Carolina Department of Transportation in the Office of:
559 JONES FRANKLIN ROAD
SUITE 164
Raleigh, N.C. 27606
License No. F–0377
Bus: 919 851 8077
Fax: 919 851 8107

RIGHT OF WAY DATE:	EDWARD G. WETHERILL, PE PROJECT ENGINEER
LETTING DATE:	BOB A. MAY, PE PROJECT DESIGN ENGINEER
NCDOT CONTACT:	JOHN S. ABEL, JR. DIVISION 1 BRIDGE PROGRAM MANAGER

Roadway Standard Drawings

The following roadway english standards as appear in "Roadway Standard Drawings"– Roadway Design Unit – N. C. Department of Transportation – Raleigh, N. C., dated January 2012 and the latest revison thereto are applicable to this project and by reference hereby are considered a part of these plans.

1604.01	Railroad Erosion Control Detail
1605.01	Temporary Silt Fence
1606.01	Special Sediment Control Fence
1607.01	Gravel Construction Entrance
1622.01	Temporary Berms and Slope Drains
1630.01	Riser Basin
1630.02	Silt Basin Type B
1630.03	Temporary Silt Ditch
1630.04	Stilling Basin
1630.05	Temporary Diversion
1630.06	Special Stilling Basin
1631.01	Matting Installation
1632.01	Rock Inlet Sediment Trap Type A
1632.02	Rock Inlet Sediment Trap Type B
1632.03	Rock Inlet Sediment Trap Type C
1633.01	Temporary Rock Silt Check Type A
1633.02	Temporary Rock Silt Check Type B
1634.01	Temporary Rock Sediment Dam Type A
1634.02	Temporary Rock Sediment Dam Type B
1635.01	Rock Pipe Inlet Sediment Trap Type A
1635.02	Rock Pipe Inlet Sediment Trap Type B
1640.01	Coir Fiber Baffle
1645.01	Temporary Stream Crossing

PROJECT REFERENCE NO.	SHEET NO.
17BP.J.R.58	EC-2
R/W SHEET NO.	

SILT FENCE WATTLE BREAK DETAIL

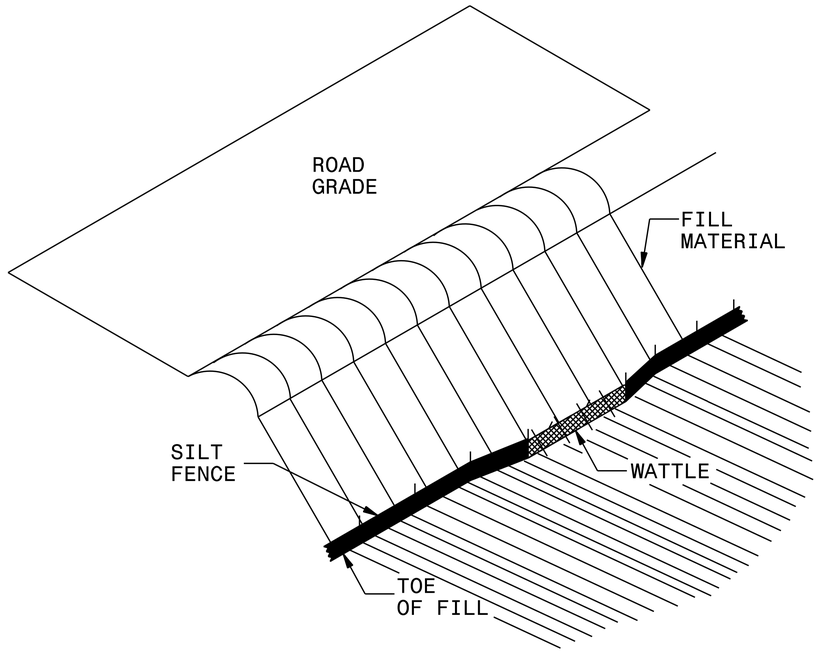

ISOMETRIC VIEW

NOTES:

USE MINIMUM 12 IN. DIAMETER EXCELSIOR WATTLE AND LENGTH OF 10 FT.

EXCAVATE A 1 TO 2 INCH TRENCH FOR WATTLE TO BE PLACED.

DO NOT PLACE WATTLE ON TOE OF SLOPE.

USE 2 FT. WOODEN STAKES WITH A 2 IN. BY 2 IN. NOMINAL CROSS SECTION.

INSTALL A MINIMUM OF 2 UPSLOPE STAKES AND 4 DOWNSLOPE STAKES AT AN ANGLE TO WEDGE WATTLE TO GROUND.

PROVIDE STAPLES MADE OF 0.125 IN. DIAMETER STEEL WIRE FORMED INTO A U SHAPE NOT LESS THAN 12″ IN LENGTH.

INSTALL STAPLES APPROXIMATELY EVERY 1 LINEAR FOOT ON BOTH SIDES OF WATTLE AND AT EACH END TO SECURE IT TO THE SOIL.

WATTLE INSTALLATION CAN BE ON OUTSIDE OF THE SILT FENCE AS DIRECTED.

INSTALL TEMPORARY SILT FENCE IN ACCORDANCE WITH SECTION 1605 OF THE STANDARD SPECIFICATIONS.

INSET A

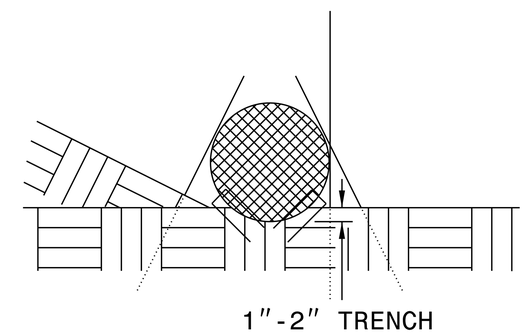

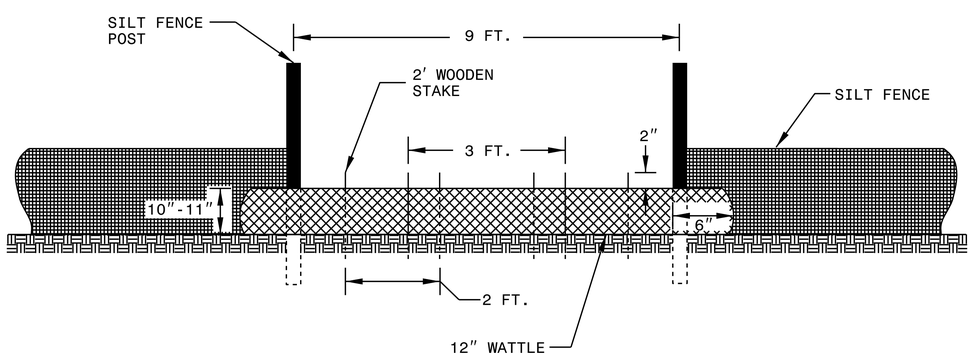

VIEW FROM SLOPE

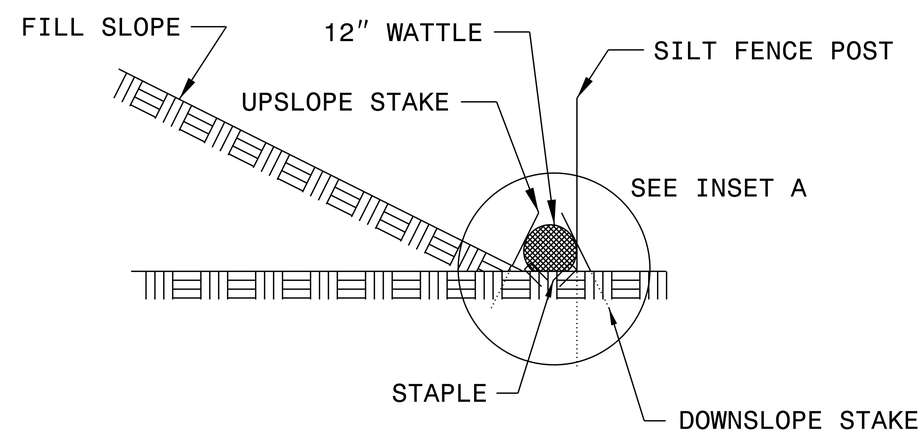

SIDE VIEW

PROJECT REFERENCE NO.	SHEET NO.
17BPJR.58	EC-2A
R/W SHEET NO.	

TEMPORARY ROCK SILT CHECK TYPE 'A' WITH EXCELSIOR MATTING AND POLYACRYLAMIDE (PAM)

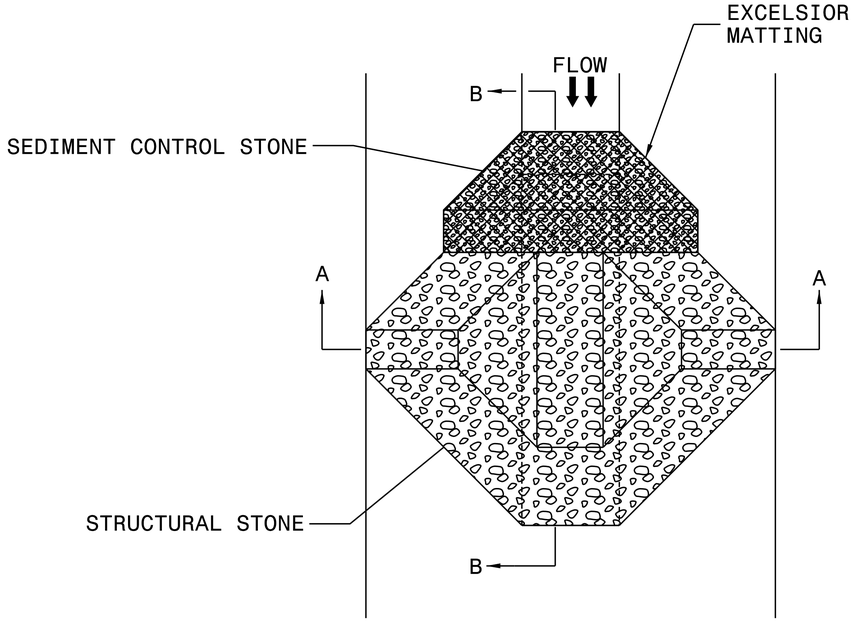

PLAN

NOTES

USE EXCELSIOR FOR MATTING MATERIAL AND ANCHOR MATTING SECTION AT TOP AND BOTTOM WITH CLASS B STONE.

PRIOR TO POLYACRYLAMIDE (PAM) APPLICATION, OBTAIN A SOIL SAMPLE FROM PROJECT LOCATION, AND FROM OFFSITE MATERIAL, AND ANALYZE FOR APPROPRIATE PAM FLOCCULANT TO BE APPLIED TO EACH ROCK SILT CHECK.

INITIALLY APPLY 4 OUNCES OF POLYACRYLAMIDE (PAM) TO TOP OF MATTING SECTION AND AFTER EVERY RAINFALL EVENT THAT EQUALS OR EXCEEDS 0.50 INCHES.

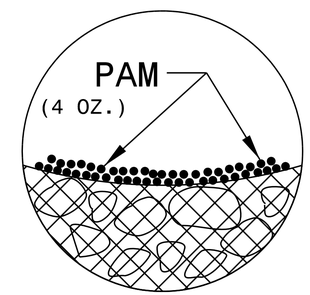

INSET A

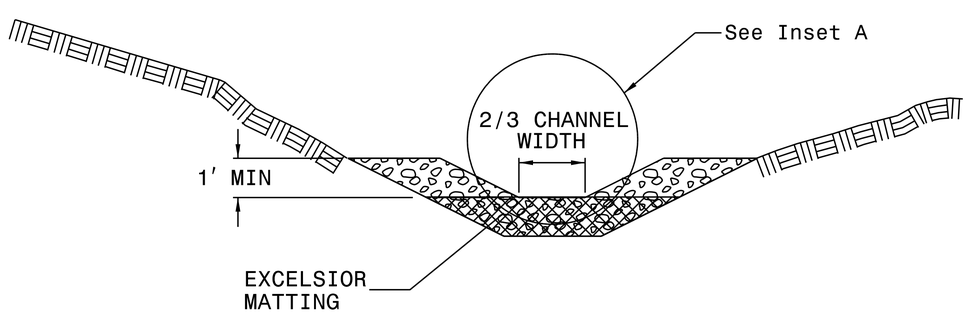

SECTION A-A

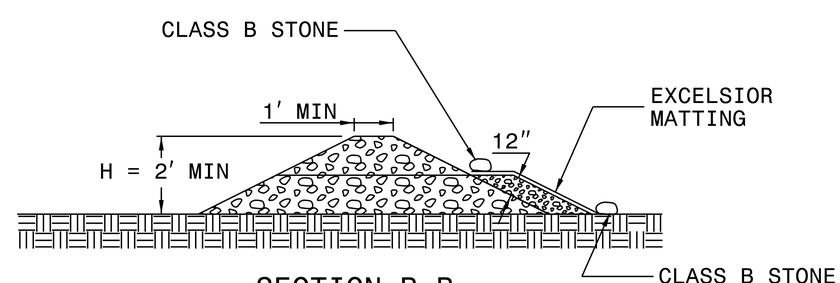

SECTION B-B

NOT TO SCALE

PROJECT REFERENCE NO.	SHEET NO.
17BP.JR.58	EC-3

DIVISION OF HIGHWAYS
STATE OF NORTH CAROLINA

SOIL STABILIZATION SUMMARY SHEET

MATTING FOR EROSION CONTROL

CONST SHEET NO.	LINE	FROM STATION	TO STATION	SIDE	ESTIMATE (SY)
4	-L-	20+00	21+00	LT	146
4	-L-	24+27.5	26+00	RT	323
				SUBTOTAL	469
MISCELLANEOUS MATTING TO BE INSTALLED AS DIRECTED BY THE ENGINEER					24
				TOTAL	493
				SAY	500

MATTING FOR EROSION CONTROL

CONST SHEET NO.	LINE	FROM STATION	TO STATION	SIDE	ESTIMATE (SY)

PROJECT REFERENCE NO.	SHEET NO.
17BP.J.R.58	EC-3A

DIVISION OF HIGHWAYS
STATE OF NORTH CAROLINA

SOIL STABILIZATION TIMEFRAMES

SITE DESCRIPTION	STABILIZATION TIME	TIMEFRAME EXCEPTIONS
PERIMETER DIKES, SWALES, DITCHES AND SLOPES	7 DAYS	NONE
HIGH QUALITY WATER (HQW) ZONES	7 DAYS	NONE
SLOPES STEEPER THAN 3:1	7 DAYS	IF SLOPES ARE 10' OR LESS IN LENGTH AND ARE NOT STEEPER THAN 2:1, 14 DAYS ARE ALLOWED.
SLOPES 3:1 OR FLATTER	14 DAYS	7 DAYS FOR SLOPES GREATER THAN 50' IN LENGTH.
ALL OTHER AREAS WITH SLOPES FLATTER THAN 4:1	14 DAYS	NONE, EXCEPT FOR PERIMETERS AND HQW ZONES.

PROJECT REFERENCE NO.	SHEET NO.
17BP.1.R.58	EC-4/CONST.4
R/W SHEET NO.	___

CLEARING AND GRUBBING
EROSION CONTROL FOR
CONSTRUCTION SHEET 4

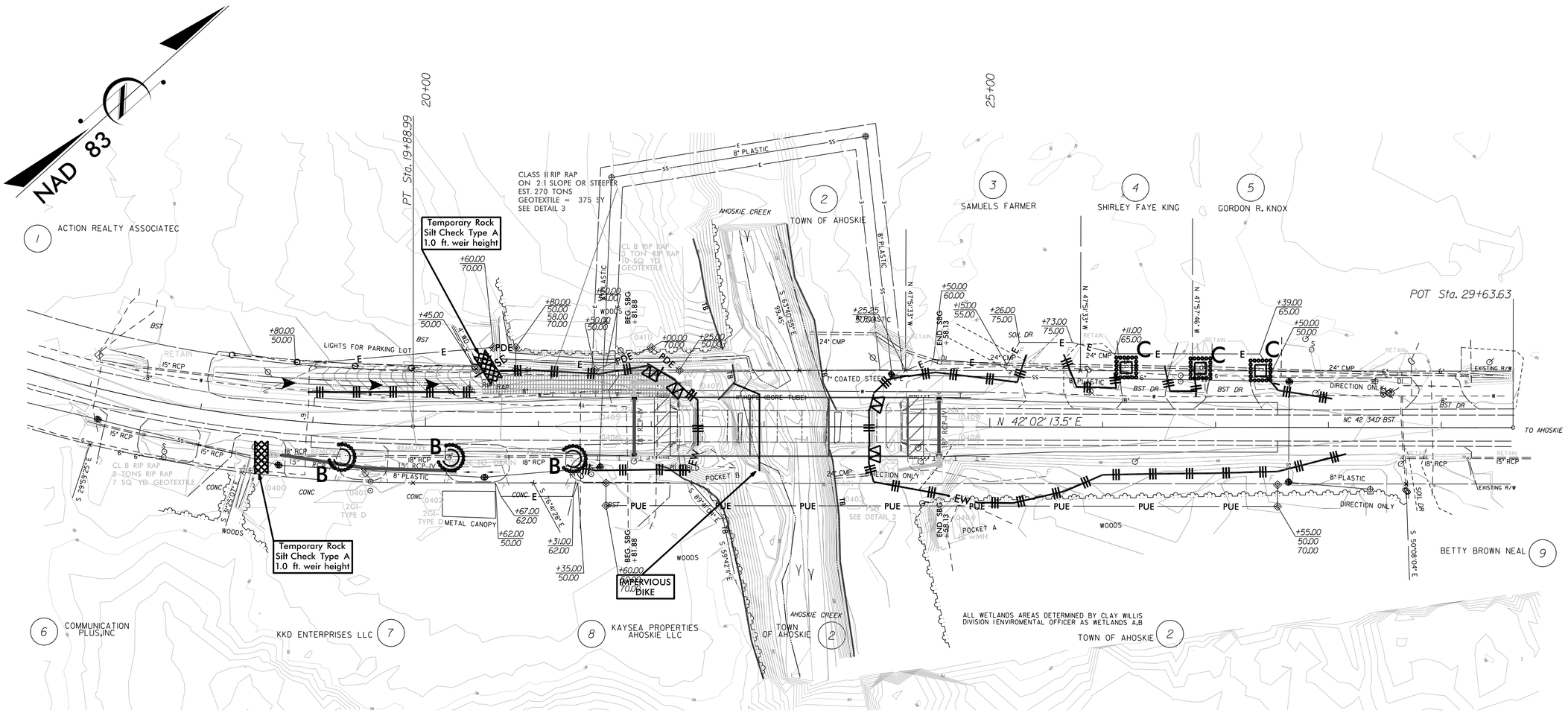

NOTE:
PERIMETER EROSION CONTROL MEASURES SHALL BE INSTALLED DURING CLEARING AND GRUBBING PHASE.

PROJECT REFERENCE NO.	SHEET NO.
17BP.1.R.58	EC-5/CONST.4
R/W SHEET NO.	
	___

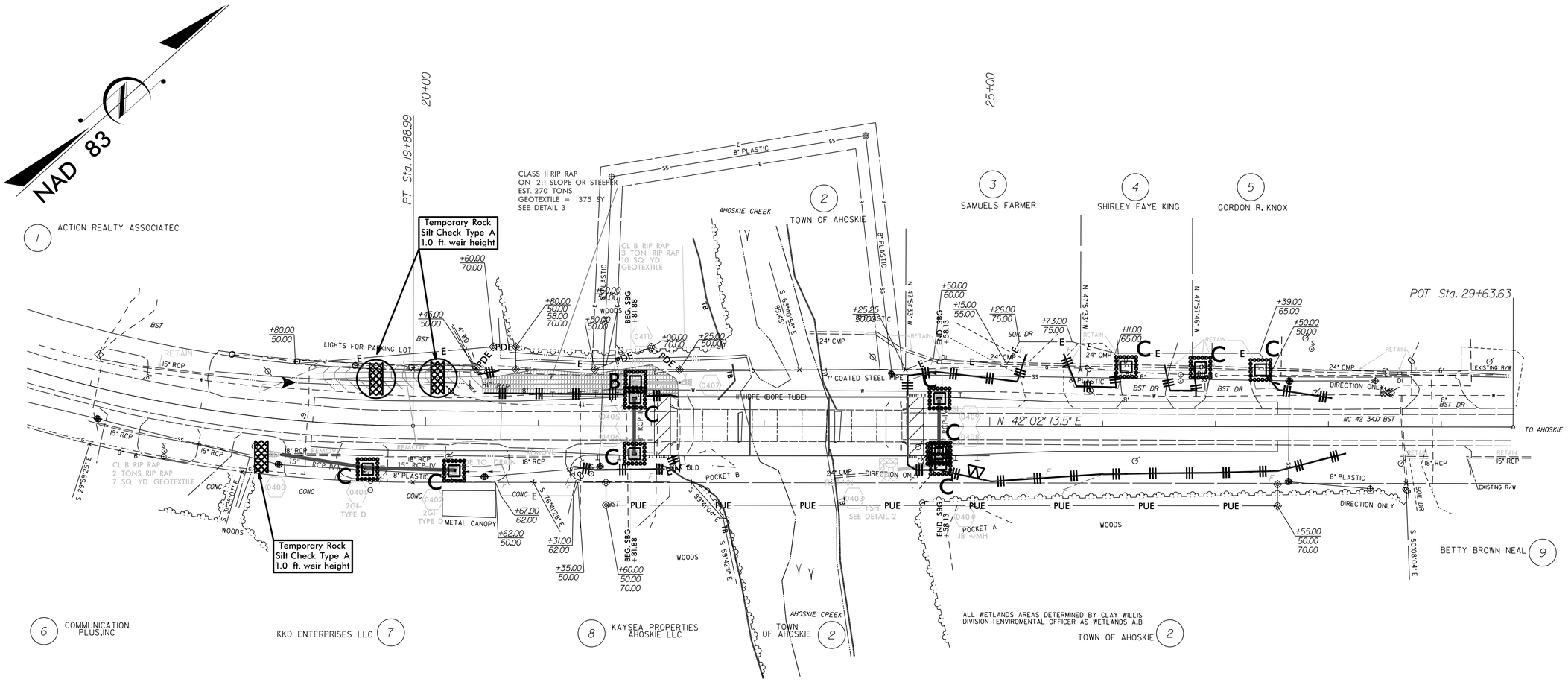

PROJ. REFERENCE NO.	SHEET NO.
17BP.1.R.58	X-1A

STATE OF NORTH CAROLINA
DIVISION OF HIGHWAYS

NOTE: EMBANKMENT COLUMN DOES NOT INCLUDE BACKFILL FOR UNDERCUT

CROSS-SECTION SUMMARY

Station L	Uncl. Exc. (cu. yd.)	Embt (cu. yd.)
19+00.00	0	0
19+50.00	17	99
20+00.00	20	118
20+50.00	18	128
21+00.00	7	156
21+50.00	0	237
22+00.00	0	407
22+16.96	0	168

Station L	Uncl. Exc. (cu. yd.)	Embt (cu. yd.)
24+27.04	0	0
24+50.00	0	198
25+00.00	0	430
25+50.00	0	309
26+00.00	0	145
26+50.00	2	79
27+00.00	8	50
27+50.00	16	39
27+55.00	2	3

Approximate quantities only. Unclassified excavation, shoulder borrow, fine grading, clearing and grubbing, breaking of existing pavement and removal of existing pavement will be paid for at the lump sum price for "Grading".

0 2.5 5	PROJ. REFERENCE NO.	SHEET NO.
	17BP.1.R.58	X-1

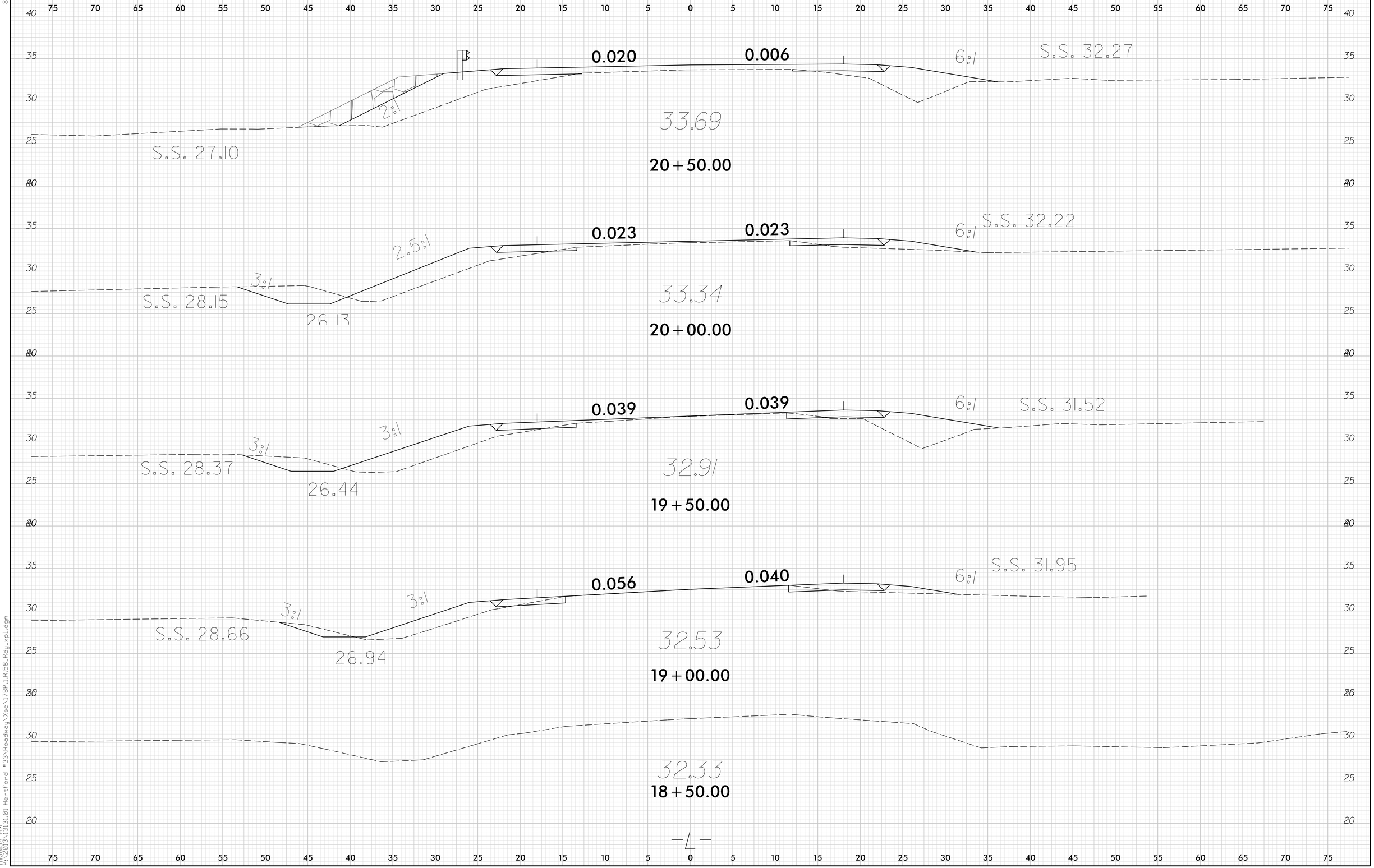

8/23/99

6/19/2014
11:08:30 AM
P:\2013\13131.01 Hertford #33\Roadway\Xsc\17BP.1.R.58_Rdy_xpl.dgn

0 2.5 5	PROJ. REFERENCE NO.	SHEET NO.
	17BP.1.R.58	X-2

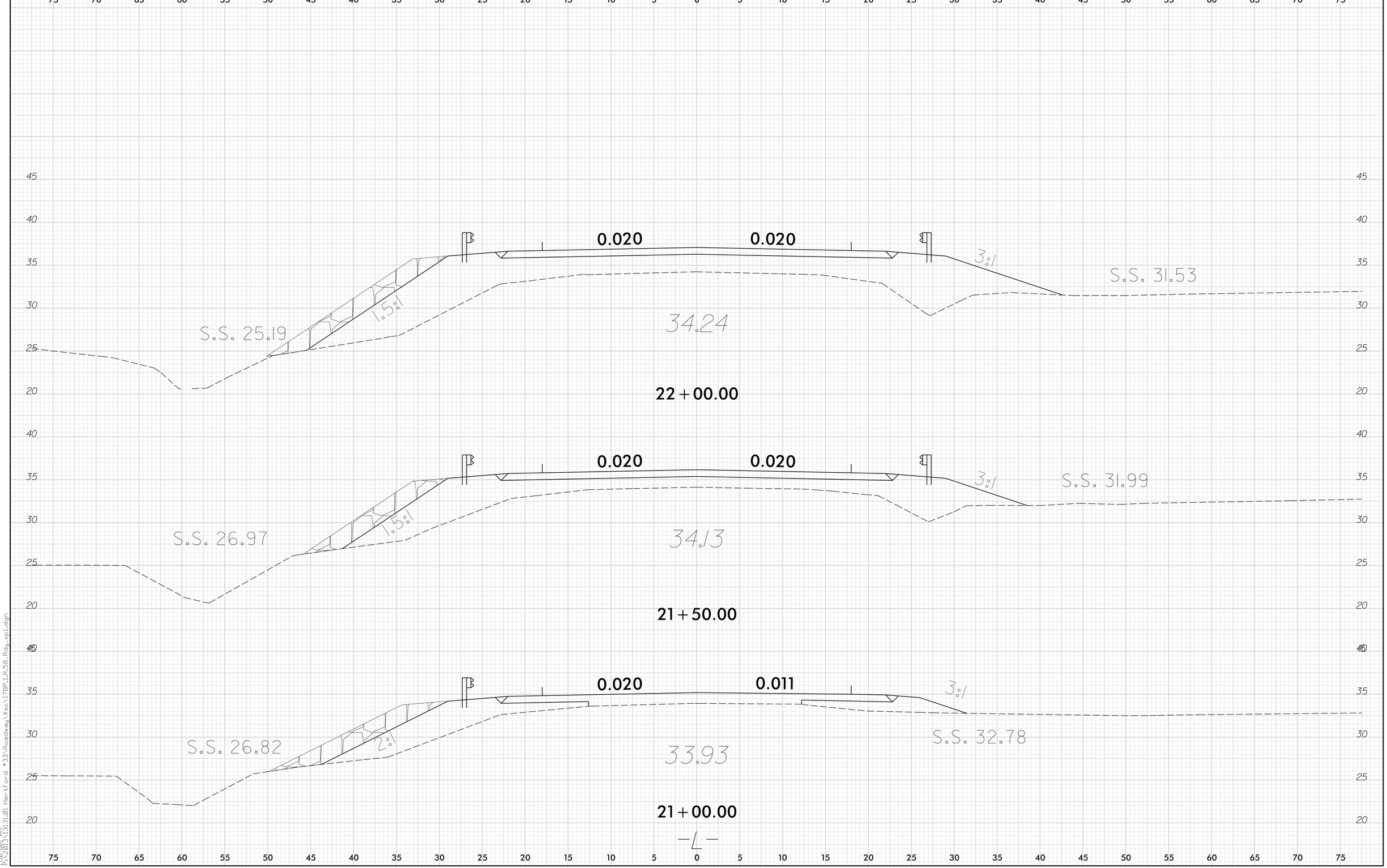

8/23/99

6/19/2014
11:09:01 AM
P:\2013\13131.01 Hertford #33\Roadway\Xsc\17BP.1.R.58_Rdy_xpl.dgn

0 2.5 5	PROJ. REFERENCE NO.	SHEET NO.
	17BP.1.R.58	X-3

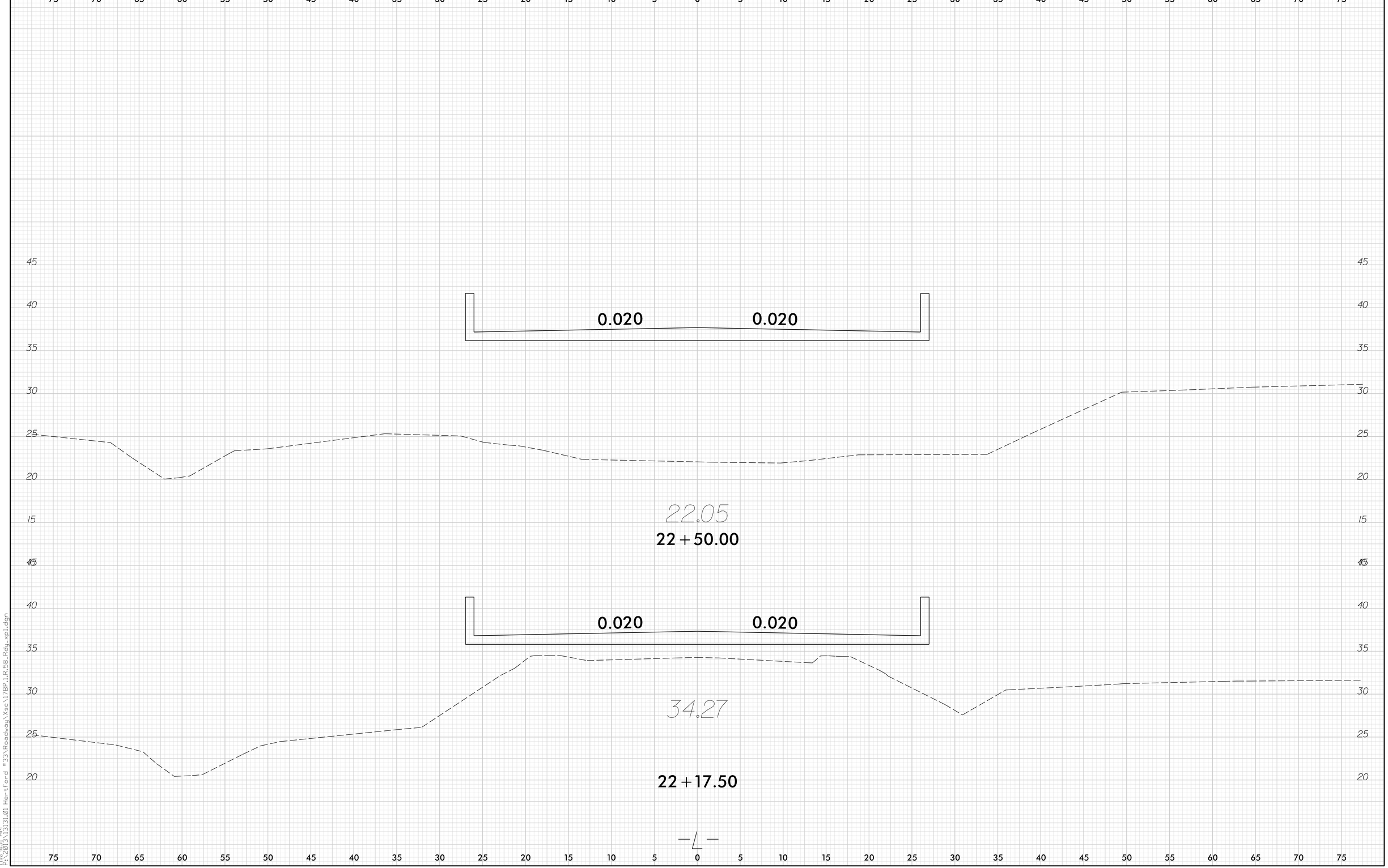

8/23/99

6/19/2014
11:09:51 AM
P:\2013\1131.01 Hertford #33\Roadway\Xsec\17BP.1.R.58_Rdy_xpl.dgn

0 2.5 5	PROJ. REFERENCE NO.	SHEET NO.
	17BP.1.R.58	X-4

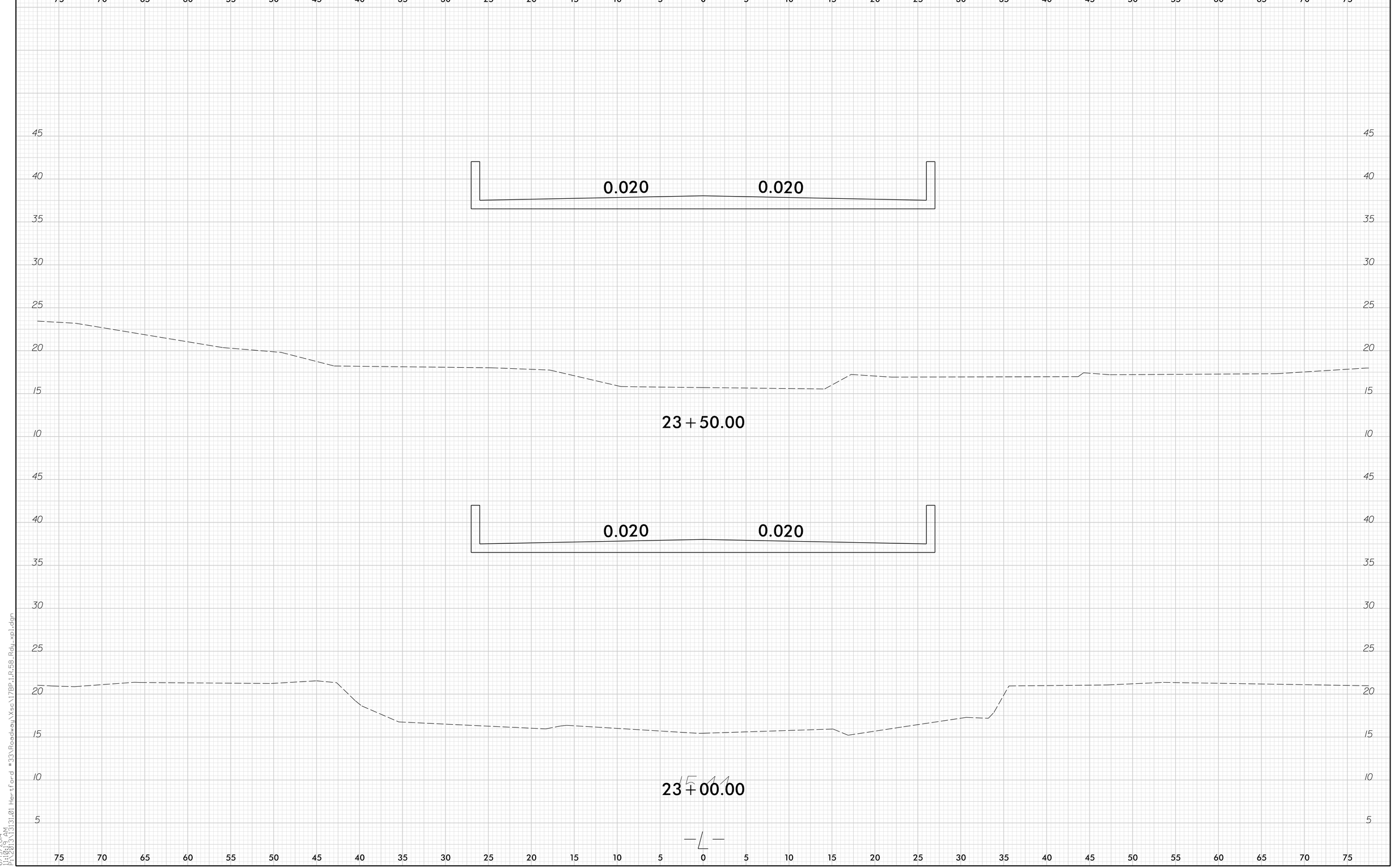

8/23/99

5/19/2014
11:19:19 AM
P:\2013\3131.01 Hertford #33\Roadway\Xsc\17BP.1.R.58_Rdy_xpl.dgn

0 2.5 5	PROJ. REFERENCE NO.	SHEET NO.
	17BP.1.R.58	X-5

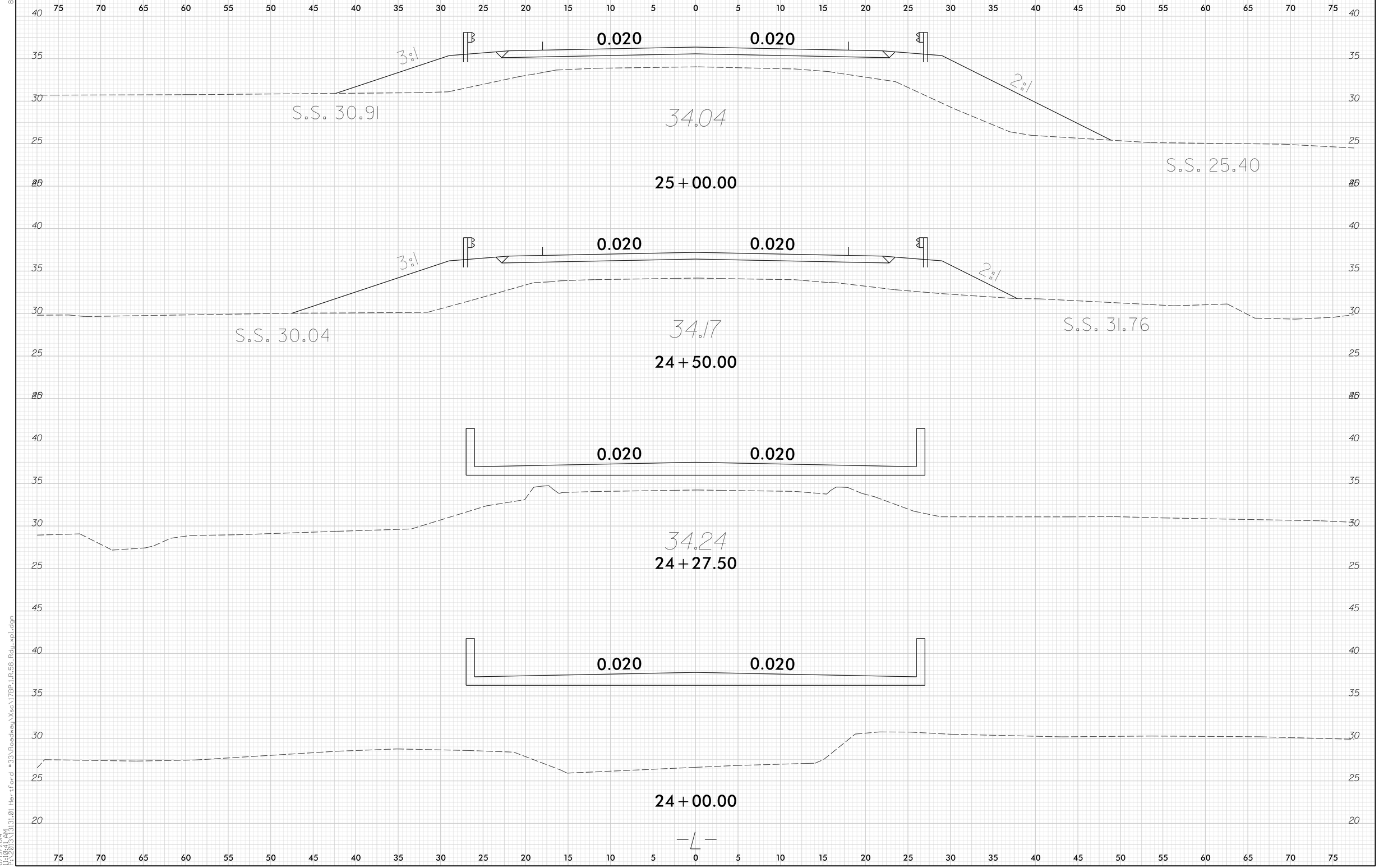

8/23/99

6/19/2014
11:10:41 AM
P:\2013\13131.01 Hertford #33\Roadway\Xsc\17BP.1.R.58_Rdy_xpl.dgn

0 2.5 5	PROJ. REFERENCE NO.	SHEET NO.
	17BP.1.R.58	X-6

8/23/99

6/19/2014
11:42:24 AM
P:\2013\13131.01 Hertford #33\Roadway\Xsc\17BP.1.R.58_Rdy_xpl.dgn

0 2.5 5	PROJ. REFERENCE NO.	SHEET NO.
	17BP.1.R.58	X-7

8/23/99

6/19/2014
1:11:24 AM
P:\2013\1313.01 Hertford #33\Roadway\Xsc\17BP.1.R.58_Rdy_xp1.dgn

DocuSign Envelope ID: 9470C23F-75AA-488A-BF2C-36FEFAA85328

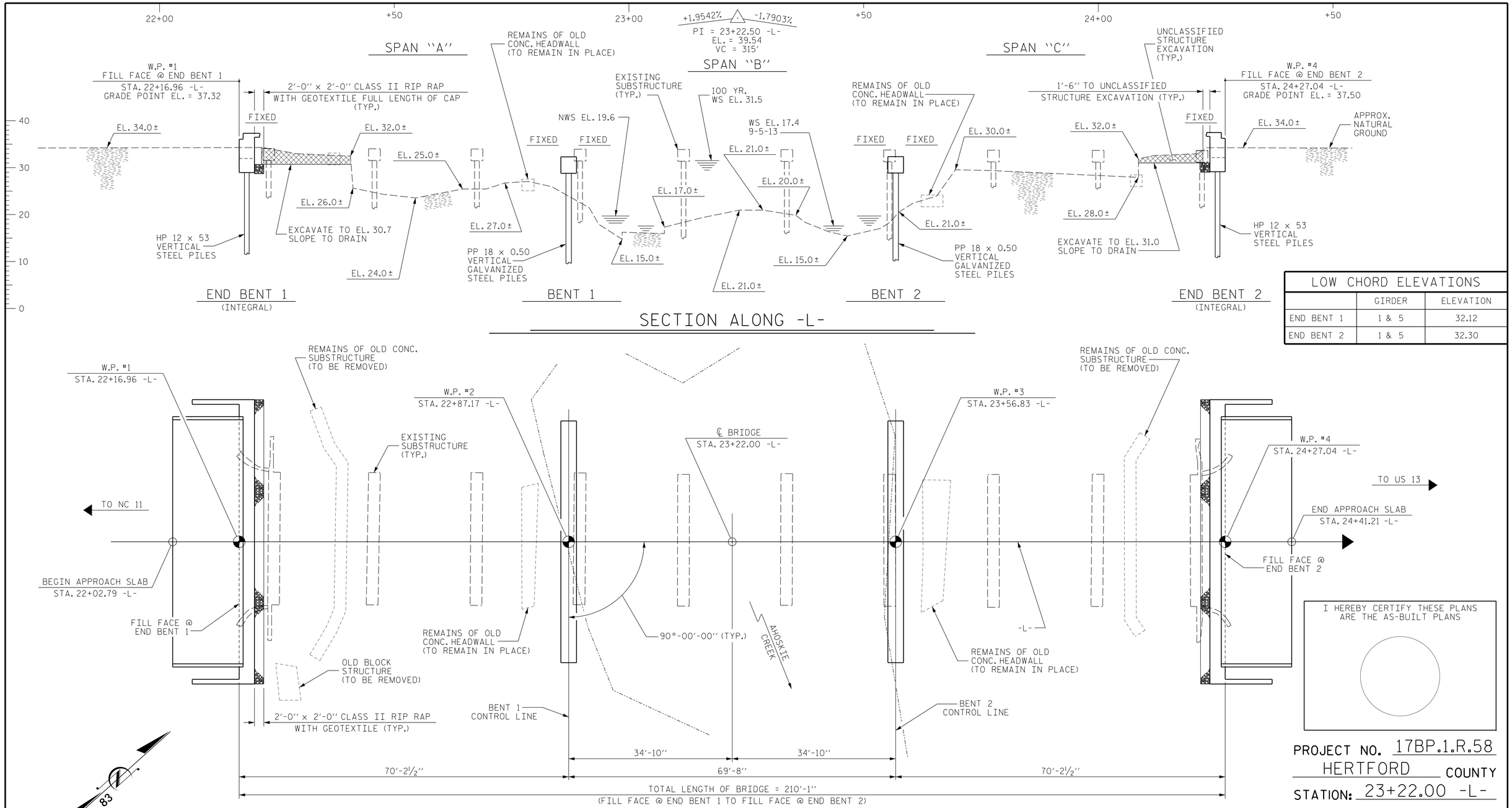

LOW CHORD ELEVATIONS		
	GIRDER	ELEVATION
END BENT 1	1 & 5	32.12
END BENT 2	1 & 5	32.30

PLAN

(PILES NOT SHOWN IN PLAN VIEW)

HYDRAULIC DATA

DESIGN DISCHARGE---------- 4637 CFS
FREQUENCY OF DESIGN FLOOD------ 50 YR.
DESIGN HIGH WATER ELEVATION---- 30.4
DRAINAGE AREA---------- 63.3 SQ.MI.
BASE DISCHARGE (Q100)--------- 6232 CFS
BASE HIGH WATER ELEVATION------ 31.5

OVERTOPPING FLOOD DATA
OVERTOPPING DISCHARGE---------- 5300 CFS
FREQUENCY OF OVERTOPPING FLOOD- 50+YRS
OVERTOPPING FLOOD ELEVATION---- 30.6

I HEREBY CERTIFY THESE PLANS ARE THE AS-BUILT PLANS

PROJECT NO. 17BP.1.R.58
HERTFORD COUNTY
STATION: 23+22.00 -L-

SHEET 1 OF 3 REPLACES BRIDGE No. 33

STATE OF NORTH CAROLINA
DEPARTMENT OF TRANSPORTATION
RALEIGH

GENERAL DRAWING

BRIDGE ON NC 42
OVER AHOSKIE CREEK
BETWEEN NC 11 & US 13

NORTH CAROLINA PROFESSIONAL SEAL 030400 ENGINEER GREGORY M. GILLAND

WETHERILL ENGINEERING
559 Jones Franklin Rd. Suite 164
Raleigh, N.C. 27606
Bus: 919 851 8077
Fax: 919 851 8107
License: F-0377

TRANSPORTATION PLANNING/DESIGN - BRIDGE/STRUCTURE DESIGN
CIVIL/SITE DESIGN - GIS/GPS - CONSTRUCTION OBSERVATION

REVISIONS						SHEET NO.
NO.	BY:	DATE:	NO.	BY:	DATE:	S-1
1			3			TOTAL SHEETS
2			4			32

DRAWN BY : J.M. BRITT DATE : 6-3-14
CHECKED BY: G.M. GILLAND DATE : 6-9-14
DESIGN ENGINEER OF RECORD: G.M. GILLAND DATE : 6-9-14

P:\2013\1313.0.1 Hertford #33\Structures\DN\GHertford_33_sd_GD_WEI.dgn
7/1/2014 11:03:40 AM

DocuSign Envelope ID: 9470C23F-75AA-488A-BF2C-36FEFAA85328

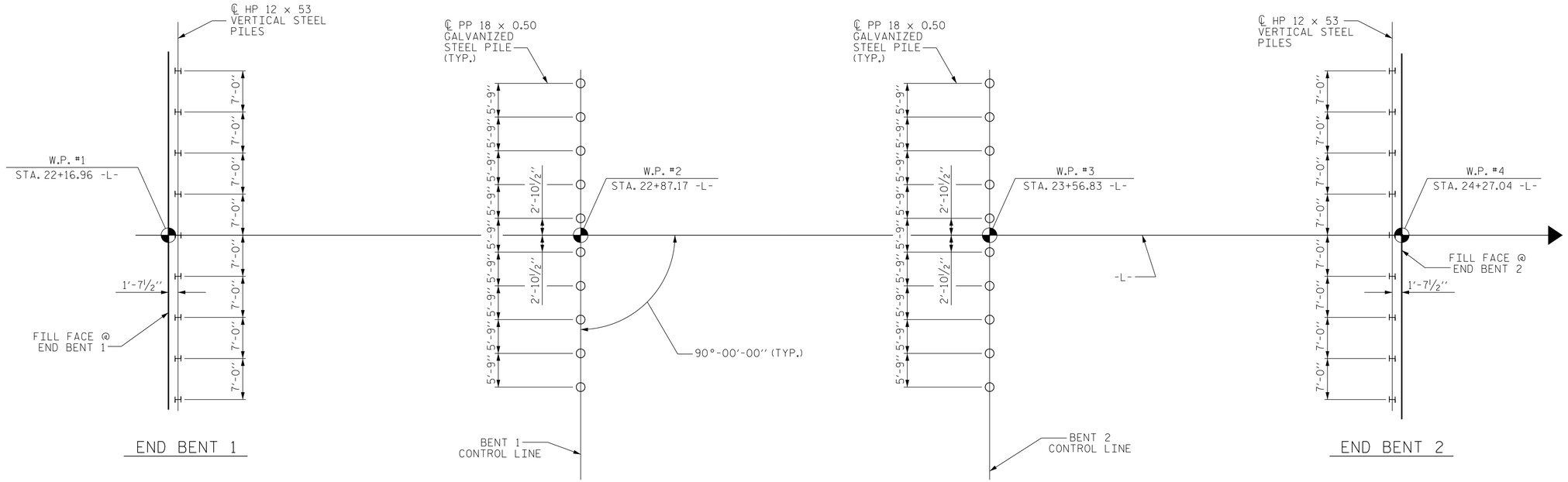

FOUNDATION LAYOUT

FOUNDATION NOTES :

FOR PILES, SEE SECTION 450 OF THE STANDARD SPECIFICATIONS.

PILES AT END BENTS 1 AND 2 ARE DESIGNED FOR A FACTORED RESISTANCE OF 100 TONS PER PILE. DRIVE PILES TO A REQUIRED DRIVING RESISTANCE OF 150 TONS PER PILE.

PILES AT INTERIOR BENTS 1 AND 2 ARE DESIGNED FOR A FACTORED RESISTANCE OF 140 TONS PER PILE. DRIVE PILES TO A REQUIRED DRIVING RESISTANCE OF 240 TONS PER PILE. THIS REQUIRED DRIVING RESISTANCE INCLUDES ADDITIONAL RESISTANCE FOR SCOUR.

INSTALL PILES AT INTERIOR BENTS 1 AND 2 TO A TIP ELEVATION NO HIGHER THAN -21.0.

STEEL PIPE PLATES ARE REQUIRED FOR STEEL PIPE PILES AT INTERIOR BENTS 1 AND 2. USE WITH AN OUTSIDE DIAMETER EQUAL TO THE PIPE PILE DIAMETER. FOR STEEL PIPE PILE PLATES, SEE SECTION 450 OF THE STANDARD SPECIFICATIONS.

THE SCOUR CRITICAL ELEVATION FOR INTERIOR BENTS 1 AND 2 IS ELEVATION 9.0. SCOUR CRITICAL ELEVATIONS ARE USED TO MONITOR POSSIBLE SCOUR PROBLEMS DURING THE LIFE OF THE STRUCTURE.

IT HAS BEEN ESTIMATED THAT A HAMMER WITH AN EQUIVALENT RATED ENERGY IN THE RANGE OF 70,000 FT-LBS PER BLOW WILL BE REQUIRED TO DRIVE PILES AT INTERIOR BENTS 1 AND 2. THIS ESTIMATED ENERGY RANGE DOES NOT RELEASE THE CONTRACTOR FROM PROVIDING DRIVING EQUIPMENT IN ACCORDANCE WITH SUBARTICLE 450-3 (D)(2) OF THE STANDARD SPECIFICATIONS.

TESTING THE FIRST PRODUCTION PILES WITH THE PDA DURING DRIVING, RESTRIKING OR REDRIVING IS REQUIRED FOR END BENTS 1 AND 2. FOR PDA TESTING, SEE SECTION 450 OF THE STANDARD SPECIFICATIONS AND FOR PILE DRIVING CRITERIA, SEE PILE DRIVING CRITERIA PROVISION.

TESTING THE FIRST PRODUCTION PILES WITH THE PDA DURING DRIVING, RESTRIKING OR REDRIVING IS REQUIRED AT BOTH INTERIOR BENTS 1 AND 2. FOR PDA TESTING, SEE SECTION 450 OF THE STANDARD SPECIFICATIONS AND FOR PILE DRIVING CRITERIA, SEE PILE DRIVING CRITERIA PROVISION.

PROJECT NO. 17BP.1.R.58
HERTFORD COUNTY
STATION: 23+22.00 -L-

SHEET 2 OF 3

STATE OF NORTH CAROLINA
DEPARTMENT OF TRANSPORTATION
RALEIGH

GENERAL DRAWING

BRIDGE ON NC 42
OVER AHOSKIE CREEK
BETWEEN NC 11 & US 13

NORTH CAROLINA PROFESSIONAL SEAL 047400 ENGINEER GREGORY M. GILLAND

WETHERILL ENGINEERING
559 Jones Franklin Rd. Suite 164
Raleigh, N.C. 27606
Bus: 919 851 8077
Fax: 919 851 8107
License: F-0377

TRANSPORTATION PLANNING/DESIGN - BRIDGE/STRUCTURE DESIGN
CIVIL/SITE DESIGN - GIS/GPS - CONSTRUCTION OBSERVATION

REVISIONS						SHEET NO.
NO.	BY:	DATE:	NO.	BY:	DATE:	S-2
1			3			TOTAL SHEETS
2			4			32

DRAWN BY : J.M. BRITT DATE : 6-4-14
CHECKED BY: G.M. GILLAND DATE : 6-9-14
DESIGN ENGINEER OF RECORD: G.M. GILLAND DATE : 6-9-14

P:\2013\1313.01 Hertford #33\Structures\DWG\Hertford_33_sd_GD_WE1.dgn
7/1/2014 11:05:35 AM

DocuSign Envelope ID: 9470C23F-75AA-488A-BF2C-36FEFAA85328

TOTAL BILL OF MATERIAL

	REMOVAL OF EXISTING STRUCTURE	PDA TESTING	UNCLASSIFIED STRUCTURE EXCAVATION	REINFORCED CONCRETE DECK SLAB	GROOVING BRIDGE FLOORS	CLASS A CONCRETE	BRIDGE APPROACH SLABS	REINFORCING STEEL	45" PRESTRESSED CONCRETE GIRDERS		HP 12 x 53 STEEL PILES		PP 18 x 0.50 GALVANIZED STEEL PILES		PIPE PILE PLATES	PILE REDRIVES	TWO BAR METAL RAIL	1'-2" x 3'-3" CONCRETE PARAPET	RIP RAP CLASS II (2'-0" THICK)	GEOTEXTILE FOR DRAINAGE	ELASTOMERIC BEARINGS
	LUMP SUM	EACH	LUMP SUM	SQ.FT.	SQ.FT.	CU.YDS.	LUMP SUM	LBS.	No.	LIN.FT.	NO.	LIN.FT.	NO.	LIN.FT.	No.	No.	LIN.FT.	LIN.FT.	TONS	SQ. YDS.	LUMP SUM
SUPERSTRUCTURE				11,467	11,618				15	1,032.51							401.83	416.83			
END BENT 1						25.9		4,233			9	720				4			12.1	13.5	
BENT 1						24.4		3,492					10	1,000	10	5					
BENT 2						24.4		3,492					10	1,100	10	5					
END BENT 2						25.9		4,233			9	720				4			12.1	13.5	
TOTAL	LUMP SUM	3	LUMP SUM	11,467	11,618	100.6	LUMP SUM	15,450	15	1,032.51	18	1,440	20	2,100	20	18	401.83	416.83	24.2	27.0	LUMP SUM

NOTES :

ASSUMED LIVE LOAD = HL93 OR ALTERNATE LOADING.

THIS BRIDGE HAS BEEN DESIGNED IN ACCORDANCE WITH THE REQUIREMENTS OF THE AASHTO LRFD BRIDGE DESIGN SPECIFICATIONS.

THIS BRIDGE IS LOCATED IN SEISMIC ZONE 1.

FOR OTHER DESIGN DATA AND GENERAL NOTES, SEE SHEET SN.

FOR GROUT FOR STRUCTURES, SEE SPECIAL PROVISIONS.

PRESTRESSED CONCRETE DECK PANELS MAY BE USED IN LIEU OF METAL STAY-IN-PLACE FORMS IN ACCORDANCE WITH ARTICLE 420-3 OF THE STANDARD SPECIFICATIONS.

REMOVABLE FORMS MAY BE USED IN LIEU OF METAL STAY-IN-PLACE FORMS IN ACCORDANCE WITH ARTICLE 420-3 OF THE STANDARD SPECIFICATIONS.

NEEDLE BEAMS WILL NOT BE ALLOWED UNLESS OTHERWISE CALLED FOR ON THE PLANS OR APPROVED BY THE ENGINEER.

THE MATERIAL SHOWN IN THE CROSS-HATCHED AREA SHALL BE EXCAVATED FOR A DISTANCE OF 30 FEET EACH SIDE OF CENTERLINE ROADWAY AS DIRECTED BY THE ENGINEER. THIS WORK WILL BE PAID FOR AT THE CONTRACT LUMP SUM PRICE FOR UNCLASSIFIED STRUCTURE EXCAVATION. SEE SECTION 412 OF THE STANDARD SPECIFICATIONS.

THIS STRUCTURE HAS BEEN DESIGNED IN ACCORDANCE WITH "HEC 18-EVALUATING SCOUR AT BRIDGES".

FOR EROSION CONTROL MEASURES, SEE EROSION CONTROL PLANS.

THE EXISTING STRUCTURE IS LOCATED AT THE SITE OF THE PROPOSED STRUCTURE AND SHALL BE REMOVED.

THE EXISTING STRUCTURE CONSISTS OF THE FOLLOWING :
9 SPANS OF REINFORCED CONCRETE SLAB ON PRESTRESSED CONCRETE CHANNELS
(1 @ 22'-9", 7 @ 22'-0", 1 @ 22'-9")
CLEAR ROADWAY WIDTH OF 28.2'
END BENTS AND BENTS OF REINFORCED CONCRETE CAPS WITH TIMBER PILES

THE EXISTING STRUCTURE IS PRESENTLY NOT POSTED FOR LOAD LIMIT. SHOULD THE STRUCTURAL INTEGRITY OF THE BRIDGE DETERIORATE DURING THE CONSTRUCTION OF THE PROPOSED BRIDGE, A LOAD LIMIT MAY BE POSTED AND MAY BE REDUCED AS FOUND NECESSARY DURING THE LIFE OF THE PROJECT.

PORTIONS OF AN OLD STRUCTURE LOCATED WITHIN THE AREAS OF UNCLASSIFIED STRUCTURE EXCAVATION SHALL BE REMOVED. COST OF REMOVAL OF THE CONCRETE STRUCTURES SHALL BE INCLUDED IN THE VARIOUS PAY ITEMS.

REMOVAL OF THE EXISTING BRIDGE SHALL BE PERFORMED SO AS NOT TO ALLOW DEBRIS TO FALL INTO THE WATER. THE CONTRACTOR SHALL REMOVE THE BRIDGE AND SUBMIT PLANS FOR DEMOLITION IN ACCORDANCE WITH ARTICLE 402-2 OF THE STANDARD SPECIFICATIONS.

THE SUBSTRUCTURE OF THE EXISTING BRIDGE INDICATED ON THE PLANS IS FROM THE BEST INFORMATION AVAILABLE. SINCE THIS INFORMATION IS SHOWN FOR THE CONVENIENCE OF THE CONTRACTOR, THE CONTRACTOR SHALL HAVE NO CLAIM WHATSOEVER AGAINST THE DEPARTMENT OF TRANSPORTATION FOR ANY DELAYS OR ADDITIONAL COST INCURRED BASED ON DIFFERENCES BETWEEN THE EXISTING BRIDGE SUBSTRUCTURE SHOWN ON THE PLANS AND THE ACTUAL CONDITIONS AT THE PROJECT SITE.

FOR INTERIOR BENTS 1 AND 2, ONLY PARTIAL GALVANIZING OF THE PILES IS REQUIRED. SEE INTERIOR BENT SHEETS FOR REQUIRED GALVANIZED LENGTHS. PAYMENT FOR PARTIALLY GALVANIZED PILES WILL BE MADE UNDER THE CONTRACT UNIT PRICE FOR GALVANIZED STEEL PILES.

FOR SUBMITTAL OF WORKING DRAWINGS, SEE SPECIAL PROVISIONS.

FOR FALSEWORK AND FORMWORK, SEE SPECIAL PROVISIONS.

FOR CRANE SAFETY, SEE SPECIAL PROVISIONS.

FOR PLACING LOAD ON STRUCTURE MEMBERS, SEE SPECIAL PROVISIONS.

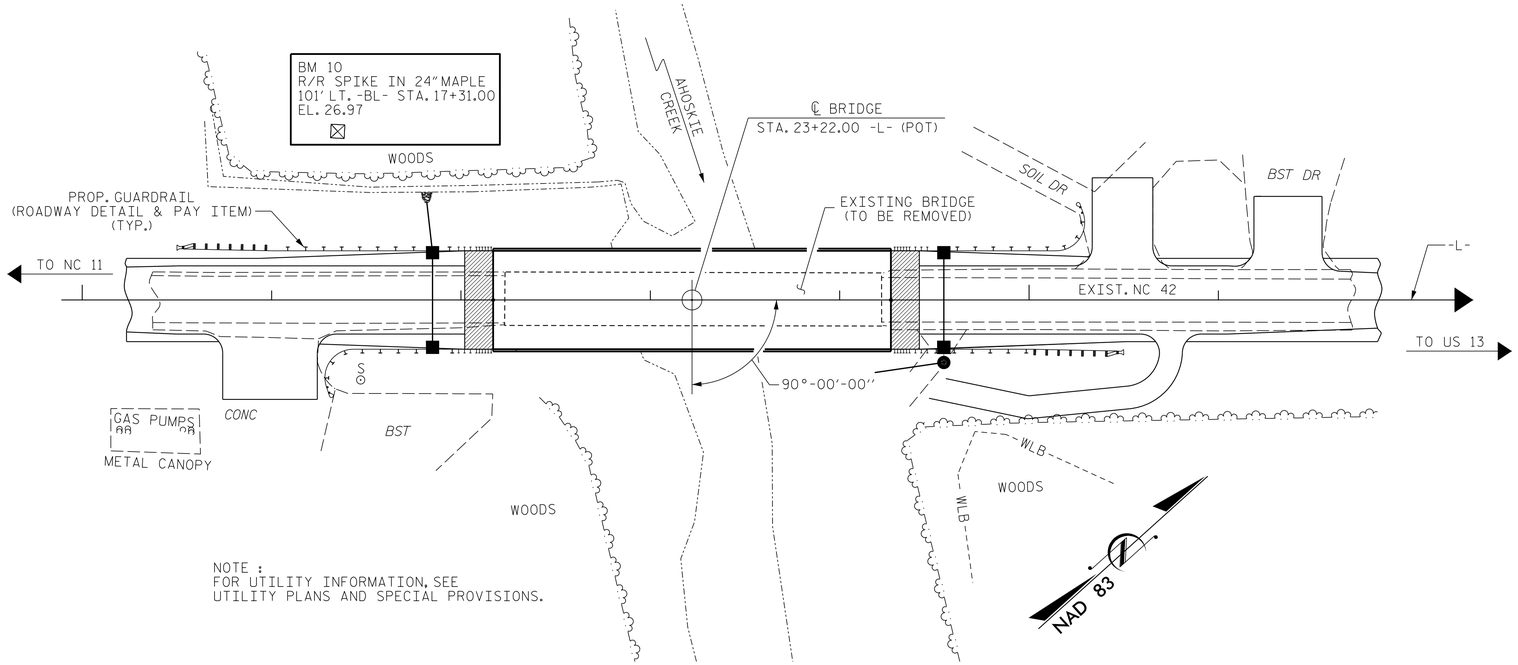

NOTE :
FOR UTILITY INFORMATION, SEE
UTILITY PLANS AND SPECIAL PROVISIONS.

LOCATION SKETCH

PROJECT NO. 17BP.1.R.58
HERTFORD COUNTY
STATION: 23+22.00 -L-

SHEET 3 OF 3

STATE OF NORTH CAROLINA
DEPARTMENT OF TRANSPORTATION
RALEIGH

GENERAL DRAWING

BRIDGE ON NC 42
OVER AHOSKIE CREEK
BETWEEN NC 11 & US 13

REVISIONS						SHEET NO.
NO.	BY:	DATE:	NO.	BY:	DATE:	S-3
1			3			TOTAL SHEETS
2			4			32

WETHERILL ENGINEERING
559 Jones Franklin Rd. Suite 164
Raleigh, N.C. 27606
Bus: 919 851 8077
Fax: 919 851 8107
License: F-0377
TRANSPORTATION PLANNING/DESIGN - BRIDGE/STRUCTURE DESIGN
CIVIL/SITE DESIGN - GIS/GPS - CONSTRUCTION OBSERVATION

NORTH CAROLINA PROFESSIONAL SEAL 19400 ENGINEER GREGORY M. GILLAND

DRAWN BY : J.M. BRITT DATE : 6-4-14
CHECKED BY: G.M. GILLAND DATE : 6-9-14
DESIGN ENGINEER OF RECORD: G.M. GILLAND DATE : 6-9-14

P:\2013\13131.01 Hertford #33\Structures\DWG\Hertford_33_sd_GD_WEI.dgn
7/1/2014 11:06:14 AM

DocuSign Envelope ID: 9470C23F-75AA-488A-BF2C-36FEFAA85328

LOAD AND RESISTANCE FACTOR RATING (LRFR) SUMMARY FOR PRESTRESSED CONCRETE GIRDERS

LEVEL		VEHICLE	WEIGHT (W) (TONS)	CONTROLLING LOAD RATING (#)	MINIMUM RATING FACTORS (RF)	TONS = W × RF	STRENGTH I LIMIT STATE											SERVICE III LIMIT STATE						COMMENT NUMBER
								MOMENT					SHEAR						MOMENT					
							LIVE-LOAD FACTORS γ_{LL}	DISTRIBUTION FACTORS (DF)	RATING FACTOR	SPAN	GIRDER LOCATION	DISTANCE FROM LEFT END OF SPAN (ft)	DISTRIBUTION FACTORS (DF)	RATING FACTOR	SPAN	GIRDER LOCATION	DISTANCE FROM LEFT END OF SPAN (ft)	LIVE-LOAD FACTORS γ_{LL}	DISTRIBUTION FACTORS (DF)	RATING FACTOR	SPAN	GIRDER LOCATION	DISTANCE FROM LEFT END OF SPAN (ft)	
DESIGN LOAD RATING		HL-93 (INVENTORY)	N/A	1	1.03	--	1.75	0.900	1.530	B	I	33.750	1.090	1.340	B	I	26.870	0.80	0.900	1.030	B	I	33.750	
		HL-93 (OPERATING)	N/A		1.98	--	1.35	0.900	1.980	B	I	33.750	1.090	2.150	B	I	13.100	N/A	--	--	--	--	--	
		HS-20 (INVENTORY)	36.000	2	1.33	47.880	1.75	0.900	1.970	B	I	33.750	1.090	1.900	B	I	26.870	0.80	0.900	1.330	B	I	33.750	
		HS-20 (OPERATING)	36.000		2.56	92.160	1.35	0.900	2.560	B	I	33.750	1.090	2.650	B	I	13.100	N/A	--	--	--	--	--	
LEGAL LOAD RATING	SINGLE VEHICLE (SV)	SNSH	13.500		2.95	39.825	1.40	0.900	5.480	B	I	33.750	1.090	6.060	B	I	13.100	0.80	0.900	2.950	B	I	33.750	
		SNGARBS2	20.000		2.22	44.400	1.40	0.900	4.120	B	I	33.750	1.090	4.330	B	I	13.100	0.80	0.900	2.220	B	I	33.750	
		SNAGRIS2	22.000		2.11	46.420	1.40	0.900	3.920	B	I	33.750	1.090	4.030	B	I	13.100	0.80	0.900	2.110	B	I	33.750	
		SNCOTTS3	27.250		1.47	40.058	1.40	0.900	2.730	B	I	33.750	1.090	2.970	B	I	13.100	0.80	0.900	1.470	B	I	33.750	
		SNAGGRS4	34.925		1.24	43.307	1.40	0.900	2.290	B	I	33.750	1.090	2.480	B	I	13.100	0.80	0.900	1.240	B	I	33.750	
		SNS5A	35.550		1.21	43.016	1.40	0.900	2.240	B	I	33.750	1.090	2.540	B	I	13.100	0.80	0.900	1.210	B	I	33.750	
		SNS6A	39.950		1.11	44.345	1.40	0.900	2.060	B	I	33.750	1.090	2.320	B	I	13.100	0.80	0.900	1.110	B	I	33.750	
		SNS7B	42.000		1.06	44.520	1.40	0.900	1.970	B	I	33.750	1.090	2.300	B	I	13.100	0.80	0.900	1.060	B	I	33.750	
	TRUCK TRACTOR SEMI-TRAILER (TTST)	TNAGRIT3	33.000		1.36	44.880	1.40	0.900	2.520	B	I	33.750	1.090	2.770	B	I	13.100	0.80	0.900	1.360	B	I	33.750	
		TNT4A	33.075		1.36	44.982	1.40	0.900	2.530	B	I	33.750	1.090	2.680	B	I	13.100	0.80	0.900	1.360	B	I	33.750	
		TNT6A	41.600		1.12	46.592	1.40	0.900	2.070	B	I	33.750	1.090	2.490	B	I	13.100	0.80	0.900	1.120	B	I	33.750	
		TNT7A	42.000		1.13	47.460	1.40	0.900	2.090	B	I	33.750	1.090	2.380	B	I	13.100	0.80	0.900	1.130	B	I	33.750	
		TNT7B	42.000		1.17	49.140	1.40	0.900	2.170	B	I	33.750	1.090	2.210	B	I	13.100	0.80	0.900	1.170	B	I	33.750	
		TNAGRIT4	43.000		1.11	47.730	1.40	0.900	2.060	B	I	33.750	1.090	2.140	B	I	13.100	0.80	0.900	1.110	B	I	33.750	
		TNAGT5A	45.000		1.04	46.800	1.40	0.900	1.940	B	I	33.750	1.090	2.150	B	I	13.100	0.80	0.900	1.040	B	I	33.750	
		TNAGT5B	45.000	3	1.03	46.350	1.40	0.900	1.910	B	I	33.750	1.090	1.950	B	I	26.870	0.80	0.900	1.030	B	I	33.750	

LOAD FACTORS:

	LIMIT STATE	γ_{DC}	γ_{DW}
DESIGN LOAD RATING FACTORS	STRENGTH I	1.25	1.50
	SERVICE III	1.00	1.00

NOTES:

MINIMUM RATING FACTORS ARE BASED ON THE STRENGTH I AND SERVICE III LIMIT STATES.

ALLOWABLE STRESSES FOR SERVICE III LIMIT STATE ARE AS REQUIRED FOR DESIGN.

COMMENTS:

1.
2.
3.
4.

(#) CONTROLLING LOAD RATING

(1) DESIGN LOAD RATING (HL-93)

(2) DESIGN LOAD RATING (HS-20)

(3) LEGAL LOAD RATING **

** SEE CHART FOR VEHICLE TYPE

GIRDER LOCATION

I - INTERIOR GIRDER
EL - EXTERIOR LEFT GIRDER
ER - EXTERIOR RIGHT GIRDER

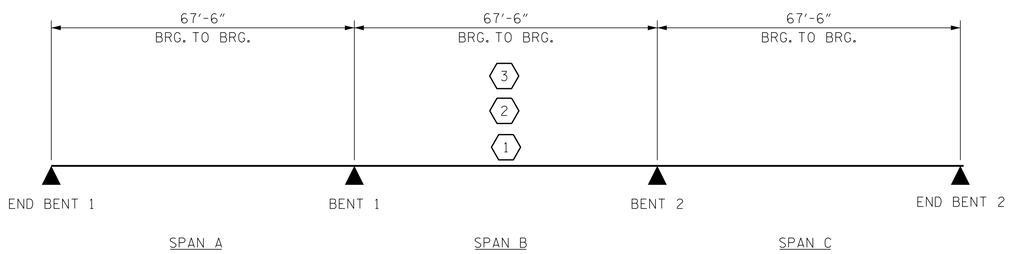

LRFR SUMMARY

PROJECT NO. 17BP.1.R.58
HERTFORD COUNTY
STATION: 23+22.00 -L-

STATE OF NORTH CAROLINA
DEPARTMENT OF TRANSPORTATION
RALEIGH

STANDARD

LRFR SUMMARY FOR PRESTRESSED CONCRETE GIRDERS
(NON-INTERSTATE TRAFFIC)

REVISIONS						SHEET NO.
NO.	BY:	DATE:	NO.	BY:	DATE:	S-4
1			3			TOTAL SHEETS
2			4			32

WETHERILL ENGINEERING
559 Jones Franklin Rd. Suite 164
Raleigh, N.C. 27606
Bus: 919 851 8077
Fax: 919 851 8107
License: F-0377
TRANSPORTATION PLANNING/DESIGN - BRIDGE/STRUCTURE DESIGN
CIVIL/SITE DESIGN - GIS/GPS - CONSTRUCTION OBSERVATION

NORTH CAROLINA PROFESSIONAL SEAL 32400 ENGINEER GREGORY M. GILLAND

ASSEMBLED BY : G. M. GILLAND	DATE : 4-30-14		
CHECKED BY : B.C. HUNT	DATE : 6-3-14		
DRAWN BY : MAA 1/08	REV. 11/12/08RR	MAA/GM	
CHECKED BY : GM/DI 2/08	REV. 10/1/11	MAA/GM	

STD. NO. LRFR1

P:\2013\13131.01 Hertford #33\Structures\DWG\Hertford_33_sd_LRFR_WEI.dgn
7/1/2014 11:29:32 AM

DocuSign Envelope ID: 9470C23F-75AA-488A-BF2C-36FEFAA85328

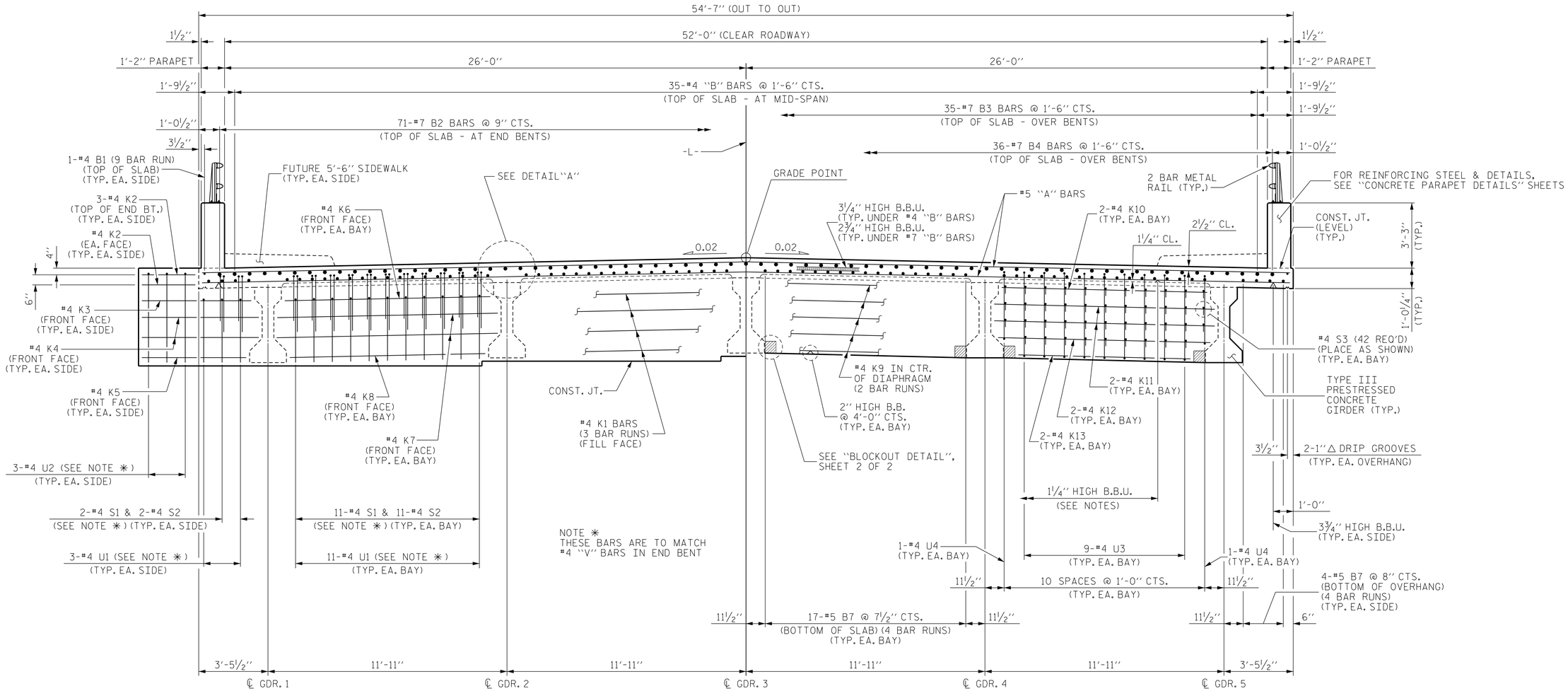

HALF SECTION - INTEGRAL END BENT DIAPHRAGM

HALF SECTION - BENT DIAPHRAGM

TYPICAL SECTION

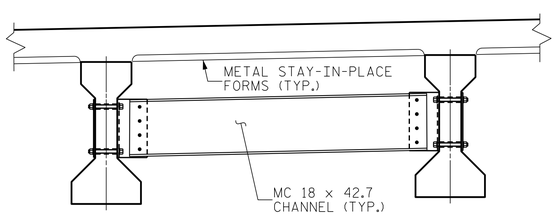

TYPICAL INTERMEDIATE DIAPHRAGM

SEE "INTERMEDIATE STEEL DIAPHRAGMS FOR
TYPE III PRESTRESSED CONCRETE GIRDERS"
SHEET FOR DETAILS

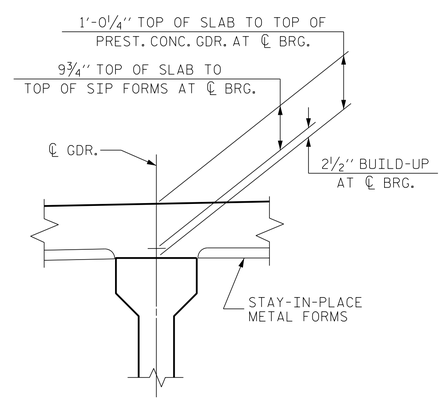

DETAIL "A"

NOTES :

PROVIDE 1¼" HIGH BEAM BOLSTERS UPPER AT 4'-0" CTS. ATOP THE METAL STAY-IN-PLACE FORMS TO SUPPORT THE BOTTOM MAT OF "A" BARS. WHEN USING REMOVABLE FORMS, PROVIDE CONTINUOUS HIGH CHAIRS FOR METAL DECK @ 4'-0" CTS. WITH A HEIGHT TO SUPPORT THE BOTTOM MAT OF "A" BARS A CLEAR DISTANCE OF 2½" ABOVE THE TOP OF THE REMOVABLE FORM.

LONGITUDINAL STEEL MAY BE SHIFTED SLIGHTLY, AS NECESSARY, TO AVOID INTERFERENCE WITH STIRRUPS IN PRESTRESSED CONCRETE GIRDERS.

ALL REINFORCING STEEL IN PARAPETS SHALL BE EPOXY COATED.

PREVIOUSLY CAST CONCRETE IN A CONTINUOUS UNIT SHALL HAVE ATTAINED A MINIMUM COMPRESSIVE STRENGTH OF 3,000 PSI BEFORE ADDITIONAL CONCRETE IS CAST IN THE UNIT.

THE PARAPET IN A CONTINUOUS UNIT SHALL NOT BE CAST UNTIL ALL SLAB CONCRETE IN THAT UNIT HAS BEEN CAST AND HAS REACHED A MINIMUM COMPRESSIVE STRENGTH OF 3,000 PSI.

PROJECT NO. 17BP.1.R.58
HERTFORD COUNTY
STATION: 23+22.00 -L-

SHEET 1 OF 2

STATE OF NORTH CAROLINA
DEPARTMENT OF TRANSPORTATION
RALEIGH

SUPERSTRUCTURE

TYPICAL SECTION

NORTH CAROLINA PROFESSIONAL SEAL 037400 ENGINEER GREGORY M. GILLAND
Digitally signed by

WETHERILL ENGINEERING
559 Jones Franklin Rd. Suite 164
Raleigh, N.C. 27606
Bus: 919 851 8077
Fax: 919 851 8107
License: F-0377

TRANSPORTATION PLANNING/DESIGN - BRIDGE/STRUCTURE DESIGN
CIVIL/SITE DESIGN - GIS/GPS - CONSTRUCTION OBSERVATION

REVISIONS						SHEET NO.
NO.	BY:	DATE:	NO.	BY:	DATE:	S-5
1			3			TOTAL SHEETS
2			4			32

DRAWN BY : J.M. BRITT DATE : 4-17-14
CHECKED BY: G.M. GILLAND DATE : 5-1-14
DESIGN ENGINEER OF RECORD: G.M. GILLAND DATE : 5-1-14

P:\2013\13131.01 Hertford #33\Structures\DWG\Hertford_33_sd_TS_WE.dgn
7/1/2014 11:30:25 AM

DocuSign Envelope ID: 9470C23F-75AA-488A-BF2C-36FEFAA85328

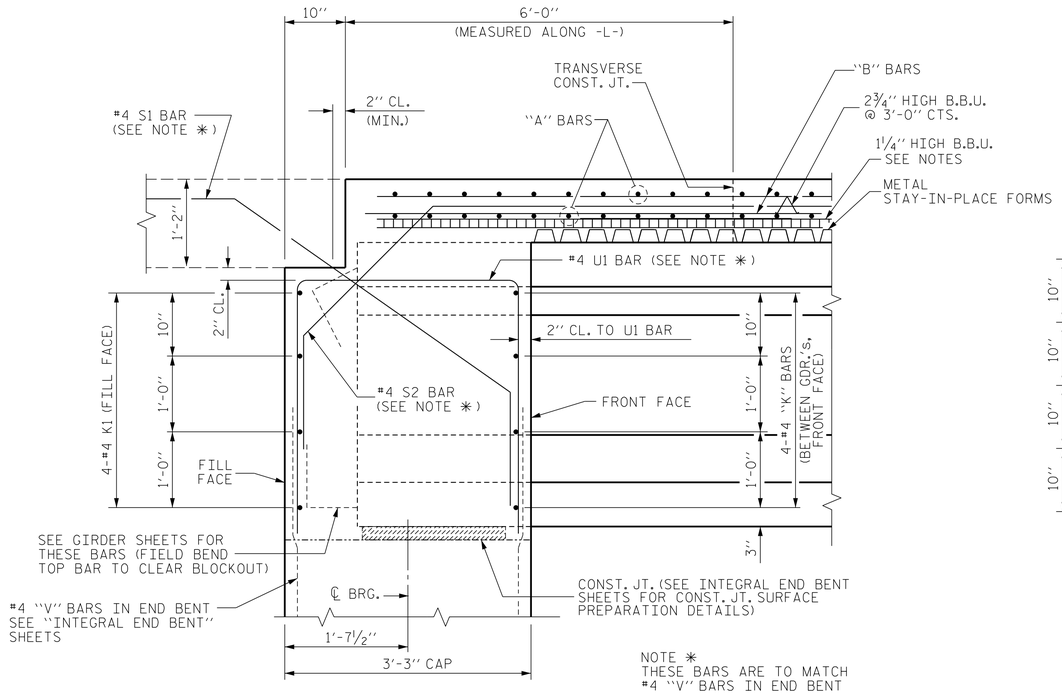

SECTION THRU INTEGRAL END BENT

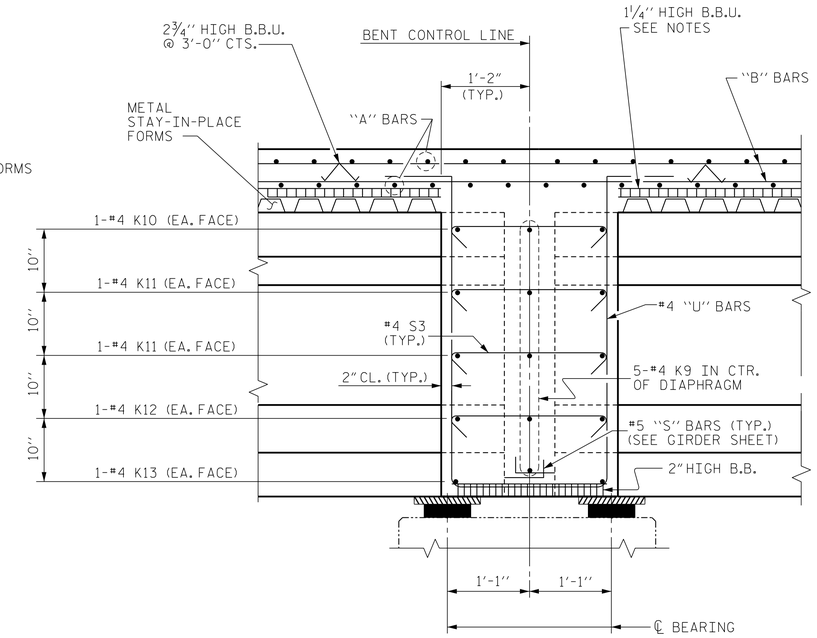

SECTION THRU BENT DIAPHRAGM

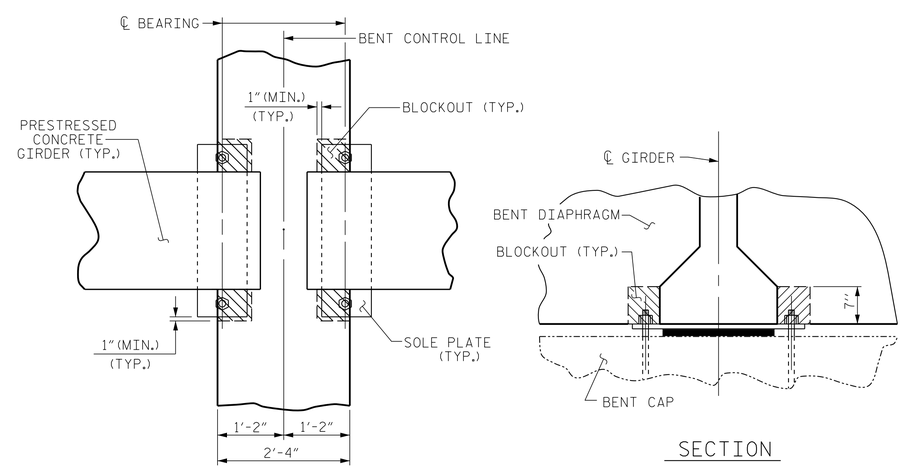

PLAN

SECTION

BENT DIAPHRAGM BLOCK-OUT DETAIL

PROJECT NO. 17BP.1.R.58

HERTFORD COUNTY

STATION: 23+22.00 -L-

SHEET 2 OF 2

STATE OF NORTH CAROLINA
DEPARTMENT OF TRANSPORTATION
RALEIGH

SUPERSTRUCTURE

TYPICAL SECTION

NORTH CAROLINA PROFESSIONAL SEAL 037400 ENGINEER GREGORY M. GILLAND

WETHERILL ENGINEERING
559 Jones Franklin Rd. Suite 164
Raleigh, N.C. 27606
Bus: 919 851 8077
Fax: 919 851 8107
License: F-0377
TRANSPORTATION PLANNING/DESIGN - BRIDGE/STRUCTURE DESIGN
CIVIL/SITE DESIGN - GIS/GPS - CONSTRUCTION OBSERVATION

REVISIONS						SHEET NO.
NO.	BY:	DATE:	NO.	BY:	DATE:	S-6
1			3			TOTAL SHEETS
2			4			32

DRAWN BY : J.M. BRITT DATE : 4-17-14
CHECKED BY: G.M. GILLAND DATE : 5-1-14
DESIGN ENGINEER OF RECORD: G.M. GILLAND DATE : 5-1-14

P:\2013\13131.01 Hertford #33\Structures\DWG\Hertford_33_sd_TS_WE1.dgn
7/1/2014 11:30:57 AM

DocuSign Envelope ID: 9470C23F-75AA-488A-BF2C-36FEFAA85328

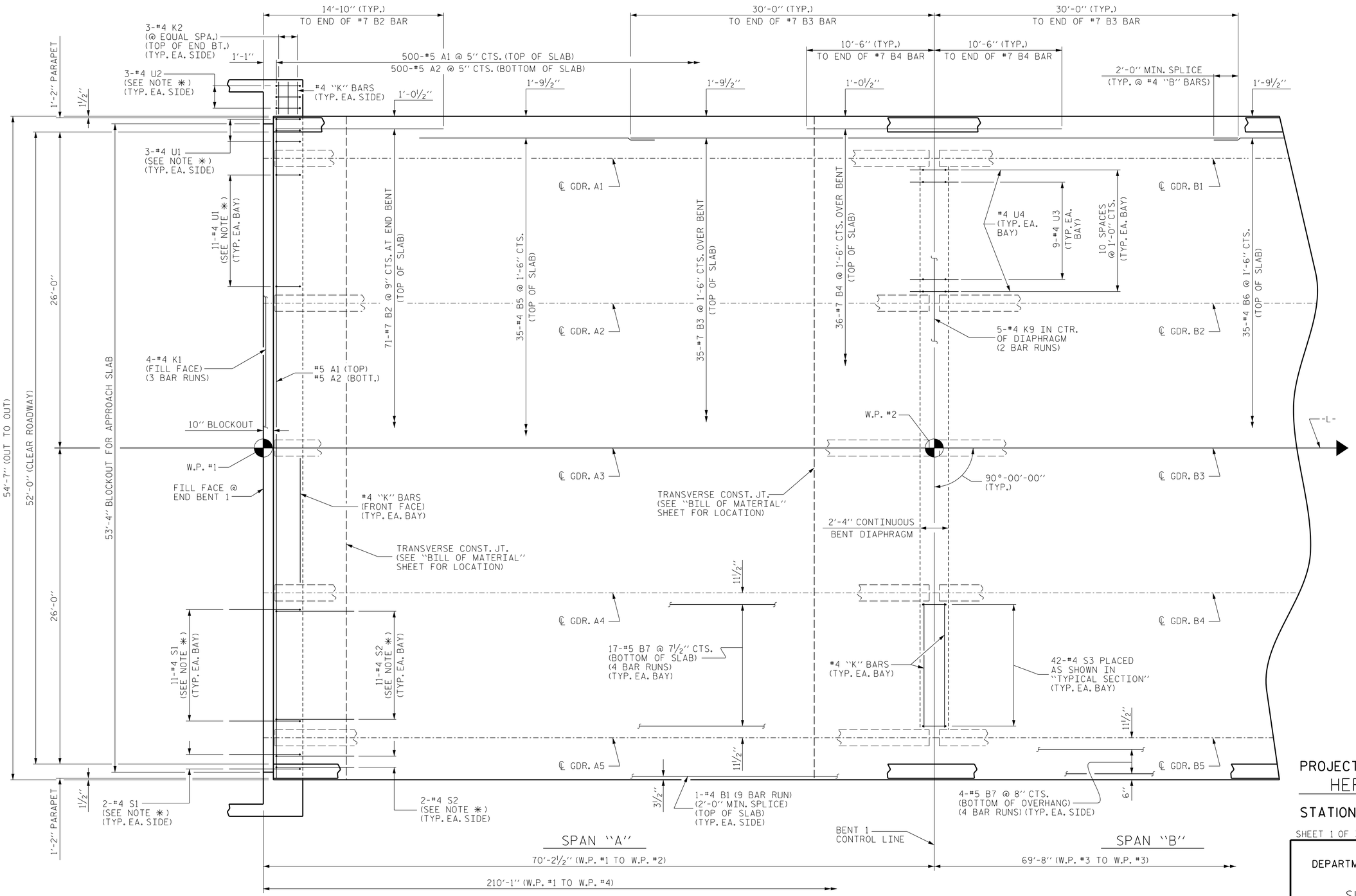

PARTIAL PLAN OF SPAN

NOTES :

FOR PARAPET REINFORCING STEEL AND DETAILS, SEE "CONCRETE PARAPET DETAILS" SHEETS.

✱ THESE BARS ARE TO MATCH SPACING OF THE #4 "V" BARS IN END BENT.

FOR "CONCRETE QUANTITY DETAIL", SEE SHEET 3 OF 3.

PROJECT NO. 17BP.1.R.58
HERTFORD COUNTY
STATION: 23+22.00 -L-

SHEET 1 OF 3

STATE OF NORTH CAROLINA
DEPARTMENT OF TRANSPORTATION
RALEIGH

SUPERSTRUCTURE
PLAN OF SPAN

NORTH CAROLINA PROFESSIONAL SEAL 040400 ENGINEER GREGORY M. GILLAND

WETHERILL ENGINEERING
559 Jones Franklin Rd. Suite 164
Raleigh, N.C. 27606
Bus: 919 851 8077
Fax: 919 851 8107
License: F-0377
TRANSPORTATION PLANNING/DESIGN - BRIDGE/STRUCTURE DESIGN
CIVIL/SITE DESIGN - GIS/GPS - CONSTRUCTION OBSERVATION

REVISIONS						SHEET NO.
NO.	BY:	DATE:	NO.	BY:	DATE:	S-7
1			3			TOTAL SHEETS
2			4			32

DRAWN BY : J.M. BRITT DATE : 4-22-14
CHECKED BY: G.M. GILLAND DATE : 5-5-14
DESIGN ENGINEER OF RECORD: G.M. GILLAND DATE : 5-5-14

P:\2013\131301 Hertford #33\Structures\DN\Hertford_33_sd_PS_WE1.dgn
7/1/2014 11:33:19 AM

DocuSign Envelope ID: 9470C23F-75AA-488A-BF2C-36FEFAA85328

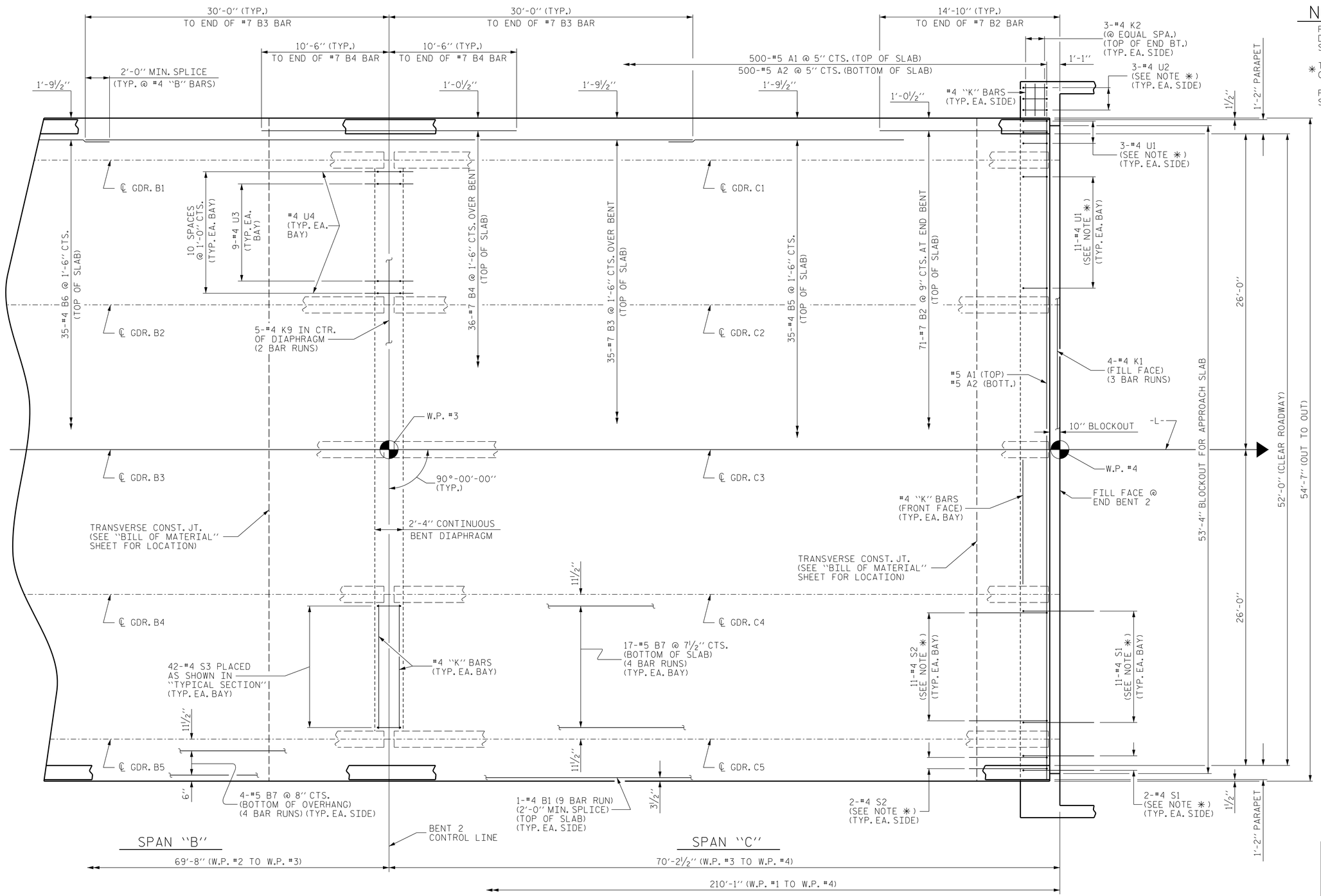

PARTIAL PLAN OF SPAN

NOTES :

FOR PARAPET REINFORCING STEEL AND DETAILS, SEE "CONCRETE PARAPET DETAILS" SHEETS.

✱ THESE BARS ARE TO MATCH SPACING OF THE #4 "V" BARS IN END BENT.

FOR "CONCRETE QUANTITY DETAIL", SEE SHEET 3 OF 3.

PROJECT NO. 17BP.1.R.58

HERTFORD COUNTY

STATION: 23+22.00 -L-

SHEET 2 OF 3

STATE OF NORTH CAROLINA
DEPARTMENT OF TRANSPORTATION
RALEIGH

SUPERSTRUCTURE

PLAN OF SPAN

NORTH CAROLINA PROFESSIONAL SEAL 030400 ENGINEER GREGORY M. GILLAND

WETHERILL ENGINEERING
559 Jones Franklin Rd. Suite 164
Raleigh, N.C. 27606
Bus: 919 851 8077
Fax: 919 851 8107
License: F-0377

TRANSPORTATION PLANNING/DESIGN - BRIDGE/STRUCTURE DESIGN
CIVIL/SITE DESIGN - GIS/GPS - CONSTRUCTION OBSERVATION

REVISIONS						SHEET NO.
NO.	BY:	DATE:	NO.	BY:	DATE:	S-8
1			3			TOTAL SHEETS
2			4			32

DRAWN BY : J.M. BRITT DATE : 4-22-14
CHECKED BY: G.M. GILLAND DATE : 5-5-14
DESIGN ENGINEER OF RECORD: G.M. GILLAND DATE : 5-5-14

P:\2013\1313.0.1 Hertford #33\Structures\DN\GVHertford_33_sd_PS_WE1.dgn
7/1/2014 11:33:58 AM

DocuSign Envelope ID: 9470C23F-75AA-488A-BF2C-36FEFAA85328

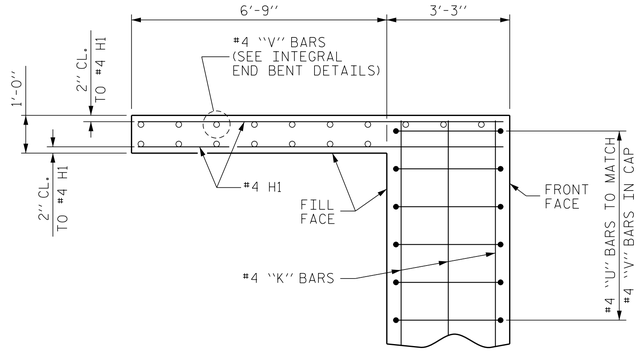

PLAN OF LEFT WING
(WING @ END BENT 1 SHOWN, WING @ END BENT 2 SIMILAR)

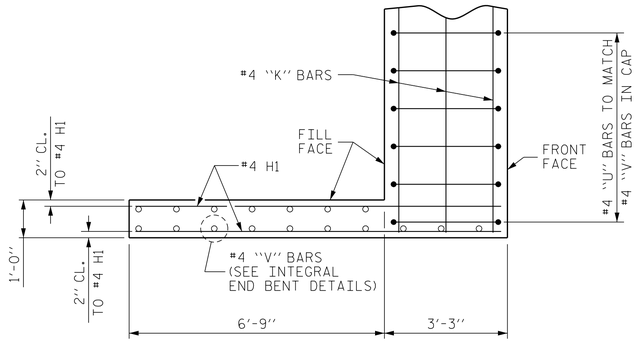

PLAN OF RIGHT WING
(WING @ END BENT 1 SHOWN, WING @ END BENT 2 SIMILAR)

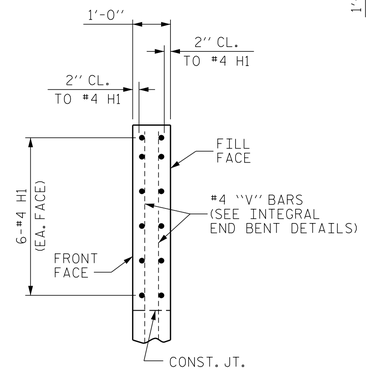

SECTION A-A

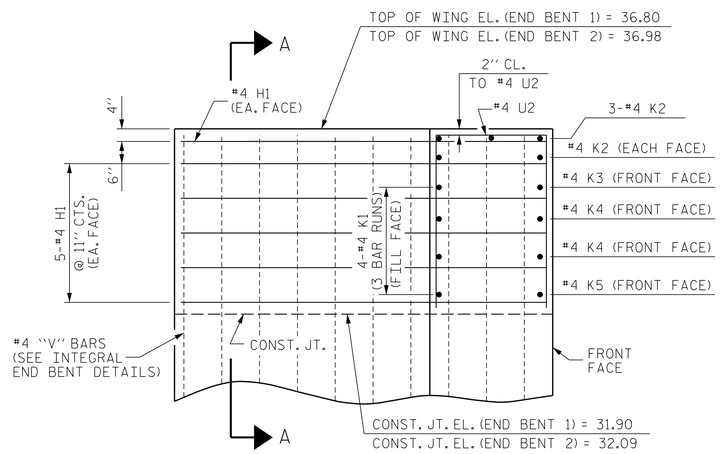

ELEVATION OF LEFT WING
(WING @ END BENT 1 SHOWN, WING @ END BENT 2 SIMILAR)

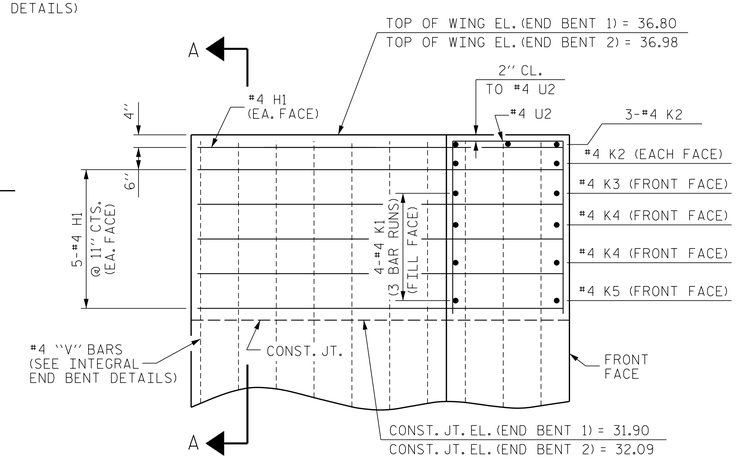

ELEVATION OF RIGHT WING
(WING @ END BENT 1 SHOWN, WING @ END BENT 2 SIMILAR)

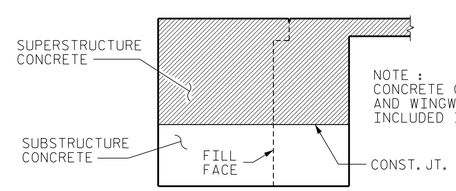

NOTE :
CONCRETE QUANTITIES OF INTEGRAL END BENT CAP AND WINGWALLS ABOVE CONSTRUCTION JOINT ARE INCLUDED IN SUPERSTRUCTURE QUANTITIES.

CONCRETE QUANTITY DETAIL
(TYPICAL EACH END BENT)

PROJECT NO. 17BP.1.R.58
HERTFORD COUNTY
STATION: 23+22.00 -L-

SHEET 3 OF 3

STATE OF NORTH CAROLINA
DEPARTMENT OF TRANSPORTATION
RALEIGH

SUPERSTRUCTURE
PLAN OF SPAN
DETAILS

REVISIONS							SHEET NO.
NO.	BY:	DATE:	NO.	BY:	DATE:		S-9
1			3				TOTAL SHEETS
2			4				32

NORTH CAROLINA PROFESSIONAL SEAL 030400 ENGINEER GREGORY M. GILLAND

WETHERILL ENGINEERING
559 Jones Franklin Rd. Suite 164
Raleigh, N.C. 27606
Bus: 919 851 8077
Fax: 919 851 8107
License: F-0377

TRANSPORTATION PLANNING/DESIGN - BRIDGE/STRUCTURE DESIGN
CIVIL/SITE DESIGN - GIS/GPS - CONSTRUCTION OBSERVATION

DRAWN BY : J.M. BRITT DATE : 4-23-14
CHECKED BY: G.M. GILLAND DATE : 5-5-14
DESIGN ENGINEER OF RECORD: G.M. GILLAND DATE : 5-5-14

P:\2013\131101 Hertford #33\Structures\DWG\Hertford_33_sd_PS_WE1.dgn
7/1/2014 11:34:40 AM

DocuSign Envelope ID: 9470C23F-75AA-488A-BF2C-36FEFAA85328

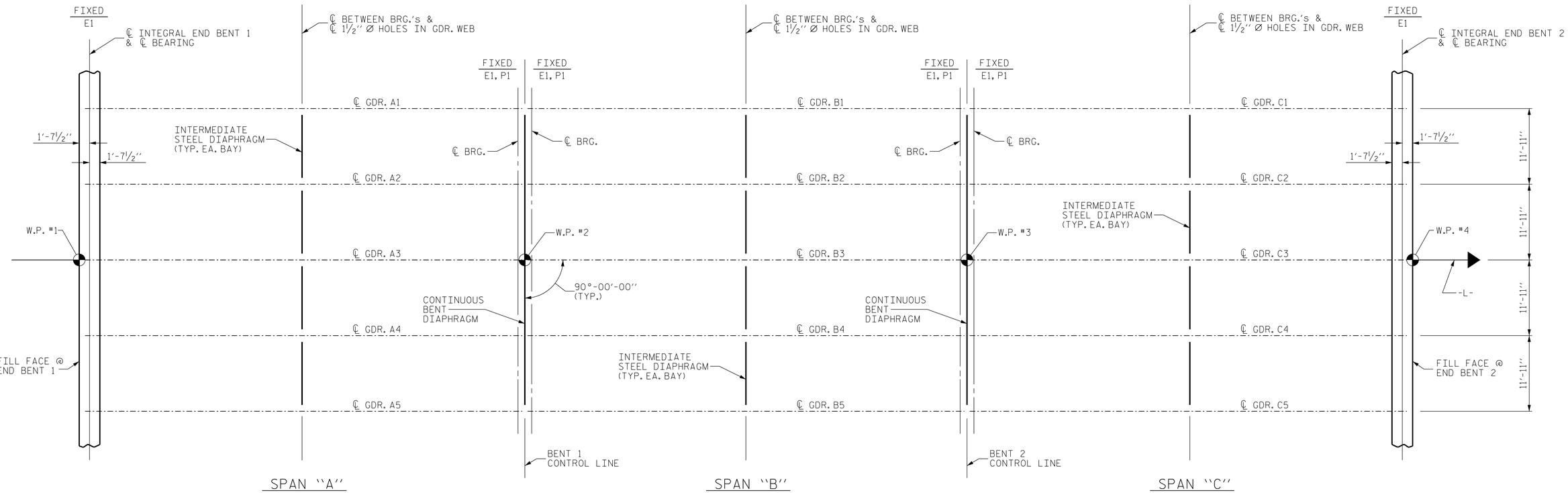

GIRDER LAYOUT

PROJECT NO. 17BP.1.R.58
HERTFORD COUNTY
STATION: 23+22.00 -L-

STATE OF NORTH CAROLINA
DEPARTMENT OF TRANSPORTATION
RALEIGH

SUPERSTRUCTURE

GIRDER LAYOUT

NORTH CAROLINA PROFESSIONAL SEAL 037400 ENGINEER GREGORY M. GILLAND

WETHERILL ENGINEERING
559 Jones Franklin Rd. Suite 164
Raleigh, N.C. 27606
Bus: 919 851 8077
Fax: 919 851 8107
License: F-0377
TRANSPORTATION PLANNING/DESIGN - BRIDGE/STRUCTURE DESIGN
CIVIL/SITE DESIGN - GIS/GPS - CONSTRUCTION OBSERVATION

REVISIONS						
NO.	BY:	DATE:	NO.	BY:	DATE:	
1			3			
2			4			

SHEET NO. S-10
TOTAL SHEETS 32

DRAWN BY : J.M. BRITT DATE : 4-23-14
CHECKED BY: G.M. GILLAND DATE : 5-6-14
DESIGN ENGINEER OF RECORD: G.M. GILLAND DATE : 5-6-14

P:\2013\1313101 Hertford #33\Structures\DWG\Hertford_33_sd_FP_WEI.dgn
7/1/2014 1:20:13 PM

DocuSign Envelope ID: 9470C23F-75AA-488A-BF2C-36FEFAA85328

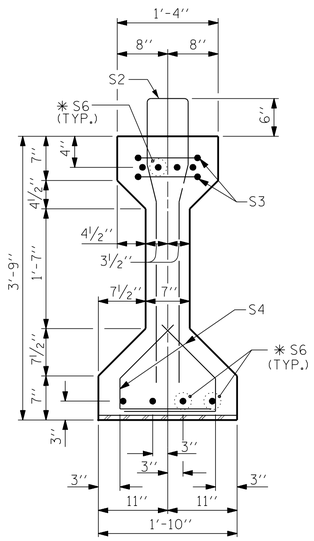

SECTION A-A

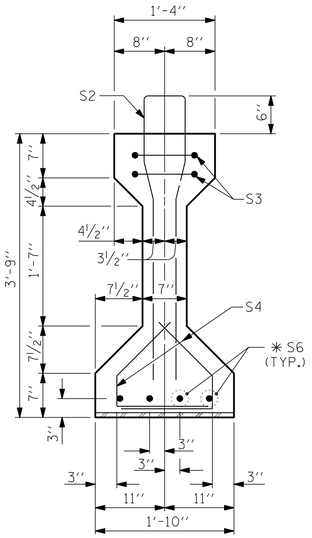

SECTION B-B

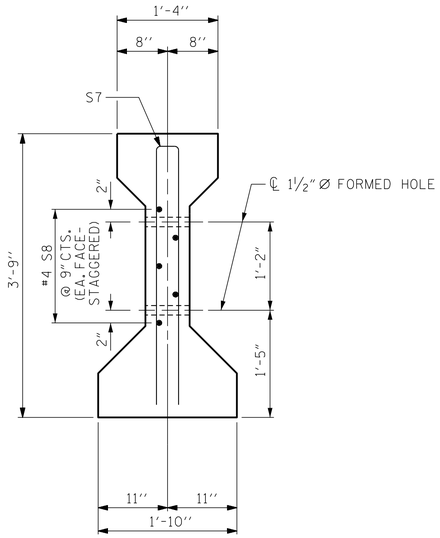

SECTION C-C

(S1 BARS NOT SHOWN)

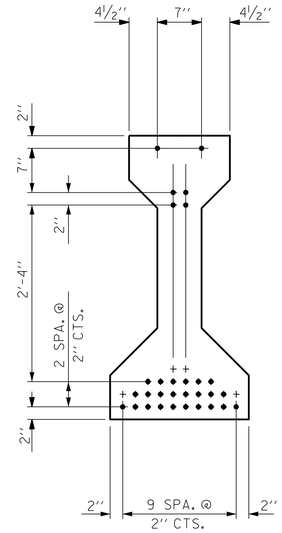

AT END OF GIRDER

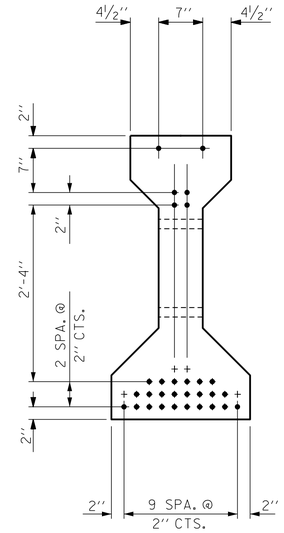

AT ℄ OF GIRDER

0.6'' Ø LOW RELAXATION STRAND LAYOUT

0.6'' Ø L. R. GRADE 270 STRANDS		
AREA (SQUARE INCHES)	ULTIMATE STRENGTH (LBS. PER STRAND)	APPLIED PRESTRESS (LBS. PER STRAND)
0.217	58,600	43,950

REINFORCING STEEL FOR ONE GIRDER

BAR	NUMBER	SIZE	TYPE	LENGTH	WEIGHT
S1	80	#4	1	8'-6''	454
S2	16	#6	1	8'-6''	204
S3	4	#4	3	8'-8''	23
S4	92	#4	2	2'-9''	169
✱ S6	12	#5	STR	3'-8''	46
S7	2	#5	3	7'-2''	15
S8	5	#4	STR	7'-0''	23
S10	1	#3	STR	1'-0''	1

✱ NOTE: S6 BARS SHALL BE BENT BEFORE SHIPMENT. HEAT BENDING SHALL NOT BE ALLOWED.

BAR TYPES

ALL BAR DIMENSIONS ARE OUT-TO-OUT

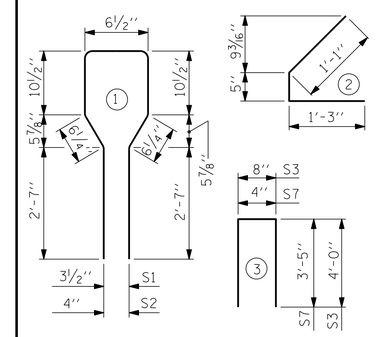

QUANTITIES FOR ONE GIRDER

SPAN "A" OR "C"	REINFORCING STEEL	8,500 PSI CONCRETE	0.6'' Ø L.R. STRANDS
	LBS.	C.Y.	No.
	935	9.9	30

GIRDERS REQUIRED

NUMBER	LENGTH	TOTAL LENGTH
SPAN "A" - 5	68'-10''	344.17'
SPAN "C" - 5	68'-10''	344.17'

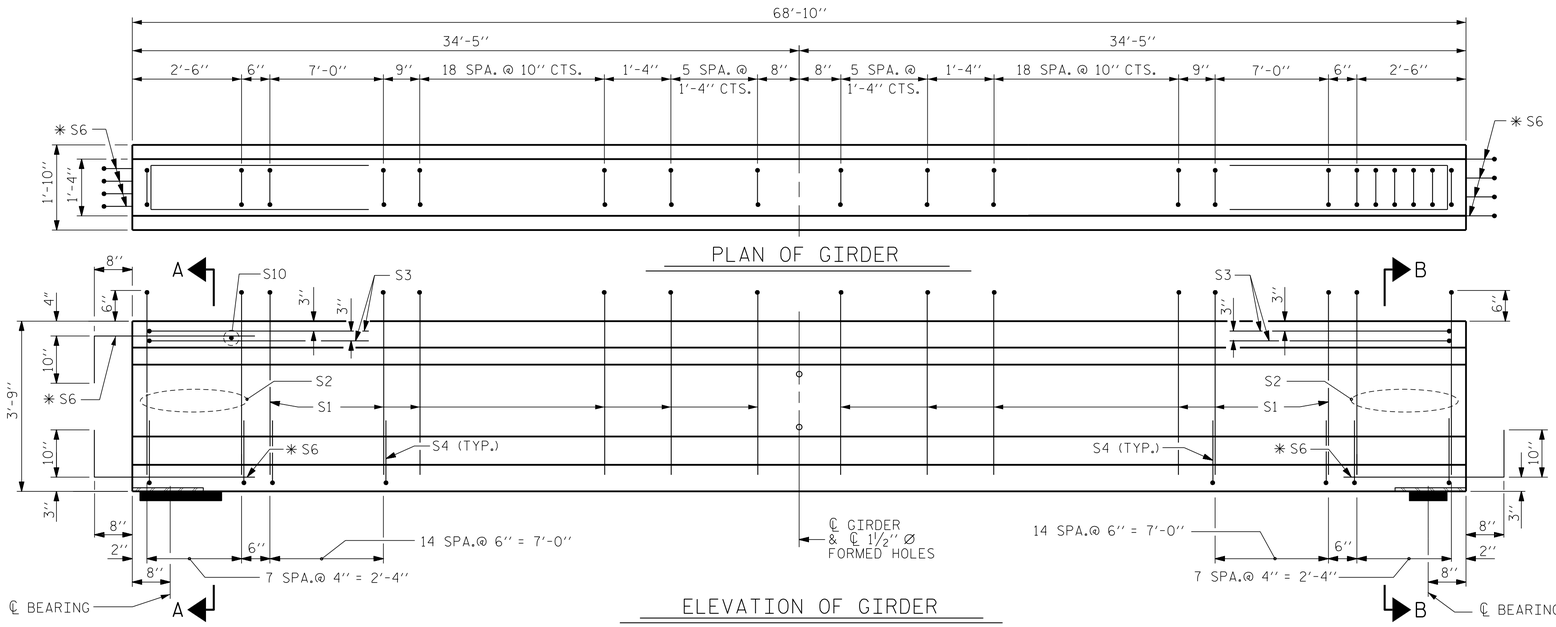

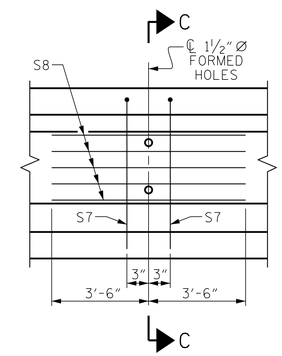

PARTIAL ELEVATION

SHOWING INTERMEDIATE DIAPHRAGM REINFORCING STEEL FOR GIRDERS

PROJECT NO. 17BP.1.R.58

HERTFORD COUNTY

STATION: 23+22.00 -L-

SHEET 1 OF 3

STATE OF NORTH CAROLINA
DEPARTMENT OF TRANSPORTATION
RALEIGH

SUPERSTRUCTURE

AASHTO TYPE III PRESTRESSED CONCRETE GIRDER CONTINUOUS FOR LIVE LOAD SPANS "A" & "C"

NORTH CAROLINA PROFESSIONAL SEAL 047400 ENGINEER GREGORY M. GILLAND

WETHERILL ENGINEERING
559 Jones Franklin Rd. Suite 164
Raleigh, N.C. 27606
Bus: 919 851 8077
Fax: 919 851 8107
License: F-0377

TRANSPORTATION PLANNING/DESIGN - BRIDGE/STRUCTURE DESIGN
CIVIL/SITE DESIGN - GIS/GPS - CONSTRUCTION OBSERVATION

REVISIONS						SHEET NO.
NO.	BY:	DATE:	NO.	BY:	DATE:	S-11
1			3			TOTAL SHEETS
2			4			32

DRAWN BY : J.M. BRITT DATE : 4-23-14
CHECKED BY: G.M. GILLAND DATE : 5-6-14
DESIGN ENGINEER OF RECORD: G.M. GILLAND DATE : 5-6-14

P:\2013\1313101 Hertford #33\Structures\DWG\Hertford_33_sd_PCG_WE1.dgn
7/1/2014 11:20:10 AM

DocuSign Envelope ID: 9470C23F-75AA-488A-BF2C-36FEFAA85328

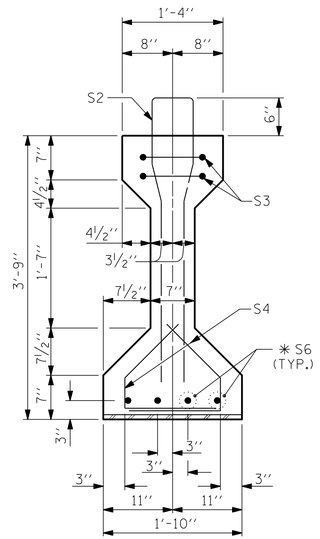

SECTION B-B

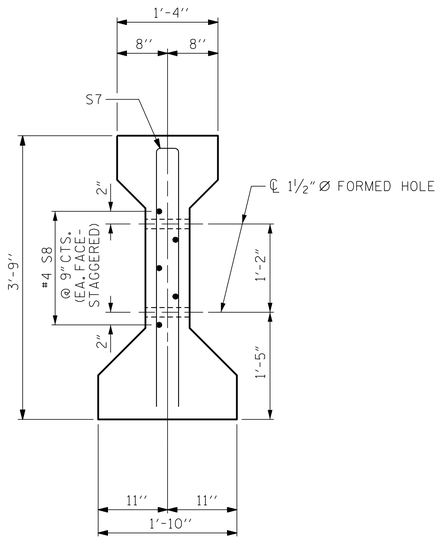

SECTION C-C

(S1 BARS NOT SHOWN)

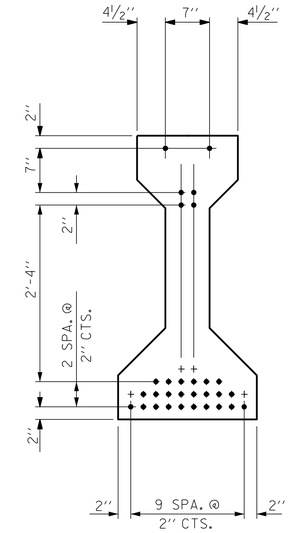

AT END OF GIRDER

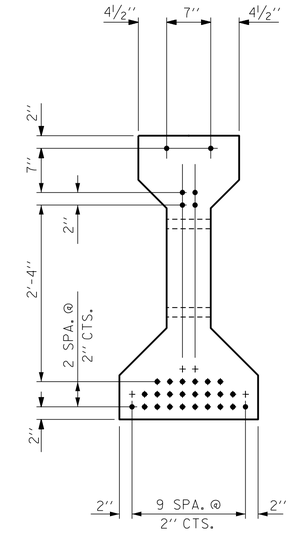

AT ℄ OF GIRDER

0.6'' Ø LOW RELAXATION STRAND LAYOUT

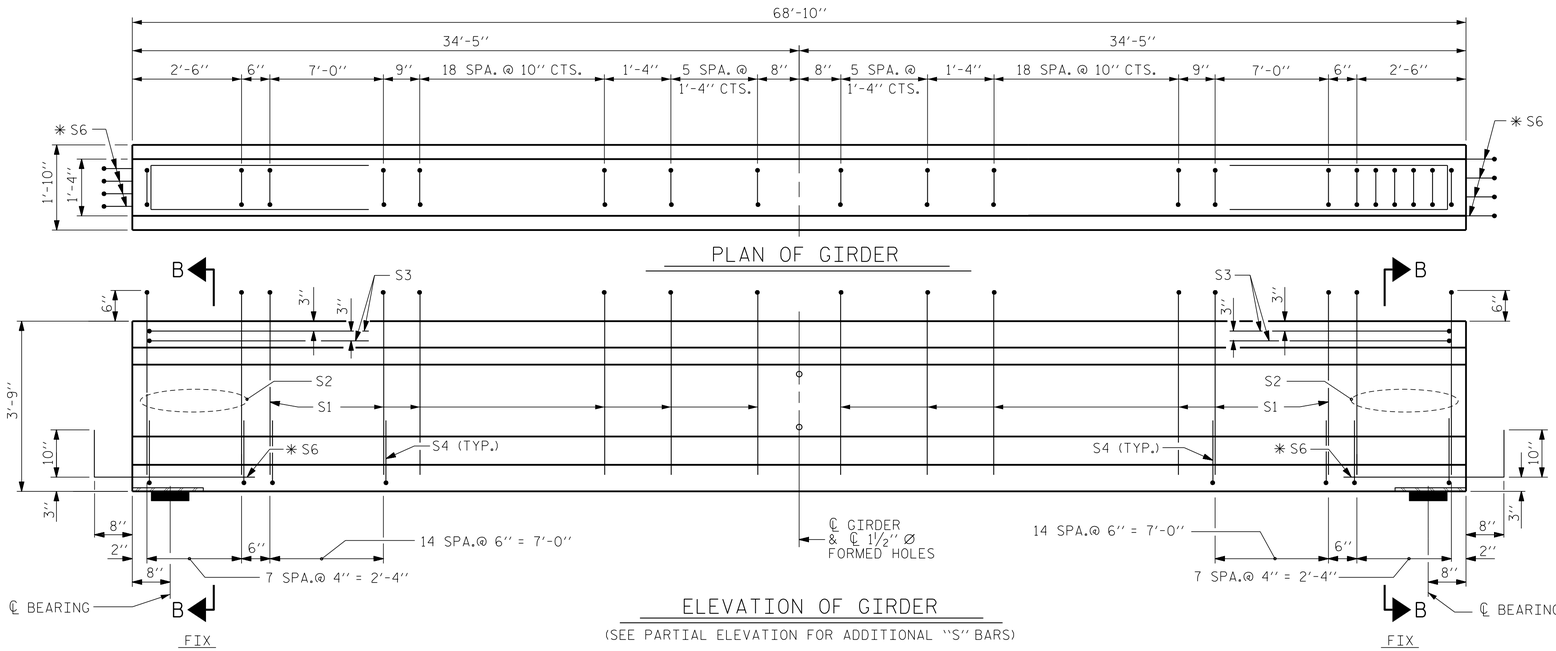

PLAN OF GIRDER

ELEVATION OF GIRDER

(SEE PARTIAL ELEVATION FOR ADDITIONAL "S" BARS)

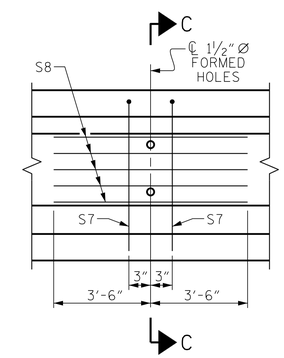

PARTIAL ELEVATION

SHOWING INTERMEDIATE DIAPHRAGM
REINFORCING STEEL FOR GIRDERS

0.6'' Ø L. R. GRADE 270 STRANDS

AREA (SQUARE INCHES)	ULTIMATE STRENGTH (LBS. PER STRAND)	APPLIED PRESTRESS (LBS. PER STRAND)
0.217	58,600	43,950

REINFORCING STEEL FOR ONE GIRDER

BAR	NUMBER	SIZE	TYPE	LENGTH	WEIGHT
S1	80	#4	1	8'-6''	454
S2	16	#6	1	8'-6''	204
S3	4	#4	3	8'-8''	23
S4	92	#4	2	2'-9''	169
✱ S6	8	#5	STR	3'-8''	31
S7	2	#5	3	7'-2''	15
S8	5	#4	STR	7'-0''	23

✱ NOTE: S6 BARS SHALL BE BENT BEFORE SHIPMENT. HEAT BENDING SHALL NOT BE ALLOWED.

BAR TYPES

ALL BAR DIMENSIONS ARE OUT-TO-OUT

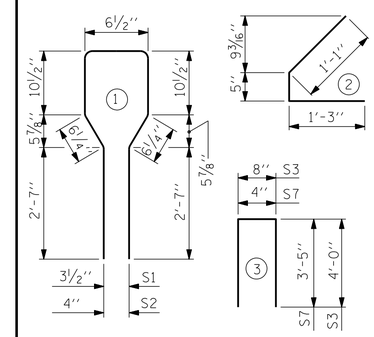

QUANTITIES FOR ONE GIRDER

	REINFORCING STEEL	8,500 PSI CONCRETE	0.6'' Ø L.R. STRANDS
SPAN "B"	LBS.	C.Y.	No.
	919	9.9	30

GIRDERS REQUIRED

NUMBER	LENGTH	TOTAL LENGTH
SPAN "B" - 5	68'-10''	344.17'

PROJECT NO. 17BP.1.R.58

HERTFORD COUNTY

STATION: 23+22.00 -L-

SHEET 2 OF 3

STATE OF NORTH CAROLINA
DEPARTMENT OF TRANSPORTATION
RALEIGH

SUPERSTRUCTURE

AASHTO TYPE III
PRESTRESSED CONCRETE GIRDER
CONTINUOUS FOR LIVE LOAD
SPAN "B"

NORTH CAROLINA PROFESSIONAL SEAL 027400 ENGINEER GREGORY M. GILLAND

WETHERILL ENGINEERING
559 Jones Franklin Rd. Suite 164
Raleigh, N.C. 27606
Bus: 919 851 8077
Fax: 919 851 8107
License: F-0377

TRANSPORTATION PLANNING/DESIGN - BRIDGE/STRUCTURE DESIGN
CIVIL/SITE DESIGN - GIS/GPS - CONSTRUCTION OBSERVATION

REVISIONS						
NO.	BY:	DATE:	NO.	BY:	DATE:	
1			3			
2			4			

SHEET NO. S-12

TOTAL SHEETS 32

DRAWN BY : J.M. BRITT DATE : 4-23-14
CHECKED BY: G.M. GILLAND DATE : 5-6-14
DESIGN ENGINEER OF RECORD: G.M. GILLAND DATE : 5-6-14

P:\2013\1313101 Hertford #33\Structures\DWG\Hertford_33_sd_PCG_WE1.dgn
7/1/2014 1:23:14 PM

DocuSign Envelope ID: 9470C23F-75AA-488A-BF2C-36FEFAA85328

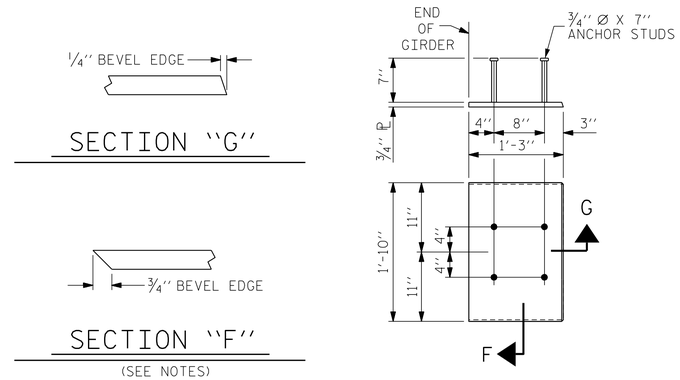

EMBEDDED PLATE ''B-1'' DETAILS FOR AASHTO TYPE III GIRDER

(2 REQ'D PER GIRDER)

NOTES

ALL PRESTRESSING STRANDS SHALL BE 7-WIRE LOW-RELAXATION GRADE 270 STRANDS AND SHALL CONFORM TO AASHTO M203 EXCEPT FOR SAMPLING REQUIREMENTS WHICH SHALL BE IN ACCORDANCE WITH THE STANDARD SPECIFICATIONS.

ALL REINFORCING STEEL SHALL BE GRADE 60.

EMBEDDED PLATE ''B-1'' SHALL BE GALVANIZED IN ACCORDANCE WITH THE STANDARD SPECIFICATIONS. BEVEL EDGES OF PLATE ''B-1'' TO GIVE CLOSE FIT BUT NOT TIGHT FIT TO STEEL CASTING FORM.

ANCHOR STUDS SHALL CONFORM TO AASHTO M169 GRADES 1010 THROUGH 1020 OR APPROVED EQUAL, AND SHALL MEET THE TYPE "B" REQUIREMENTS OF SUBSECTION 7.3 OF THE ANSI/AASHTO/AWS D1.5 BRIDGE WELDING CODE.

AT ENDS OF GIRDERS TO BE EMBEDDED IN CONCRETE DIAPHRAGMS OR END WALLS, PRESTRESSING STRANDS MAY EXTEND A MAXIMUM OF 2'' BEYOND THE GIRDER ENDS. OTHERWISE, PRESTRESSING STRANDS SHALL BE CUT FLUSH WITH THE GIRDER ENDS.

FOR ALL GIRDERS, THE TRANSFER OF LOAD FROM THE ANCHORAGES TO THE GIRDER SHALL BE DONE WHEN CONCRETE HAS REACHED A COMPRESSIVE STRENGTH OF NOT LESS THAN 6,700 PSI.

DEPENDING ON THE TYPE OF SYSTEM USED TO SUPPORT THE DECK SLAB FORMS, PRESET ANCHORS MAY BE NECESSARY IN THE PRESTRESSED CONCRETE GIRDER.

THE TOP SURFACE OF THE GIRDER, EXCLUDING THE OUTSIDE 4'', SHALL BE RAKED TO A DEPTH OF 1/4''.

DEAD LOAD DEFLECTION TABLE FOR GIRDERS

	SPANS ''A'', ''B'' & ''C''																					
	GIRDERS 1 & 5											GIRDERS 2 THRU 4										
TENTH POINTS	0	.1	.2	.3	.4	.5	.6	.7	.8	.9	0	0	.1	.2	.3	.4	.5	.6	.7	.8	.9	0
CAMBER (GIRDER ALONE IN PLACE) ↑	0	0.065	0.113	0.146	0.165	0.171	0.165	0.146	0.113	0.065	0	0	0.065	0.113	0.146	0.165	0.171	0.165	0.146	0.113	0.065	0
* DEFLECTION DUE TO SUPERIMPOSED D.L. ↓	0	0.027	0.054	0.075	0.089	0.094	0.089	0.075	0.054	0.027	0	0	0.033	0.065	0.091	0.107	0.113	0.107	0.091	0.065	0.033	0
FINAL CAMBER ↑	0	7/16''	11/16''	13/16''	15/16''	15/16''	15/16''	13/16''	11/16''	7/16''	0	0	3/8''	9/16''	5/8''	11/16''	11/16''	11/16''	5/8''	9/16''	3/8''	0

* INCLUDES FUTURE WEARING SURFACE AND FUTURE SIDEWALK
ALL VALUES ARE SHOWN IN FEET (DECIMAL FORM), EXCEPT "FINAL CAMBER", WHICH IS GIVEN IN INCHES (FRACTION FORM).

PROJECT NO. 17BP.1.R.58
HERTFORD COUNTY
STATION: 23+22.00 -L-

SHEET 3 OF 3

STATE OF NORTH CAROLINA
DEPARTMENT OF TRANSPORTATION
RALEIGH

SUPERSTRUCTURE
AASHTO TYPE III
PRESTRESSED CONCRETE GIRDER
CONTINUOUS FOR LIVE LOAD
DETAILS AND DEAD LOAD
DEFLECTION TABLES

REVISIONS						SHEET NO.
NO.	BY:	DATE:	NO.	BY:	DATE:	S-13
1			3			TOTAL SHEETS
2			4			32

NORTH CAROLINA PROFESSIONAL SEAL 030400 ENGINEER GREGORY M. GILLAND

WETHERILL ENGINEERING
559 Jones Franklin Rd. Suite 164
Raleigh, N.C. 27606
Bus: 919 851 8077
Fax: 919 851 8107
License: F-0377

TRANSPORTATION PLANNING/DESIGN - BRIDGE/STRUCTURE DESIGN
CIVIL/SITE DESIGN - GIS/GPS - CONSTRUCTION OBSERVATION

DRAWN BY: J.M. BRITT DATE: 4-23-14
CHECKED BY: G.M. GILLAND DATE: 5-6-14
DESIGN ENGINEER OF RECORD: G.M. GILLAND DATE: 5-6-14

P:\2013\131101 Hertford #33\Structures\DWG\Hertford_33_sd_PCG_WEI.dgn
7/1/2014 2:07:25 PM

DocuSign Envelope ID: 9470C23F-75AA-488A-BF2C-36FEFAA85328

STRUCTURAL STEEL NOTES

ALL INTERMEDIATE DIAPHRAGM STEEL AND CONNECTOR PLATES SHALL BE AASHTO M270 GRADE 50 OR APPROVED EQUAL.

TENSION ON THE ASTM A325 BOLTS THROUGH THE CHANNEL MEMBER SHALL BE CALIBRATED USING DIRECT TENSION INDICATOR WASHERS IN ACCORDANCE WITH THE STANDARD SPECIFICATIONS.

TENSION ON THE ASTM A449 BOLTS THROUGH THE GIRDER WEB SHALL BE SNUG TIGHTENED FOLLOWED BY AN ADDITIONAL 1/4 TURN.

THE PLATES, BENT PLATES, CHANNELS, AND ANGLES SHALL BE GALVANIZED OR METALLIZED IN ACCORDANCE WITH THE STANDARD SPECIFICATIONS. FOR THERMAL SPRAYED COATINGS (METALLIZATION), SEE SPECIAL PROVISIONS.

FOR METALLIZATION, APPLY AN 8 MIL THICK 99.99 PERCENT ZINC (W-Zn-1) THERMAL SPRAYED COATING WITH A 0.5 MIL THICK SEAL COAT TO ALL STEEL DIAPHRAGM SURFACES IN ACCORDANCE WITH THE THERMAL SPRAYED COATINGS SPECIAL PROVISION AND SECTION 442 OF THE STANDARD SPECIFICATIONS.

GALVANIZE THE HIGH STRENGTH BOLTS, NUTS, WASHERS AND DIRECT TENSION INDICATORS IN ACCORDANCE WITH THE STANDARD SPECIFICATIONS.

USE AN ASTM F436 HARDENED WASHER WITH STANDARD AND SLOTTED HOLES UNDER EACH BOLT HEAD AND NUT.

FOR BOLTS THROUGH THE GIRDER WEB, PROVIDE SUFFICIENT LENGTH OF THREADS ON ALL BOLTS TO ACCOMMODATE WASHERS AND THE THICKNESS OF CONNECTING MEMBER PLUS AT LEAST 1/4" PROJECTION BEYOND THE NUT.

INTERMEDIATE DIAPHRAGM ASSEMBLY SHALL COMPLY WITH SECTION 1072 OF THE STANDARD SPECIFICATIONS.

SUBMIT TWO SETS OF WORKING DRAWINGS FOR THE INTERMEDIATE DIAPHRAGM ASSEMBLY FOR REVIEW, COMMENTS AND ACCEPTANCE. AFTER REVIEW, COMMENTS, AND ACCEPTANCE, SUBMIT SEVEN SETS FOR DISTRIBUTION.

IN THE EXTERIOR BAYS, PLACE TEMPORARY STRUTS BETWEEN PRESTRESSED GIRDERS ADJACENT TO THE STEEL DIAPHRAGMS. STRUTS SHALL REMAIN IN PLACE 3 DAYS AFTER CONCRETE IS PLACED.

THE COST OF THE STEEL DIAPHRAGMS AND ASSEMBLIES SHALL BE INCLUDED IN THE UNIT PRICE BID FOR PRESTRESSED CONCRETE GIRDERS.

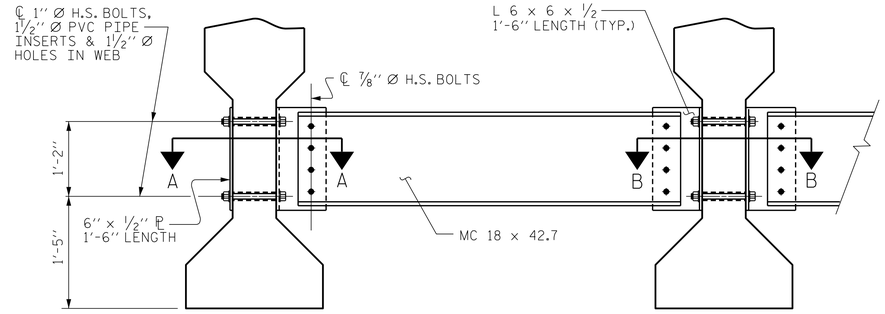

PART SECTION AT INTERMEDIATE DIAPHRAGM

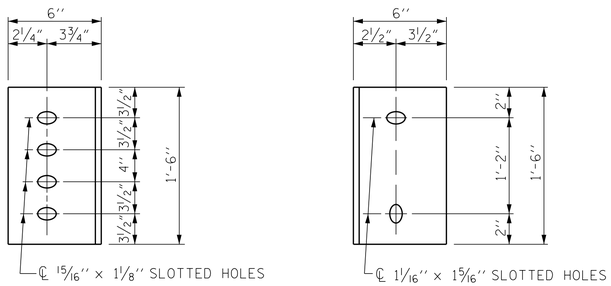

DIAPHRAGM FACE

WEB FACE

CONNECTOR PLATE DETAILS

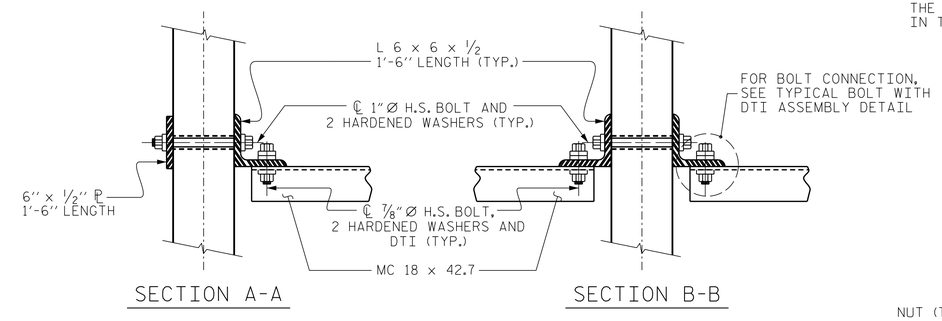

CONNECTION DETAILS

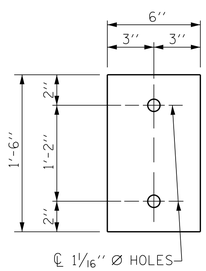

PLATE DETAILS

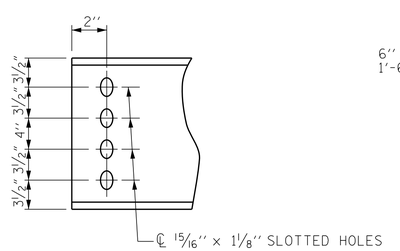

CHANNEL END

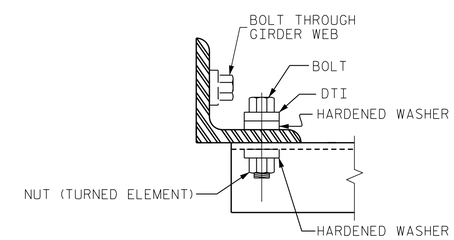

BOLT WITH DTI ASSEMBLY DETAIL

PROJECT NO. 17BP.1.R.58

HERTFORD COUNTY

STATION: 23+22.00 -L-

STATE OF NORTH CAROLINA
DEPARTMENT OF TRANSPORTATION
RALEIGH

SUPERSTRUCTURE

INTERMEDIATE STEEL DIAPHRAGMS FOR TYPE III PRESTRESSED CONCRETE GIRDERS

REVISIONS						SHEET NO.
NO.	BY:	DATE:	NO.	BY:	DATE:	S-14
1			3			TOTAL SHEETS
2			4			32

NORTH CAROLINA PROFESSIONAL SEAL 036400 ENGINEER GREGORY M. GILLAND

WETHERILL ENGINEERING
559 Jones Franklin Rd. Suite 164
Raleigh, N.C. 27606
Bus: 919 851 8077
Fax: 919 851 8107
License: F-0377
TRANSPORTATION PLANNING/DESIGN - BRIDGE/STRUCTURE DESIGN
CIVIL/SITE DESIGN - GIS/GPS - CONSTRUCTION OBSERVATION

DRAWN BY : J.M. BRITT DATE : 4-23-14
CHECKED BY: G.M. GILLAND DATE : 5-6-14
DESIGN ENGINEER OF RECORD: G.M. GILLAND DATE : 5-6-14

P:\2013\1313101 Hertford #33\Structures\DWG\Hertford_33_sd_INTDIA_WEI.dgn
7/17/2014 1:25:00 PM

DocuSign Envelope ID: 9470C23F-75AA-488A-BF2C-36FEFAA85328

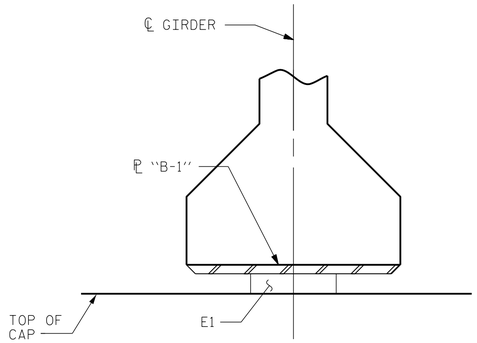

FIXED

SECTION F-F

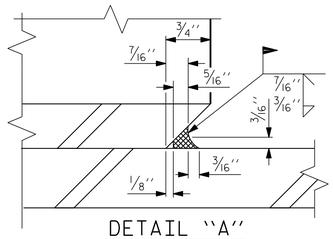

DETAIL "A"

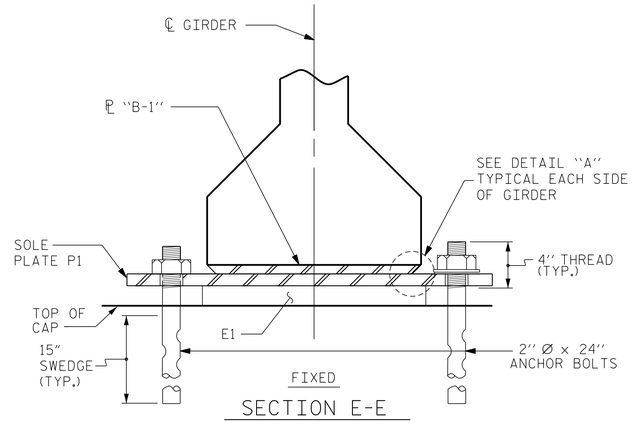

FIXED

SECTION E-E

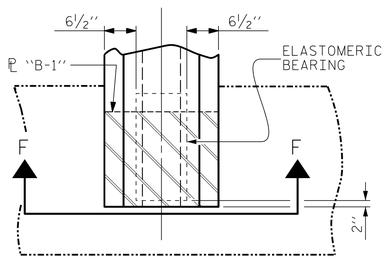

TYPICAL PLAN @ END BENT

(SHOWING INTEGRAL END BENT)

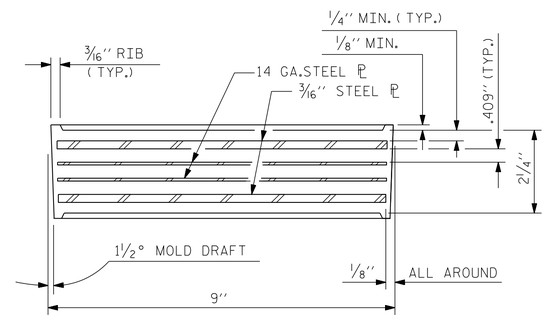

TYPICAL SECTION OF ELASTOMERIC BEARINGS

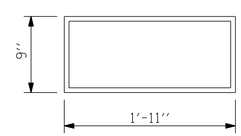

E1 (30 REQ'D)

PLAN VIEW OF ELASTOMERIC BEARING

TYPE V

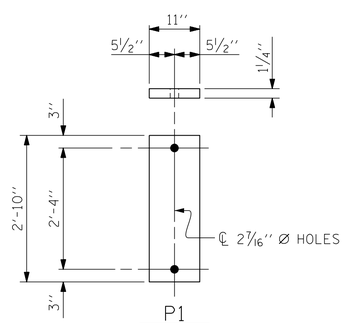

P1

(FIXED)

(20 REQ'D)

SOLE PLATE (P1) DETAIL

NOTES

AT ALL FIXED POINTS OF SUPPORT, NUTS FOR ANCHOR BOLTS ARE TO BE TIGHTENED FINGER TIGHT AND THEN BACKED OFF 1/2 TURN. THE THREAD OF THE NUT AND BOLT SHALL THEN BE BURRED WITH A SHARP POINTED TOOL.

STEEL SOLE PLATES, ANCHOR BOLTS, NUTS, AND WASHERS SHALL BE GALVANIZED IN ACCORDANCE WITH THE STANDARD SPECIFICATIONS.

PRIOR TO WELDING, GRIND THE GALVANIZED SURFACE OF THE PORTION OF THE EMBEDDED PLATE AND SOLE PLATE THAT ARE TO BE WELDED. AFTER WELDING, DAMAGED GALVANIZED SURFACES SHALL BE REPAIRED IN ACCORDANCE WITH THE STANDARD SPECIFICATIONS.

WHEN WELDING THE SOLE PLATE TO THE EMBEDDED PLATE IN THE GIRDER, USE TEMPERATURE INDICATING WAX PENS, OR OTHER SUITABLE MEANS, TO ENSURE THAT THE TEMPERATURE OF THE SOLE PLATE DOES NOT EXCEED 300°F. TEMPERATURES ABOVE THIS MAY DAMAGE THE ELASTOMER.

SOLE PLATE "P", BOLTS, NUTS AND WASHERS SHALL BE INCLUDED IN THE PAY ITEM FOR PRESTRESSED CONCRETE GIRDERS.

ANCHOR BOLTS SHALL MEET THE REQUIREMENTS OF ASTM A449. NUTS SHALL MEET THE REQUIREMENTS OF AASHTO M291-DH OR AASHTO M292-2H. WASHERS SHALL MEET THE REQUIREMENTS OF AASHTO M293. NO SHOP DRAWINGS ARE REQUIRED FOR ANCHOR BOLTS, NUTS AND WASHERS. SHOP INSPECTION IS REQUIRED.

ALL SURFACES OF BEARING PLATES SHALL BE SMOOTH AND STRAIGHT.

THE ELASTOMER IN THE STEEL REINFORCED BEARINGS SHALL HAVE A SHEAR MODULUS OF 0.160 KSI, IN ACCORDANCE WITH AASHTO M251.

FOR STEEL REINFORCED ELASTOMERIC BEARINGS, SEE SPECIAL PROVISIONS.

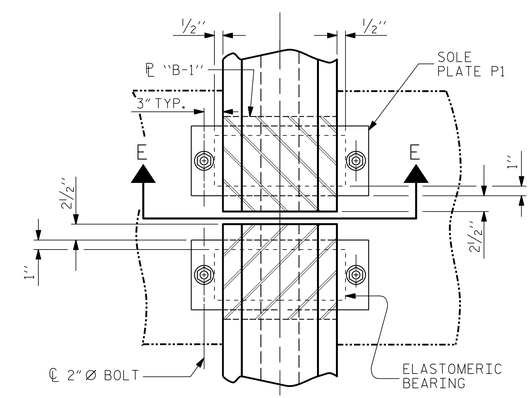

TYPICAL PLAN @ BENT

(SHOWING CONTINUOUS BENT)

PROJECT NO. 17BP.1.R.58

HERTFORD COUNTY

STATION: 23+22.00 -L-

MAXIMUM ALLOWABLE SERVICE LOADS	
D.L.+L.L. (NO IMPACT)	
TYPE V	365 k

STATE OF NORTH CAROLINA
DEPARTMENT OF TRANSPORTATION
RALEIGH

SUPERSTRUCTURE

ELASTOMERIC BEARING DETAILS

NORTH CAROLINA PROFESSIONAL SEAL 024400 ENGINEER GREGORY M. GILLAND

WETHERILL ENGINEERING
559 Jones Franklin Rd. Suite 164
Raleigh, N.C. 27606
Bus: 919 851 8077
Fax: 919 851 8107
License: F-0377

TRANSPORTATION PLANNING/DESIGN - BRIDGE/STRUCTURE DESIGN
CIVIL/SITE DESIGN - GIS/GPS - CONSTRUCTION OBSERVATION

REVISIONS						SHEET NO.
NO.	BY:	DATE:	NO.	BY:	DATE:	S-15
1			3			TOTAL SHEETS
2			4			32

DRAWN BY : J.M. BRITT DATE : 5-1-14
CHECKED BY: G.M. GILLAND DATE : 5-7-14
DESIGN ENGINEER OF RECORD: G.M. GILLAND DATE : 5-7-14

P:\2013\1313101 Hertford #33\Structures\DWG\Hertford_33_sd_BRG_WEI.dgn
7/1/2014 1:26:10 PM

DocuSign Envelope ID: 9470C23F-75AA-488A-BF2C-36FEFAA85328

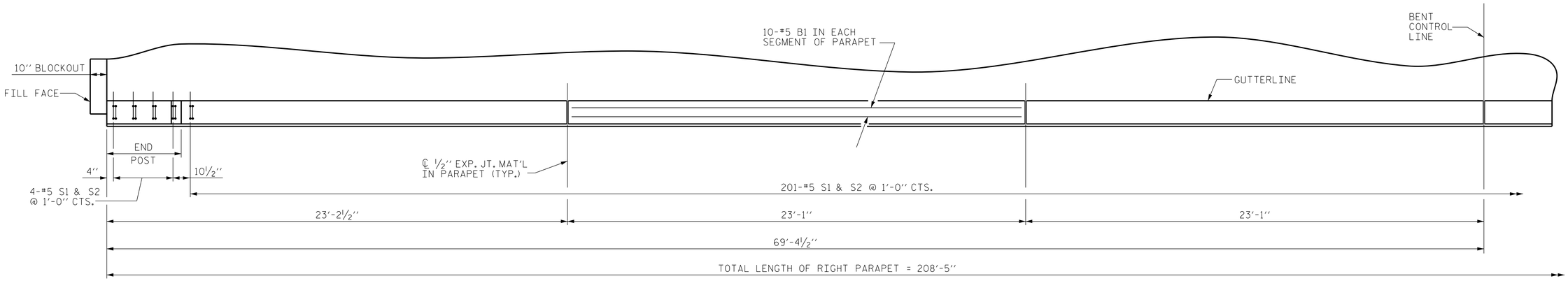

PLAN OF PARAPET - SPAN "A" OR "C"

RIGHT SIDE SPAN "A" PARAPET SHOWN, LEFT SIDE SIMILAR
(SPAN "C" SIMILAR BY ROTATION)

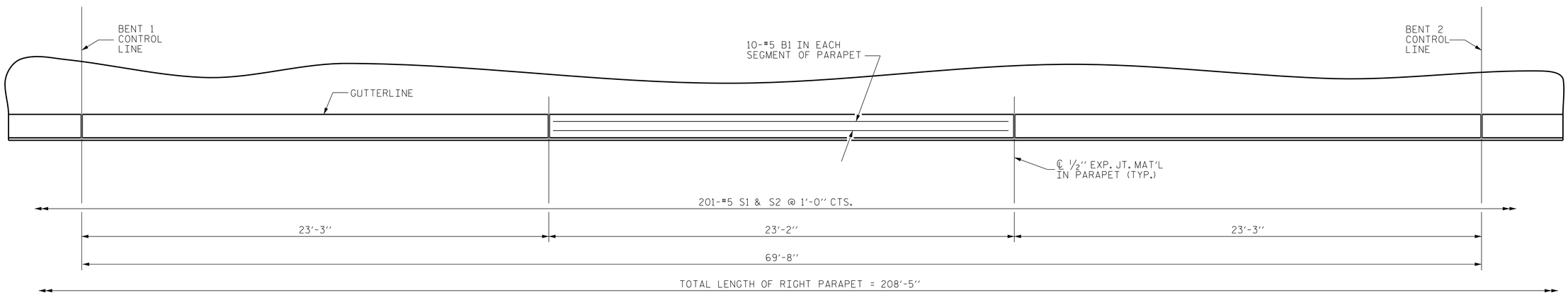

PLAN OF PARAPET - SPAN "B"

RIGHT SIDE PARAPET SHOWN, LEFT SIDE SIMILAR

PROJECT NO. 17BP.1.R.58
HERTFORD COUNTY
STATION: 23+22.00 -L-

SHEET 1 OF 2

STATE OF NORTH CAROLINA
DEPARTMENT OF TRANSPORTATION
RALEIGH

SUPERSTRUCTURE

CONCRETE PARAPET DETAILS

NORTH CAROLINA PROFESSIONAL SEAL 030400 ENGINEER GREGORY M. GILLAND
Docu Sign Envelope ID:

WETHERILL ENGINEERING
559 Jones Franklin Rd. Suite 164
Raleigh, N.C. 27606
Bus: 919 851 8077
Fax: 919 851 8107
License: F-0377

TRANSPORTATION PLANNING/DESIGN - BRIDGE/STRUCTURE DESIGN
CIVIL/SITE DESIGN - GIS/GPS - CONSTRUCTION OBSERVATION

REVISIONS							SHEET NO.
NO.	BY:	DATE:	NO.	BY:	DATE:		S-16
1			3				TOTAL SHEETS
2			4				32

DRAWN BY :	J.M. BRITT	DATE :	4-29-14
CHECKED BY:	G.M. GILLAND	DATE :	5-7-14
DESIGN ENGINEER OF RECORD:	G.M. GILLAND	DATE :	5-7-14

P:\2013\131101 Hertford #33\Structures\DWG\Hertford_33_sd_PARA_WEI.dgn
7/1/2014 1:27:22 PM

DocuSign Envelope ID: 9470C23F-75AA-488A-BF2C-36FEFAA85328

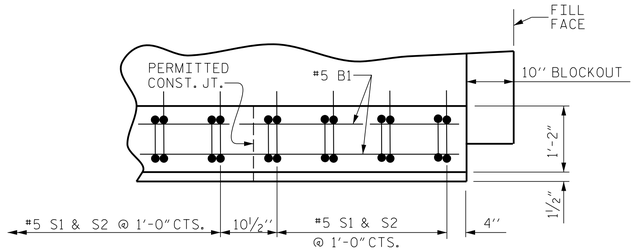

PLAN OF PARAPET

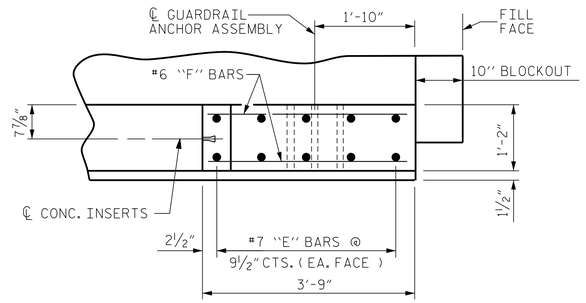

PLAN OF END POST

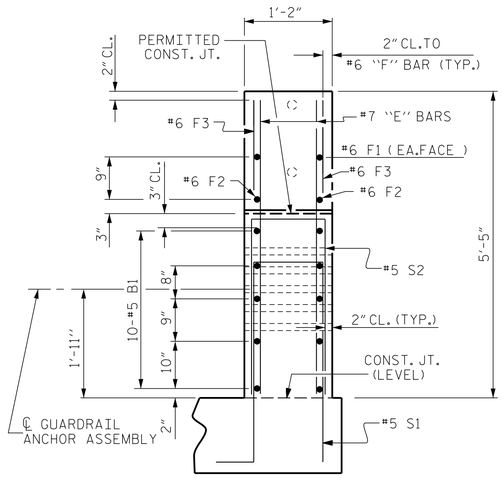

END VIEW

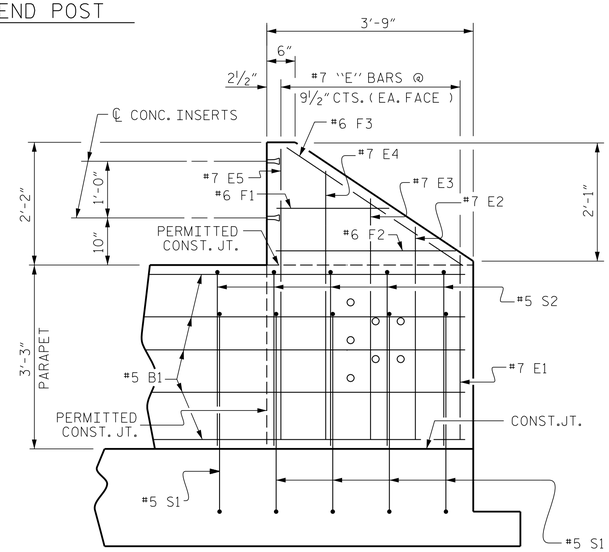

ELEVATION

PARAPET AND END POST FOR TWO BAR RAIL

NOTES

THE PARAPET IN THE CONTINUOUS UNIT SHALL NOT BE CAST UNTIL ALL SLAB CONCRETE IN THE UNIT HAS BEEN CAST AND HAS REACHED A MINIMUM COMPRESSIVE STRENGTH OF 3,000 PSI.

ALL REINFORCING STEEL IN PARAPET AND END POST SHALL BE EPOXY COATED.

THE #5 S1 & S2 BARS MAY BE SHIFTED SLIGHTLY IN ORDER TO MAINTAIN A 2'' MINIMUM CLEARANCE TO THE ½'' EXPANSION JOINT MATERIAL IN PARAPET.

FOR DETAILS OF CONCRETE INSERTS IN END POSTS, SEE ''2 BAR METAL RAIL'' SHEETS.

FOR DETAILS OF GUARDRAIL ANCHOR ASSEMBLIES, SEE ''GUARDRAIL ANCHORAGE DETAILS FOR METAL RAILS'' SHEET.

GROOVED CONTRACTION JOINTS, ½'' IN DEPTH, SHALL BE TOOLED IN ALL EXPOSED FACES OF THE PARAPET IN ACCORDANCE WITH ARTICLE 825-10(B) OF THE STANDARD SPECIFICATIONS. THE CONTRACTION JOINT SHALL BE LOCATED AT EACH THIRD POINT BETWEEN EXPANSION JOINTS.

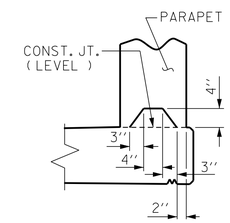

SECTION S-S

AT DAM IN OPEN JOINT (THIS IS TO BE USED ONLY WHEN SLIP FORM IS USED)

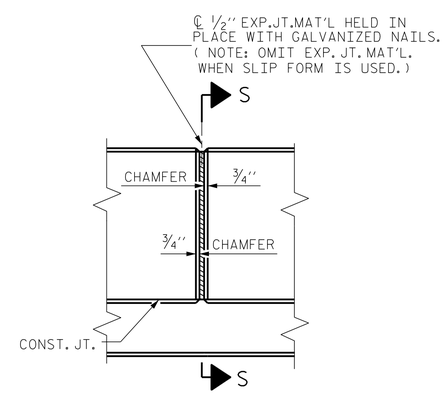

ELEVATION AT EXPANSION JOINTS

BILL OF MATERIAL

FOR CONCRETE PARAPET & END POST ONLY

BAR	No.	SIZE	TYPE	LENGTH	WEIGHT
✳ B1	180	#5	STR.	22'-9''	4271
✳ E1	8	#7	STR.	3'-3''	53
✳ E2	8	#7	STR.	3'-9''	61
✳ E3	8	#7	STR.	4'-3''	69
✳ E4	8	#7	STR.	4'-9''	78
✳ E5	8	#7	STR.	5'-1''	83
✳ F1	8	#6	STR.	1'-10''	22
✳ F2	8	#6	STR.	3'-0''	36
✳ F3	8	#6	STR.	3'-8''	44
✳ S1	418	#5	1	6'-11''	3016
✳ S2	418	#5	2	7'-0''	3052

✳ EPOXY COATED REINFORCING STEEL 10,785 LBS.

CLASS AA CONCRETE 59.3 C.Y.

1'-2'' x 3'-3'' CONCRETE PARAPET 416.83 L.F.

✳ THESE BARS ARE EPOXY COATED

BAR TYPES

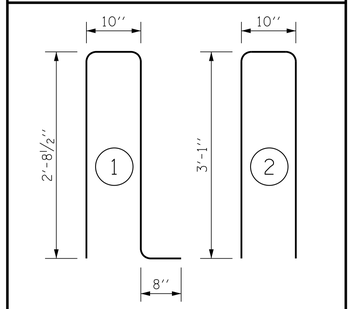

BAR DIMENSIONS ARE OUT TO OUT

PROJECT NO. 17BP.1.R.58

HERTFORD COUNTY

STATION: 23+22.00 -L-

SHEET 2 OF 2

STATE OF NORTH CAROLINA
DEPARTMENT OF TRANSPORTATION
RALEIGH

SUPERSTRUCTURE

CONCRETE PARAPET DETAILS

WETHERILL ENGINEERING
559 Jones Franklin Rd. Suite 164
Raleigh, N.C. 27606
Bus: 919 851 8077
Fax: 919 851 8107
License: F-0377
TRANSPORTATION PLANNING/DESIGN - BRIDGE/STRUCTURE DESIGN
CIVIL/SITE DESIGN - GIS/GPS - CONSTRUCTION OBSERVATION

NORTH CAROLINA PROFESSIONAL SEAL 024400 ENGINEER GREGORY M. GILLAND

REVISIONS							SHEET NO.
NO.	BY:	DATE:	NO.	BY:	DATE:		S-17
1			3				TOTAL SHEETS
2			4				32

DRAWN BY : J.M. BRITT DATE : 4-29-14
CHECKED BY: G.M. GILLAND DATE : 5-7-14
DESIGN ENGINEER OF RECORD: G.M. GILLAND DATE : 5-7-14

P:\2013\13131.01 Hertford #33\Structures\DWG\Hertford_33_sd_PARA_WE1.dgn
7/1/2014 2:08:45 PM

DocuSign Envelope ID: 9470C23F-75AA-488A-BF2C-36FEFAA85328

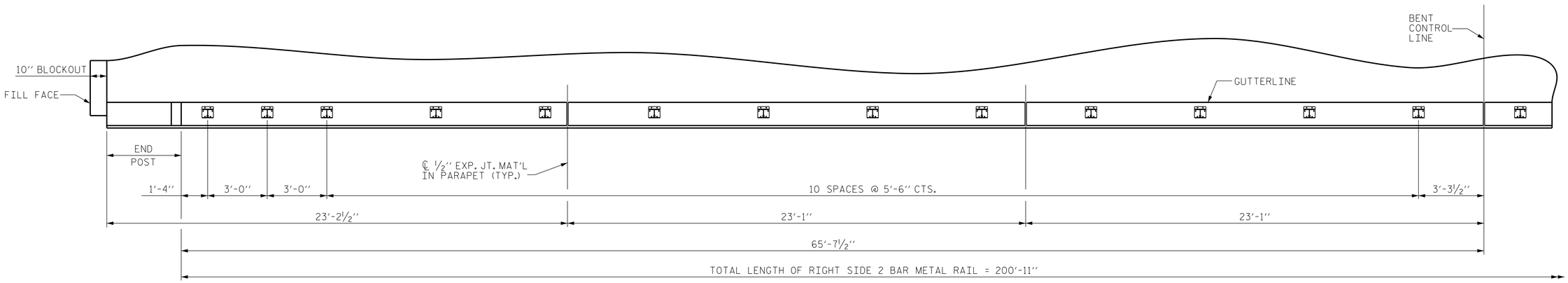

PLAN OF RAIL POST SPACING - SPAN ''A'' OR ''C''

RIGHT SIDE SPAN ''A'' PARAPET SHOWN, LEFT SIDE SIMILAR
(SPAN ''C'' SIMILAR BY ROTATION)

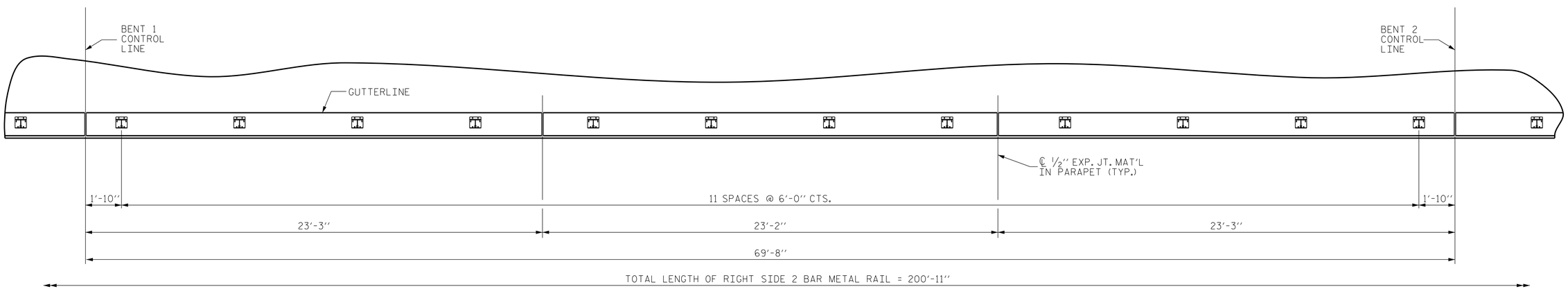

PLAN OF RAIL POST SPACING - SPAN ''B''

RIGHT SIDE PARAPET SHOWN, LEFT SIDE SIMILAR

PROJECT NO. 17BP.1.R.58
HERTFORD COUNTY
STATION: 23+22.00 -L-

STATE OF NORTH CAROLINA
DEPARTMENT OF TRANSPORTATION
RALEIGH

SUPERSTRUCTURE

2 BAR METAL RAIL POST SPACING

NORTH CAROLINA PROFESSIONAL SEAL 034400 ENGINEER GREGORY M. GILLAND

WETHERILL ENGINEERING
559 Jones Franklin Rd. Suite 164
Raleigh, N.C. 27606
Bus: 919 851 8077
Fax: 919 851 8107
License: F-0377
TRANSPORTATION PLANNING/DESIGN - BRIDGE/STRUCTURE DESIGN
CIVIL/SITE DESIGN - GIS/GPS - CONSTRUCTION OBSERVATION

REVISIONS								SHEET NO.
NO.	BY:	DATE:	NO.	BY:	DATE:			S-18
1			3					TOTAL SHEETS
2			4					32

DRAWN BY : J.M. BRITT DATE : 4-29-14
CHECKED BY: G.M. GILLAND DATE : 5-7-14
DESIGN ENGINEER OF RECORD: G.M. GILLAND DATE : 5-7-14

P:\2013\131101 Hertford #33\Structures\DWG\Hertford_33_sd_2BMR_WE1.dgn
7/1/2014 1:33:27 PM

DocuSign Envelope ID: 9470C23F-75AA-488A-BF2C-36FEFAA85328

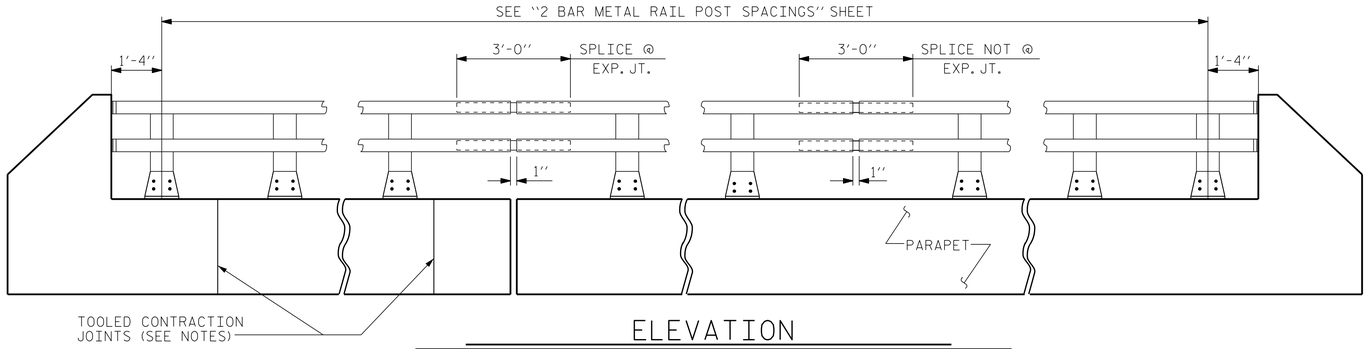

ELEVATION

NOTE : FOR ATTACHMENT OF METAL RAIL TO END POST, SEE "2 BAR METAL RAIL", SHEET 3 OF 3

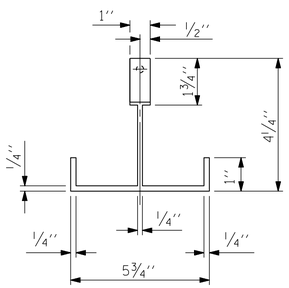

PLAN

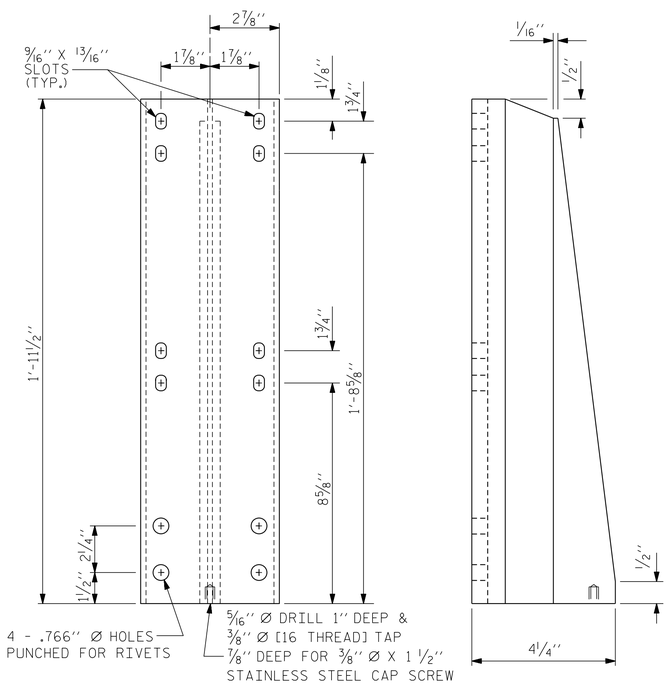

FRONT ELEVATION

SIDE ELEVATION

DETAILS OF POST

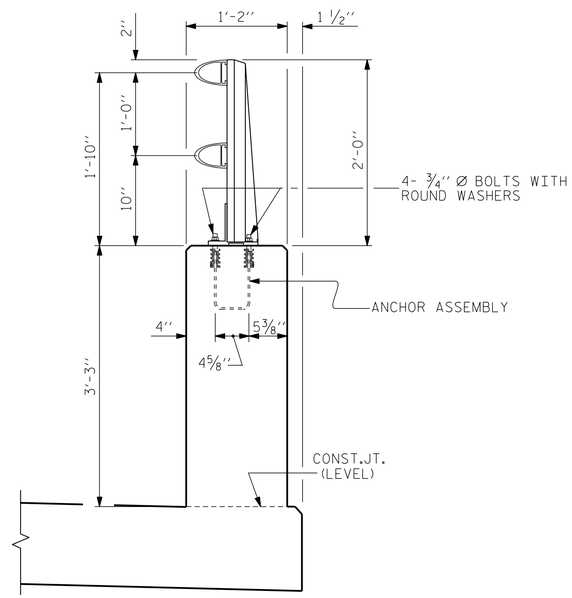

SECTION THRU PARAPET AND RAIL

NOTES

AT THE CONTRACTOR'S OPTION, METAL RAIL MAY BE EITHER ALUMINUM OR GALVANIZED STEEL IN ACCORDANCE WITH THE REQUIREMENTS OF THE GENERAL NOTES AND THE FOLLOWING SPECIFICATIONS FOR THE ALTERNATE MATERIALS; HOWEVER, THE CONTRACTOR WILL BE REQUIRED TO USE THE SAME RAIL MATERIAL ON ALL STRUCTURES ON THE PROJECT FOR WHICH METAL RAIL IS DESIGNATED.

UNLESS OTHERWISE REQUIRED IN THE CONTRACT DOCUMENTS, THE CONTRACTOR HAS THE OPTION TO USE AN ALTERNATE TO THE 2 BAR METAL RAIL. THE ALTERNATE RAIL SHALL MEET THE REQUIREMENTS OF THE AASHTO LRFD BRIDGE DESIGN SPECIFICATIONS AND MUST BE LISTED ON THE DEPARTMENT'S APPROVED PRODUCTS LIST (APL) UNDER "2 BAR METAL RAIL ALTERNATE". ADJUSTMENTS TO THE CONCRETE PARAPET WILL NOT BE ALLOWED.

ALUMINUM RAILS

MATERIAL FOR POSTS, BASES AND RAILS, EXPANSION BARS AND CLAMP BARS SHALL BE ASTM B-221 ALLOY 6061-T6.

MATERIAL FOR RIVETS SHALL BE ASTM B316 ALLOY 6061-T6. RIVETS SHALL BE STANDARD BUTTON HEAD AND CONE POINT COLD DRIVEN AS PER DRAWING.

THE BASE OF RAIL POSTS, OR ANY OTHER ALUMINUM SURFACE IN CONTACT WITH CONCRETE SHALL BE THOROUGHLY COATED WITH AN ALUMINUM IMPREGNATED CAULKING COMPOUND OF APPROVED QUALITY.

MATERIAL FOR SHIMS TO BE ASTM B209 ALLOY 6061-T6.

GALVANIZED STEEL RAILS

MATERIAL AND GALVANIZING ARE TO CONFORM TO THE FOLLOWING SPECIFICATIONS:

POST, POST BASES, RAILS, EXPANSION BARS AND CLAMP BARS: AASHTO M270 GRADE 36 STRUCTURAL STEEL - GALVANIZED TO AASHTO M111.

RIVETS: RIVETS SHALL MEET THE REQUIREMENTS OF ASTM A502 FOR GRADE 1 RIVETS.

THE CUT ENDS OF GALVANIZED STEEL RAILING, AFTER GRINDING SMOOTH SHALL BE GIVEN TWO COATS OF ZINC RICH PAINT MEETING THE REQUIREMENTS OF FEDERAL SPECIFICATION MIL-P-26915 USAF TYPE 1, OR OF FEDERAL SPECIFICATIONS TT-P-641.

SHIMS: SHIMS SHALL MEET THE REQUIREMENTS OF ASTM A570 FOR GRADE 33 OR A611 FOR GRADE C AND SHALL BE GALVANIZED IN ACCORDANCE WITH AASHTO M111.

RAIL CAPS: RAIL CAPS SHALL MEET THE REQUIREMENTS OF ASTM A570 FOR GRADE 33 OR A611 FOR GRADE C AND SHALL BE GALVANIZED IN ACCORDANCE WITH AASHTO M111.

GENERAL NOTES

RAILING SHALL BE CONTINUOUS FROM END POST TO END POST OF BRIDGE. EACH JOINT IN RAIL LENGTH SHALL BE SPLICED AS DETAILED. PANEL LENGTHS OF RAIL SHALL BE ATTACHED TO A MINIMUM OF THREE POSTS.

FOR END OF RAIL TO CLEAR FACE OF CONCRETE END POST DIMENSION, SEE STANDARD NO. BMR2.

CAP SCREWS SHALL BE ASTM F593 ALLOY 305 STAINLESS STEEL. WASHERS SHALL MEET THE REQUIREMENTS OF ASTM F844 EXCEPT THEY SHALL BE MADE FROM ALLOY 304 STAINLESS STEEL.

CERTIFIED MILL REPORTS ARE REQUIRED FOR RAILS AND POSTS. SHOP INSPECTION IS NOT REQUIRED.

METAL RAIL POSTS SHALL BE SET NORMAL TO CURB GRADE.

METHOD OF MEASUREMENT FOR METAL RAILS: FOR LENGTH OF METAL RAILS TO BE PAID FOR, SEE THE STANDARD SPECIFICATIONS.

CURVED RAIL USAGE: WHERE RAILS ARE TO BE USED ON BRIDGES ON HORIZONTAL AND/OR VERTICAL CURVATURE THE CONTRACTOR MAY, AT HIS OPTION, HAVE THE REQUIRED CURVATURE IN THE RAIL FORMED IN THE SHOP OR IN THE FIELD. IN EITHER EVENT, THE RAIL SHALL CONFORM WITHOUT BUCKLING OR KINKING TO THE REQUIRED CURVATURE IN A UNIFORM MANNER ACCEPTABLE TO THE ENGINEER.

TO INSURE FUTURE IDENTIFICATION OF THE FABRICATOR, A PERMANENT IDENTIFYING MARK SHALL BE PLACED ON EACH POST. THE METHOD OF MARKING AND LOCATION SHALL BE SUCH THAT IT DOES NOT DETRACT FROM THE APPEARANCE OF THE POST, BUT REMAINS VISIBLE AFTER RAIL PLACEMENT.

SHIMS SHALL BE USED AS NECESSARY FOR POST ALIGNMENT.

ALLOY 6351-T5 MAY BE SUBSTITUTED FOR ALLOY 6061-T6 WHERE APPLICABLE.

MINOR VARIATIONS IN DETAILS OF METAL RAIL WILL BE CONSIDERED. DETAILS OF SUCH VARIATIONS, IF DESIRED, SHALL BE SUBMITTED FOR APPROVAL.

GROOVED CONTRACTION JOINTS, 1/2" IN DEPTH, SHALL BE TOOLED IN ALL EXPOSED FACES OF THE PARAPET AND IN ACCORDANCE WITH ARTICLE 825-10(B) OF THE STANDARD SPECIFICATIONS. A CONTRACTION JOINT SHALL BE LOCATED AT EACH THIRD POINT BETWEEN PARAPET EXPANSION JOINTS.

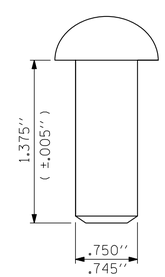

RIVET DETAIL

LENGTH = 401.83 LIN. FT.

PROJECT NO. 17BP.1.R.58

HERTFORD COUNTY

STATION: 23+22.00 -L-

SHEET 1 OF 3

STATE OF NORTH CAROLINA
DEPARTMENT OF TRANSPORTATION
RALEIGH

SUPERSTRUCTURE

2 BAR METAL RAIL

NORTH CAROLINA PROFESSIONAL SEAL 19400 ENGINEER GREGORY M. GILLAND

WETHERILL ENGINEERING
559 Jones Franklin Rd. Suite 164
Raleigh, N.C. 27606
Bus: 919 851 8077
Fax: 919 851 8107
License: F-0377

TRANSPORTATION PLANNING/DESIGN - BRIDGE/STRUCTURE DESIGN
CIVIL/SITE DESIGN - GIS/GPS - CONSTRUCTION OBSERVATION

REVISIONS						SHEET NO.
NO.	BY:	DATE:	NO.	BY:	DATE:	S-19
1			3			TOTAL SHEETS
2			4			32

DRAWN BY : J.M. BRITT DATE : 4-29-14
CHECKED BY: G.M. GILLAND DATE : 5-7-14
DESIGN ENGINEER OF RECORD: G.M. GILLAND DATE : 5-7-14

P:\2013\131101 Hertford #33\Structures\DWG\Hertford_33_sd_2BMR_WE1.dgn
7/1/2014 1:33:53 PM

DocuSign Envelope ID: 9470C23F-75AA-488A-BF2C-36FEFAA85328

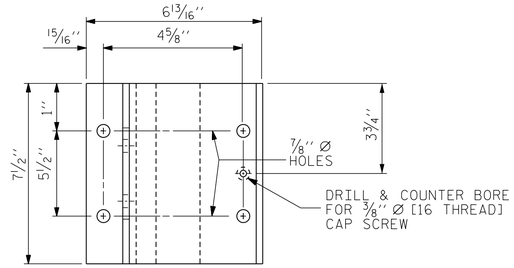

PLAN

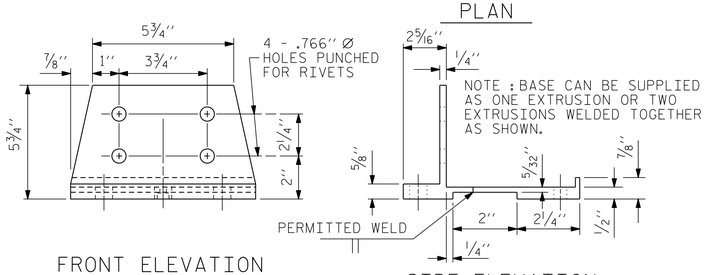

FRONT ELEVATION

SIDE ELEVATION

POST BASE DETAILS

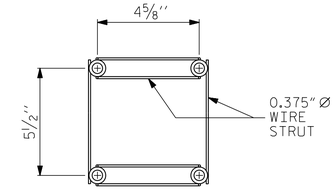

PLAN

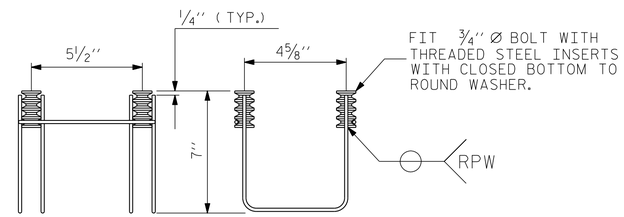

SIDE VIEW

ELEVATION

4-BOLT METAL RAIL ANCHOR ASSEMBLY

(76 ASSEMBLIES REQUIRED)

NOTES

STRUCTURAL CONCRETE ANCHOR ASSEMBLY

THE STRUCTURAL CONCRETE ANCHOR ASSEMBLY SHALL CONSIST OF THE FOLLOWING COMPONENTS :

A. FERRULES SHALL BE MADE FROM STEEL MEETING THE REQUIREMENTS OF AASHTO M169, GRADE 12L14 AND SHALL HAVE A MINIMUM LENGTH OF THREADS OF 2" FOR 3/4" FERRULES.

B. 4 - 3/4" Ø X 2 1/2" BOLTS WITH WASHERS. BOLTS SHALL CONFORM TO THE REQUIREMENTS OF ASTM A307. BOLTS AND WASHERS SHALL BE GALVANIZED. AT THE CONTRACTOR'S OPTION, STAINLESS STEEL BOLTS AND WASHERS MAY BE USED AS AN ALTERNATE FOR THE 3/4" Ø X 2 1/2" GALVANIZED BOLTS AND WASHERS. THEY SHALL CONFORM TO OR EXCEED THE MECHANICAL REQUIREMENTS OF ASTM A307. THE USE OF THIS ALTERNATE SHALL BE APPROVED BY THE ENGINEER.

C. WIRE STRUT SHOWN IN THE CONCRETE ANCHOR ASSEMBLY DETAIL IS THE MINIMUM ALLOWABLE SIZE AND SHALL HAVE A MINIMUM TENSILE STRENGTH OF 100,000 PSI. AS AN OPTION, A 7/16" Ø WIRE STRUT WITH A MINIMUM TENSILE STRENGTH OF 90,000 PSI IS ACCEPTABLE.

D. THE METAL RAIL ANCHOR ASSEMBLIES TO BE HOT DIPPED GALVANIZED TO CONFORM TO REQUIREMENTS OF AASHTO M111.

E. THE COST OF THE METAL RAIL ANCHOR ASSEMBLY WITH BOLTS AND WASHERS COMPLETE IN PLACE SHALL BE INCLUDED IN THE PRICE BID FOR LINEAR FEET OF METAL RAIL.

F. BOLTS TO BE TIGHTENED ONE-HALF TURN WITH A WRENCH FROM A FINGER-TIGHT POSITION.

THE CONTRACTOR MAY USE ADHESIVELY ANCHORED ANCHOR BOLTS IN PLACE OF THE METAL RAIL ANCHOR ASSEMBLY. LEVEL ONE FIELD TESTING IS REQUIRED, AND THE YIELD LOAD OF THE 3/4" Ø BOLT IS 10 KIPS. FOR ADHESIVELY ANCHORED ANCHOR BOLTS OR DOWELS, SEE THE STANDARD SPECIFICATIONS.

WHEN ADHESIVELY ANCHORED ANCHOR BOLTS ARE USED, BOLTS SHALL MEET THE REQUIREMENTS OF ASTM F593 ALLOY 304 STAINLESS STEEL WITH MINIMUM 75,000 PSI ULTIMATE STRENGTH. NUTS SHALL MEET THE REQUIREMENTS OF ASTM F594 ALLOY 304 STAINLESS STEEL AND WASHERS SHALL MEET THE REQUIREMENTS OF ASTM F844 EXCEPT THEY SHALL BE MADE FROM ALLOY 304 STAINLESS STEEL.

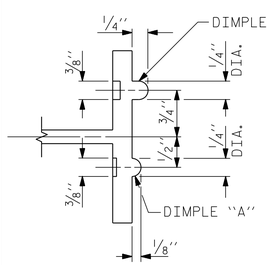

SECTION B - B

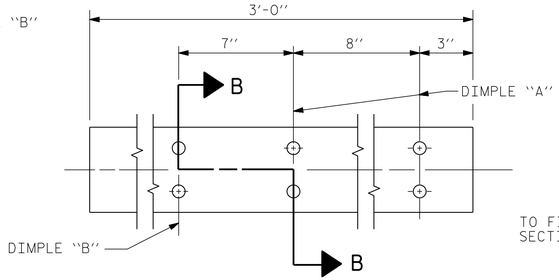

EXPANSION BAR DETAILS

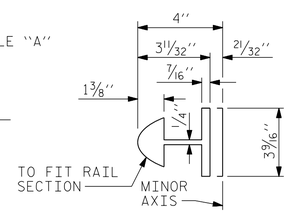

BAR SECTION

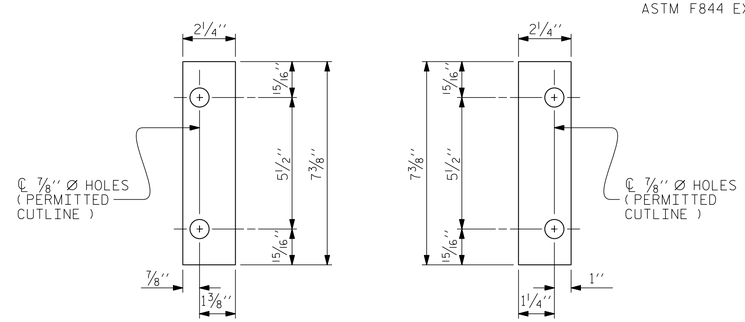

FRONT PLATE

REAR PLATE

SHIM DETAILS

NOTE :
SHIMS MAY BE CUT ALONG PERMITTED CUTLINE OR SLOTTED TO EDGE OF PLATE TO FACILITATE PLACEMENT.

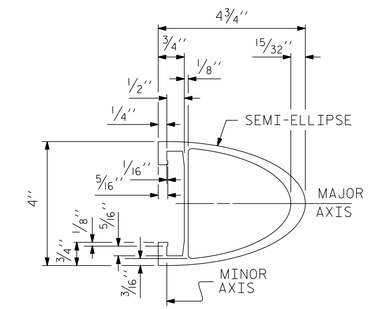

RAIL SECTION

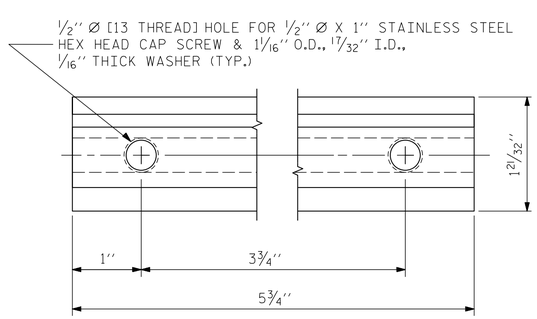

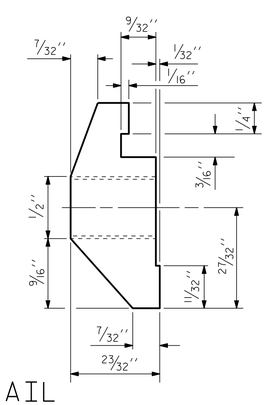

CLAMP BAR DETAIL

(4 REQUIRED PER POST)

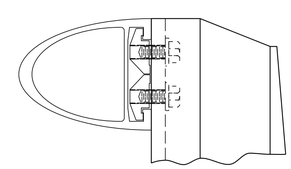

CLAMP ASSEMBLY

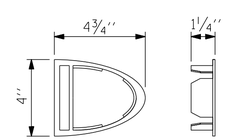

RAIL CAP

PROJECT NO. 17BP.1.R.58

HERTFORD COUNTY

STATION: 23+22.00 -L-

SHEET 2 OF 3

STATE OF NORTH CAROLINA
DEPARTMENT OF TRANSPORTATION
RALEIGH

SUPERSTRUCTURE

2 BAR METAL RAIL

NORTH CAROLINA PROFESSIONAL SEAL 024400 ENGINEER GREGORY M. GILLAND

WETHERILL ENGINEERING
559 Jones Franklin Rd. Suite 164
Raleigh, N.C. 27606
Bus: 919 851 8077
Fax: 919 851 8107
License: F-0377

TRANSPORTATION PLANNING/DESIGN - BRIDGE/STRUCTURE DESIGN
CIVIL/SITE DESIGN - GIS/GPS - CONSTRUCTION OBSERVATION

REVISIONS						SHEET NO.
NO.	BY:	DATE:	NO.	BY:	DATE:	S-20
1			3			TOTAL SHEETS
2			4			32

DRAWN BY :	J.M. BRITT	DATE :	4-29-14
CHECKED BY:	G.M. GILLAND	DATE :	5-7-14
DESIGN ENGINEER OF RECORD:	G.M. GILLAND	DATE :	5-7-14

P:\2013\131101 Hertford #33\Structures\DWG\Hertford_33_sd_2BMR_WE1.dgn
7/1/2014 1:34:30 PM

DocuSign Envelope ID: 9470C23F-75AA-488A-BF2C-36FEFAA85328

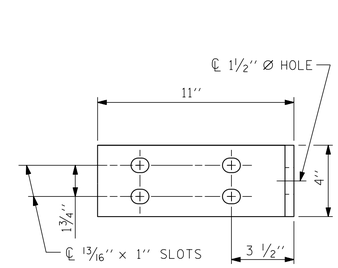

ELEVATION

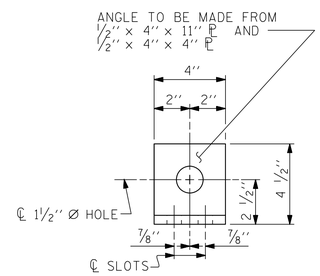

END VIEW

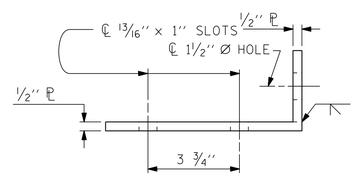

TOP VIEW

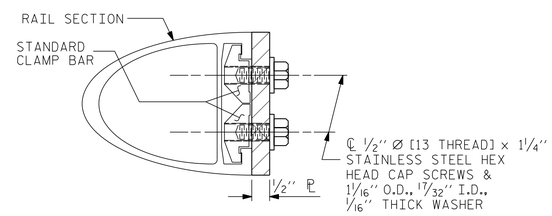

SECTION H-H

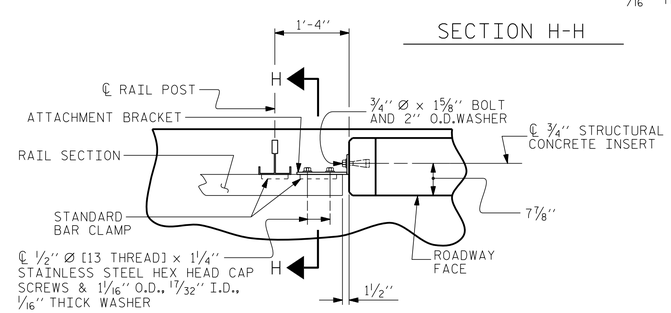

PLAN - RAIL AND END POST

DETAILS FOR ATTACHING METAL RAIL TO END POST

NOTES

STRUCTURAL CONCRETE INSERT

THE STRUCTURAL CONCRETE INSERT ASSEMBLY SHALL CONSIST OF THE FOLLOWING COMPONENTS:

A. FERRULES SHALL BE MADE FROM STEEL MEETING THE REQUIREMENTS OF AASHTO M169, GRADE 12L14 AND SHALL HAVE A MINIMUM LENGTH OF THREADS OF 1½''.

B. 1 - ¾'' Ø X 1⅝'' BOLT WITH WASHER. BOLT SHALL CONFORM TO THE REQUIREMENTS OF ASTM A307. BOLT AND WASHER SHALL BE GALVANIZED. (AT THE CONTRACTOR'S OPTION, STAINLESS STEEL BOLT AND WASHER MAY BE USED AS AN ALTERNATE FOR THE ¾'' Ø X 1⅝'' GALVANIZED BOLT AND WASHER. THEY SHALL CONFORM TO OR EXCEED THE MECHANICAL REQUIREMENTS OF ASTM A307. THE USE OF THIS ALTERNATE SHALL BE APPROVED BY THE ENGINEER.)

C. WIRE STRUT SHOWN IN THE CONCRETE INSERT ASSEMBLY DETAIL IS THE MINIMUM ALLOWABLE SIZE AND SHALL HAVE A MINIMUM TENSILE STRENGTH OF 100,000 PSI. AS AN OPTION, A 7/16'' Ø WIRE STRUT WITH A MINIMUM TENSILE STRENGTH OF 90,000 PSI IS ACCEPTABLE.

NOTES

METAL RAIL TO END POST CONNECTION

THE METAL RAIL TO END POST CONNECTION SHALL CONSIST OF THE FOLLOWING COMPONENTS:

A. ½'' PLATES SHALL CONFORM TO AASHTO M270 GRADE 36 AND SHALL BE GALVANIZED AFTER FABRICATION.

B. ¾'' STRUCTURAL CONCRETE INSERT SHALL HAVE A WORKING LOAD SHEAR CAPACITY OF 4800 LBS. THE FERRULES SHALL ENGAGE A ¾''Ø X 1⅝'' BOLT WITH 2'' O.D. WASHER IN PLACE. THE ¾''Ø X 1⅝'' BOLT SHALL HAVE N. C. THREADS.

C. CAP SCREWS FOR RAIL ATTACHMENT TO ANGLE SHALL CONFORM TO THE REQUIREMENTS OF ASTM F593 ALLOY 305 STAINLESS STEEL. CAP SCREWS TO BE CENTERED IN SLOTS AT 60°F.

D. STANDARD CLAMP BARS (SEE METAL RAIL SHEET).

E. ½'' Ø PIPE SLEEVES (IF REQUIRED) TO BE GALVANIZED.

THE COST OF THE STANDARD CLAMP BARS AND CAP SCREWS USED IN THE METAL RAIL TO END POST CONNECTION SHALL BE INCLUDED IN THE UNIT CONTRACT PRICE BID FOR LINEAR FEET OF 1 OR 2 BAR METAL RAILS.

THE ¾'' STRUCTURAL CONCRETE INSERT WITH BOLT SHALL BE ASSEMBLED IN THE SHOP.

THE COST OF THE ¾'' STRUCTURAL CONCRETE INSERT ASSEMBLY, AND THE ½'' PLATES COMPLETE IN PLACE SHALL BE INCLUDED IN THE VARIOUS PAY ITEMS.

THE CONTRACTOR, AT HIS OPTION, MAY USE AN ADHESIVE BONDING SYSTEM IN LIEU OF THE STRUCTURAL CONCRETE INSERT EMBEDDED IN THE END POST. IF THE ADHESIVE BONDING SYSTEM IS USED, THE ¾'' Ø X 1⅝'' BOLT WITH WASHER SHALL BE REPLACED WITH A ¾''Ø X 6½'' BOLT AND 2'' O.D. WASHER. ALL SPECIFICATIONS THAT APPLY TO THE ¾'' Ø X 1⅝'' BOLT SHALL APPLY TO THE ¾''Ø X 6 ½'' BOLT. FIELD TESTING OF THE ADHESIVE BONDING SYSTEM IS NOT REQUIRED.

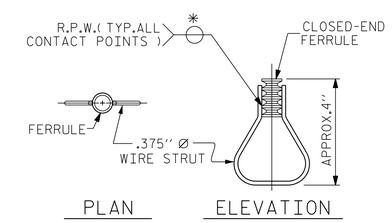

PLAN ELEVATION

STRUCTURAL CONCRETE INSERT

* EACH WELDED ATTACHMENT OF WIRE TO FERRULE SHALL DEVELOP THE TENSILE STRENGTH OF THE WIRE.

PROJECT NO. 17BP.1.R.58

HERTFORD COUNTY

STATION: 23+22.00 -L-

SHEET 3 OF 3

STATE OF NORTH CAROLINA
DEPARTMENT OF TRANSPORTATION
RALEIGH

SUPERSTRUCTURE

2 BAR METAL RAIL

NORTH CAROLINA PROFESSIONAL SEAL 030400 ENGINEER GREGORY M. GILLAND

WETHERILL ENGINEERING
559 Jones Franklin Rd. Suite 164
Raleigh, N.C. 27606
Bus: 919 851 8077
Fax: 919 851 8107
License: F-0377
TRANSPORTATION PLANNING/DESIGN - BRIDGE/STRUCTURE DESIGN
CIVIL/SITE DESIGN - GIS/GPS - CONSTRUCTION OBSERVATION

REVISIONS						SHEET NO.
NO.	BY:	DATE:	NO.	BY:	DATE:	S-21
1			3			TOTAL SHEETS
2			4			32

DRAWN BY :	J.M. BRITT	DATE :	4-29-14
CHECKED BY:	G.M. GILLAND	DATE :	5-7-14
DESIGN ENGINEER OF RECORD:	G.M. GILLAND	DATE :	5-7-14

P:\2013\1313101 Hertford #33\Structures\DWG\Hertford_33_sd_2BMR_WEI.dgn
7/1/2014 1:35:18 PM

DocuSign Envelope ID: 9470C23F-75AA-488A-BF2C-36FEFAA85328

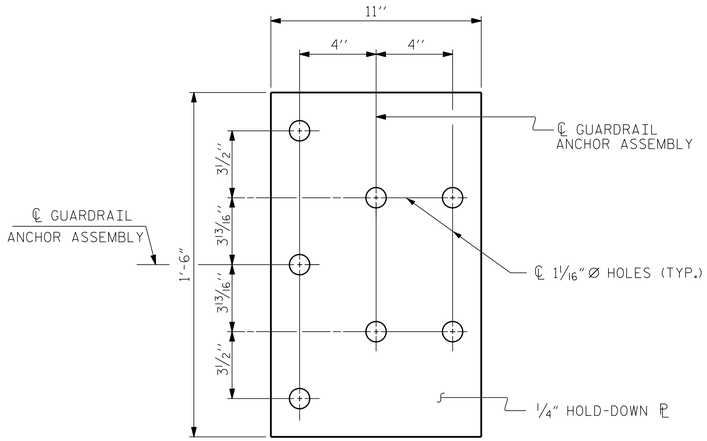

PLAN

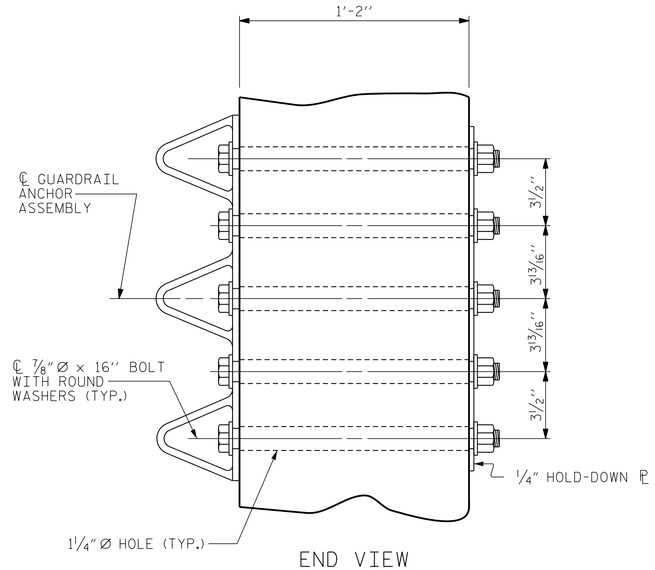

END VIEW

GUARDRAIL ANCHOR ASSEMBLY DETAILS

NOTES

THE GUARDRAIL ANCHOR ASSEMBLY SHALL CONSIST OF A 1/4'' HOLD DOWN PLATE AND 7 - 7/8'' Ø BOLTS WITH NUTS AND WASHERS.

THE HOLD-DOWN PLATE SHALL CONFORM TO AASHTO M270 GRADE 36. AFTER FABRICATION, THE HOLD-DOWN PLATE SHALL BE HOT-DIP GALVANIZED IN ACCORDANCE WITH AASHTO M111.

BOLTS SHALL CONFORM TO THE REQUIREMENTS OF ASTM A307 AND NUTS SHALL CONFORM TO THE REQUIREMENTS OF AASHTO M291. BOLTS, NUTS AND WASHERS SHALL BE GALVANIZED. AT THE CONTRACTOR'S OPTION, STAINLESS STEEL BOLTS, NUTS AND WASHERS MAY BE USED AS AN ALTERNATE FOR THE 7/8'' Ø GALVANIZED BOLTS, NUTS AND WASHERS. THEY SHALL CONFORM TO OR EXCEED THE MECHANICAL REQUIREMENTS OF ASTM A307. THE USE OF THIS ALTERNATE SHALL BE APPROVED BY THE ENGINEER.

THE GUARDRAIL ANCHOR ASSEMBLY IS REQUIRED AT ALL POINTS WHERE APPROACH GUARDRAIL IS TO BE ATTACHED TO THE END OF THE PARAPET. FOR POINTS OF ATTACHMENT, SEE SKETCH.

AFTER INSTALLATION, THE EXPOSED THREAD OF THE BOLT SHALL BE BURRED WITH A SHARP POINTED TOOL.

THE VERTICAL REINFORCING BARS MAY BE SHIFTED SLIGHTLY IN THE END POST TO CLEAR ASSEMBLY BOLTS.

THE 1 1/4'' Ø HOLES SHALL BE FORMED OR DRILLED WITH A CORE BIT. IMPACT TOOLS WILL NOT BE PERMITTED. ANY CONCRETE DAMAGED BY THIS WORK SHALL BE REPAIRED TO THE SATISFACTION OF THE ENGINEER.

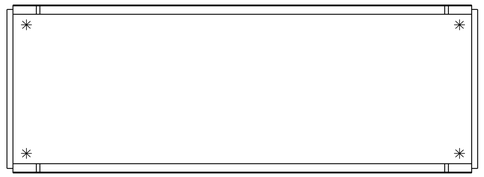

SKETCH SHOWING POINTS OF ATTACHMENT

✳ LOCATION OF GUARDRAIL ATTACHMENT

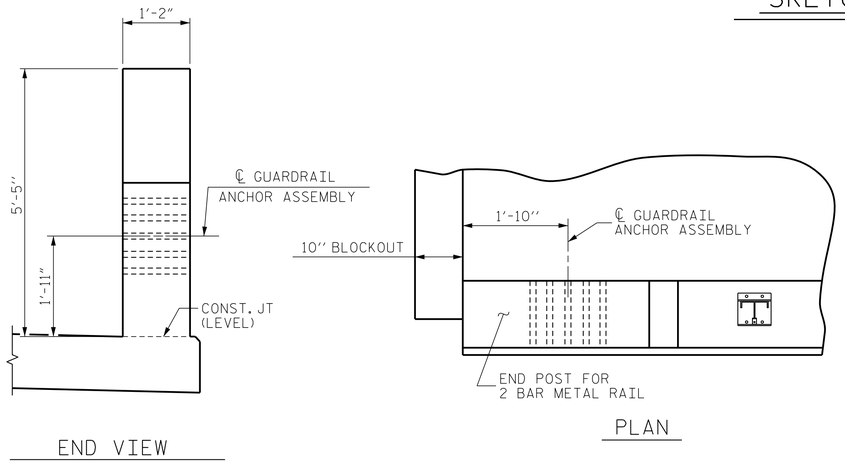

END VIEW

PLAN

LOCATION OF GUARDRAIL ANCHOR AT END POST

PROJECT NO. 17BP.1.R.58
HERTFORD COUNTY
STATION: 23+22.00 -L-

STATE OF NORTH CAROLINA
DEPARTMENT OF TRANSPORTATION
RALEIGH

SUPERSTRUCTURE

GUARDRAIL ANCHORAGE DETAILS FOR METAL RAILS

NORTH CAROLINA PROFESSIONAL SEAL 024400 ENGINEER GREGORY M. GILLAND

WETHERILL ENGINEERING
559 Jones Franklin Rd. Suite 164
Raleigh, N.C. 27606
Bus: 919 851 8077
Fax: 919 851 8107
License: F-0377
TRANSPORTATION PLANNING/DESIGN - BRIDGE/STRUCTURE DESIGN
CIVIL/SITE DESIGN - GIS/GPS - CONSTRUCTION OBSERVATION

REVISIONS						SHEET NO.
NO.	BY:	DATE:	NO.	BY:	DATE:	S-22
1			3			TOTAL SHEETS
2			4			32

DRAWN BY : J.M. BRITT DATE : 4-29-14
CHECKED BY: G.M. GILLAND DATE : 5-7-14
DESIGN ENGINEER OF RECORD: G.M. GILLAND DATE : 5-7-14

P:\2013\13131.01 Hertford #33\Structures\DWG\Hertford_33_sd_GRA_WEI.dgn
7/1/2014 1:36:28 PM

DocuSign Envelope ID: 9470C23F-75AA-488A-BF2C-36FEFAA85328

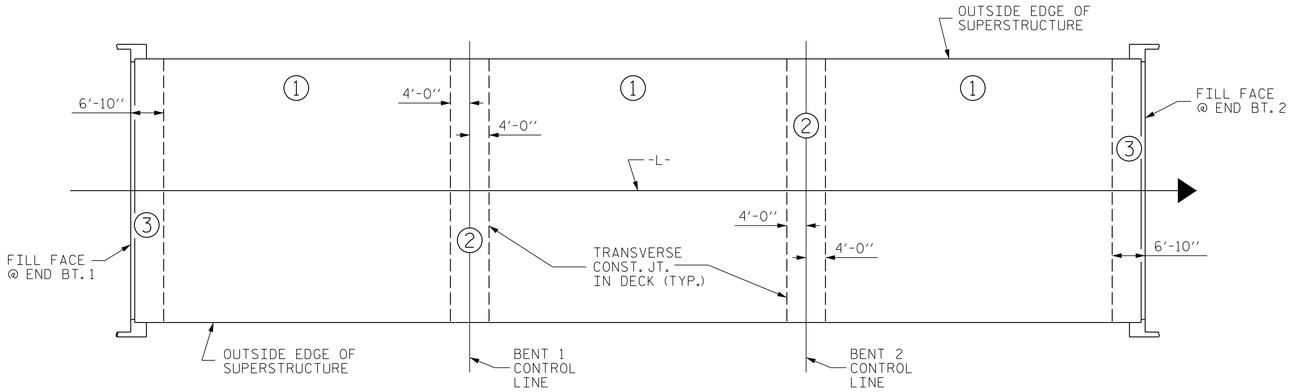

OPTIONAL DECK POUR DETAIL

POUR ② SHALL NOT BE STARTED UNTIL BOTH ADJACENT POUR ① REACH A MINIMUM OF 3,000 PSI

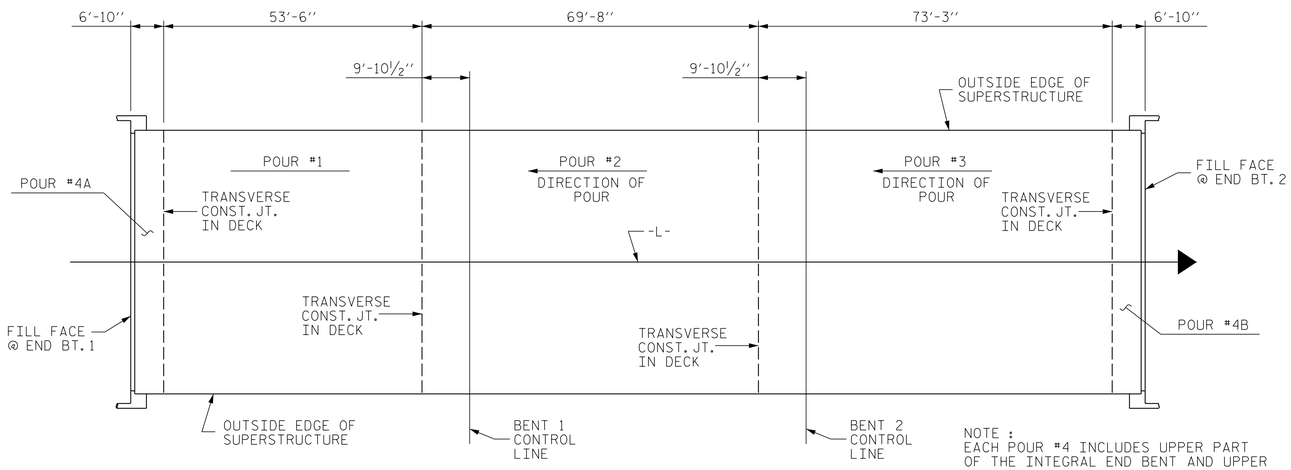

NOTE :
EACH POUR #4 INCLUDES UPPER PART OF THE INTEGRAL END BENT AND UPPER PART OF THE WINGS.

CONCRETE DECK POUR DETAIL

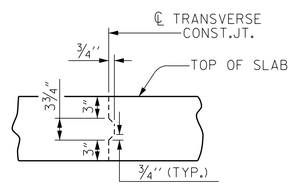

TRANSVERSE CONSTRUCTION JOINT DETAIL

NOTE: SLAB REINFORCING STEEL SHALL BE CONTINUOUS THRU JOINT

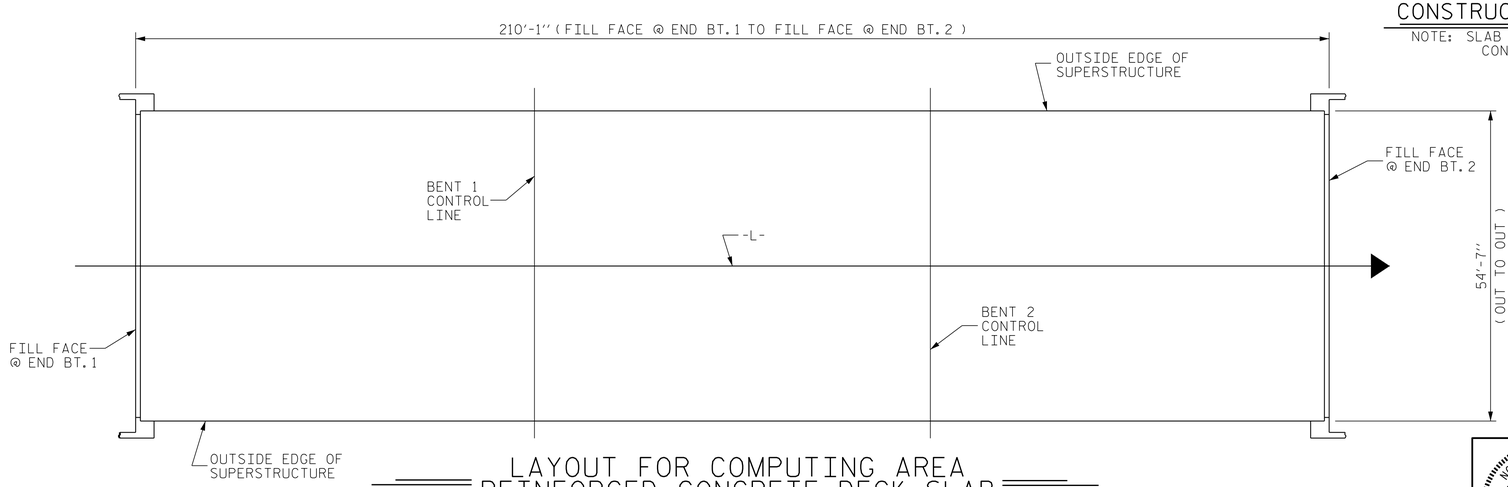

LAYOUT FOR COMPUTING AREA REINFORCED CONCRETE DECK SLAB (SQ. FT. = 11,467)

REINFORCING BAR SCHEDULE

SPAN "A-B-C"

BAR	No.	SIZE	TYPE	LENGTH	WEIGHT
✱A1	500	#5	STR	54'-3"	28291
A2	500	#5	STR	54'-3"	28291
✱B1	18	#4	STR	24'-11"	300
✱B2	142	#7	STR	13'-10"	4015
✱B3	70	#7	STR	60'-0"	8585
✱B4	72	#7	STR	21'-0"	3091
✱B5	70	#4	STR	29'-5"	1376
✱B6	35	#4	STR	13'-8"	320
B7	304	#5	STR	53'-8"	17016
H1	48	#4	STR	9'-8"	310
K1	24	#4	STR	21'-3"	341
K2	20	#4	STR	2'-8"	36
K3	4	#4	STR	5'-5"	14
K4	8	#4	STR	5'-10"	31
K5	4	#4	STR	5'-2"	14
K6	8	#4	STR	10'-3"	55
K7	16	#4	STR	11'-0"	118
K8	8	#4	STR	9'-9"	52
K9	20	#4	STR	24'-10"	332
K10	16	#4	STR	10'-3"	110
K11	32	#4	STR	11'-0"	235
K12	16	#4	STR	10'-7"	113
K13	16	#4	STR	8'-7"	92
✱S1	96	#4	1	9'-7"	615
✱S2	96	#4	1	11'-11"	764
S3	336	#4	4	2'-9"	617
U1	100	#4	2	9'-1"	607
U2	12	#4	2	11'-9"	94
U3	72	#4	3	13'-6"	649
U4	16	#4	3	11'-6"	123

REINFORCING STEEL 49,250 LBS.

✱ EPOXY COATED REINFORCING STEEL 47,357 LBS.

✱ THESE BARS ARE EPOXY COATED

BAR TYPES

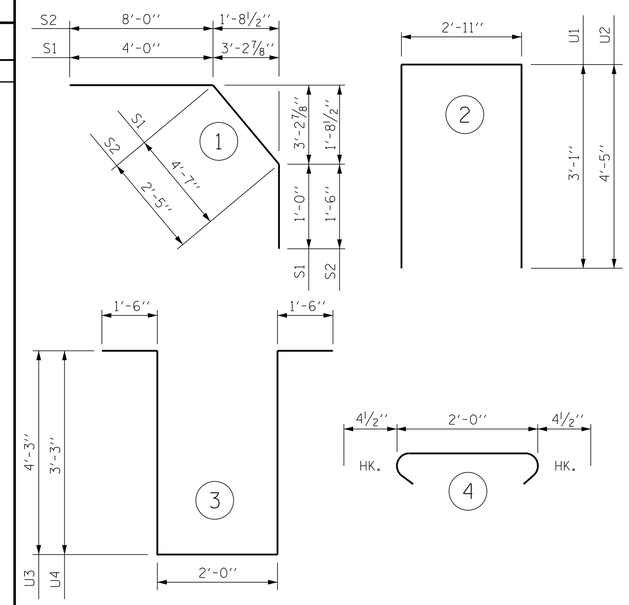

ALL BAR DIMENSIONS ARE OUT TO OUT

SUPERSTRUCTURE BILL OF MATERIAL

	CLASS AA CONCRETE	REINFORCING STEEL	EPOXY COATED REINFORCING STEEL
	(CU. YDS.)	(LBS.)	(LBS.)
TOTALS ✱✱	478.9	49,250	47,357

✱✱ QUANTITIES FOR PARAPET ARE NOT INCLUDED

CLASS AA CONCRETE BREAKDOWN

POUR #1	99.2	CY
POUR #2	144.9	CY
POUR #3	151.6	CY
POUR #4A	41.6	CY
POUR #4B	41.6	CY
CLASS AA CONCRETE BREAKDOWN TOTAL	478.9	CY

GROOVING BRIDGE FLOORS

APPROACH SLABS	1,426	SQ.FT.
BRIDGE DECK	10,192	SQ.FT.
TOTAL	11,618	SQ.FT.

SUPERSTRUCTURE REINFORCING STEEL LENGTHS ARE BASED ON THE FOLLOWING MINIMUM SPLICE LENGTHS

BAR SIZE	SUPERSTRUCTURE EXCEPT APPROACH SLABS, PARAPET, AND BARRIER RAIL		APPROACH SLABS		PARAPET AND BARRIER RAIL
	EPOXY COATED	UNCOATED	EPOXY COATED	UNCOATED	
#4	2'-0"	1'-9"	2'-0"	1'-9"	2'-9"
#5	2'-6"	2'-2"	2'-6"	2'-2"	3'-5"
#6	3'-0"	2'-7"	3'-10"	2'-7"	4'-4"
#7	5'-3"	3'-6"			
#8	6'-10"	4'-7"			

PROJECT NO. 17BP.1.R.58
HERTFORD COUNTY
STATION: 23+22.00 -L-

STATE OF NORTH CAROLINA
DEPARTMENT OF TRANSPORTATION
RALEIGH

SUPERSTRUCTURE
BILL OF MATERIAL

NORTH CAROLINA PROFESSIONAL SEAL 047400 ENGINEER GREGORY M. GILLAND
DocuSigned by:

WETHERILL ENGINEERING
559 Jones Franklin Rd. Suite 164
Raleigh, N.C. 27606
Bus: 919 851 8077
Fax: 919 851 8107
License: F-0377
TRANSPORTATION PLANNING/DESIGN - BRIDGE/STRUCTURE DESIGN
CIVIL/SITE DESIGN - GIS/GPS - CONSTRUCTION OBSERVATION

REVISIONS							SHEET NO.
NO.	BY:	DATE:	NO.	BY:	DATE:		S-23
1			3				TOTAL SHEETS
2			4				32

DRAWN BY : J.M. BRITT DATE : 4-30-14
CHECKED BY: G.M. GILLAND DATE : 5-6-14
DESIGN ENGINEER OF RECORD: G.M. GILLAND DATE : 5-6-14

P:\2013\131101 Hertford #33\Structures\DWG\Hertford_33_sd_BM_WEI.dgn
7/1/2014 2:10:02 PM

DocuSign Envelope ID: 9470C23F-75AA-488A-BF2C-36FEFAA85328

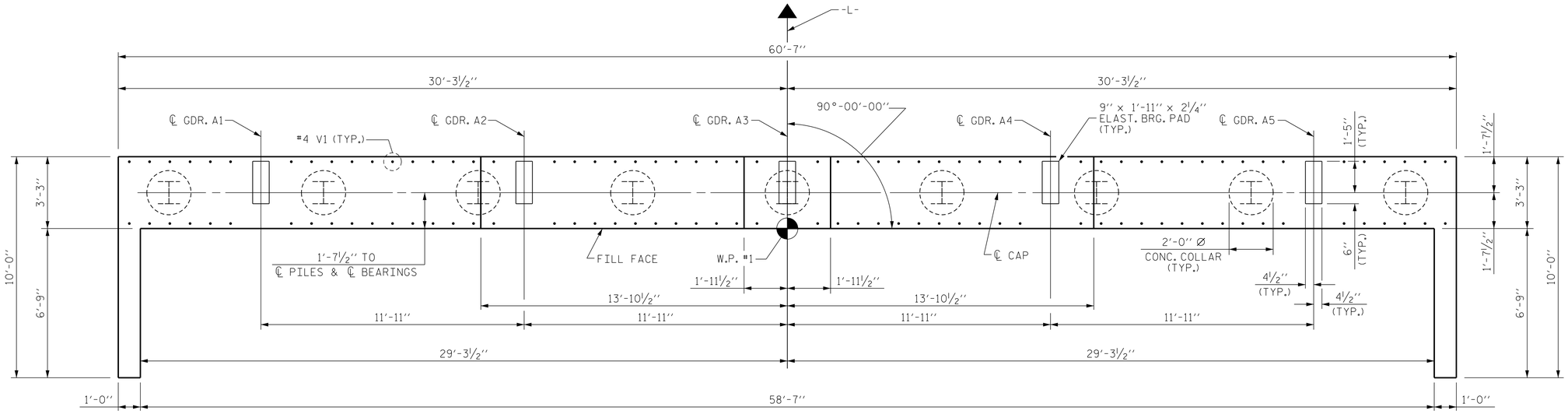

PLAN

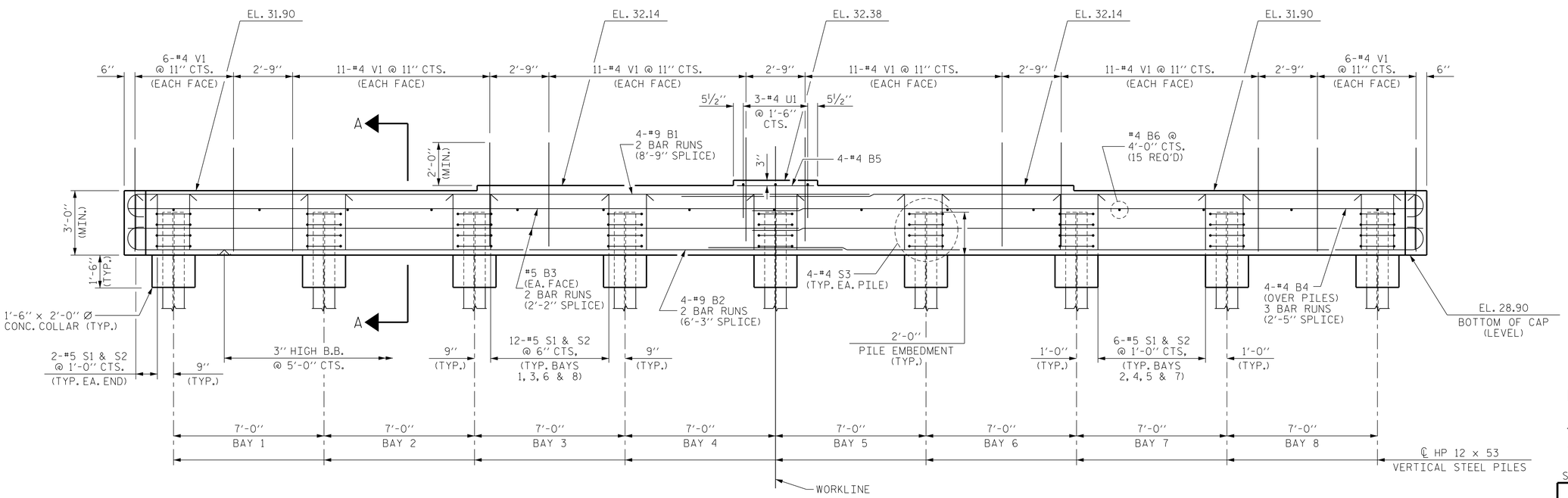

ELEVATION

NOTES :

SEE SUPERSTRUCTURE PLAN SHEETS FOR UPPER PART OF THE INTEGRAL END BENT DETAILS.

CONCRETE IN THE UPPER PORTION OF THE WINGS SHALL BE POURED WITH THE SUPERSTRUCTURE. FOR DETAILS AND REINFORCING STEEL, SEE SUPERSTRUCTURE DETAILS.

FOR SECTION A-A, SEE SHEET 2 OF 2.

INSTALL THE 4" DIA. DRAIN PIPE THROUGH THE WING WALL AS REQUIRED FOR REINFORCED BRIDGE APPROACH FILLS. SEE THE ROADWAY PLANS. REINFORCING STEEL IN THE WING WALL MAY BE SHIFTED AS NECESSARY TO CLEAR THE DRAIN PIPE.

THE TOP SURFACE OF THE END BENT CAP AND WINGS, EXCEPT THE BEARING AREA, SHALL BE RAKED TO A DEPTH OF 1/4".

PROJECT NO. 17BP.1.R.58
HERTFORD COUNTY
STATION: 23+22.00 -L-

SHEET 1 OF 2

STATE OF NORTH CAROLINA
DEPARTMENT OF TRANSPORTATION
RALEIGH

SUBSTRUCTURE

INTEGRAL END BENT 1

NORTH CAROLINA PROFESSIONAL SEAL ENGINEER GREGORY M. GILLAND

WETHERILL ENGINEERING
559 Jones Franklin Rd. Suite 164
Raleigh, N.C. 27606
Bus: 919 851 8077
Fax: 919 851 8107
License: F-0377
TRANSPORTATION PLANNING/DESIGN - BRIDGE/STRUCTURE DESIGN
CIVIL/SITE DESIGN - GIS/GPS - CONSTRUCTION OBSERVATION

REVISIONS								
NO.	BY:	DATE:	NO.	BY:	DATE:			
1			3					
2			4					

SHEET NO. S-24
TOTAL SHEETS 32

DRAWN BY : J.M. BRITT DATE : 5-8-14
CHECKED BY: G.M. GILLAND DATE : 6-6-14
DESIGN ENGINEER OF RECORD: G.M. GILLAND DATE : 6-6-14

P:\2013\1313101 Hertford #33\Structures\DWG\Hertford_33_sd_EB1_WE1.dgn
7/1/2014 1:39:09 PM

DocuSign Envelope ID: 9470C23F-75AA-488A-BF2C-36FEFAA85328

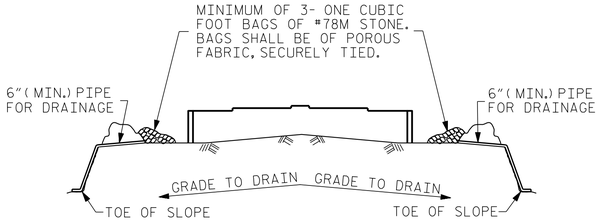

BAGGED STONE AND PIPE SHALL BE PLACED IMMEDIATELY AFTER COMPLETION OF END BENT EXCAVATION. PIPE MAY BE EITHER CONCRETE, CORRUGATED STEEL, CORRUGATED ALUMINUM ALLOY, OR CORRUGATED PLASTIC. PERFORATED PIPE WILL NOT BE ALLOWED.

BAGGED STONE SHALL REMAIN IN PLACE UNTIL THE ENGINEER DIRECTS THAT IT BE REMOVED. THE CONTRACTOR SHALL REMOVE AND DISPOSE OF SILT ACCUMULATIONS AT BAGGED STONE WHEN SO DIRECTED BY THE ENGINEER. BAGS SHALL BE REMOVED AND REPLACED WHENEVER THE ENGINEER DETERMINES THAT THEY HAVE DETERIORATED AND LOST THEIR EFFECTIVENESS.

NO SEPARATE PAYMENT WILL BE MADE FOR THIS WORK AND THE ENTIRE COST OF THIS WORK SHALL BE INCLUDED IN THE UNIT CONTRACT PRICE BID FOR THE SEVERAL PAY ITEMS.

TEMPORARY DRAINAGE AT END BENT

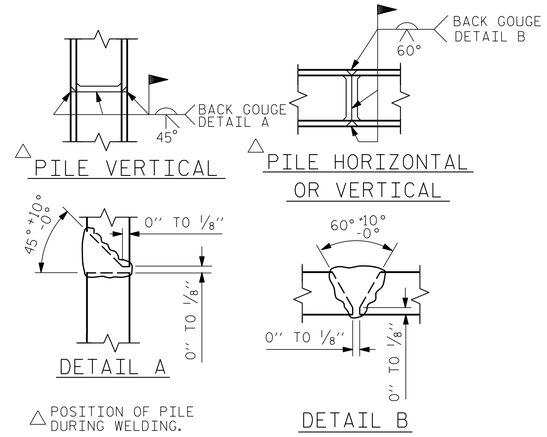

PILE SPLICE DETAIL

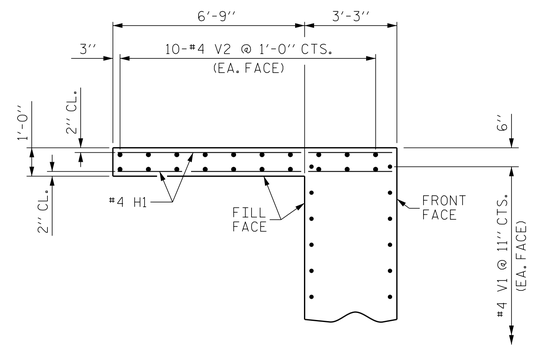

PLAN OF LEFT WING

(RIGHT WING SIMILAR)

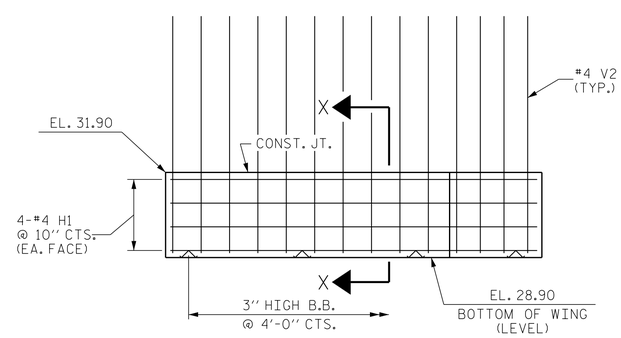

ELEVATION OF LEFT WING

(RIGHT WING SIMILAR)

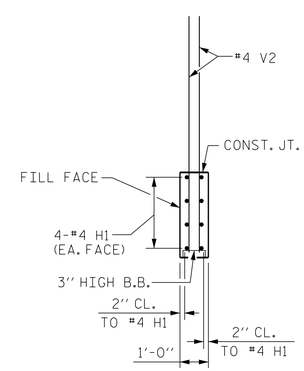

SECTION X-X

BAR TYPES

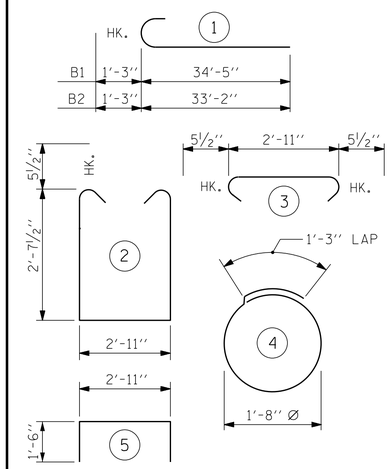

ALL BAR DIMENSIONS ARE OUT TO OUT.

BILL OF MATERIAL

END BENT 1

BAR	No.	SIZE	TYPE	LENGTH	WEIGHT
B1	8	#9	1	35'-8"	970
B2	8	#9	1	34'-5"	936
B3	8	#5	STR	31'-3"	261
B4	12	#4	STR	21'-9"	174
B5	4	#4	STR	2'-5"	6
B6	15	#4	STR	2'-11"	29
H1	16	#4	STR	9'-8"	103
S1	76	#5	2	9'-1"	720
S2	76	#5	3	3'-10"	304
S3	36	#4	4	6'-6"	156
U1	3	#4	5	5'-11"	12
V1	112	#4	STR	4'-10"	362
V2	40	#4	STR	7'-6"	200

REINFORCING STEEL	4,233 LBS.
CLASS A CONCRETE	25.9 CU. YDS.
HP 12 x 53 STEEL PILES No. 9	720 LIN. FT.
PILE REDRIVES	4 EACH

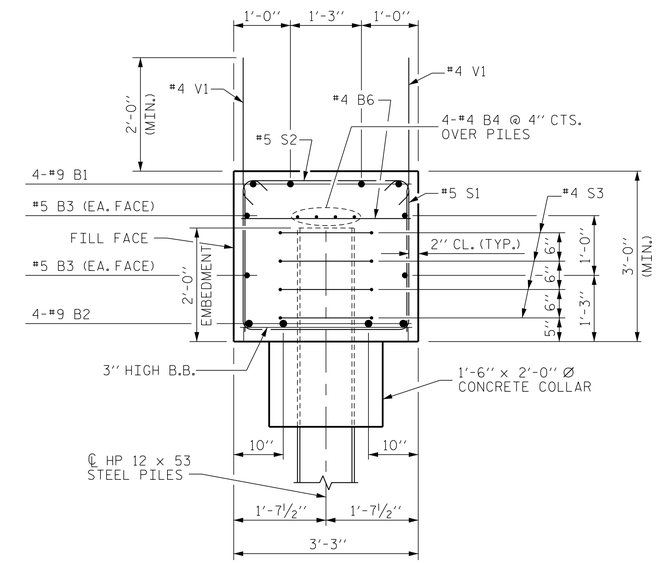

SECTION A-A

PROJECT NO. 17BP.1.R.58

HERTFORD COUNTY

STATION: 23+22.00 -L-

SHEET 2 OF 2

STATE OF NORTH CAROLINA
DEPARTMENT OF TRANSPORTATION
RALEIGH

SUBSTRUCTURE

INTEGRAL END BENT 1

NORTH CAROLINA PROFESSIONAL SEAL 047700 ENGINEER GREGORY M. GILLAND

WETHERILL ENGINEERING
559 Jones Franklin Rd. Suite 164
Raleigh, N.C. 27606
Bus: 919 851 8077
Fax: 919 851 8107
License: F-0377
TRANSPORTATION PLANNING/DESIGN - BRIDGE/STRUCTURE DESIGN
CIVIL/SITE DESIGN - GIS/GPS - CONSTRUCTION OBSERVATION

REVISIONS						SHEET NO.
NO.	BY:	DATE:	NO.	BY:	DATE:	S-25
1			3			TOTAL SHEETS
2			4			32

DRAWN BY : J.M. BRITT DATE : 5-29-14
CHECKED BY: G.M. GILLAND DATE : 6-6-14
DESIGN ENGINEER OF RECORD: G.M. GILLAND DATE : 6-6-14

P:\2013\1313101 Hertford #33\Structures\DNG\Hertford_33_sd_EB1_WE1.dgn
7/1/2014 1:44:24 PM

DocuSign Envelope ID: 9470C23F-75AA-488A-BF2C-36FEFAA85328

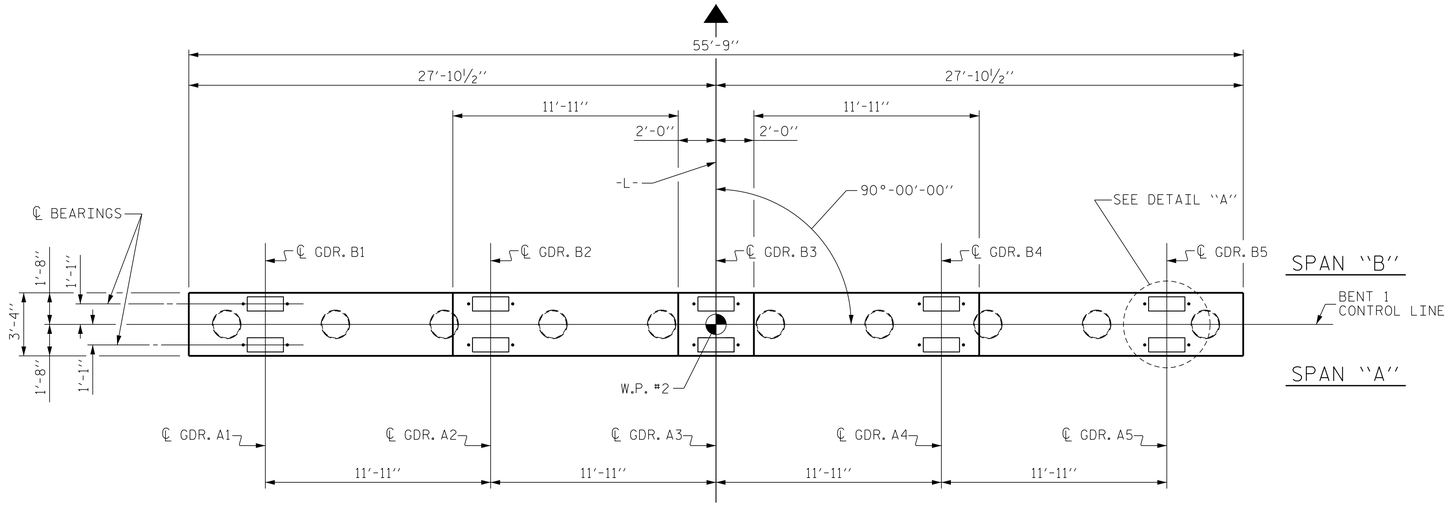

PLAN

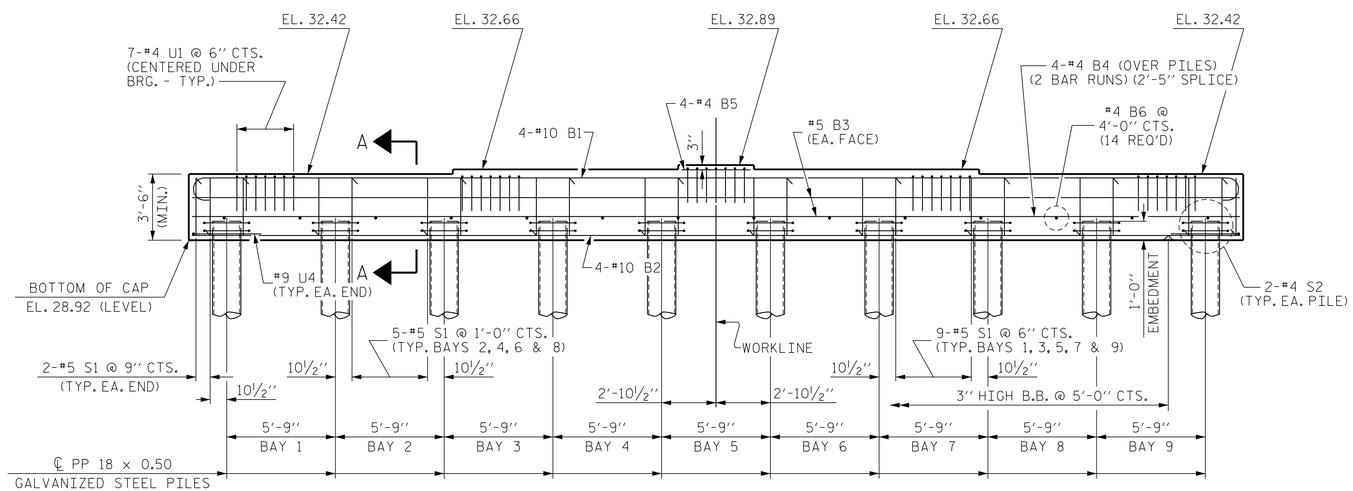

ELEVATION

NOTE :
INVERT ALTERNATE
STIRRUPS AS SHOWN

BAR TYPES

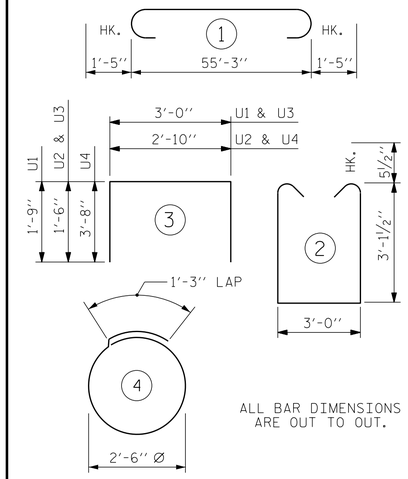

BILL OF MATERIAL

BENT 1

BAR	No.	SIZE	TYPE	LENGTH	WEIGHT
B1	4	#10	1	58'-1''	1000
B2	4	#10	STR	55'-5''	954
B3	4	#5	STR	55'-5''	231
B4	8	#4	STR	28'-11''	155
B5	4	#4	STR	3'-8''	10
B6	14	#4	STR	3'-0''	28
S1	69	#5	2	10'-2''	732
S2	20	#4	4	9'-1''	121
U1	35	#4	3	6'-6''	152
U2	4	#4	3	5'-10''	16
U3	6	#4	3	6'-0''	24
U4	2	#9	3	10'-2''	69

REINFORCING STEEL 3,492 LBS.

CLASS A CONCRETE 24.4 CU. YDS.

NOTE :
THE VOLUME OF CONCRETE DISPLACED BY THE PIPE PILES HAS BEEN DEDUCTED FROM THE TOTAL.

PP 18 x 0.50 GALVANIZED STEEL PILES
No. 10 1,000 LIN. FT.

PIPE PILE PLATES No. 10

PILE REDRIVES 5 EACH

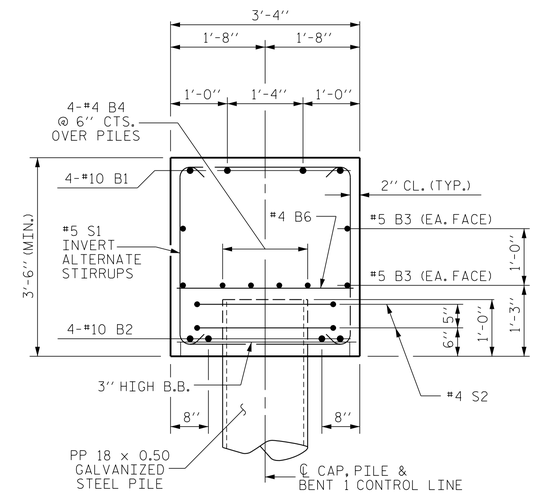

SECTION A-A

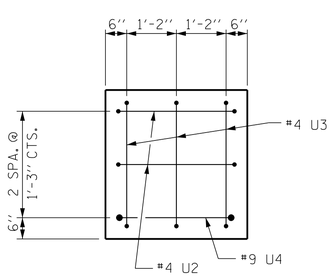

END VIEW

(TYP. EACH END)

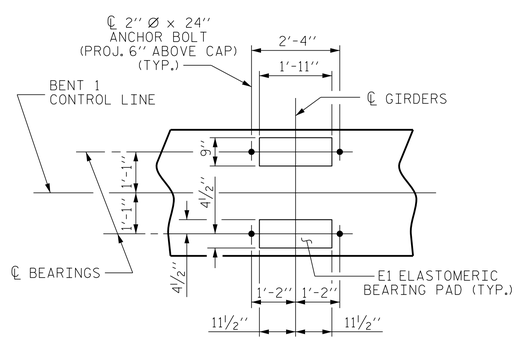

DETAIL "A"

(TYP. EACH GIRDER)

NOTES :

FOR REINFORCING STEEL IN END OF CAP, SEE "END VIEW".

STIRRUPS AND U1 BARS IN CAP MAY BE SHIFTED AS NECESSARY TO CLEAR ANCHOR BOLTS.

FOR PIPE PILES, SEE " 18" STEEL PIPE PILE" SHEET.

GALVANIZE THE TOP OF EACH INTERIOR BENT PILE TO A MINIMUM OF 26 FEET. GALVANIZE IN ACCORDANCE WITH SECTION 1076 OF THE STANDARD SPECIFICATIONS.

PROJECT NO. 17BP.1.R.58
HERTFORD COUNTY
STATION: 23+22.00 -L-

STATE OF NORTH CAROLINA
DEPARTMENT OF TRANSPORTATION
RALEIGH

SUBSTRUCTURE

BENT 1

NORTH CAROLINA PROFESSIONAL SEAL 030400 ENGINEER GREGORY M. GILLAND

WETHERILL ENGINEERING
559 Jones Franklin Rd. Suite 164
Raleigh, N.C. 27606
Bus: 919 851 8077
Fax: 919 851 8107
License: F-0377
TRANSPORTATION PLANNING/DESIGN - BRIDGE/STRUCTURE DESIGN
CIVIL/SITE DESIGN - GIS/GPS - CONSTRUCTION OBSERVATION

REVISIONS							SHEET NO.
NO.	BY:	DATE:	NO.	BY:	DATE:		S-26
1			3				TOTAL SHEETS
2			4				32

DRAWN BY : J.M. BRITT DATE : 5-7-14
CHECKED BY: G.M. GILLAND DATE : 5-30-14
DESIGN ENGINEER OF RECORD: G.M. GILLAND DATE : 5-30-14

P:\2013\131101 Hertford #33\Structures\DWG\Hertford_33_sd_BT 1&2_WE1.dgn
7/1/2014 2:11:19 PM

DocuSign Envelope ID: 9470C23F-75AA-488A-BF2C-36FEFAA85328

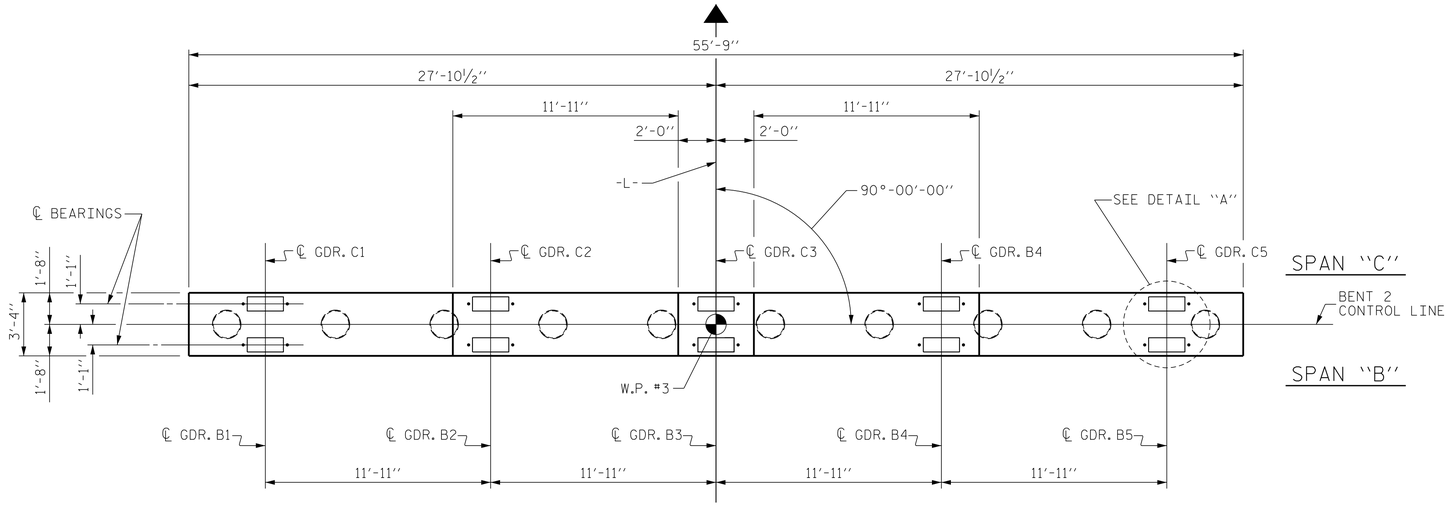

PLAN

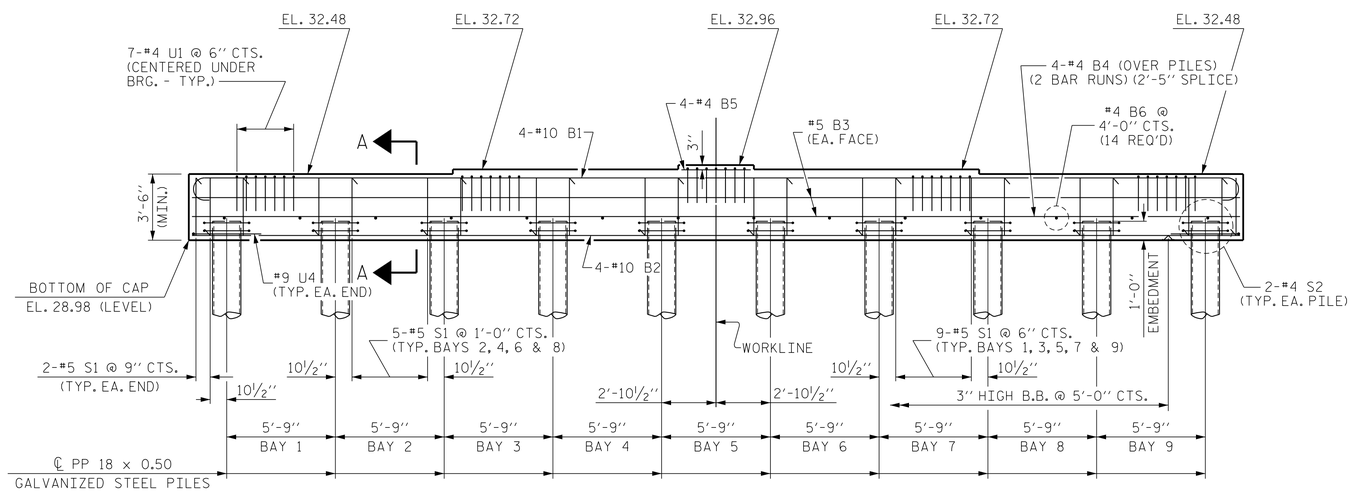

ELEVATION

NOTE :
INVERT ALTERNATE
STIRRUPS AS SHOWN

BAR TYPES

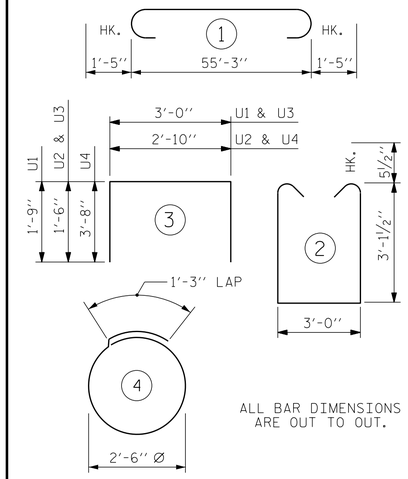

BILL OF MATERIAL

BENT 2

BAR	No.	SIZE	TYPE	LENGTH	WEIGHT
B1	4	#10	1	58'-1"	1000
B2	4	#10	STR	55'-5"	954
B3	4	#5	STR	55'-5"	231
B4	8	#4	STR	28'-11"	155
B5	4	#4	STR	3'-8"	10
B6	14	#4	STR	3'-0"	28
S1	69	#5	2	10'-2"	732
S2	20	#4	4	9'-1"	121
U1	35	#4	3	6'-6"	152
U2	4	#4	3	5'-10"	16
U3	6	#4	3	6'-0"	24
U4	2	#9	3	10'-2"	69

REINFORCING STEEL 3,492 LBS.

CLASS A CONCRETE 24.4 CU. YDS.

NOTE :
THE VOLUME OF CONCRETE DISPLACED BY THE PIPE PILES HAS BEEN DEDUCTED FROM THE TOTAL.

PP 18 x 0.50 GALVANIZED STEEL PILES
No. 10 1,100 LIN. FT.

PIPE PILE PLATES No. 10

PILE REDRIVES 5 EACH

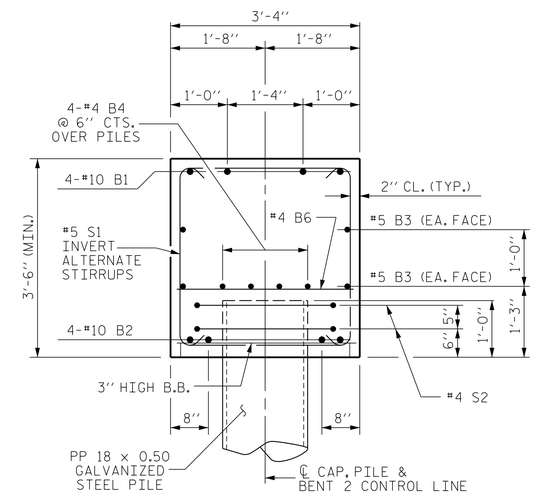

SECTION A-A

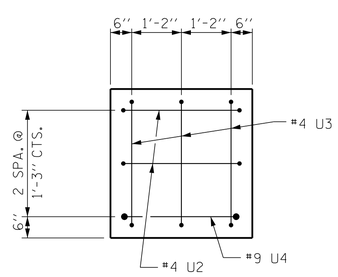

END VIEW

(TYP. EACH END)

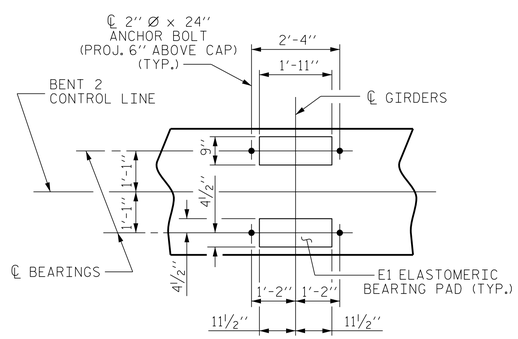

DETAIL "A"

(TYP. EACH GIRDER)

NOTES :

FOR REINFORCING STEEL IN END OF CAP, SEE "END VIEW".

STIRRUPS AND U1 BARS IN CAP MAY BE SHIFTED AS NECESSARY TO CLEAR ANCHOR BOLTS.

FOR PIPE PILES, SEE " 18" STEEL PIPE PILE" SHEET.

GALVANIZE THE TOP OF EACH INTERIOR BENT PILE TO A MINIMUM OF 30 FEET. GALVANIZE IN ACCORDANCE WITH SECTION 1076 OF THE STANDARD SPECIFICATIONS.

PROJECT NO. 17BP.1.R.58
HERTFORD COUNTY
STATION: 23+22.00 -L-

STATE OF NORTH CAROLINA
DEPARTMENT OF TRANSPORTATION
RALEIGH

SUBSTRUCTURE

BENT 2

NORTH CAROLINA PROFESSIONAL SEAL 024400 ENGINEER GREGORY M. GILLAND

WETHERILL ENGINEERING
559 Jones Franklin Rd. Suite 164
Raleigh, N.C. 27606
Bus: 919 851 8077
Fax: 919 851 8107
License: F-0377
TRANSPORTATION PLANNING/DESIGN - BRIDGE/STRUCTURE DESIGN
CIVIL/SITE DESIGN - GIS/GPS - CONSTRUCTION OBSERVATION

REVISIONS							SHEET NO.
NO.	BY:	DATE:	NO.	BY:	DATE:		S-27
1			3				TOTAL SHEETS
2			4				32

DRAWN BY : J.M. BRITT DATE : 5-7-14
CHECKED BY: G.M. GILLAND DATE : 5-30-14
DESIGN ENGINEER OF RECORD: G.M. GILLAND DATE : 5-30-14

P:\2013\131101 Hertford #33\Structures\DWG\Hertford_33_sd_BT 1&2_WE1.dgn
7/1/2014 2:11:45 PM

DocuSign Envelope ID: 9470C23F-75AA-488A-BF2C-36FEFAA85328

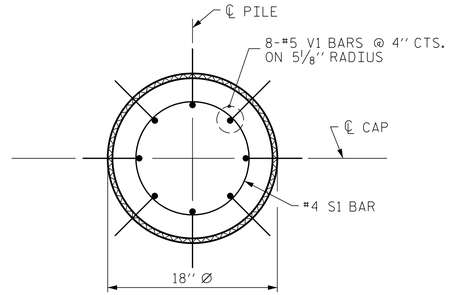

PLAN

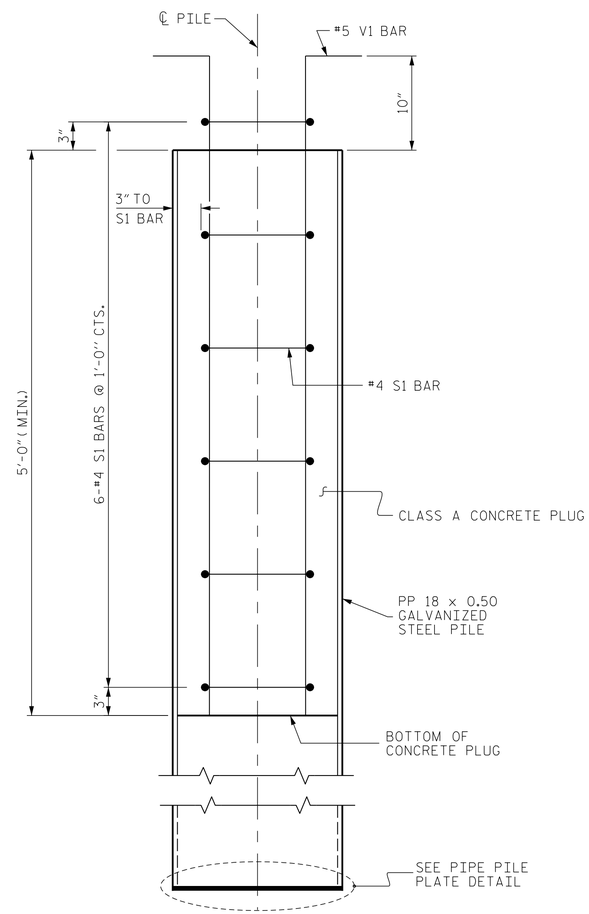

ELEVATION

PP 18 x 0.50 GALVANIZED STEEL PILE

(CLOSED END)

NOTES

PIPE PILES SHALL BE IN ACCORDANCE WITH SECTION 1084 OF THE STANDARD SPECIFICATIONS.

GALVANIZE STEEL PIPE PILES IN ACCORDANCE WITH SECTION 1076 OF THE STANDARD SPECIFICATIONS UNLESS METALLIZING IS REQUIRED. GALVANIZING OR METALLIZING PIPE PILE PLATES IS NOT REQUIRED.

PIPE PILE PLATES SHALL BE IN ACCORDANCE WITH SECTION 450 OF THE STANDARD SPECIFICATIONS.

REMOVE AND REPLACE OR REPAIR TO THE SATISFACTION OF THE ENGINEER PILES THAT ARE DAMAGED, DEFORMED OR COLLAPSED DURING INSTALLATION OR DRIVING.

PILE SPLICES SHALL BE IN ACCORDANCE WITH THE STANDARD SPECIFICATIONS AND AWS D1.1.

REMOVE ALL SOIL AND WATER FROM INSIDE THE PILES JUST PRIOR TO PLACING REINFORCING STEEL AND CONCRETE FOR THE CONCRETE PLUG.

FORM THE CONCRETE PLUG SUCH THAT THE REINFORCING STEEL OR CONCRETE DOES NOT MOVE AND THE CLEARANCE FROM THE REINFORCING STEEL TO THE INSIDE OF THE PILE IS MAINTAINED AFTER CONCRETE PLACEMENT. DO NOT PLACE CONCRETE IN THE BENT CAP UNTIL THE CONCRETE PLUG HAS ATTAINED A MINIMUM COMPRESSIVE STRENGTH OF 1500 PSI.

THE REINFORCING STEEL, CLASS A CONCRETE, AND GALVANIZING ARE CONSIDERED INCIDENTAL TO THE CONTRACT UNIT PRICE BID PER LINEAR FOOT FOR PP 18 x 0.50 GALVANIZED STEEL PILES.

BILL OF MATERIAL FOR ONE PP 18 x 0.50 GALVANIZED STEEL PILE

BAR	NO.	SIZE	TYPE	LENGTH	WEIGHT
S1	6	#4	1	4'-5''	18
V1	8	#5	2	6'-8''	56
REINFORCING STEEL =				74	lbs
CLASS A CONCRETE					
5'-0'' MINIMUM PLUG					0.3 CY

BAR TYPES

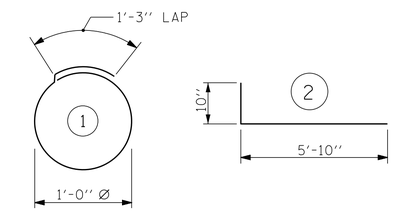

ALL BAR DIMENSIONS ARE OUT TO OUT.

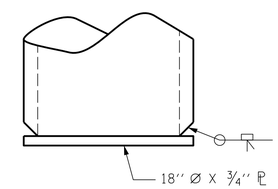

PIPE PILE PLATE DETAIL

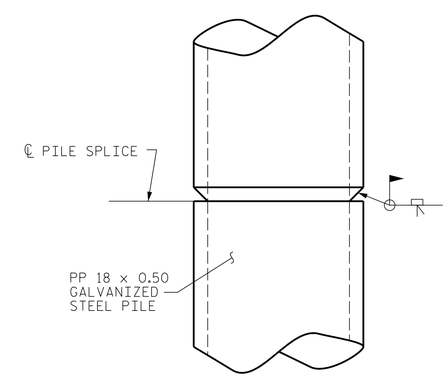

PIPE PILE SPLICE DETAIL

PROJECT NO. 17BP.1.R.58

HERTFORD COUNTY

STATION: 23+22.00 -L-

STATE OF NORTH CAROLINA
DEPARTMENT OF TRANSPORTATION
RALEIGH

SUBSTRUCTURE

18'' STEEL PIPE PILE

NORTH CAROLINA PROFESSIONAL SEAL 37400 ENGINEER GREGORY M. GILLAND

WETHERILL ENGINEERING
559 Jones Franklin Rd. Suite 164
Raleigh, N.C. 27606
Bus: 919 851 8077
Fax: 919 851 8107
License: F-0377
TRANSPORTATION PLANNING/DESIGN - BRIDGE/STRUCTURE DESIGN
CIVIL/SITE DESIGN - GIS/GPS - CONSTRUCTION OBSERVATION

REVISIONS						SHEET NO.
NO.	BY:	DATE:	NO.	BY:	DATE:	S-28
1			3			TOTAL SHEETS
2			4			32

DRAWN BY : J.M. BRITT DATE : 5-7-14
CHECKED BY: G.M. GILLAND DATE : 5-30-14
DESIGN ENGINEER OF RECORD: G.M. GILLAND DATE : 5-30-14

P:\2013\131101 Hertford #33\Structures\DWG\Hertford_33_sd_BT 1&2_WEI.dgn
7/1/2014 2:13:02 PM

DocuSign Envelope ID: 9470C23F-75AA-488A-BF2C-36FEFAA85328

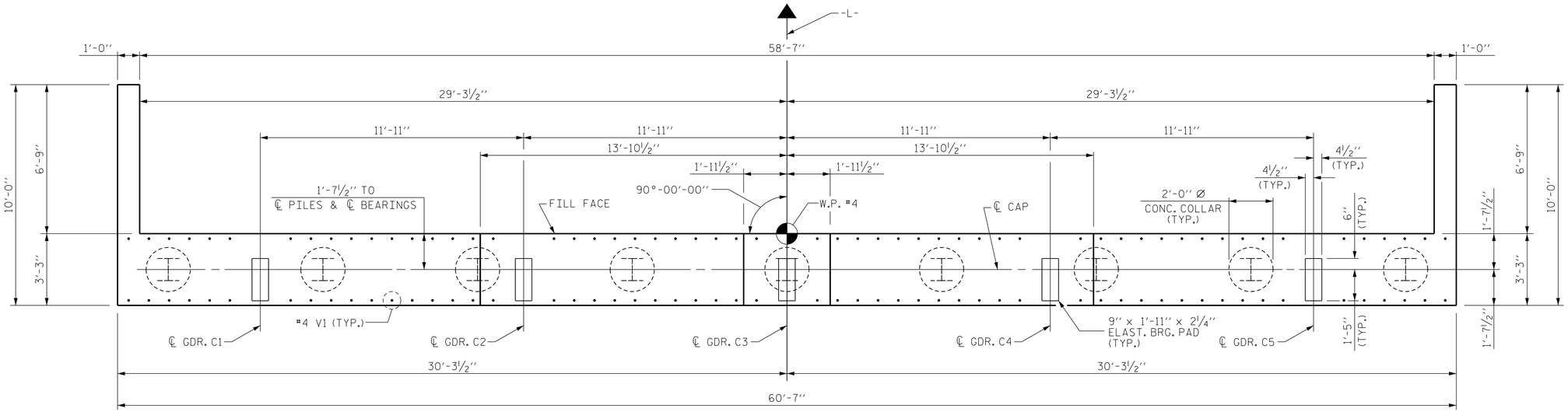

PLAN

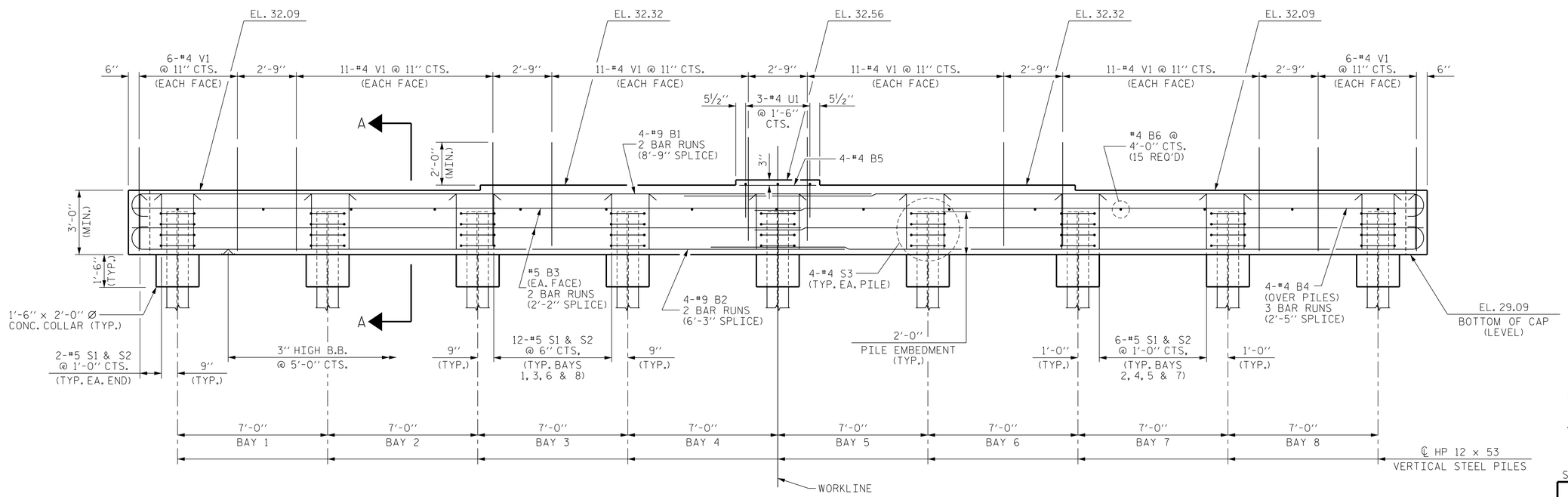

ELEVATION

NOTES :

SEE SUPERSTRUCTURE PLAN SHEETS FOR UPPER PART OF THE INTEGRAL END BENT DETAILS.

CONCRETE IN THE UPPER PORTION OF THE WINGS SHALL BE POURED WITH THE SUPERSTRUCTURE. FOR DETAILS AND REINFORCING STEEL, SEE SUPERSTRUCTURE DETAILS.

FOR SECTION A-A, SEE SHEET 2 OF 2.

INSTALL THE 4" DIA. DRAIN PIPE THROUGH THE WING WALL AS REQUIRED FOR REINFORCED BRIDGE APPROACH FILLS. SEE THE ROADWAY PLANS. REINFORCING STEEL IN THE WING WALL MAY BE SHIFTED AS NECESSARY TO CLEAR THE DRAIN PIPE.

THE TOP SURFACE OF THE END BENT CAP AND WINGS, EXCEPT THE BEARING AREA, SHALL BE RAKED TO A DEPTH OF 1/4".

PROJECT NO. 17BP.1.R.58
HERTFORD COUNTY
STATION: 23+22.00 -L-

SHEET 1 OF 2

STATE OF NORTH CAROLINA
DEPARTMENT OF TRANSPORTATION
RALEIGH

SUBSTRUCTURE

INTEGRAL END BENT 2

NORTH CAROLINA PROFESSIONAL SEAL 037400 ENGINEER GREGORY M. GILLAND

WETHERILL ENGINEERING
559 Jones Franklin Rd. Suite 164
Raleigh, N.C. 27606
Bus: 919 851 8077
Fax: 919 851 8107
License: F-0377
TRANSPORTATION PLANNING/DESIGN - BRIDGE/STRUCTURE DESIGN
CIVIL/SITE DESIGN - GIS/GPS - CONSTRUCTION OBSERVATION

REVISIONS								SHEET NO.
NO.	BY:	DATE:	NO.	BY:	DATE:			S-29
1			3					TOTAL SHEETS
2			4					32

DRAWN BY :	J.M. BRITT	DATE :	6-3-14
CHECKED BY:	G.M. GILLAND	DATE :	6-6-14
DESIGN ENGINEER OF RECORD:	G.M. GILLAND	DATE :	6-6-14

P:\2013\1313101 Hertford #33\Structures\DWG\Hertford_33_sd_EB2_WE1.dgn
7/1/2014 2:14:28 PM

DocuSign Envelope ID: 9470C23F-75AA-488A-BF2C-36FEFAA85328

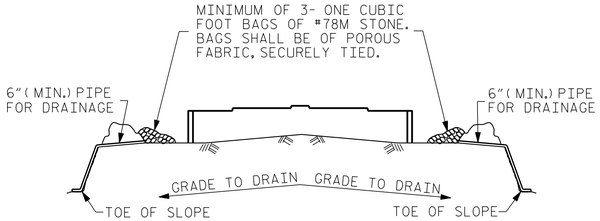

BAGGED STONE AND PIPE SHALL BE PLACED IMMEDIATELY AFTER COMPLETION OF END BENT EXCAVATION. PIPE MAY BE EITHER CONCRETE, CORRUGATED STEEL, CORRUGATED ALUMINUM ALLOY, OR CORRUGATED PLASTIC. PERFORATED PIPE WILL NOT BE ALLOWED.

BAGGED STONE SHALL REMAIN IN PLACE UNTIL THE ENGINEER DIRECTS THAT IT BE REMOVED. THE CONTRACTOR SHALL REMOVE AND DISPOSE OF SILT ACCUMULATIONS AT BAGGED STONE WHEN SO DIRECTED BY THE ENGINEER. BAGS SHALL BE REMOVED AND REPLACED WHENEVER THE ENGINEER DETERMINES THAT THEY HAVE DETERIORATED AND LOST THEIR EFFECTIVENESS.

NO SEPARATE PAYMENT WILL BE MADE FOR THIS WORK AND THE ENTIRE COST OF THIS WORK SHALL BE INCLUDED IN THE UNIT CONTRACT PRICE BID FOR THE SEVERAL PAY ITEMS.

TEMPORARY DRAINAGE AT END BENT

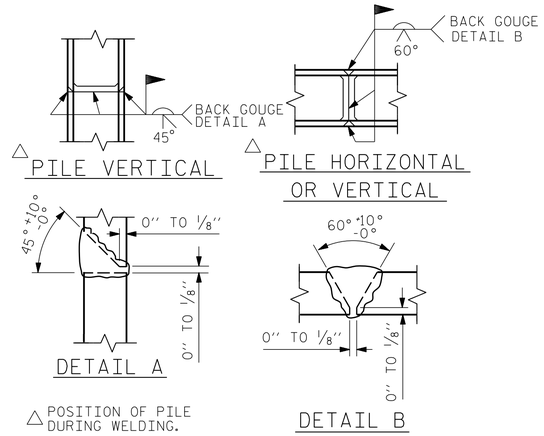

PILE SPLICE DETAIL

BAR TYPES

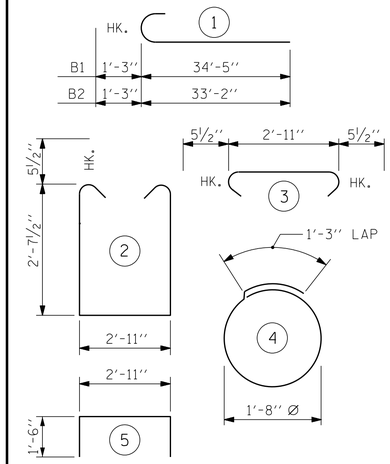

ALL BAR DIMENSIONS ARE OUT TO OUT.

BILL OF MATERIAL

END BENT 2

BAR	No.	SIZE	TYPE	LENGTH	WEIGHT
B1	8	#9	1	35'-8"	970
B2	8	#9	1	34'-5"	936
B3	8	#5	STR	31'-3"	261
B4	12	#4	STR	21'-9"	174
B5	4	#4	STR	2'-5"	6
B6	15	#4	STR	2'-11"	29
H1	16	#4	STR	9'-8"	103
S1	76	#5	2	9'-1"	720
S2	76	#5	3	3'-10"	304
S3	36	#4	4	6'-6"	156
U1	3	#4	5	5'-11"	12
V1	112	#4	STR	4'-10"	362
V2	40	#4	STR	7'-6"	200

REINFORCING STEEL	4,233 LBS.
CLASS A CONCRETE	25.9 CU. YDS.
HP 12 x 53 STEEL PILES No. 9	720 LIN. FT.
PILE REDRIVES	4 EACH

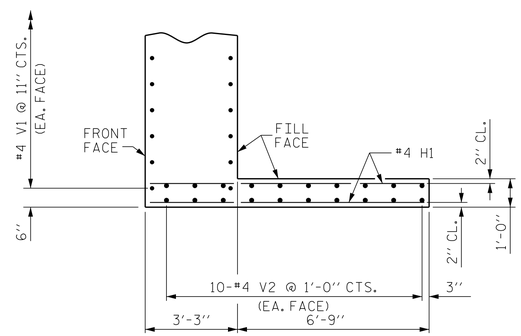

PLAN OF RIGHT WING

(LEFT WING SIMILAR)

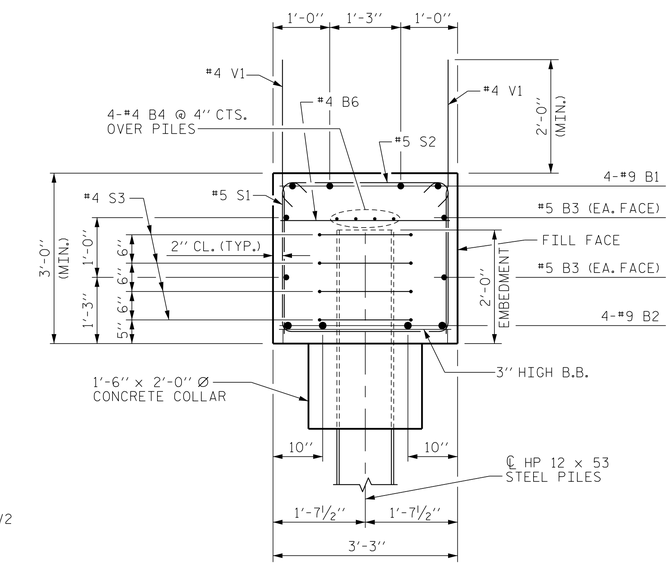

SECTION A-A

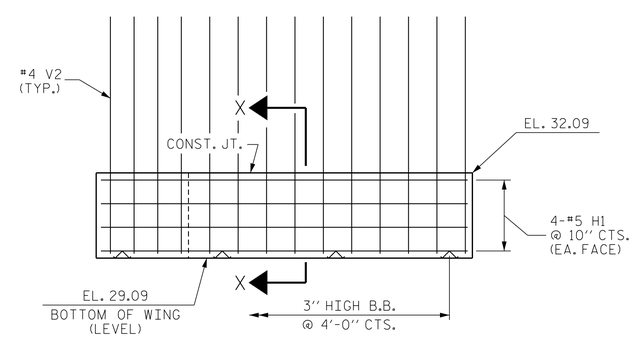

ELEVATION OF RIGHT WING

(LEFT WING SIMILAR)

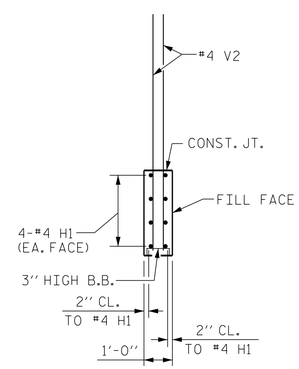

SECTION X-X

PROJECT NO. 17BP.1.R.58

HERTFORD COUNTY

STATION: 23+22.00 -L-

SHEET 2 OF 2

STATE OF NORTH CAROLINA
DEPARTMENT OF TRANSPORTATION
RALEIGH

SUBSTRUCTURE

INTEGRAL END BENT 2

NORTH CAROLINA PROFESSIONAL SEAL 040400 ENGINEER GREGORY M. GILLAND

WETHERILL ENGINEERING
559 Jones Franklin Rd. Suite 164
Raleigh, N.C. 27606
Bus: 919 851 8077
Fax: 919 851 8107
License: F-0377

TRANSPORTATION PLANNING/DESIGN - BRIDGE/STRUCTURE DESIGN
CIVIL/SITE DESIGN - GIS/GPS - CONSTRUCTION OBSERVATION

REVISIONS							
NO.	BY:	DATE:	NO.	BY:	DATE:		
1			3				
2			4				

SHEET NO. S-30

TOTAL SHEETS 32

DRAWN BY : J.M. BRITT DATE : 6-3-14
CHECKED BY: G.M. GILLAND DATE : 6-6-14
DESIGN ENGINEER OF RECORD: G.M. GILLAND DATE : 6-6-14

P:\2013\131101 Hertford #33\Structures\DWG\Hertford_33_sd_EB2_WEI.dgn
7/1/2014 2:14:54 PM

DocuSign Envelope ID: 9470C23F-75AA-488A-BF2C-36FEFAA85328

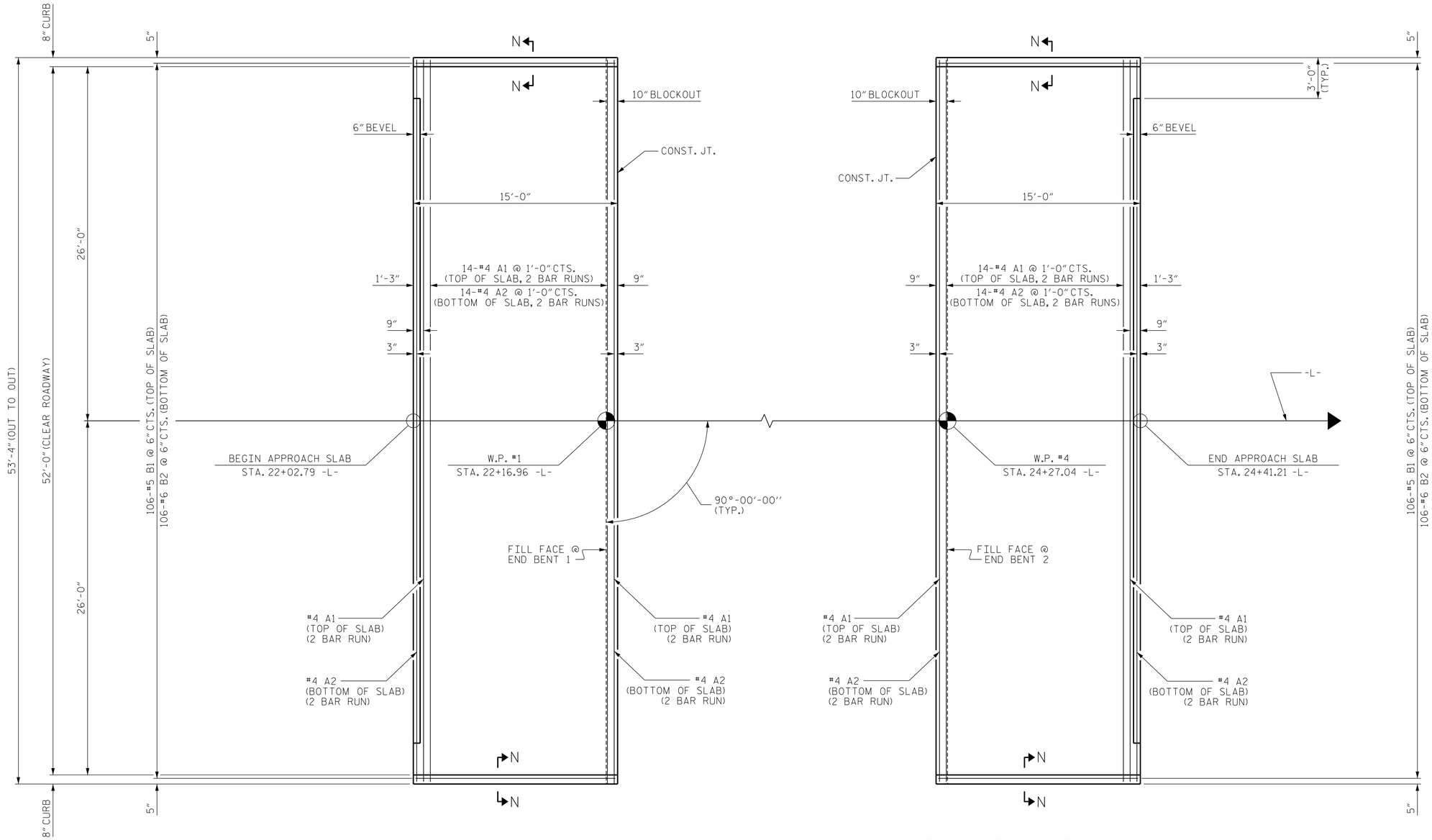

PLAN @ END BENT 1

PLAN @ END BENT 2

PLAN OF APPROACH SLABS

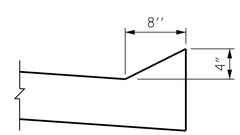

SECTION N-N

PROJECT NO. 17BP.1.R.58

HERTFORD COUNTY

STATION: 23+22.00 -L-

SHEET 1 OF 2

STATE OF NORTH CAROLINA
DEPARTMENT OF TRANSPORTATION
RALEIGH

BRIDGE
APPROACH SLAB
FOR
INTEGRAL ABUTMENT

NORTH CAROLINA PROFESSIONAL SEAL 27400 ENGINEER GREGORY M. GILLAND

WETHERILL ENGINEERING
559 Jones Franklin Rd. Suite 164
Raleigh, N.C. 27606
Bus: 919 851 8077
Fax: 919 851 8107
License: F-0377
TRANSPORTATION PLANNING/DESIGN - BRIDGE/STRUCTURE DESIGN
CIVIL/SITE DESIGN - GIS/GPS - CONSTRUCTION OBSERVATION

REVISIONS						SHEET NO.
NO.	BY:	DATE:	NO.	BY:	DATE:	S-31
1			3			TOTAL SHEETS
2			4			32

DRAWN BY : G.M. GILLAND DATE : 4-30-14
CHECKED BY: J.A. DILWORTH DATE : 5-1-14
DESIGN ENGINEER OF RECORD: G.M. GILLAND DATE : 5-1-14

P:\2013\1313.01 Hertford #33\Structures\DWG\Hertford_33_sd_AS_WE1.dgn
7/1/2014 2:17:07 PM

DocuSign Envelope ID: 9470C23F-75AA-488A-BF2C-36FEFAA85328

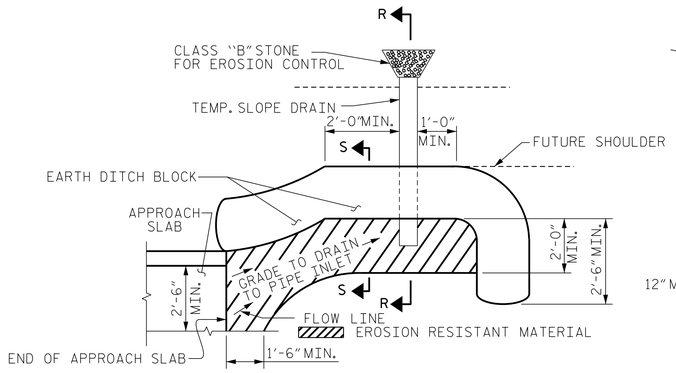

NOTE: IMMEDIATELY AFTER THE CONSTRUCTION OF THE APPROACH SLAB, THE CONTRACTOR SHALL PROVIDE TEMPORARY BERM AND SLOPE DRAIN. CONTRACTOR SHALL GRADE TO PIPE INLET AND PROVIDE EROSION RESISTANT MATERIAL AS SHOWN. THE EROSION RESISTANT MATERIAL SHALL BE EITHER 1) ASPHALT PLANT MIX, TYPE 1 OR TYPE 2, MIN. 2" DEPTH, 2) EROSION CONTROL MAT, OR 3) CONCRETE, AS DIRECTED BY THE ENGINEER. THE SLOPE DRAIN SHALL CONSIST OF A NON-PERFORATED TEMPORARY DRAINAGE PIPE, 12 INCHES IN DIAMETER.

PLAN VIEW

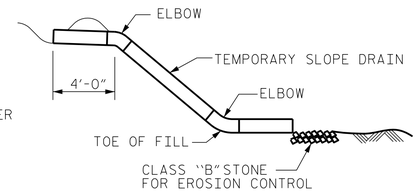

SECTION R-R

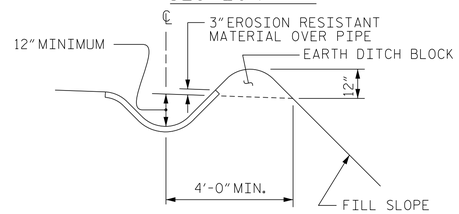

SECTION S-S

TEMPORARY BERM AND SLOPE DRAIN DETAILS

(TO BE USED WHEN SHOULDER BERM GUTTER IS REQUIRED)

SPLICE LENGTHS		
BAR SIZE	EPOXY COATED	UNCOATED
#4	2'-0"	1'-9"
#5	2'-6"	2'-2"
#6	3'-10"	2'-7"

NOTES

APPROACH SLAB SHALL NOT BE CONSTRUCTED PRIOR TO COMPLETION OF THE BRIDGE DECK.

FOR REINFORCED BRIDGE APPROACH FILL FABRIC WALL INCLUDING GEOTEXTILE, IMPERMEABLE GEOMEMBRANE, 4" Ø DRAINAGE PIPE, #78M STONE, WELDED WIRE FORM, AND SELECT MATERIAL, SEE ROADWAY PLANS.

AREA BETWEEN THE WINGWALL AND APPROACH SLAB SHALL BE GRADED TO DRAIN THE WATER AWAY FROM THE FILL FACE OF THE BRIDGE AND SHALL BE PAVED. SEE ROADWAY PLANS.

THE JOINT OPENING AT THE APPROACH SLAB/DECK INTERFACE SHALL BE SAWED NO MORE THAN 12 HOURS AFTER THE APPROACH SLAB IS CAST. THE JOINT SHALL BE CLEANED OF ALL DEBRIS BEFORE THE SEALANT IS APPLIED. THE JOINT SEALER MATERIAL SHALL CONFORM TO THE REQUIREMENTS OF SECTION 1028-3 OF THE STANDARD SPECIFICATIONS.

BILL OF MATERIAL FOR ONE APPROACH SLAB (2 REQUIRED)					
BAR	No.	SIZE	TYPE	LENGTH	WEIGHT
* A1	32	#4	STR	27'-6"	588
A2	32	#4	STR	27'-5"	586
* B1	106	#5	STR	14'-2"	1566
B2	106	#6	STR	14'-8"	2335
REINFORCING STEEL					2,921 LBS.
* EPOXY COATED REINFORCING STEEL					2,154 LBS.
CLASS AA CONCRETE					34.4 C. Y.

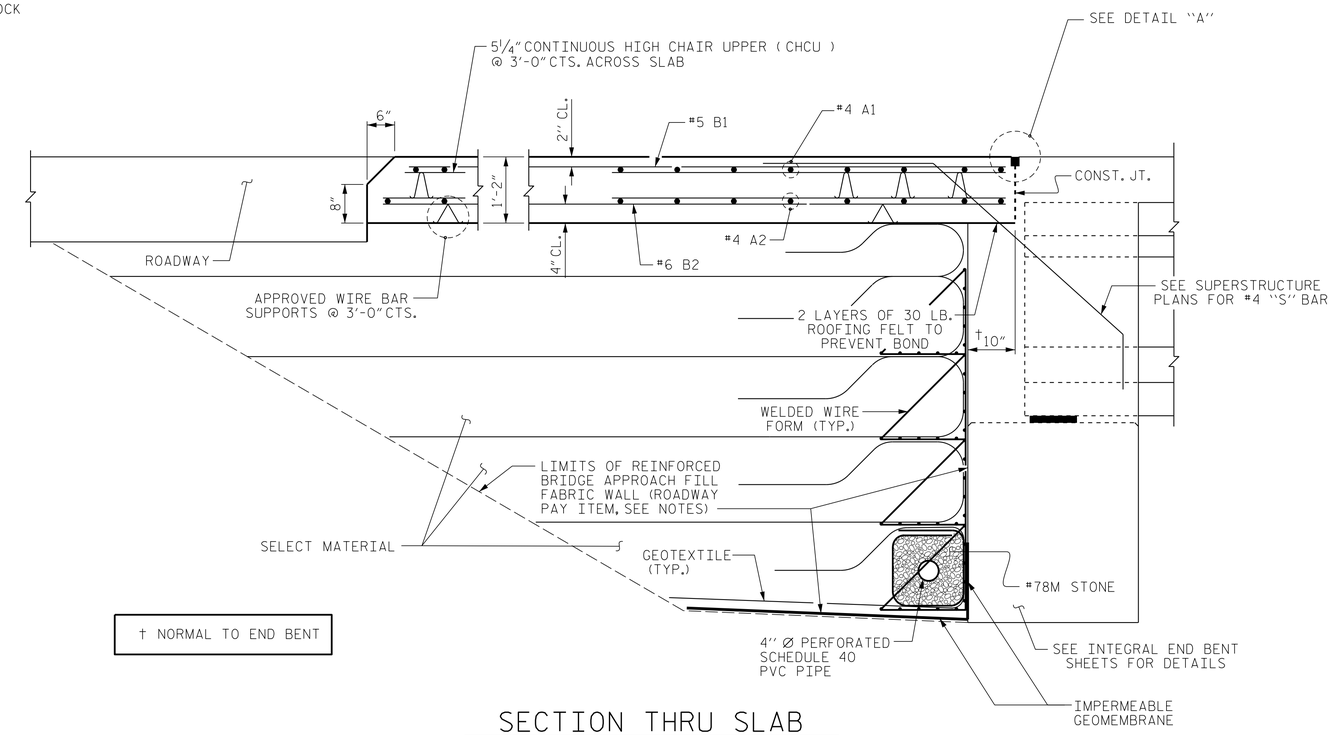

† NORMAL TO END BENT

SECTION THRU SLAB

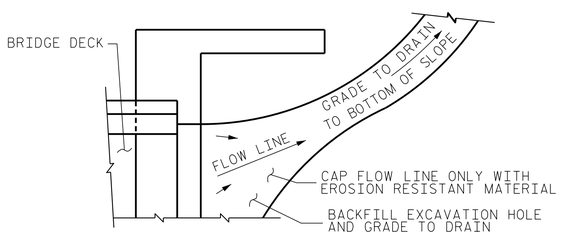

NOTE: IF THE APPROACH SLAB IS NOT CONSTRUCTED IMMEDIATELY AFTER THE BACKFILLING OF THE END BENT EXCAVATION, GRADE TO DRAIN TO THE BOTTOM OF THE SLOPE AND PROVIDE EROSION RESISTANT MATERIAL, SUCH AS FIBERGLASS ROVING OR AS DIRECTED BY THE ENGINEER TO PREVENT SOIL EROSION AND TO PROTECT THE AREA ADJACENT TO THE STRUCTURE. THE CONTRACTOR WILL BE REQUIRED TO REMOVE THESE MATERIALS PRIOR TO CONSTRUCTION OF THE APPROACH SLAB.

TEMPORARY DRAINAGE DETAIL

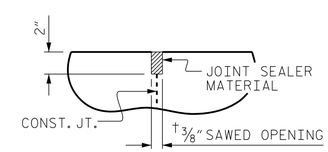

DETAIL "A"

PROJECT NO. 17BP.1.R.58

HERTFORD COUNTY

STATION: 23+22.00 -L-

SHEET 2 OF 2

STATE OF NORTH CAROLINA
DEPARTMENT OF TRANSPORTATION
RALEIGH

BRIDGE APPROACH SLAB FOR INTEGRAL ABUTMENT

NORTH CAROLINA PROFESSIONAL SEAL 37400 ENGINEER GREGORY M. GILLAND

WETHERILL ENGINEERING
559 Jones Franklin Rd. Suite 164
Raleigh, N.C. 27606
Bus: 919 851 8077
Fax: 919 851 8107
License: F-0377
TRANSPORTATION PLANNING/DESIGN - BRIDGE/STRUCTURE DESIGN
CIVIL/SITE DESIGN - GIS/GPS - CONSTRUCTION OBSERVATION

REVISIONS						SHEET NO.
NO.	BY:	DATE:	NO.	BY:	DATE:	S-32
1			3			TOTAL SHEETS
2			4			32

DRAWN BY : G.M. GILLAND DATE : 4-30-14
CHECKED BY: J.A. DILWORTH DATE : 5-1-14
DESIGN ENGINEER OF RECORD: G.M. GILLAND DATE : 5-1-14

P:\2013\1313.01 Hertford #33\Structures\DWG\Hertford_33_sd_AS_WEI.dgn
7/1/2014 2:17:36 PM

PROJECT REFERENCE NO.	SHEET NO.

NOTES:
1) DETAIL DOES NOT APPLY TO OGAFC AND ULTRA-THIN BONDED WEARING COURSE.
2) BACKFILL SHOULDER WITH APPROVED MATERIAL.
3) THE SHOULDER WEDGE DEVICE MAY BE DISENGAGED AT PAVED DRIVEWAYS AND SIDE STREETS.

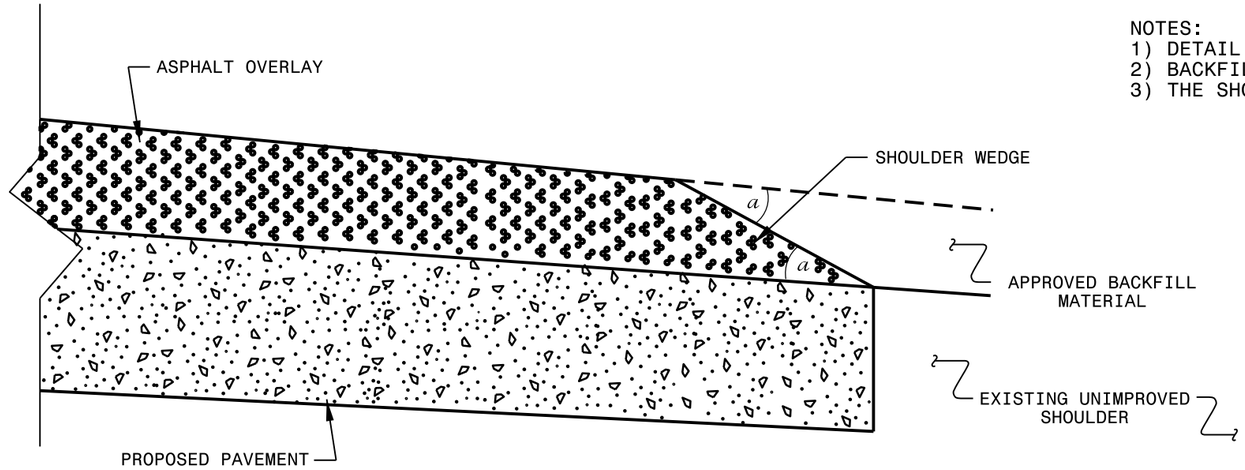

SHOULDER WEDGE DETAIL

(Resurfacing Projects w/ Widening or with Existing Paved Shoulder having no dropoffs)

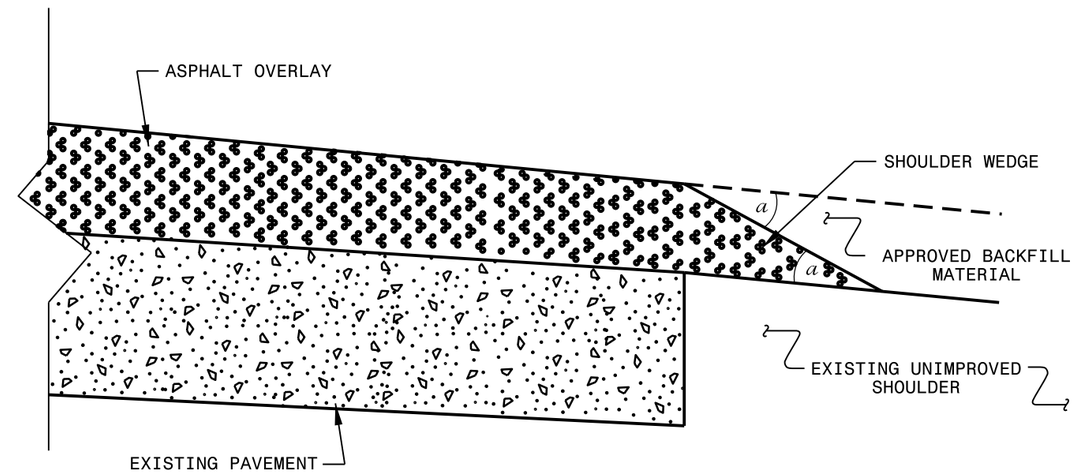

SHOULDER WEDGE DETAIL

(Resurfacing Projects w/ NO Widening)

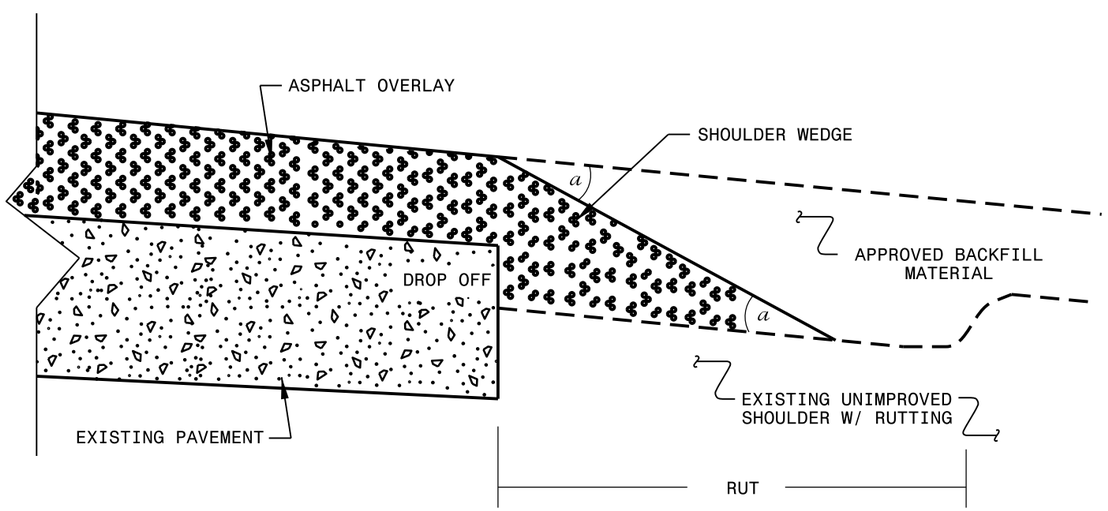

SHOULDER WEDGE DETAIL

(Resurfacing Adjacent to Rutted Shoulder)

- SHOULDER WEDGE ANGLE = 30°

CONTRACT STANDARDS AND DEVELOPMENT UNIT
Office 919-707-6950 FAX 919-250-4119

SHOULDER WEDGE DETAILS

ORIGINAL BY:	T.SPELL	DATE:	7-19-11
MODIFIED BY:		DATE:	10/16/12
CHECKED BY:		DATE:	
FILE SPEC.:	s:usr/details/stand/shoulderwedgedetail.dgn		

09-FEB-2015 9:56
s:\Roadway\Design\Paving Maps\Shoulder detail\Revised Shoulder Wedge Detail.dgn
bstaum AT DICAD27026

PROJECT REFERENCE NO.	SHEET NO.
X-XXXX	EC-2G
R/W SHEET NO.	
ROADWAY DESIGN ENGINEER	HYDRAULICS ENGINEER

COIR FIBER WATTLE WITH POLYACRYLAMIDE (PAM) DETAIL

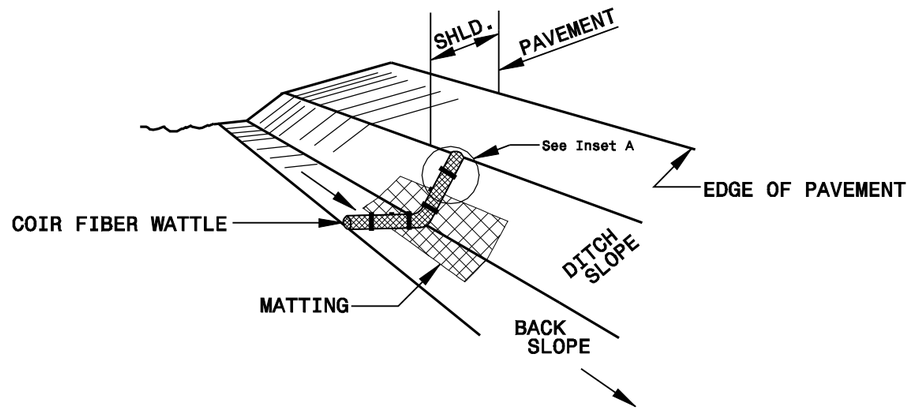

ISOMETRIC VIEW

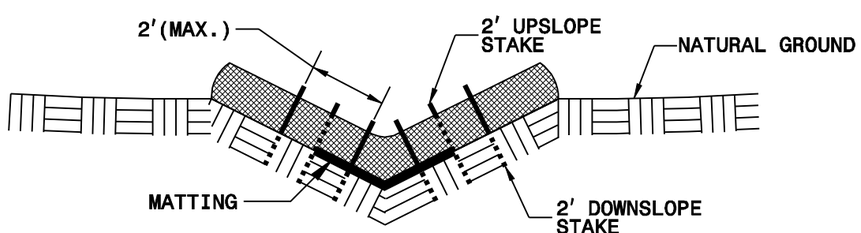

CROSS SECTION VEE DITCH

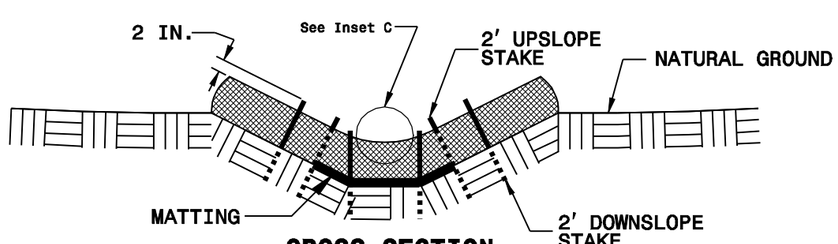

CROSS SECTION TRAPEZOIDAL DITCH

NOTES:

USE MINIMUM 12 IN. DIAMETER COIR FIBER (COCONUT FIBER) WATTLE.

USE 2 FT. WOODEN STAKES WITH A 2 IN. BY 2 IN. NOMINAL CROSS SECTION.

ONLY INSTALL WATTLE(S) TO A HEIGHT IN DITCH SO FLOW WILL NOT WASH AROUND WATTLE AND SCOUR DITCH SLOPES AND AS DIRECTED.

INSTALL A MINIMUM OF 2 UPSLOPE STAKES AND 4 DOWNSLOPE STAKES AT AN ANGLE TO WEDGE WATTLE TO BOTTOM OF DITCH.

PROVIDE STAPLES MADE OF 0.125 IN. DIAMETER STEEL WIRE FORMED INTO A U SHAPE NOT LESS THAN 12" IN LENGTH.

INSTALL STAPLES APPROXIMATELY EVERY 1 LINEAR FOOT ON BOTH SIDES OF WATTLE AND AT EACH END TO SECURE IT TO THE SOIL.

INSTALL MATTING IN ACCORDANCE WITH SECTION 1631 OF THE STANDARD SPECIFICATIONS.

PRIOR TO POLYACRYLAMIDE (PAM) APPLICATION, OBTAIN A SOIL SAMPLE FROM PROJECT LOCATION, AND FROM OFFSITE MATERIAL, AND ANALYZE FOR APPROPRIATE PAM FLOCCULANT TO BE APPLIED TO EACH WATTLE.

INITIALLY APPLY 2 OUNCES OF ANIONIC OR NEUTRALLY CHARGED PAM OVER WATTLE WHERE WATER WILL FLOW AND 1 OUNCE OF PAM ON MATTING ON EACH SIDE OF WATTLE. REAPPLY PAM AFTER EVERY RAINFALL EVENT THAT IS EQUAL TO OR EXCEEDS 0.50 IN.

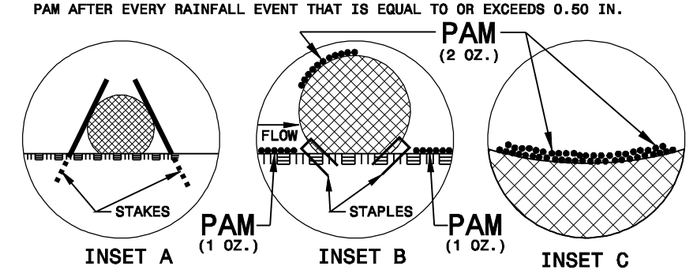

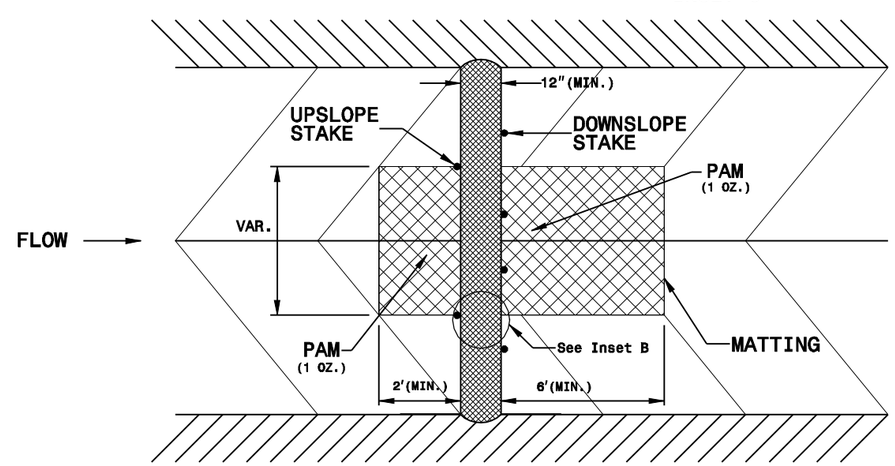

TOP VIEW

PROJECT REFERENCE NO.	SHEET NO.
X-XXXX	EC-2H
R/W SHEET NO.	
ROADWAY DESIGN ENGINEER	HYDRAULICS ENGINEER

COIR FIBER WATTLE BARRIER DETAIL

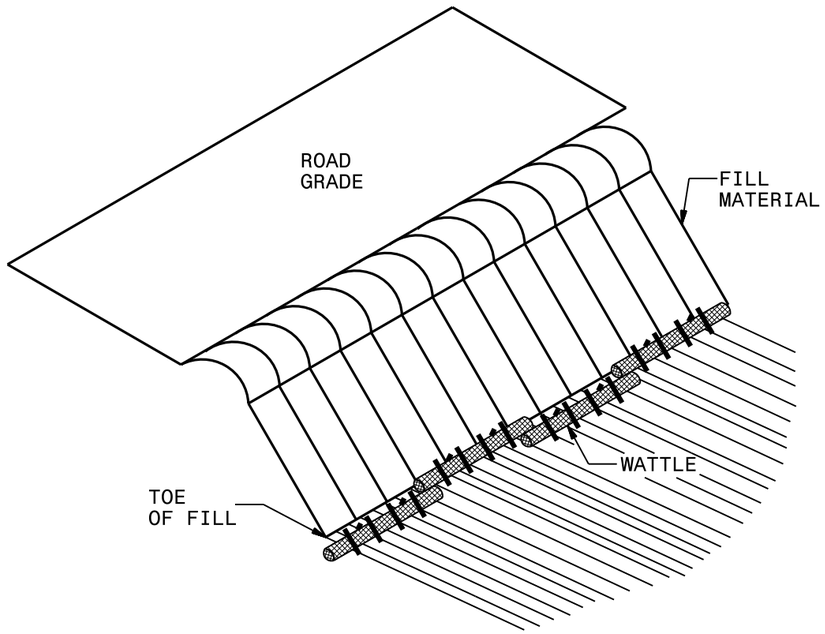

ISOMETRIC VIEW

NOTES:

USE MINIMUM 18 IN. NOMINAL DIAMETER COIR FIBER (COCONUT) WATTLE AND LENGTH OF 10 FT.

EXCAVATE A 2 TO 3 INCH TRENCH FOR WATTLE TO BE PLACED.

DO NOT PLACE WATTLES ON TOE OF SLOPE.

USE 2 FT. WOODEN STAKES WITH A 2 IN. BY 2 IN. NOMINAL CROSS SECTION.

INSTALL A MINIMUM OF 2 UPSLOPE STAKES AND 4 DOWNSLOPE STAKES AT AN ANGLE TO WEDGE WATTLE TO GROUND.

PROVIDE STAPLES MADE OF 0.125 IN. DIAMETER STEEL WIRE FORMED INTO A U SHAPE NOT LESS THAN 12″ IN LENGTH.

INSTALL STAPLES APPROXIMATELY EVERY 1 LINEAR FOOT ON BOTH SIDES OF WATTLE AND AT EACH END TO SECURE IT TO THE SOIL.

FOR BREAKS ALONG LARGE SLOPES, USE MAXIMUM SPACING OF 25 FT.

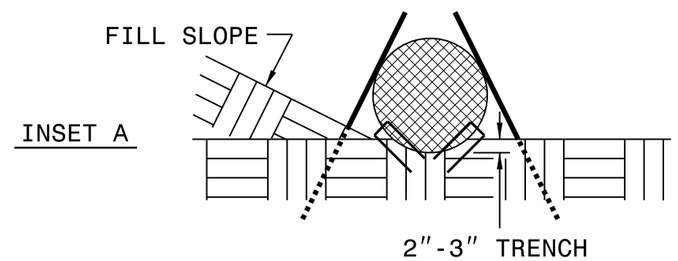

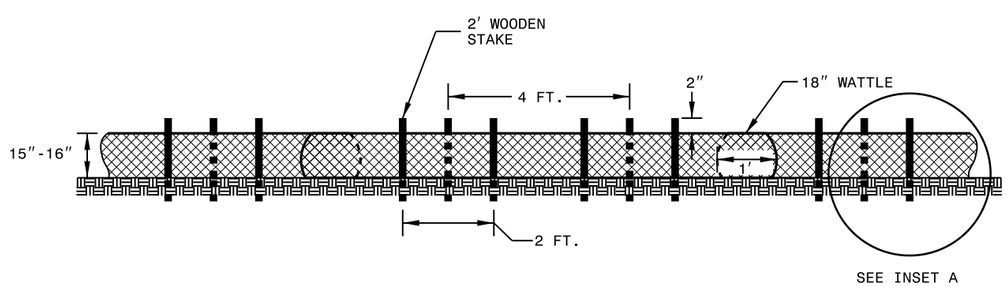

FRONT VIEW

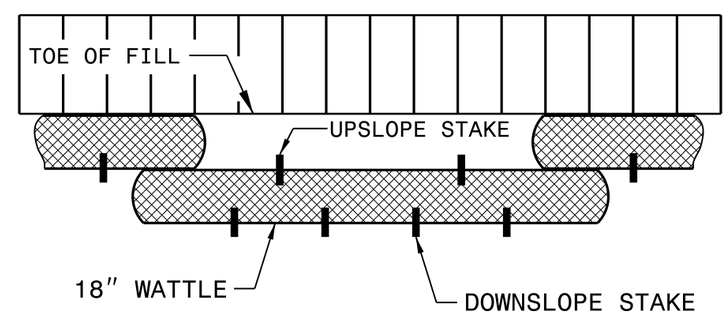

TOP VIEW

PROJECT REFERENCE NO.	SHEET NO.
X-XXXX	EC-2G
R/W SHEET NO.	
ROADWAY DESIGN ENGINEER	HYDRAULICS ENGINEER

SILT FENCE COIR FIBER WATTLE BREAK DETAIL

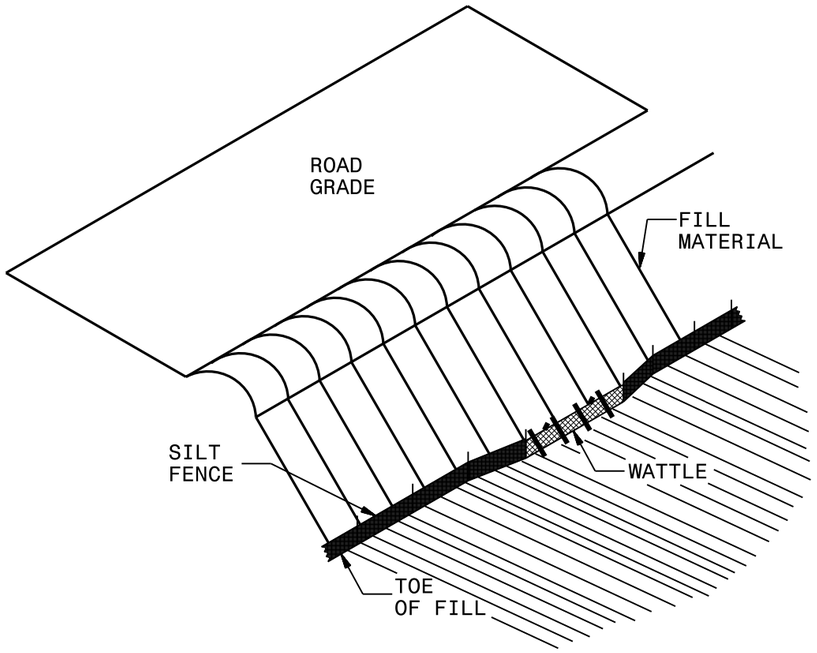

ISOMETRIC VIEW

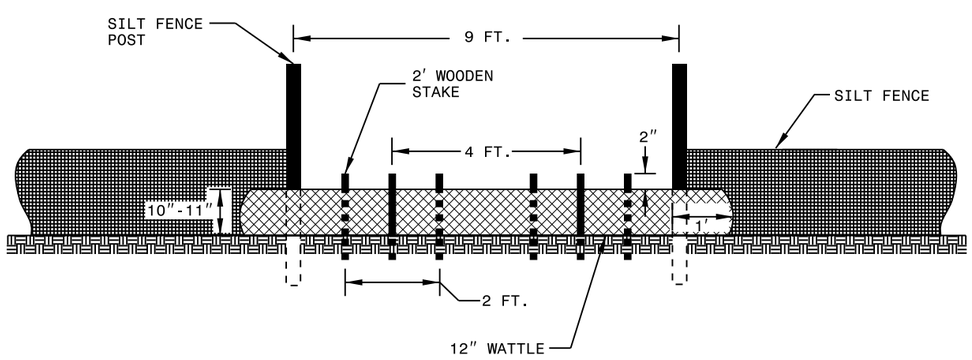

VIEW FROM SLOPE

NOTES:

USE MINIMUM 12 IN. DIAMETER COIR FIBER (COCONUT FIBER) WATTLE AND LENGTH OF 10 FT.

EXCAVATE A 1 TO 2 INCH TRENCH FOR WATTLE TO BE PLACED.

DO NOT PLACE WATTLE ON TOE OF SLOPE.

USE 2 FT. WOODEN STAKES WITH A 2 IN. BY 2 IN. NOMINAL CROSS SECTION.

INSTALL A MINIMUM OF 2 UPSLOPE STAKES AND 4 DOWNSLOPE STAKES AT AN ANGLE TO WEDGE WATTLE TO GROUND.

PROVIDE STAPLES MADE OF 0.125 IN. DIAMETER STEEL WIRE FORMED INTO A U SHAPE NOT LESS THAN 12" IN LENGTH.

INSTALL STAPLES APPROXIMATELY EVERY 1 LINEAR FOOT ON BOTH SIDES OF WATTLE AND AT EACH END TO SECURE IT TO THE SOIL.

WATTLE INSTALLATION CAN BE ON OUTSIDE OF THE SILT FENCE AS DIRECTED.

INSTALL TEMPORARY SILT FENCE IN ACCORDANCE WITH SECTION 1605 OF THE STANDARD SPECIFICATIONS.

INSET A

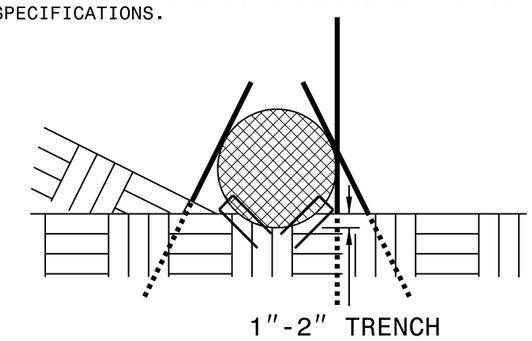

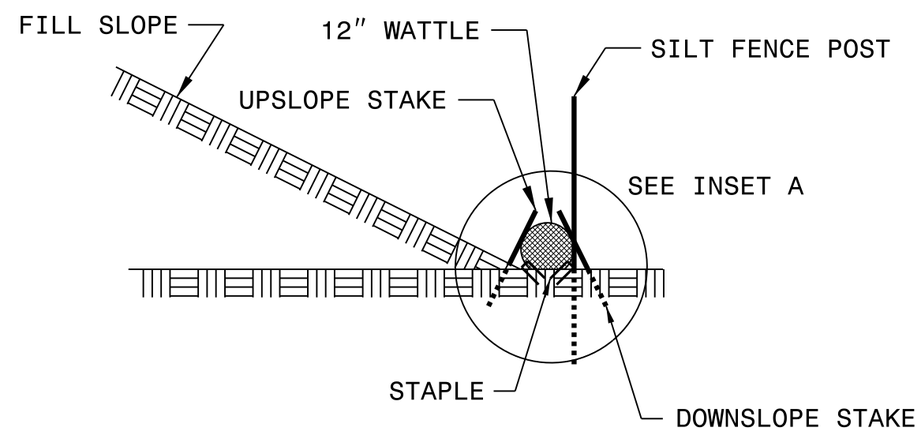

SIDE VIEW