WBS # 38377.3.1

CONTRACT #

EXISTING BRIDGE No. 35
12'-2" CLEAR ROADWAY
SPANS: 1 @ 21'-0", 1 @ 19'-6"
TIMBER FLOOR ON TIMBER JOISTS
END BENTS & INT. BENT-
TIMBER CAPS ON TIMBER PILES
TIMBER CRUTCH BENTS

TBM: BM#11
RR SPIKE IN 10" MAPLE
37.30' RIGHT OF -L- STA. 13+19.87
ELEV. 2.10

MICHEAL E. OVERTON, JR
DB 300 PG 965
PB 04 PG 53

UNNAMED TRIBUTARY TO EDENTON BAY

72'-3 5/6" TOTAL LENGTH
FILL FACE TO FILL FACE
ALONG ℄ SURVEY -L-

MARINE GRADE SHEET PILES WALL NO. 3

STA. 13+25.16 (PC)

END PAVEMENT
STA. 13+75.00 -L-

BEGIN PAVEMENT
STA. 11+10.00 -L-

BEGIN APPROACH SLAB
STA. 11+65.37 -L-

WOODS

GR LENGTH = 68'-9"
(TYP.)

MARINE GRADE SHEET PILES WALL NO. 1

℄ BRIDGE
STA. 12+12.50 -L-

END APPROACH SLAB
STA. 12+59.63 -L-

CLASS 'B' RIP RAP
1 TON W/ 5 S.Y.
FILTER FABRIC

SLOPE STAKE
LINE (TYP.)

CAPE COLONY ASSOC.
DB 233 PG 721

EXISTING R/W

WLB

+60

+60

EXISTING BRIDGE #35 (REMOVE)

15" RCP

TBDI

15" RCP

TO SR 1169

℄ SURVEY -L-
N 22°24' 13" E

SR 1170 CANAL DRIVE 18' BST

TO SR 1159

TYPE-350
G.R. ANCHOR
(TYP. U.O.N.)

EB1-B

EB2-B

TBDI

75°00'00"
(TYP.)

SHOULDER BERM
GUTTER (TYP.)

+60

+15

CLASS II RIP RAP
W/ FILTER FABRIC
(TYP.)

WOODS

EXISTING R/W

EXISTING R/W

EXISTING
WATER LINE

WORK POINT 1
STA. 11+76.34 -L-

MARINE GRADE
SHEET PILES
WALL NO. 4

WORK POINT 2
STA. 12+48.66 -L-

ROBERT V. MAKAR, et ux
DB 234 PG 224
PB 05 PG 18

MARINE GRADE
SHEET PILES
WALL NO. 2

EBB

FLOOD

ROBERT ALLEN BAINES
DB 233 PG 453
PB 04 PG 53

IS F D

EXISTING UTILITIES TO BE
RELOCATED BY OTHERS.

WOODS

WOODS

PLAN
SCALE : 1" = 15'

STA. 11+10.00
ELEV. 9.36

(-)1.5913%

STA. 13+75.00
ELEV. 5.14

GRADE DATA
-L- (SR 1170)

DENOTES GEO-TECH BORE HOLE LOCATIONS.

DENOTES TYPE III GUARDRAIL CONNECTION REQ'D.
SEE "GUARDRAIL ANCHORAGE FOR VERTICAL
CONCRETE BARRIER RAIL" SHEET.

NOTE: GUARDRAIL LENGTHS AS SHOWN INCLUDE
ANCHOR UNITS.

U.O.N. - UNLESS OTHERWISE NOTED

FOR PAVEMENT LAYOUT SEE "ROADWAY DETAILS" SHEET.

RIP RAP CLASS II (2'-0" THICK)

END BENT No. 1	90 TONS
END BENT No. 2	105 TONS
TOTAL	195 TONS

FILTER FABRIC FOR DRAINAGE

END BENT No. 1	100 SQ. YARDS
END BENT No. 2	120 SQ. YARDS
TOTAL	220 SQ. YARDS

BEGIN PAVEMENT
STA. 11+10.00 -L-

STA. 11+76.34 -L-
WORK POINT 1
FILL FACE END BENT 1

STA. 11+65.37 -L-
BEGIN APPROACH SLAB

℄ STA. 12+12.50 -L-

STA. 12+48.66 -L-
WORK POINT 2
FILL FACE END BENT 2

STA. 12+59.63 -L-
END APPROACH SLAB

END PAVEMENT
STA. 13+75.00 -L-

20
10
0
-10

1 1/2 : 1 SLOPE
NORMAL TO CAP
(TYP.)

100 YEAR
HIGH WATER
ELEV. 3.7

HP 12 X 53
GALVANIZED
STEEL PILES
(TYP.)

1'-0" MIN.
BERM (TYP.)

HIGH TIDE
ELEV. 1.0
(2/16/11)

LOW TIDE
ELEV. (-)0.5
(2/16/11)

1'-6"
(TYP.)

CLASS II RIP RAP
2' THICK W/
FILTER FABRIC
(TYP.)

DENOTES UNCLASSIFIED STRUCTURE EXCAVATION

11+00 12+00 13+00 14+00

PROFILE ALONG ℄ SURVEY
SCALE : 1" = 15'

NOTES

ASSUMED LIVE LOAD = HL-93 OR ALTERNATE LOADING.

THIS BRIDGE HAS BEEN DESIGNED IN ACCORDANCE WITH THE AASHTO LRFD BRIDGE DESIGN SPECIFICATIONS.

FOR EROSION CONTROL MEASURES SEE EROSION CONTROL PLANS.

REMOVAL OF THE EXISTING BRIDGE SHALL BE PERFORMED SO AS NOT TO ALLOW DEBRIS TO FALL INTO THE WATER. THE CONTRACTOR SHALL REMOVE THE BRIDGE AND SUBMIT PLANS FOR THE DEMOLITION IN ACCORDANCE WITH ARTICLE 402-2 OF THE STANDARD SPECIFICATIONS.

THE MATERIAL SHOWN ON THIS SHEET IN THE CROSS-HATCHED AREA SHALL BE EXCAVATED FOR A DISTANCE OF 25 FT. EACH SIDE OF CENTERLINE ROADWAY AS DIRECTED BY THE ENGINEER. THIS WORK WILL BE PAID FOR AT THE CONTRACT LUMP SUM PRICE FOR UNCLASSIFIED STRUCTURE EXCAVATION.

THE SUBSTRUCTURE OF THE EXISTING BRIDGE INDICATED ON THE PLANS IS FROM THE BEST INFORMATION AVAILABLE. SINCE THIS INFORMATION IS SHOWN FOR THE CONVENIENCE OF THE CONTRACTOR, THE CONTRACTOR SHALL HAVE NO CLAIM WHATSOEVER AGAINST THE DEPARTMENT OF TRANSPORTATION FOR ANY DELAYS OR ADDITIONAL COST INCURRED BASED ON DIFFFERENCES BETWEEN THE EXISTING BRIDGE SUBSTRUCTURE SHOWN ON THE PLANS AND THE ACTUAL CONDITIONS AT THE PROJECT SITE.

THIS STRUCTURE HAS BEEN DESIGNED IN ACCORDANCE WITH HEC 18, "EVALUATING SCOUR AT BRIDGES", MAY 2001.

FOR ADDITIONAL NOTES SEE "LOCATION SKETCH & TOTAL BILL OF MATERIALS" SHEET.

HYDROGRAPHIC DATA:

DESIGN DISCHARGE -	700 CFS
FREQUENCY OF DESIGN FLOOD -	25 YEAR
DESIGN HIGH WATER ELEVATION -	3.1
DRAINAGE AREA -	0.75 SQ. MI.
BASIC DISCHARGE (Q 100) -	1000 CFS
BASIC HIGH WATER ELEVATION -	3.7

OVERTOPPING DATA:

OVERTOPPING DISCHARGE -	1500 CFS
FREQUENCY OF OVERTOPPING-	100 YEAR +
OVERTOPPING FLOOD ELEVATION -	5.14

I HEREBY CERTIFY THESE PLANS ARE THE AS-BUILT PLANS

PROJECT NO. B-4464

CHOWAN COUNTY

STATION: 12+12.50 -L-

REPLACES BRIDGE NO. 35

STATE OF NORTH CAROLINA
DEPARTMENT OF TRANSPORTATION
RALEIGH

BRIDGE ON SR 1170
OVER UNNAMED TRIBUTARY
TO EDENTON BAY
BETWEEN SR 1169 & SR 1159

24'-10" CLEAR ROADWAY - 75°SKEW

NORTH CAROLINA PROFESSIONAL SEAL 19661 ENGINEER L. KEVIN AUSTIN 11/9/11

PLANS PREPARED BY:
MULKEY
ENGINEERS & CONSULTANTS
PO Box 33127
RALEIGH, N.C. 27636
(919) 851-1911
(919) 851-8419 (FAX)
WWW.MULKEYINC.COM

REVISIONS						SHEET NO.
NO.	BY:	DATE:	NO.	BY:	DATE:	1
1			3			TOTAL SHEETS
2			4			25

DRAWN BY : W. B. ALLEN DATE : 10/10
CHECKED BY : L. K. AUSTIN DATE : 10/10

11/9/2011 10:55:53 AM R:\Structures\B-4464_SD_GD_0.dgn

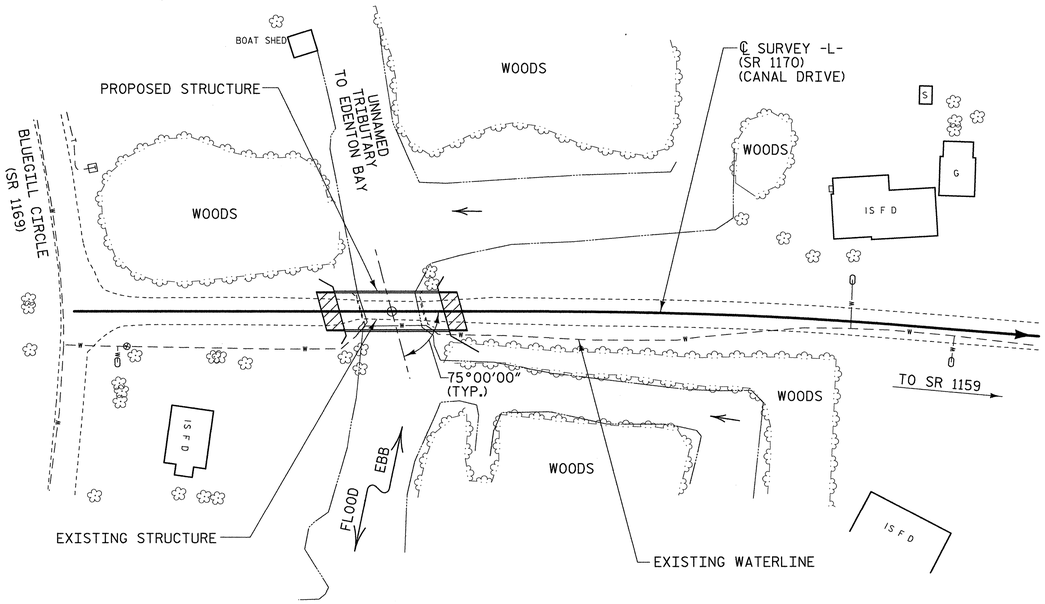

EXISTING UTILITIES TO BE RELOCATED BY OTHERS.

LOCATION SKETCH

NOTES

THE CONTRACTOR SHALL PROVIDE INDEPENDENT ASSURANCE SAMPLES OF REINFORCING STEEL AS FOLLOWS: FOR PROJECTS UP TO 400 TONS OF REINFORCING STEEL, ONE 30 INCH SAMPLE OF EACH SIZE BAR USED, AND FOR PROJECTS OVER 400 TONS OF REINFORCING STEEL, TWO 30 INCH SAMPLES OF EACH SIZE BAR USED. THE BARS FROM WHICH THE SAMPLES ARE TAKEN MUST THEN BE SPLICED WITH REPLACEMENT BARS OF THE SIZE AND LENGTH OF THE SAMPLE, PLUS A MINIMUM LAP SPLICE OF THIRTY BAR DIAMETERS. PAYMENT FOR THE SAMPLES OF REINFORCING STEEL SHALL BE CONSIDERED INCIDENTAL TO VAROIUS PAY ITEMS.

THIS STRUCTURE CONTAINS THE NECESSARY CORROSION PROTECTION FOR A CORROSIVE SITE.

CLASS AA CONCRETE SHALL BE USED IN ALL CAST-IN-PLACE END BENT CAPS AND SHALL CONTAIN CALCIUM NITRITE CORROSION INHIBITOR.

ALL BAR SUPPORTS USED IN THE BARRIER RAIL AND END BENT CAPS AND ALL INCIDENTAL REINFORCING STEEL SHALL BE EPOXY COATED IN ACCORDANCE WITH THE STANDARD SPECIFICATIONS.

FOR PILES, SEE SPECIAL PROVISIONS.

GALVANIZED STEEL PILES ARE REQUIRE IN ACCORDANCE WITH THE PILES SPECIAL PROVISIONS.

DRIVE PILES AT END BENT NO. 1 AND END BENT NO. 2 TO A REQUIRED DRIVING RESISTANCE OF 153 TONS. A RESISTANCE FACTOR OF 0.6 IS APPLIED.

FACTORED RESISTANCE FOR PILES AT END BENTS 1 AND END BENT 2 ARE 92 TONS PER PILE.

DRIVE PILES AT END BENT NO. 1 AND END BENT NO. 2 TO TIP ELEVATIONS NO HIGHER THAN -55 FEET.

AADT = 291 FOR YEAR 2010

ROADWAY APPROACH EMBANKMENT SHALL BE WIDENED AS NECESSARY FOR GUARDRAIL INSTALLATION.

FOR SUBMITTAL OF WORKING DRAWINGS, SEE SPECIAL PROVISIONS.

FOR FALSEWORK AND FORMWORK, SEE SPECIAL PROVISIONS.

FOR CRANE SAFETY, SEE SPECIAL PROVISIONS.

FOR GROUT FOR STRUCTURES, SEE SPECIAL PROVISIONS.

FOR CURING CONCRETE, SEE SPECIAL PROVISIONS.

FOR VERTICAL CONCRETE BARRIER RAIL, SEE SPECIAL PROVISIONS.

FOR MARINE GRADE SHEET PILING, SEE SPECIAL PROVISIONS.

FOR OTHER DESIGN DATA AND GENERAL NOTES, SEE SHEET SN.

NO DECK DRAINS REQUIRED.

TOTAL BILL OF MATERIAL

	REMOVAL OF EXISTING STRUCTURE	UNCLASSIFIED STRUCTURE EXCAVATION	BRIDGE APPROACH SLABS	HP 12 X 53 GALVANIZED STEEL PILES		RIP RAP CLASS II (2'-0" THICK)	FILTER FABRIC FOR DRAINAGE	CONSTRUCTION OF SUBSTRUCTURE	CONSTRUCTION OF SUPERSTRUCTURE	MARINE GRADE SHEET PILING
	LUMP SUM	LUMP SUM	LUMP SUM	NO.	LIN. FT.	TONS	SQ. YARDS	LUMP SUM	LUMP SUM	SQ. FEET
SUPERSTRUCTURE	LUMP SUM		LUMP SUM					LUMP SUM	LUMP SUM	
END BENT 1		LUMP SUM		5	325	90	100			182
END BENT 2		LUMP SUM		5	325	105	120			672
TOTAL	LUMP SUM	LUMP SUM	LUMP SUM	10	650	195	220	LUMP SUM	LUMP SUM	854

MARINE GRADE SHEET PILES

WALL NO.	STATION -L-	OFFSET	TOP ELEV.	EXISTING GROUND
1	11+66.89	20.00' LT.	6.294	5.595
	11+72.95	16.50' LT.	7.647	5.522
2	11+78.29	22.56' RT.	4.824	4.256
	11+81.79	16.50' RT.	7.647	4.634
3	12+43.21	16.50' LT.	6.541	3.990
	12+46.71	22.56' LT.	3.740	3.042
4	12+52.05	16.50' RT.	6.541	4.217
	12+70.24	27.00' RT.	1.360	0.828

NOTE:
AT THE BACKFACE OF THE MARINE GRADE SHEET PILE WALL THE ROADWAY FILL SLOPE IS TO BE GRADED TO AN ELEVATION OF 0.5 FEET BELOW THE TOP OF THE MARINE GRADE SHEET PILE WALL.

NORTH CAROLINA PROFESSIONAL ENGINEER 1966 L. KEVIN AUSTIN 11/9/11

PLANS PREPARED BY:
MULKEY
ENGINEERS & CONSULTANTS
PO Box 33127
Raleigh, N.C. 27636
(919) 851-1918
(919) 851-1918 (FAX)
www.mulkeyinc.com

PROJECT NO. B-4464
CHOWAN COUNTY
STATION: 12+12.50 -L-

REPLACES BRIDGE NO. 35

STATE OF NORTH CAROLINA
DEPARTMENT OF TRANSPORTATION
RALEIGH

LOCATION SKETCH & TOTAL BILL OF MATERIAL

24'-10" CLEAR ROADWAY - 75° SKEW

REVISIONS						SHEET NO.
NO.	BY:	DATE:	NO.	BY:	DATE:	2
1			3			TOTAL SHEETS
2			4			25

DRAWN BY : W. B. ALLEN DATE : 6/11
CHECKED BY : L. K. AUSTIN DATE : 6/11

11/9/2011 10:46:29 AM R:\Structures\B-4464_50_60_02.dgn

LOAD AND RESISTANCE FACTOR RATING (LRFR) SUMMARY FOR PRESTRESSED CONCRETE GIRDERS

LEVEL		VEHICLE	WEIGHT (W) (TONS)	CONTROLLING LOAD RATING	MINIMUM RATING FACTORS (RF)	TONS = W X RF	STRENGTH I LIMIT STATE											SERVICE III LIMIT STATE						COMMENT NUMBER
								MOMENT					SHEAR						MOMENT						
							LIVELOAD FACTORS	DISTRIBUTION FACTORS (DF)	RATING FACTOR	SPAN	GIRDER LOCATION	DISTANCE FROM LEFT END OF SPAN (ft)	DISTRIBUTION FACTORS (DF)	RATING FACTOR	SPAN	GIRDER LOCATION	DISTANCE FROM LEFT END OF SPAN (ft)	LIVELOAD FACTORS	DISTRIBUTION FACTORS (DF)	RATING FACTOR	SPAN	GIRDER LOCATION	DISTANCE FROM LEFT END OF SPAN (ft)	
DESIGN LOAD RATING		HL-93(Inv)	N/A	**1**	1.014	--	1.75	0.269	1.04	70′	EL	34.482	0.608	1.1	70′	EL	3.448	0.80	0.269	**1.01**	70′	EL	**34.482**	
		HL-93(Opr)	N/A	--	1.355	--	1.35	0.269	1.35	70′	EL	34.482	0.608	1.43	70′	EL	3.448	N/A	--	--	--	--	--	
		HS-20(Inv)	36.000	**2**	1.315	47.356	1.75	0.269	1.36	70′	EL	34.482	0.608	1.38	70′	EL	3.448	0.80	0.269	**1.32**	70′	EL	**34.482**	
		HS-20(Opr)	36.000	--	1.757	63.236	1.35	0.269	1.76	70′	EL	34.482	0.608	1.79	70′	EL	3.448	N/A	--	--	--	--	--	
LEGAL LOAD RATING	SV	SNSH	13.500	--	2.938	39.656	1.4	0.269	3.78	70′	EL	34.482	0.608	4.12	70′	EL	3.448	0.80	0.269	2.94	70′	EL	34.482	
		SNGARBS2	20.000	--	2.203	44.052	1.4	0.269	2.84	70′	EL	34.482	0.608	2.93	70′	EL	3.448	0.80	0.269	2.20	70′	EL	34.482	
		SNAGRIS2	22.000	--	2.092	46.016	1.4	0.269	2.69	70′	EL	34.482	0.608	2.72	70′	EL	3.448	0.80	0.269	2.09	70′	EL	34.482	
		SNCOTTS3	27.250	--	1.462	39.844	1.4	0.269	1.88	70′	EL	34.482	0.608	2.06	70′	EL	3.448	0.80	0.269	1.46	70′	EL	34.482	
		SNAGGRS4	34.925	--	1.227	42.856	1.4	0.269	1.58	70′	EL	34.482	0.608	1.71	70′	EL	3.448	0.80	0.269	1.23	70′	EL	34.482	
		SNS5A	35.550	--	1.2	42.646	1.4	0.269	1.54	70′	EL	34.482	0.608	1.73	70′	EL	3.448	0.80	0.269	1.20	70′	EL	34.482	
		SNS6A	39.950	--	1.103	44.058	1.4	0.269	1.42	70′	EL	34.482	0.608	1.58	70′	EL	3.448	0.80	0.269	1.10	70′	EL	34.482	
		SNS7B	42.000	--	1.05	44.113	1.4	0.269	1.35	70′	EL	34.482	0.608	1.55	70′	EL	3.448	0.80	0.269	1.05	70′	EL	34.482	
	TTST	TNAGRIT3	33.000	--	1.345	44.401	1.4	0.269	1.73	70′	EL	34.482	0.608	1.88	70′	EL	3.448	0.80	0.269	1.35	70′	EL	34.482	
		TNT4A	33.075	--	1.352	44.717	1.4	0.269	1.74	70′	EL	34.482	0.608	1.83	70′	EL	3.448	0.80	0.269	1.35	70′	EL	34.482	
		TNT6A	41.600	--	1.108	46.073	1.4	0.269	1.43	70′	EL	34.482	0.608	1.65	70′	EL	3.448	0.80	0.269	1.11	70′	EL	34.482	
		TNT7A	42.000	--	1.114	46.794	1.4	0.269	1.43	70′	EL	34.482	0.608	1.62	70′	EL	3.448	0.80	0.269	1.11	70′	EL	34.482	
		TNT7B	42.000	--	1.155	48.526	1.4	0.269	1.49	70′	EL	34.482	0.608	1.51	70′	EL	3.448	0.80	0.269	1.16	70′	EL	34.482	
		TNAGRIT4	43.000	--	1.097	47.174	1.4	0.269	1.41	70′	EL	34.482	0.608	1.46	70′	EL	3.448	0.80	0.269	1.10	70′	EL	34.482	
		TNAGT5A	45.000	--	1.033	46.505	1.4	0.269	1.33	70′	EL	34.482	0.608	1.45	70′	EL	3.448	0.80	0.269	1.03	70′	EL	34.482	
		TNAGT5B	45.000	**3**	1.02	45.905	1.4	0.269	1.31	70′	EL	34.482	0.608	1.39	70′	EL	3.448	0.80	0.269	**1.02**	70′	EL	**34.482**	

LOAD FACTORS:

DESIGN LOAD RATING FACTORS	LIMIT STATE	γ_{DC}	γ_{DW}
	STRENGTH I	1.25	1.50
	SERVICE III	1.00	1.00

NOTES:

MINIMUM RATING FACTORS ARE BASED ON THE STRENGTH I AND SERVICE III LIMIT STATES.

ALLOWABLE STRESSES FOR SERVICE III LIMIT STATE ARE AS REQUIRED FOR DESIGN.

COMMENTS:

1.
2.
3.
4.

⟨#⟩ CONTROLLING LOAD RATING

⟨1⟩ DESIGN LOAD RATING (HL-93)

⟨2⟩ DESIGN LOAD RATING (HS-20)

⟨3⟩ LEGAL LOAD RATING **

** SEE CHART FOR VEHICLE TYPE

GIRDER LOCATION

I - INTERIOR GIRDER
EL - EXTERIOR LEFT GIRDER
ER - EXTERIOR RIGHT GIRDER

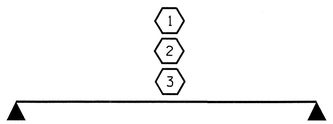

LRFR SUMMARY

FOR SPAN 'A'

PROJECT NO. B-4464

CHOWAN COUNTY

STATION: 12+12.50 -L-

STATE OF NORTH CAROLINA
DEPARTMENT OF TRANSPORTATION
RALEIGH

STANDARD

LRFR SUMMARY

(NON-INTERSTATE TRAFFIC)

NORTH CAROLINA PROFESSIONAL SEAL 14855 ENGINEER DOUGLAS R. CALHOUN
10-24-11

REVISIONS						SHEET NO.
NO.	BY:	DATE:	NO.	BY:	DATE:	3
1			3			TOTAL SHEETS
2			4			25

ASSEMBLED BY : K. P. SEDAI DATE : 9/1/11
CHECKED BY : D. R. CALHOUN DATE : 10/17/11

DRAWN BY : CVC 6/10
CHECKED BY : DNS 6/10

24-OCT-2011 13:36
P:\Structures\ksedai\NCBDS\B-4464_Super_Sub_Str.dgn
ksedai

STD. NO. 24LRFR1_75&105S_70L

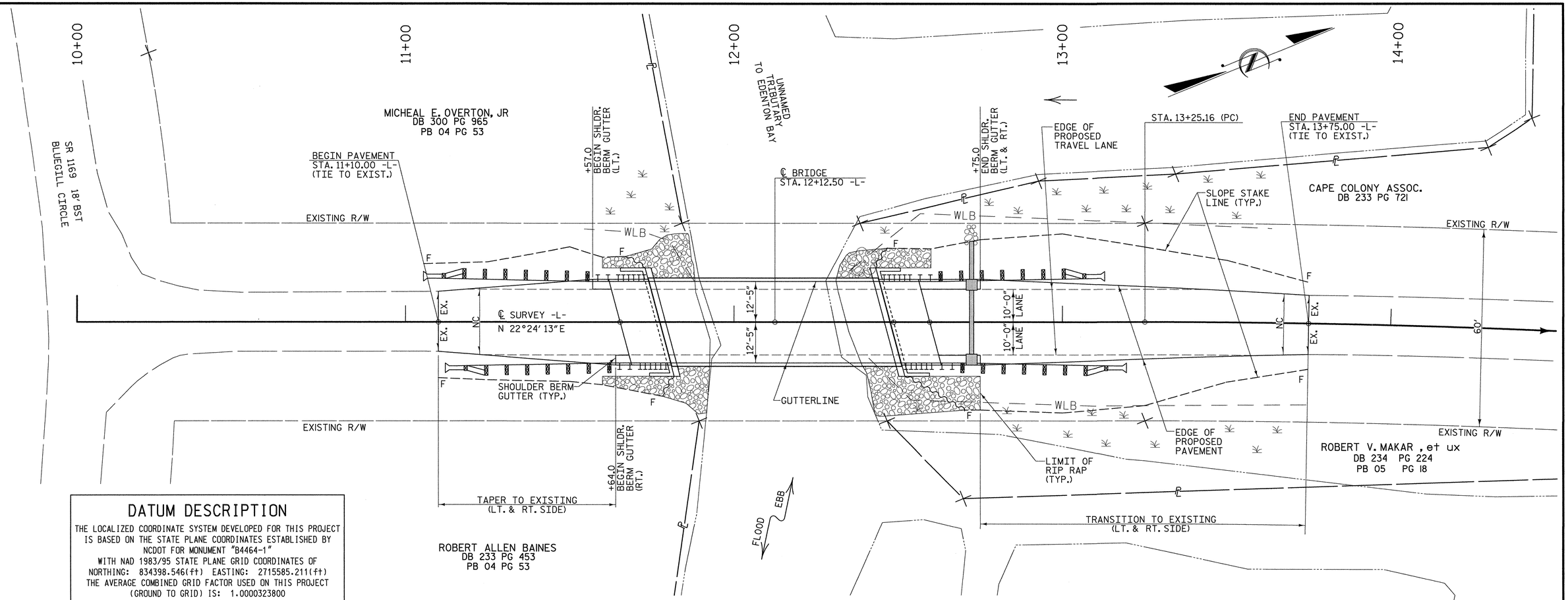

DATUM DESCRIPTION

THE LOCALIZED COORDINATE SYSTEM DEVELOPED FOR THIS PROJECT IS BASED ON THE STATE PLANE COORDINATES ESTABLISHED BY NCDOT FOR MONUMENT "B4464-1"
WITH NAD 1983/95 STATE PLANE GRID COORDINATES OF
NORTHING: 834398.546(ft) EASTING: 2715585.211(ft)
THE AVERAGE COMBINED GRID FACTOR USED ON THIS PROJECT (GROUND TO GRID) IS: 1.0000323800
THE N.C. LAMBERT GRID BEARING AND LOCALIZED HORIZONTAL GROUND DISTANCE FROM "B4464-1" TO -L- STATION 11+10.00 IS
N 26° 55' 09.4" E 122.73'
ALL LINEAR DIMENSIONS ARE LOCALIZED HORIZONTAL DISTANCES
VERTICAL DATUM USED IS NAVD 88

PAVEMENT LAYOUT DETAIL

SCALE : 1" = 15'

HORIZONTAL CURVE DATA

PI STA. 14+41.63
△ = 4° 39' 21.8"(RT)
D = 2° 00' 00.0"
L = 232.80'
T = 116.47'
R = 2,864.79'

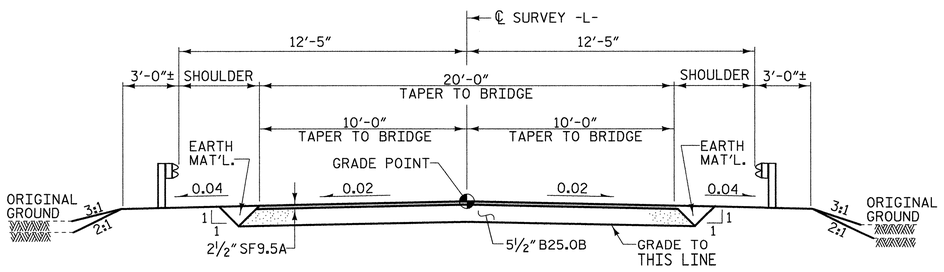

FULL DEPTH PAVEMENT

FROM -L- STA. 11+50 TO BEGIN BRIDGE
FROM END BRIDGE TO -L- STA. 13+50

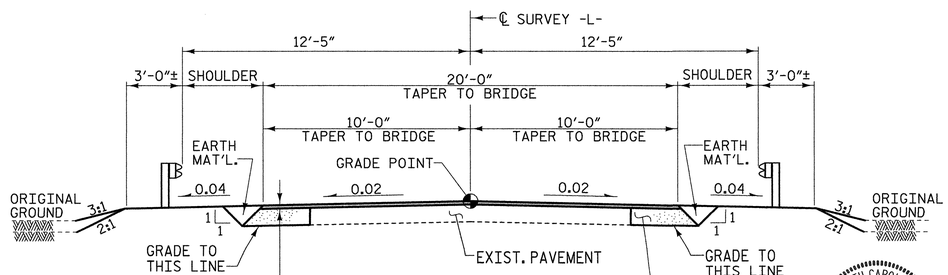

WIDENING PAVEMENT

FROM -L- STA. 11+10.00 TO -L- STA. 11+50
FROM -L- STA. 13+50 TO -L- STA. 13+75.00

TYPICAL ROADWAY SECTION

WITHIN CONSTRUCTION LIMITS

NORTH CAROLINA PROFESSIONAL SEAL 1966 ENGINEER L. KEVIN AUSTIN 11/2/11

PLANS PREPARED BY:

MULKEY
ENGINEERS & CONSULTANTS
PO BOX 93127
RALEIGH, NC 27636
(919) 851-1918
(919) 851-1918 (FAX)
WWW.MULKEYINC.COM

DRAWN BY : W. B. ALLEN DATE : 6/11
CHECKED BY : L. K. AUSTIN DATE : 6/11

PROJECT NO. B-4464
CHOWAN COUNTY
STATION: 12+12.50 -L-

REPLACES BRIDGE NO. 35

STATE OF NORTH CAROLINA
DEPARTMENT OF TRANSPORTATION
RALEIGH

ROADWAY DETAILS

24'-10" CLEAR ROADWAY - 75°SKEW

REVISIONS						SHEET NO.
NO.	BY:	DATE:	NO.	BY:	DATE:	4
1			3			TOTAL SHEETS
2			4			25

11/2/2011 7:46:41 AM R:\STructures\B-4464_SD_02_03.dgn

TRAFFIC CONTROL FOR TEMPORARY ROAD CLOSURE

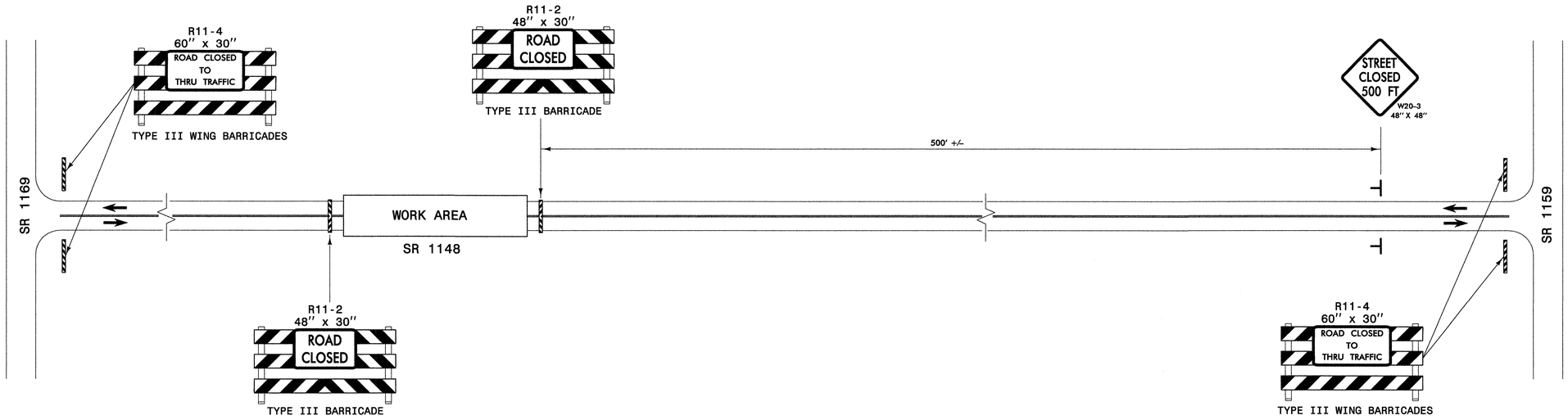

LEGEND

⊢ STATIONARY SIGN

← DIRECTION OF TRAFFIC FLOW

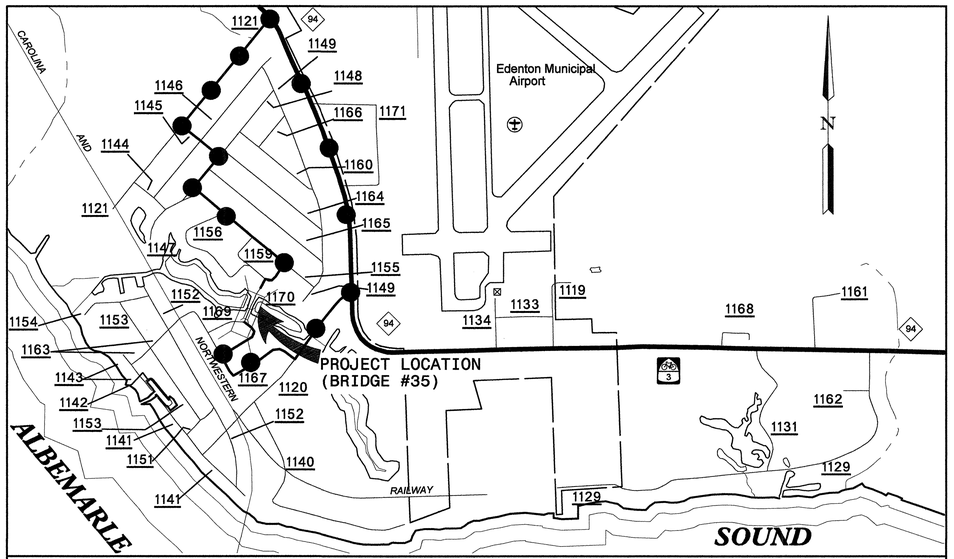

VICINITY MAP
(NOT TO SCALE)

DETOUR ROUTE

GENERAL NOTES

1- INSTALLATION OF TEMPORARY ROUTE MARKERS, DESTINATION SIGNS AND ANY NECESSARY MODIFICATIONS TO EXISTING OR PROPOSED REGULATORY OR WARNING SIGNS WILL BE MADE BY OTHERS (STATE OR CITY FORCES) UNLESS OTHERWISE DESIGNATED IN PLANS. PROVIDE A MINIMUM 21 CALENDAR DAY NOTICE TO STATE FORCES BEFORE A ROADWAY IS CLOSED TO TRAFFIC SUCH THAT NECESSARY PROVISIONS CA BE MADE TO INFORM LOCAL EMERGENCY AND LAW ENFORCEMENT PERSONNEL, SCHOOLS OR OTHER PARTIES AFFECTED BY THE ROAD CLOSURE.

2- DO NOT INSTALL ADVANCE WARING SIGNS MORE THAN 3 DAYS PRIOR TO BEGINING OF WORK.

3- INSTALL SIGNS BEFORE THE BARRICADES WHEN CLOSING THE ROADWAY TO TRAFFIC. REMOVE BARRICADES BEFORE SIGNS WHEN OPENING THE ROADWAY TO TRAFFIC. INSTALL/REMOVE SIGNS AND BARRICADES WITHIN THE SAME CALENDAR DAY.

4- POSITION WING BARRICADES ON THE SHOULDERS AND SLOPE THE STRIPES DOWNWARDIN THE DIRECTION TOWARD WHICH TRAFFIC MUST TURN IN DETOURING.

5- USE PORTABLE SIGNS IF ROAD CLOSURE IS TO BE IMPLEMENTED FOR LESS THAN ONE DAY OR FOR EMERGENCIES.

PROJECT NO. B-4464

CHOWAN COUNTY

STATION: 12+12.50 -L-

REPLACES BRIDGE NO. 35

NORTH CAROLINA PROFESSIONAL ENGINEER SEAL 19661 L. KEVIN AUSTIN 11/2/11

PLANS PREPARED BY:

MULKEY
ENGINEERS & CONSULTANTS
PO Box 33127
RALEIGH, N.C. 27636
(919) 851-1912
(919) 851-1918 (FAX)
WWW.MULKEYINC.COM

STATE OF NORTH CAROLINA
DEPARTMENT OF TRANSPORTATION
RALEIGH

TRAFFIC CONTROL

24'-10" CLEAR ROADWAY - 75° SKEW

REVISIONS						SHEET NO.
NO.	BY:	DATE:	NO.	BY:	DATE:	5
1			3			TOTAL SHEETS
2			4			25

DRAWN BY : W. B. ALLEN DATE : 6/11

CHECKED BY : L. K. AUSTIN DATE : 6/11

11/2/2011 7:48:07 AM R:\Structures\B-4464_SD_TCP_0.dgn

PROJ. REFERENCE NO.	SHEET NO.	TOTAL SHEETS
B-4464	6	25

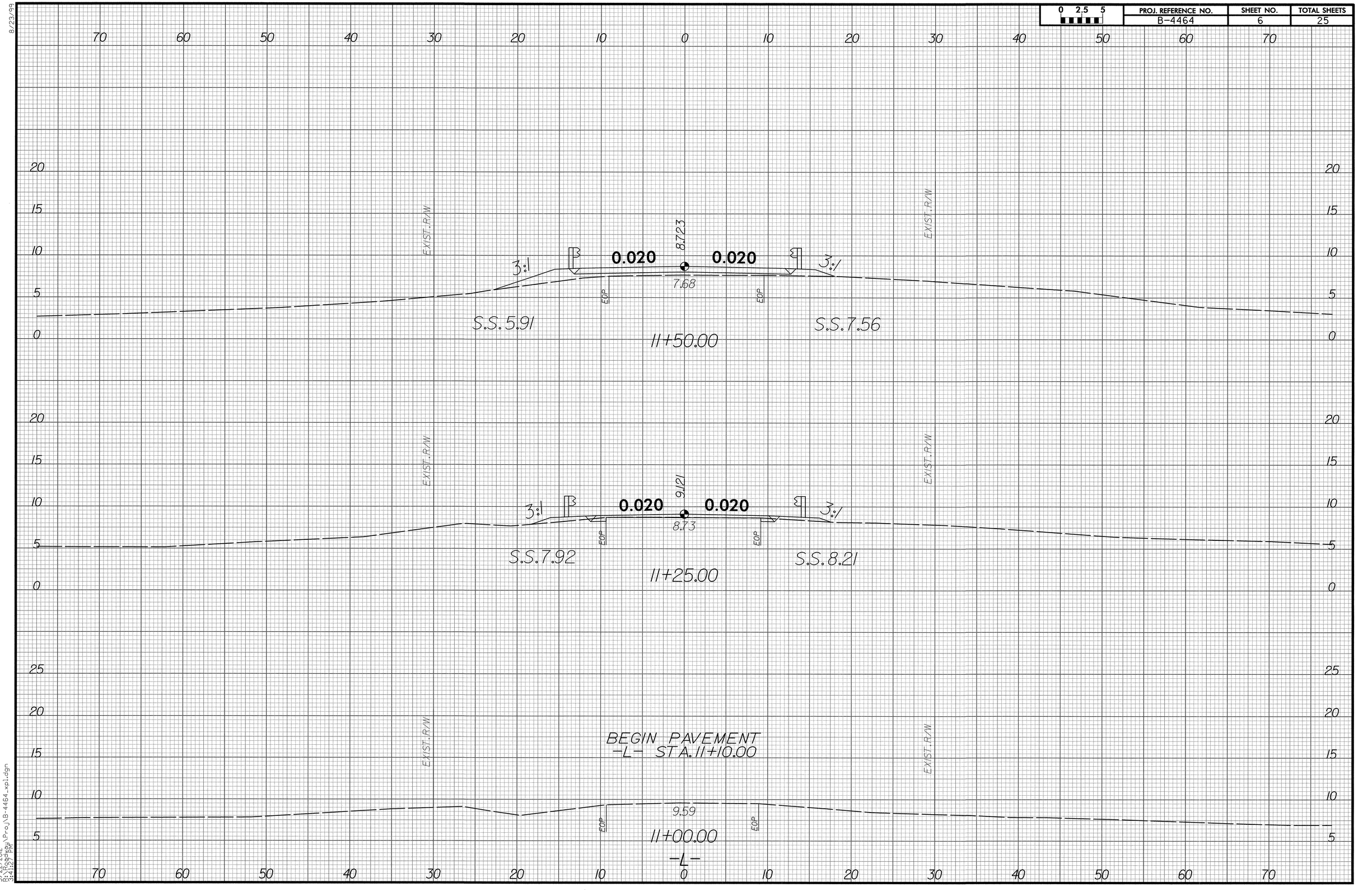

8/23/99

3/22/2012
R:\Roadway\Proj\B-4464_xpl.dgn
3:41:27 PM

PROJ. REFERENCE NO.	SHEET NO.	TOTAL SHEETS
B-4464	7	25

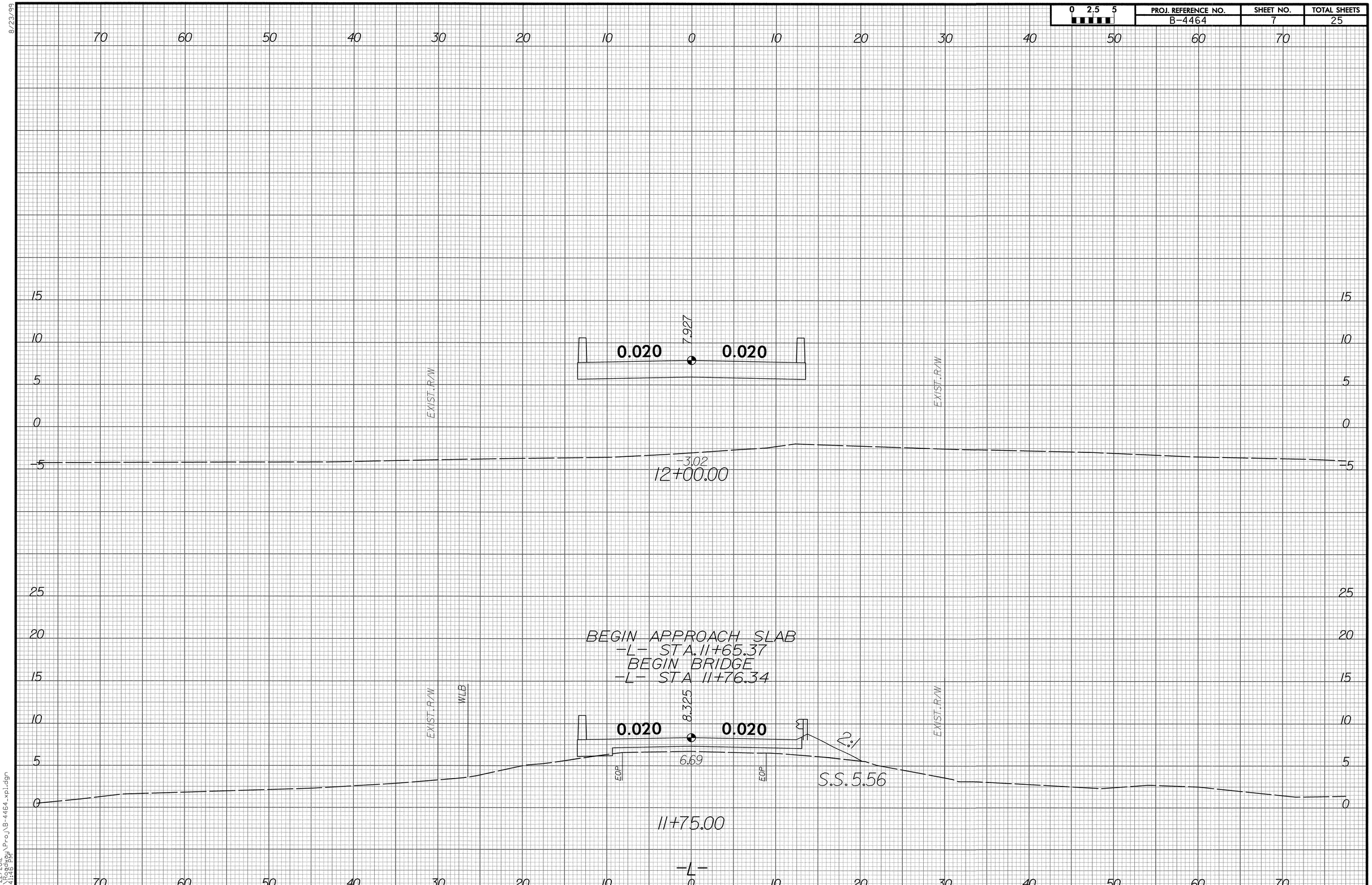

8/23/99

3/22/2012
R:\Roadway\Proj\B-4464_xpl.dgn
3:41:46 PM

PROJ. REFERENCE NO.	SHEET NO.	TOTAL SHEETS
B-4464	8	25

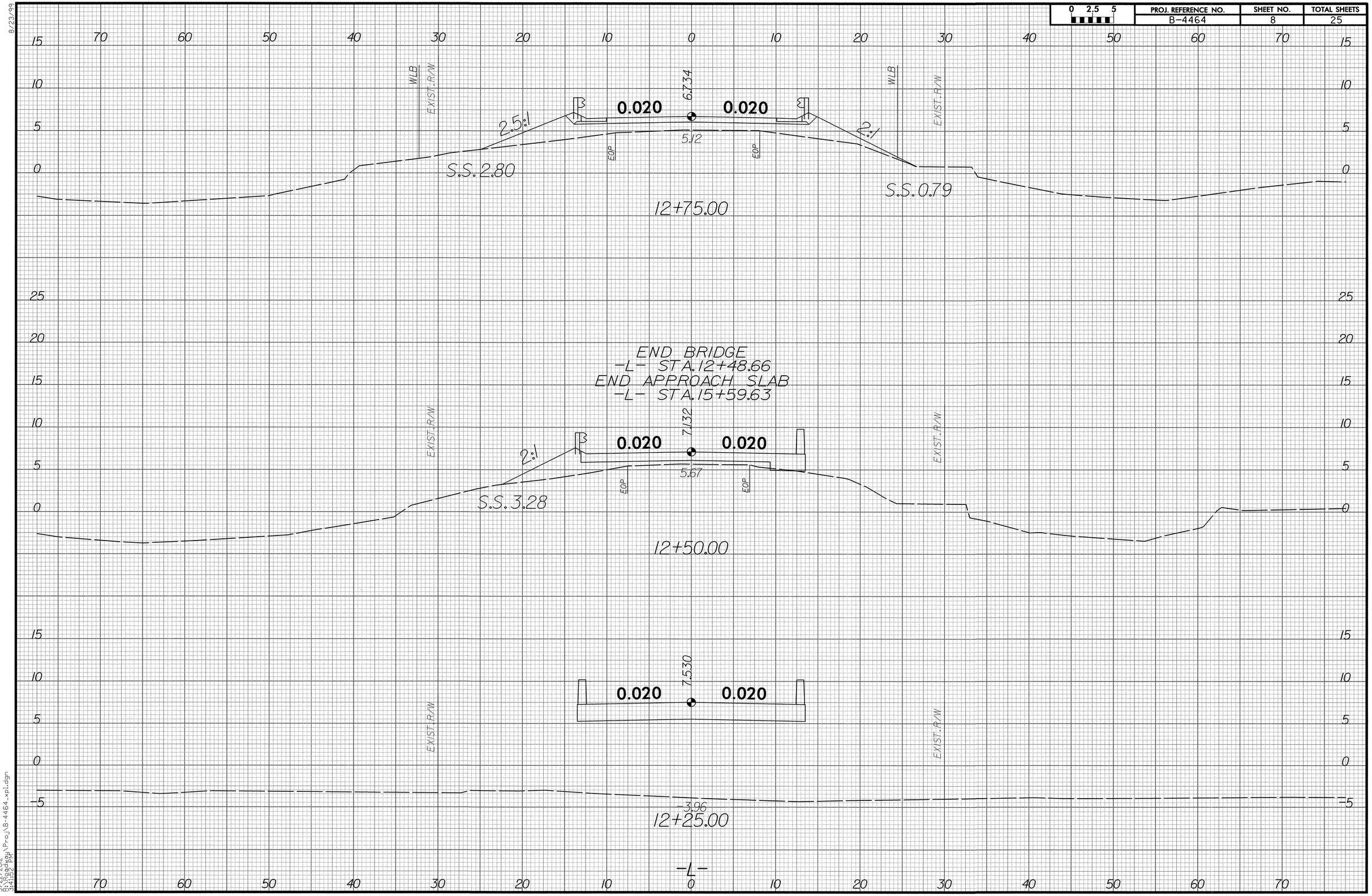

8/23/99

3/22/2012
R:\Roadway\Proj\B-4464_xpl.dgn
3:41:52 PM

PROJ. REFERENCE NO.	SHEET NO.	TOTAL SHEETS
B-4464	9	25

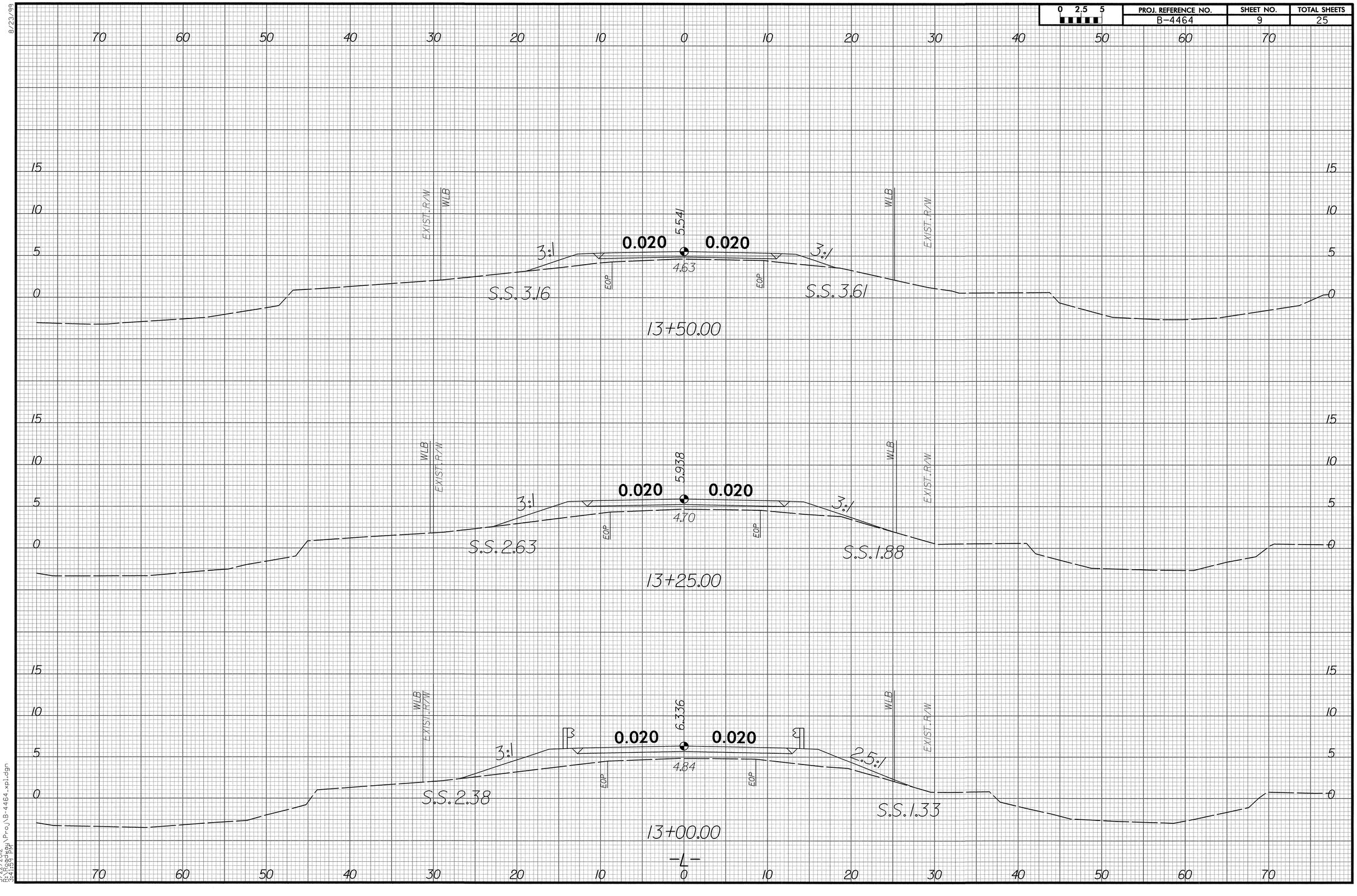

8/23/99

3/22/2012
R:\Roadway\Proj\B-4464_xpl.dgn
3:41:59 PM

PROJ. REFERENCE NO.	SHEET NO.	TOTAL SHEETS
B-4464	10	25

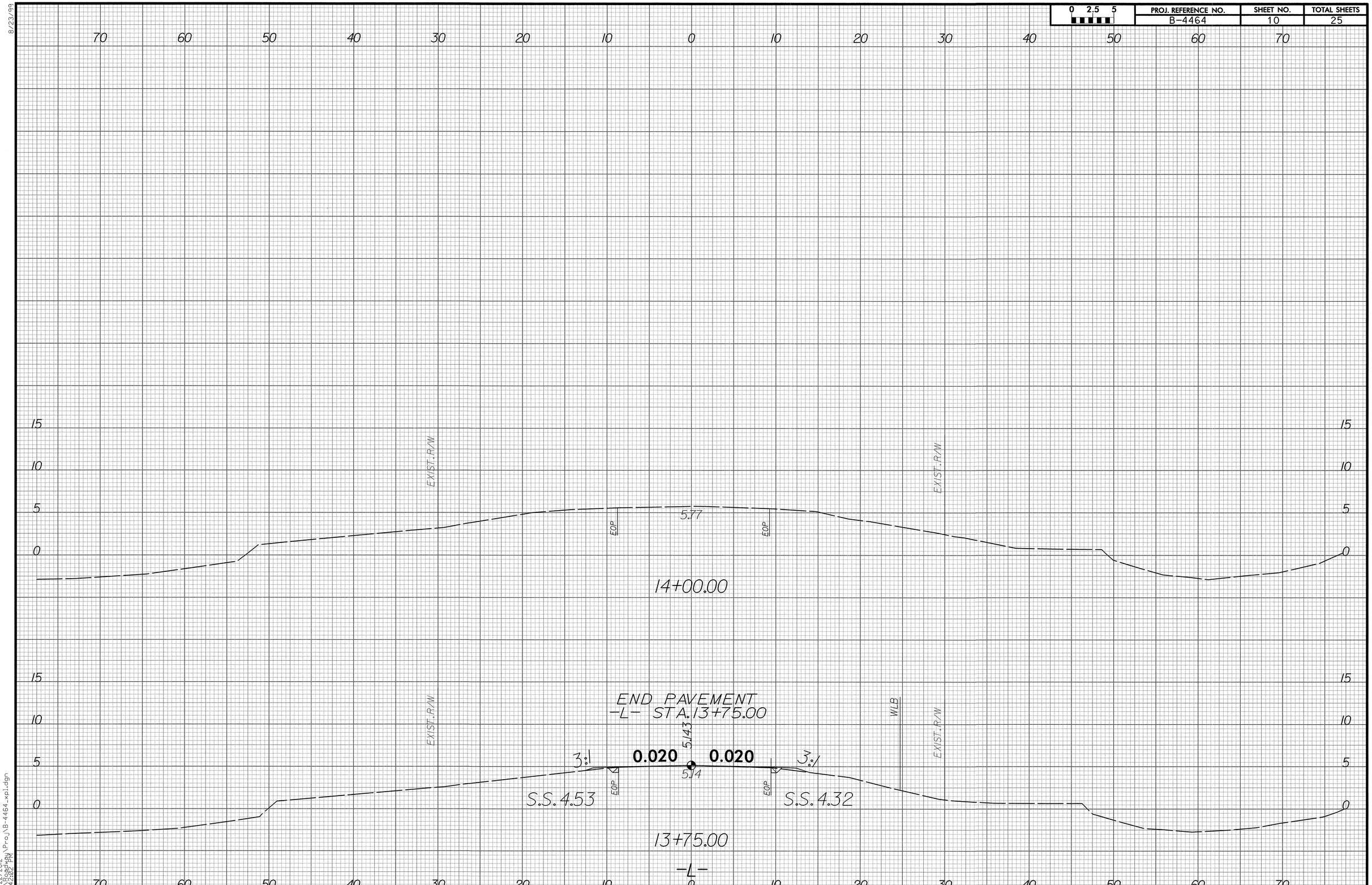

8/23/99

3/22/2012
R:\Roadway\Proj\B-4464_xpl.dgn
3:42:02 PM

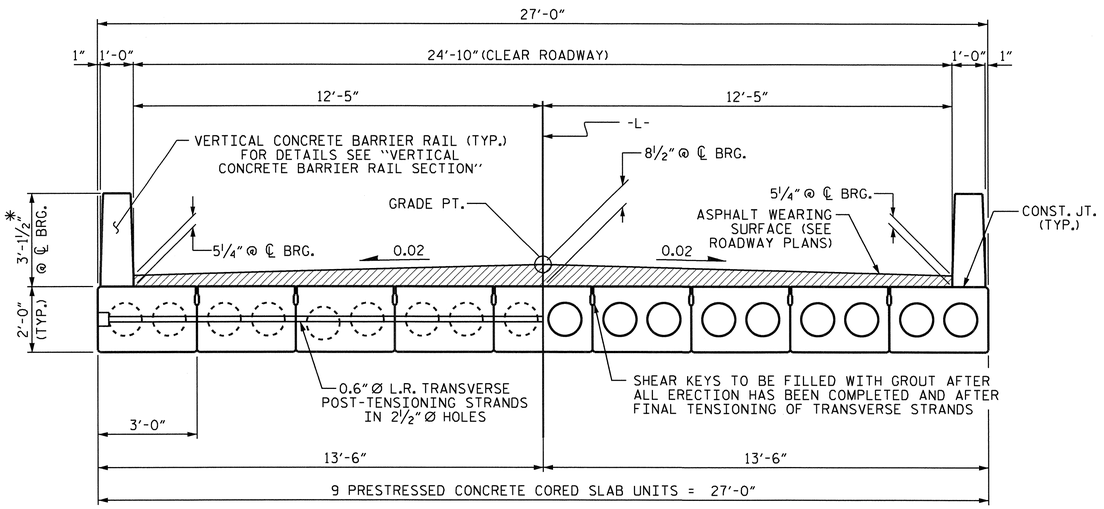

HALF SECTION AT INTERMEDIATE DIAPHRAGMS

HALF SECTION THROUGH VOIDS

TYPICAL SECTION

* - THE MAXIMUM BARRIER RAIL HEIGHT AND ASPHALT THICKNESS IS SHOWN. THE HEIGHT OF THE BARRIER RAIL AND ASPHALT THICKNESS VARIES WHILE THE TOP OF THE BARRIER RAIL FOLLOWS THE PROFILE OF THE GUTTERLINE. FOR RAIL HEIGHT DETAILS AND ASPHALT THICKNESS, SEE THE "VERTICAL CONCRETE BARRIER RAIL SECTION" DETAIL.

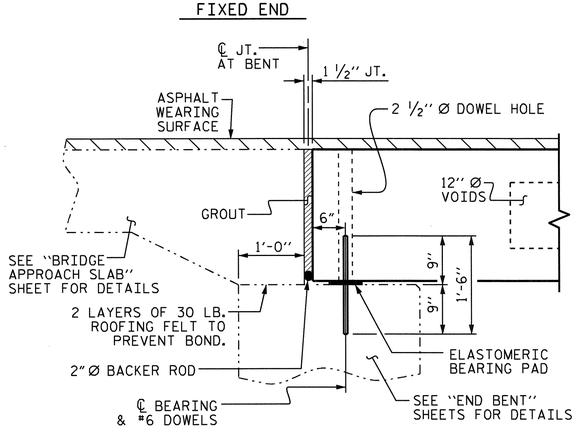

SECTION AT END BENT

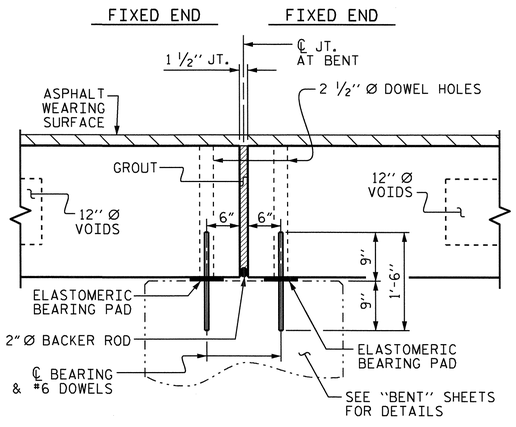

SECTION AT BENT

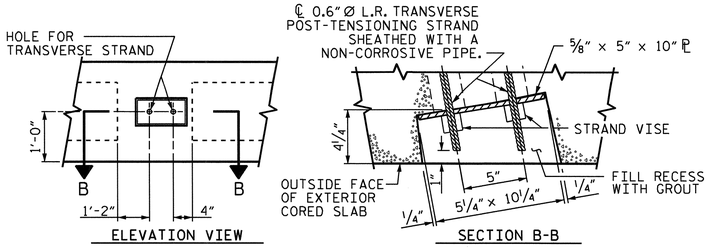

GROUTED RECESS AT END OF POST-TENSIONED STRAND OF CORED SLABS

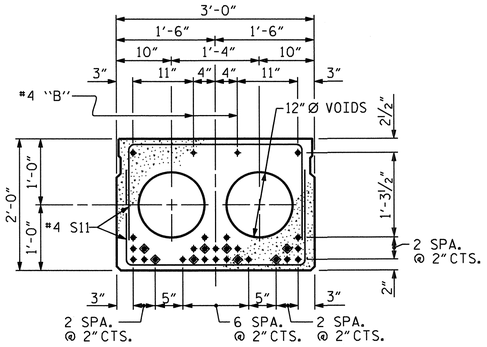

STRAND LAYOUT FOR 70' UNIT

(28 STRANDS REQUIRED)

INTERIOR SLAB SECTION

0.6" Ø LOW RELAXATION

◈ BOND SHALL BE BROKEN ON THESE STRANDS FOR A DISTANCE OF 12'-0" FROM END OF CORED SLAB UNIT. SEE STANDARD SPECIFICATIONS, ARTICLE 1078-7.

◉ OPTIONAL FULL LENGTH DEBONDED STRANDS. THESE STRANDS ARE NOT REQUIRED. IF THE FABRICATOR CHOOSES TO INCLUDE THESE STRANDS IN THE CORED SLAB UNIT, THE STRANDS SHALL BE DEBONDED FOR THE FULL LENGTH OF THE UNIT AT NO ADDITIONAL COST. SEE STANDARD SPECIFICATIONS, ARTICLE 1078-7.

DEBONDING LEGEND

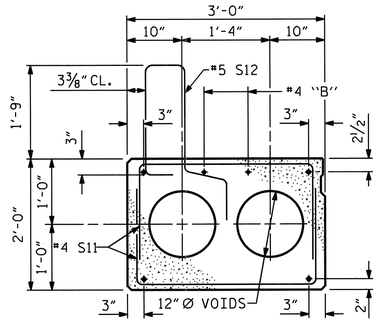

EXTERIOR SLAB SECTION

(FOR PRESTRESSED STRAND LAYOUT, SEE INTERIOR SLAB SECTION.)

END ELEVATION

SHOWING PLACEMENT OF DOUBLE STIRRUPS AND LOCATION OF DOWEL HOLES. (STRAND LAYOUT NOT SHOWN.) INTERIOR SLAB UNIT SHOWN-EXTERIOR SLAB UNIT SIMILAR EXCEPT SHEAR KEY LOCATION.

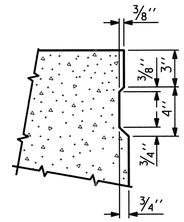

SHEAR KEY DETAIL

NOTE: OMIT SHEAR KEY ON OUTSIDE FACE OF EXTERIOR CORED SLABS.

PROJECT NO. B-4464

CHOWAN COUNTY

STATION: 12+12.50 -L-

SHEET 1 OF 3

STATE OF NORTH CAROLINA
DEPARTMENT OF TRANSPORTATION
RALEIGH

STANDARD

3'-0" X 2'-0" PRESTRESSED CONCRETE CORED SLAB UNIT

NORTH CAROLINA PROFESSIONAL SEAL 14855 ENGINEER DOUGLAS R. CALHOUN 10-24-11

REVISIONS						SHEET NO.
NO.	BY:	DATE:	NO.	BY:	DATE:	11
1			3			TOTAL SHEETS
2			4			25

ASSEMBLED BY : K. P. SEDAI	DATE : 9/1/11
CHECKED BY : D. R. CALHOUN	DATE : 10/17/11
DRAWN BY : MAA 6/10	
CHECKED BY : MKT 7/10	

24-OCT-2011 13:32
P:\Structures\ksedai\NCBDS\B-4464_Super_Sub_Str.dgn
ksedai

STD. NO. 24PCS4_27_75S

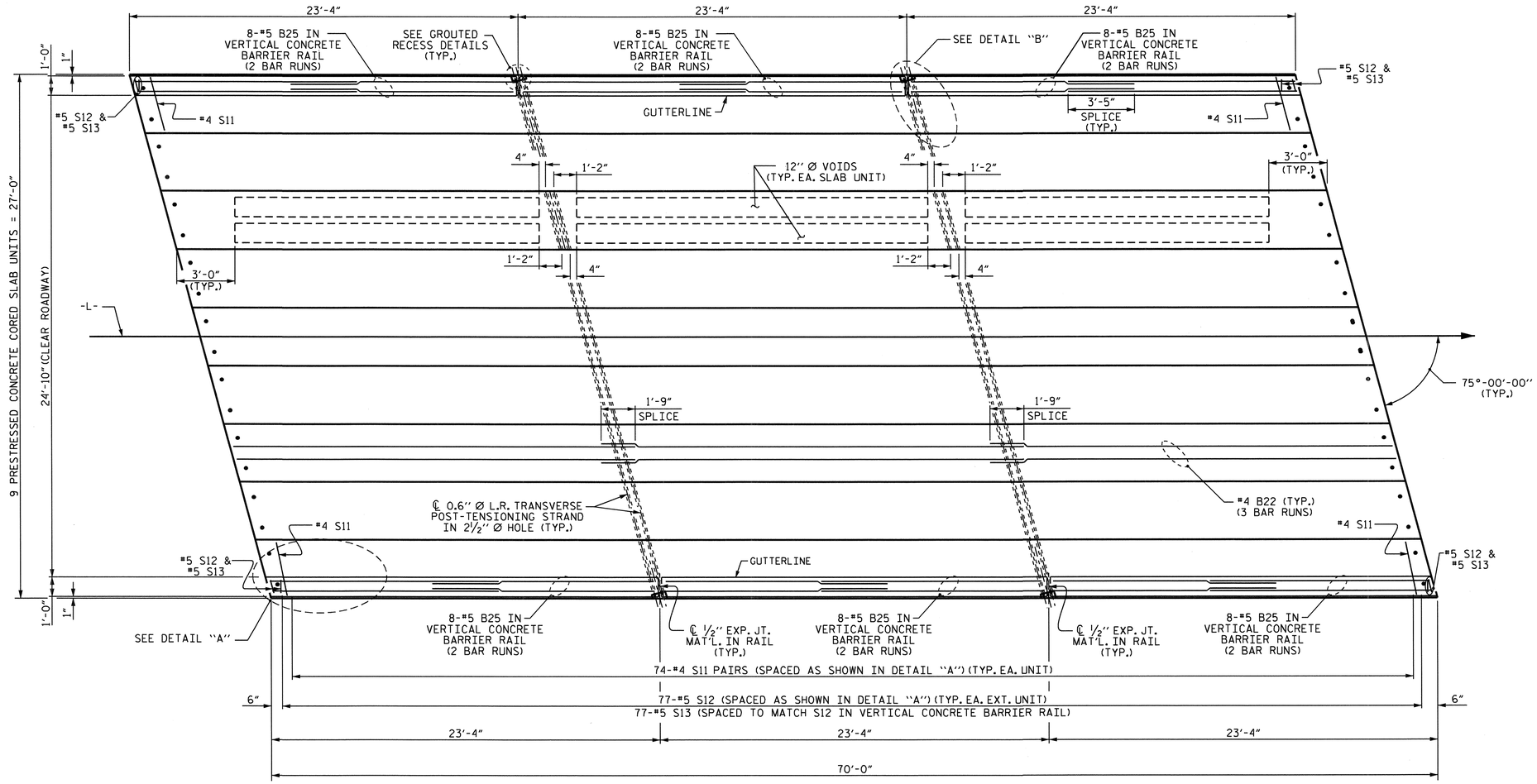

PLAN OF UNIT

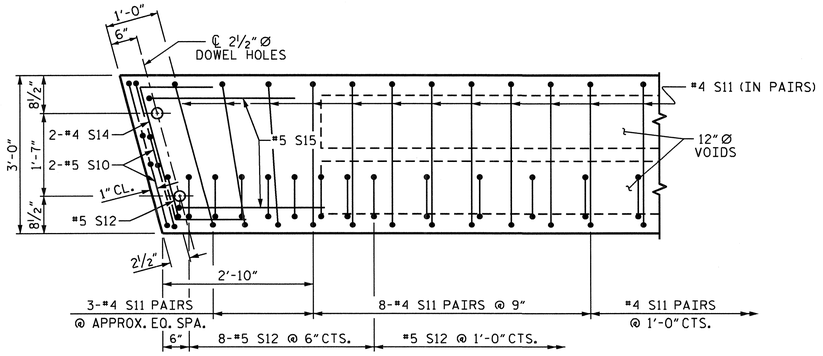

DETAIL "A"

NOTE: EXTERIOR UNIT SHOWN - INTERIOR UNIT SIMILAR EXCEPT OMIT #5 S12 BARS.

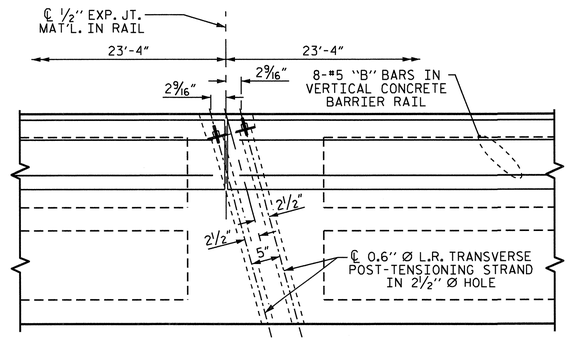

DETAIL "B"

#4 S11 BARS MAY BE SHIFTED AS NECESSARY TO MAINTAIN 1" CLEAR TO GROUTED RECESS AND 2½" Ø TRANSVERSE POST-TENSIONING STRAND HOLES

PROJECT NO. B-4464

CHOWAN COUNTY

STATION: 12+12.50 -L-

SHEET 2 OF 3

STATE OF NORTH CAROLINA
DEPARTMENT OF TRANSPORTATION
RALEIGH

PLAN OF 70' UNIT 24'-10" CLEAR ROADWAY 75° SKEW

NORTH CAROLINA PROFESSIONAL SEAL 14855 ENGINEER DOUGLAS R. CALHOUN

10-24-11

REVISIONS						SHEET NO.
NO.	BY:	DATE:	NO.	BY:	DATE:	12
1			3			TOTAL SHEETS
2			4			25

ASSEMBLED BY :	K. P. SEDAI	DATE : 9/1/11
CHECKED BY :	D. R. CALHOUN	DATE : 10/17/11
DRAWN BY :	MAA 6/10	
CHECKED BY :	MKT 7/10	

24-OCT-2011 13:34
P:\Structures\ksedal\NCBDS\B-4464_Super_Sub_Str.dgn
ksedal

STD. NO. 24PCS_27_75S_70L

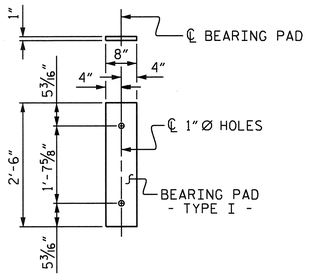

FIXED END
(TYPE I - 18 REQ'D.)

ELASTOMERIC BEARING DETAILS

ELASTOMER IN ALL BEARINGS SHALL BE 60 DUROMETER HARDNESS.

GRADE 270 STRANDS	
	0.6" Ø L.R.
AREA (SQUARE INCHES)	0.217
ULTIMATE STRENGTH (LBS. PER STRAND)	58,600
APPLIED PRESTRESS (LBS. PER STRAND)	43,950

CORED SLABS REQUIRED			
	NUMBER	LENGTH	TOTAL LENGTH
70' UNIT			
EXTERIOR C.S.	2	70'-0"	140'-0"
INTERIOR C.S.	7	70'-0"	490'-0"
TOTAL	9		630'-0"

DEAD LOAD DEFLECTION AND CAMBER	
	3'-0" x 2'-0"
70' CORED SLAB UNIT	0.6" Ø L.R. STRAND
CAMBER (SLAB ALONE IN PLACE)	4 5/16" ↑
DEFLECTION DUE TO SUPERIMPOSED DEAD LOAD**	13/16" ↓
FINAL CAMBER	3 1/2" ↑

** INCLUDES FUTURE WEARING SURFACE

BAR TYPES

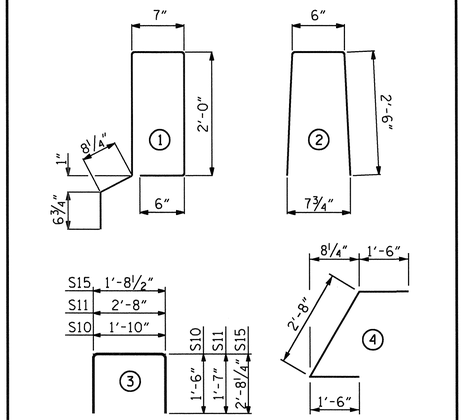

ALL BAR DIMENSIONS ARE OUT TO OUT

NOTES

ALL PRESTRESSING STRANDS SHALL BE 7-WIRE LOW RELAXATION GRADE 270 STRANDS AND SHALL CONFORM TO AASHTO M203 EXCEPT FOR SAMPLING REQUIREMENTS WHICH SHALL BE IN ACCORDANCE WITH THE STANDARD SPECIFICATIONS.

ALL REINFORCING STEEL CAST WITH THE CORED SLAB SECTIONS SHALL BE GRADE 60 AND SHALL BE INCLUDED IN THE UNIT PRICE BID FOR PRESTRESSED CONCRETE CORED SLABS.

RECESSES FOR TRANSVERSE STRANDS SHALL BE GROUTED AFTER THE TENSIONING OF THE STRANDS.

THE 2 1/2" Ø DOWEL HOLES AT FIXED ENDS OF SLAB SECTIONS SHALL BE FILLED WITH NON-SHRINK GROUT.

THE 2" Ø BACKER ROD SHALL CONFORM TO THE REQUIREMENTS OF TYPE M BOND BREAKER. SEE SECTION 1028 OF THE STANDARD SPECIFICATIONS.

WHEN CORED SLABS ARE CAST, AN INTERNAL HOLD-DOWN SYSTEM SHALL BE EMPLOYED TO PREVENT VOIDS FROM RISING OR MOVING SIDEWAYS. AT LEAST SIX WEEKS PRIOR TO CASTING CORED SLABS, THE CONTRACTOR SHALL SUBMIT TO THE ENGINEER FOR REVIEW AND COMMENT, DETAILED DRAWINGS OF THE PROPOSED HOLD-DOWN SYSTEM. IN ADDITION TO STRUCTURAL DETAILS, LOCATION AND SPACING OF THE HOLD-DOWNS SHALL BE INDICATED.

THE TRANSFER OF LOAD FROM THE ANCHORAGES TO THE CORED SLAB UNIT SHALL BE DONE WHEN THE CONCRETE HAS REACHED A COMPRESSIVE STRENGTH OF NOT LESS THAN THE REQUIRED STRENGTH SHOWN IN THE "CONCRETE RELEASE STRENGTH" TABLE.

ALL REINFORCING STEEL IN VERTICAL CONCRETE BARRIER RAILS SHALL BE EPOXY COATED.

PRESTRESSING STRANDS SHALL BE CUT FLUSH WITH THE CORED SLAB UNIT ENDS.

APPLY EPOXY PROTECTIVE COATING TO CORED SLAB UNIT ENDS.

GROOVED CONTRACTION JOINTS, 1/2" IN DEPTH, SHALL BE TOOLED IN ALL EXPOSED FACES OF THE BARRIER RAIL AND IN ACCORDANCE WITH ARTICLE 825-10(B) OF THE STANDARD SPECIFICATIONS. A CONTRACTION JOINT SHALL BE LOCATED AT EACH THIRD POINT BETWEEN BARRIER RAIL EXPANSION JOINTS. ONLY ONE CONTRACTION JOINT IS REQUIRED AT MIDPOINT OF BARRIER RAIL SEGMENTS LESS THAN 20 FEET IN LENGTH AND NO CONTRACTION JOINTS ARE REQUIRED FOR THOSE SEGMENTS LESS THAN 10 FEET IN LENGTH.

TRANSVERSE POST TENSIONING OF THE CORED SLAB UNITS SHALL BE DONE IN ACCORDANCE WITH THE STANDARD SPECIFICATIONS, EXCEPT THAT THE STRANDS SHALL BE 0.6" Ø AND TENSIONED TO 43,950 POUNDS.

MAINTAIN A SYMMETRIC TENSION FORCE BETWEEN EACH PAIR OF TRANSVERSE POST TENSIONING STRANDS IN THE DIAPHRAGM.

THE #4 S11 STIRRUPS MAY BE SHIFTED AS NECESSARY TO MAINTAIN 1" CLEAR TO THE GROUTED RECESS.

FOR GROUT FOR STRUCTURES, SEE SPECIAL PROVISIONS.

FOR VERTICAL CONCRETE BARRIER RAIL, SEE SPECIAL PROVISIONS.

PRESTRESSED CONCRETE CORED SLAB UNITS ARE DESIGNED FOR 0 PSI TENSION IN THE PRECOMPRESSED TENSILE ZONE UNDER ALL LOADING CONDITIONS.

PRESTRESSED CONCRETE CORED SLAB UNITS SHALL CONTAIN CALCIUM NITRITE CORROSION INHIBITOR IN ACCORDANCE WITH THE STANDARD SPECIFICATIONS.

BILL OF MATERIAL FOR VERTICAL CONCRETE BARRIER RAIL

BAR	BARS PER PAIR OF EXTERIOR UNITS	TOTAL NO.	SIZE	TYPE	LENGTH	WEIGHT
	70' UNIT					
*B25	96	96	#5	STR	13'-8"	1368
*S13	158	158	#5	2	5'-6"	906
* EPOXY COATED REINFORCING STEEL				LBS.		2274
CLASS AA CONCRETE				CU.YDS.		14.8
TOTAL VERTICAL CONCRETE BARRIER RAIL				LN. FT.		140.26

BILL OF MATERIAL FOR ONE 70' CORED SLAB UNIT

				EXTERIOR UNIT		INTERIOR UNIT	
BAR	NUMBER	SIZE	TYPE	LENGTH	WEIGHT	LENGTH	WEIGHT
B22	6	#4	STR	24'-6"	98	24'-6"	98
S10	8	#5	3	4'-10"	40	4'-10"	40
S11	148	#4	3	5'-10"	577	5'-10"	577
*S12	79	#5	1	6'-4"	522		
S14	4	#4	4	5'-8"	15	5'-8"	15
S15	4	#5	3	7'-1"	30	7'-1"	30
REINFORCING STEEL			LBS.		760		760
* EPOXY COATED REINFORCING STEEL			LBS.		522		
7000 P.S.I. CONCRETE			CU. YDS.		12.0		12.0
0.6" Ø L.R. STRANDS			No.		28		28

CONCRETE RELEASE STRENGTH	
UNIT	PSI
70' UNITS	5500

GUTTERLINE ASPHALT THICKNESS & RAIL HEIGHT		
27' & 30' NC and 27' & 30' SUPER ELEV	ASPHALT OVERLAY THICKNESS @ MID-SPAN	RAIL HEIGHT @ MID-SPAN
70' UNITS	1 3/4"	2'-10"

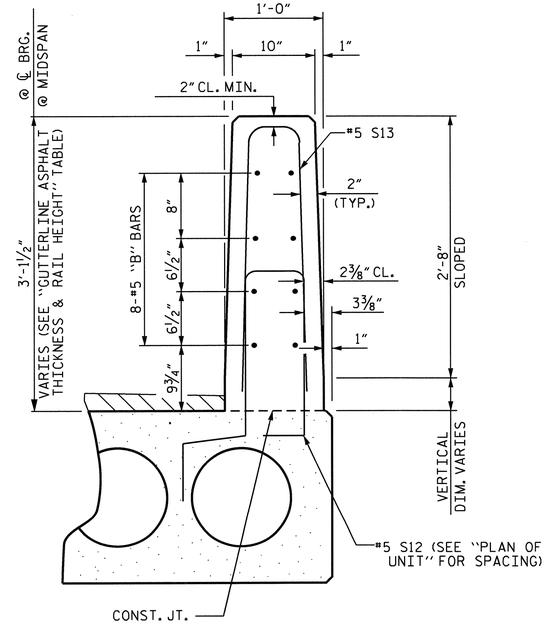

SECTION THRU RAIL

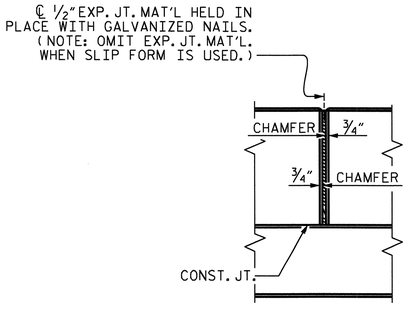

ELEVATION AT EXPANSION JOINTS

VERTICAL CONCRETE BARRIER RAIL DETAILS

ASSEMBLED BY : K. P. SEDAI		DATE : 9/1/11	
CHECKED BY : D. R. CALHOUN		DATE : 10/17/11	
DRAWN BY : MAA	6/10		
CHECKED BY : MKT	7/10		

NORTH CAROLINA PROFESSIONAL SEAL 14855 ENGINEER DOUGLAS R. CALHOUN
10-24-11

PROJECT NO. B-4464
CHOWAN COUNTY
STATION: 12+12.50 -L-

SHEET 3 OF 3

STATE OF NORTH CAROLINA
DEPARTMENT OF TRANSPORTATION
RALEIGH
STANDARD
3'-0" X 2-0"
PRESTRESSED CONCRETE
CORED SLAB UNIT

REVISIONS						SHEET NO.
NO.	BY:	DATE:	NO.	BY:	DATE:	13
1			3			TOTAL SHEETS
2			4			25

24-OCT-2011 13:33
P:\Structures\ksedal\NCBDS\B-4464_Super_Sub_Str.dgn
ksedal

STD. NO. 24PCS3_27_75&105S

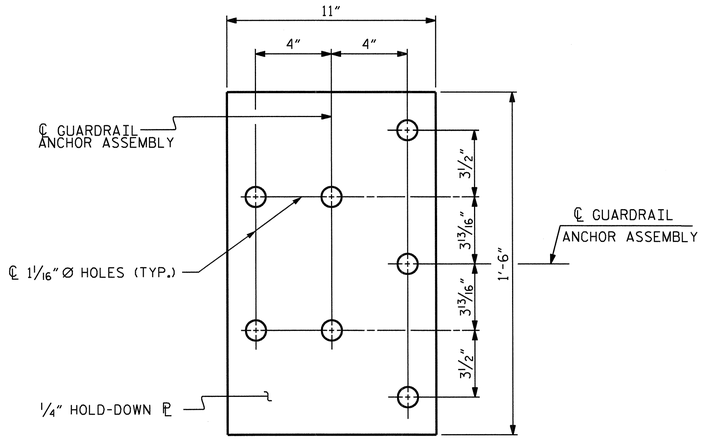

PLAN

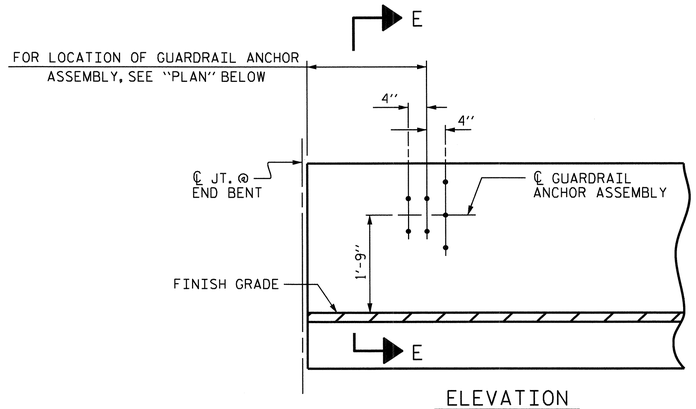

ELEVATION

NOTES

THE GUARDRAIL ANCHOR ASSEMBLY SHALL CONSIST OF A 1/4" HOLD DOWN PLATE AND 7 - 7/8" Ø BOLTS WITH NUTS AND WASHERS.

THE HOLD-DOWN PLATE SHALL CONFORM TO AASHTO M270 GRADE 36. AFTER FABRICATION, THE HOLD-DOWN PLATE SHALL BE HOT-DIP GALVANIZED IN ACCORDANCE WITH AASHTO M111.

BOLTS SHALL CONFORM TO THE REQUIREMENTS OF ASTM A307 AND NUTS SHALL CONFORM TO THE REQUIREMENTS OF AASHTO M291. BOLTS, NUTS AND WASHERS SHALL BE GALVANIZED. (AT THE CONTRACTOR'S OPTION, STAINLESS STEEL BOLTS, NUTS AND WASHERS MAY BE USED AS AN ALTERNATE FOR THE 7/8" Ø GALVANIZED BOLTS, NUTS AND WASHERS. THEY SHALL CONFORM TO OR EXCEED THE MECHANICAL REQUIREMENTS OF ASTM A307. THE USE OF THIS ALTERNATE SHALL BE APPROVED BY THE ENGINEER.)

THE GUARDRAIL ANCHOR ASSEMBLY IS REQUIRED AT ALL POINTS WHERE APPROACH GUARDRAIL IS TO BE ATTACHED TO THE END OF BARRIER RAIL. FOR POINTS OF ATTACHMENT, SEE SKETCH.

AFTER INSTALLATION, THE EXPOSED THREAD OF THE BOLT SHALL BE BURRED WITH A SHARP POINTED TOOL.

THE COST OF THE GUARDRAIL ANCHOR ASSEMBLY SHALL BE INCLUDED IN THE UNIT CONTRACT PRICE BID FOR VERTICAL CONCRETE BARRIER RAIL.

THE VERTICAL REINFORCING BARS MAY BE SHIFTED SLIGHTLY IN THE VERTICAL CONCRETE BARRIER RAIL TO CLEAR ASSEMBLY BOLTS.

THE 1 1/4" Ø HOLES SHALL BE FORMED OR DRILLED WITH A CORE BIT. IMPACT TOOLS WILL NOT BE PERMITTED. ANY CONCRETE DAMAGED BY THIS WORK SHALL BE REPAIRED TO THE SATISFACTION OF THE ENGINEER.

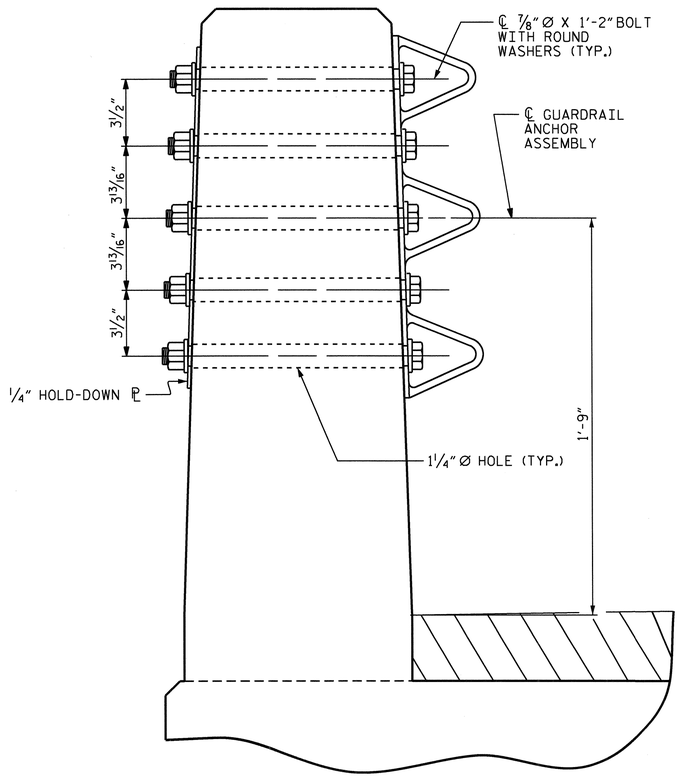

SECTION E-E

GUARDRAIL ANCHOR ASSEMBLY DETAILS

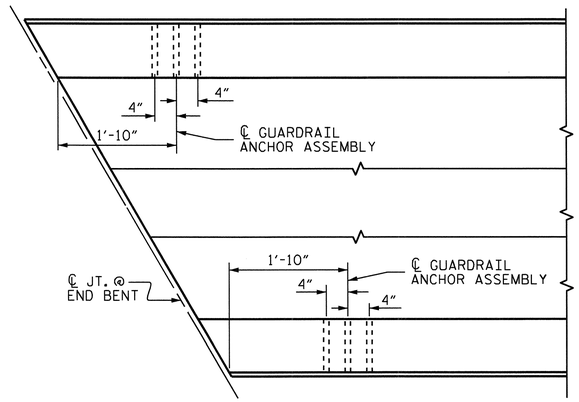

PLAN

LOCATION OF ANCHORS FOR GUARDRAIL

END BENT #1 SHOWN, END BENT #2 SIMILAR.

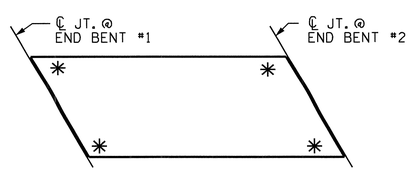

SKETCH SHOWING POINTS OF ATTACHMENT

✳ DENOTES GUARDRAIL ANCHOR ASSEMBLY

PROJECT NO. B-4464

CHOWAN COUNTY

STATION: 12+12.50 -L-

STATE OF NORTH CAROLINA
DEPARTMENT OF TRANSPORTATION
RALEIGH

STANDARD
GUARDRAIL ANCHORAGE FOR VERTICAL CONCRETE BARRIER RAIL

REVISIONS						SHEET NO.
NO.	BY:	DATE:	NO.	BY:	DATE:	14
1			3			TOTAL SHEETS
2			4			25

ASSEMBLED BY : K. P. SEDAI	DATE : 9/1/11
CHECKED BY : D. R. CALHOUN	DATE : 10/17/11
DRAWN BY : MAA 5/10	ADDED 5/6/10
CHECKED BY : GM 5/10	

NORTH CAROLINA PROFESSIONAL SEAL 14855 ENGINEER DOUGLAS R. CALHOUN 10-24-11

24-OCT-2011 13:34
P:\Structures\ksedai\NCBDS\B-4464_Super_Sub_Str.dgn
ksedai

(SHT 3) STD. NO. GRA3

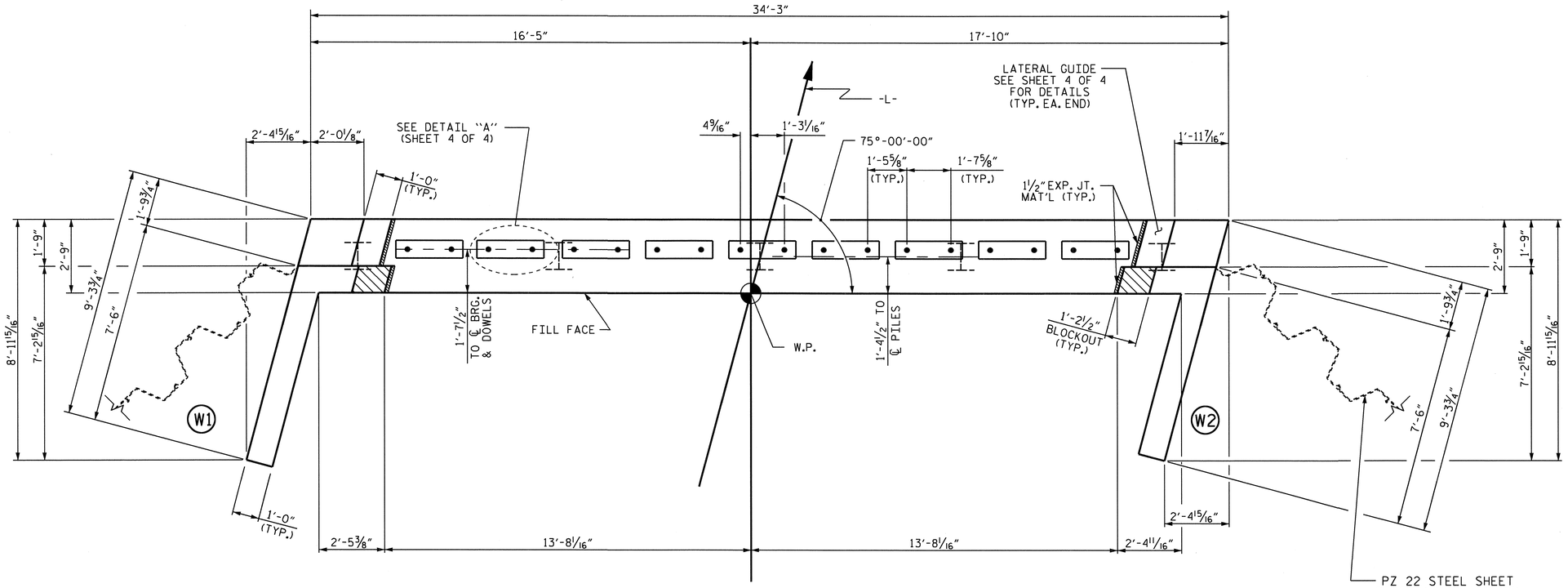

PLAN

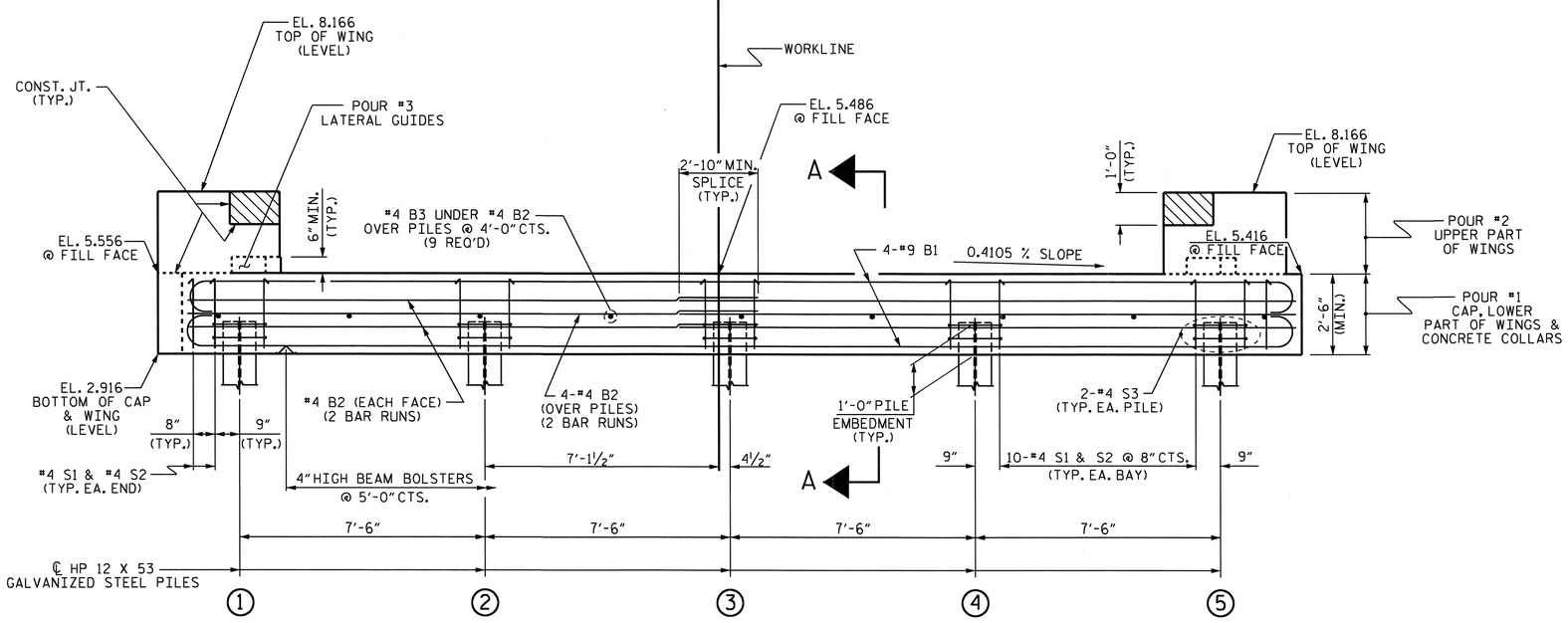

ELEVATION

WINGS NOT SHOWN FOR CLARITY.
FOR SECTION A-A, SEE SHEET 4 OF 4.
CONCRETE COLLARS FOR STEEL PILES NOT SHOWN IN PLAN AND ELEVATION VIEWS FOR CLARITY.
SEE "CORROSION PROTECTION FOR STEEL PILES DETAIL", SHEET 4 OF 4.

NOTES

STIRRUPS IN CAP MAY BE SHIFTED AS NECESSARY TO CLEAR DOWELS.

THE LATERAL GUIDES ARE NOT TO BE POURED UNTIL AFTER THE CORED SLAB UNITS ARE IN PLACE.

THE CONCRETE IN THE SHADED AREA OF THE WING SHALL BE POURED AFTER THE VERTICAL CONCRETE BARRIER RAIL IS CAST IF SLIP FORMING IS USED.

FOR PILE SPLICE DETAILS, SEE SHEET 4 OF 4.

FOR WING DETAILS, SEE SHEET 3 OF 4.

THE CONTRACTOR HAS THE OPTION TO OMIT THE LATERAL GUIDE IF APPROVED BY THE ENGINEER.

GALVANIZE THE FULL LENGTH OF EACH END BENT PILE IN ACCORDANCE WITH SECTION 1076 OF THE STANDARD SPECIFICATIONS.

PROJECT NO. B-4464
CHOWAN COUNTY
STATION: 12+12.50 -L-

SHEET 1 OF 4

STATE OF NORTH CAROLINA
DEPARTMENT OF TRANSPORTATION
RALEIGH

SUBSTRUCTURE

END BENT No. 1

REVISIONS						SHEET NO.
NO.	BY:	DATE:	NO.	BY:	DATE:	15
1			3			TOTAL SHEETS
2			4			25

NORTH CAROLINA PROFESSIONAL SEAL 14855 ENGINEER DOUGLAS R. CALHOUN
10-24-11

ASSEMBLED BY : K. P. SEDAI DATE : 9/6/11
CHECKED BY : D. R. CALHOUN DATE : 10/17/11
DRAWN BY : DGE 03/10
CHECKED BY : MKT 03/10

24-OCT-2011 13:35
P:\Structures\ksedai\NCBDS\B-4464_Super_Sub_Str.dgn
ksedai

STD. NO. EB_27_75S

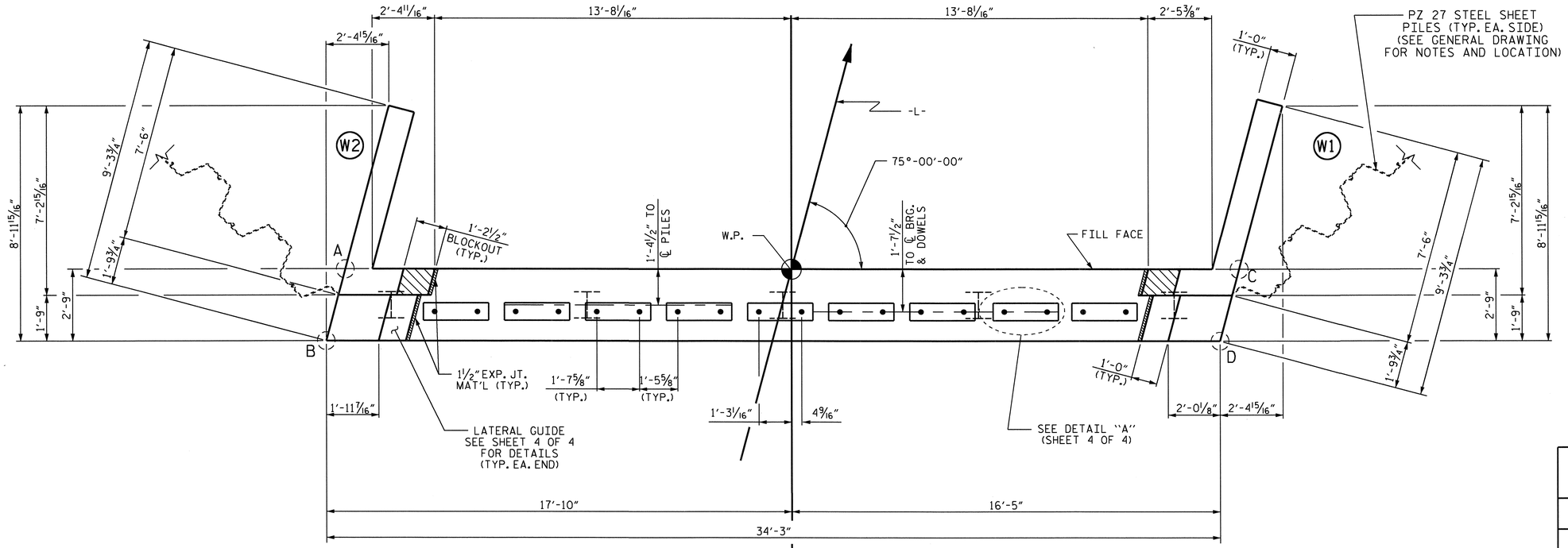

PLAN

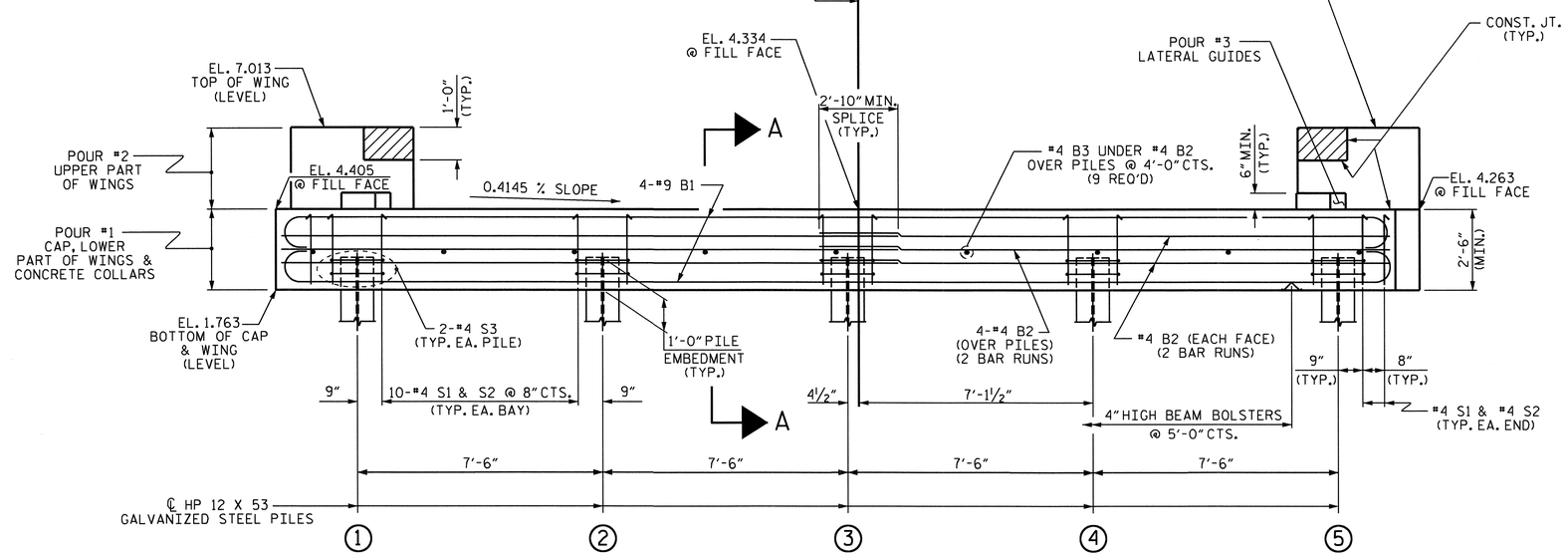

ELEVATION

WINGS NOT SHOWN FOR CLARITY.
FOR SECTION A-A, SEE SHEET 4 OF 4.
CONCRETE COLLARS FOR STEEL PILES NOT SHOWN IN PLAN AND ELEVATION VIEWS FOR CLARITY.
SEE "CORROSION PROTECTION FOR STEEL PILES DETAIL", SHEET 4 OF 4.

NOTES

STIRRUPS IN CAP MAY BE SHIFTED AS NECESSARY TO CLEAR DOWELS.

THE LATERAL GUIDES ARE NOT TO BE POURED UNTIL AFTER THE CORED SLAB UNITS ARE IN PLACE.

THE CONCRETE IN THE SHADED AREA OF THE WING SHALL BE POURED AFTER THE VERTICAL CONCRETE BARRIER RAIL IS CAST IF SLIP FORMING IS USED.

FOR PILE SPLICE DETAILS, SEE SHEET 4 OF 4.

FOR WING DETAILS, SEE SHEET 3 OF 4.

THE CONTRACTOR HAS THE OPTION TO OMIT THE LATERAL GUIDE IF APPROVED BY THE ENGINEER.

GALVANIZE THE FULL LENGTH OF EACH END BENT PILE IN ACCORDANCE WITH SECTION 1076 OF THE STANDARD SPECIFICATIONS.

TOP OF CAP ELEVATIONS	
A	4.405
B	4.499
C	4.263
D	4.357
WP	4.334

ASSEMBLED BY : K. P. SEDAI	DATE : 9/6/11		
CHECKED BY : D. R. CALHOUN	DATE : 10/17/11		
DRAWN BY : DGE	03/10		
CHECKED BY : MKT	03/10		

24-OCT-2011 13:35
P:\Structures\ksedai\NCBDS\B-4464_Super_Sub_Str.dgn
ksedai

NORTH CAROLINA PROFESSIONAL SEAL 14855 ENGINEER DOUGLAS R. CALHOUN
10-24-11

PROJECT NO. B-4464
CHOWAN COUNTY
STATION: 12+12.50 -L-

SHEET 2 OF 4

STATE OF NORTH CAROLINA
DEPARTMENT OF TRANSPORTATION
RALEIGH

SUBSTRUCTURE

END BENT No. 2

REVISIONS						SHEET NO.
NO.	BY:	DATE:	NO.	BY:	DATE:	16
1			3			TOTAL SHEETS
2			4			25

STD. NO. EB_27_75S

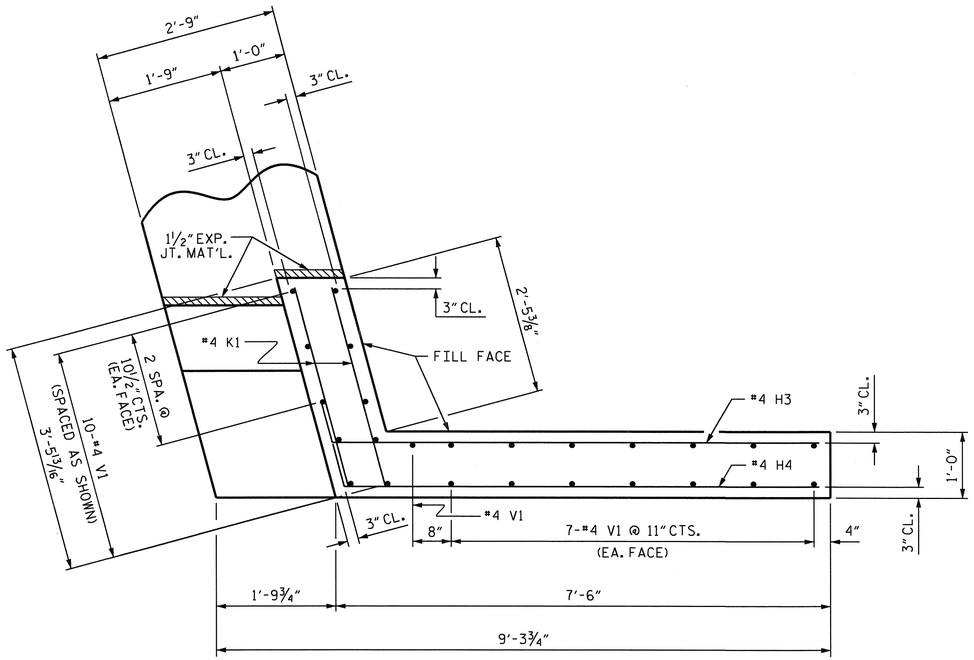

PLAN OF WING (W1)

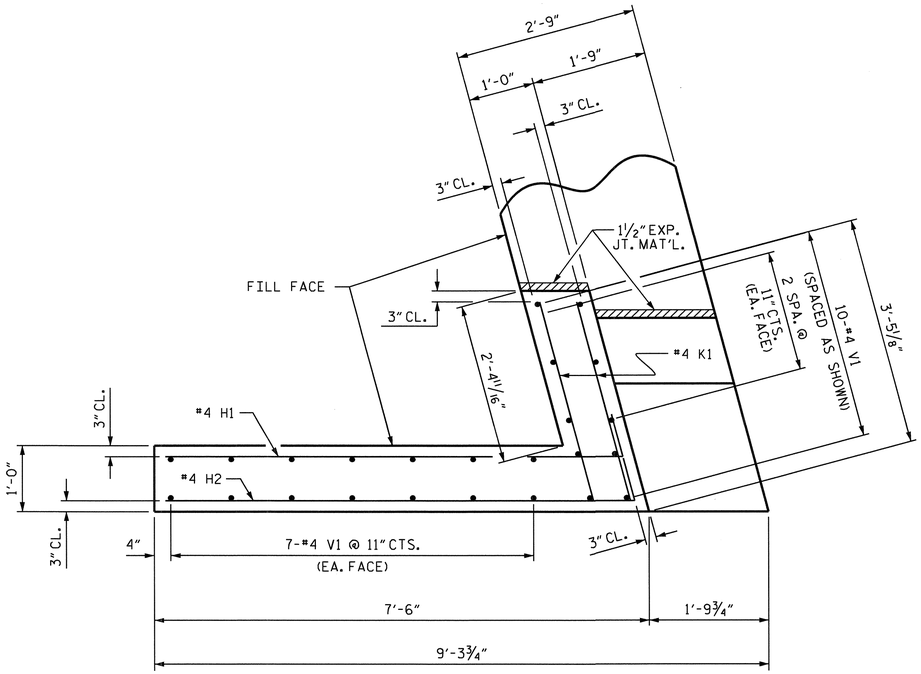

PLAN OF WING (W2)

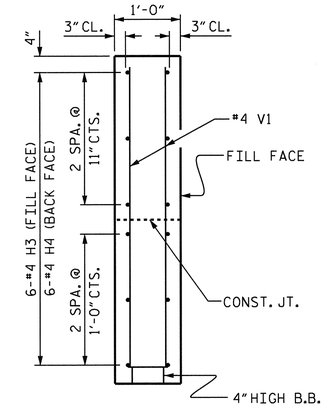

SECTION X-X

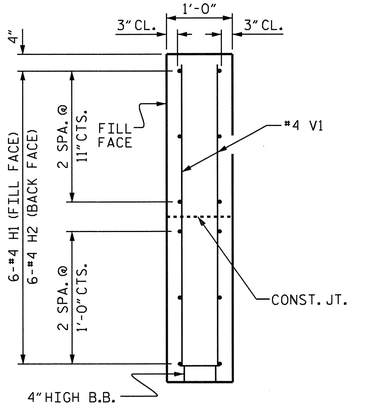

SECTION Y-Y

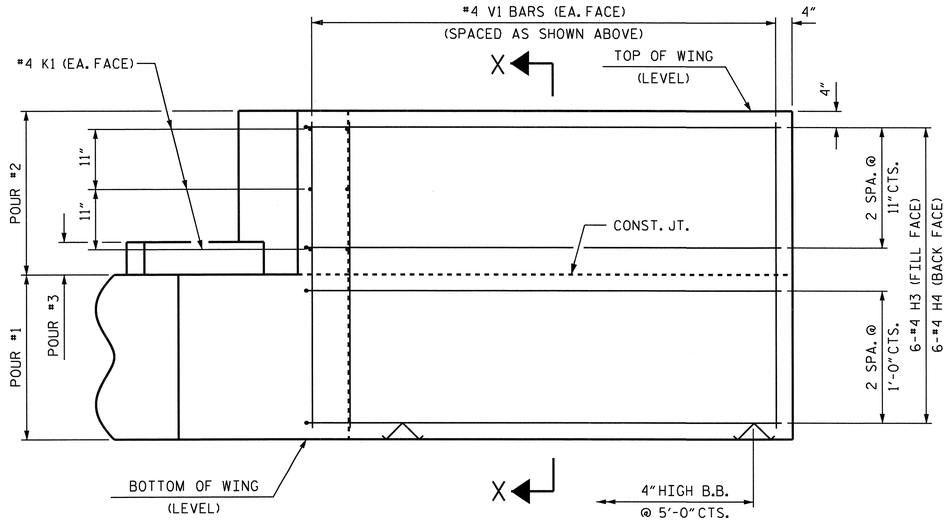

ELEVATION OF WING (W1)

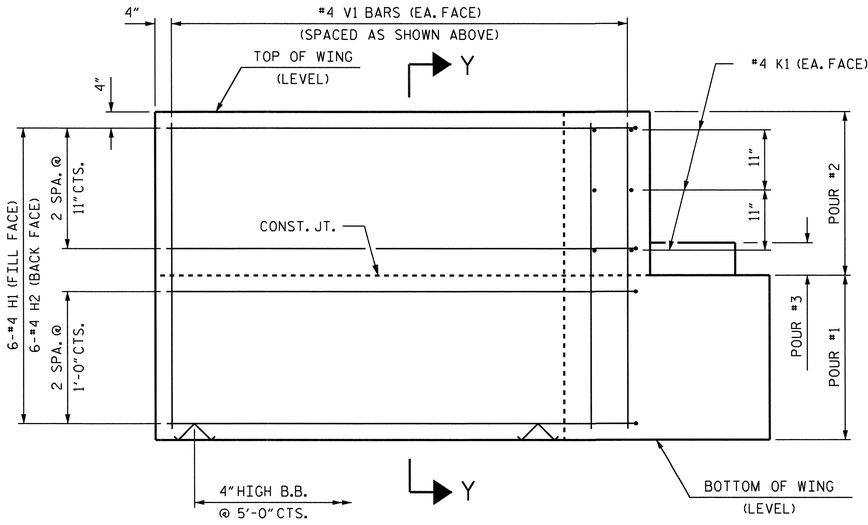

ELEVATION OF WING (W2)

WING DETAILS

ASSEMBLED BY : K. P. SEDAI	DATE : 9/6/11
CHECKED BY : D. R. CALHOUN	DATE : 10/17/11
DRAWN BY : DGE 03/10	
CHECKED BY : MKT 03/10	

24-OCT-2011 13:41
P:\Structures\ksedal\NCBDS\B-4464_Super_Sub_Str.dgn
ksedal

NORTH CAROLINA PROFESSIONAL SEAL 14855 ENGINEER DARLAS R. CALHOUN
10-24-11

PROJECT NO. B-4464
CHOWAN COUNTY
STATION: 12+12.50 -L-

SHEET 3 OF 4

STATE OF NORTH CAROLINA
DEPARTMENT OF TRANSPORTATION
RALEIGH

SUBSTRUCTURE
END BENT
WING DETAILS

REVISIONS						SHEET NO.
NO.	BY:	DATE:	NO.	BY:	DATE:	17
1			3			TOTAL SHEETS
2			4			25

STD. NO. EB_27_75S

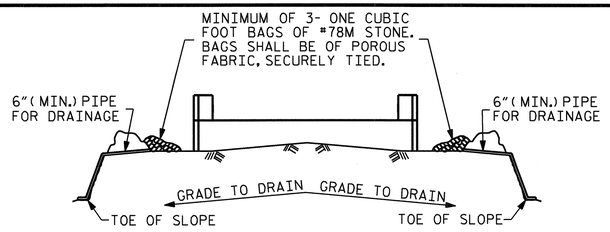

BAGGED STONE AND PIPE SHALL BE PLACED IMMEDIATELY AFTER COMPLETION OF END BENT EXCAVATION. PIPE MAY BE EITHER CONCRETE, CORRUGATED STEEL, CORRUGATED ALUMINUM ALLOY, OR CORRUGATED PLASTIC. PERFORATED PIPE WILL NOT BE ALLOWED.

BAGGED STONE SHALL REMAIN IN PLACE UNTIL THE ENGINEER DIRECTS THAT IT BE REMOVED. THE CONTRACTOR SHALL REMOVE AND DISPOSE OF SILT ACCUMULATIONS AT BAGGED STONE WHEN SO DIRECTED BY THE ENGINEER. BAGS SHALL BE REMOVED AND REPLACED WHENEVER THE ENGINEER DETERMINES THAT THEY HAVE DETERIORATED AND LOST THEIR EFFECTIVENESS.

NO SEPARATE PAYMENT WILL BE MADE FOR THIS WORK AND THE ENTIRE COST OF THIS WORK SHALL BE INCLUDED IN THE UNIT CONTRACT PRICE BID FOR THE SEVERAL PAY ITEMS.

TEMPORARY DRAINAGE AT END BENT

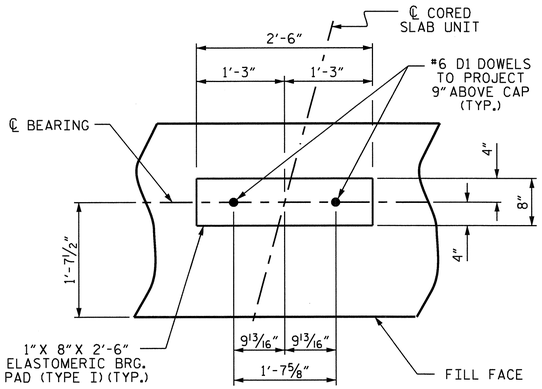

DETAIL "A"

(END BENT No. 1 SHOWN, END BENT No. 2 SIMILAR BY ROTATION)

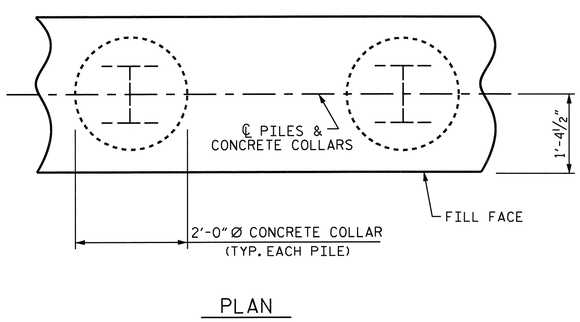

PLAN

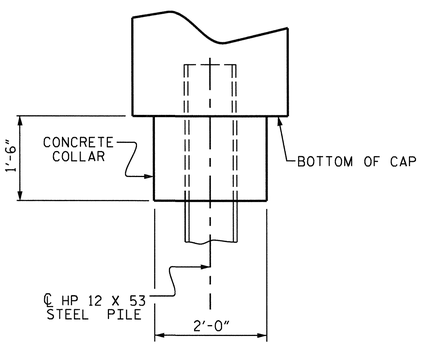

ELEVATION

CORROSION PROTECTION FOR STEEL PILES DETAIL

(END BENT No. 1 SHOWN, END BENT No. 2 SIMILAR BY ROTATION)

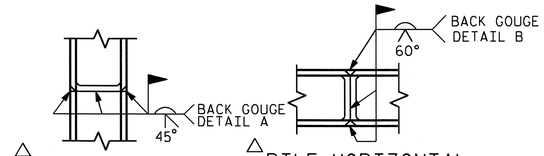

△ PILE VERTICAL

△ PILE HORIZONTAL OR VERTICAL

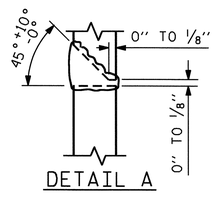

DETAIL A

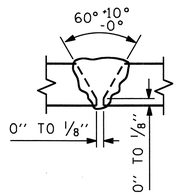

DETAIL B

△ POSITION OF PILE DURING WELDING.

PILE SPLICE DETAILS

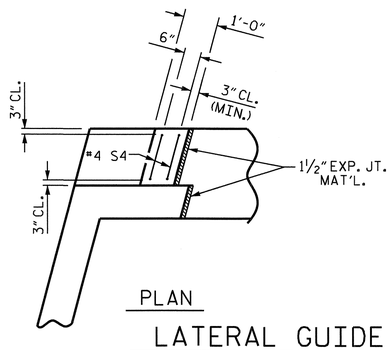

PLAN

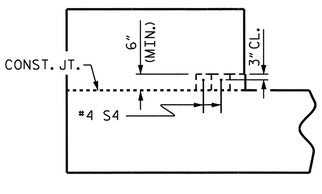

ELEVATION

LATERAL GUIDE DETAILS

(END BENT No. 1, LEFT LATERAL GUIDE SHOWN, RIGHT END SIMILAR)
(END BENT No. 2 SIMILAR BY ROTATION)

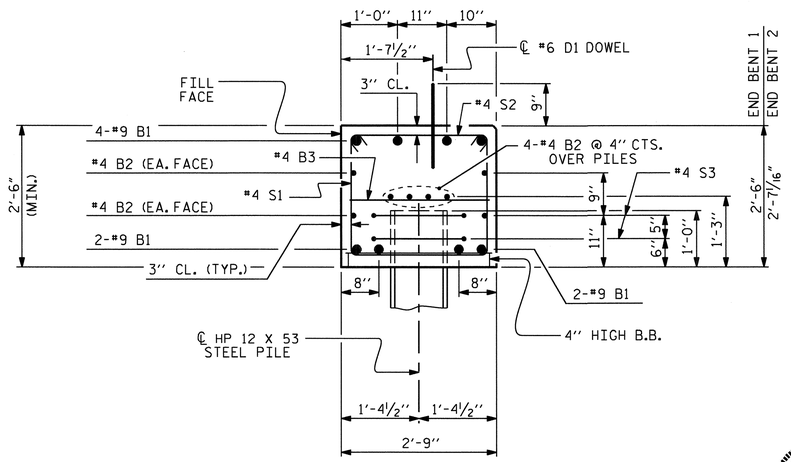

SECTION A-A

(CONCRETE COLLAR NOT SHOWN FOR CLARITY.
SEE "CORROSION PROTECTION FOR STEEL PILES DETAIL.")

BAR TYPES

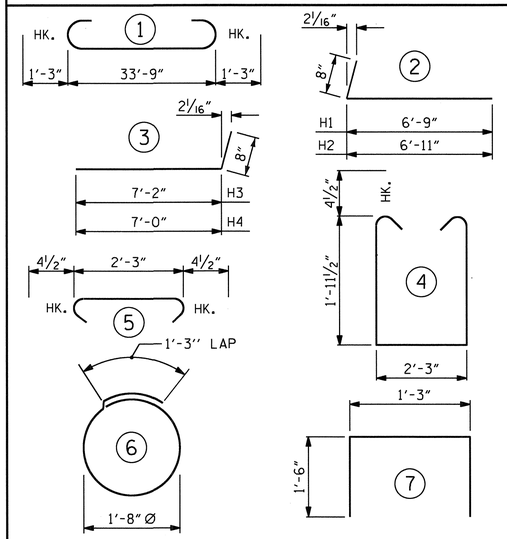

ALL BAR DIMENSIONS ARE OUT TO OUT.

END BENT No. 1	END BENT No. 2
HP 12 X 53 GALVANIZED STEEL PILES	HP 12 X 53 GALVANIZED STEEL PILES
NO: 5 LIN. FT. = 325	NO: 5 LIN. FT. = 325
PZ-22 STEEL SHEET PILES SQ. FT. = 182	PZ-27 STEEL SHEET PILES SQ. FT. = 672

BILL OF MATERIAL

FOR ONE END BENT

BAR	NO.	SIZE	TYPE	LENGTH	WEIGHT
*B1	8	#9	1	36'-3"	986
*B2	16	#4	STR	18'-4"	196
*B3	9	#4	STR	2'-3"	14
*D1	18	#6	STR	1'-6"	41
*H1	6	#4	2	7'-5"	30
*H2	6	#4	2	7'-7"	30
*H3	6	#4	3	7'-10"	31
*H4	6	#4	3	7'-8"	31
*K1	12	#4	STR	2'-9"	22
*S1	44	#4	4	6'-11"	203
*S2	44	#4	5	3'-0"	88
*S3	10	#4	6	6'-6"	43
*S4	4	#4	7	4'-3"	11
*V1	49	#4	STR	4'-9"	155

*EPOXY COATED REINFORCING STEEL (FOR ONE END BENT) 1881 LBS.

CLASS AA CONCRETE BREAKDOWN (FOR ONE END BENT)

POUR #1	CAP, LOWER PART OF WINGS & COLLARS	10.8 C.Y.
POUR #2	UPPER PART OF WINGS	2.0 C.Y.
POUR #3	LATERAL GUIDES	0.1 C.Y.
TOTAL CLASS AA CONCRETE		12.9 C.Y.

PROJECT NO. B-4464
CHOWAN COUNTY
STATION: 12+12.50 -L-

SHEET 4 OF 4

STATE OF NORTH CAROLINA
DEPARTMENT OF TRANSPORTATION
RALEIGH

SUBSTRUCTURE

END BENT No. 1 & 2 DETAILS

REVISIONS						SHEET NO.
NO.	BY:	DATE:	NO.	BY:	DATE:	18
1			3			TOTAL SHEETS
2			4			25

NORTH CAROLINA PROFESSIONAL SEAL 14855 ENGINEER DOUGLAS R. CALHOUN
10-24-11

ASSEMBLED BY : K. P. SEDAI	DATE : 9/6/11
CHECKED BY : D. R. CALHOUN	DATE : 10/17/11
DRAWN BY : DGE 03/10	
CHECKED BY : MKT 03/10	

24-OCT-2011 13:35
P:\Structures\ksedai\NCBDS\B-4464_Super_Sub_Str.dgn
ksedai

STD. NO. EB_27_75S

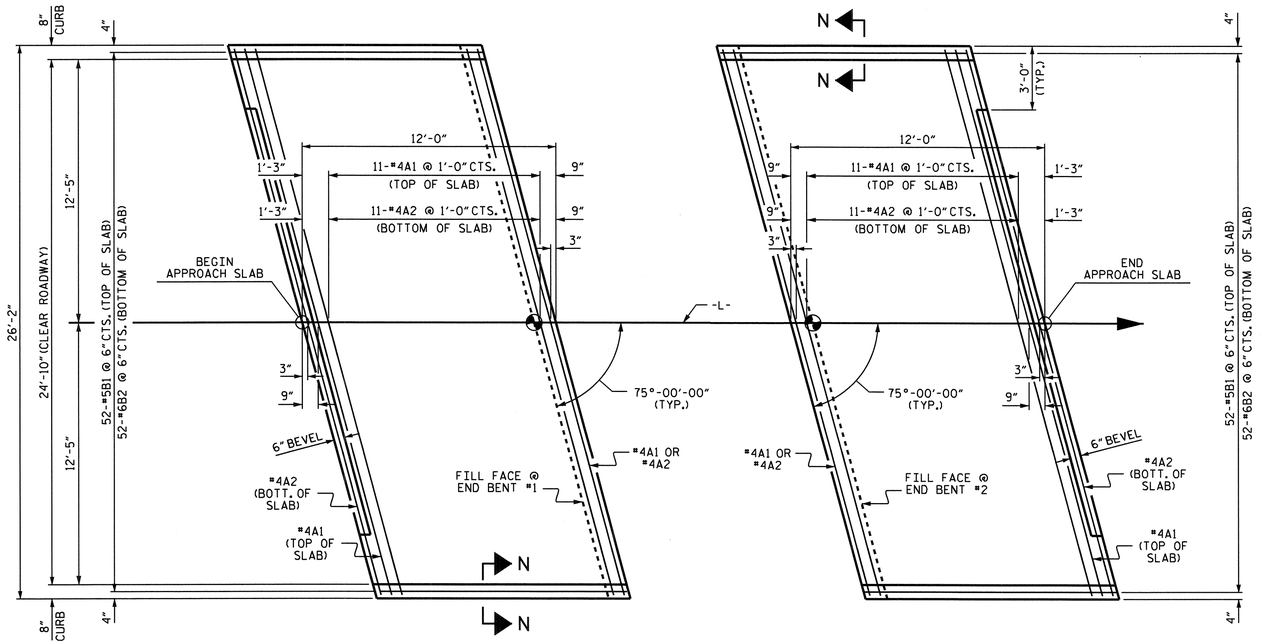

PLAN @ END BENT #1

PLAN @ END BENT #2

DIMENSIONS SHOWN ARE TYPICAL FOR BOTH APPROACH SLABS

NOTES

FOR REINFORCED BRIDGE APPROACH FILL INCLUDING FABRIC, IMPERMEABLE GEOMEMBRANE, 4" Ø DRAINAGE PIPE, #78M STONE, AND SELECT MATERIAL, SEE ROADWAY PLANS.

AREA BETWEEN THE WINGWALL AND APPROACH SLAB SHALL BE GRADED TO DRAIN THE WATER AWAY FROM THE FILL FACE OF THE BRIDGE AND SHALL BE PAVED. SEE ROADWAY PLANS.

THE 6" COMP. A.B.C. SHALL BE FLUSH WITH THE ROADWAY END OF THE APPROACH SLAB AND SHALL EXTEND 1'-0" OUTSIDE OF EACH EDGE OF THE APPROACH SLAB.

THE CONTRACTOR MAY USE 4" TYPE B-25.0B ASPHALT CONCRETE BASE COURSE IN LIEU OF 6" COMP. A.B.C. IF THIS OPTION IS USED, THE BASE COURSE SHALL BE FLUSH WITH THE ROADWAY END OF THE APPROACH SLAB, AND THE WIDTH SHALL BE THE SAME AS THAT OF THE APPROACH SLAB.

THE CONTRACTOR MAY USE 5" CLASS "A" CONCRETE BASE IN LIEU OF 6" COMP. A.B.C. IF THIS OPTION IS USED, THE CONCRETE BASE SHALL BE FLUSH WITH THE ROADWAY END OF THE APPROACH SLAB, AND THE WIDTH SHALL BE THE SAME AS THAT OF THE APPROACH SLAB. THE CONCRETE SHALL BE FINISHED TO A SMOOTH SURFACE AND A LAYER OF 30 LB ROOFING FELT SHALL BE PLACED BETWEEN THE CONCRETE BASE AND THE APPROACH SLAB TO PREVENT BOND. THE APPROACH SLAB SHALL NOT BE CAST UNTIL THE CONCRETE BASE HAS REACHED AN AGE OF THREE CURING DAYS.

FOR JOINT DETAILS, SEE "PRESTRESSED CONCRETE CORED SLAB UNIT" SHEETS.

THE JOINT AT THE END BENT SHALL BE GROUTED AS SOON AS PRACTICAL AFTER THE CONSTRUCTION OF THE APPROACH SLABS.

APPROACH SLAB GROOVING IS NOT REQUIRED.

BILL OF MATERIAL

APPROACH SLAB AT EB #1

BAR	NO.	SIZE	TYPE	LENGTH	WEIGHT
* A1	13	#4	STR	26'-8"	232
* A2	13	#4	STR	26'-8"	232
* B1	52	#5	STR	11'-1"	601
* B2	52	#6	STR	11'-7"	905
* EPOXY COATED REINFORCING STEEL				LBS.	1970
CLASS AA CONCRETE				C.Y.	15.9

APPROACH SLAB AT EB #2

BAR	NO.	SIZE	TYPE	LENGTH	WEIGHT
* A1	13	#4	STR	26'-8"	232
* A2	13	#4	STR	26'-8"	232
* B1	52	#5	STR	11'-1"	601
* B2	52	#6	STR	11'-7"	905
* EPOXY COATED REINFORCING STEEL				LBS.	1970
CLASS AA CONCRETE				C.Y.	15.9

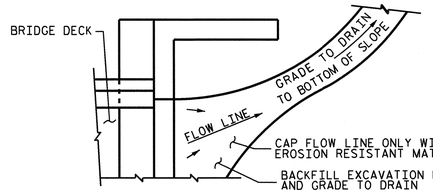

NOTE: IF THE APPROACH SLAB IS NOT CONSTRUCTED IMMEDIATELY AFTER THE BACKFILLING OF THE END BENT EXCAVATION, GRADE TO DRAIN TO THE BOTTOM OF THE SLOPE AND PROVIDE EROSION RESISTANT MATERIAL, SUCH AS FIBERGLASS ROVING OR AS DIRECTED BY THE ENGINEER TO PREVENT SOIL EROSION AND TO PROTECT THE AREA ADJACENT TO THE STRUCTURE. THE CONTRACTOR WILL BE REQUIRED TO REMOVE THESE MATERIALS PRIOR TO CONSTRUCTION OF THE APPROACH SLAB.

TEMPORARY DRAINAGE DETAIL

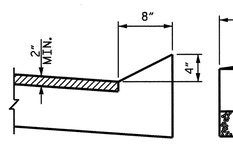

SECTION N-N

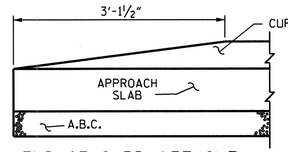

END OF CURB WITHOUT SHOULDER BERM GUTTER

CURB DETAILS

SPLICE LENGTHS

BAR SIZE	EPOXY COATED	UNCOATED
#4	2'-0"	1'-9"
#5	2'-6"	2'-2"
#6	3'-10"	2'-7"

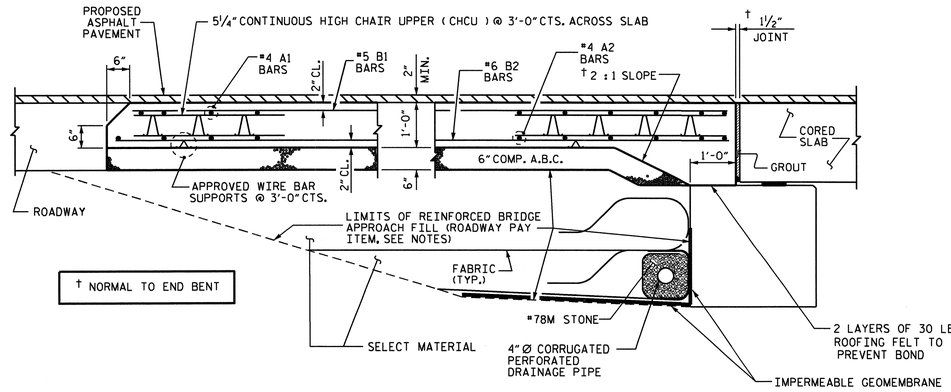

SECTION THRU SLAB

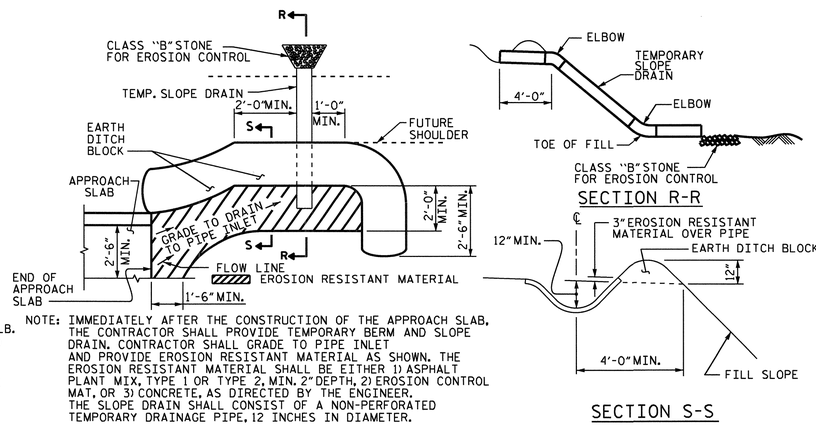

NOTE: IMMEDIATELY AFTER THE CONSTRUCTION OF THE APPROACH SLAB, THE CONTRACTOR SHALL PROVIDE TEMPORARY BERM AND SLOPE DRAIN. CONTRACTOR SHALL GRADE TO PIPE INLET AND PROVIDE EROSION RESISTANT MATERIAL AS SHOWN. THE EROSION RESISTANT MATERIAL SHALL BE EITHER 1) ASPHALT PLANT MIX, TYPE 1 OR TYPE 2, MIN. 2" DEPTH, 2) EROSION CONTROL MAT, OR 3) CONCRETE, AS DIRECTED BY THE ENGINEER. THE SLOPE DRAIN SHALL CONSIST OF A NON-PERFORATED TEMPORARY DRAINAGE PIPE, 12 INCHES IN DIAMETER.

PLAN VIEW

SECTION S-S

TEMPORARY BERM AND SLOPE DRAIN DETAILS

(TO BE USED WHEN SHOULDER BERM GUTTER IS REQUIRED)

BRIDGE NO. B-4464

CHOWAN COUNTY

STATION: 12+12.50 -L-

STATE OF NORTH CAROLINA
DEPARTMENT OF TRANSPORTATION
RALEIGH

STANDARD
BRIDGE APPROACH SLAB
FOR PRESTRESSED CONCRETE
CORED SLAB UNIT
(SUB-REGIONAL TIER)
75° SKEW

NORTH CAROLINA PROFESSIONAL SEAL 14855 ENGINEER DOUGLAS R. CALHOUN 10-24-11

REVISIONS						SHEET NO.
NO.	BY:	DATE:	NO.	BY:	DATE:	19
1			3			TOTAL SHEETS
2			4			25

ASSEMBLED BY : K. P. SEDAI	DATE : 9/1/11
CHECKED BY : D. R. CALHOUN	DATE : 10/17/11
DRAWN BY : SHS/MAA 5-09	
CHECKED BY : BCH 5-09	

24-OCT-2011 13:35
P:\Structures\ksedai\NCBDS\B-4464_Super_Sub_Str.dgn
ksedai

STD. NO. BAS_27_75S

STANDARD NOTES

DESIGN DATA:

SPECIFICATIONS	A.A.S.H.T.O. (CURRENT)
LIVE LOAD	SEE PLANS
IMPACT ALLOWANCE	SEE A.A.S.H.T.O.
STRESS IN EXTREME FIBER OF	
STRUCTURAL STEEL - AASHTO M270 GRADE 36	20,000 LBS. PER SQ. IN.
- AASHTO M270 GRADE 50W	27,000 LBS. PER SQ. IN.
- AASHTO M270 GRADE 50	27,000 LBS. PER SQ. IN.
REINFORCING STEEL IN TENSION	
GRADE 60	24,000 LBS. PER SQ. IN.
CONCRETE IN COMPRESSION	1,200 LBS. PER SQ. IN.
CONCRETE IN SHEAR	SEE A.A.S.H.T.O.
STRUCTURAL TIMBER - TREATED OR	
UNTREATED - EXTREME FIBER STRESS	1,800 LBS. PER SQ. IN.
COMPRESSION PERPENDICULAR TO GRAIN OF TIMBER	375 LBS. PER SQ. IN.
EQUIVALENT FLUID PRESSURE OF EARTH	30 LBS. PER CU. FT. (MINIMUM)

MATERIAL AND WORKMANSHIP:

EXCEPT AS MAY OTHERWISE BE SPECIFIED ON PLANS OR IN THE SPECIAL PROVISIONS, ALL MATERIAL AND WORKMANSHIP SHALL BE IN ACCORDANCE WITH THE 2006 "STANDARD SPECIFICATIONS FOR ROADS AND STRUCTURES" OF THE N. C. DEPARTMENT OF TRANSPORTATION.

STEEL SHEET PILING FOR PERMANENT OR TEMPORARY APPLICATIONS SHALL BE HOT ROLLED.

CONCRETE:

UNLESS OTHERWISE REQUIRED ON PLANS, CLASS A CONCRETE SHALL BE USED FOR ALL PORTIONS OF ALL STRUCTURES WITH THE EXCEPTION THAT: CLASS AA CONCRETE SHALL BE USED IN BRIDGE SUPERSTRUCTURES, ABUTMENT BACKWALLS, AND APPROACH SLABS; AND CLASS B CONCRETE SHALL BE USED FOR SLOPE PROTECTION AND RIP RAP.

CONCRETE CHAMFERS:

UNLESS OTHERWISE NOTED ON THE PLANS, ALL EXPOSED CORNERS ON STRUCTURES SHALL BE CHAMFERED 3/4" WITH THE FOLLOWING EXCEPTIONS: TOP CORNERS OF CURBS MAY BE ROUNDED TO 1-1/2" RADIUS WHICH IS BUILT INTO CURB FORMS; CORNERS OF TRANSVERSE FLOOR EXPANSION JOINTS SHALL BE ROUNDED WITH A 1/4" FINISHING TOOL UNLESS OTHERWISE REQUIRED ON PLANS; AND CORNERS OF EXPANSION JOINTS IN THE ROADWAY FACES AND TOPS OF CURBS AND SIDEWALKS SHALL BE ROUNDED TO A 1/4" RADIUS WITH A FINISHING STONE OR TOOL UNLESS OTHERWISE REQUIRED ON PLANS.

DOWELS:

DOWELS WHEN INDICATED ON PLANS AS FOR CULVERT EXTENSIONS, SHALL BE EMBEDDED AT LEAST 12" INTO THE OLD CONCRETE AND GROUTED INTO PLACE WITH 1:2 CEMENT MORTAR.

ALLOWANCE FOR DEAD LOAD DEFLECTION, SETTLEMENT, ETC. IN CASTING SUPERSTRUCTURES:

BRIDGES SHALL BE BUILT ON THE GRADE OR VERTICAL CURVE SHOWN ON PLANS. SLABS, CURBS AND PARAPETS SHALL CONFORM TO THE GRADE OR CURVE.

ALL DIMENSIONS WHICH ARE GIVEN IN SECTION AND ARE AFFECTED BY DEAD LOAD DEFLECTIONS ARE DIMENSIONS AT CENTER LINE OF BEARING UNLESS OTHERWISE NOTED ON PLANS. IN SETTING FORMS FOR STEEL BEAM BRIDGES AND PRESTRESSED CONCRETE GIRDER BRIDGES, ADJUSTMENTS SHALL BE MADE DUE TO THE DEAD LOAD DEFLECTIONS FOR THE ELEVATIONS SHOWN. WHERE BLOCKS ARE SHOWN OVER BEAMS FOR BUILDING UP TO THE SLAB, THE VERTICAL DIMENSIONS OF THE BLOCKS SHALL BE ADJUSTED BETWEEN BEARINGS TO COMPENSATE FOR DEAD LOAD DEFLECTIONS, VERTICAL CURVE ORDINATE, AND ACTUAL BEAM CAMBER. WHERE BOTTOM OF SLAB IS IN LINE WITH BOTTOM OF TOP FLANGES, DEPTH OF SLAB BETWEEN BEARINGS SHALL BE ADJUSTED TO COMPENSATE FOR DEAD LOAD DEFLECTION, VERTICAL CURVE ORDINATE, AND ACTUAL BEAM CAMBER.

IN SETTING FALSEWORK AND FORMS FOR REINFORCED CONCRETE SPANS, AN ALLOWANCE SHALL BE MADE FOR DEAD LOAD DEFLECTIONS, SETTLEMENT OF FALSEWORK, AND PERMANENT CAMBER WHICH SHALL BE PROVIDED FOR IN ADDITION TO THE ELEVATIONS SHOWN. AFTER REMOVAL OF THE FALSEWORK, THE FINISHED STRUCTURES SHALL CONFORM TO THE PROFILE AND ELEVATIONS SHOWN ON THE PLANS AND CONSTRUCTION ELEVATIONS FURNISHED BY THE ENGINEER.

DETAILED DRAWINGS FOR FALSEWORK OR FORMS FOR BRIDGE SUPERSTRUCTURE AND ANY STRUCTURE OR PARTS OF A STRUCTURE AS NOTED ON THE PLANS SHALL BE SUBMITTED TO THE ENGINEER FOR APPROVAL BEFORE CONSTRUCTION OF THE FALSEWORK OR FORMS IS STARTED.

REINFORCING STEEL:

ALL REINFORCING STEEL SHALL BE DEFORMED. DIMENSIONS RELATIVE TO PLACEMENT OF REINFORCING ARE TO CENTERS OF BARS UNLESS OTHERWISE INDICATED IN THE PLANS. DIMENSIONS ON BAR DETAILS ARE TO CENTERS OF BARS OR ARE OUT TO OUT AS INDICATED ON PLANS.

WIRE BAR SUPPORTS SHALL BE PROVIDED FOR REINFORCING STEEL WHERE INDICATED ON THE PLANS. WHEN BAR SUPPORT PIECES ARE PLACED IN CONTINUOUS LINES, THEY SHALL BE SO PLACED THAT THE ENDS OF THE SUPPORTING WIRES SHALL BE LAPPED TO LOCK LEGS ON ADJOINING PIECES.

STRUCTURAL STEEL:

AT THE CONTRACTOR'S OPTION, HE MAY SUBSTITUTE 7/8" Ø SHEAR STUDS FOR THE 3/4" Ø STUDS SPECIFIED ON THE PLANS. THIS SUBSTITUTION SHALL BE MADE AT THE RATE OF 3 - 7/8" Ø STUDS FOR 4 - 3/4" Ø STUDS, AND STUD SPACING CHANGES SHALL BE MADE AS NECESSARY TO PROVIDE THE SAME EQUIVALENT NUMBER OF 7/8" Ø STUDS ALONG THE BEAM AS SHOWN FOR 3/4" Ø STUDS BASED ON THE RATIO OF 3 - 7/8" Ø STUDS FOR 4 - 3/4" Ø STUDS. STUDS OF THE LENGTH SPECIFIED ON THE PLANS MUST BE PROVIDED. THE MAXIMUM SPACING SHALL BE 2'-0".

EXCEPT AT THE INTERIOR SUPPORTS OF CONTINUOUS BEAMS WHERE THE COVER PLATE IS IN CONTACT WITH BEARING PLATE, THE CONTRACTOR MAY, AT HIS OPTION, SUBSTITUTE FOR THE COVER PLATES DESIGNATED ON THE PLANS COVER PLATES OF THE EQUIVALENT AREA PROVIDED THESE PLATES ARE AT LEAST 5/16" IN THICKNESS AND DO NOT EXCEED A WIDTH EQUAL TO THE FLANGE WIDTH LESS 2" OR A THICKNESS EQUAL TO 2 TIMES THE FLANGE THICKNESS. THE SIZE OF FILLET WELDS SHALL CONFORM TO THE REQUIREMENTS OF THE CURRENT ANSI/AASHTO/AWS "BRIDGE WELDING CODE". ELECTROSLAG WELDING WILL NOT BE PERMITTED.

WITH THE SOLE EXCEPTION OF EDGES AT SURFACES WHICH BEAR ON OTHER SURFACES, ALL SHARP EDGES AND ENDS OF SHAPES AND PLATES SHALL BE SLIGHTLY ROUNDED BY SUITABLE MEANS TO A RADIUS OF APPROXIMATELY 1/16 INCH OR EQUIVALENT FLAT SURFACE AT A SUITABLE ANGLE PRIOR TO PAINTING, GALVANIZING, OR METALLIZING.

HANDRAILS AND POSTS:

METAL STANDARDS AND FACES OF THE CONCRETE END POSTS FOR THE METAL RAIL SHALL BE SET NORMAL TO THE GRADE OF THE CURB, UNLESS OTHERWISE SHOWN ON PLANS. THE METAL RAIL AND TOPS OF CONCRETE POSTS USED WITH THE ALUMINUM RAIL SHALL BE BUILT PARALLEL TO THE GRADE OF THE CURB.

METAL HANDRAILS SHALL BE IN ACCORDANCE WITH THE PLANS. RAILS SHALL BE AS MANUFACTURED FOR BRIDGE RAILING. CASTINGS SHALL BE OF A UNIFORM APPEARANCE. FINS AND OTHER DEFORMATIONS RESULTING FROM CASTING OR OTHERWISE SHALL BE REMOVED IN A MANNER SO THAT A UNIFORM COLORING OF THE COMPLETED CASTING SHALL BE OBTAINED. CASTINGS WITH DISCOLORATIONS OR OF NON-UNIFORM COLORING WILL NOT BE ACCEPTED. CERTIFIED MILL REPORTS ARE REQUIRED FOR METAL RAILS AND POSTS.

SPECIAL NOTES:

GENERALLY, IN CASE OF DISCREPANCY, THIS STANDARD SHEET OF NOTES SHALL GOVERN OVER THE SPECIFICATIONS, BUT THE REMAINDER OF THE PLANS SHALL GOVERN OVER NOTES HEREON, AND SPECIAL PROVISIONS SHALL GOVERN OVER ALL. SEE SPECIFICATIONS ARTICLE 105-4.

ENGLISH

JANUARY, 1990

SHEET NO. 20

TOTAL SHEETS 25

STD. NO. SN

REV. 6-16-95 EEM (J) RGW REV. 5-7-03 RWW (J) JTE
REV. 8-16-99 RWW (J) LES REV. 5-1-06 TLA (J) GM

24-OCT-2011 13:34
P:\Structures\ksedal\NCBDS\B-4464_Super_Sub_Str.dgn
ksedal

WBS # 38377.3.1

CONTRACT #

EXISTING BRIDGE No. 35
12'-2" CLEAR ROADWAY
SPANS: 1 @ 21'-0", 1 @ 19'-6"
TIMBER FLOOR ON TIMBER JOISTS
END BENTS & INT. BENT-
TIMBER CAPS ON TIMBER PILES
TIMBER CRUTCH BENTS

TBM: BM#11
RR SPIKE IN 10" MAPLE
37.30' RIGHT OF -L- STA. 13+19.87
ELEV. 2.10

MICHEAL E. OVERTON, JR
DB 300 PG 965
PB 04 PG 53

UNNAMED TRIBUTARY TO EDENTON BAY

72'-3 15/16" TOTAL LENGTH
FILL FACE TO FILL FACE
ALONG ℄ SURVEY -L-

MARINE GRADE SHEET PILES WALL NO. 3

STA. 13+25.16 (PC)

END PAVEMENT
STA. 13+75.00 -L-

BEGIN PAVEMENT
STA. 11+10.00 -L-

BEGIN APPROACH SLAB
STA. 11+65.37 -L-

WOODS

GR LENGTH = 68'-9"
(TYP.)

MARINE GRADE SHEET PILES WALL NO. 1

℄ BRIDGE
STA. 12+12.50 -L-

END APPROACH SLAB
STA. 12+59.63 -L-

CLASS 'B' RIP RAP
1 TON W/ 5 S.Y.
FILTER FABRIC

SLOPE STAKE
LINE (TYP.)

CAPE COLONY ASSOC.
DB 233 PG 721

EXISTING R/W

WLB

EXISTING BRIDGE #35 (REMOVE)

15"

BDI

TO SR 1169

℄ SURVEY -L-
N 22°24'13"E

SR 1170 CANAL DRIVE 18' BST

TO SR 1159

TYPE-350
G.R. ANCHOR
(TYP. U.O.N.)

SHOULDER BERM
GUTTER (TYP.)

75°00'00"
(TYP.)

EB2-B

CFW

CLASS II RIP RAP
W/ FILTER FABRIC
(TYP.)

EXISTING WATER LINE

WORK POINT 1
STA. 11+76.34 -L-

MARINE GRADE SHEET PILES WALL NO. 2

MARINE GRADE SHEET PILES WALL NO. 4

WORK POINT 2
STA. 12+48.66 -L-

PROPOSED WATERLINE

ROBERT V. MAKAR, et ux
DB 234 PG 224
PB 05 PG 18

ROBERT ALLEN BAINES
DB 233 PG 453
PB 04 PG 53

EBB

FLOOD

IS F D

EXISTING UTILITIES TO BE RELOCATED BY OTHERS.

PLAN
SCALE : 1" = 15'

STA. 11+10.00
ELEV. 9.36

(-)1.5913%

STA. 13+75.00
ELEV. 5.14

GRADE DATA
-L- (SR 1170)

DENOTES GEO-TECH BORE HOLE LOCATIONS.

DENOTES TYPE III GUARDRAIL CONNECTION REQ'D. SEE "GUARDRAIL ANCHORAGE FOR VERTICAL CONCRETE BARRIER RAIL" SHEET.

NOTE: GUARDRAIL LENGTHS AS SHOWN INCLUDE ANCHOR UNITS.

U.O.N. - UNLESS OTHERWISE NOTED

FOR PAVEMENT LAYOUT SEE "ROADWAY DETAILS" SHEET.

RIP RAP CLASS II (2'-0" THICK)

END BENT No. 1	90 TONS
END BENT No. 2	105 TONS
TOTAL	195 TONS

FILTER FABRIC FOR DRAINAGE

END BENT No. 1	100 SQ. YARDS
END BENT No. 2	120 SQ. YARDS
TOTAL	220 SQ. YARDS

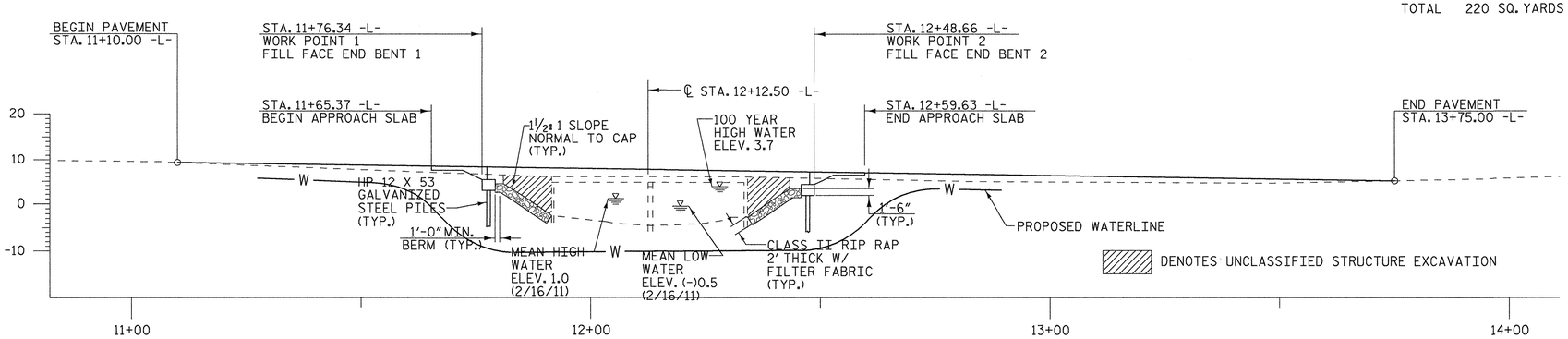

PROFILE ALONG ℄ SURVEY
SCALE : 1" = 15'

DRAWN BY : _____ DATE : _____
CHECKED BY : _____ DATE : _____

ROADSIDE ENVIRONMENTAL UNIT
DEPARTMENT OF TRANSPORTATION
DIVISION OF HIGHWAYS
RALEIGH, N.C.

2012 STANDARD SPECIFICATIONS

NOTES: ANY DEVIATION FROM OPTIONS GIVEN WILL REQUIRE PRIOR APPROVAL BY ENGINEER.

ADDITIONAL EROSION CONTROL DEVICES MAY NEED TO BE INSTALLED AS DIRECTED BY THE ENGINEER.

THESE EROSION AND SEDIMENT CONTROL PLANS COMPLY WITH THE REGULATIONS SET FORTH BY THE NCG-010000 GENERAL CONSTRUCTION PERMIT EFFECTIVE AUGUST 3, 2011 ISSUED BY THE NORTH CAROLINA DEPARTMENT OF ENVIRONMENT AND NATURAL RESOURCES DIVISION OF WATER QUALITY.

Std. #	Description	Symbol
1605.01	Temporary Silt Fence	
1606.01	Special Sediment Control Fence	
1622.01	Temporary Berms and Slope Drains	
	Wattle / Coir Fiber Wattle	EW / CFW

2012 STANDARD DRAWINGS

1604.01	Railroad Erosion Control Detail	1632.01	Rock Inlet Sediment Trap Type A
1605.01	Temporary Silt Fence	1632.02	Rock Inlet Sediment Trap Type B
1606.01	Special Sediment Control Fence	1632.03	Rock Inlet Sediment Trap Type C
1607.01	Gravel Construction Entrance	1633.01	Temporary Rock Silt Check Type A
1622.01	Temporary Berms and Slope Drains	1633.02	Temporary Rock Silt Check Type B
1630.01	Riser Basin	1634.01	Temporary Rock Sediment Dam Type A
1630.02	Silt Basin Type B	1634.02	Temporary Rock Sediment Dam Type B
1630.03	Temporary Silt Ditch	1635.01	Rock Pipe Inlet Sediment Trap Type A
1630.04	Stilling Basin	1635.02	Rock Pipe Inlet Sediment Trap Type B
1630.05	Temporary Diversion	1640.01	Coir Fiber Baffle
1630.06	Special Stilling Basin	1645.01	Temporary Stream Crossing
1631.01	Matting Installation		

Matthew Harvey
LEVEL IIIA NAME

412
LEVEL IIIA CERTIFICATION NO.

PLANS PREPARED BY:

MULKEY
ENGINEERS & CONSULTANTS
PO Box 33127
RALEIGH, N.C. 27636
(919) 851-1912
(919) 851-1918 (FAX)
WWW.MULKEYINC.COM

PROJECT NO. B-4464

CHOWAN COUNTY

STATION: 12+12.50 -L-

REPLACES BRIDGE NO. 35

STATE OF NORTH CAROLINA
DEPARTMENT OF TRANSPORTATION
RALEIGH

BRIDGE ON SR 1170 OVER UNNAMED TRIBUTARY TO EDENTON BAY BETWEEN SR 1169 & SR 1159

24'-10" CLEAR ROADWAY - 75° SKEW

REVISIONS						SHEET NO.
NO.	BY:	DATE:	NO.	BY:	DATE:	EC-1
1			3			TOTAL SHEETS
2			4			25

3/22/2012 9:43:51 AM R:\Hydraulics\Erosion Control\B-4464_hyd_EC_pan.dgn

PROJECT REFERENCE NO.	SHEET NO.	TOTAL SHEETS
B-4464	EC-2	25
ROADWAY DESIGN ENGINEER	HYDRAULICS ENGINEER	

DIVISION OF HIGHWAYS
STATE OF NORTH CAROLINA

SOIL STABILIZATION TIMEFRAMES

SITE DESCRIPTION	STABILIZATION TIME	TIMEFRAME EXCEPTIONS
PERIMETER DIKES, SWALES, DITCHES AND SLOPES	7 DAYS	NONE
HIGH QUALITY WATER (HQW) ZONES	7 DAYS	NONE
SLOPES STEEPER THAN 3:1	7 DAYS	IF SLOPES ARE 10' OR LESS IN LENGTH AND ARE NOT STEEPER THAN 2:1, 14 DAYS ARE ALLOWED.
SLOPES 3:1 OR FLATTER	14 DAYS	7 DAYS FOR SLOPES GREATER THAN 50' IN LENGTH.
ALL OTHER AREAS WITH SLOPES FLATTER THAN 4:1	14 DAYS	NONE, EXCEPT FOR PERIMETERS AND HQW ZONES.

PROJECT REFERENCE NO.	SHEET NO.	TOTAL SHEETS
B-4464	EC-3	25
ROADWAY DESIGN ENGINEER	HYDRAULICS ENGINEER	

WATTLE DETAIL

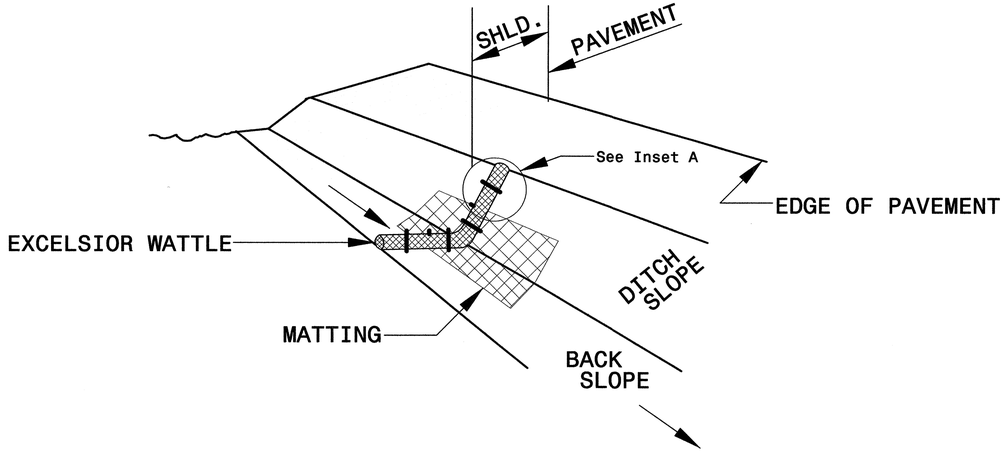

ISOMETRIC VIEW

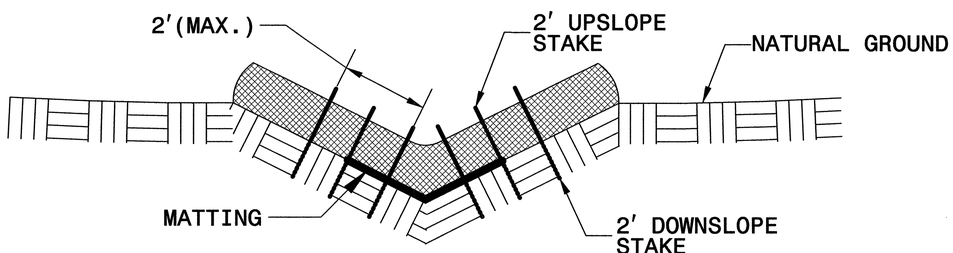

CROSS SECTION VEE DITCH

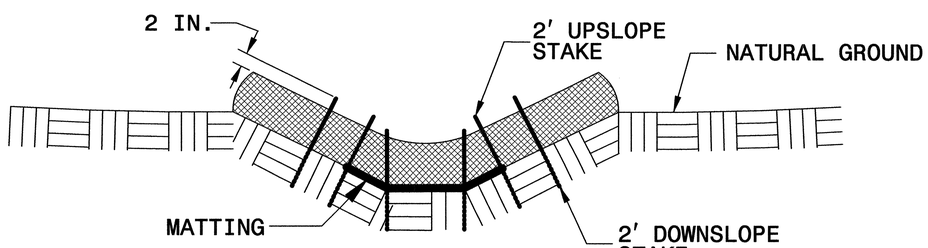

CROSS SECTION TRAPEZOIDAL DITCH

NOTES:

USE MINIMUM 12 IN. DIAMETER EXCELSIOR WATTLE.

USE 2 FT. WOODEN STAKES WITH A 2 IN. BY 2 IN. NOMINAL CROSS SECTION.

ONLY INSTALL WATTLE(S) TO A HEIGHT IN DITCH SO FLOW WILL NOT WASH AROUND WATTLE AND SCOUR DITCH SLOPES AND AS DIRECTED.

INSTALL A MINIMUM OF 2 UPSLOPE STAKES AND 4 DOWNSLOPE STAKES AT AN ANGLE TO WEDGE WATTLE TO BOTTOM OF DITCH.

PROVIDE STAPLES MADE OF 0.125 IN. DIAMETER STEEL WIRE FORMED INTO A U SHAPE NOT LESS THAN 12" IN LENGTH.

INSTALL STAPLES APPROXIMATELY EVERY 1 LINEAR FOOT ON BOTH SIDES OF WATTLE AND AT EACH END TO SECURE IT TO THE SOIL.

INSTALL MATTING IN ACCORDANCE WITH SECTION 1631 OF THE STANDARD SPECIFICATIONS.

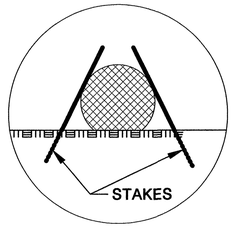

INSET A

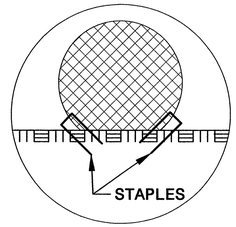

INSET B

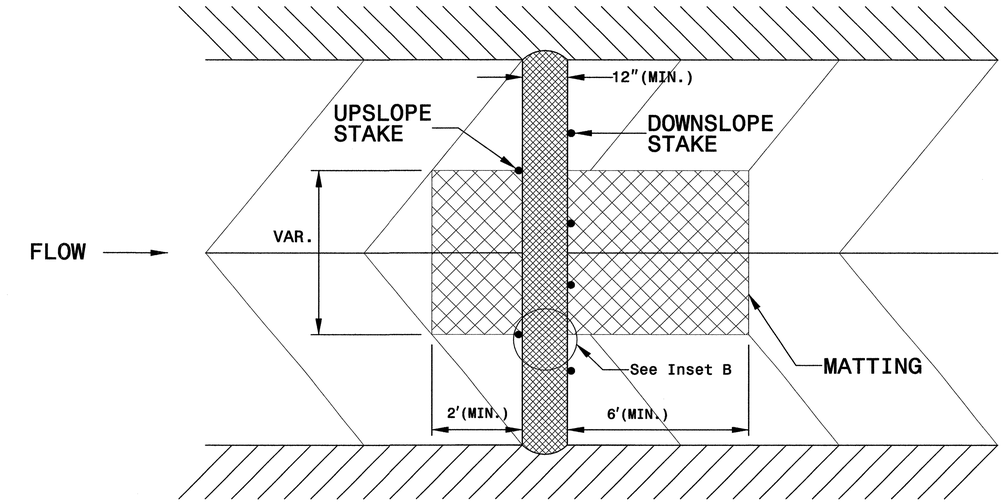

TOP VIEW

SILT FENCE WATTLE BREAK DETAIL

PROJECT REFERENCE NO.	SHEET NO.	TOTAL SHEETS
B-4464	EC-4	25
ROADWAY DESIGN ENGINEER	HYDRAULICS ENGINEER	

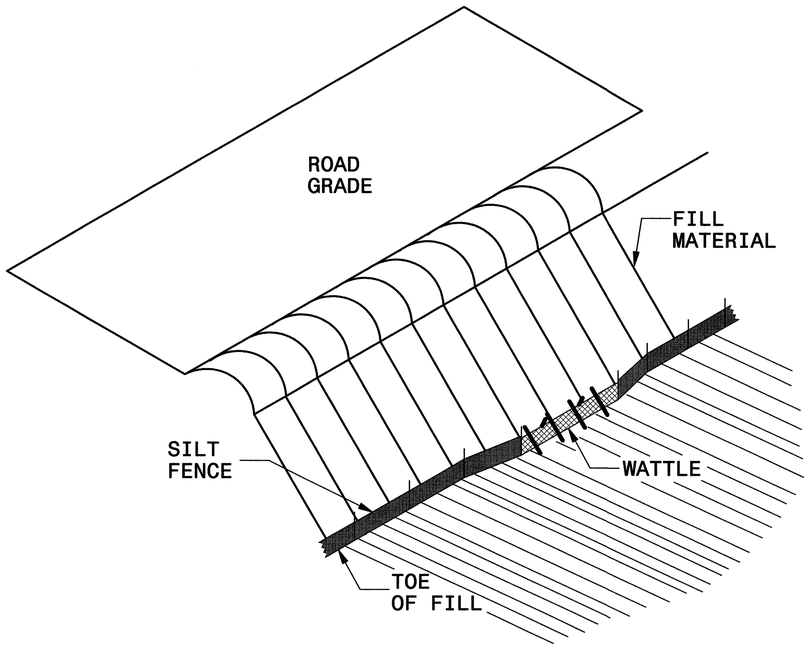

ISOMETRIC VIEW

NOTES:

USE MINIMUM 12 IN. DIAMETER EXCELSIOR WATTLE AND LENGTH OF 10 FT.

EXCAVATE A 1 TO 2 INCH TRENCH FOR WATTLE TO BE PLACED.

DO NOT PLACE WATTLE ON TOE OF SLOPE.

USE 2 FT. WOODEN STAKES WITH A 2 IN. BY 2 IN. NOMINAL CROSS SECTION.

INSTALL A MINIMUM OF 2 UPSLOPE STAKES AND 4 DOWNSLOPE STAKES AT AN ANGLE TO WEDGE WATTLE TO GROUND.

PROVIDE STAPLES MADE OF 0.125 IN. DIAMETER STEEL WIRE FORMED INTO A U SHAPE NOT LESS THAN 12″ IN LENGTH.

INSTALL STAPLES APPROXIMATELY EVERY 1 LINEAR FOOT ON BOTH SIDES OF WATTLE AND AT EACH END TO SECURE IT TO THE SOIL.

WATTLE INSTALLATION CAN BE ON OUTSIDE OF THE SILT FENCE AS DIRECTED.

INSTALL TEMPORARY SILT FENCE IN ACCORDANCE WITH SECTION 1605 OF THE STANDARD SPECIFICATIONS.

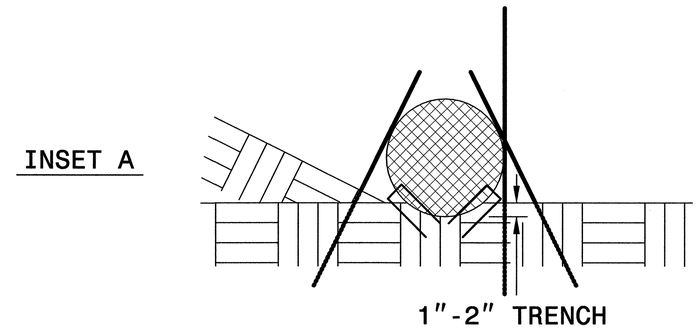

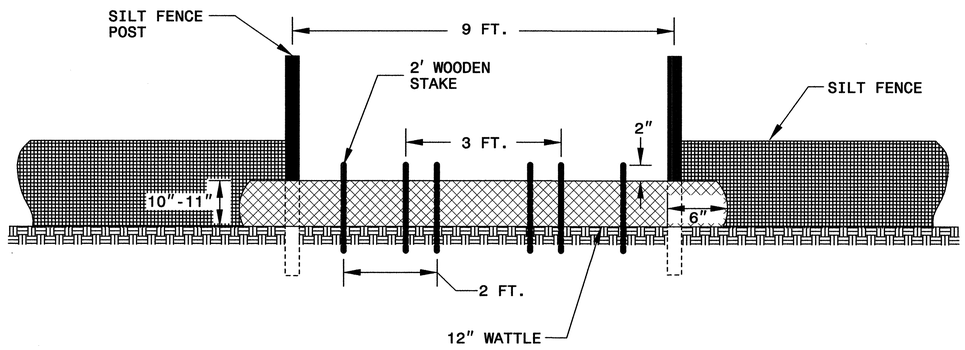

VIEW FROM SLOPE

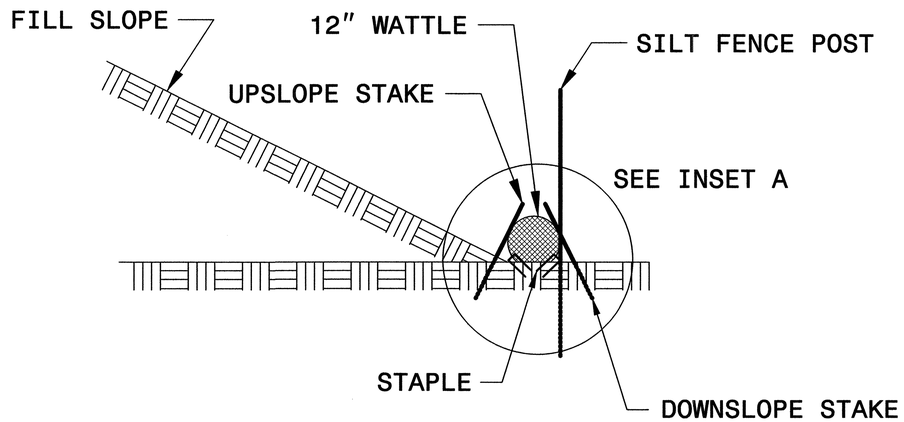

SIDE VIEW

PROJECT REFERENCE NO.	SHEET NO.	TOTAL SHEETS
B-4464	EC-5	25
ROADWAY DESIGN ENGINEER	HYDRAULICS ENGINEER	

WATTLE BARRIER DETAIL

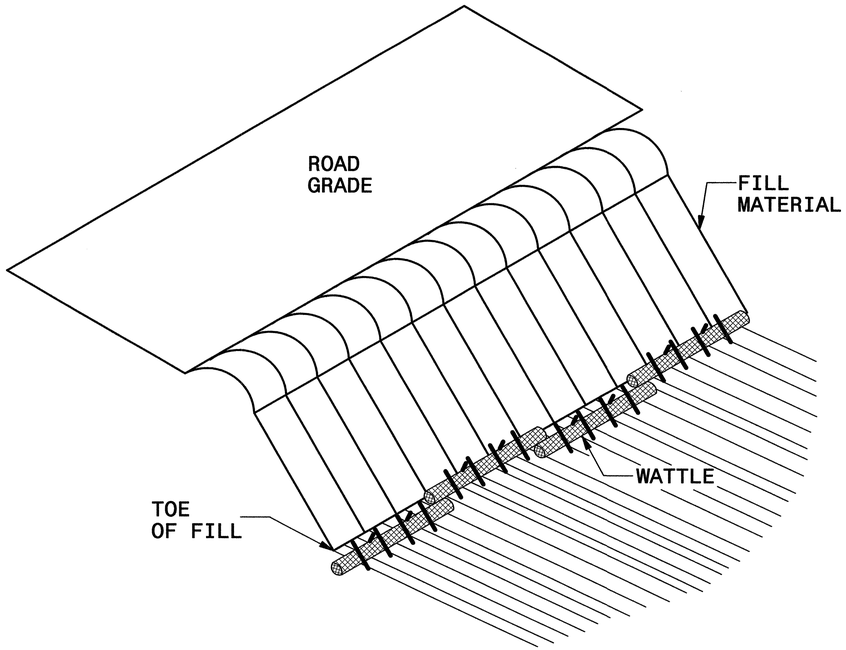

ISOMETRIC VIEW

NOTES:

USE MINIMUM 12 IN. DIAMETER EXCELSIOR WATTLE AND LENGTH OF 10 FT.

EXCAVATE A 1 TO 2 INCH TRENCH FOR WATTLE TO BE PLACED.

DO NOT PLACE WATTLES ON TOE OF SLOPE.

USE 2 FT. WOODEN STAKES WITH A 2 IN. BY 2 IN. NOMINAL CROSS SECTION.

INSTALL A MINIMUM OF 2 UPSLOPE STAKES AND 4 DOWNSLOPE STAKES AT AN ANGLE TO WEDGE WATTLE TO GROUND.

PROVIDE STAPLES MADE OF 0.125 IN. DIAMETER STEEL WIRE FORMED INTO A U SHAPE NOT LESS THAN 12″ IN LENGTH.

INSTALL STAPLES APPROXIMATELY EVERY 1 LINEAR FOOT ON BOTH SIDES OF WATTLE AND AT EACH END TO SECURE IT TO THE SOIL.

FOR BREAKS ALONG LARGE SLOPES, USE MAXIMUM SPACING OF 20 FT.

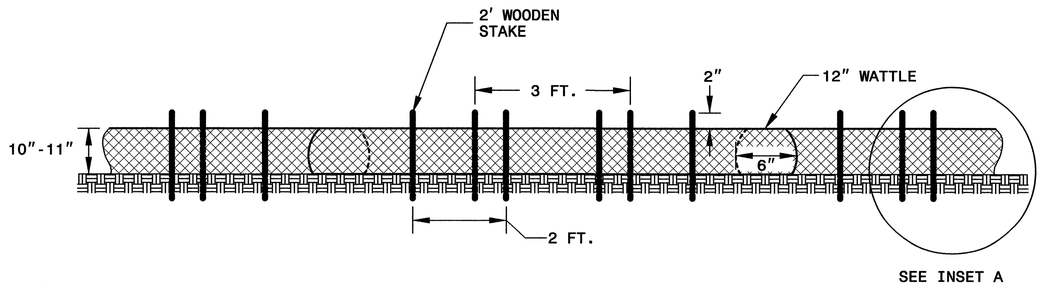

FRONT VIEW

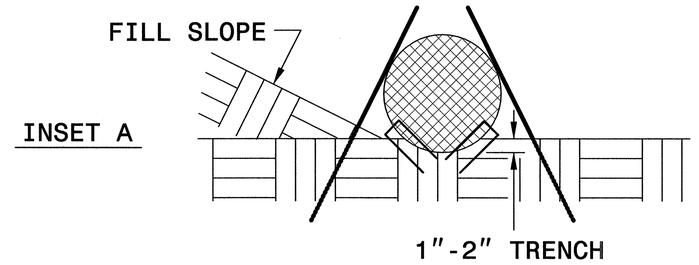

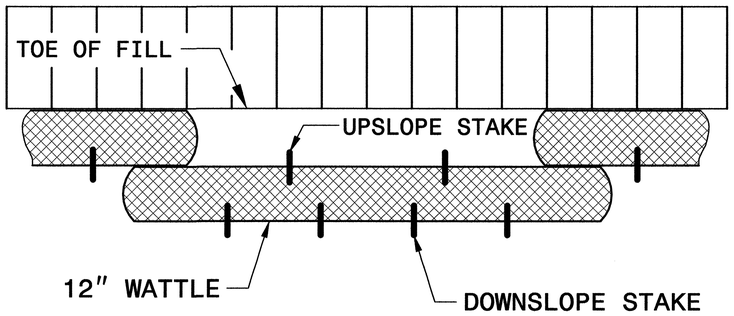

TOP VIEW