DocuSign Envelope ID: AD49546D-5BFE-4687-A3DE-BCD05980B178

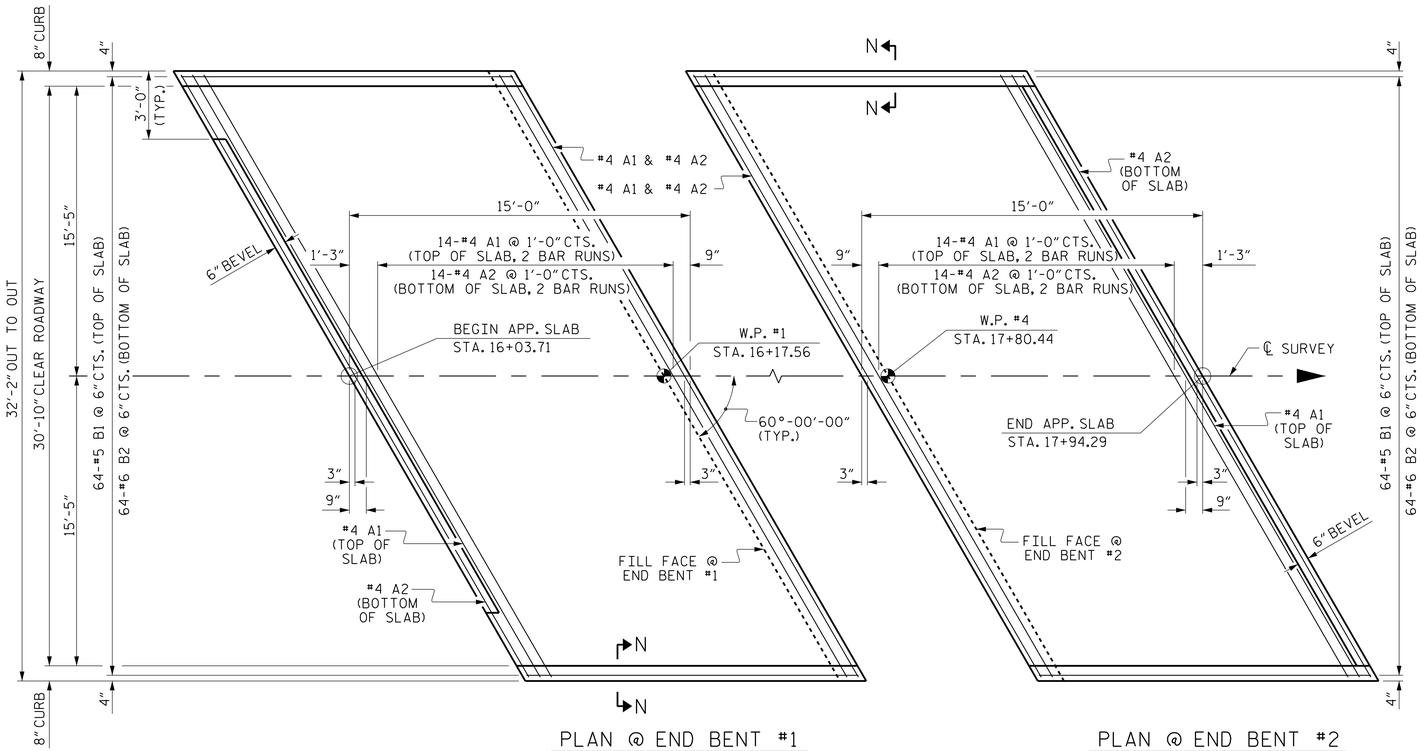

DIMENSIONS SHOWN ARE TYPICAL FOR BOTH APPROACH SLABS

NOTES

FOR BRIDGE APPROACH FILL INCLUDING GEOTEXTILE, 4" Ø DRAINAGE PIPE, AND SELECT MATERIAL BACKFILL, SEE ROADWAY PLANS.

GEOTEXTILE SHALL BE TYPE 1 IN ACCORDANCE WITH THE STANDARD SPECIFICATIONS SECTION 1056.

SELECT MATERIAL BACKFILL (CLASS V OR CLASS VI) SHALL BE IN ACCORDANCE WITH STANDARD SPECIFICATIONS SECTION 1016.

SELECT MATERIAL BACKFILL IS TO BE CONTINUOUS ALONG FILL FACE OF BACKWALL FROM OUTSIDE EDGE TO OUTSIDE EDGE OF APPROACH SLAB.

FOR THE 4" Ø DRAINAGE PIPE OUTLET(S), SEE ROADWAY STANDARD DRAWINGS.

AREA BETWEEN THE WINGWALL AND APPROACH SLAB SHALL BE GRADED TO DRAIN THE WATER AWAY FROM THE FILL FACE OF THE BRIDGE AND SHALL BE PAVED. SEE ROADWAY PLANS.

THE JOINT SHALL BE SAWED PRIOR TO THE CASTING OF THE BARRIER RAIL.

WITH FOAM JOINT SEAL

FOR FOAM JOINT SEALS, SEE SPECIAL PROVISIONS.

THE NOMINAL UNCOMPRESSED SEAL WIDTH OF THE FOAM JOINT SEAL SHALL BE 1".

FOR ELASTOMERIC CONCRETE, SEE SPECIAL PROVISIONS.

BILL OF MATERIAL

APPROACH SLAB AT EB #1

BAR	NO.	SIZE	TYPE	LENGTH	WEIGHT
* A1	32	#4	STR	19'-5"	415
A2	32	#4	STR	19'-4"	413
* B1	64	#5	STR	13'-9"	918
B2	64	#6	STR	14'-8"	1410
REINFORCING STEEL				LBS.	1823
* EPOXY COATED REINFORCING STEEL				LBS.	1333
CLASS AA CONCRETE				C. Y.	23.5

APPROACH SLAB AT EB #2

BAR	NO.	SIZE	TYPE	LENGTH	WEIGHT
* A1	32	#4	STR	19'-5"	415
A2	32	#4	STR	19'-4"	413
* B1	64	#5	STR	13'-9"	918
B2	64	#6	STR	14'-8"	1410
REINFORCING STEEL				LBS.	1823
* EPOXY COATED REINFORCING STEEL				LBS.	1333
CLASS AA CONCRETE				C. Y.	23.5

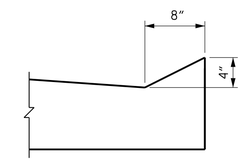

SECTION N-N

SPLICE LENGTHS		
BAR SIZE	EPOXY COATED	UNCOATED
#4	2'-0"	1'-9"
#5	2'-6"	2'-2"
#6	3'-10"	2'-7"

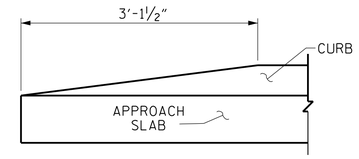

END OF CURB WITHOUT SHOULDER BERM GUTTER

CURB DETAILS

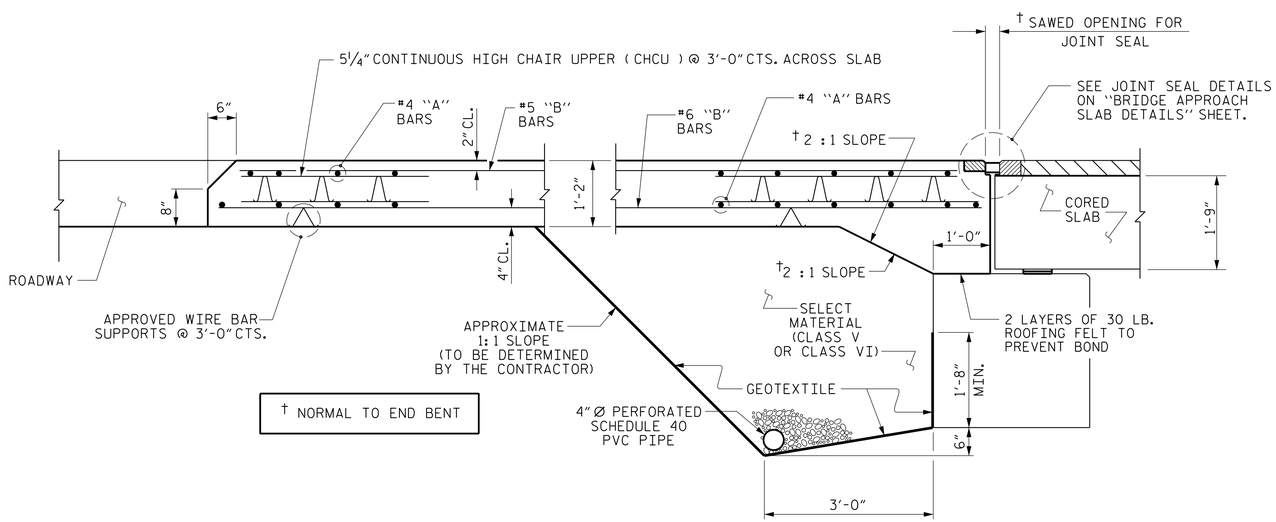

SECTION THRU SLAB

(TYPE II - MODIFIED APPROACH FILL)

PROJECT NO. B-5606

PERQUIMANS COUNTY

STATION: 16+99.00 -L-

SHEET 1 OF 2

STATE OF NORTH CAROLINA
DEPARTMENT OF TRANSPORTATION
RALEIGH

STANDARD

BRIDGE APPROACH SLAB FOR PRESTRESSED CONCRETE CORED SLAB

REVISIONS						SHEET NO.
NO.	BY:	DATE:	NO.	BY:	DATE:	S-22
1			3			TOTAL SHEETS
2			4			24

STD. NO. BAS3

PLANS PREPARED BY:
CALYX ENGINEERS + CONSULTANTS
6750 TRYON ROAD
CARY, NC 27518
phone: 919.851.1912
CALYXengineers.com
NC License # F-1333

DOCUMENT NOT CONSIDERED FINAL UNLESS ALL SIGNATURES COMPLETED

THIS STANDARD DRAWING REVIEWED & ADOPTED FOR USE AT THE REFERENCED LOCATION BY THE UNDERSIGNED:

NORTH CAROLINA PROFESSIONAL SEAL 036 ENGINEER L. KEVIN AUSTIN
DocuSigned by: L. Kevin Austin 7252B3720E0A4B9...
5/15/2018

ASSEMBLED BY :	W. B. ALLEN	DATE :	2/18
CHECKED BY :	Z. H. BROWN	DATE :	2/18
DRAWN BY : FCJ 6/87	REV. 12/21/11	MAA/GM	
CHECKED BY : EGA 6/87	REV. 6/13	MAA/GM	
	REV. 12/17	MAA/THC	

5/15/2018 3:02:41 PM R:\Structures\B5606_SMU_ASL_7001L.dgn