DocuSign Envelope ID: AD49546D-5BFE-4687-A3DE-BCD05980B178

NOTES

STIRRUPS IN CAP MAY BE SHIFTED AS NECESSARY TO CLEAR DOWELS.

★ INVERT ALTERNATE STIRRUPS.

GALVANIZE THE FULL LENGTH OF EACH INTERIOR BENT PILE IN ACCORDANCE WITH SECTION 1076 OF THE STANDARD SPECIFICATIONS.

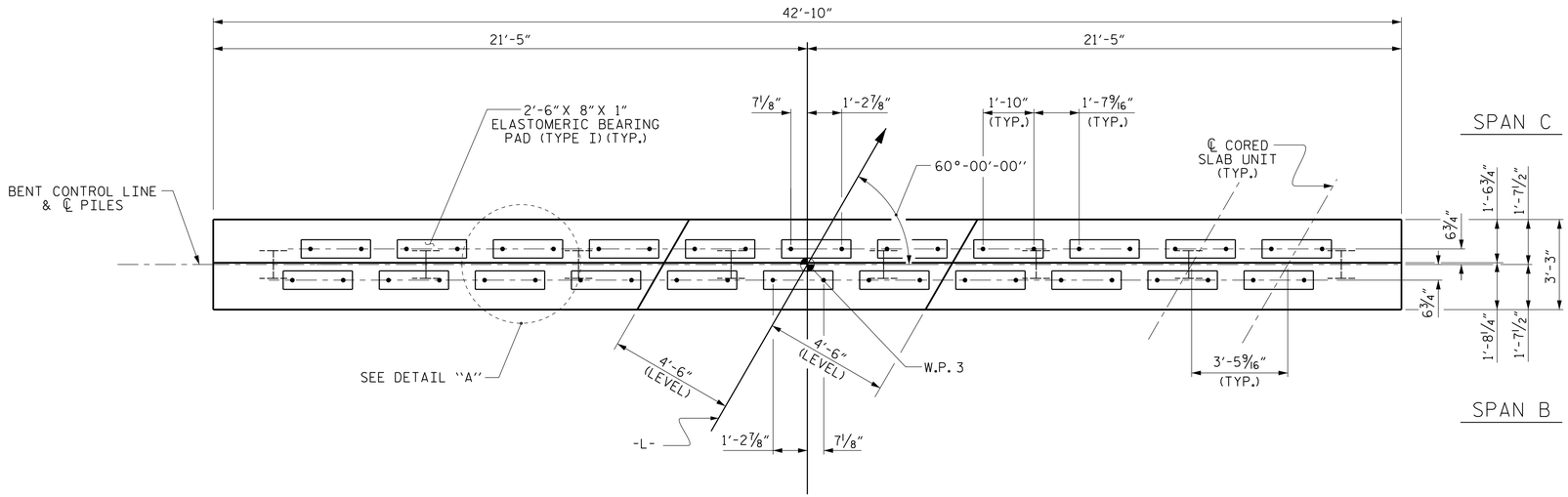

PLAN

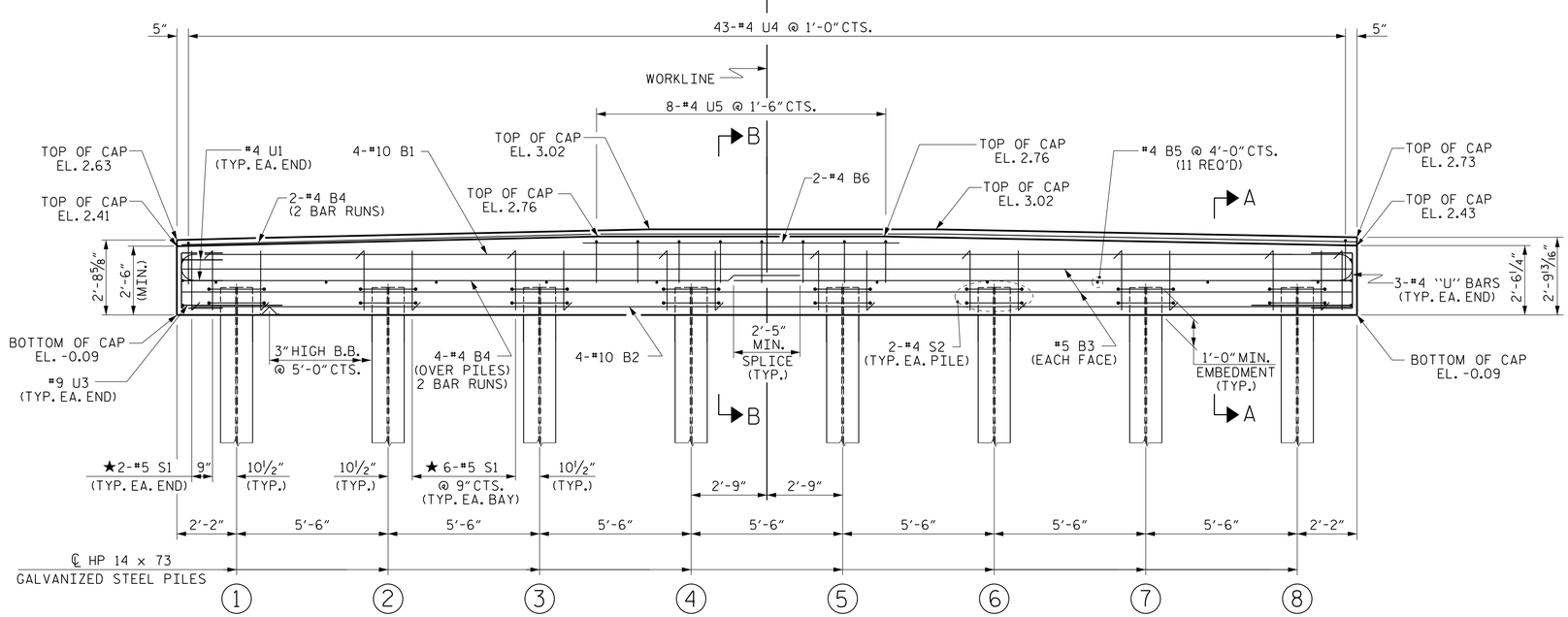

ELEVATION

FOR SECTION A-A & SECTION B-B, SEE SHEET 2 OF 2

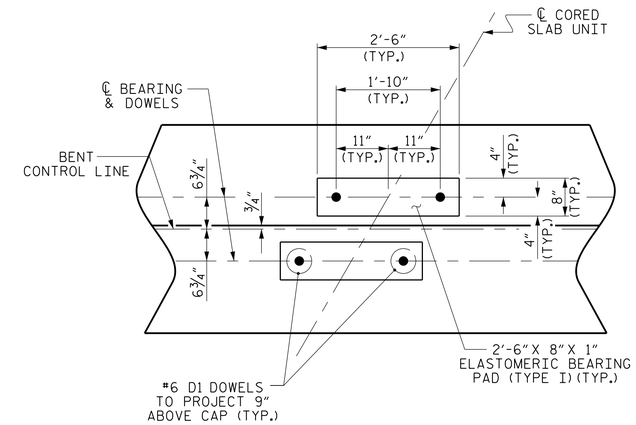

DETAIL "A"

(DIMENSIONS ARE TYPICAL EACH BEARING)

PROJECT NO. B-5606

PERQUIMANS COUNTY

STATION: 16+99.00 -L-

SHEET 1 OF 2

STATE OF NORTH CAROLINA
DEPARTMENT OF TRANSPORTATION
RALEIGH

SUBSTRUCTURE

BENT No. 2

ASSEMBLED BY : W. B. ALLEN	DATE : 8/17
CHECKED BY : Z. H. BROWN	DATE : 8/17
DRAWN BY : DGE 05/10	REV. 6/17 MAA/THC
CHECKED BY : MKT 05/10	

PLANS PREPARED BY:
CALYX ENGINEERS + CONSULTANTS
6750 TRYON ROAD
CARY, NC 27518
phone: 919.851.1912
CALYXengineers.com
NC License # F-1333

DOCUMENT NOT CONSIDERED FINAL UNLESS ALL SIGNATURES COMPLETED

THIS STANDARD DRAWING REVIEWED & ADOPTED FOR USE AT THE REFERENCED LOCATION BY THE UNDERSIGNED:

NORTH CAROLINA PROFESSIONAL SEAL 26611 ENGINEER L. KEVIN AUSTIN
DocuSigned by: L. Kevin Austin
5/15/2018

REVISIONS						
NO.	BY:	DATE:	NO.	BY:	DATE:	
1			3			
2			4			

SHEET NO. S-19
TOTAL SHEETS 24

STD. NO. 14" HP_BT_33_60S_<60'

5/15/2018 3:02:35 PM R:\Structures\B5606_SMU_B3_7100Ludgn