DocuSign Envelope ID: AD49546D-5BFE-4687-A3DE-BCD05980B178

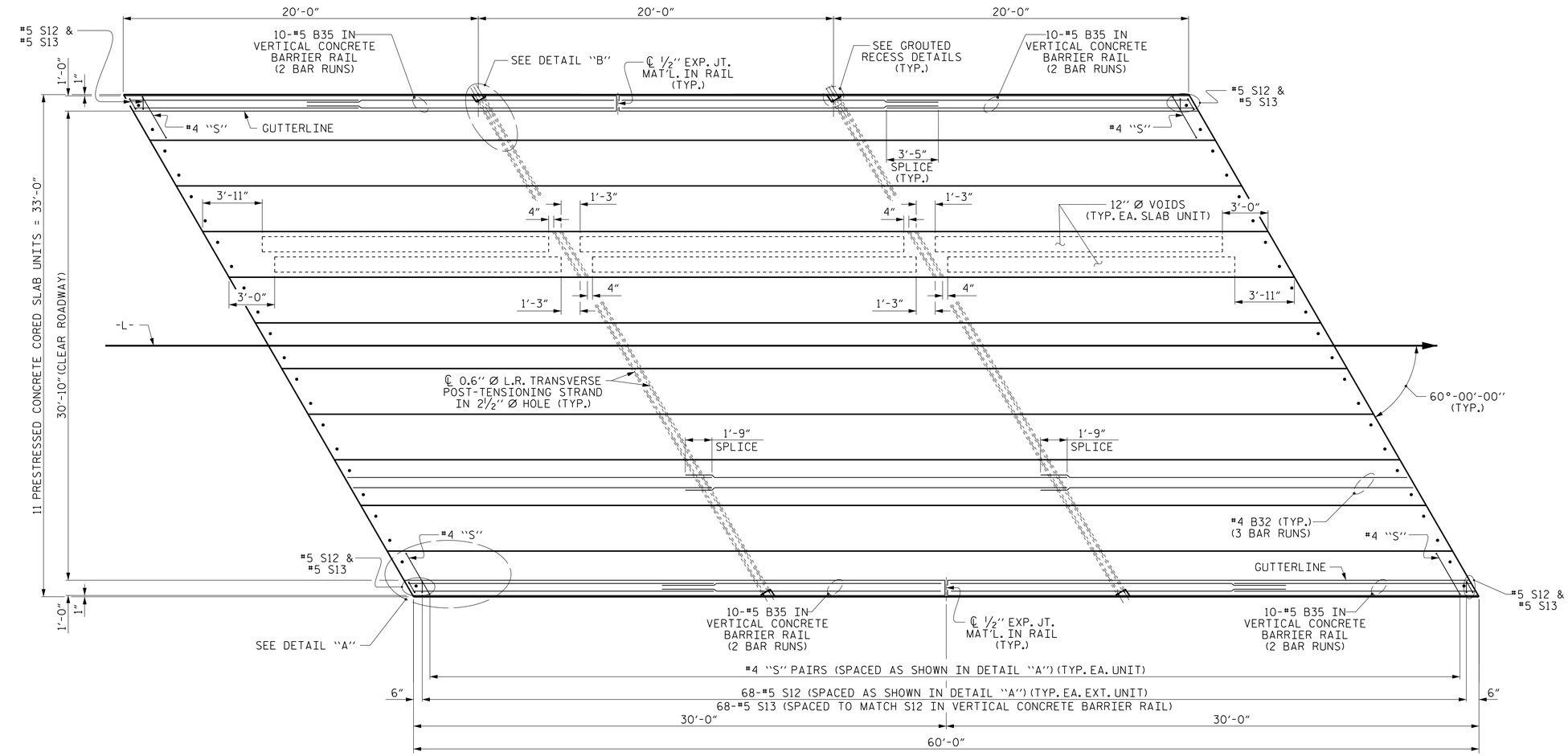

PLAN OF UNIT

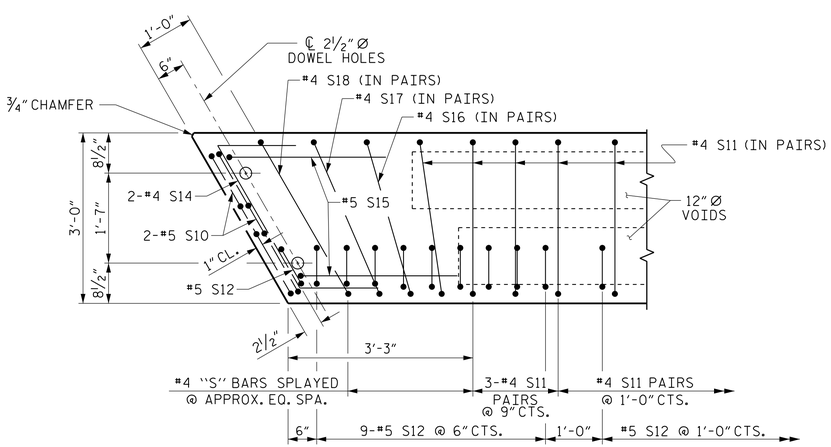

DETAIL "A"

(SIMILAR EACH END OF UNIT)
NOTE: EXTERIOR UNIT SHOWN - INTERIOR UNIT SIMILAR EXCEPT OMIT #5 S12 BARS.

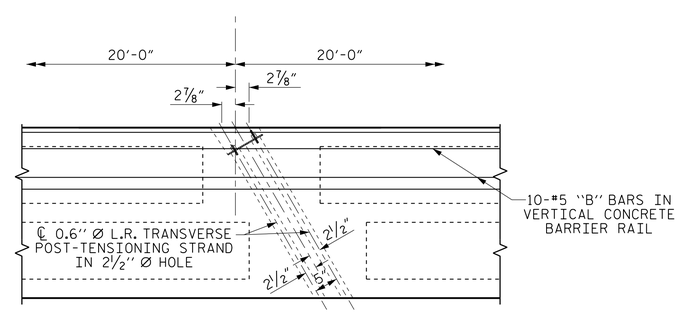

DETAIL "B"

#4 S11 BARS MAY BE SHIFTED AS NECESSARY TO MAINTAIN 1" CLEAR TO GROUTED RECESS AND 2½" Ø TRANSVERSE POST-TENSIONING STRAND HOLES

PROJECT NO. B-5606
PERQUIMANS COUNTY
STATION: 16+99.00 -L-

SHEET 4 OF 6

STATE OF NORTH CAROLINA
DEPARTMENT OF TRANSPORTATION
RALEIGH

PLAN OF 60' UNIT 30'-10" CLEAR ROADWAY 60° SKEW SPAN B

PLANS PREPARED BY:
CALYX ENGINEERS + CONSULTANTS
6750 TRYON ROAD
CARY, NC 27518
phone: 919.851.1912
CALYXengineers.com
NC License # F-1333

DOCUMENT NOT CONSIDERED FINAL UNLESS ALL SIGNATURES COMPLETED

THIS STANDARD DRAWING REVIEWED & ADOPTED FOR USE AT THE REFERENCED LOCATION BY THE UNDERSIGNED:

NORTH CAROLINA PROFESSIONAL ENGINEER L. KEVIN AUSTIN
Docu Signed by: L. Kevin Austin
5/15/2018

REVISIONS						
NO.	BY:	DATE:	NO.	BY:	DATE:	
1			3			
2			4			

SHEET NO. S-8
TOTAL SHEETS 24

ASSEMBLED BY :	W. B. ALLEN	DATE :	5/17
CHECKED BY :	Z. H. BROWN	DATE :	7/17
DRAWN BY : MAA	7/10	REV. 12/5/11	MAA/AAC
CHECKED BY : MKT	8/10	REV. 8/14	MAA/TMG

5/15/2018 3:22:21PM R:\Structures\B5606_SMU_CS4_7001L.dgn

STD. NO. 24PCS_33_60S_60L (TOP DOWN)