DocuSign Envelope ID: AD49546D-5BFE-4687-A3DE-BCD05980B178

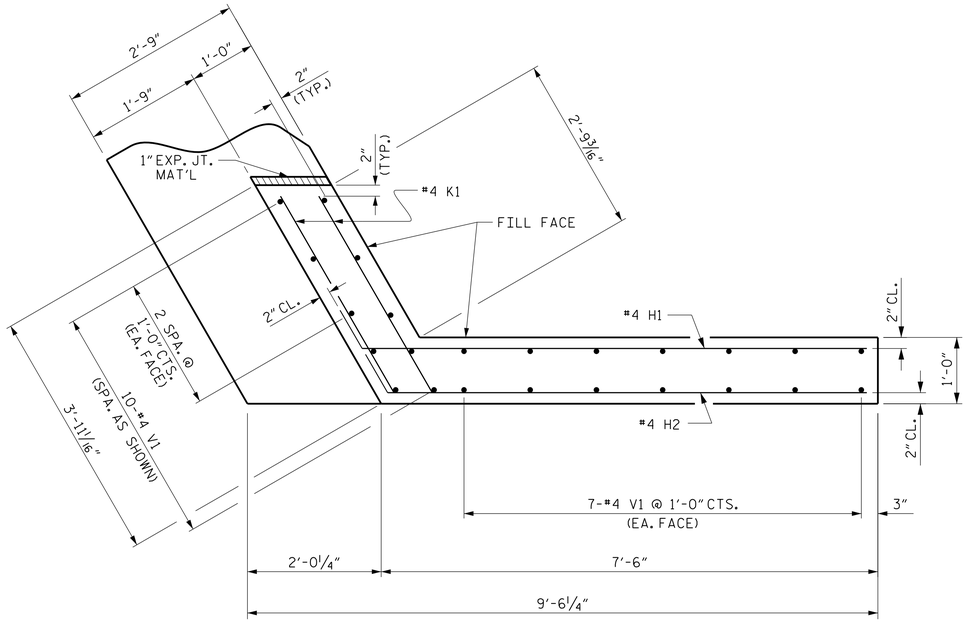

PLAN OF WING (W1)

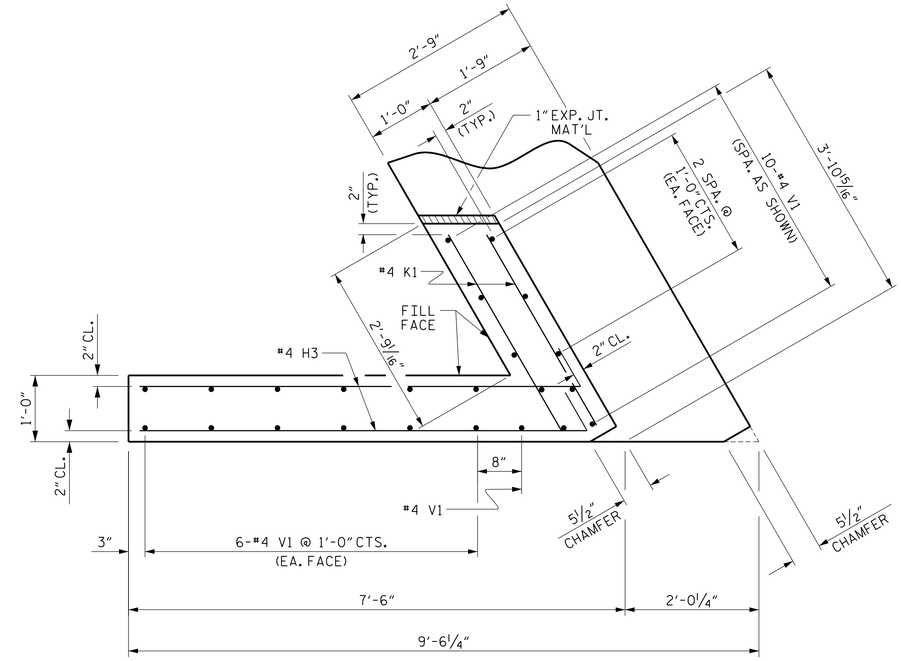

PLAN OF WING (W2)

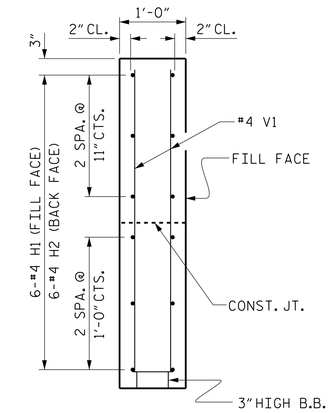

SECTION X-X

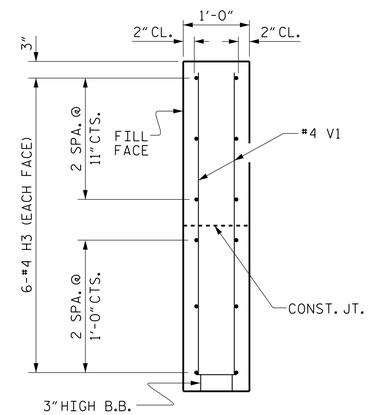

SECTION Y-Y

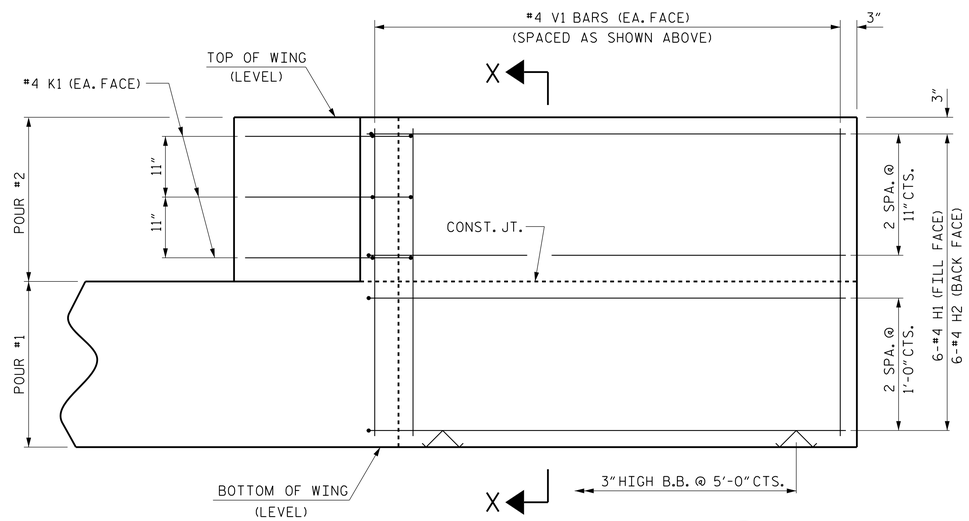

ELEVATION OF WING (W1)

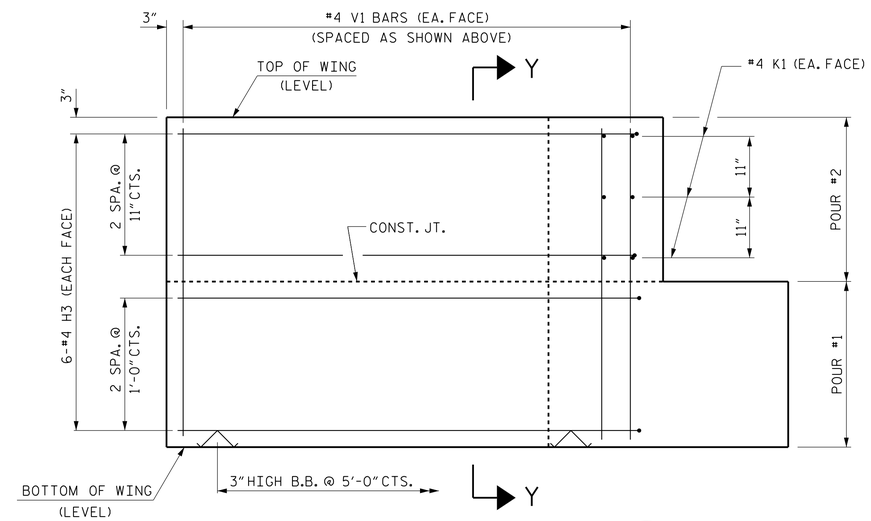

ELEVATION OF WING (W2)

WING DETAILS

PROJECT NO. B-5606

PERQUIMANS COUNTY

STATION: 16+99.00 -L-

SHEET 3 OF 4

DOCUMENT NOT CONSIDERED FINAL UNLESS ALL SIGNATURES COMPLETED

THIS STANDARD DRAWING REVIEWED & ADOPTED FOR USE AT THE REFERENCED LOCATION BY THE UNDERSIGNED:

NORTH CAROLINA PROFESSIONAL ENGINEER SEAL 026611 L. KEVIN AUSTIN

Docu Signed by: L. Kevin Austin 1-72F1B37206E4D8B...

5/15/2018

PLANS PREPARED BY:

CALYX ENGINEERS + CONSULTANTS

6750 TRYON ROAD
CARY, NC 27518
phone: 919.851.1912
CALYXengineers.com

NC License # F-1333

STATE OF NORTH CAROLINA
DEPARTMENT OF TRANSPORTATION
RALEIGH

SUBSTRUCTURE
END BENT
WING DETAILS

REVISIONS						SHEET NO.
NO.	BY:	DATE:	NO.	BY:	DATE:	S-15
1			3			TOTAL SHEETS
2			4			24

ASSEMBLED BY :	W. B. ALLEN	DATE :	5/17
CHECKED BY :	Z. H. BROWN	DATE :	7/17
DRAWN BY : DGE	12/09	REV. 4/15	MAA/TMG
CHECKED BY : MKT	01/10		

STD. NO. EB_33_60S

5/15/2018 3:02:31 PM R:\Structures\B5606_SMU_E3_7100ldgn