DocuSign Envelope ID: AD49546D-5BFE-4687-A3DE-BCD05980B178

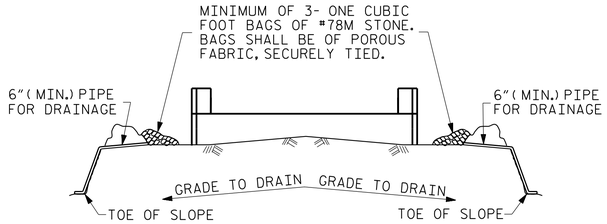

BAGGED STONE AND PIPE SHALL BE PLACED IMMEDIATELY AFTER COMPLETION OF END BENT EXCAVATION. PIPE MAY BE EITHER CONCRETE, CORRUGATED STEEL, CORRUGATED ALUMINUM ALLOY, OR CORRUGATED PLASTIC. PERFORATED PIPE WILL NOT BE ALLOWED.

BAGGED STONE SHALL REMAIN IN PLACE UNTIL THE ENGINEER DIRECTS THAT IT BE REMOVED. THE CONTRACTOR SHALL REMOVE AND DISPOSE OF SILT ACCUMULATIONS AT BAGGED STONE WHEN SO DIRECTED BY THE ENGINEER. BAGS SHALL BE REMOVED AND REPLACED WHENEVER THE ENGINEER DETERMINES THAT THEY HAVE DETERIORATED AND LOST THEIR EFFECTIVENESS.

NO SEPARATE PAYMENT WILL BE MADE FOR THIS WORK AND THE ENTIRE COST OF THIS WORK SHALL BE INCLUDED IN THE UNIT CONTRACT PRICE BID FOR THE SEVERAL PAY ITEMS.

TEMPORARY DRAINAGE AT END BENT

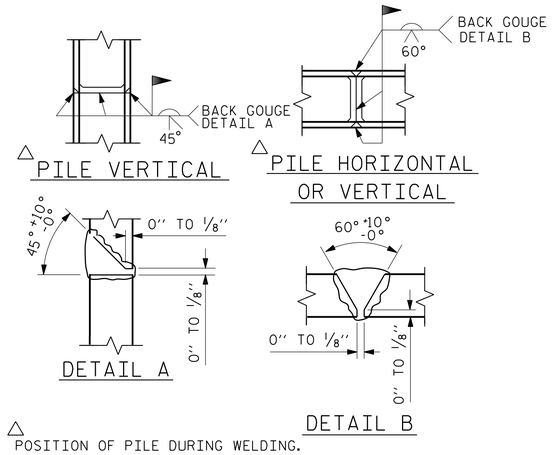

△ POSITION OF PILE DURING WELDING.

PILE SPLICE DETAILS

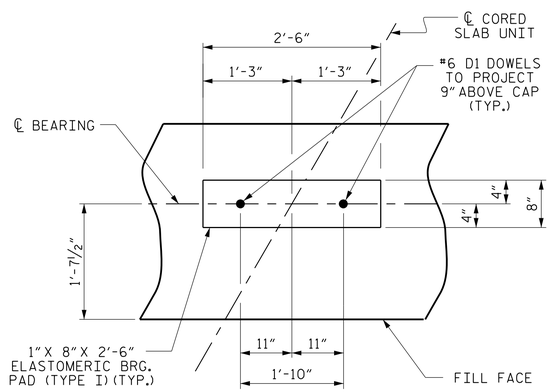

DETAIL "A"

(END BENT No. 1 SHOWN, END BENT No. 2 SIMILAR BY ROTATION)

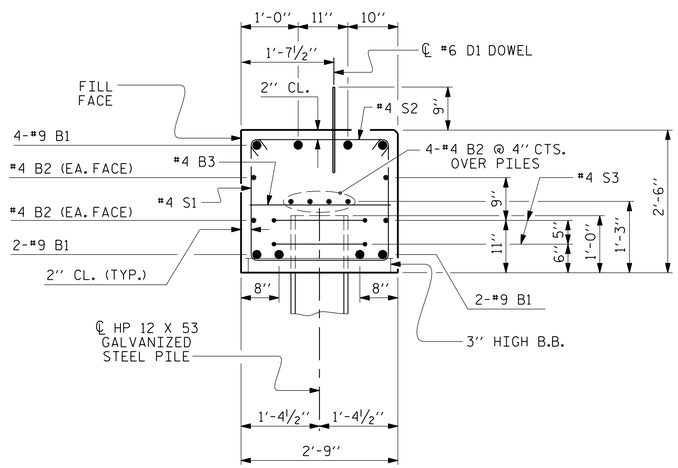

SECTION A-A

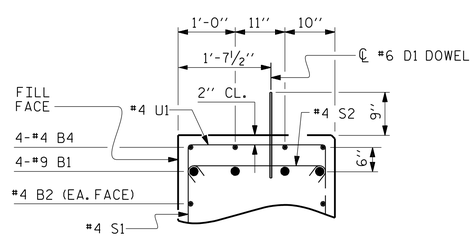

PARTIAL SECTION B-B

BAR TYPES

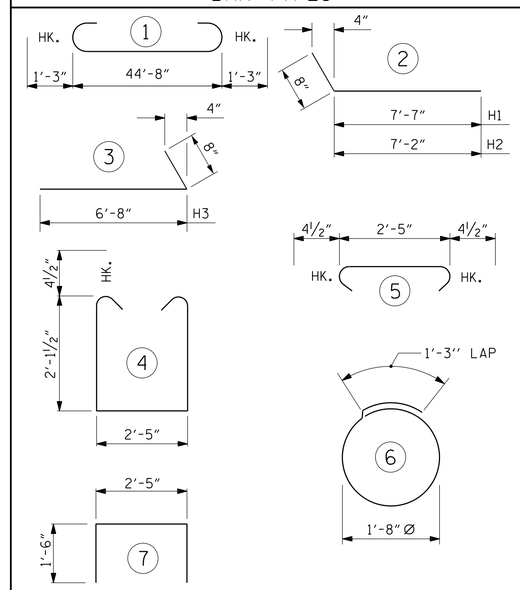

ALL BAR DIMENSIONS ARE OUT TO OUT.

END BENT No. 1	END BENT No. 2
HP 12 X 53 GALVANIZED STEEL PILES NO: 7 LIN. FT.= 560	HP 12 X 53 GALVANIZED STEEL PILES NO: 7 LIN. FT.= 560
PILE DRIVING EQUIPMENT SETUP FOR HP 12 X 53 GALVANIZED STEEL PILES NO: 7	PILE DRIVING EQUIPMENT SETUP FOR HP 12 X 53 GALVANIZED STEEL PILES NO: 7
PILE REDRIVES NO: 4	PILE REDRIVES NO: 4

BILL OF MATERIAL
FOR ONE END BENT

BAR	NO.	SIZE	TYPE	LENGTH	WEIGHT
B1	8	#9	1	47'-2"	1283
B2	16	#4	STR	23'-8"	253
B3	12	#4	STR	2'-5"	19
B4	4	#4	STR	14'-0"	37
D1	22	#6	STR	1'-6"	50
H1	6	#4	2	8'-3"	33
H2	6	#4	2	7'-10"	31
H3	12	#4	3	7'-4"	59
K1	12	#4	STR	3'-3"	26
S1	56	#4	4	7'-5"	277
S2	56	#4	5	3'-2"	118
S3	14	#4	6	6'-6"	61
U1	9	#4	7	5'-5"	33
V1	47	#4	STR	4'-8"	147

REINFORCING STEEL (FOR ONE END BENT) 2427 LBS.

CLASS A CONCRETE BREAKDOWN (FOR ONE END BENT)

POUR #1 CAP & LOWER PART OF WINGS 13.9 C.Y.

POUR #2 UPPER PART OF WINGS 1.9 C.Y.

TOTAL CLASS A CONCRETE 15.8 C.Y.

PROJECT NO. B-5606

PERQUIMANS COUNTY

STATION: 16+99.00 -L-

SHEET 4 OF 4

STATE OF NORTH CAROLINA
DEPARTMENT OF TRANSPORTATION
RALEIGH

SUBSTRUCTURE

END BENT No. 1 & 2 DETAILS

DOCUMENT NOT CONSIDERED FINAL UNLESS ALL SIGNATURES COMPLETED

THIS STANDARD DRAWING REVIEWED & ADOPTED FOR USE AT THE REFERENCED LOCATION BY THE UNDERSIGNED:

NORTH CAROLINA PROFESSIONAL SEAL ENGINEER KEVIN AUSTIN
Docusigned by: K. Kevin Austin
5/15/2018

PLANS PREPARED BY:
CALYX ENGINEERS + CONSULTANTS
6750 TRYON ROAD
CARY, NC 27518
phone: 919.851.1912
CALYXengineers.com
NC License # F-1333

REVISIONS						SHEET NO.
NO.	BY:	DATE:	NO.	BY:	DATE:	S-16
1			3			TOTAL SHEETS
2			4			24

ASSEMBLED BY : W. B. ALLEN		DATE : 5/17	
CHECKED BY : Z. H. BROWN		DATE : 7/17	
DRAWN BY : DGE	12/09	REV. 4/17	MAA/THC
CHECKED BY : MKT	01/10		

5/5/2018 3:02:32 PM R:\Structures\B5606_SMU_E4_7100.dgn

STD. NO. EB_33_60S