DocuSign Envelope ID: AD49546D-5BFE-4687-A3DE-BCD05980B178

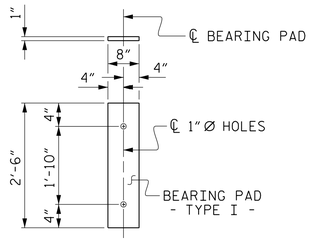

FIXED END
(TYPE I - 22 REQ'D)

ELASTOMERIC BEARING DETAILS

ELASTOMER IN ALL BEARINGS SHALL BE 60 DUROMETER HARDNESS.

DEAD LOAD DEFLECTION AND CAMBER	
	3'-0" x 2'-0"
60' CORED SLAB UNIT	0.6" Ø L.R. STRAND
CAMBER (SLAB ALONE IN PLACE)	2 3/16" ↑
DEFLECTION DUE TO SUPERIMPOSED DEAD LOAD**	7/16" ↓
FINAL CAMBER	1 3/4" ↑

** INCLUDES FUTURE WEARING SURFACE

GRADE 270 STRANDS	
	0.6" Ø L.R.
AREA (SQUARE INCHES)	0.217
ULTIMATE STRENGTH (LBS. PER STRAND)	58,600
APPLIED PRESTRESS (LBS. PER STRAND)	43,950

CONCRETE RELEASE STRENGTH	
UNIT	PSI
60' UNITS	7200

CORED SLABS REQUIRED			
	NUMBER	LENGTH	TOTAL LENGTH
60' UNIT			
EXTERIOR C.S.	2	60'-0"	120'-0"
INTERIOR C.S.	9	60'-0"	540'-0"
TOTAL	11		660'-0"

BAR TYPES

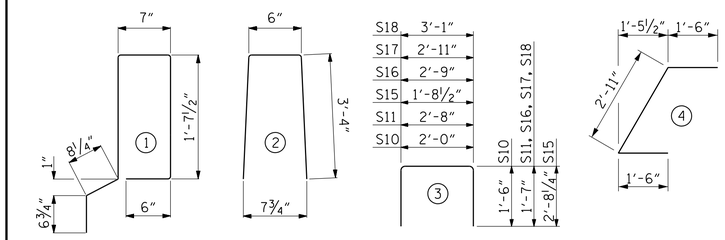

ALL BAR DIMENSIONS ARE OUT TO OUT

BILL OF MATERIAL FOR VERTICAL CONCRETE BARRIER RAIL

BAR	BARS PER PAIR OF EXTERIOR UNITS	TOTAL NO.	SIZE	TYPE	LENGTH	WEIGHT
	60' UNIT					
*B23	80	80	#5	STR	16'-11"	1412
*S13	140	140	#5	2	7'-2"	1046
*EPOXY COATED REINFORCING STEEL				LBS.		2458
CLASS AA CONCRETE				CU.YDS.		15.5
TOTAL VERTICAL CONCRETE BARRIER RAIL				LN. FT.		120.29

BILL OF MATERIAL FOR ONE 60' CORED SLAB UNIT

				EXTERIOR UNIT		INTERIOR UNIT	
BAR	NUMBER	SIZE	TYPE	LENGTH	WEIGHT	LENGTH	WEIGHT
B32	6	#4	STR	21'-2"	85	21'-2"	85
S10	8	#5	3	5'-0"	42	5'-0"	42
S11	112	#4	3	5'-10"	436	5'-10"	436
*S12	70	#5	1	5'-7"	408		
S14	4	#4	4	5'-11"	16	5'-11"	16
S15	4	#5	3	7'-1"	30	7'-1"	30
S16	4	#4	3	5'-11"	16	5'-11"	16
S17	4	#4	3	6'-1"	16	6'-1"	16
S18	4	#4	3	6'-3"	17	6'-3"	17
REINFORCING STEEL			LBS.		658		658
*EPOXY COATED REINFORCING STEEL			LBS.		408		
9500 P.S.I. CONCRETE			CU. YDS.		10.4		10.4
0.6" Ø L.R. STRANDS			No.		37		37

NOTES

ALL PRESTRESSING STRANDS SHALL BE 7-WIRE LOW RELAXATION GRADE 270 STRANDS AND SHALL CONFORM TO AASHTO M203 EXCEPT FOR SAMPLING REQUIREMENTS WHICH SHALL BE IN ACCORDANCE WITH THE STANDARD SPECIFICATIONS.

ALL REINFORCING STEEL CAST WITH THE CORED SLAB SECTIONS SHALL BE GRADE 60 AND SHALL BE INCLUDED IN THE UNIT PRICE BID FOR PRESTRESSED CONCRETE CORED SLABS.

RECESSES FOR TRANSVERSE STRANDS SHALL BE GROUTED AFTER THE TENSIONING OF THE STRANDS.

THE 2 1/2" Ø DOWEL HOLES AT FIXED ENDS OF SLAB SECTIONS SHALL BE FILLED WITH NON-SHRINK GROUT.

THE BACKER RODS SHALL CONFORM TO THE REQUIREMENTS OF TYPE M BOND BREAKER. SEE SECTION 1028 OF THE STANDARD SPECIFICATIONS.

WHEN CORED SLABS ARE CAST, AN INTERNAL HOLD-DOWN SYSTEM SHALL BE EMPLOYED TO PREVENT VOIDS FROM RISING OR MOVING SIDEWAYS. AT LEAST SIX WEEKS PRIOR TO CASTING CORED SLABS, THE CONTRACTOR SHALL SUBMIT TO THE ENGINEER FOR REVIEW AND COMMENT, DETAILED DRAWINGS OF THE PROPOSED HOLD-DOWN SYSTEM. IN ADDITION TO STRUCTURAL DETAILS, LOCATION AND SPACING OF THE HOLD-DOWNS SHALL BE INDICATED.

THE TRANSFER OF LOAD FROM THE ANCHORAGES TO THE CORED SLAB UNIT SHALL BE DONE WHEN THE CONCRETE HAS REACHED A COMPRESSIVE STRENGTH OF NOT LESS THAN THE REQUIRED STRENGTH SHOWN IN THE "CONCRETE RELEASE STRENGTH" TABLE.

ALL REINFORCING STEEL IN VERTICAL CONCRETE BARRIER RAILS SHALL BE EPOXY COATED.

PRESTRESSING STRANDS SHALL BE CUT FLUSH WITH THE CORED SLAB UNIT ENDS.

APPLY EPOXY PROTECTIVE COATING TO CORED SLAB UNIT ENDS.

GROOVED CONTRACTION JOINTS, 1/2" IN DEPTH, SHALL BE TOOLED IN ALL EXPOSED FACES OF THE BARRIER RAIL AND IN ACCORDANCE WITH ARTICLE 825-10(B) OF THE STANDARD SPECIFICATIONS. A CONTRACTION JOINT SHALL BE LOCATED AT EACH THIRD POINT BETWEEN BARRIER RAIL EXPANSION JOINTS. ONLY ONE CONTRACTION JOINT IS REQUIRED AT MIDPOINT OF BARRIER RAIL SEGMENTS LESS THAN 20 FEET IN LENGTH AND NO CONTRACTION JOINTS ARE REQUIRED FOR THOSE SEGMENTS LESS THAN 10 FEET IN LENGTH.

FLAME CUTTING OF THE TRANSVERSE POST-TENSIONING STRAND IS NOT ALLOWED.

MAINTAIN A SYMMETRIC TENSION FORCE BETWEEN EACH PAIR OF TRANSVERSE POST TENSIONING STRANDS IN THE DIAPHRAGM.

THE #4 S11 STIRRUPS MAY BE SHIFTED AS NECESSARY TO MAINTAIN 1" CLEAR TO THE GROUTED RECESS.

FOR GROUT FOR STRUCTURES, SEE SPECIAL PROVISIONS.

THE PERMITTED THREADED INSERTS ARE DETAILED AS AN OPTION FOR THE CONTRACTOR TO ATTACH FALSEWORK AND FORMWORK DURING CONSTRUCTION.

THE PERMITTED THREADED INSERTS IN THE EXTERIOR UNITS SHALL BE SIZED BY THE CONTRACTOR, SPACED AT 4'-0" CENTERS AND GALVANIZED IN ACCORDANCE WITH SECTION 1076 OF THE STANDARD SPECIFICATIONS. STAINLESS STEEL THREADED INSERTS MAY BE USED AS AN ALTERNATE.

THE PERMITTED THREADED INSERTS SHALL BE GROUTED BY THE CONTRACTOR IMMEDIATELY FOLLOWING REMOVAL OF THE FALSEWORK.

THE COST OF THE PERMITTED THREADED INSERTS SHALL BE INCLUDED IN THE PRICE BID FOR THE PRECAST UNITS.

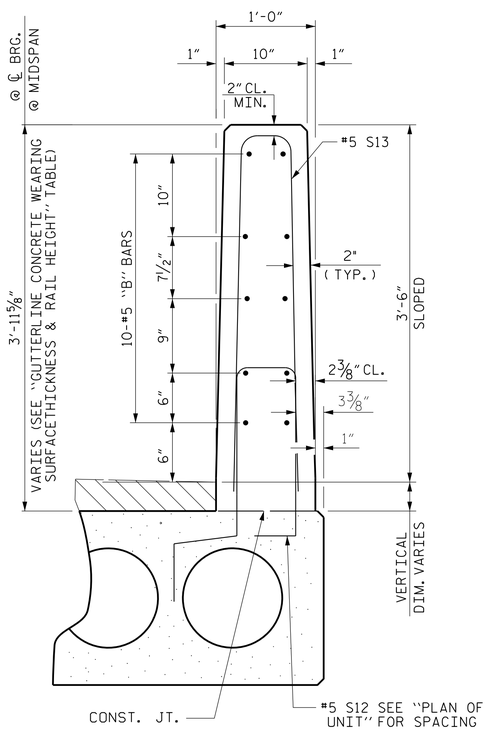

SECTION THRU RAIL

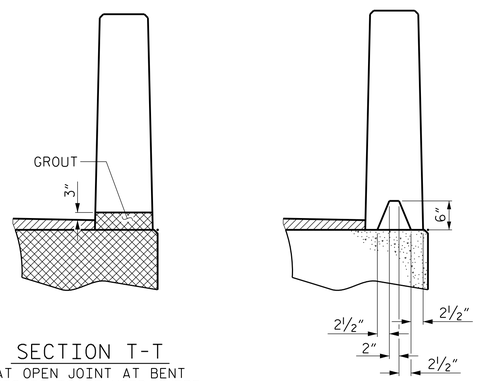

SECTION T-T
AT OPEN JOINT AT BENT
(THIS IS TO BE USED WHERE FOAM JOINT IS NOT USED)

SECTION S-S
AT DAM IN OPEN JOINT
(THIS IS TO BE USED ONLY WHEN SLIP FORM IS USED)

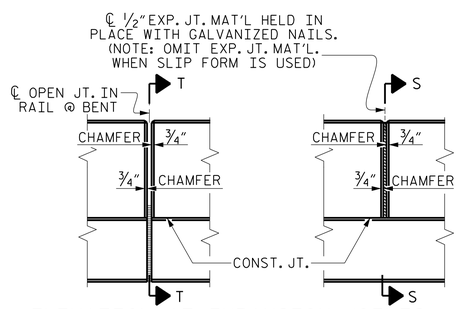

ELEVATION AT EXPANSION JOINTS

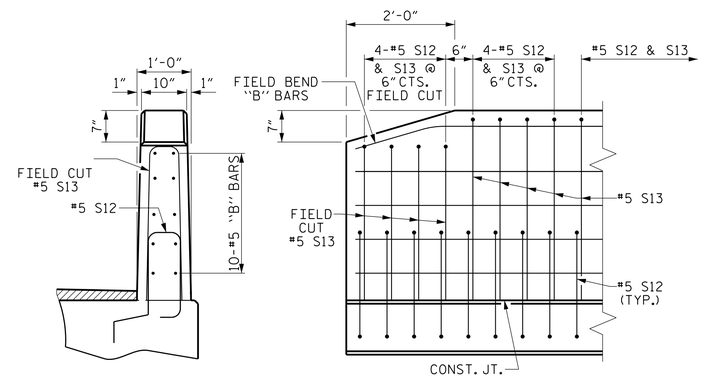

END VIEW

SIDE VIEW

END OF RAIL DETAILS

VERTICAL CONCRETE BARRIER RAIL DETAILS

GUTTERLINE CONCRETE WEARING SURFACE THICKNESS & RAIL HEIGHT		
	CONCRETE WEARING SURFACE THICKNESS	RAIL HEIGHT
	@ MID-SPAN	@ MID-SPAN
60' UNITS	3 7/8"	3'-9 7/8"

PROJECT NO. B-5606
PERQUIMANS COUNTY
STATION: 16+99.00 -L-

SHEET 6 OF 6

PLANS PREPARED BY:
CALYX
ENGINEERS + CONSULTANTS
6750 TRYON ROAD
CARY, NC 27518
phone: 919.851.1912
CALYXengineers.com
NC License # F-1333

DOCUMENT NOT CONSIDERED FINAL UNLESS ALL SIGNATURES COMPLETED

THIS STANDARD DRAWING REVIEWED & ADOPTED FOR USE AT THE REFERENCED LOCATION BY THE UNDERSIGNED:

NORTH CAROLINA PROFESSIONAL SEAL ENGINEER L. KEVIN AUSTIN 19661
Docu Signed by: L. Kevin Austin
5/15/2018

STATE OF NORTH CAROLINA
DEPARTMENT OF TRANSPORTATION
RALEIGH

STANDARD
3'-0" X 2'-0"
PRESTRESSED CONCRETE
CORED SLAB UNIT
SPAN B 60° SKEW

REVISIONS						SHEET NO.
NO.	BY:	DATE:	NO.	BY:	DATE:	S-10
1			3			TOTAL SHEETS
2			4			24

ASSEMBLED BY :	W. B. ALLEN	DATE :	7/17
CHECKED BY :	Z. H. BROWN	DATE :	7/17
DRAWN BY : MAA	6/10	REV. 11/14	MAA/TMG
CHECKED BY : MKT	8/10		

5/15/2018 3:02:23 PM R:\Structures\B5606_SMU_CS6_7000L.dgn

STD. NO. 24PCS3_33_60&120S (TOP DOWN)