DocuSign Envelope ID: AD49546D-5BFE-4687-A3DE-BCD05980B178

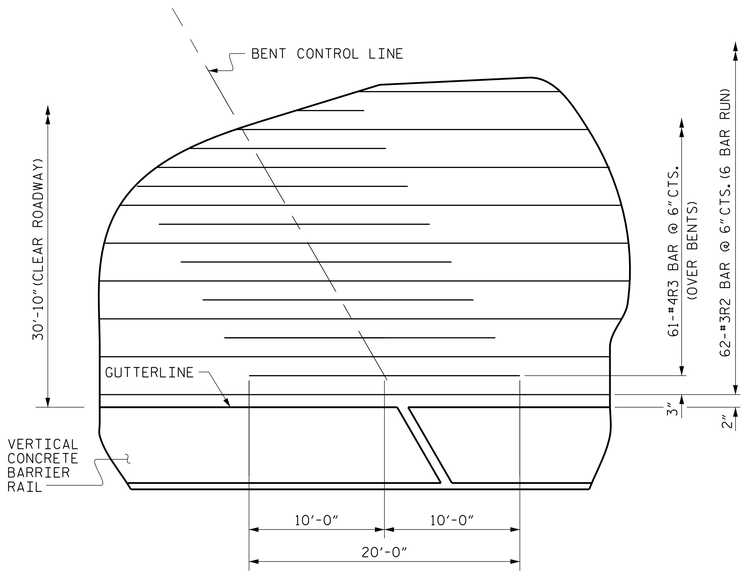

PLAN @ BENTS

R1 BARS NOT SHOWN FOR CLARITY.

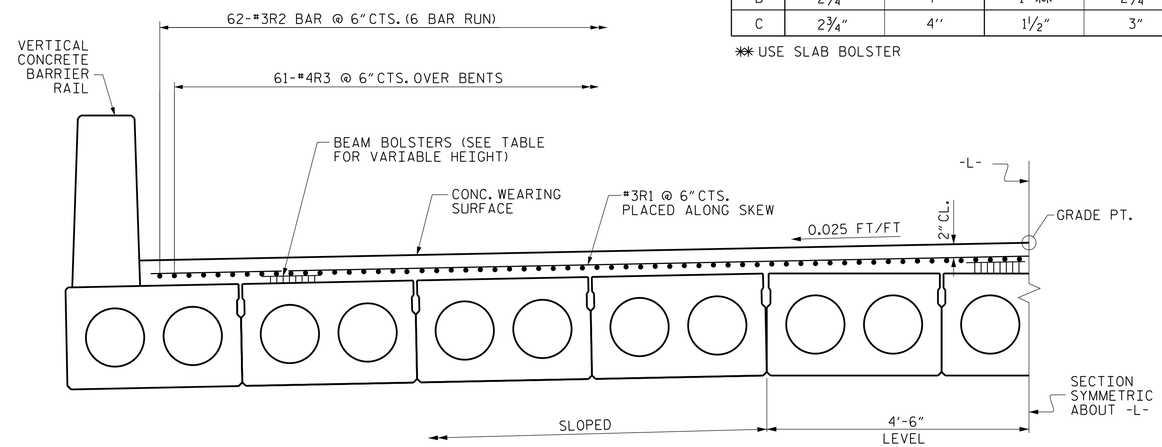

REINFORCING STEEL AND BEAM BOLSTER HEIGHTS

NOTE: BEAM AND SLAB BOLSTER HEIGHTS BASED ON PREDICTED FINAL CAMBER AND THEORETICAL GRADE LINE ELEVATION AND VARY BETWEEN ℄ BEARING AND MID-SPAN FOR ALL SPANS.

BEAM BOLSTER HEIGHT

SPAN	AT ℄ BEARINGS		AT MID-SPAN	
	GUTTERS	GRADE PT.	GUTTERS	GRADE PT.
A	2¾"	4"	1½"	3"
B	2¾"	4"	1" ✱✱	2¼"
C	2¾"	4"	1½"	3"

✱✱ USE SLAB BOLSTER

BILL OF MATERIAL

CONCRETE WEARING SURFACE

BAR	NO.	SIZE	TYPE	LENGTH	WEIGHT
✱ R1	636	#3	STR	18'-3"	4364
✱ R2	372	#3	STR	27'-7"	3858
✱ R3	122	#4	STR	20'-0"	1630

✱ EPOXY COATED REINF. STEEL = 9852 LBS

CONCRETE WEARING SURFACE = 4942 SQ. FT.

SPLICE LENGTH CHART

BAR SIZE	EPOXY COATED
#3	1'-3"

GROOVING BRIDGE FLOOR QUANTITY

	AREA (SQ. FT.)
BRIDGE DECK	4421
APPROACH SLABS	752
TOTAL	5173

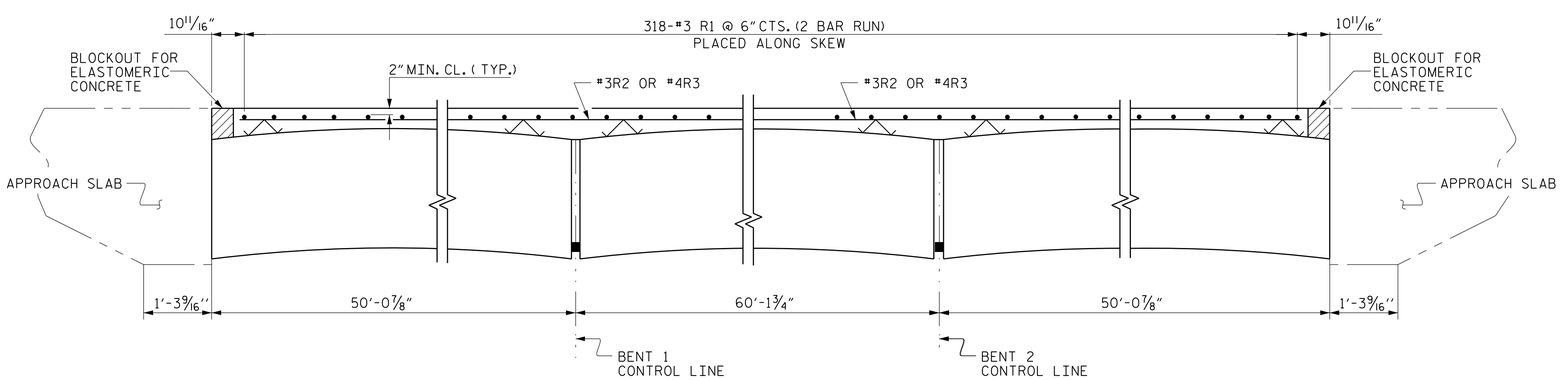

ELEVATION OF THE CONCRETE WEARING SURFACE

NOTES:

PLACEMENT OF THE CONCRETE WEARING SURFACE SHALL OCCUR AFTER CASTING THE VERTICAL CONCRETE BARRIER RAILS. THE COST OF THE REINFORCING STEEL CAST WITH THE CONCRETE WEARING SURFACE SHALL BE INCLUDED IN THE UNIT PRICE BID FOR CONCRETE WEARING SURFACE. FOR CONCRETE WEARING SURFACE, SEE SPECIAL PROVISIONS.

ALL REINFORCING FOR THE CONCRETE WEARING SURFACE SHALL BE EPOXY COATED.

PROJECT NO. B-5606

PERQUIMANS COUNTY

STATION: 16+99.00 -L-

NORTH CAROLINA PROFESSIONAL SEAL 19661 ENGINEER L. KEVIN AUSTIN

DocuSigned by: L. Kevin Austin 7229B3720EA4488... 5/15/2018

PLANS PREPARED BY:

CALYX ENGINEERS + CONSULTANTS
6750 TRYON ROAD
CARY, NC 27518
phone: 919.851.1912
CALYXengineers.com
NC License # F-1333

STATE OF NORTH CAROLINA
DEPARTMENT OF TRANSPORTATION
RALEIGH

SUPERSTRUCTURE

CONCRETE WEARING SURFACE DETAILS

30'-10" CLEAR ROADWAY - 60° SKEW

REVISIONS						SHEET NO.
NO.	BY:	DATE:	NO.	BY:	DATE:	S-11
1			3			TOTAL SHEETS
2			4			24

DRAWN BY : W. B. ALLEN DATE : 6/17
CHECKED BY : Z. H. BROWN DATE : 8/17
DESIGN ENGINEER OF RECORD: L. K. AUSTIN DATE : 5/18

DOCUMENT NOT CONSIDERED FINAL UNLESS ALL SIGNATURES COMPLETED

5/15/2018 3:02:24 PM R:\Structures\B5606_SMU_CWS_700ln.dgn