DocuSign Envelope ID: AD49546D-5BFE-4687-A3DE-BCD05980B178

NOTES

STIRRUPS IN CAP MAY BE SHIFTED AS NECESSARY TO CLEAR DOWELS.

★ INVERT ALTERNATE STIRRUPS.

GALVANIZE THE FULL LENGTH OF EACH INTERIOR BENT PILE IN ACCORDANCE WITH SECTION 1076 OF THE STANDARD SPECIFICATIONS.

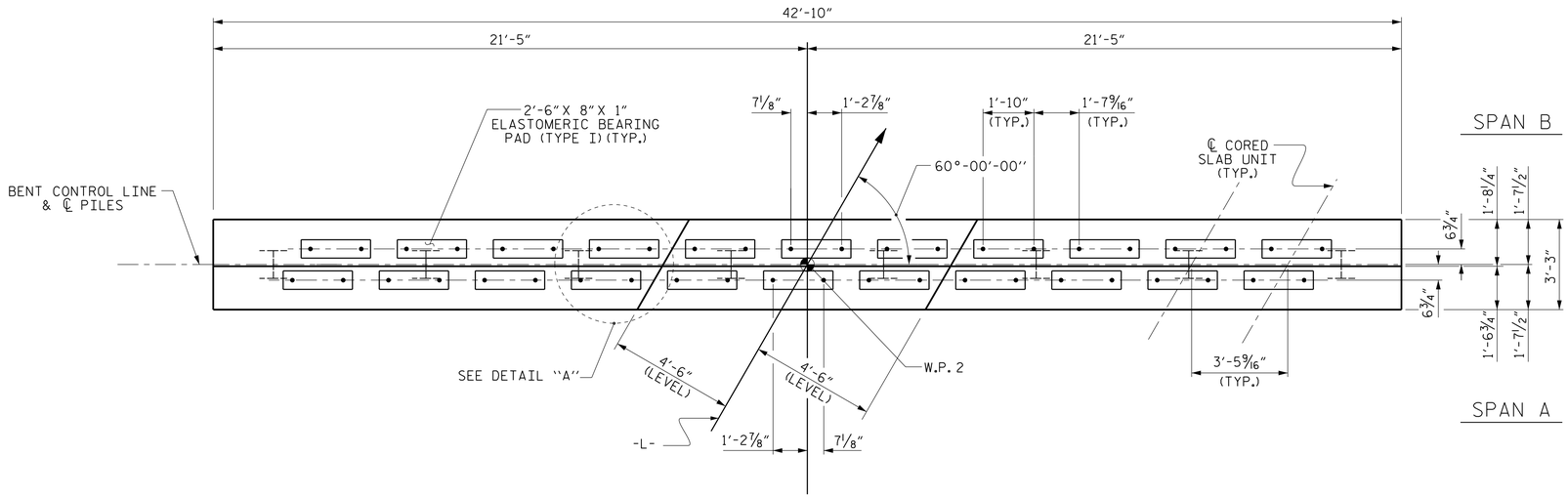

PLAN

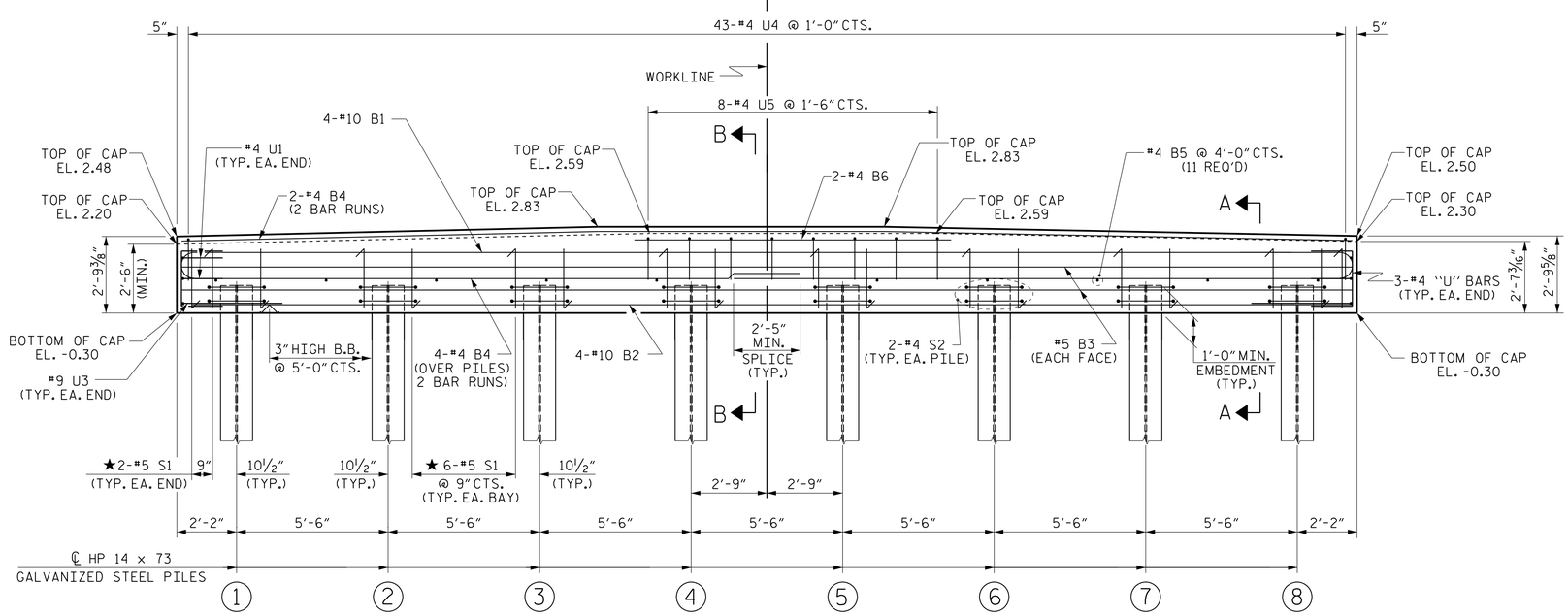

ELEVATION

FOR SECTION A-A & SECTION B-B, SEE SHEET 2 OF 2

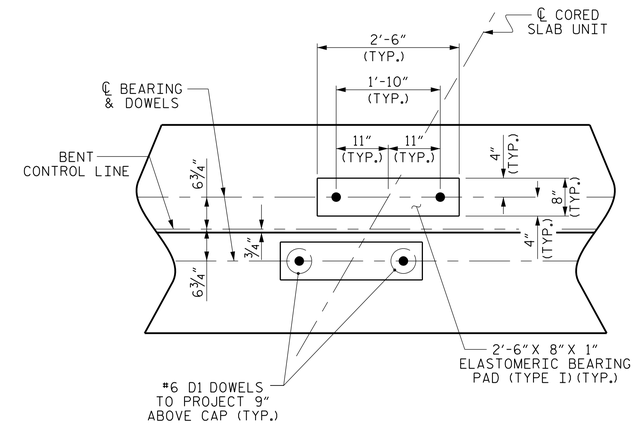

DETAIL "A"

(DIMENSIONS ARE TYPICAL EACH BEARING)

PROJECT NO. B-5606

PERQUIMANS COUNTY

STATION: 16+99.00 -L-

SHEET 1 OF 2

STATE OF NORTH CAROLINA
DEPARTMENT OF TRANSPORTATION
RALEIGH

SUBSTRUCTURE

BENT No. 1

DOCUMENT NOT CONSIDERED FINAL UNLESS ALL SIGNATURES COMPLETED

THIS STANDARD DRAWING REVIEWED & ADOPTED FOR USE AT THE REFERENCED LOCATION BY THE UNDERSIGNED:

NORTH CAROLINA PROFESSIONAL SEAL ENGINEER L. KEVIN AUSTIN

DocuSigned by: L. Kevin Austin 72F383720EA4D6...

5/15/2018

PLANS PREPARED BY:

CALYX ENGINEERS + CONSULTANTS
6750 TRYON ROAD
CARY, NC 27518
phone: 919.851.1912
CALYXengineers.com
NC License # F-1333

REVISIONS							SHEET NO.
NO.	BY:	DATE:	NO.	BY:	DATE:		S-17
1			3				TOTAL SHEETS
2			4				24

ASSEMBLED BY :	W. B. ALLEN	DATE :	8/17
CHECKED BY :	Z. H. BROWN	DATE :	8/17
DRAWN BY :	DGE	05/10	
CHECKED BY :	MKT	05/10	
REV. 6/17	MAA/THC		

STD. NO. 14"HP_BT_33_60S_<60'

5/15/2018 3:42:33 PM R:\Structures\B5606_SMU_BI_7100.dgn