DocuSign Envelope ID: AD49546D-5BFE-4687-A3DE-BCD05980B178

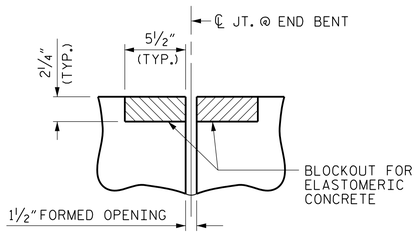

SECTION C-C
FOAM JOINT SEAL
(PRE-SAWED ELASTOMERIC
CONCRETE DIMENSIONS)

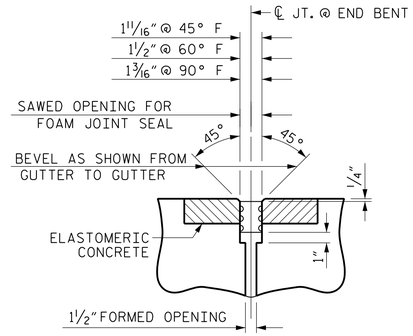

SECTION C-C
FOAM JOINT SEAL
(EXPANSION)

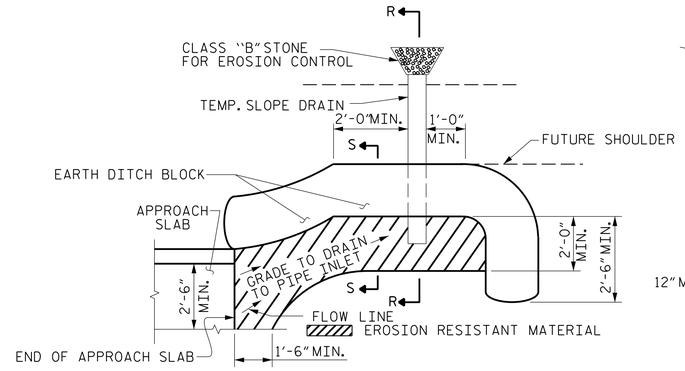

NOTE: IMMEDIATELY AFTER THE CONSTRUCTION OF THE APPROACH SLAB, THE CONTRACTOR SHALL PROVIDE TEMPORARY BERM AND SLOPE DRAIN. CONTRACTOR SHALL GRADE TO PIPE INLET AND PROVIDE EROSION RESISTANT MATERIAL AS SHOWN. THE EROSION RESISTANT MATERIAL SHALL BE EITHER 1) ASPHALT PLANT MIX, TYPE 1 OR TYPE 2, MIN. 2" DEPTH, 2) EROSION CONTROL MAT, OR 3) CONCRETE, AS DIRECTED BY THE ENGINEER. THE SLOPE DRAIN SHALL CONSIST OF A NON-PERFORATED TEMPORARY DRAINAGE PIPE, 12 INCHES IN DIAMETER.

PLAN VIEW

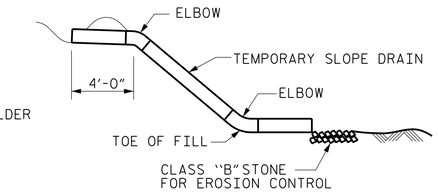

SECTION R-R

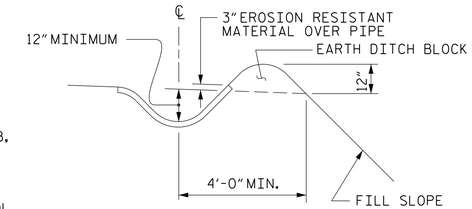

SECTION S-S

TEMPORARY BERM AND SLOPE DRAIN DETAILS

(TO BE USED WHEN SHOULDER BERM GUTTER IS REQUIRED)

ELASTOMERIC CONCRETE	
END BENT NO.	ELASTOMERIC CONCRETE ✳ (CU. FT.)
1	3.2
2	3.2
TOTAL	6.4

✳ BASED ON THE MINIMUM BLOCKOUT SHOWN.

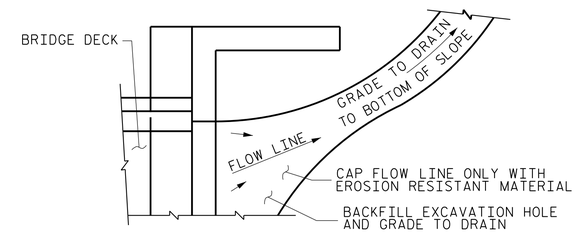

NOTE: IF THE APPROACH SLAB IS NOT CONSTRUCTED IMMEDIATELY AFTER THE BACKFILLING OF THE END BENT EXCAVATION, GRADE TO DRAIN TO THE BOTTOM OF THE SLOPE AND PROVIDE EROSION RESISTANT MATERIAL, SUCH AS FIBERGLASS ROVING OR AS DIRECTED BY THE ENGINEER TO PREVENT SOIL EROSION AND TO PROTECT THE AREA ADJACENT TO THE STRUCTURE. THE CONTRACTOR WILL BE REQUIRED TO REMOVE THESE MATERIALS PRIOR TO CONSTRUCTION OF THE APPROACH SLAB.

TEMPORARY DRAINAGE DETAIL

PROJECT NO. B-5606

PERQUIMANS COUNTY

STATION: 16+99.00 -L-

SHEET 2 OF 2

PLANS PREPARED BY:

CALYX ENGINEERS + CONSULTANTS
6750 TRYON ROAD
CARY, NC 27518
phone: 919.851.1912
CALYXengineers.com
NC License # F-1333

DOCUMENT NOT CONSIDERED FINAL UNLESS ALL SIGNATURES COMPLETED

THIS STANDARD DRAWING REVIEWED & ADOPTED FOR USE AT THE REFERENCED LOCATION BY THE UNDERSIGNED:

NORTH CAROLINA PROFESSIONAL SEAL 036 ENGINEER KEVIN AUSTIN
DocuSigned by: L. Kevin Austin 72FB372D5D4D8...
5/15/2018

STATE OF NORTH CAROLINA
DEPARTMENT OF TRANSPORTATION
RALEIGH

STANDARD

BRIDGE APPROACH
SLAB DETAILS

REVISIONS						SHEET NO.
NO.	BY:	DATE:	NO.	BY:	DATE:	S-23
1			3			TOTAL SHEETS
2			4			24

STD. NO. BAS4

ASSEMBLED BY :	W. B. ALLEN	DATE :	8/17
CHECKED BY :	Z. H. BROWN	DATE :	8/17

DRAWN BY :	FCJ	11/88	REV. 10/1/11	MAA/GM
CHECKED BY :	ARB	11/88	REV. 7/12	MAA/GM
			REV. 6/13	MAA/GM

5/15/2018 3:42:44 PM R:\Structures\B5606_SMU_AS2_7001.dgn