DocuSign Envelope ID: AD49546D-5BFE-4687-A3DE-BCD05980B178

9/2/99

PAVEMENT SCHEDULE

C1	PROP. APPROX. 1 1/2″ ASPHALT CONCRETE SURFACE COURSE TYPE S9.5B, AT AN AVERAGE RATE OF 168 LBS. PER SQ. YD.
C2	PROP. APPROX. 2.5″ ASPHALT CONCRETE SURFACE COURSE TYPE S9.5B, AT AN AVERAGE RATE OF 140 LBS. PER SQ. YD. IN EACH OF TWO LAYERS.
C3	PROP. VAR. DEPTH ASPHALT CONCRETE SURFACE COURSE TYPE S9.5B, AT AN AVERAGE RATE OF 112 LBS. PER SQ. YD. PER 1″ DEPTH. TO BE PLACED IN LAYERS NOT TO EXCEED 1.5″ IN DEPTH.
E1	PROP. APPROX. 5.5″ ASPHALT CONCRETE BASE COURSE, TYPE B25.0C, AT AN AVERAGE RATE OF 342 LBS. PER SQ. YD. IN EACH OF TWO LAYERS.
E2	PROP. VAR. DEPTH ASPHALT CONCRETE BASE COURSE, TYPE B25.0C, AT AN AVERAGE RATE OF 114 LBS. PER SQ. YD. PER 1″ DEPTH. TO BE PLACE IN LAYERS NOT LESS THAN 3″ IN DEPTH OR GREATER THAN 5.5″ IN DEPTH.
R	PROP. SHOULDER BERM GUTTER
T	EARTH MATERIAL.
U	EXISTING PAVEMENT.
W	VARIABLE DEPTH ASPHALT PAVEMENT (SEE WEDGING DETAILS)

NOTE: PAVEMENT EDGE SLOPES ARE 1:1 UNLESS SHOWN OTHERWISE.

INSET "A"

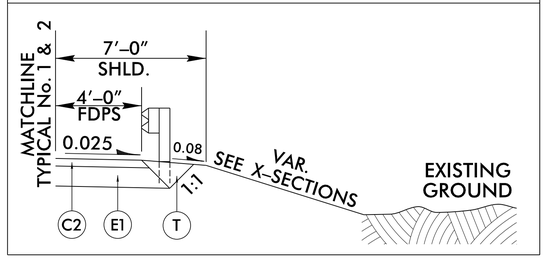

INSET "B"

SHOULDER BERM LOCATIONS:
MIRRORED –L– STA. 5+74.5 TO 16+14 (RT.)
–L– STA. 15+60.5 TO 15+96 (LT.)

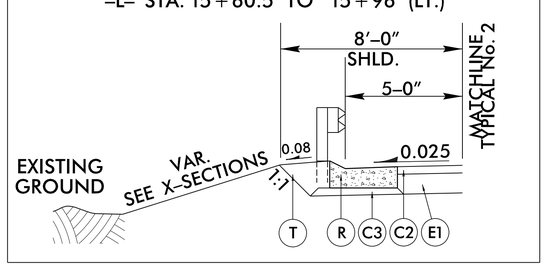

℄ –L– (SR 1338 WYNNE FORK RD.)

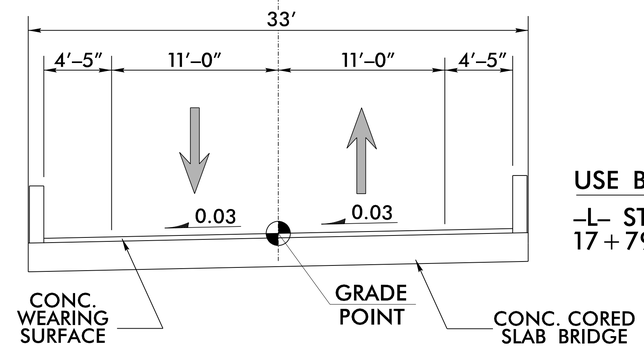

BRIDGE SKETCH NO. 1
BRIDGE #11

USE BRIDGE SKETCH NO. 1 AS FOLLOWS:

–L– STA. 16+19.00 BEGIN BRIDGE) TO
17+79.00 (END BRIDGE)

℄ –L– (SR 1338 WYNNE FORK RD.)

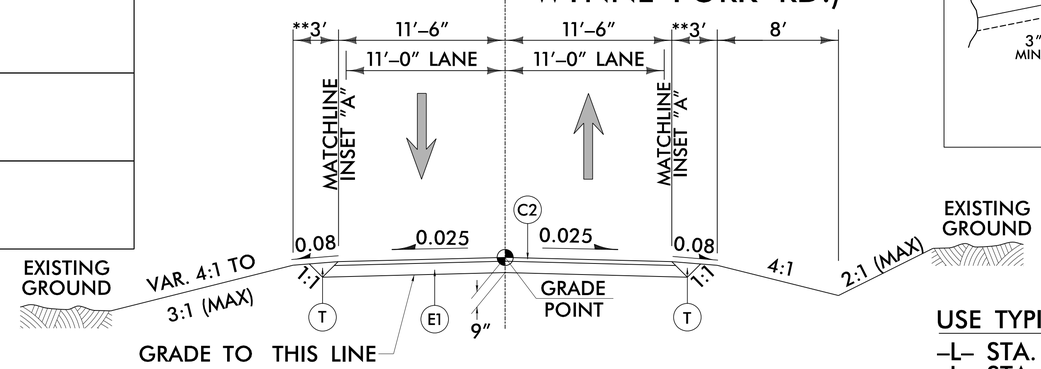

TYPICAL SECTION NO. 2

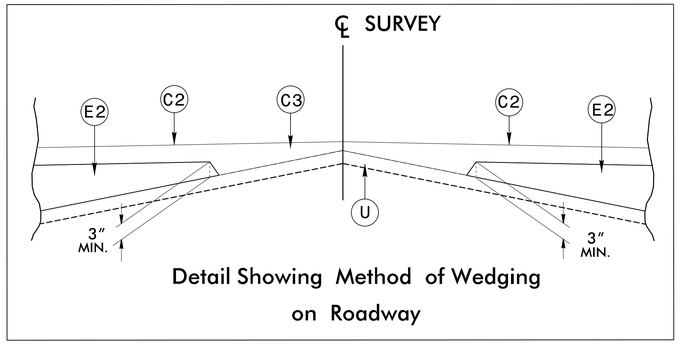

USE TYPICAL SECTION NO. 2 AS FOLLOWS:

–L– STA. 14+00.00 TO 15+10.00
–L– STA. 19+75.00 TO 20+75.00

℄ –L– (SR 1338 WYNNE FORK RD.)

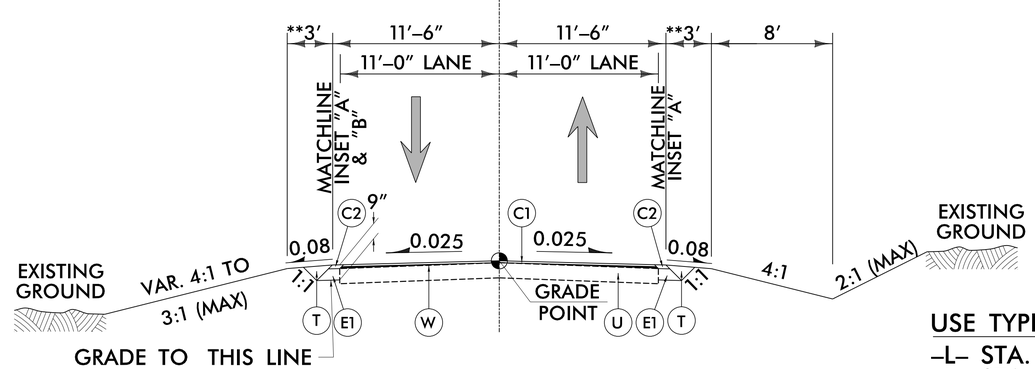

TYPICAL SECTION NO. 3

USE TYPICAL SECTION NO. 3 AS FOLLOWS:

–L– STA. 15+10.00 TO 16+19.00 (BEGIN BRIDGE)
–L– STA. 17+79.00 (END BRIDGE) TO 19+75.00

CALYX
ENGINEERS + CONSULTANTS
6750 TRYON ROAD
CARY, NC 27518
phone: 919.851.1912
CALYXengineers.com
NC License # F-1333

PROJECT REFERENCE NO.	SHEET NO.
B-5606	2A-1
ROADWAY DESIGN ENGINEER	PAVEMENT DESIGN ENGINEER

NORTH CAROLINA PROFESSIONAL SEAL ENGINEER STEPHEN C. BROWDER
DocuSigned by: Stephen C. Browder
5/16/2018

5/10/2018
R:\Roadway\Proj\Perquimans 11_RDY_TYP.dgn