DocuSign Envelope ID: AD49546D-5BFE-4687-A3DE-BCD05980B178

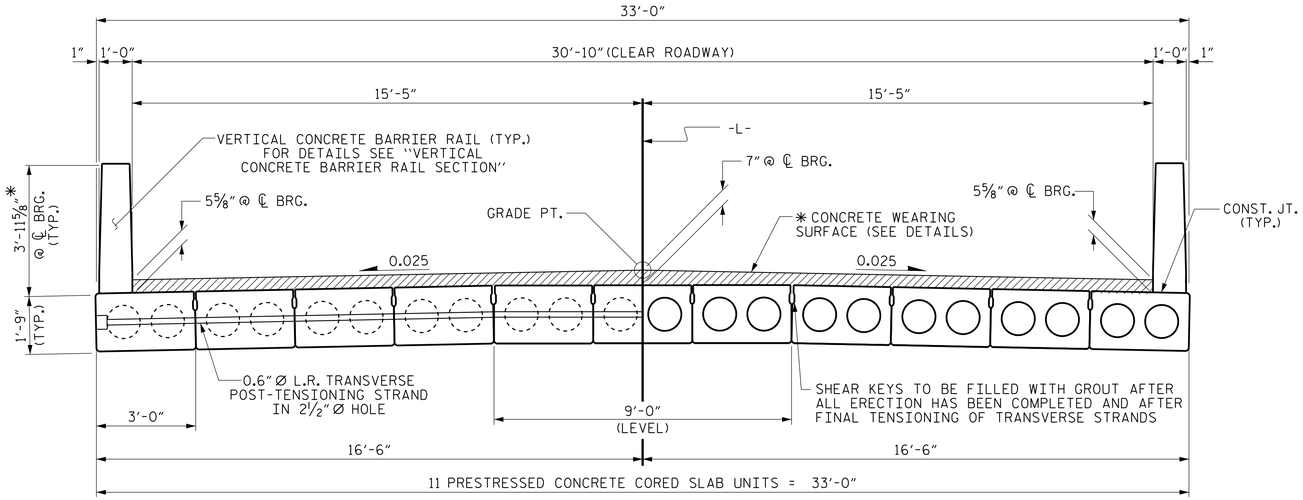

TYPICAL SECTION

✱-THE MAXIMUM BARRIER RAIL HEIGHT AND CONCRETE THICKNESS IS SHOWN. THE HEIGHT OF THE BARRIER RAIL AND CONCRETE THICKNESS VARIES WHILE THE TOP OF THE BARRIER RAIL FOLLOWS THE PROFILE OF THE GUTTERLINE. FOR RAIL HEIGHT DETAILS AND CONCRETE THICKNESS SEE THE "VERTICAL CONCRETE BARRIER RAIL SECTION" DETAIL.

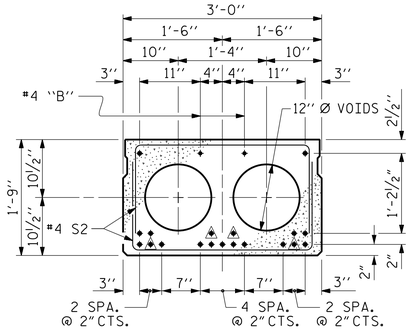

INTERIOR SLAB SECTION (50' UNIT)

(19 STRANDS REQUIRED)

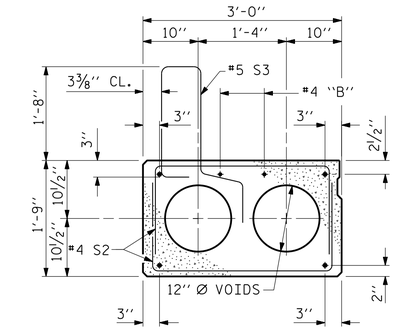

EXT. SLAB SECTION

(FOR PRESTRESSED STRAND LAYOUT, SEE INTERIOR SLAB SECTION.)

0.6" Ø LOW RELAXATION STRAND LAYOUT

BOND SHALL BE BROKEN ON THESE STRANDS FOR A DISTANCE OF 6'-0" FROM END OF CORED SLAB UNIT. SEE STANDARD SPECIFICATIONS, ARTICLE 1078-7.

DEBONDING LEGEND

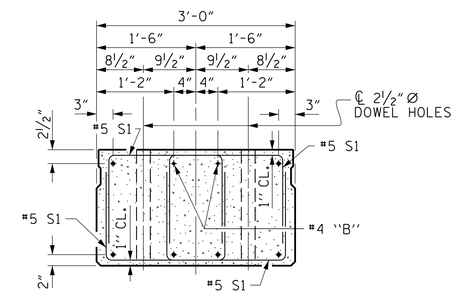

END ELEVATION

SHOWING PLACEMENT OF DOUBLE STIRRUPS AND LOCATION OF DOWEL HOLES. (STRAND LAYOUT NOT SHOWN.) INTERIOR SLAB UNIT SHOWN-EXTERIOR SLAB UNIT SIMILAR EXCEPT SHEAR KEY LOCATION.

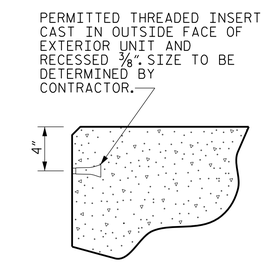

THREADED INSERT DETAIL

EXPANSION END

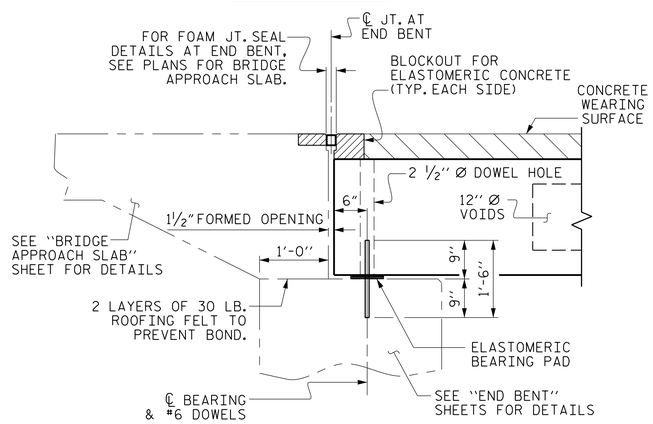

SECTION AT END BENT NO. 1

(END BENT NO. 2 SIM.)

FIXED END FIXED END

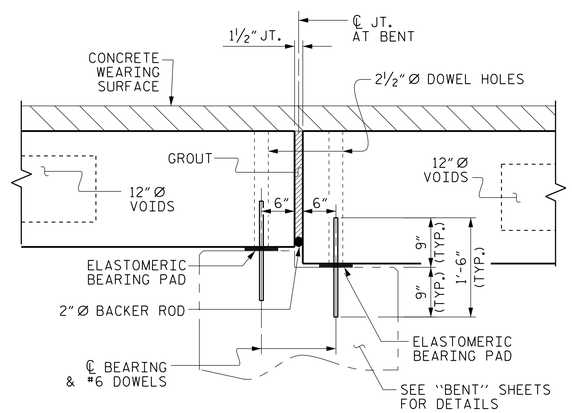

SECTION AT BENT NO. 1

(BENT NO. 2 SIM.)

SHEAR KEY DETAIL

NOTE: OMIT SHEAR KEY ON OUTSIDE FACE OF EXTERIOR CORED SLABS.

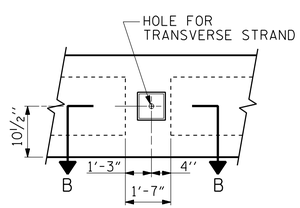

ELEVATION VIEW

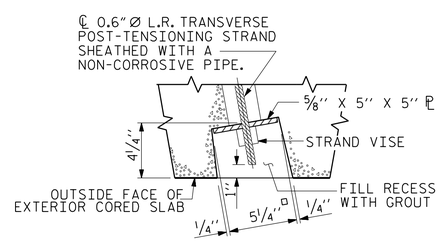

SECTION B-B

GROUTED RECESS AT END OF POST-TENSIONED STRAND OF CORED SLABS

PROJECT NO. B-5606

PERQUIMANS COUNTY

STATION: 16+99.00 -L-

SHEET 1 OF 6

STATE OF NORTH CAROLINA
DEPARTMENT OF TRANSPORTATION
RALEIGH

3'-0" X 1'-9" PRESTRESSED CONCRETE CORED SLAB UNIT SPANS A & C 60° SKEW

NORTH CAROLINA PROFESSIONAL ENGINEER SEAL 19661 L. KEVIN AUSTIN

Docusigned by: L. Kevin Austin 7/26/2018 7:20:53 AM MDT

5/15/2018

PLANS PREPARED BY:

CALYX ENGINEERS + CONSULTANTS
6750 TRYON ROAD
CARY, NC 27518
phone: 919.851.1912
CALYXengineers.com
NC License # F-1333

DOCUMENT NOT CONSIDERED FINAL UNLESS ALL SIGNATURES COMPLETED

REVISIONS						SHEET NO.
NO.	BY:	DATE:	NO.	BY:	DATE:	S-5
1			3			TOTAL SHEETS
2			4			24

DRAWN BY :	W. B. ALLEN	DATE :	7/17
CHECKED BY :	Z. H. BROWN	DATE :	7/17
DESIGN ENGINEER OF RECORD:	L. K. AUSTIN	DATE :	5/18

5/15/2018 3:28 PM R:\Structures\B5606_SMLCSI_TYP01.dgn