DocuSign Envelope ID: AD49546D-5BFE-4687-A3DE-BCD05980B178

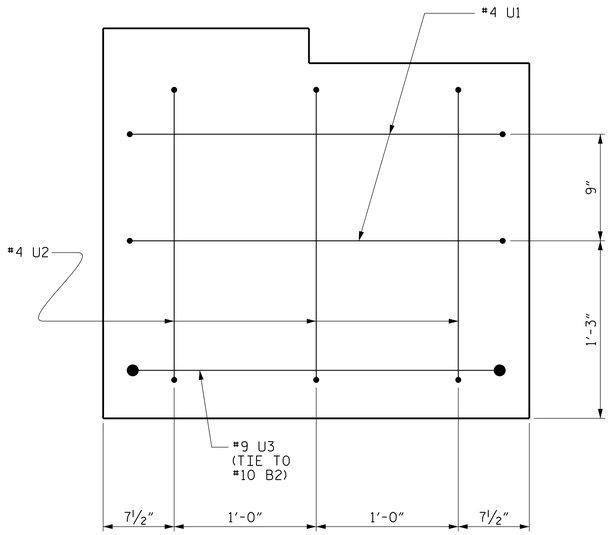

END OF CAP VIEW

(SIMILAR BOTH ENDS)

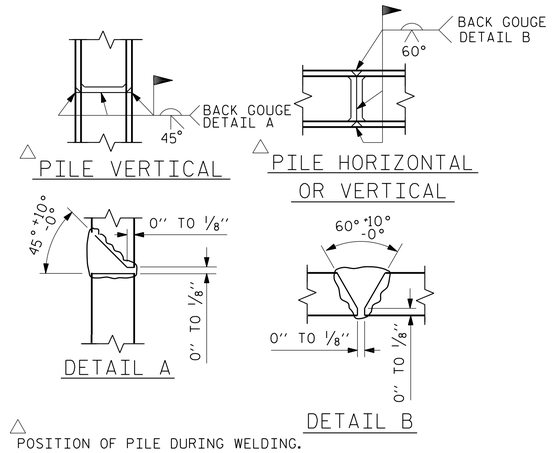

PILE SPLICE DETAILS

BAR TYPES

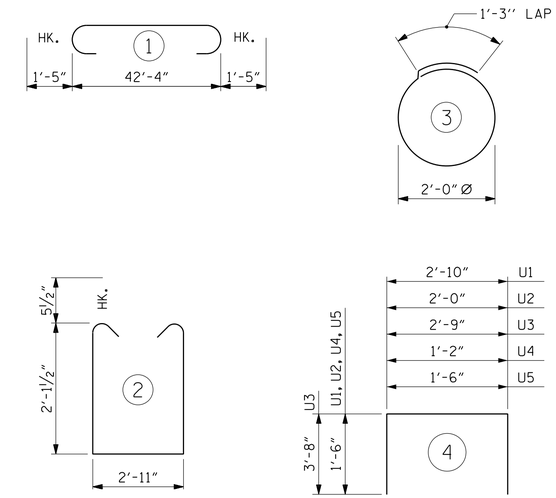

ALL BAR DIMENSIONS ARE OUT TO OUT.

BILL OF MATERIAL

FOR ONE BENT

BAR	NO.	SIZE	TYPE	LENGTH	WEIGHT
B1	4	#10	1	45'-2"	777
B2	4	#10	STR	42'-6"	732
B3	4	#5	STR	42'-6"	177
B4	12	#4	STR	22'-6"	180
B5	11	#4	STR	2'-11"	21
B6	2	#4	STR	11'-6"	15
D1	44	#6	STR	1'-6"	99
S1	46	#5	2	8'-1"	388
S2	16	#4	3	7'-7"	81
U1	4	#4	4	5'-10"	16
U2	6	#4	4	5'-0"	20
U3	2	#9	4	10'-1"	69
U4	43	#4	4	4'-2"	120
U5	8	#4	4	4'-6"	24

REINFORCING STEEL (FOR ONE BENT) 2719 LBS

CLASS A CONCRETE BREAKDOWN (FOR ONE BENT)

TOTAL CLASS A CONCRETE 14.7 C.Y.

HP 14 X 73 GALVANIZED STEEL PILES (FOR ONE BENT)

No. 8 LIN. FT. 760

PILE DRIVING EQUIPMENT SETUP FOR HP 14 X 73 GALVANIZED STEEL PILES (FOR ONE BENT) NO: 8

PILE REDRIVES NO: 4

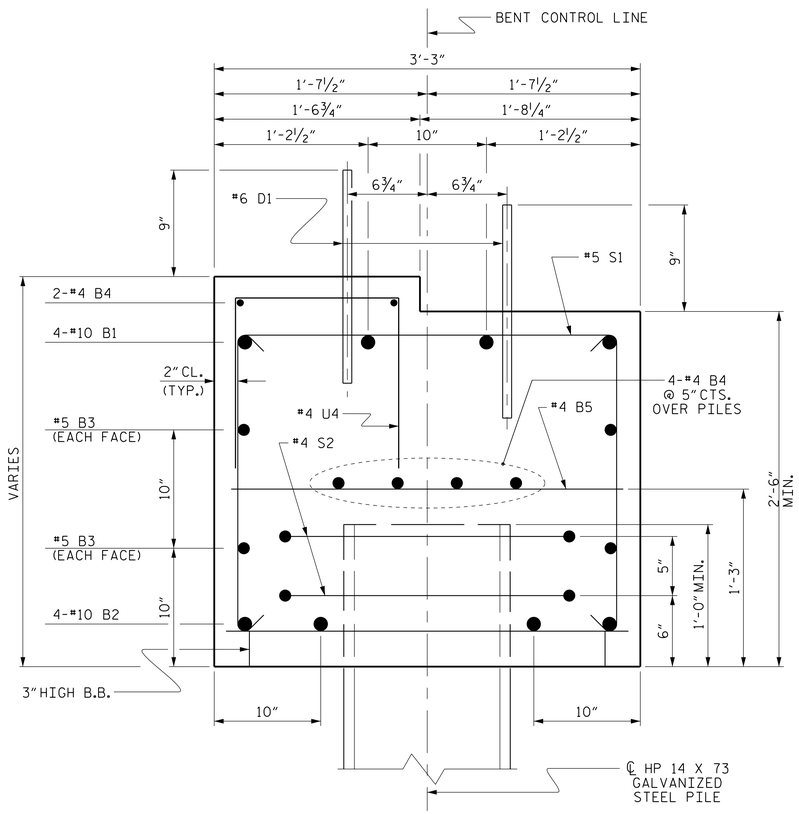

SECTION A-A

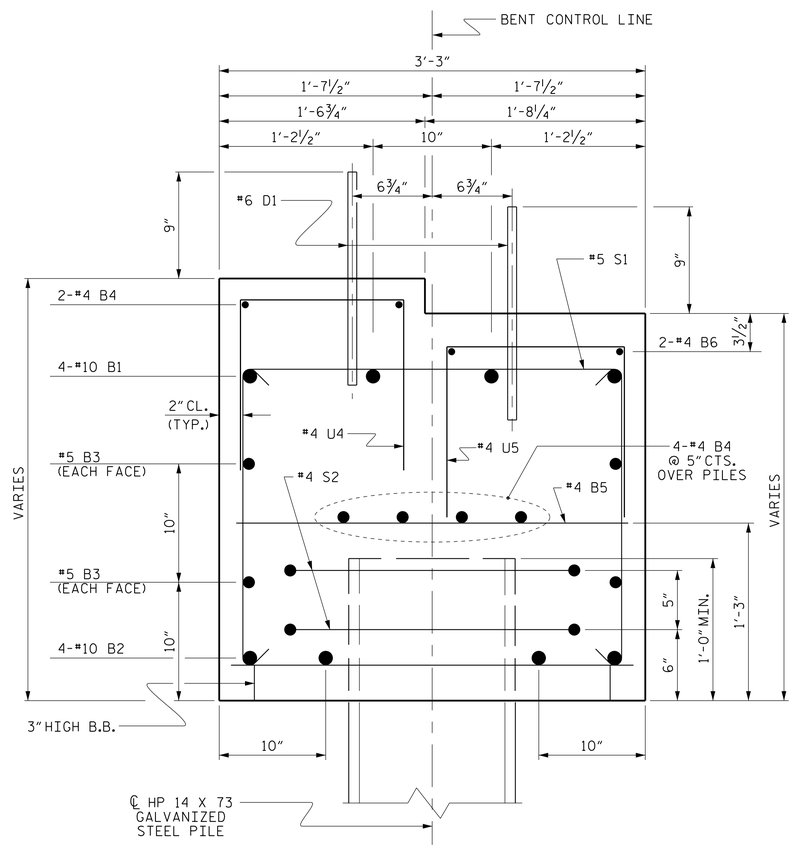

SECTION B-B

PLANS PREPARED BY:

CALYX ENGINEERS + CONSULTANTS
6750 TRYON ROAD
CARY, NC 27518
phone: 919.851.1912
CALYXengineers.com
NC License # F-1333

PROJECT NO. B-5606

PERQUIMANS COUNTY

STATION: 16+99.00 -L-

SHEET 2 OF 2

DOCUMENT NOT CONSIDERED FINAL UNLESS ALL SIGNATURES COMPLETED

THIS STANDARD DRAWING REVIEWED & ADOPTED FOR USE AT THE REFERENCED LOCATION BY THE UNDERSIGNED:

NORTH CAROLINA PROFESSIONAL ENGINEER SEAL 036661 KEVIN AUSTIN

DocuSigned by: L. Kevin Austin 72F7B372D6A4C8A...

5/15/2018

STATE OF NORTH CAROLINA
DEPARTMENT OF TRANSPORTATION
RALEIGH

SUBSTRUCTURE

BENT No. 2

REVISIONS						SHEET NO.
NO.	BY:	DATE:	NO.	BY:	DATE:	S-20
1			3			TOTAL SHEETS
2			4			24

ASSEMBLED BY : W. B. ALLEN DATE : 8/17
CHECKED BY : Z. H. BROWN DATE : 8/17

DRAWN BY : DGE 05/10
CHECKED BY : MKT 05/10
REV. 6/17 MAA/THC

STD. NO. 14" HP_BT_33_60&120S_<60'