DocuSign Envelope ID: 85A5664C-570F-47C7-8C38-D5CF185A29D5

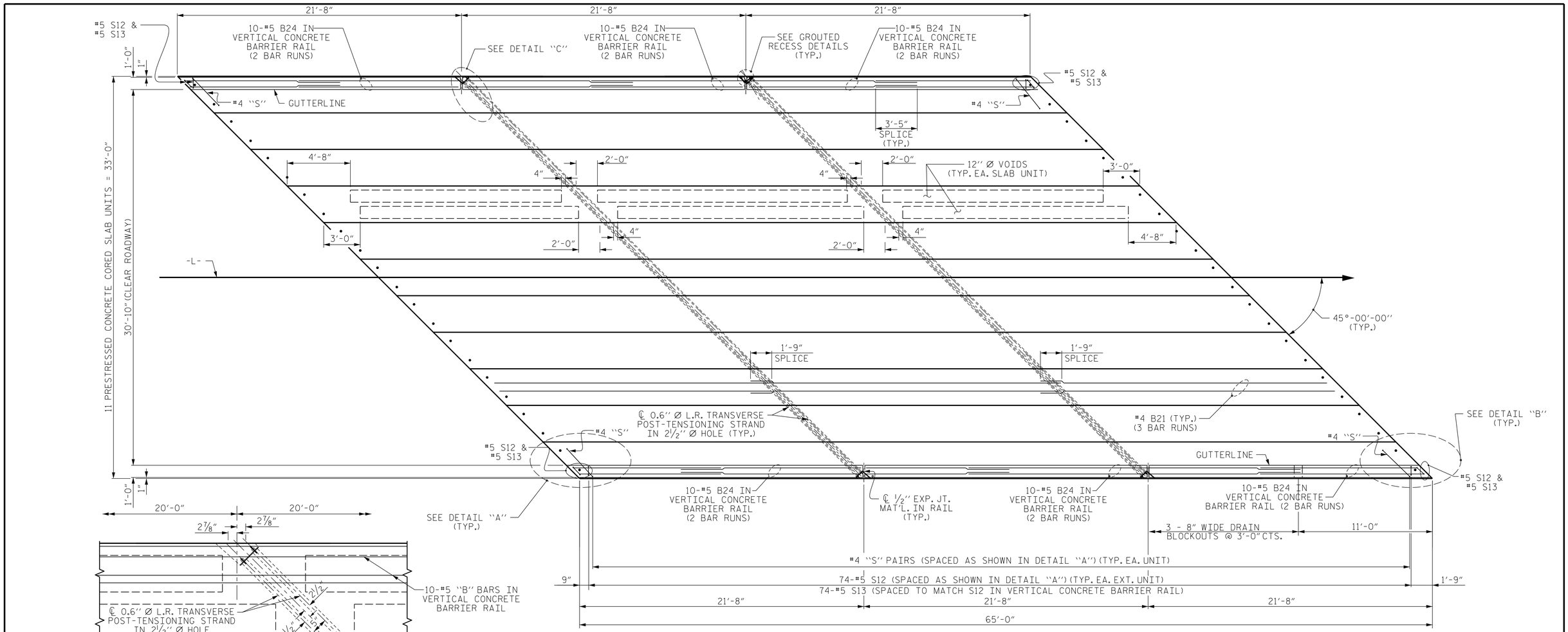

PLAN OF UNIT

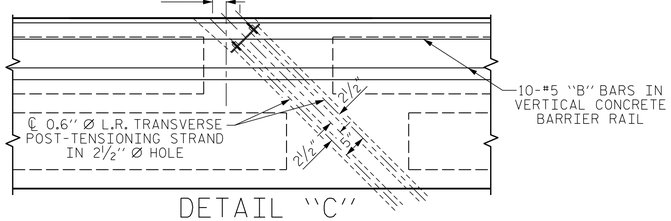

DETAIL "C"

#4 S11 BARS MAY BE SHIFTED AS NECESSARY TO MAINTAIN 1" CLEAR TO GROUTED RECESS AND 2½" Ø TRANSVERSE POST-TENSIONING STRAND HOLES

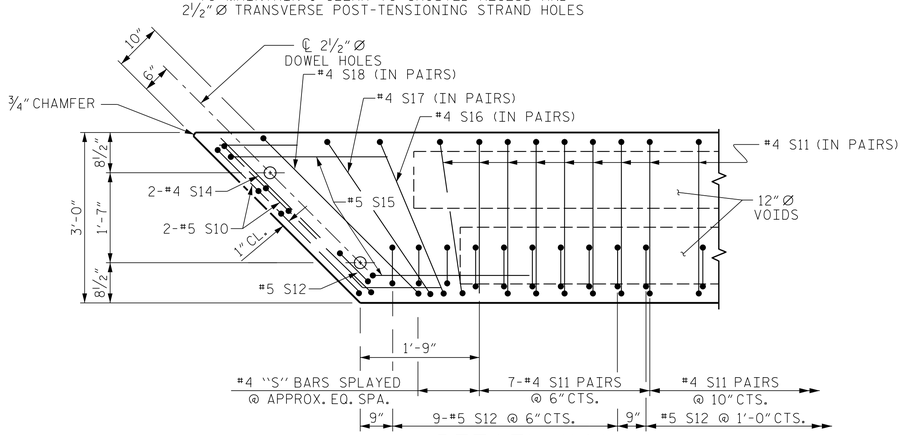

DETAIL "A"

(SIMILAR EACH END OF UNIT)
NOTE: EXTERIOR UNIT SHOWN - INTERIOR UNIT SIMILAR EXCEPT OMIT #5 S12 BARS.

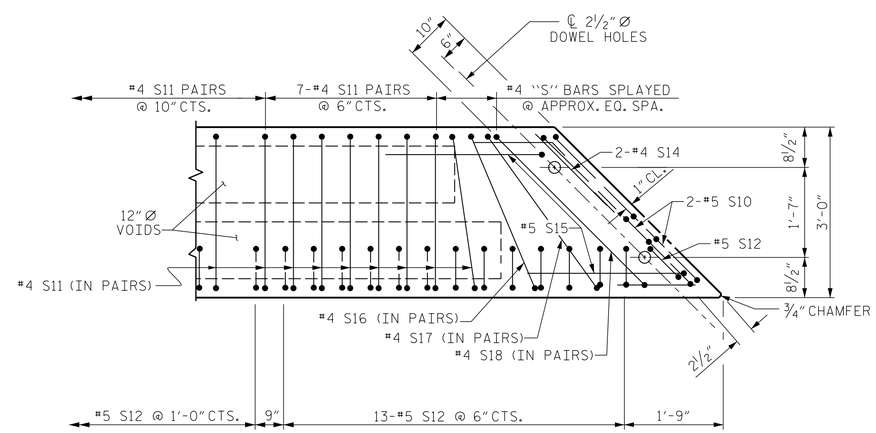

DETAIL "B"

(SIMILAR EACH END OF UNIT)
NOTE: EXTERIOR UNIT SHOWN - INTERIOR UNIT SIMILAR EXCEPT OMIT #5 S12 BARS.

PROJECT NO. 17BP.1.R.79
NORTHAMPTON COUNTY
STATION: 15+83.50 -L-

SHEET 3 OF 4

ENGINEER OF RECORD
4/10/2018
NORTH CAROLINA PROFESSIONAL SEAL 14091 ENGINEER BUCK CHARLES HUNT

DocuSigned by: Buck Charles Hunt
2F15C8073B4A4...

WETHERILL ENGINEERING
1223 Jones Franklin Rd.
Raleigh, N.C. 27606
Bus: 919 851 8077
Fax: 919 851 8107
LICENSE NO. F-0377

STATE OF NORTH CAROLINA
DEPARTMENT OF TRANSPORTATION
RALEIGH

PLAN OF 65' UNIT 30'-10" CLEAR ROADWAY 45° SKEW

REVISIONS						SHEET NO.
NO.	BY:	DATE:	NO.	BY:	DATE:	S-7
1			3			TOTAL SHEETS
2			4			19

DRAWN BY : J. PENDERGRAFT DATE : 6-17
CHECKED BY : B.C. HUNT DATE : 6-17

DOCUMENT NOT CONSIDERED FINAL UNLESS ALL SIGNATURES COMPLETED

P:\2017\17118.01_Northampton-10\Structures\DGN\NORTHAMPTON 10 PS.dgn
4/10/2018 9:21:18 AM