DocuSign Envelope ID: 85A5664C-570F-47C7-8C38-D5CF185A29D5

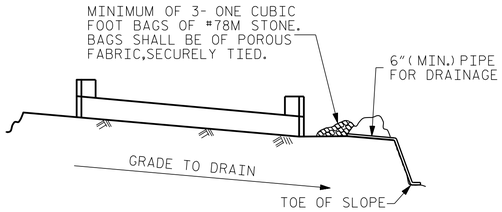


BAGGED STONE AND PIPE SHALL BE PLACED IMMEDIATELY AFTER COMPLETION OF END BENT EXCAVATION. PIPE MAY BE EITHER CONCRETE, CORRUGATED STEEL, CORRUGATED ALUMINUM ALLOY, OR CORRUGATED PLASTIC. PERFORATED PIPE WILL NOT BE ALLOWED.

BAGGED STONE SHALL REMAIN IN PLACE UNTIL THE ENGINEER DIRECTS THAT IT BE REMOVED. THE CONTRACTOR SHALL REMOVE AND DISPOSE OF SILT ACCUMULATIONS AT BAGGED STONE WHEN SO DIRECTED BY THE ENGINEER. BAGS SHALL BE REMOVED AND REPLACED WHENEVER THE ENGINEER DETERMINES THAT THEY HAVE DETERIORATED AND LOST THEIR EFFECTIVENESS.

NO SEPARATE PAYMENT WILL BE MADE FOR THIS WORK AND THE ENTIRE COST OF THIS WORK SHALL BE INCLUDED IN THE UNIT CONTRACT PRICE BID FOR THE SEVERAL PAY ITEMS.

## TEMPORARY DRAINAGE AT END BENT

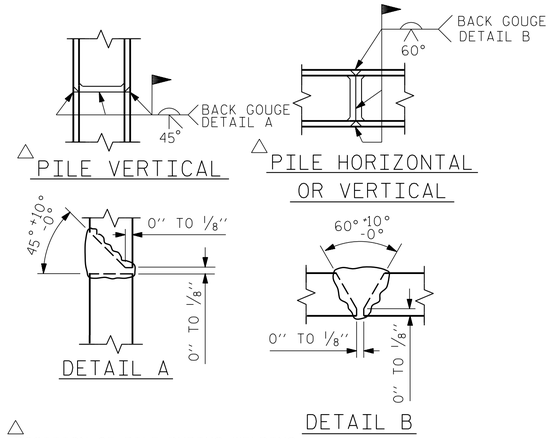


△ POSITION OF PILE DURING WELDING.

## PILE SPLICE DETAILS

## BAR TYPES

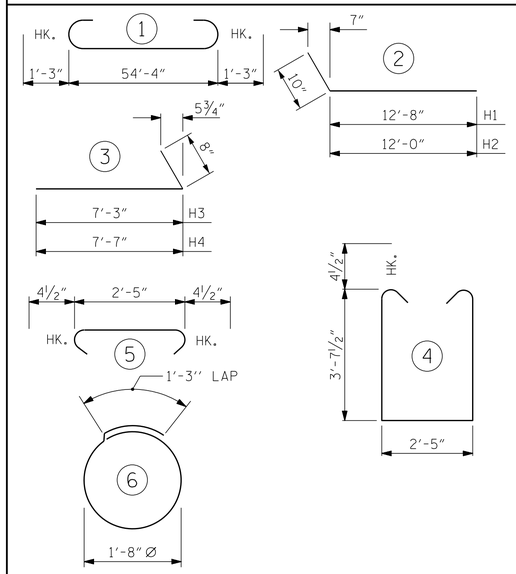


ALL BAR DIMENSIONS ARE OUT TO OUT.

## BILL OF MATERIAL

### END BENT No. 1

| BAR | NO. | SIZE | TYPE | LENGTH | WEIGHT |
|---|---|---|---|---|---|
| B1 | 8 | #9 | 1 | 56'-10" | 1546 |
| B2 | 28 | #4 | STR | 28'-7" | 535 |
| B3 | 14 | #4 | STR | 2'-5" | 23 |
| | | | | | |
| D1 | 22 | #6 | STR | 1'-6" | 50 |
| | | | | | |
| H1 | 10 | #5 | 2 | 13'-6" | 141 |
| H2 | 10 | #5 | 2 | 12'-10" | 134 |
| H3 | 10 | #4 | 3 | 7'-11" | 53 |
| H4 | 10 | #4 | 3 | 8'-3" | 55 |
| | | | | | |
| K1 | 16 | #4 | STR | 4'-1" | 44 |
| | | | | | |
| S1 | 56 | #4 | 4 | 10'-5" | 390 |
| S2 | 56 | #4 | 5 | 3'-2" | 118 |
| S3 | 28 | #4 | 6 | 6'-6" | 122 |
| | | | | | |
| V1 | 62 | #4 | STR | 6'-2" | 255 |
| | | | | | |

REINFORCING STEEL 3,466 LBS.

CLASS A CONCRETE BREAKDOWN

POUR #1 CAP, LOWER PART OF WINGS 25.1 C.Y.

POUR #2 UPPER PART OF WINGS 2.5 C.Y.

TOTAL CLASS A CONCRETE 27.6 C.Y.

HP 12 X 53 GALVANIZED STEEL PILES
NO: 7 LIN. FT.= 574

PILE DRIVING EQUIPMENT SETUP FOR HP 12 X 53 GALVANIZED STEEL PILES NO: 7

PILE REDRIVES NO: 4

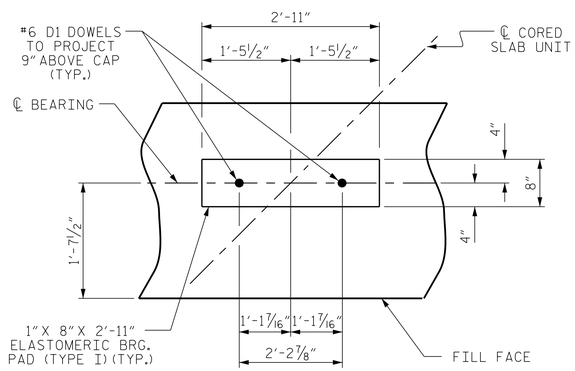


## DETAIL "A"

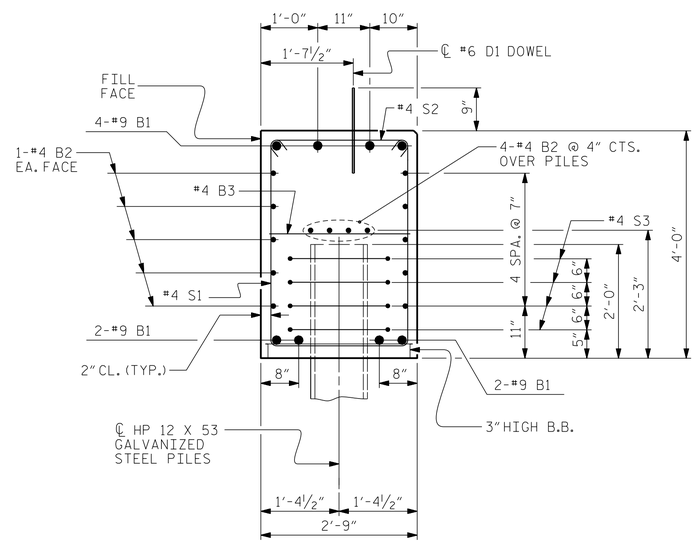


## SECTION A-A

PROJECT NO. 17BP.1.R.79
NORTHAMPTON COUNTY
STATION: 15+83.50 -L-

SHEET 3 OF 3

ENGINEER OF RECORD
4/10/2018

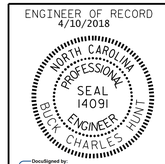


Docusigned by:
Buck Charles Hunt
2F15C8587B3A4EC...

WETHERILL ENGINEERING
1223 Jones Franklin Rd.
Raleigh, N.C. 27606
Bus: 919 851 8077
Fax: 919 851 8107
LICENSE NO. F-0377

STATE OF NORTH CAROLINA
DEPARTMENT OF TRANSPORTATION
RALEIGH

SUBSTRUCTURE

END BENT No. 1
DETAILS

| REVISIONS | | | | | | SHEET NO. |
|---|---|---|---|---|---|---|
| NO. | BY: | DATE: | NO. | BY: | DATE: | S-12 |
| 1 | | | 3 | | | TOTAL SHEETS |
| 2 | | | 4 | | | 19 |

DOCUMENT NOT CONSIDERED FINAL UNLESS ALL SIGNATURES COMPLETED

DRAWN BY : D. HODGE DATE : 6/17
CHECKED BY : B.C. HUNT DATE : 6/17

P:\2017\17118.01_Northampton-10\Structures\DGN\NORTHAMPTON 10 EBT.dgn
4/10/2018 9:29:20 AM