DocuSign Envelope ID: 85190E4C-03E1-4110-9AB1-CD58CD17D505

| PROJECT REFERENCE NO. | SHEET NO. |
|---|---|
| 17BP.1.R.80 | 2C-2 |

**DOCUMENT NOT CONSIDERED FINAL UNLESS ALL SIGNATURES COMPLETED**

STATE OF NORTH CAROLINA
DEPT. OF TRANSPORTATION
DIVISION OF HIGHWAYS
RALEIGH, N.C.

ROADWAY DETAIL DRAWING FOR
**GUARDRAIL INSTALLATION**

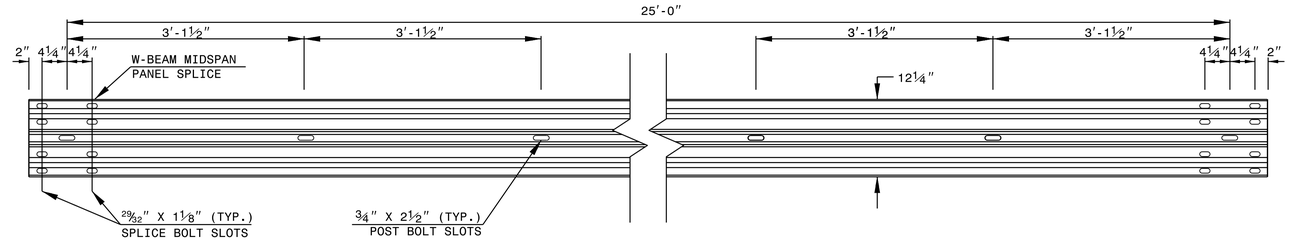


## STANDARD W-BEAM GUARDRAIL

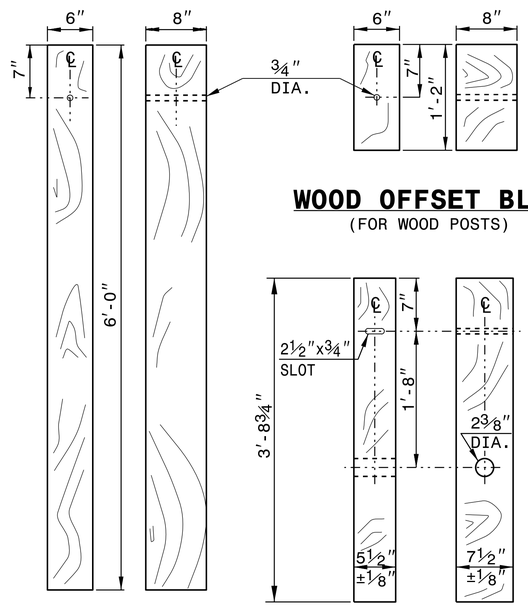


**STANDARD LINE POST**

**WOOD OFFSET BLOCK**
(FOR WOOD POSTS)

**SHORT WOOD BREAKAWAY POST**

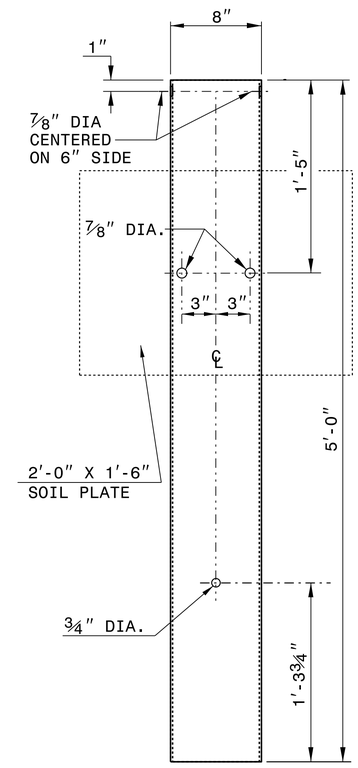


**STEEL TUBE**
TS 6"x8"x0.1875"

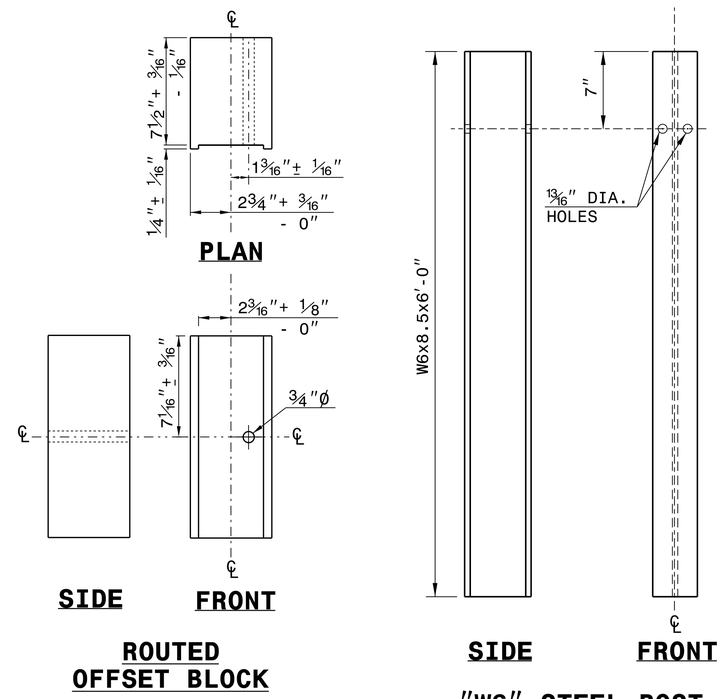


## SYSTEM PARTS

SHEET 6 OF 8
**862D02**

STATE OF NORTH CAROLINA
DEPT. OF TRANSPORTATION
DIVISION OF HIGHWAYS
RALEIGH, N.C.

ROADWAY DETAIL DRAWING FOR
**GUARDRAIL INSTALLATION**

SHEET 6 OF 8
**862D02**

8/27/2018

NORTH CAROLINA PROFESSIONAL SEAL 022966 ENGINEER JOEL S. HOWERTON

DocuSigned by: Joel S. Howerton

**CONTRACTS STANDARDS AND DEVELOPMENT UNIT**
Office 919-707-6950 FAX 919-250-4119

**SEE TITLE BLOCK**

ORIGINAL BY: J.HOWERTON DATE: 3-7-2018
MODIFIED BY: DATE:
CHECKED BY: DATE:
FILE SPEC.: