DocuSign Envelope ID: C51E1FCC-0CB3-45C5-9C1F-27340A6FAEDE

NOTES

STIRRUPS IN CAP MAY BE SHIFTED AS NECESSARY TO CLEAR DOWELS.

THE CONCRETE IN THE SHADED AREA OF THE WING SHALL BE POURED AFTER THE VERTICAL CONCRETE BARRIER RAIL IS CAST IF SLIP FORMING IS USED.

FOR PILE SPLICE DETAILS, SEE SHEET 4 OF 4.

FOR WING DETAILS, SEE SHEET 3 OF 4.

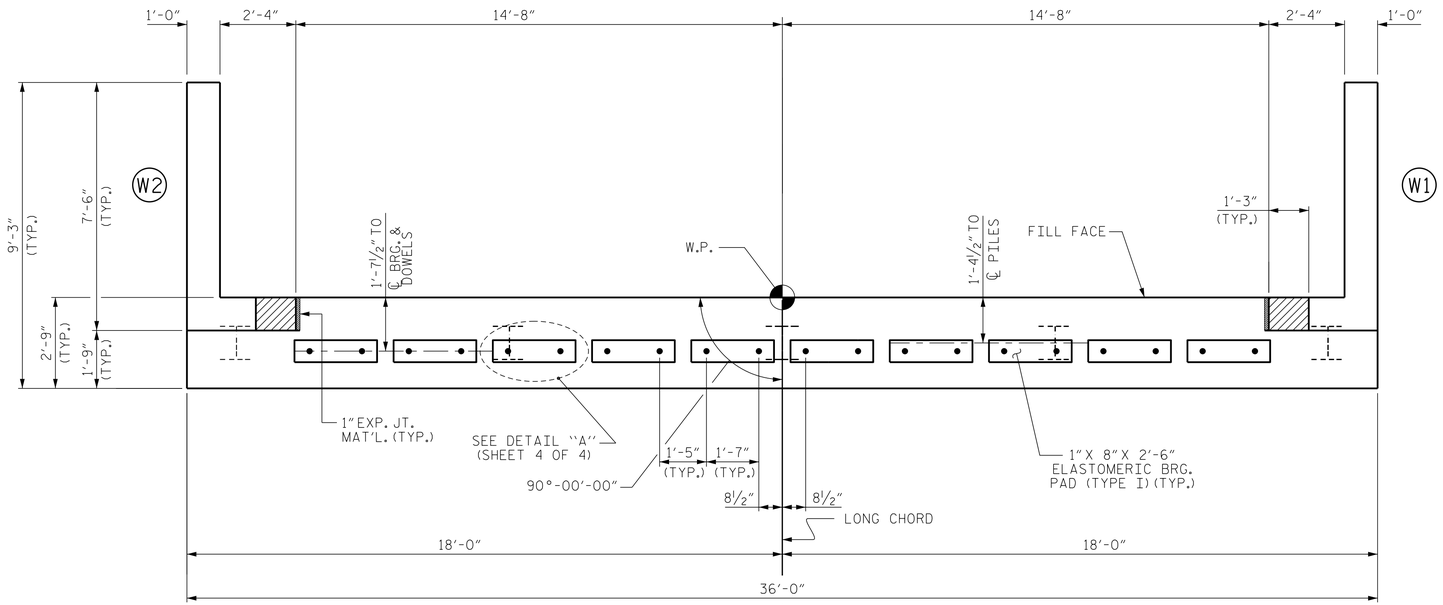

PLAN

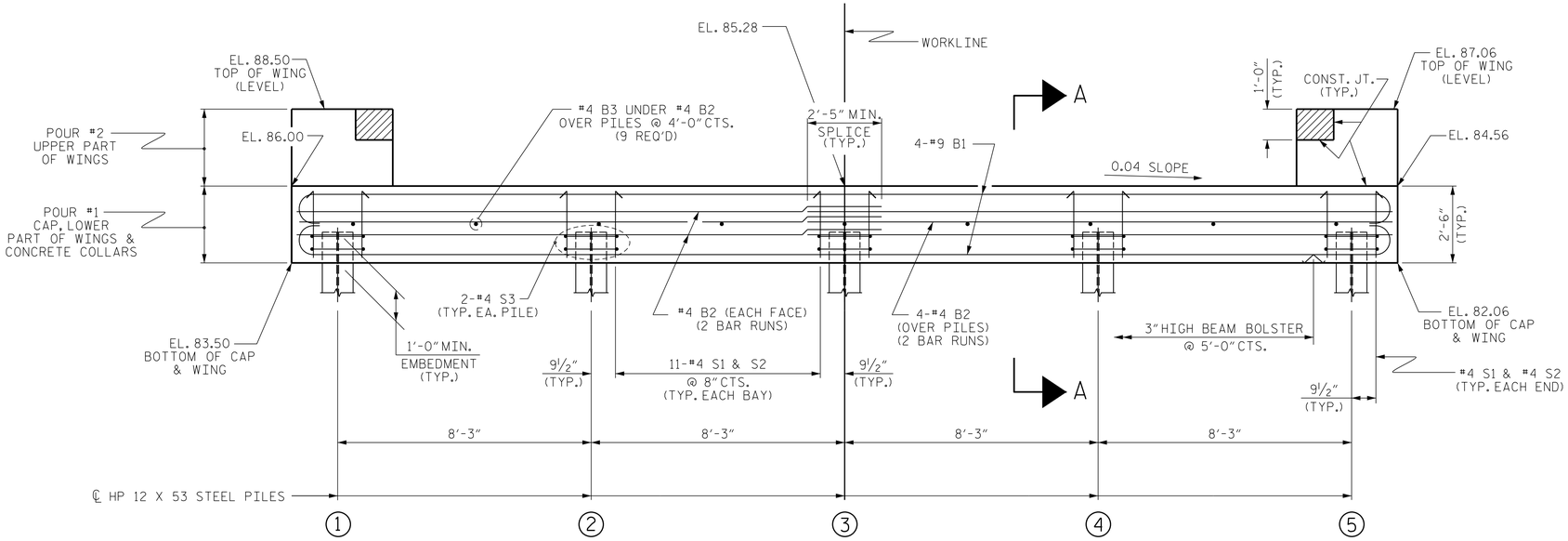

ELEVATION

WINGS NOT SHOWN FOR CLARITY.
FOR SECTION A-A, SEE SHEET 4 OF 4.
CONCRETE COLLARS FOR STEEL PILES NOT SHOWN IN PLAN AND ELEVATION VIEWS FOR CLARITY.
SEE "CORROSION PROTECTION FOR STEEL PILES DETAIL", SHEET 4 OF 4.

TOP OF PILE ELEVATIONS	
1	84.44
2	84.11
3	83.78
4	83.45
5	83.12

PROJECT NO. 17BP.1.R.80
NORTHAMPTON COUNTY
STATION: 17+30.50 -L-

SHEET 2 OF 4

ASSEMBLED BY : J. PENDERGRAFT DATE : 4-18
CHECKED BY : J. DILWORTH DATE : 5-18
DRAWN BY : DGE 01/10
CHECKED BY : MKT 01/10
REV. 4/15 MAA/TMG

DOCUMENT NOT CONSIDERED FINAL UNLESS ALL SIGNATURES COMPLETED

ENGINEER OF RECORD
8/20/2018
NORTH CAROLINA PROFESSIONAL SEAL 14091 ENGINEER BUCK CHARLES HUNT
DocuSigned by: Buck Charles Hunt
2F15C83973BA4EC...
WETHERILL ENGINEERING
1223 Jones Franklin Rd.
Raleigh, N.C. 27606
Bus: 919 851 8077
Fax: 919 851 8107
LICENSE NO. F-0377

STATE OF NORTH CAROLINA
DEPARTMENT OF TRANSPORTATION
RALEIGH

SUBSTRUCTURE

END BENT No. 2

REVISIONS						SHEET NO.
NO.	BY:	DATE:	NO.	BY:	DATE:	S-12
1			3			TOTAL SHEETS
2			4			19

STD. NO. EB_30_90S

P:\2017\17119.01_Northampton-49\Structures\DGN\NORTHAMPTON 49 EBT.dgn
8/6/2018 12:07:31 PM