DocuSign Envelope ID: B0E15EE1-16A5-4255-B3E8-BE73B41020CE

8/17/99

PAVEMENT SCHEDULE

C1	PROP. APPROX. 3″ ASPHALT CONCRETE SURFACE COURSE, TYPE S9.5B, AT AN AVERAGE RATE OF 165 LBS. PER SQ. YD. IN EACH OF TWO LAYERS.
C2	PROP. VAR. DEPTH ASPHALT CONCRETE SURFACE COURSE, TYPE S9.5B, AT AN AVERAGE RATE OF 110 LBS. PER SQ. YD. PER 1″ DEPTH. TO BE PLACED IN LAYERS NOT TO EXCEED 2″ IN DEPTH.
E1	PROP. APPROX. 5 ½″ ASPHALT CONCRETE BASE COURSE, TYPE B25.0C, AT AN AVERAGE RATE OF 627 LBS. PER SQ. YD.
E2	PROP. VAR. DEPTH ASPHALT CONCRETE BASE COURSE, TYPE B25.0C, AT AN AVERAGE RATE OF 114 LBS. PER SQ. YD. PER 1″ DEPTH. TO BE PLACED IN LAYERS NOT LESS THAN 3″ IN DEPTH OR GREATER THAN 5½″ IN DEPTH.
T	EARTH MATERIAL.
U	EXISTING PAVEMENT.
W	VARIABLE DEPTH ASPHALT PAVEMENT (SEE STANDARD WEDGING DETAIL)

NOTE: PAVEMENT EDGE SLOPES ARE 1:1 UNLESS SHOWN OTHERWISE.

PROJECT REFERENCE NO.	SHEET NO.
17BP.1.R.80	2A-1
ROADWAY DESIGN ENGINEER	PAVEMENT DESIGN ENGINEER

8/28/2018

NORTH CAROLINA PROFESSIONAL SEAL 21116 ENGINEER BOB A. MAY

Bob A. May

DOCUMENT NOT CONSIDERED FINAL UNLESS ALL SIGNATURES COMPLETED

WETHERILL ENGINEERING
1223 Jones Franklin Rd.
Raleigh, N.C. 27606
License No. F-0377
Bus: 919 851 8077
Fax: 919 851 8107
TRANSPORTATION PLANNING/DESIGN - BRIDGE/STRUCTURE DESIGN
CIVIL/SITE DESIGN - GIS/GPS - CONSTRUCTION OBSERVATION

NOTES TO CONTRACTOR

Perform the work in accordance with Section 607 of the January 2012 North Carolina Department of Transportation Standard Specifications for Roads and Structures. Resurfacing will be accomplished at the same time as the milling operation.

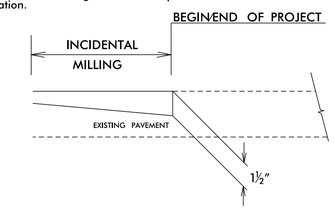

NOTE: UTILIZE INCIDENTAL MILLING TO MAKE PAVEMENT TIE-INS
-L- STA. 14+50.00 TO -L- STA. 15+80.00
-L- STA. 18+80.00 TO -L- STA. 20+00.00

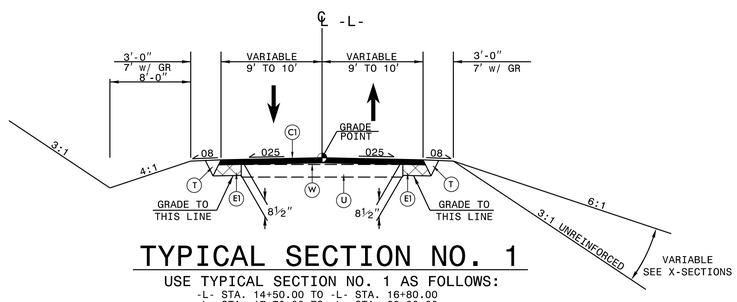

TYPICAL SECTION NO. 1

USE TYPICAL SECTION NO. 1 AS FOLLOWS:
-L- STA. 14+50.00 TO -L- STA. 16+80.00
-L- STA. 17+70.00 TO -L- STA. 20+00.00

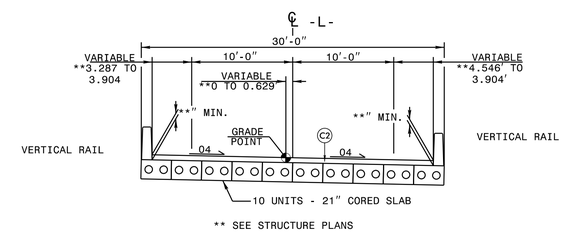

** SEE STRUCTURE PLANS

TYPICAL SECTION NO. 3

USE TYPICAL SECTION NO. 3 AS FOLLOWS:
-L- STA. 16+99.30 TO -L- STA. 17+61.70

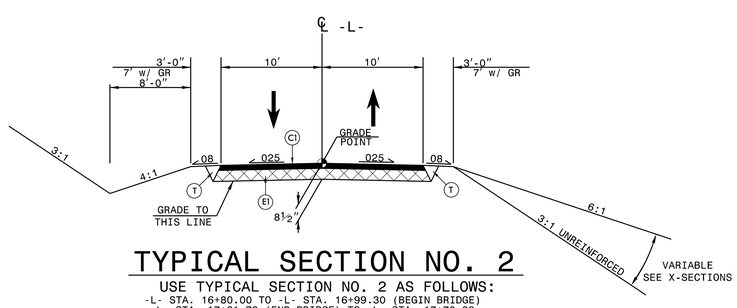

TYPICAL SECTION NO. 2

USE TYPICAL SECTION NO. 2 AS FOLLOWS:
-L- STA. 16+80.00 TO -L- STA. 16+99.30 (BEGIN BRIDGE)
-L- STA. 17+61.70 (END BRIDGE) TO -L- STA. 17+70.00

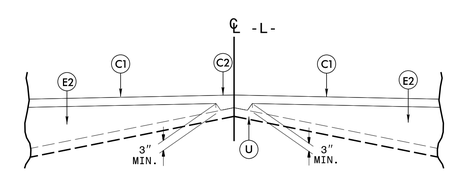

Detail Showing Method of Wedging

8/23/2018
17BP.1.R.80_Rdy_psh_02_typ.dgn
USER:SKENNEDY