WBS ELEMENT: 17BP.1.R.72

CONTRACT: DA00209

See Sheet 1-A For Index of Sheets
See Sheet 1-B For Conventional Symbols

STATE OF NORTH CAROLINA
DIVISION OF HIGHWAYS

STATE	STATE PROJECT REFERENCE NO.	SHEET NO.	TOTAL SHEETS
N.C.	17BP.1.R.72	1	

STATE PROJ. NO.	F.A. PROJ. NO.	DESCRIPTION
17BP.1.R.72		

PASQUOTANK COUNTY

LOCATION: BRIDGE NO. 14 OVER SHEPARDS DITCH CANAL ON SR 1360

TYPE OF WORK: GRADING, DRAINAGE, PAVING, AND STRUCTURES

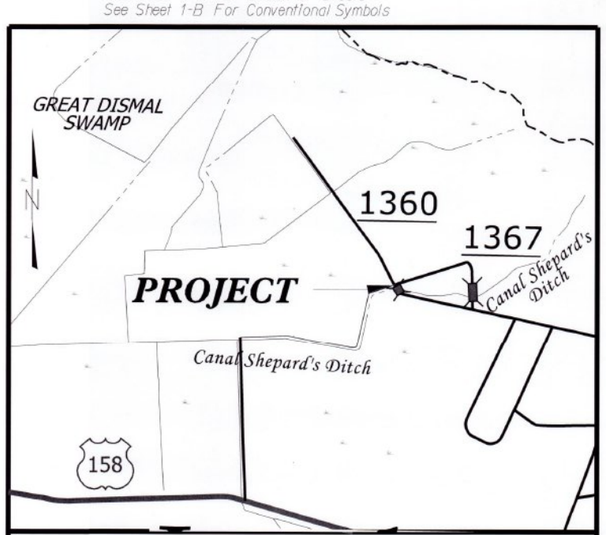

VICINITY MAP

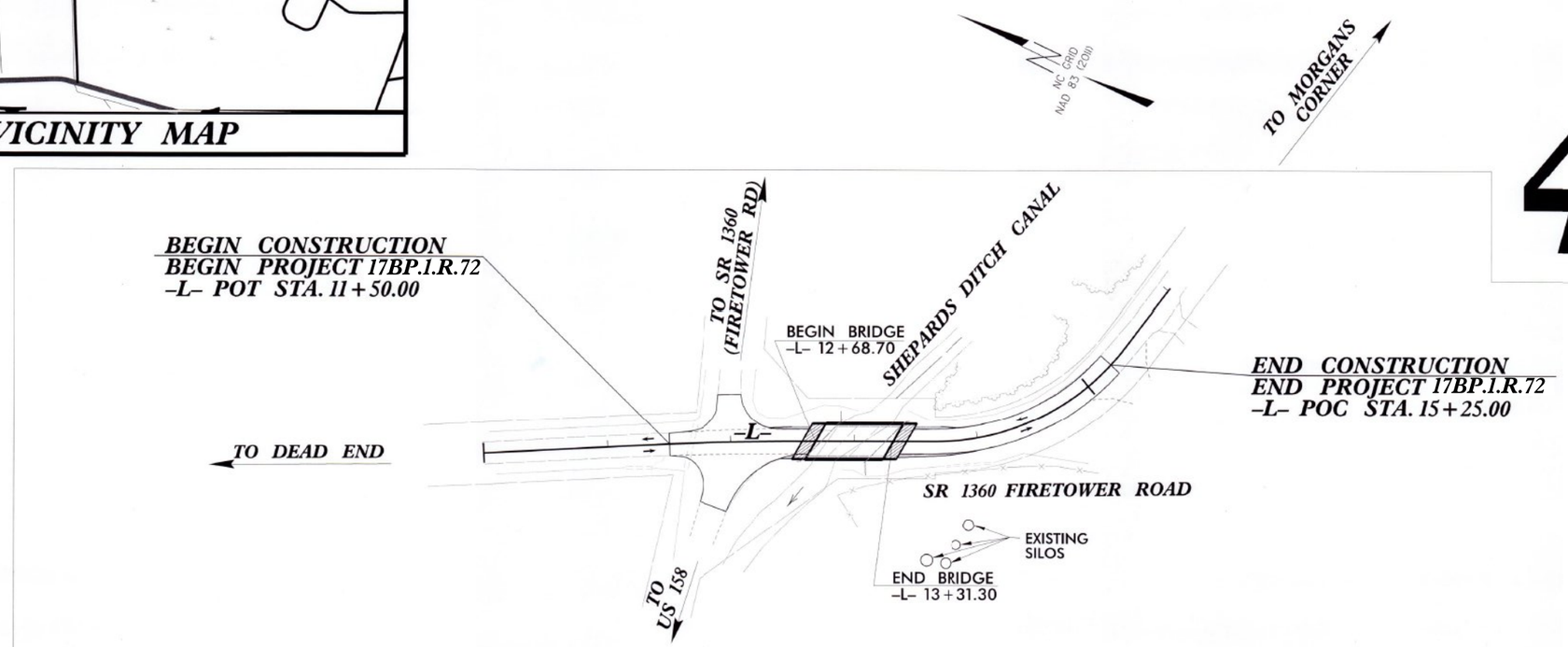

4

CLEARING ON THIS PROJECT SHALL BE PERFORMED TO THE LIMITS ESTABLISHED BY METHOD II MODIFIED. FIVE FEET BEYOND SLOPE LIMITS TO BE HAND CLEARED.

GRAPHIC SCALES

50 25 0 50 100
PLANS

50 25 0 50 100
PROFILE (HORIZONTAL)

10 5 0 10 20
PROFILE (VERTICAL)

2011 AADT = 80 vpd

PROJECT LENGTH

LENGTH ROADWAY PROJECT 17BP.1.R.72	=	0.059 MILES
LENGTH STRUCTURE PROJECT 17BP.1.R.72	=	0.012 MILES
TOTAL LENGTH PROJECT 17BP.1.R.72	=	0.071 MILES

Prepared In the Office of:
CDM Smith
5400 Glenwood Avenue, Suite 300, Raleigh, NC 27612

2012 STANDARD SPECIFICATIONS

RIGHT OF WAY DATE:
JUNE 1, 2013

LETTING DATE:

DOUGLAS B. SAUNDERS, PE
PROJECT ENGINEER

DAVID J. CLODGO, PE
PROJECT DESIGN ENGINEER

HYDRAULICS ENGINEER
NORTH CAROLINA PROFESSIONAL SEAL 19669 ENGINEER JEROME J. BEADD
SIGNATURE: Jerome J Beadd P.E. 7/9/14

ROADWAY DESIGN ENGINEER
NORTH CAROLINA PROFESSIONAL SEAL 14160 ENGINEER DOUGLAS B. SAUNDERS
SIGNATURE: Douglas B Saunders P.E. 7/8/2014

DIVISION OF HIGHWAYS
STATE OF NORTH CAROLINA
STATE OF NORTH CAROLINA DEPARTMENT OF TRANSPORTATION

7/7/2014 4:06:21 PM
::\Proj\BD-50\M_RDY_TSH_01.dgn
USER: TILMANCJ

PROJECT REFERENCE NO.	SHEET NO.
17BP.1.R.72	1-A
R/W SHEET NO.	
ROADWAY DESIGN ENGINEER	

NORTH CAROLINA PROFESSIONAL SEAL 14160 ENGINEER DOUGLAS B. FRANKLIN

7/8/14

INDEX OF SHEETS

SHEET NUMBER	TITLE
1	TITLE SHEET
1-A	INDEX OF SHEETS, GENERAL NOTES AND LIST OF STANDARDS
1-B	CONVENTIONAL SYMBOLS
2	TYPICAL SECTIONS AND PAVEMENT SCHEDULE
2-A THRU 2-B	STRUCTURE ANCHOR UNITS DETAIL
3-A	SUMMARY OF DRAINAGE QUANTITIES, SUMMARY OF GUARDRAIL, EARTHWORK SUMMARY
4	PLAN AND PROFILE SHEET
EC-1 THRU EC-3	EROSION CONTROL SHEETS
X-1	CROSS SECTION SUMMARY SHEET
X-2 THRU X-3	CROSS SECTIONS
S-1 THRU S-17	STRUCTURE PLANS

GENERAL NOTES

GENERAL NOTES: 2012 SPECIFICATIONS

EFFECTIVE: 01-17-2012
REVISED: 07-30-2012

GRADING AND SURFACING OR RESURFACING AND WIDENING:

THE GRADE LINES SHOWN DENOTE THE FINISHED ELEVATION OF THE PROPOSED SURFACING AT GRADE POINTS SHOWN ON THE TYPICAL SECTIONS. WHERE NO GRADE LINES ARE SHOWN, THE PROFILES SHOWN DENOTE THE TOP ELEVATION OF THE EXISTING PAVEMENT ALONG THE CENTER LINE OF SURVEY ON WHICH THE PROPOSED RESURFACING WILL BE PLACED. GRADE LINES MAY BE ADJUSTED BY THE ENGINEER IN ORDER TO SECURE A PROPER TIE-IN.

CLEARING:

CLEARING ON THIS PROJECT SHALL BE PERFORMED TO THE LIMITS ESTABLISHED BY METHOD II MODIFIED.

SUPERELEVATION:

ALL CURVES ON THIS PROJECT SHALL BE SUPERELEVATED IN ACCORDANCE WITH STD. NO. 225.04 AND/OR STD. NO. 225.05 USING THE RATE OF SUPERELEVATION AND RUNOFF SHOWN ON THE PLANS. SUPERELEVATION IS TO BE REVOLVED ABOUT THE GRADE POINTS SHOWN ON THE TYPICAL SECTIONS.

SHOULDER CONSTRUCTION:

ASPHALT, EARTH, AND CONCRETE SHOULDER CONSTRUCTION ON THE HIGH SIDE OF SUPERELEVATED CURVES SHALL BE IN ACCORDANCE WITH STD. NO. 560.01 AND/OR STD. NO. 560.02

SIDE ROADS:

THE CONTRACTOR WILL BE REQUIRED TO DO ALL NECESSARY WORK TO PROVIDE SUITABLE CONNECTIONS WITH ALL ROADS, STREETS, AND DRIVES ENTERING THIS PROJECT. THIS WORK WILL BE PAID FOR AT THE CONTRACT UNIT PRICE FOR THE PARTICULAR ITEMS INVOLVED.

GUARDRAIL:

THE GUARDRAIL LOCATIONS SHOWN ON THE PLANS MAY BE ADJUSTED DURING CONSTRUCTION AS DIRECTED BY THE ENGINEER. THE CONTRACTOR SHOULD CONSULT WITH THE ENGINEER PRIOR TO ORDERING GUARDRAIL MATERIAL.

SUBSURFACE PLANS:

NO SUBSURFACE PLANS ARE AVAILABLE ON THIS PROJECT. THE CONTRACTOR SHOULD MAKE HIS OWN INVESTIGATION AS TO THE SUBSURFACE CONDITIONS.

END BENTS:

THE ENGINEER SHALL CHECK THE STRUCTURE END BENT PLANS, DETAILS, AND CROSS-SECTION PRIOR TO SETTING OF THE SLOPE STAKES FOR THE EMBANKMENT OR EXCAVATION APPROACHING A BRIDGE.

RIGHT-OF-WAY MARKERS:

ALL RIGHT-OF-WAY MARKERS ON THIS PROJECT SHALL BE PLACED BY OTHERS.

STANDARD DRAWINGS

EFF. 01-17-2012
REV. 10-30-2012

EFF. 07-18-06
REV. 01-02-07

2012 ROADWAY ENGLISH STANDARD DRAWINGS

The following Roadway Standards as appear in "Roadway Standard Drawings" Highway Design Branch – N. C. Department of Transportation – Raleigh, N. C., Dated January, 2012 are applicable to this project and by reference hereby are considered a part of these plans:

STD.NO.	TITLE
DIVISION 2	EARTHWORK
200.02	Method of Clearing – Method II
225.02	Guide for Grading Subgrade – Secondary and Local
225.04	Method of Obtaining Superelevation – Two Lane Pavement
DIVISION 3	
300.01	Method of Pipe Installation
DIVISION 4	MAJOR STRUCTURES
422.10	Reinforced Bridge Approach Fills
DIVISION 5	SUBGRADE, BASES AND SHOULDERS
560.01	Method of Shoulder Construction – High Side of Superelevated Curve – Method I
DIVISION 6	ASPHALT BASES AND PAVEMENTS
654.01	Pavement Repairs
DIVISION 8	INCIDENTALS
806.01	Concrete Right-of-Way Marker
806.02	Granite Right-of-Way Marker
840.36	Traffic Bearing Grated Drop inlet – for Steel (840.37) Double Frame and Grates
840.37	Steel Grate and Frame
862.01	Guardrail Placement
862.02	Guardrail Installation
862.03	Structure Anchor Units (Beg. March 2013 Letting use detail in lieu of Standard)
876.02	Guide for Rip Rap at Pipe Outlets
DIVISION 11	WORK ZONE TRAFFIC CONTROL
1101.01	Work Zone Advance Warning Signs
1101.02	Temporary Lane Closures
1101.03	Temporary Road Closures
1101.11	Traffic Control Design Tables
1110.01	Stationary Work Zone Signs
1130.01	Drum
1135.01	Cones
1145.01	Barricades
1150.01	Flagging Devices

5/14/99
7/7/2014 10:34:03 AM
USER: FHWA
Pw:...\DOT10.RDY.PSH.01A.dgn

PROJECT REFERENCE NO.	SHEET NO.
17BP.1.R.72	1-B

Note: Not to Scale

**S.U.E. = Subsurface Utility Engineering*

STATE OF NORTH CAROLINA
DIVISION OF HIGHWAYS

CONVENTIONAL PLAN SHEET SYMBOLS

BOUNDARIES AND PROPERTY:

- State Line
- County Line
- Township Line
- City Line
- Reservation Line
- Property Line
- Existing Iron Pin — EIP
- Property Corner
- Property Monument — ECM
- Parcel/Sequence Number — 123
- Existing Fence Line
- Proposed Woven Wire Fence
- Proposed Chain Link Fence
- Proposed Barbed Wire Fence
- Existing Wetland Boundary — WLB
- Proposed Wetland Boundary — WLB
- Existing Endangered Animal Boundary — EAB
- Existing Endangered Plant Boundary — EPB
- Known Soil Contamination: Area or Site
- Potential Soil Contamination: Area or Site

BUILDINGS AND OTHER CULTURE:

- Gas Pump Vent or U/G Tank Cap
- Sign — S
- Well — W
- Small Mine
- Foundation
- Area Outline
- Cemetery
- Building
- School
- Church
- Dam

HYDROLOGY:

- Stream or Body of Water
- Hydro, Pool or Reservoir
- Jurisdictional Stream — JS
- Buffer Zone 1 — BZ 1
- Buffer Zone 2 — BZ 2
- Flow Arrow
- Disappearing Stream
- Spring
- Wetland
- Proposed Lateral, Tail, Head Ditch — FLOW
- False Sump

RAILROADS:

- Standard Gauge — CSX TRANSPORTATION
- RR Signal Milepost — MILEPOST 35
- Switch — SWITCH
- RR Abandoned
- RR Dismantled

RIGHT OF WAY:

- Baseline Control Point
- Existing Right of Way Marker
- Existing Right of Way Line
- Proposed Right of Way Line — RW
- Proposed Right of Way Line with Iron Pin and Cap Marker — RW
- Proposed Right of Way Line with Concrete or Granite R/W Marker — RW
- Proposed Control of Access Line with Concrete C/A Marker — CA
- Existing Control of Access — CA
- Proposed Control of Access — CA
- Existing Easement Line — E
- Proposed Temporary Construction Easement — E
- Proposed Temporary Drainage Easement — TDE
- Proposed Permanent Drainage Easement — PDE
- Proposed Permanent Drainage / Utility Easement — DUE
- Proposed Permanent Utility Easement — PUE
- Proposed Temporary Utility Easement — TUE
- Proposed Aerial Utility Easement — AUE
- Proposed Permanent Easement with Iron Pin and Cap Marker

ROADS AND RELATED FEATURES:

- Existing Edge of Pavement
- Existing Curb
- Proposed Slope Stakes Cut — C
- Proposed Slope Stakes Fill — F
- Proposed Curb Ramp — CR
- Existing Metal Guardrail
- Proposed Guardrail
- Existing Cable Guiderail
- Proposed Cable Guiderail
- Equality Symbol
- Pavement Removal

VEGETATION:

- Single Tree
- Single Shrub
- Hedge
- Woods Line
- Orchard
- Vineyard — Vineyard

EXISTING STRUCTURES:

MAJOR:

- Bridge, Tunnel or Box Culvert — CONC
- Bridge Wing Wall, Head Wall and End Wall — CONC WW

MINOR:

- Head and End Wall — CONC HW
- Pipe Culvert
- Footbridge
- Drainage Box: Catch Basin, DI or JB — CB
- Paved Ditch Gutter
- Storm Sewer Manhole — S
- Storm Sewer — S

UTILITIES:

POWER:

- Existing Power Pole
- Proposed Power Pole
- Existing Joint Use Pole
- Proposed Joint Use Pole
- Power Manhole — P
- Power Line Tower
- Power Transformer
- U/G Power Cable Hand Hole
- H-Frame Pole
- Recorded U/G Power Line — P
- Designated U/G Power Line (S.U.E.*) — P

TELEPHONE:

- Existing Telephone Pole
- Proposed Telephone Pole
- Telephone Manhole — T
- Telephone Booth
- Telephone Pedestal — T
- Telephone Cell Tower
- U/G Telephone Cable Hand Hole — HH
- Recorded U/G Telephone Cable — T
- Designated U/G Telephone Cable (S.U.E.*) — T
- Recorded U/G Telephone Conduit — TC
- Designated U/G Telephone Conduit (S.U.E.*) — TC
- Recorded U/G Fiber Optics Cable — T FO
- Designated U/G Fiber Optics Cable (S.U.E.*) — T FO

WATER:

- Water Manhole — W
- Water Meter
- Water Valve
- Water Hydrant
- Recorded U/G Water Line — W
- Designated U/G Water Line (S.U.E.*) — W
- Above Ground Water Line — A/G Water

TV:

- TV Satellite Dish
- TV Pedestal — C
- TV Tower
- U/G TV Cable Hand Hole — HH
- Recorded U/G TV Cable — TV
- Designated U/G TV Cable (S.U.E.*) — TV
- Recorded U/G Fiber Optic Cable — TV FO
- Designated U/G Fiber Optic Cable (S.U.E.*) — TV FO

GAS:

- Gas Valve
- Gas Meter
- Recorded U/G Gas Line — G
- Designated U/G Gas Line (S.U.E.*) — G
- Above Ground Gas Line — A/G Gas

SANITARY SEWER:

- Sanitary Sewer Manhole
- Sanitary Sewer Cleanout
- U/G Sanitary Sewer Line — SS
- Above Ground Sanitary Sewer — A/G Sanitary Sewer
- Recorded SS Forced Main Line — FSS
- Designated SS Forced Main Line (S.U.E.*) — FSS

MISCELLANEOUS:

- Utility Pole
- Utility Pole with Base
- Utility Located Object
- Utility Traffic Signal Box — S
- Utility Unknown U/G Line — ?UTL
- U/G Tank; Water, Gas, Oil
- Underground Storage Tank, Approx. Loc. — UST
- A/G Tank; Water, Gas, Oil
- Geoenvironmental Boring
- U/G Test Hole (S.U.E.*)
- Abandoned According to Utility Records — AATUR
- End of Information — E.O.I.

12/05/11
6/18/2014 5:01:32 PM
USER: LILLMANCI

PROJECT REFERENCE NO.	SHEET NO.
17BP.1.R.72	2
ROADWAY DESIGN ENGINEER	PAVEMENT DESIGN ENGINEER

NORTH CAROLINA PROFESSIONAL SEAL 14160 ENGINEER DOUGLAS B. SAUNDERS

Doug Saunders 7/8/14

CDM Smith — Camp Dresser & McKee, 1000 Westgate Avenue, Suite 500, Raleigh, NC 27612-3228, NC COA No. F-0412

NC DEPARTMENT OF TRANSPORTATION, PAVEMENT MANAGEMENT UNIT, 1593 MAIL SERVICE CENTER, RALEIGH, NC 27699-1593

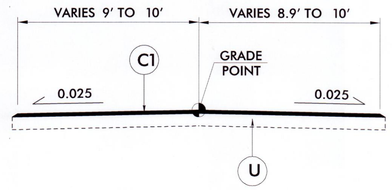

TYPICAL SECTION NO. 1

USE TYPICAL SECTION NO. 1

–L– Sta. 11+50.00 TO Sta. 12+00.00
–L– Sta. 15+00.00 TO Sta. 15+25.00

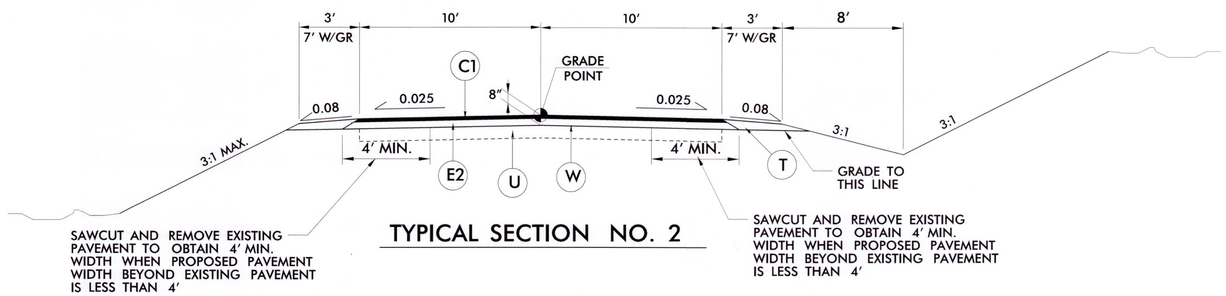

TYPICAL SECTION NO. 2

USE TYPICAL SECTION NO. 2

–L– Sta. 12+00.00 TO Sta. 12+50.00
–L– Sta. 14+25.00 TO Sta. 15+00.00

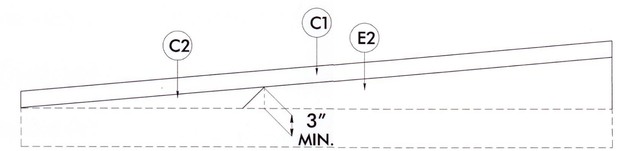

WEDGING DETAIL FOR RESURFACING

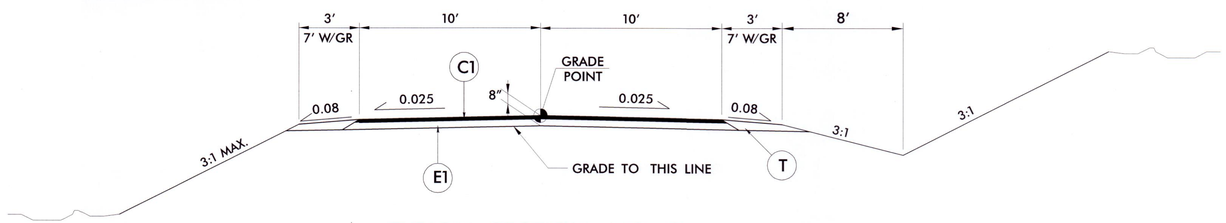

TYPICAL SECTION NO. 3

USE TYPICAL SECTION NO. 3

–L– Sta. 12+50.00 TO Sta. 12+68.70 (BEG. BRIDGE)
–L– Sta. 13+31.30 (END BRIDGE) TO Sta. 14+25.00

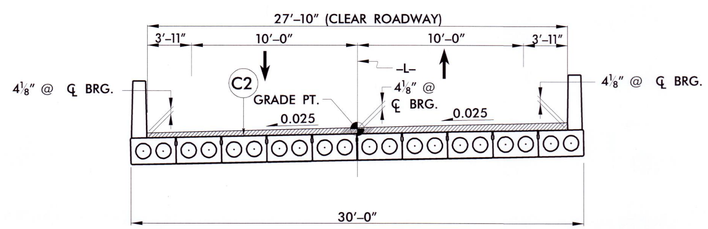

TYPICAL SECTION ON STRUCTURE

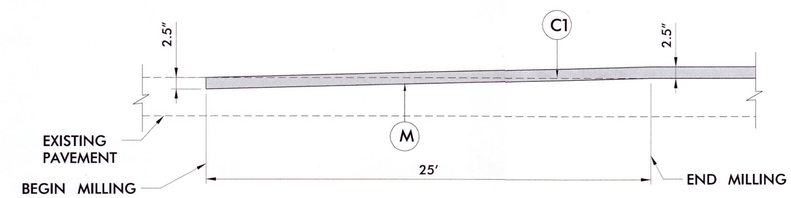

MILLING DETAIL (VIEW ALONG ROAD ℄)

NOT TO SCALE

NOTE: END MILLING WHERE PROPOSED GRADE IS 2.5″ ABOVE EXISTING PAVEMENT

PAVEMENT SCHEDULE

ITEM	DESCRIPTION	ITEM	DESCRIPTION	ITEM	DESCRIPTION
C1	PROPOSED APPROXIMATE 2.5 IN. ASPHALT SURFACE COURSE, TYPE SF9.5A, AT AN AVERAGE RATE OF 137.50 LBS/SY. IN EACH OF TWO LAYERS	M	MILLING (SEE MILLING DETAIL ABOVE)		
C2	PROP. VAR. DEPTH ASPHALT CONC. SURFACE COURSE, TYPE SF9.5A, AT AN AVERAGE RATE OF 110 LBS/SY/IN. IN LIFTS NOT LESS THAN 1.0 IN. NOR GREATER THAN 1.5 IN.	U	EXISTING PAVEMENT		
E1	PROP. APPROX. 5.5 IN. ASPHALT BASE COURSE, TYPE B25.0B, AT AN AVERAGE RATE OF 627 LBS/SY.	W	WEDGING (SEE WEDGE DETAIL ABOVE)		
E2	PROP. VAR. DEPTH ASPHALT BASE COURSE, TYPE B25.0B, AT AN AVERAGE RATE OF 114 LBS/SY/IN IN LIFTS NOT LESS THAN 3 IN. NOR GREATER THAN 5.5 IN.				
T	EARTH MATERIAL				

NOTES :

PAVEMENT EDGES ARE 1:1 UNLESS OTHERWISE NOTED.

6/2/99
6/20/2014 9:35:15 AM
File: ...\Proj\BD-5101M_RDy_TYP_02.dgn

6/18/2014 5:03:05 PM
...\Proj\BD-2181M_RDY_PSH_2A-B.dgn
USER: TILLMANCJ

STATE OF NORTH CAROLINA
DEPT. OF TRANSPORTATION
DIVISION OF HIGHWAYS
RALEIGH, N.C.

ENGLISH DETAIL DRAWING FOR
STRUCTURE ANCHOR UNITS
GUARDRAIL ANCHOR UNIT, TYPE III FOR ATTACHMENT TO RAIL ON BRIDGE - SUB REGIONAL TIER

SHEET 2 OF 7
862d03

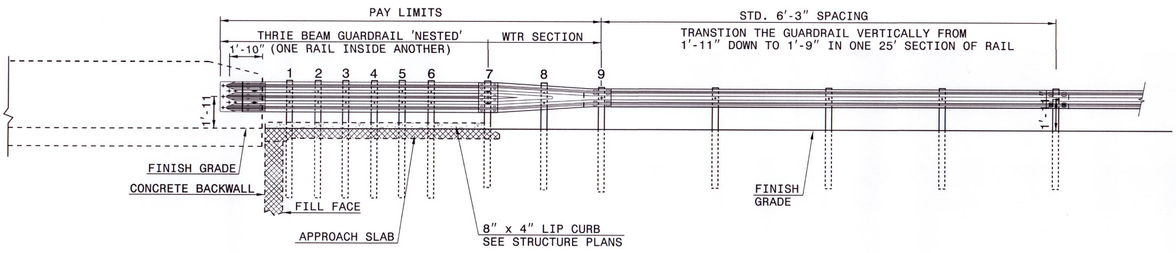

ELEVATION

NOTE:
**POST NOT REQUIRED FOR SKEW ANGLES GREATER THAN 150° OR LESS THAN 30° UNLESS OTHERWISE DIRECTED BY THE ENGINEER.
*THE DISTANCE FROM END OF BRIDGE RAIL TO CENTER LINE OF THE FIRST POST SHOULD BE 11½" IF CONCRETE BACKWALL IS NOT PRESENT.
-SHOULDER BERM GUTTER MUST BE INSTALLED TO THE LIMITS 8" x 4" LIP CURB IS SHOWN IF ANCHOR UNIT IS NOT ADJACENT TO AN APPROACH SLAB.
-MEASURE GUARDRAIL HEIGHT FROM THE TOP OF ADJACENT SURFACE (SHOULDER, BERM, OR GUTTER).
-LAP JOINTS IN THE DIRECTION OF TRAFFIC FLOW.
-SEE SHEET 5 FOR POST SECTIONS 1 THRU 9.

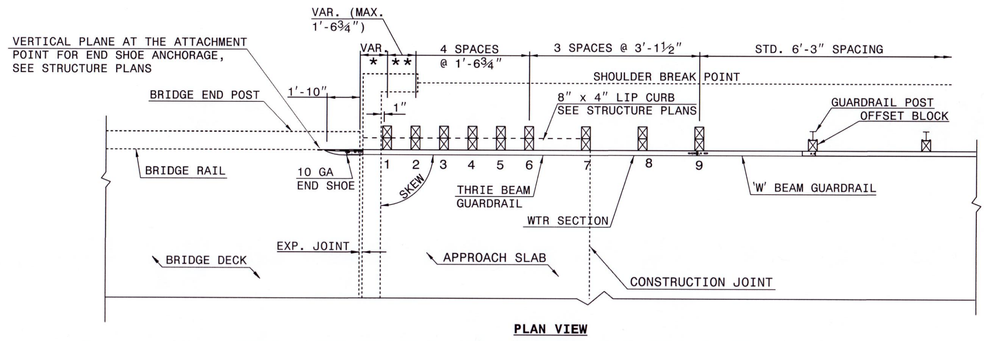

PLAN VIEW

GUARDRAIL ANCHOR UNIT, TYPE III FOR ATTACHMENT TO RAIL ON BRIDGE - SUB REGIONAL TIER

STATE OF NORTH CAROLINA
DEPT. OF TRANSPORTATION
DIVISION OF HIGHWAYS
RALEIGH, N.C.

ENGLISH DETAIL DRAWING FOR
STRUCTURE ANCHOR UNITS
GUARDRAIL ANCHOR UNIT, TYPE III FOR ATTACHMENT TO RAIL ON BRIDGE - SUB REGIONAL TIER

SHEET 2 OF 7
862d03

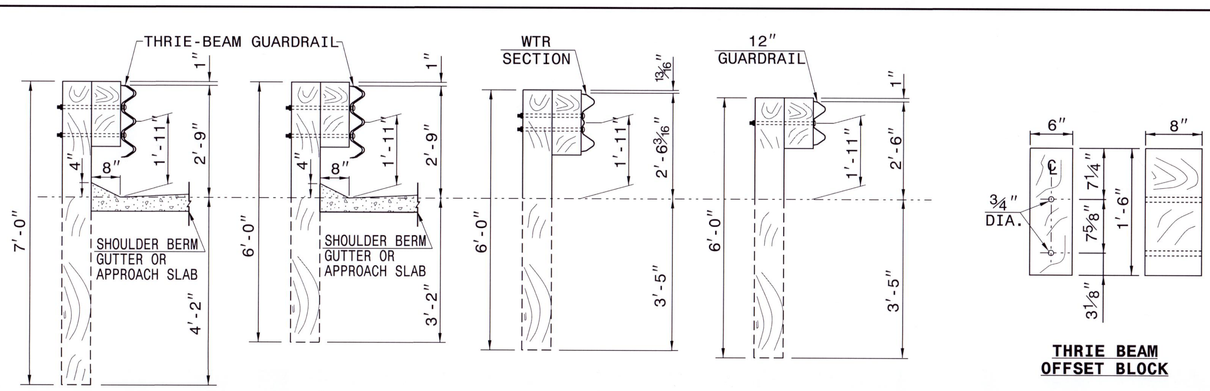

SECTION OF THRIE BEAM POSTS 1 THRU 6

SECTION OF THRIE BEAM POST 7

SECTION OF WTR BEAM POST 8

SECTION OF 'W' BEAM POST 9

THRIE BEAM OFFSET BLOCK

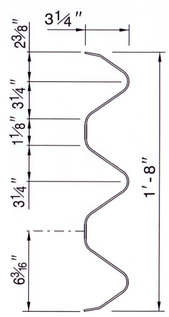

THRIE-BEAM SECTION

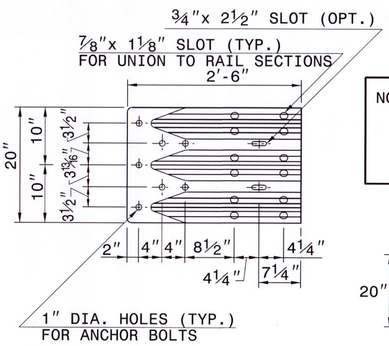

END SHOE

NOTE: THE MID POST AND OFFSET BLOCK OF THE WTR SECTION WILL REQUIRE SPECIAL BOLT HOLE DRILLING IN THE THRIE BEAM OFFSET BLOCK AND LINE POST.

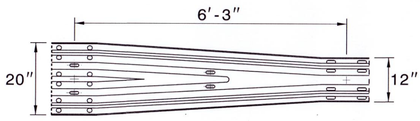

WTR SECTION
ELEVATION VIEW

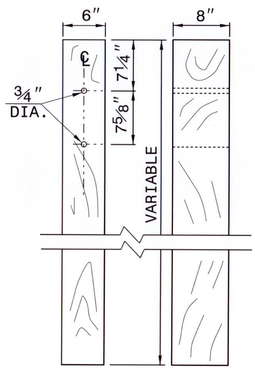

THRIE BEAM LINE POST

STATE OF NORTH CAROLINA
DEPT. OF TRANSPORTATION
DIVISION OF HIGHWAYS
RALEIGH, N.C.

ENGLISH DETAIL DRAWING FOR
STRUCTURE ANCHOR UNITS
GUARDRAIL ANCHOR UNIT, TYPE III

SHEET 3 OF 7
862d03

CONTRACT STANDARDS AND DEVELOPMENT UNIT
Office 919-707-6950 FAX 919-250-4119

SEE TITLE BLOCK

ORIGINAL BY: J. HOWERTON DATE: 06-22-12
MODIFIED BY: DATE:
CHECKED BY: DATE:
FILE SPEC.:

PROJECT REFERENCE NO. 17BP.1.R.72
SHEET NO. 2-A

PROJECT REFERENCE NO.	SHEET NO.
17BP.1.R.72	2-B

CONTRACT STANDARDS AND DEVELOPMENT UNIT
Office 919-707-6950 FAX 919-250-4119

SEE TITLE BLOCK

ORIGINAL BY: J. HOWERTON DATE: 06-22-12
MODIFIED BY: DATE:
CHECKED BY: DATE:
FILE SPEC.:

STATE OF NORTH CAROLINA
DEPT. OF TRANSPORTATION
DIVISION OF HIGHWAYS
RALEIGH, N.C.

ENGLISH DETAIL DRAWING FOR
GUARDRAIL ANCHOR UNIT
GUARDRAIL ANCHOR UNIT TYPE B-77
FOR F-SHAPE BARRIER

SHEET 4 OF 7
862D03

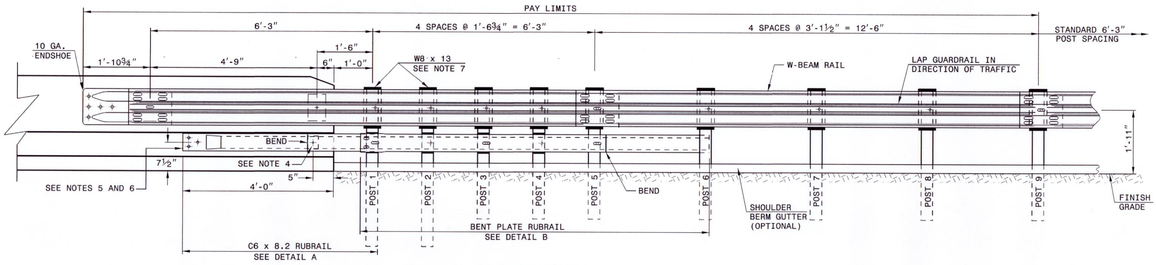

ELEVATION

GENERAL NOTES:
1) POSTS 1 THROUGH 5 REQUIRE AN ADDITIONAL HOLE TO ATTACH LOWER BLOCKOUTS AND/OR RUBRAIL.
2) RUBRAIL BLOCKOUTS LOCATED ON POSTS 1 THROUGH 4 ARE OFFSET DRILLED AND SECURED WITH ⅝" BUTTONHEAD BOLTS (SEE CHART FOR BOLT LENGTHS). SECURE BLOCKS ONLY TO POSTS 2 AND 4. SECURE RUBRAIL AND BLOCKOUTS TO POSTS 1 AND 3. RUBRAIL IS SECURED TO POST 5 WITH A ⅝" x 4½" BUTTONHEAD BOLT. RUBRAIL IS FLARED TO BACK OF POST 6 AND NOT SECURED.
3) STEEL SPACER TUBE IS A SCHEDULE 40 GALVANIZED PIPE 6" INSIDE DIAMETER x 9" LONG. ATTACH TUBE TO GUARDRAIL ONLY WITH ⅝" x 1¼" LONG BUTTONHEAD BOLT AND RECTANGULAR PLATE WASHER.
4) SEE DETAIL D FOR SLOPED RUBRAIL BLOCKOUT. BLOCKOUT IS ATTACHED TO RAIL ELEMENT ONLY. USE ⅜" x 3" LAG BOLT WITH FLAT WASHER.
5) SHOP FABRICATE THE C6 x 8.2 RUBRAIL END TO BE CONSISTENT WITH THE SLOPE OF THE F SHAPE AND ATTACH FLUSH WITH THE SLOPED TOE OF THE BARRIER OR BRIDGE RAIL.
6) ANCHORAGE:
   (a) AT EXISTING BRIDGE RAIL AND NEW OR EXISTING BARRIERS, ANCHOR RUBRAIL USING THREE ⅝" x 6" CHEMICALLY ANCHORED BOLTS WITH WASHERS. MAXIMUM PROJECTION FOR BOLTS IS ½".
   (b) AT EXISTING BRIDGE RAIL AND NEW OR EXISTING BARRIERS, ANCHOR THE W-BEAM END SHOE USING A 4 BOLT HOLD DOWN PLATE (SEE STD. DWG. 862.04). A 4 BOLT INSERT ASSEMBLY IS ALLOWED ON PRECAST REINFORCED CONCRETE BARRIER (SEE STD. DWG. 857.01). INSTALL THE W-BEAM END SHOE BEHIND THE NESTED W-BEAM ELEMENTS.
   (c) AT NEW BRIDGE RAIL, ANCHOR THE W-BEAM END SHOE AND RUBRAIL AS DETAILED ON THE STRUCTURE PLANS.
7) POSTS 1 AND 2 ARE W8 x 13, 7'-6" LONG. ALL OTHER POSTS IN THE ANCHOR UNIT ARE W6 x 8.5.

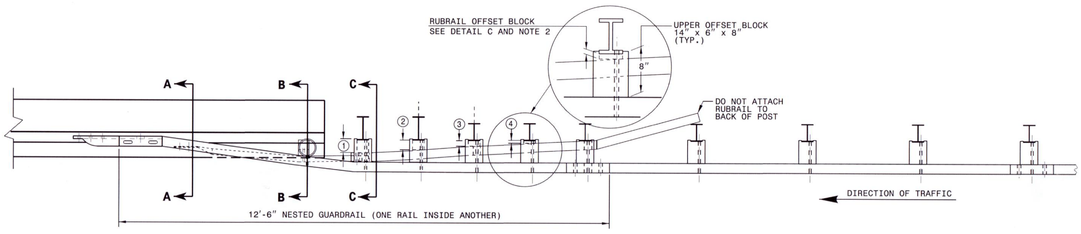

PLAN

GUARDRAIL ANCHOR UNIT TYPE B-77

STATE OF NORTH CAROLINA
DEPT. OF TRANSPORTATION
DIVISION OF HIGHWAYS
RALEIGH, N.C.

ENGLISH DETAIL DRAWING FOR
STRUCTURE ANCHOR UNIT
GUARDRAIL ANCHOR UNIT TYPE B-77
FOR F-SHAPE BARRIER

SHEET 4 OF 7
862D03

STATE OF NORTH CAROLINA
DEPT. OF TRANSPORTATION
DIVISION OF HIGHWAYS
RALEIGH, N.C.

ENGLISH DETAIL DRAWING FOR
GUARDRAIL ANCHOR UNIT
GUARDRAIL ANCHOR UNIT TYPE B-77
FOR F-SHAPE BARRIER

SHEET 5 OF 7
862D03

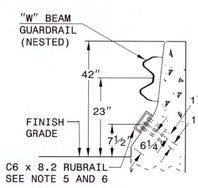

SECTION A-A

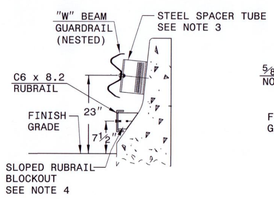

SECTION B-B

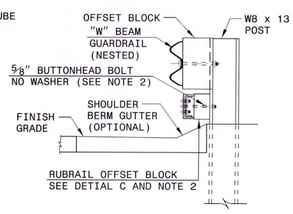

SECTION C-C

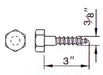

DETAIL E
LAG BOLT

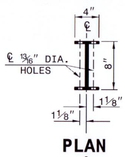

PLAN

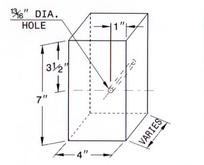

RUBRAIL BLOCKS 7" HIGH x 4" WIDE		
POST	THICKNESS	BOLT LENGTH
1	4¼"	9"
2	3¼"	5" *
3	2"	6"
4	1"	3" *

* BOLTS FOR POSTS 2 AND 4 ARE USED TO ATTACH BLOCK TO POST. RUBRAIL NOT ATTACHED TO BLOCK.

DETAIL C
RUBRAIL BLOCKOUT

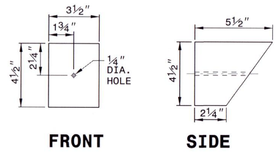

FRONT SIDE

DETAIL D
SLOPED RUBRAIL BLOCKOUT

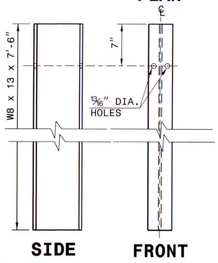

SIDE FRONT

DETAIL F STEEL POST
"W8 X 13 X 7'-6"

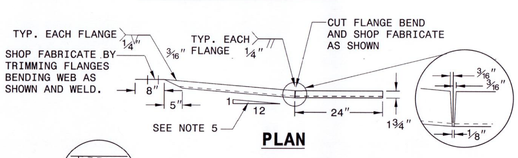

PLAN

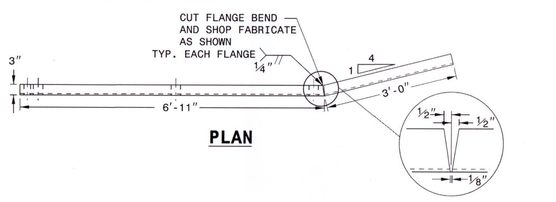

PLAN

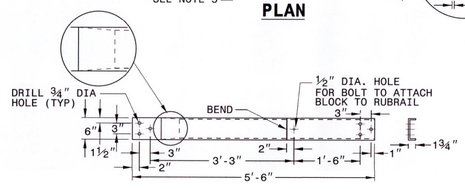

ELEVATION
DETAIL A
C6 x 8.2 RUBRAIL

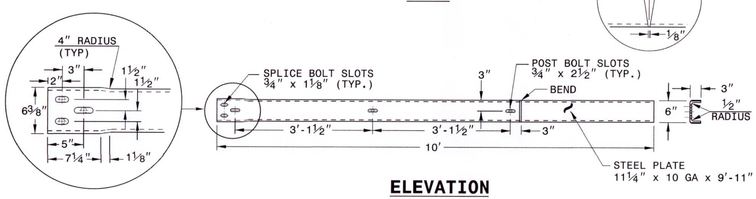

ELEVATION
DETAIL B
BENT PLATE RUBRAIL

GUARDRAIL ANCHOR UNIT TYPE B-77

SHEET 5 OF 7
862D03

6/18/2014 5:04:20 PM
U:\PW_CAD\80-510TM_HOY_PSH_24-B.dgn
USER: TILLMANCL

COMPUTED BY: C. TILLMAN	DATE: 6-2-2014
CHECKED BY: D. CLODGO	DATE: 6-19-2014

PROJECT REFERENCE NO.	SHEET NO.
17BP.1.R.72	3-A

STATE OF NORTH CAROLINA
DIVISION OF HIGHWAYS

LIST OF PIPES, ENDWALLS, ETC. (FOR PIPES 48" & UNDER)

| STATION | LOCATION (LT, RT, OR CL) | STRUCTURE NO. FROM | STRUCTURE NO. TO | TOP ELEVATION | INVERT ELEVATION | INVERT ELEVATION | SLOPE CRITICAL | SIDE DRAIN PIPE (RCP, CSP, CAAP, HDPE, or PVC) 12" | 15" | 18" | 24" | 30" | 36" | 42" | 48" | DO NOT USE RCP | DO NOT USE CSP | DO NOT USE CAAP | DO NOT USE HDPE | C.S. PIPE 12" | 15" | 18" | 24" | 30" | 36" | 42" | 48" | R.C. PIPE CLASS III 12" | 15" | 18" | 24" | 30" | 36" | 42" | 48" | R.C. PIPE CLASS IV 12" | 15" | 18" | 24" | 30" | 36" | 42" | 48" | 48" WELDED STEEL (0.625" THICK) TRENCHLESS INSTALLATION | 36" WELDED STEEL (0.625" THICK) TRENCHLESS INSTALLATION | **** RC PIPE CULVERTS, CONTRACTOR DESIGN | 15" SIDE DRAIN PIPE | 18" SIDE DRAIN PIPE | ENDWALLS STD. 838.01 OR STD. 838.11 (UNLESS NOTED OTHERWISE) CU. YARDS R.C.P. | C.S.P. | QUANTITIES FOR PAVEMENT REPAIR STRUCTURES *TOTAL L.F. FOR PAY QUANTITY SHALL BE COL. "A" + (1.3 X COL. "B") PER EACH (0' THRU 5.0') | LIN. FT. A 5.0' THRU 10.0' | LIN. FT. B 10.0' AND ABOVE | C.B. STD. 840.01 OR STD. 840.02 | FRAME, GRATES, AND HOOD STANDARD 840.03 TYPE OF GRATE E | F | G | CONCRETE TRANSITIONAL SECTION DROP INLET | CATCH BASIN | D.I. STD. 840.14 OR STD. 840.15 | D.I. FRAME AND GRATE STD. 840.16 | G.D.I. TYPE "A" STD. 840.17 OR 840.26 | G.D.I. TYPE "B" STD. 840.18 OR 840.27 | G.D.I. TYPE "D" STD. 840.19 OR 840.28 | G.D.I. FRAME WITH TWO GRATES STD. 840.20 | G.D.I. FRAME WITH TWO GRATES STD. 840.22 | G.D.I. (N.S.) FRAME WITH GRATE STD. 840.24 | G.D.I. (N.S.) FRAME WITH TWO GRATES STD. 840.24 | J.B. STD. 840.31 OR 840.32 | T.B.J.D. STD. 840.34 | T.B.J.D. STD. 840.46 | M.H. FRAME AND COVER STD. 840.54 | PARALLEL PIPE END SECTION STD. 310.02 | OPEN THROAT CATCH BASIN STD. 840.04 OR 840.05 | SPING BOX STD. 540.41 | DRY DETENTION OUTLET CONTROL STR. SHEETS 2-BC AND 2-BE | T.B.G.D.I. STD. 840.36 | T.B.D.I. FRAME WITH TWO GRATES STD. 840.37 | ADJUST CB | ADJUST C.B/M.H. | CONVERT TO C.B. | SIDE DRAIN PIPE ELBOWS NO. & SIZE | CONC. & BRICK PIPE PLUG, C.Y. STD. 840.71 | CONC. COLLARS CL. "B" C.Y. STD. 840.72 | PIPE REMOVAL LIN. FT. | REMARKS |
|---|---|---

PROJECT REFERENCE NO.	SHEET NO.
17BP.1.R.72	4
R/W SHEET NO.	

ROADWAY DESIGN ENGINEER

NORTH CAROLINA PROFESSIONAL SEAL 14160 ENGINEER DOUGLAS W. SAUNDERS

Douglas W. Saunders 2/8/19

CDM Smith — Camp Dresser & McKee, 5400 Glenwood Avenue, Suite 300, Raleigh, NC 27612-3228, NC CDA No. F-0412

HYDRAULICS ENGINEER

NORTH CAROLINA PROFESSIONAL SEAL 19869 ENGINEER JEROME C. PEARCE

MI Engineering, PLLC, 1011 Schaub Drive, Suite 100, Raleigh, NC 27606, NC CDA No.

RIGHT OF WAY AREA DATA

PARCEL NUMBER	PROPERTY OWNERS NAMES	TOTAL AREA	AREA TAKEN	AREA REMAINING	CONST. EASEMENT	PERMENANT DRAINAGE EASEMENT	TEMPORARY DRAINAGE EASEMENT
1	RICHARD D. KEY	0.944 Ac.	0.00 SF	0.944 Ac.			
2	KEVEIN B. WEEKS	1.134 Ac.	3,223.95 SF	1.060 Ac.			
3	KEVIN & ROBIN WEEKS	40.685 Ac.	3,653.94 SF.	40.601 Ac.			

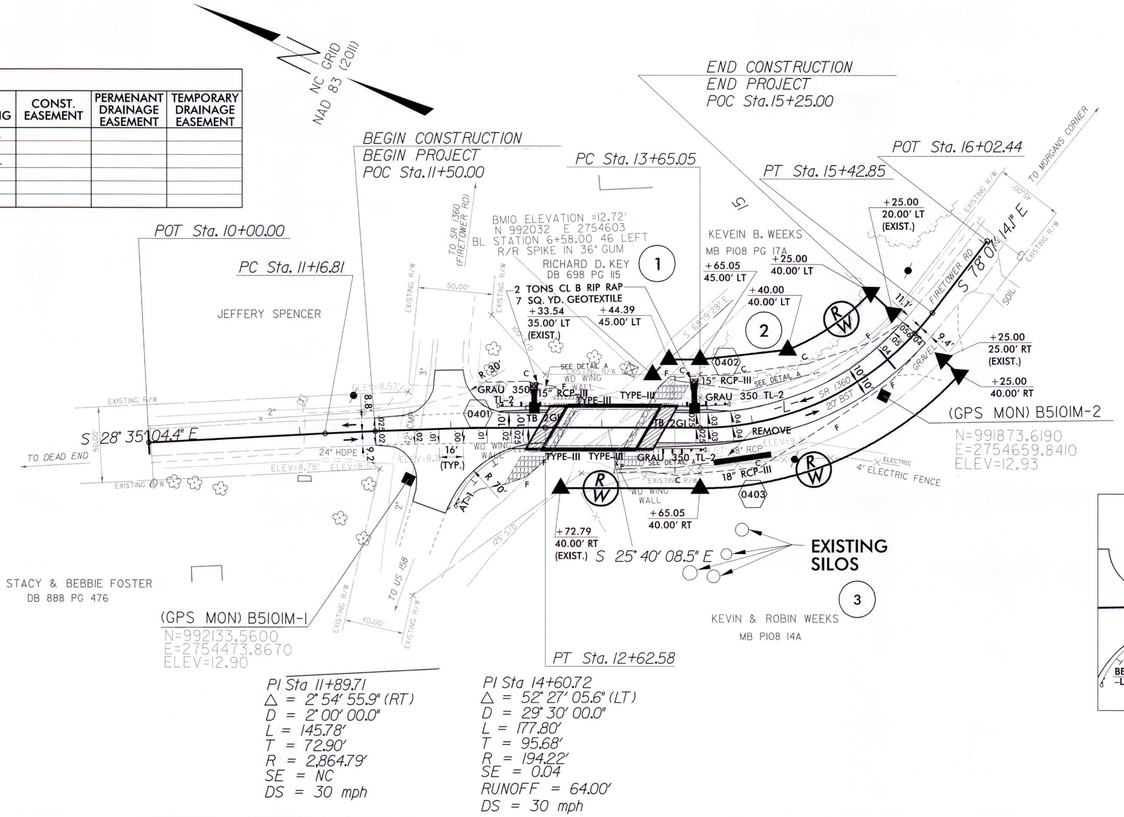

PI Sta 11+89.71
Δ = 2° 54' 55.9" (RT)
D = 2° 00' 00.0"
L = 145.78'
T = 72.90'
R = 2,864.79'
SE = NC
DS = 30 mph

PI Sta 14+60.72
Δ = 52° 27' 05.6" (LT)
D = 29° 30' 00.0"
L = 177.80'
T = 95.68'
R = 194.22'
SE = 0.04
RUNOFF = 64.00'
DS = 30 mph

DATUM DESCRIPTION

THE LOCALIZED COORDINATE SYSTEM DEVELOPED FOR THIS PROJECT IS BASED ON THE STATE PLANE COORDINATES ESTABLISHED BY NCDOT FOR MONUMENT "BD5101M-1"
WITH NAD 83 (2011) STATE PLANE GRID COORDINATES OF
NORTHING: 992133.5600(ft) EASTING: 2754473.8670(ft)
ELEVATION: 12.90(ft)
THE AVERAGE COMBINED GRID FACTOR USED ON THIS PROJECT (GROUND TO GRID) IS: 1.000096199
THE N.C. LAMBERT GRID BEARING AND LOCALIZED HORIZONTAL GROUND DISTANCE FROM "BD5101M-1" TO -L- STATION IS

ALL LINEAR DIMENSIONS ARE LOCALIZED HORIZONTAL DISTANCES
VERTICAL DATUM USED IS NAVD 88

DETAIL A

STANDARD 'V' DITCH
(Not to Scale)

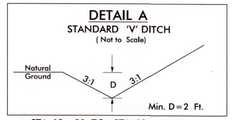

STA. 12+50 TO STA. 12+70 LT.
STA. 13+45 TO STA. 14+45 LT.
STA. 13+05 TO STA. 13+75 RT. (USE 2:1 SLOPES)

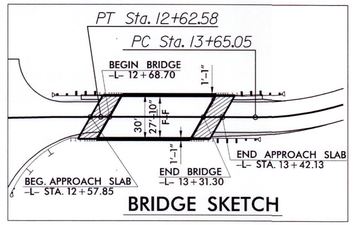

BRIDGE SKETCH

BRIDGE HYDRAULIC DATA

DESIGN DISCHARGE	= 220	CFS
DESIGN FREQUENCY	= 25	YRS
DESIGN HW ELEVATION	= 13.0	FT
BASE DISCHARGE	= 350	CFS
BASE FREQUENCY	= 100	YRS
BASE HW ELEVATION	= 13.21	FT
OVERTOPPING DISCHARGE	= 300	CFS
OVERTOPPING FREQUENCY	= 50+	YRS
OVERTOPPING ELEVATION	= 13.1	FT
DATE OF SURVEY	= MAY 2013	
W.S. ELEVATION AT DATE OF SURVEY	= 7.5	FT

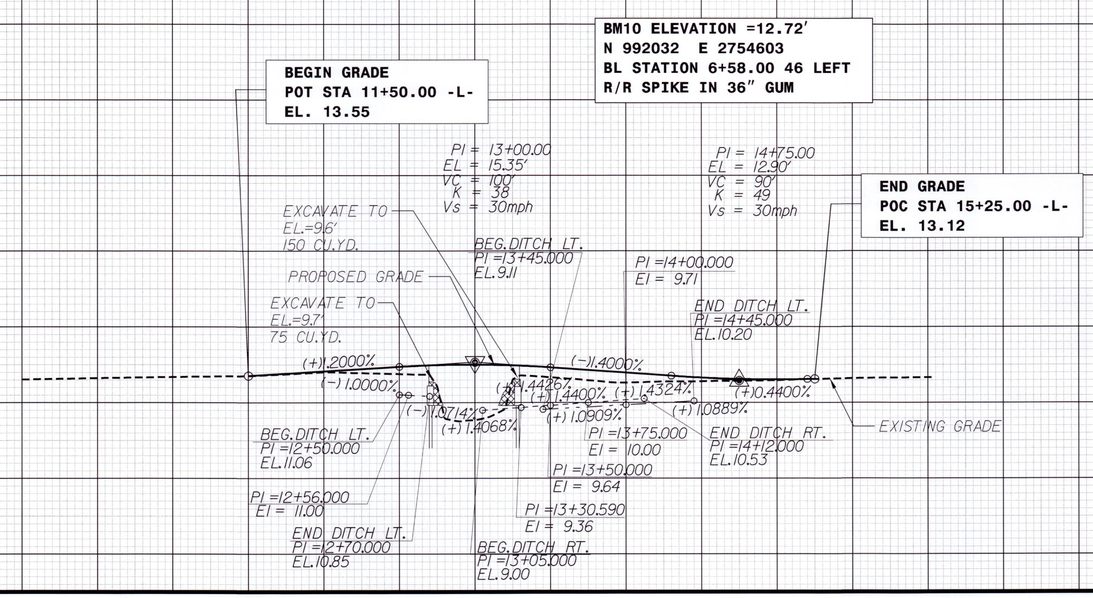

REVISIONS

8/17/99

6/24/2014 3:06:14 PM
\Projects\BD-5101M_RDY_PSH_04.dgn

NOTES: *ANY DEVIATION FROM OPTIONS GIVEN WILL REQUIRE PRIOR APPROVAL BY ENGINEER.*

ADDITIONAL EROSION CONTROL DEVICES MAY NEED TO BE INSTALLED AS DIRECTED BY THE ENGINEER.

30' 0' 30' 60'
ENGLISH

PROJECT REFERENCE NO.	SHEET NO.
17BP.1.R.72	EC-1
R/W SHEET NO.	

Prepared by:

MI ENGINEERING, PLLC

Designed by: Jerry Beard, PE
Level III: Designer of Erosion and Sediment Control Plans
Certification Number: 3167

1011 SCHAUB DRIVE, SUITE 100
RALEIGH, NC 27606
919-851-6606 (PH)
919-851-6645 (F)

2012 STANDARD SPECIFICATIONS

NORTH CAROLINA PROFESSIONAL SEAL 19669 ENGINEER JEROME J. BEARD

12/4/13

EROSION CONTROL PLAN

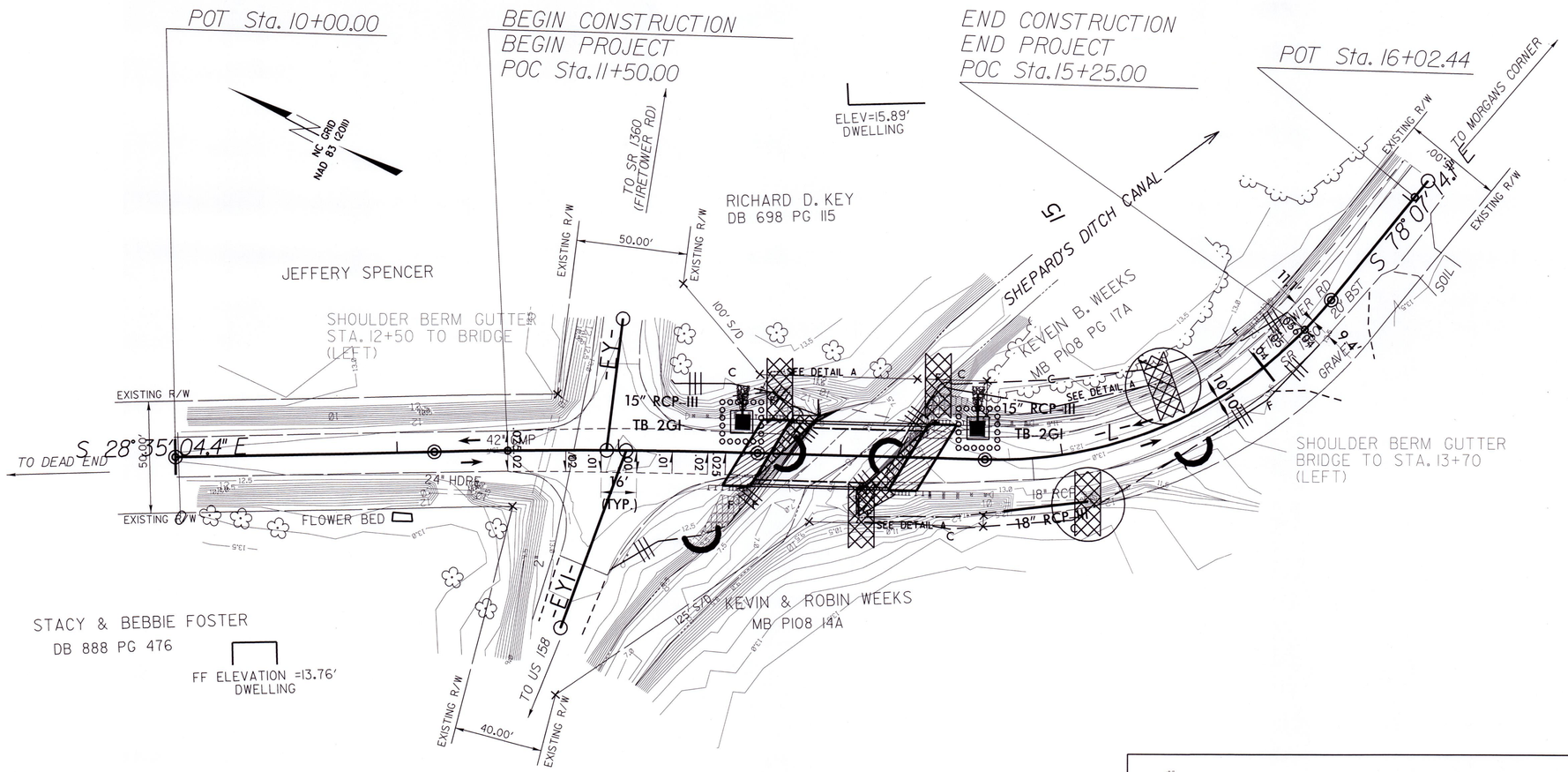

SITE DESCRIPTION	STABILIZATION TIME	TIMEFRAME EXCEPTIONS
PERIMETER DIKES, SWALES, DITCHES AND SLOPES	7 DAYS	NONE
HIGH QUALITY WATER (HQW) ZONES	7 DAYS	NONE
SLOPES STEEPER THAN 3:1	7 DAYS	IF SLOPES ARE 10' OR LESS IN LENGTH AND ARE NOT STEEPER THAN 2:1, 14 DAYS ARE ALLOWED.
SLOPES 3:1 OR FLATTER	14 DAYS	7 DAYS FOR SLOPES GREATER THAN 50' IN LENGTH.
ALL OTHER AREAS WITH SLOPES FLATTER THAN 4:1	14 DAYS	NONE, EXCEPT FOR PERIMETERS AND HQW ZONES.

Std. #	Description	Symbol	QUANTITY
1605.01	High Vis Temporary Silt Fence		280 LF
1632.03	Rock Inlet Sediment Trap Type C		2 EA.
SP	Coir Fiber Wattle Barrier		80 LF
1633.01	Temp. Rock Sit Check Type A		3 EA.
1633.01	Temp. Rock Sit Check Type A With Matting & PAM		2 EA.

NOTES: *ANY DEVIATION FROM OPTIONS GIVEN WILL REQUIRE PRIOR APPROVAL BY ENGINEER.*

ADDITIONAL EROSION CONTROL DEVICES MAY NEED TO BE INSTALLED AS DIRECTED BY THE ENGINEER.

30' 0' 30' 60'
ENGLISH

PROJECT REFERENCE NO.	SHEET NO.
17BP.1.R.72	EC-2
R/W SHEET NO.	

Prepared by:

MI ENGINEERING, PLLC

Designed by: Jerry Beard, PE
Level III: Designer of Erosion and Sediment Control Plans
Certification Number: 3167

1011 SCHAUB DRIVE, SUITE 100
RALEIGH, NC 27606
919-851-6606 (PH)
919-851-6645 (F)

2012 STANDARD SPECIFICATIONS

NORTH CAROLINA PROFESSIONAL SEAL 19669 ENGINEER JEROME JERRY BEARD
12/4/13

EROSION CONTROL PLAN

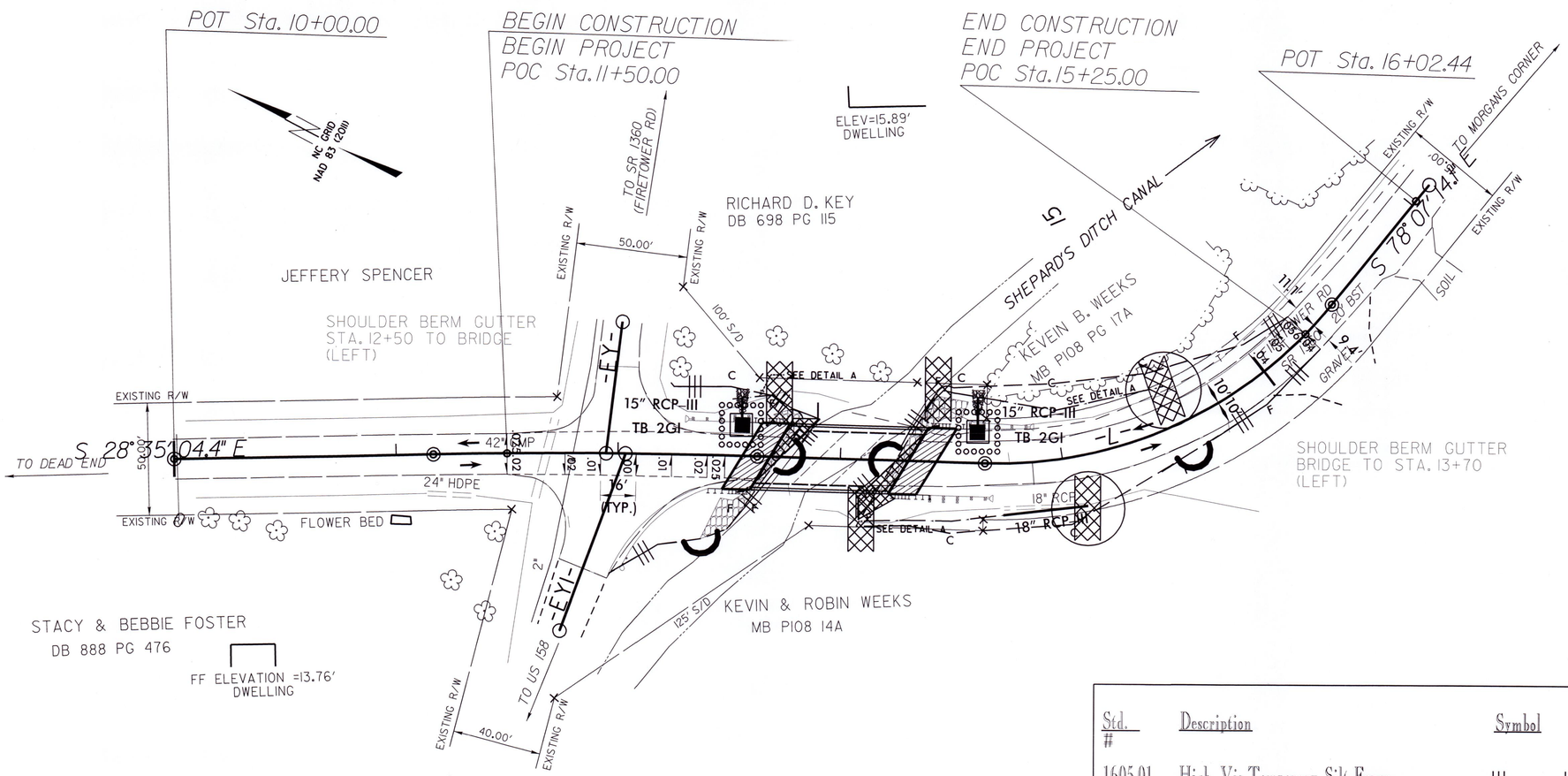

SITE DESCRIPTION	STABILIZATION TIME	TIMEFRAME EXCEPTIONS
PERIMETER DIKES, SWALES, DITCHES AND SLOPES	7 DAYS	NONE
HIGH QUALITY WATER (HQW) ZONES	7 DAYS	NONE
SLOPES STEEPER THAN 3:1	7 DAYS	IF SLOPES ARE 10' OR LESS IN LENGTH AND ARE NOT STEEPER THAN 2:1, 14 DAYS ARE ALLOWED.
SLOPES 3:1 OR FLATTER	14 DAYS	7 DAYS FOR SLOPES GREATER THAN 50' IN LENGTH.
ALL OTHER AREAS WITH SLOPES FLATTER THAN 4:1	14 DAYS	NONE, EXCEPT FOR PERIMETERS AND HQW ZONES.

Std. #	Description	Symbol	QUANTITY
1605.01	High Vis Temporary Silt Fence		280 LF
1632.03	Rock Inlet Sediment Trap Type C		2 EA.
SP	Coir Fiber Wattle Barrier		80 LF
1633.01	Temp. Rock Sit Check Type A		3 EA.
1633.01	Temp. Rock Sit Check Type A With Matting & PAM		2 EA.

PROJECT REFERENCE NO.	SHEET NO.
17BP.1.R.72	EC-2G
R/W SHEET NO.	
ROADWAY DESIGN ENGINEER	HYDRAULICS ENGINEER

COIR FIBER WATTLE DETAIL

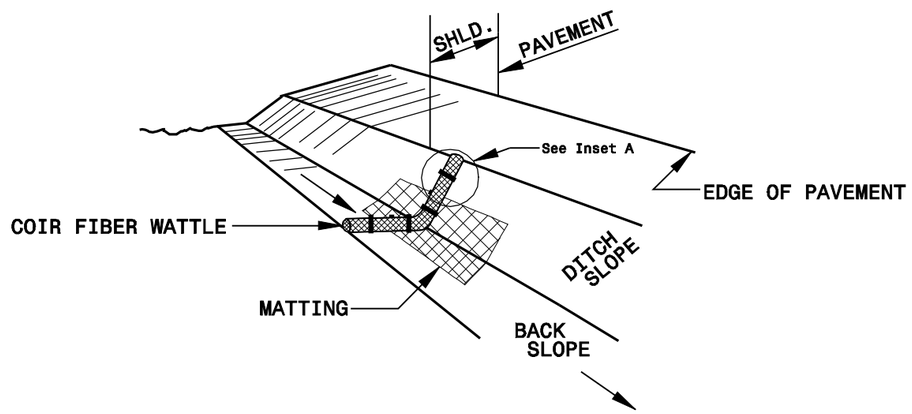

ISOMETRIC VIEW

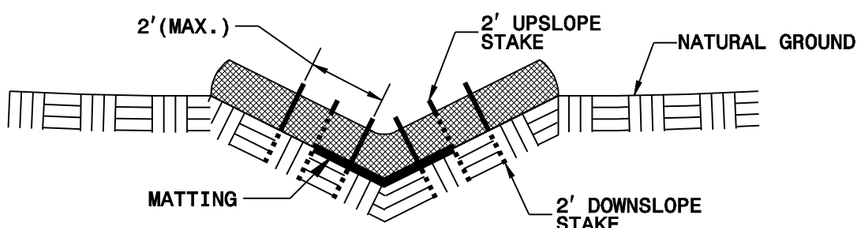

CROSS SECTION VEE DITCH

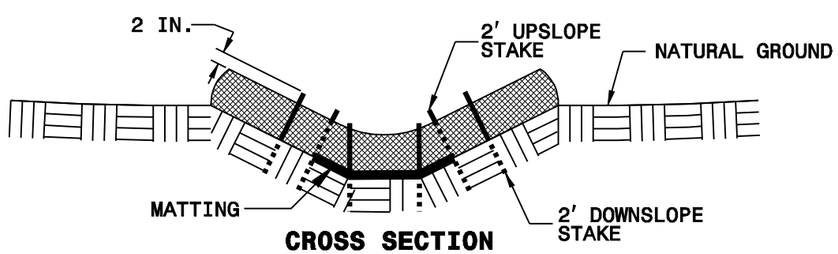

CROSS SECTION TRAPEZOIDAL DITCH

NOTES:

USE MINIMUM 12 IN. DIAMETER COIR FIBER (COCONUT FIBER) WATTLE.

USE 2 FT. WOODEN STAKES WITH A 2 IN. BY 2 IN. NOMINAL CROSS SECTION.

ONLY INSTALL WATTLE(S) TO A HEIGHT IN DITCH SO FLOW WILL NOT WASH AROUND WATTLE AND SCOUR DITCH SLOPES AND AS DIRECTED.

INSTALL A MINIMUM OF 2 UPSLOPE STAKES AND 4 DOWNSLOPE STAKES AT AN ANGLE TO WEDGE WATTLE TO BOTTOM OF DITCH.

PROVIDE STAPLES MADE OF 0.125 IN. DIAMETER STEEL WIRE FORMED INTO A U SHAPE NOT LESS THAN 12" IN LENGTH.

INSTALL STAPLES APPROXIMATELY EVERY 1 LINEAR FOOT ON BOTH SIDES OF WATTLE AND AT EACH END TO SECURE IT TO THE SOIL.

INSTALL MATTING IN ACCORDANCE WITH SECTION 1631 OF THE STANDARD SPECIFICATIONS.

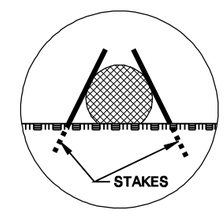

INSET A

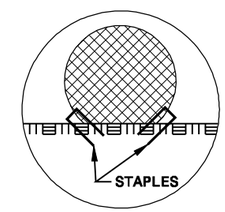

INSET B

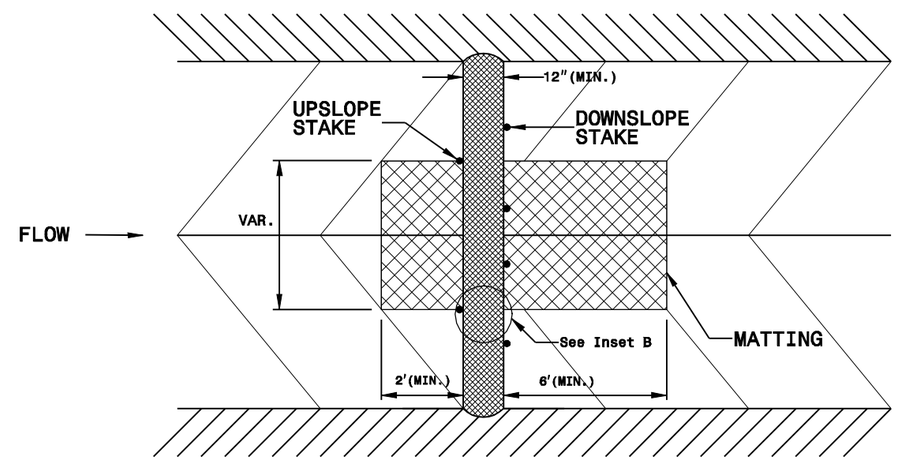

TOP VIEW

PROJECT REFERENCE NO.	SHEET NO.
17BP.1.R.72	EC-3

COIR FIBER WATTLE BARRIER DETAIL

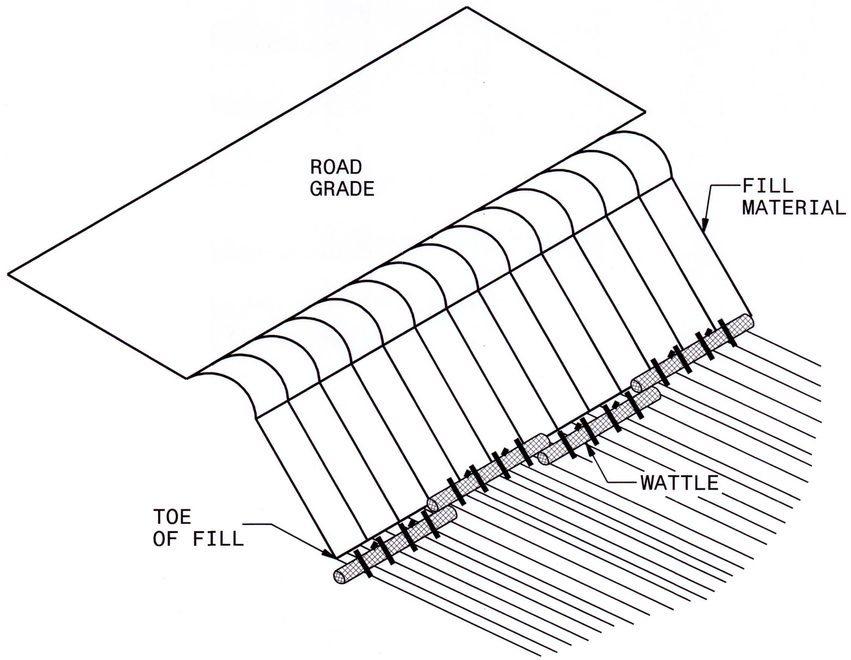

ISOMETRIC VIEW

NOTES:

USE MINIMUM 18 IN. NOMINAL DIAMETER COIR FIBER (COCONUT) WATTLE AND LENGTH OF 10 FT.

EXCAVATE A 2 TO 3 INCH TRENCH FOR WATTLE TO BE PLACED.

DO NOT PLACE WATTLES ON TOE OF SLOPE.

USE 2 FT. WOODEN STAKES WITH A 2 IN. BY 2 IN. NOMINAL CROSS SECTION.

INSTALL A MINIMUM OF 2 UPSLOPE STAKES AND 4 DOWNSLOPE STAKES AT AN ANGLE TO WEDGE WATTLE TO GROUND.

PROVIDE STAPLES MADE OF 0.125 IN. DIAMETER STEEL WIRE FORMED INTO A U SHAPE NOT LESS THAN 12″ IN LENGTH.

INSTALL STAPLES APPROXIMATELY EVERY 1 LINEAR FOOT ON BOTH SIDES OF WATTLE AND AT EACH END TO SECURE IT TO THE SOIL.

FOR BREAKS ALONG LARGE SLOPES, USE MAXIMUM SPACING OF 20 FT.

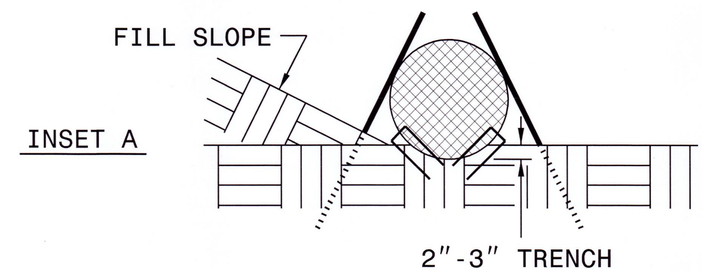

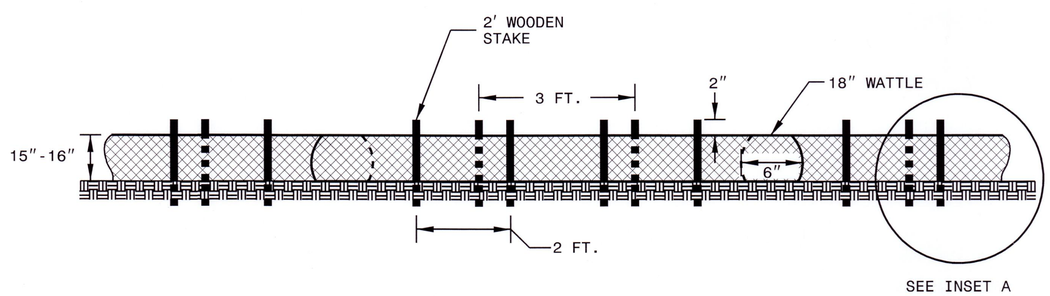

FRONT VIEW

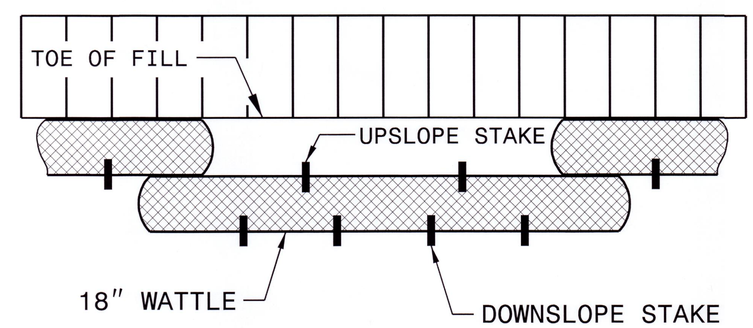

TOP VIEW

PROJECT REFERENCE NO.	SHEET NO.
17BP.1.R.72	EC-4
R/W SHEET NO.	
ROADWAY DESIGN ENGINEER	HYDRAULICS ENGINEER

SILT FENCE COIR FIBER WATTLE BREAK DETAIL

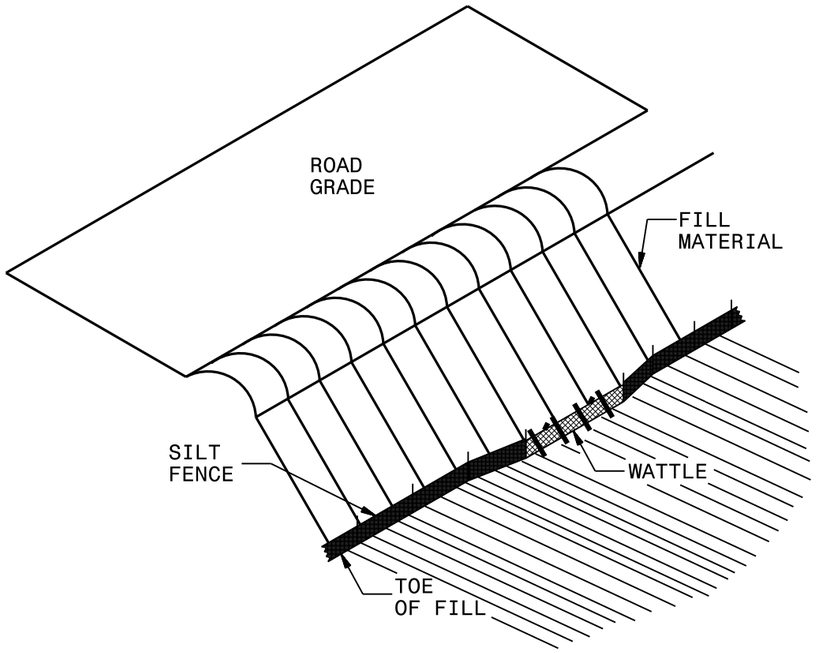

ISOMETRIC VIEW

NOTES:

USE MINIMUM 12 IN. DIAMETER COIR FIBER (COCONUT FIBER) WATTLE AND LENGTH OF 10 FT.

EXCAVATE A 1 TO 2 INCH TRENCH FOR WATTLE TO BE PLACED.

DO NOT PLACE WATTLE ON TOE OF SLOPE.

USE 2 FT. WOODEN STAKES WITH A 2 IN. BY 2 IN. NOMINAL CROSS SECTION.

INSTALL A MINIMUM OF 2 UPSLOPE STAKES AND 4 DOWNSLOPE STAKES AT AN ANGLE TO WEDGE WATTLE TO GROUND.

PROVIDE STAPLES MADE OF 0.125 IN. DIAMETER STEEL WIRE FORMED INTO A U SHAPE NOT LESS THAN 12″ IN LENGTH.

INSTALL STAPLES APPROXIMATELY EVERY 1 LINEAR FOOT ON BOTH SIDES OF WATTLE AND AT EACH END TO SECURE IT TO THE SOIL.

WATTLE INSTALLATION CAN BE ON OUTSIDE OF THE SILT FENCE AS DIRECTED.

INSTALL TEMPORARY SILT FENCE IN ACCORDANCE WITH SECTION 1605 OF THE STANDARD SPECIFICATIONS.

INSET A

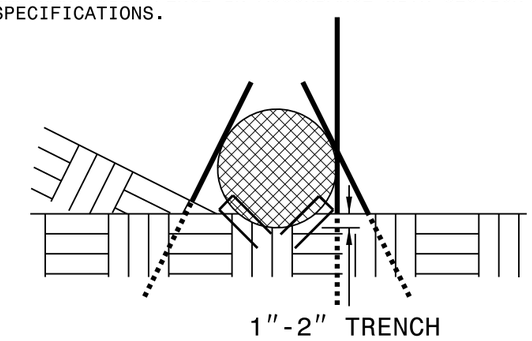

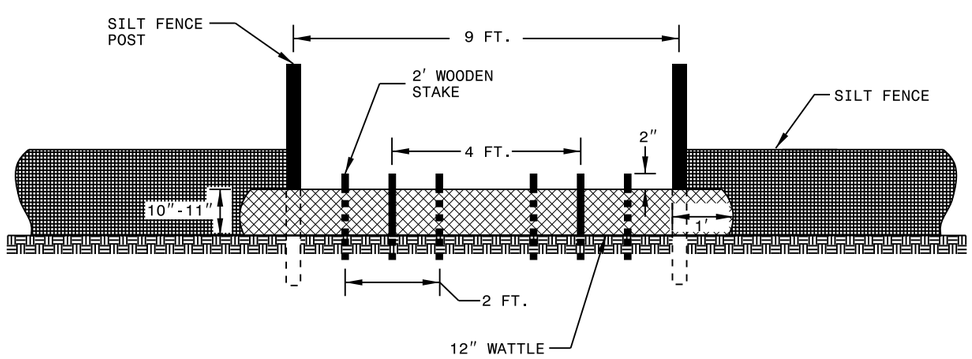

VIEW FROM SLOPE

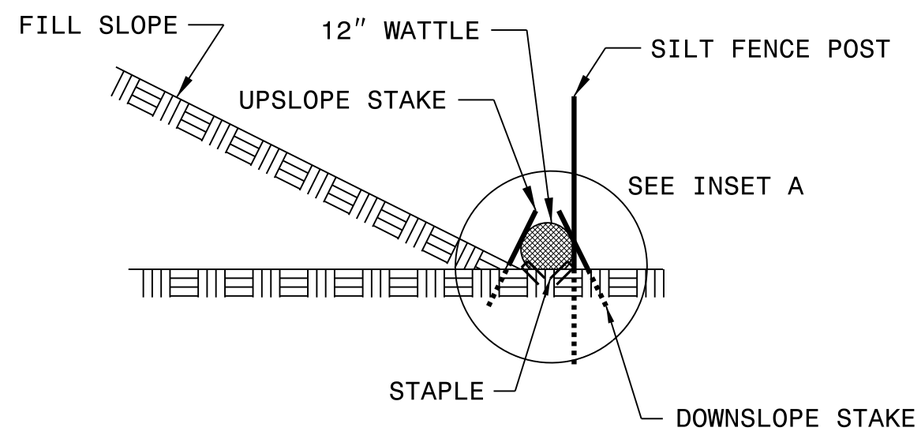

SIDE VIEW

STATE OF NORTH CAROLINA
NCDOT RAIL DIVISION

CROSS-SECTION SUMMARY

NOTE: EMBANKMENT COLUMN DOES NOT INCLUDE BACKFILL FOR UNDERCUT

Station L	Uncl. Exc. (cu. yd.)	Embt (cu. yd.)
12+00.00	0	0
12+50.00	5	27
12+68.34	4	53
13+31.30	0	2
13+50.00	7	69
14+00.00	55	89
14+50.00	46	38
15+00.00	10	9
15+25.00	0	1

QUANTITIES ARE APPROXIMATE ONLY. THE RESIDENT ENGINEER WILL RECROSS-SECTION THE WORK ACCURATELY WHEN THE PROJECT IS STAKED OUT. THESE CROSS-SECTION NOTES WILL BE USED IN COMPUTING THE FINAL QUANTITIES FOR WHICH THE CONTRACTOR WILL BE PAID.

8/23/99

6/20/2014 10:34:13 AM
N:\Xse\BD-5101M_RDY_XPL_LL.dgn
USER:CLOCKSON

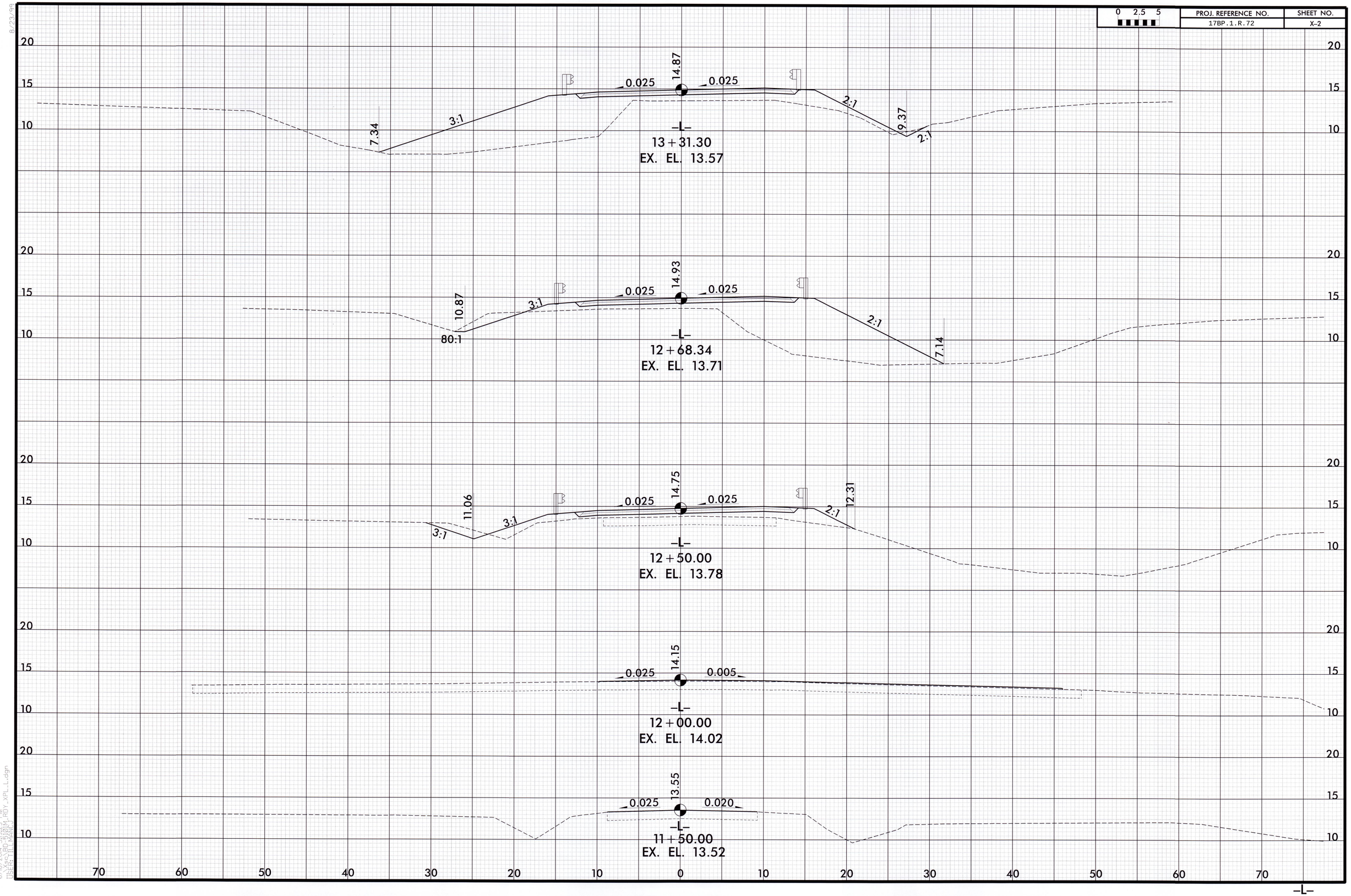
0 2.5 5
PROJ. REFERENCE NO.
17BP.1.R.72
SHEET NO.
X-2
14.87
0.025
0.025
7.34
3:1
2:1
9.37
2:1
-L-
13+31.30
EX. EL. 13.57
14.93
0.025
0.025
10.87
3:1
80:1
2:1
7.14
-L-
12+68.34
EX. EL. 13.71
14.75
0.025
0.025
11.06
3:1
3:1
2:1
12.31
-L-
12+50.00
EX. EL. 13.78
14.15
0.025
0.005
-L-
12+00.00
EX. EL. 14.02
13.55
0.025
0.020
-L-
11+50.00
EX. EL. 13.52
20
15
10
70
60
50
40
30
20
10
0
10
20
30
40
50
60
70
-L-

PROJ. REFERENCE NO.	SHEET NO.
17BP.1.R.72	X-3

0 2.5 5

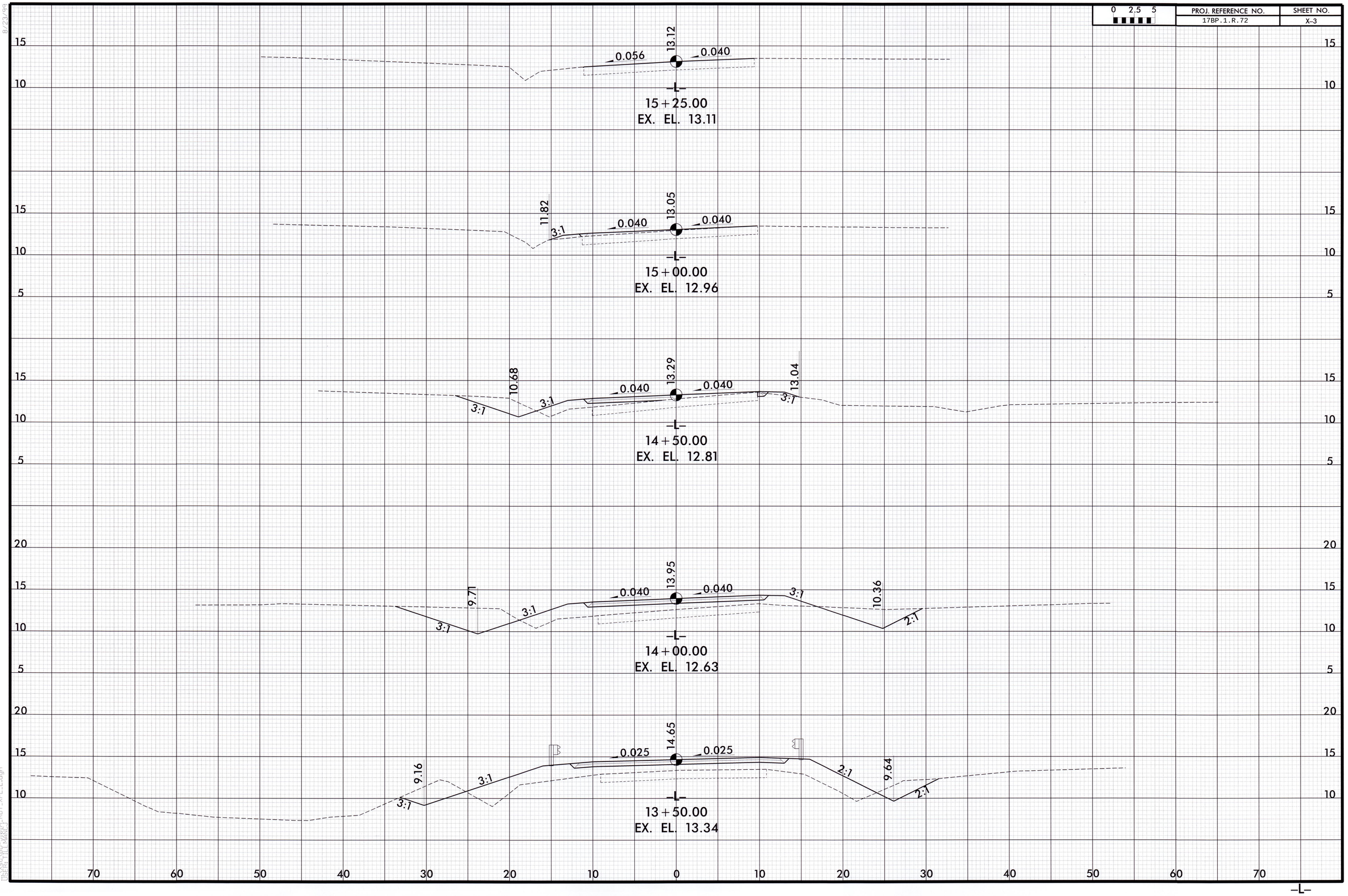

8/23/99

7/7/2014 4:30:35 PM
X:\Sec\80-510M_R0Y_XPL_L.dgn
USER: FELIMANCO

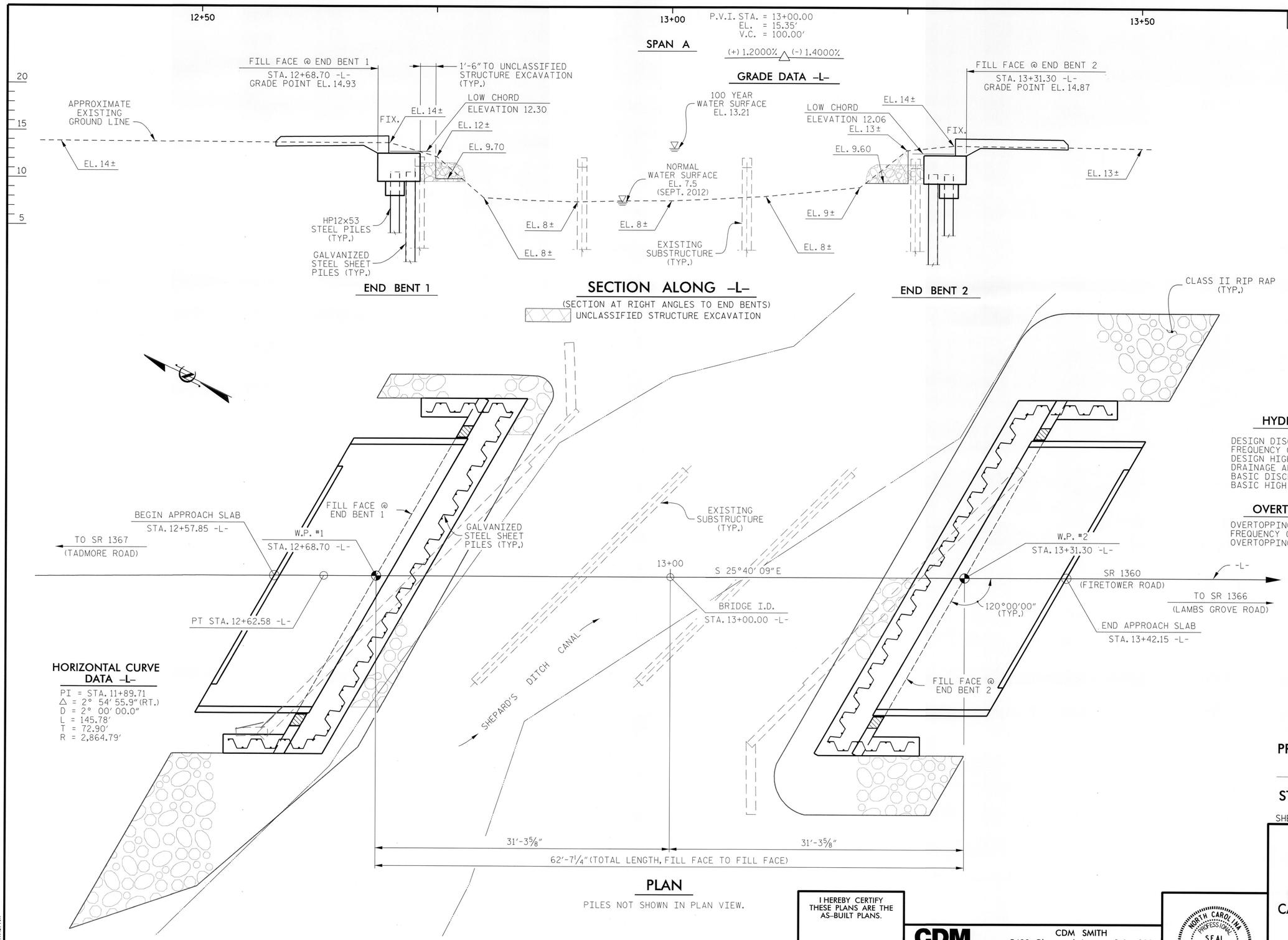

HYDRAULIC DATA

DESIGN DISCHARGE	= 220 CFS
FREQUENCY OF DESIGN FLOOD	= 25 YEARS
DESIGN HIGH WATER ELEVATION	= 13.0 FT.
DRAINAGE AREA	= 0.87 SQ. MI.
BASIC DISCHARGE (Q100)	= 350 CFS
BASIC HIGH WATER ELEVATION	= 13.21 FT.

OVERTOPPING FLOOD DATA

OVERTOPPING DISCHARGE	= 300 CFS
FREQUENCY OF OVERTOPPING FLOOD	= 50+ YEARS
OVERTOPPING FLOOD ELEVATION	= 13.1 FT.

HORIZONTAL CURVE DATA -L-

PI = STA. 11+89.71
△ = 2° 54' 55.9" (RT.)
D = 2° 00' 00.0"
L = 145.78'
T = 72.90'
R = 2,864.79'

PLAN

PILES NOT SHOWN IN PLAN VIEW.

PROJECT NO. 17BP.1.R.72

PASQUOTANK COUNTY

STATION: 13+00.00 -L-

SHEET 1 OF 2 REPLACES BRIDGE No. 14

I HEREBY CERTIFY THESE PLANS ARE THE AS-BUILT PLANS.

CDM Smith

CDM SMITH
5400 Glenwood Avenue, Suite 300
Raleigh, NC 27612-3228
NC COA No. F-1255

DRAWN BY :	C.E.DIXON / J. SLOAN	DATE :	07-14
CHECKED BY :	J.B.TAYLOR	DATE :	07-14
DESIGN ENGINEER :	J.B.TAYLOR	DATE :	07-14

DWG. No. 1

NORTH CAROLINA PROFESSIONAL SEAL 33698 ENGINEER JOSHUA B. TAYLOR
07-07-14

STATE OF NORTH CAROLINA
DEPARTMENT OF TRANSPORTATION
RALEIGH

GENERAL DRAWING

BRIDGE OVER SHEPARD'S DITCH CANAL ON SR 1360 (-L-) BETWEEN SR 1367 AND SR 1366

REVISIONS						SHEET No.
No.	BY:	DATE:	No.	BY:	DATE:	
1			3			TOTAL SHEETS
2			4			

FILE: R:\model\BD-5101M\Structures\PLANS\BD5101M_Bridge_14_Sht_1.dgn
DATE: 7/7/2014 8:19:21 AM

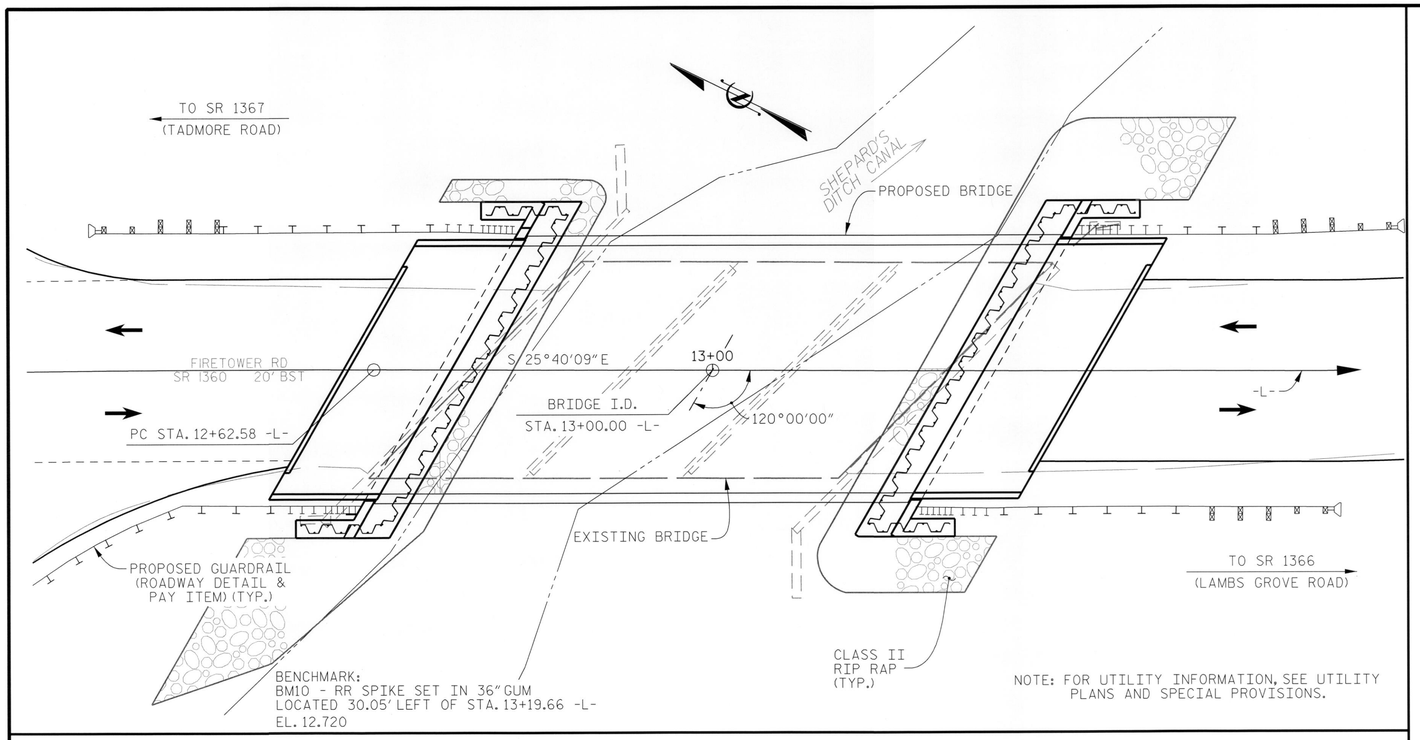

LOCATION SKETCH

GENERAL NOTES

ASSUMED LIVE LOAD = HL-93 OR ALTERNATE LOADING.

FOR OTHER DESIGN DATA AND GENERAL NOTES, SEE SHEET SN.

FOR EROSION CONTROL MEASURES SEE EROSION CONTROL PLANS.

THIS BRIDGE HAS BEEN DESIGNED IN ACCORDANCE WITH THE AASHTO LRFD BRIDGE DESIGN SPECIFICATIONS.

THE EXISTING 3 SPAN STRUCTURE (1 @ 17'-6", 1 @ 17'-0", 1 @ 17'-6") WITH 19 LINES OF TIMBER JOISTS AT 1'-4" SPACES SUPPORTING REINFORCED CONCRETE DECK WITH EPOXY WEARING SURFACE WITH 24'-1" CLEAR ROADWAY WIDTH ON TIMBER CAP AND TIMBER PILES SHALL BE REMOVED.

REMOVAL OF THE EXISTING BRIDGE SHALL BE PERFORMED SO AS NOT TO ALLOW DEBRIS TO FALL INTO THE WATER. THE CONTRACTOR SHALL REMOVE THE BRIDGE AND SUBMIT PLANS FOR DEMOLITION IN ACCORDANCE WITH ARTICLE 402-2 OF THE STANDARD SPECIFICATIONS.

THE MATERIAL SHOWN IN THE CROSS-HATCHED AREA SHALL BE EXCAVATED FOR A DISTANCE OF 18 FT. EACH SIDE OF CENTERLINE ROADWAY AS DIRECTED BY THE ENGINEER. THIS WORK WILL BE PAID FOR AT THE CONTRACT LUMP SUM PRICE FOR UNCLASSIFIED STRUCTURE EXCAVATION. SEE SECTION 412 OF THE STANDARD SPECIFICATIONS.

THE SUBSTRUCTURE OF THE EXISTING BRIDGE INDICATED ON THE PLANS IS FROM THE BEST INFORMATION AVAILABLE. SINCE THIS INFORMATION IS SHOWN FOR THE CONVENIENCE OF THE CONTRACTOR, THE CONTRACTOR SHALL HAVE NO CLAIM WHATSOEVER AGAINST THE DEPARTMENT OF TRANSPORTATION FOR ANY DELAYS OR ADDITIONAL COST INCURRED BASED ON DIFFERENCES BETWEEN THE EXISTING BRIDGE SUBSTRUCTURE SHOWN ON THE PLANS AND THE ACTUAL CONDITIONS AT THE PROJECT SITE.

ASPHALT WEARING SURFACE IS INCLUDED IN ROADWAY QUANTITY ON ROADWAY PLANS.

THIS STRUCTURE HAS BEEN DESIGNED IN ACCORDANCE WITH HEC 18, "EVALUATING SCOUR AT BRIDGES".

THE CONTRACTOR SHALL PROVIDE INDEPENDENT ASSURANCE SAMPLES OF REINFORCING STEEL AS FOLLOWS: FOR PROJECTS REQUIRING UP TO 400 TONS OF REINFORCING STEEL, ONE 30 INCH SAMPLE OF EACH SIZE BAR USED, AND FOR PROJECTS REQUIRING OVER 400 TONS OF REINFORCING STEEL, TWO 30 INCH SAMPLES OF EACH SIZE BAR USED. THE BARS FROM WHICH THE SAMPLES ARE TAKEN MUST THEN BE SPLICED WITH REPLACEMENT BARS OF THE SIZE AND LENGTH OF THE SAMPLE, PLUS A MINIMUM LAP SPLICE OF THIRTY BAR DIAMETERS. PAYMENT FOR THE SAMPLES OF REINFORCING STEEL SHALL BE CONSIDERED INCIDENTAL TO VARIOUS PAY ITEMS.

FOR SUBMITTAL OF WORKING DRAWINGS, SEE SPECIAL PROVISIONS.

FOR FALSEWORK AND FORMWORK, SEE SPECIAL PROVISIONS.

FOR CRANE SAFETY, SEE SPECIAL PROVISIONS.

FOR GROUT FOR STRUCTURES, SEE SPECIAL PROVISIONS.

FOR STEEL SHEET PILES, SEE SPECIAL PROVISIONS.

THIS BRIDGE IS LOCATED IN SEISMIC ZONE 1.

TOTAL BILL OF MATERIAL

	REMOVAL OF EXISTING STRUCTURE AT STA. 13+00 -L-	PDA TESTING	UNCLASSIFIED STRUCTURE EXCAVATION AT STA. 13+00 -L-	CLASS A CONCRETE	BRIDGE APPROACH SLABS AT STA. 13+00 -L-	REINFORCING STEEL	HP 12 x 53 STEEL PILES		PILE REDRIVES	VERTICAL CONCRETE BARRIER RAIL	RIP RAP CLASS II (2'-0" THICK)	GEOTEXTILE FOR DRAINAGE	ELASTOMERIC BEARINGS	3'-0" x 2'-0" PRESTRESSED CONCRETE CORED SLABS		GALVANIZED STEEL SHEET PILES	
	LUMP SUM	EACH	LUMP SUM	CU. YD.	LUMP SUM	LBS.	No.	LIN. FT.	EACH	LIN. FT.	TONS	SQ. YD.	LUMP SUM	No.	LIN. FT.	No.	LIN. FT.
SUPERSTRUCTURE	LUMP SUM	-	-	-	LUMP SUM	-	-	-	-	120	-	-	LUMP SUM	10	600	-	-
END BENT 1	-	-	LUMP SUM	20.9	-	2,785	5	400	1	-	55	57	-	-	-	41	1,837
END BENT 2	-	-	LUMP SUM	20.9	-	2,785	5	400	1	-	55	60	-	-	-	41	1,835
TOTAL	LUMP SUM	1	LUMP SUM	41.8	LUMP SUM	5,570	10	800	2	120	110	117	LUMP SUM	10	600	82	3,672

FOUNDATION NOTES

FOR PILES, SEE SECTION 450 OF THE STANDARD SPECIFICATIONS.

PILES AT END BENT NOS. 1 AND 2 ARE DESIGNED FOR A FACTORED RESISTANCE OF 90 TONS PER PILE.

DRIVE PILES AT BENT NOS. 1 AND 2 TO A REQUIRED DRIVING RESISTANCE OF 150 TONS PER PILE.

INSTALL PILES AT END BENT NOS. 1 AND 2 TO A TIP ELEVATION NO HIGHER THAN -60 FT.

IT HAS BEEN ESTIMATED THAT A HAMMER WITH AN EQUIVALENT RATED ENERGY IN THE RANGE OF 40,000 TO 45,000 FT-LBS PER BLOW WILL BE REQUIRED TO DRIVE PILES AT END BENT NOS. 1 AND 2.

THIS ESTIMATED ENERGY RANGE DOES NOT RELEASE THE CONTRACTOR FROM PROVIDING DRIVING EQUIPMENT IN ACCORDANCE WITH SUBARTICLE 450-3(D)(2) OF THE STANDARD SPECIFICATIONS.

TESTING THE FIRST PRODUCTION PILE DRIVEN AT AN END BENT WITH THE PDA DURING DRIVING IS REQUIRED. FOR PDA TESTING, SEE SECTION 450 OF THE STANDARD SPECIFICATIONS AND FOR PILE DRIVING CRITERIA, SEE PILE DRIVING CRITERIA PROVISION.

THE SCOUR CRITICAL ELEVATION FOR VERTICAL ABUTMENTS AT END BENT 1 AND END BENT 2 IS ELEVATION 6 FEET. SCOUR CRITICAL ELEVATIONS ARE USED TO MONITOR POSSIBLE SCOUR PROBLEMS DURING THE LIFE OF THE STRUCTURE.

INSTALL STEEL SHEET PILES AT END BENT NO. 1 AND END BENT NO. 2 TO A SHEETING TIP ELEVATION OF -17.5 FEET.

USE STEEL SHEET PILING WITH A MINIMUM SECTION MODULUS OF 18.1 IN3/FT.

PROJECT NO. 17BP.1.R.72
PASQUOTANK COUNTY
STATION: 13+00.00 -L-

SHEET 2 OF 2

STATE OF NORTH CAROLINA
DEPARTMENT OF TRANSPORTATION
RALEIGH

GENERAL DRAWING

BRIDGE OVER SHEPARD'S DITCH CANAL ON SR 1360 (-L-) BETWEEN SR 1367 AND SR 1366

CDM Smith
CDM SMITH
5400 Glenwood Avenue, Suite 300
Raleigh, NC 27612-3228
NC COA No. F-1255

DRAWN BY : C.E.DIXON / J. SLOAN DATE : 06-14
CHECKED BY : J.B.TAYLOR DATE : 06-14
DESIGN ENGINEER : J.B.TAYLOR DATE : 06-14

DWG. No. 2

NORTH CAROLINA PROFESSIONAL SEAL 33698 ENGINEER JOSHUA B. TAYLOR
06-20-14

REVISIONS						SHEET No.
No.	BY:	DATE:	No.	BY:	DATE:	S-02
1			3			TOTAL SHEETS
2			4			

FILE: R:\ncdot\BD-3101M\Structures\PLANS\BD3101M_Bridge_14_Sht_2.dgn
DATE: 6/20/2014 8:43:37 AM

LOAD AND RESISTANCE FACTOR RATING (LRFD) SUMMARY FOR PRESTRESSED CONCRETE GIRDERS

LEVEL		VEHICLE	WEIGHT (W) (TONS)	CONTROLLING LOAD RATING	MINIMUM RATING FACTORS (RF)	TONS = W X RF	STRENGTH I LIMIT STATE											SERVICE III LIMIT STATE						COMMENT NUMBER
							LIVELOAD FACTORS	MOMENT					SHEAR					LIVELOAD FACTORS	MOMENT					
								DISTRIBUTION FACTORS (DF)	RATING FACTOR	SPAN	GIRDER LOCATION	DISTANCE FROM LEFT END OF SPAN (ft)	DISTRIBUTION FACTORS (DF)	RATING FACTOR	SPAN	GIRDER LOCATION	DISTANCE FROM LEFT END OF SPAN (ft)		DISTRIBUTION FACTORS (DF)	RATING FACTOR	SPAN	GIRDER LOCATION	DISTANCE FROM LEFT END OF SPAN (ft)	
DESIGN LOAD RATING		HL-93(Inv)	N/A	(1)	1.133	--	1.75	0.249	1.48	60'	EL	29.423	0.649	**1.13**	60'	EL	**5.885**	0.80	0.249	1.52	60'	EL	29.423	
		HL-93(Opr)	N/A	--	1.468	--	1.35	0.249	1.91	60'	EL	29.423	0.649	1.47	60'	EL	5.885	N/A	--	--	--	--	--	
		HS-20(Inv)	36.000	(2)	1.364	49.098	1.75	0.249	1.87	60'	EL	29.423	0.649	**1.36**	60'	EL	**5.885**	0.80	0.249	1.92	60'	EL	29.423	
		HS-20(Opr)	36.000	--	1.768	63.645	1.35	0.249	2.42	60'	EL	29.423	0.649	1.77	60'	EL	5.885	N/A	--	--	--	--	--	
LEGAL LOAD RATING	SV	SNSH	13.500	--	3.938	53.159	1.40	0.249	5.03	60'	EL	29.423	0.649	3.94	60'	EL	5.885	0.80	0.249	4.13	60'	EL	29.423	
		SNGARBS2	20.000	--	2.837	56.744	1.40	0.249	3.85	60'	EL	29.423	0.649	2.84	60'	EL	5.885	0.80	0.249	3.17	60'	EL	29.423	
		SNAGRIS2	22.000	--	2.648	58.256	1.40	0.249	3.69	60'	EL	29.423	0.649	2.65	60'	EL	5.885	0.80	0.249	3.03	60'	EL	29.423	
		SNCOTTS3	27.250	--	1.970	53.671	1.40	0.249	2.50	60'	EL	29.423	0.649	1.97	60'	EL	5.885	0.80	0.249	2.06	60'	EL	29.423	
		SNAGGRS4	34.925	--	1.661	58.001	1.40	0.249	2.13	60'	EL	29.423	0.649	1.66	60'	EL	5.885	0.80	0.249	1.75	60'	EL	29.423	
		SNS5A	35.550	--	1.696	60.293	1.40	0.249	2.08	60'	EL	29.423	0.649	1.70	60'	EL	5.885	0.80	0.249	1.71	60'	EL	29.423	
		SNS6A	39.950	--	1.558	62.257	1.40	0.249	1.93	60'	EL	29.423	0.649	1.56	60'	EL	5.885	0.80	0.249	1.58	60'	EL	29.423	
		SNS7B	42.000	--	1.510	63.410	1.40	0.249	1.84	60'	EL	29.423	0.649	1.55	60'	EL	5.885	0.80	0.249	1.51	60'	EL	29.423	
	TTST	TNAGRIT3	33.000	--	1.846	60.907	1.40	0.249	2.36	60'	EL	29.423	0.649	1.85	60'	EL	5.885	0.80	0.249	1.94	60'	EL	29.423	
		TNT4A	33.075	--	1.787	59.108	1.40	0.249	2.37	60'	EL	29.423	0.649	1.79	60'	EL	5.885	0.80	0.249	1.95	60'	EL	29.423	
		TNT6A	41.600	--	1.607	66.863	1.40	0.249	1.96	60'	EL	29.423	0.649	1.67	60'	EL	5.885	0.80	0.249	1.61	60'	EL	29.423	
		TNT7A	42.000	--	1.598	67.100	1.40	0.249	1.97	60'	EL	29.423	0.649	1.60	60'	EL	5.885	0.80	0.249	1.62	60'	EL	29.423	
		TNT7B	42.000	--	1.499	62.942	1.40	0.249	2.06	60'	EL	29.423	0.649	1.50	60'	EL	5.885	0.80	0.249	1.69	60'	EL	29.423	
		TNAGRIT4	43.000	--	1.447	62.223	1.40	0.249	1.95	60'	EL	29.423	0.649	1.45	60'	EL	5.885	0.80	0.249	1.60	60'	EL	29.423	
		TNAGT5A	45.000	--	1.455	65.474	1.40	0.249	1.83	60'	EL	29.423	0.649	1.45	60'	EL	5.885	0.80	0.249	1.50	60'	EL	29.423	
		TNAGT5B	45.000	(3)	1.374	61.845	1.40	0.249	1.80	60'	EL	29.423	0.649	**1.37**	60'	EL	**5.885**	0.80	0.249	1.48	60'	EL	29.423	

LOAD FACTORS:

DESIGN LOAD RATING FACTORS	LIMIT STATE	γ_{DC}	γ_{DW}
	STRENGTH I	1.25	1.50
	SERVICE III	1.00	1.00

NOTES:

MINIMUM RATING FACTORS ARE BASED ON THE STRENGTH I AND SERVICE III LIMIT STATES.

ALLOWABLE STRESSES FOR SERVICE III LIMIT STATE ARE AS REQUIRED FOR DESIGN.

COMMENTS:

1.
2.
3.
4.

(#) CONTROLLING LOAD RATING

(1) DESIGN LOAD RATING (HL-93)

(2) DESIGN LOAD RATING (HS-20)

(3) LEGAL LOAD RATING **

** SEE CHART FOR VEHICLE TYPE

GIRDER LOCATION

I - INTERIOR GIRDER
EL - EXTERIOR LEFT GIRDER
ER - EXTERIOR RIGHT GIRDER

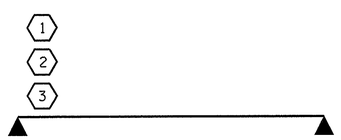

LRFR SUMMARY

FOR SPAN 'A'

PROJECT NO. 17BP.1.R.72

PASQUOTANK COUNTY

STATION: 13+00.00 -L-

STATE OF NORTH CAROLINA
DEPARTMENT OF TRANSPORTATION
RALEIGH

STANDARD

LRFR SUMMARY FOR 60' CORED SLAB UNIT 120° SKEW

(NON-INTERSTATE TRAFFIC)

NORTH CAROLINA PROFESSIONAL SEAL 14045 ENGINEER TIMOTHY C. COGGINS
06/17/2014

REVISIONS								SHEET NO.
NO.	BY:	DATE:		NO.	BY:	DATE:		S-03
1				3				TOTAL SHEETS
2				4				

ASSEMBLED BY : REZA KOUCHEKI DATE : 10/16/13
CHECKED BY : MD PISO DATE : 11/19/13

DRAWN BY : CVC 6/10
CHECKED BY : DNS 6/10

17-JUN-2014 10:00
S:\DPG1\Tim\Division 1 LIBR\BD-510IM\GK\BD-510IM_SD_CS.dgn
tcoggins

STD. NO. 24LRFR1_60&120S_60L

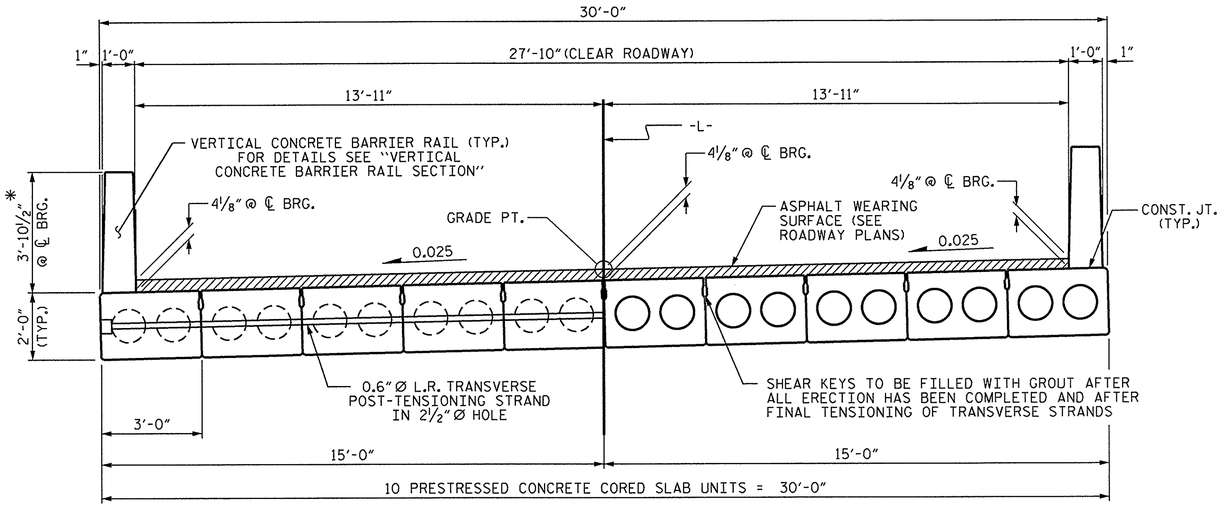

HALF SECTION
AT INTERMEDIATE DIAPHRAGMS

TYPICAL SECTION

HALF SECTION
THROUGH VOIDS

* - THE MAXIMUM BARRIER RAIL HEIGHT AND ASPHALT THICKNESS IS SHOWN. THE HEIGHT OF THE BARRIER RAIL AND ASPHALT THICKNESS VARIES WHILE THE TOP OF THE BARRIER RAIL FOLLOWS THE PROFILE OF THE GUTTERLINE. FOR RAIL HEIGHT DETAILS AND ASPHALT THICKNESS, SEE THE "VERTICAL CONCRETE BARRIER RAIL SECTION" DETAIL.

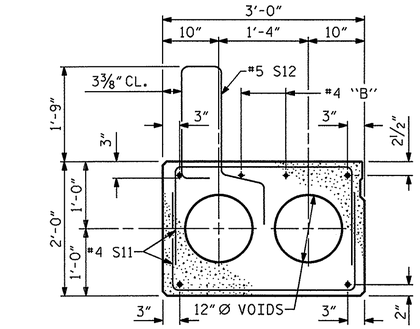

EXTERIOR SLAB SECTION

(FOR PRESTRESSED STRAND LAYOUT, SEE INTERIOR SLAB SECTION.)

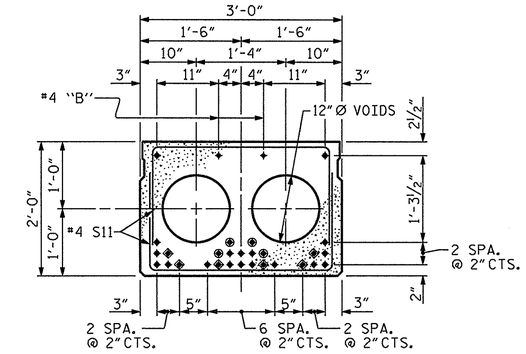

INTERIOR SLAB SECTION (60' UNIT)

(24 STRANDS REQUIRED)

0.6" Ø LOW RELAXATION STRAND LAYOUT

◈ BOND SHALL BE BROKEN ON THESE STRANDS FOR A DISTANCE OF 12'-0" FROM END OF CORED SLAB UNIT. SEE STANDARD SPECIFICATIONS, ARTICLE 1078-7.

◉ OPTIONAL FULL LENGTH DEBONDED STRANDS. THESE STRANDS ARE NOT REQUIRED. IF THE FABRICATOR CHOOSES TO INCLUDE THESE STRANDS IN THE CORED SLAB UNIT, THE STRANDS SHALL BE DEBONDED FOR THE FULL LENGTH OF THE UNIT AT NO ADDITIONAL COST. SEE STANDARD SPECIFICATIONS, ARTICLE 1078-7.

DEBONDING LEGEND

FIXED END

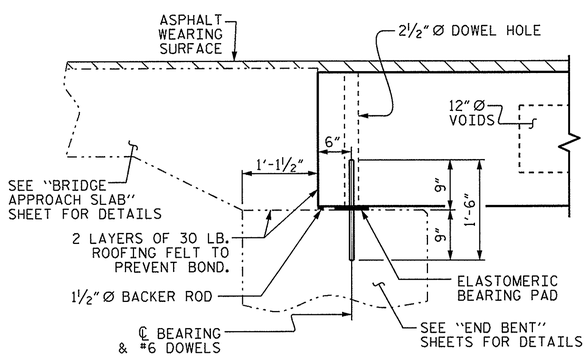

SECTION AT END BENT

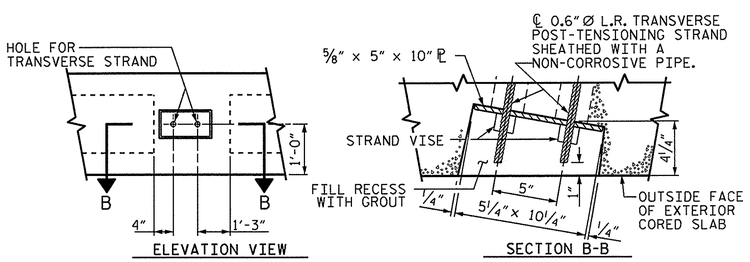

GROUTED RECESS AT END OF POST-TENSIONED STRAND-CORED SLABS

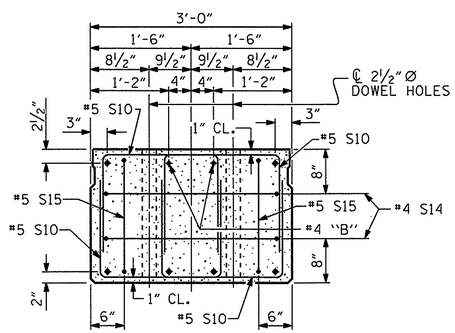

END ELEVATION

SHOWING PLACEMENT OF DOUBLE STIRRUPS AND LOCATION OF DOWEL HOLES. (STRAND LAYOUT NOT SHOWN.) INTERIOR SLAB UNIT SHOWN-EXTERIOR SLAB UNIT SIMILAR EXCEPT SHEAR KEY LOCATION.

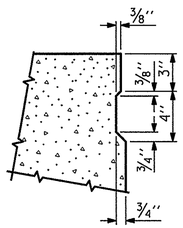

SHEAR KEY DETAIL

NOTE: OMIT SHEAR KEY ON OUTSIDE FACE OF EXTERIOR CORED SLABS.

NORTH CAROLINA PROFESSIONAL SEAL 14045 ENGINEER TIMOTHY K. COGGINS
06/17/2014

PROJECT NO. 17BP.1.R.72
PASQUOTANK COUNTY
STATION: 13+00.00 -L-

SHEET 1 OF 3

STATE OF NORTH CAROLINA
DEPARTMENT OF TRANSPORTATION
RALEIGH

STANDARD

3'-0" X 2'-0"
PRESTRESSED CONCRETE
CORED SLAB UNIT

REVISIONS						SHEET NO.
NO.	BY:	DATE:	NO.	BY:	DATE:	S-04
1			3			TOTAL SHEETS
2			4			

ASSEMBLED BY : REZA KOUCHEKI		DATE : 10/16/13	
CHECKED BY : MD PISO		DATE : 11/19/13	
DRAWN BY : MAA	6/10	REV. 12/11	MAA/AAC
CHECKED BY : MKT	7/10		

STD. NO. 24PCS4_30_120S

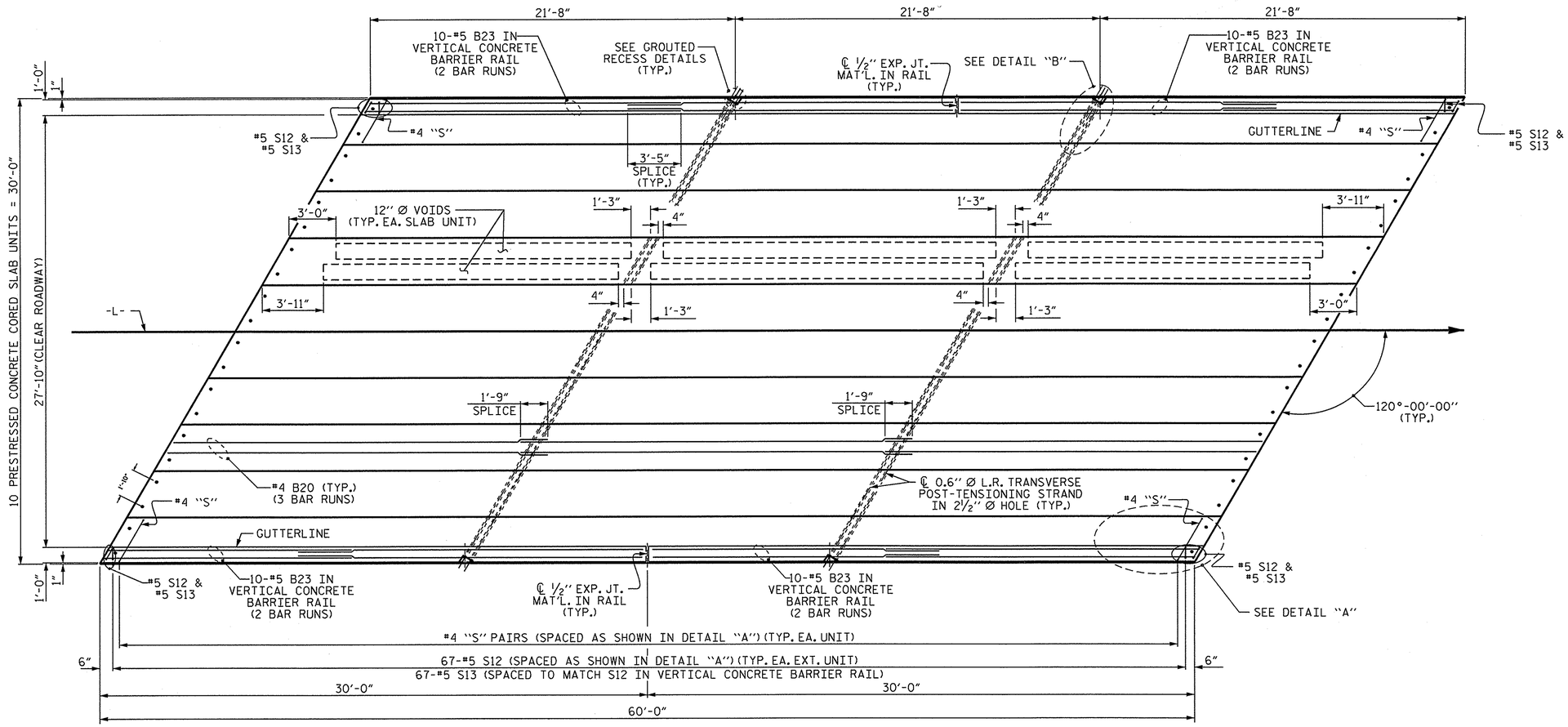

PLAN OF UNIT

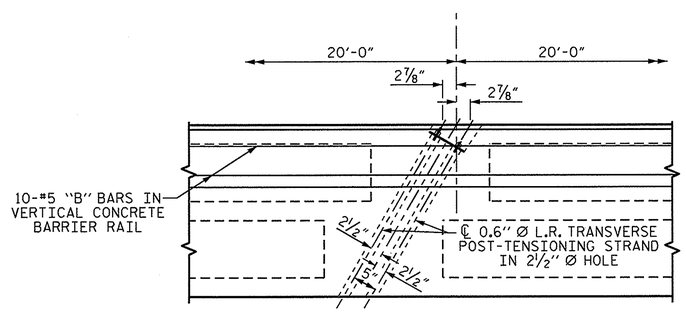

DETAIL "B"

#4 S11 BARS MAY BE SHIFTED AS NECESSARY TO MAINTAIN 1" CLEAR TO GROUTED RECESS AND 2 1/2" Ø TRANSVERSE POST-TENSIONING STRAND HOLES

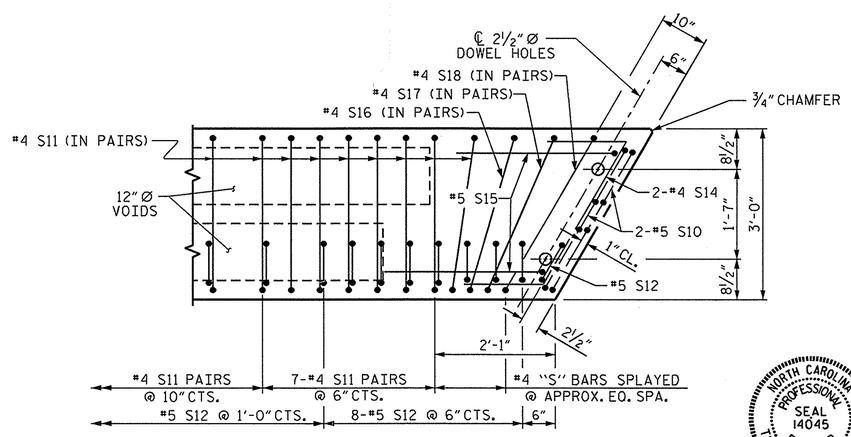

DETAIL "A"

NOTE: EXTERIOR UNIT SHOWN - INTERIOR UNIT SIMILAR EXCEPT OMIT #5 S12 BARS.

NORTH CAROLINA PROFESSIONAL SEAL 14045 ENGINEER TIMOTHY W. COGGINS
06/17/2014

PROJECT NO. 17BP.1.R.72
PASQUOTANK COUNTY
STATION: 13+00.00 -L-

SHEET 2 OF 3

STATE OF NORTH CAROLINA
DEPARTMENT OF TRANSPORTATION
RALEIGH

PLAN OF 60' UNIT 27'-10" CLEAR ROADWAY 120° SKEW

REVISIONS							SHEET NO.
NO.	BY:	DATE:	NO.	BY:	DATE:		S-05
1			3				TOTAL SHEETS
2			4				

ASSEMBLED BY : REZA KOUCHEKI	DATE : 10/16/13	
CHECKED BY : MD PISO	DATE : 11/19/13	
DRAWN BY : MAA	6/10	REV. 12/5/11 MAA/AAC
CHECKED BY : MKT	7/10	

17-JUN-2014 09:59
S:\DPG1\Tim\Division 1 LIBR\BD-5101M\GK\BD-5101M_SD_CS.dgn
tcoggins

STD. NO. 24PCS_30_120S_60L

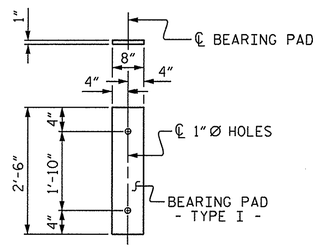

FIXED END
(TYPE I - 20 REQ'D)

ELASTOMERIC BEARING DETAILS

ELASTOMER IN ALL BEARINGS SHALL BE 60 DUROMETER HARDNESS.

BILL OF MATERIAL FOR VERTICAL CONCRETE BARRIER RAIL

BAR	BARS PER PAIR OF EXTERIOR UNITS	TOTAL NO.	SIZE	TYPE	LENGTH	WEIGHT
	60' UNIT					
*B23	80	80	#5	STR	16'-11"	1412
*S13	138	138	#5	2	7'-2"	1032
* EPOXY COATED REINFORCING STEEL				LBS.		2444
CLASS AA CONCRETE				CU.YDS.		16.2
TOTAL VERTICAL CONCRETE BARRIER RAIL				LN. FT.		120.00

BILL OF MATERIAL FOR ONE 60' CORED SLAB UNIT

BAR	NUMBER	SIZE	TYPE	EXTERIOR UNIT LENGTH	EXTERIOR UNIT WEIGHT	INTERIOR UNIT LENGTH	INTERIOR UNIT WEIGHT
B20	6	#4	STR	21'-2"	85	21'-2"	85
S10	8	#5	3	5'-0"	42	5'-0"	42
S11	146	#4	3	5'-10"	569	5'-10"	569
*S12	69	#5	1	6'-4"	456		
S14	4	#4	4	5'-11"	16	5'-11"	16
S15	4	#5	3	7'-1"	30	7'-1"	30
S16	4	#4	3	5'-11"	16	5'-11"	16
S17	4	#4	3	6'-1"	16	6'-1"	16
S18	4	#4	3	6'-3"	17	6'-3"	17
REINFORCING STEEL			LBS.		791		791
* EPOXY COATED REINFORCING STEEL			LBS.		456		
6000 P.S.I. CONCRETE			CU. YDS.		10.4		10.4
0.6"Ø L.R. STRANDS			No.		24		24

BAR TYPES

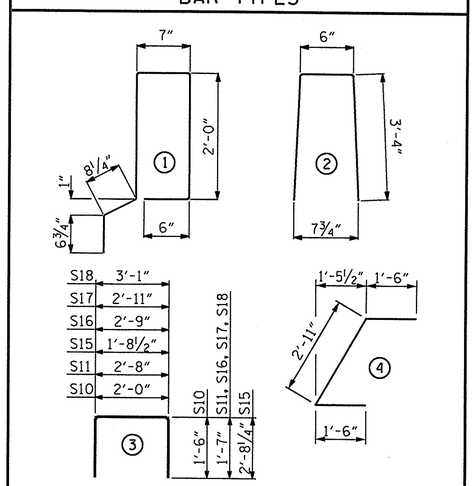

ALL BAR DIMENSIONS ARE OUT TO OUT

NOTES

ALL PRESTRESSING STRANDS SHALL BE 7-WIRE LOW RELAXATION GRADE 270 STRANDS AND SHALL CONFORM TO AASHTO M203 EXCEPT FOR SAMPLING REQUIREMENTS WHICH SHALL BE IN ACCORDANCE WITH THE STANDARD SPECIFICATIONS.

ALL REINFORCING STEEL CAST WITH THE CORED SLAB SECTIONS SHALL BE GRADE 60 AND SHALL BE INCLUDED IN THE UNIT PRICE BID FOR PRESTRESSED CONCRETE CORED SLABS.

RECESSES FOR TRANSVERSE STRANDS SHALL BE GROUTED AFTER THE TENSIONING OF THE STRANDS.

THE 2½"Ø DOWEL HOLES AT FIXED ENDS OF SLAB SECTIONS SHALL BE FILLED WITH NON-SHRINK GROUT.

THE BACKER RODS SHALL CONFORM TO THE REQUIREMENTS OF TYPE M BOND BREAKER. SEE SECTION 1028 OF THE STANDARD SPECIFICATIONS.

WHEN CORED SLABS ARE CAST, AN INTERNAL HOLD-DOWN SYSTEM SHALL BE EMPLOYED TO PREVENT VOIDS FROM RISING OR MOVING SIDEWAYS. AT LEAST SIX WEEKS PRIOR TO CASTING CORED SLABS, THE CONTRACTOR SHALL SUBMIT TO THE ENGINEER FOR REVIEW AND COMMENT, DETAILED DRAWINGS OF THE PROPOSED HOLD-DOWN SYSTEM. IN ADDITION TO STRUCTURAL DETAILS, LOCATION AND SPACING OF THE HOLD-DOWNS SHALL BE INDICATED.

THE TRANSFER OF LOAD FROM THE ANCHORAGES TO THE CORED SLAB UNIT SHALL BE DONE WHEN THE CONCRETE HAS REACHED A COMPRESSIVE STRENGTH OF NOT LESS THAN THE REQUIRED STRENGTH SHOWN IN THE "CONCRETE RELEASE STRENGTH" TABLE.

ALL REINFORCING STEEL IN VERTICAL CONCRETE BARRIER RAILS SHALL BE EPOXY COATED.

PRESTRESSING STRANDS SHALL BE CUT FLUSH WITH THE CORED SLAB UNIT ENDS.

APPLY EPOXY PROTECTIVE COATING TO CORED SLAB UNIT ENDS.

GROOVED CONTRACTION JOINTS, ½" IN DEPTH, SHALL BE TOOLED IN ALL EXPOSED FACES OF THE BARRIER RAIL AND IN ACCORDANCE WITH ARTICLE 825-10(B) OF THE STANDARD SPECIFICATIONS. A CONTRACTION JOINT SHALL BE LOCATED AT EACH THIRD POINT BETWEEN BARRIER RAIL EXPANSION JOINTS. ONLY ONE CONTRACTION JOINT IS REQUIRED AT MIDPOINT OF BARRIER RAIL SEGMENTS LESS THAN 20 FEET IN LENGTH AND NO CONTRACTION JOINTS ARE REQUIRED FOR THOSE SEGMENTS LESS THAN 10 FEET IN LENGTH.

TRANSVERSE POST TENSIONING OF THE CORED SLAB UNITS SHALL BE DONE IN ACCORDANCE WITH THE STANDARD SPECIFICATIONS.

MAINTAIN A SYMMETRIC TENSION FORCE BETWEEN EACH PAIR OF TRANSVERSE POST TENSIONING STRANDS IN THE DIAPHRAGM.

THE #4 S11 STIRRUPS MAY BE SHIFTED AS NECESSARY TO MAINTAIN 1" CLEAR TO THE GROUTED RECESS.

FOR GROUT FOR STRUCTURES, SEE SPECIAL PROVISIONS.

CORED SLABS REQUIRED

	NUMBER	LENGTH	TOTAL LENGTH
60' UNIT			
EXTERIOR C.S.	2	60'-0"	120'-0"
INTERIOR C.S.	8	60'-0"	480'-0"
TOTAL	10	60'-0"	600'-0"

DEAD LOAD DEFLECTION AND CAMBER

	3'-0" x 2'-0"
60' CORED SLAB UNIT	0.6"Ø L.R. STRAND
CAMBER (SLAB ALONE IN PLACE)	3⅜" ↑
DEFLECTION DUE TO SUPERIMPOSED DEAD LOAD**	½" ↓
FINAL CAMBER	2⅞" ↑

** INCLUDES FUTURE WEARING SURFACE

*PAVEMENT ALONG TRANSVERSE CENTERLINE OF ALL CAPS SHALL BE SAW CUT TO A DEPTH OF 3/4", CLEANED, AND FILLED WITH AN APPROVED ASPHALT SEALANT, IN ACCORDANCE WITH SECTION 1028 OF THE STANDARD SPECIFICATIONS.

CONCRETE RELEASE STRENGTH

UNIT	PSI
60' UNITS	4800

*APPLY AN APPROVED EPOXY PROTECTIVE COATING TO THE TOPS OF ALL CAPS AND TO THE EXTERIOR FACES OF ALL EXTERIOR CORE SLAB UNITS.

GUTTERLINE ASPHALT THICKNESS & RAIL HEIGHT

30' SUPER ELEV	ASPHALT OVERLAY THICKNESS @ MID-SPAN	RAIL HEIGHT @ MID-SPAN
60' UNITS	1¼"	3'-7⅝"

GRADE 270 STRANDS

	0.6"Ø L.R.
AREA (SQUARE INCHES)	0.217
ULTIMATE STRENGTH (LBS. PER STRAND)	58,600
APPLIED PRESTRESS (LBS. PER STRAND)	43,950

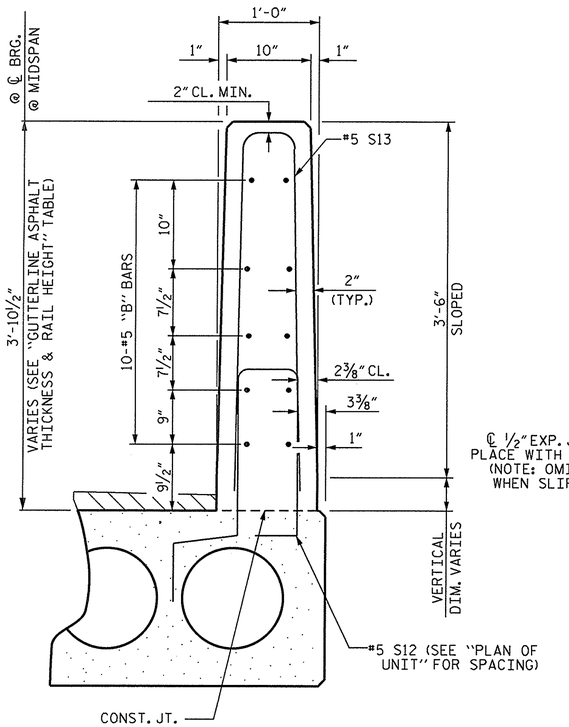

SECTION THRU RAIL

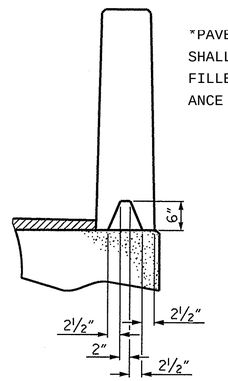

SECTION S-S
AT DAM IN OPEN JOINT
(THIS IS TO BE USED ONLY WHEN SLIP FORM IS USED)

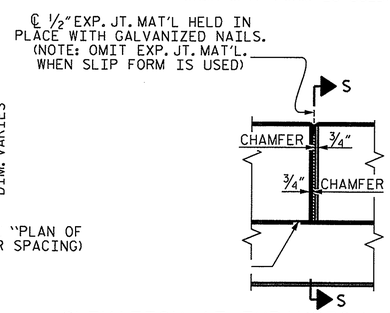

ELEVATION AT EXPANSION JOINTS

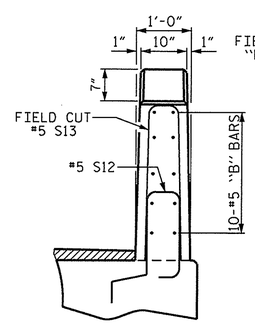

END VIEW

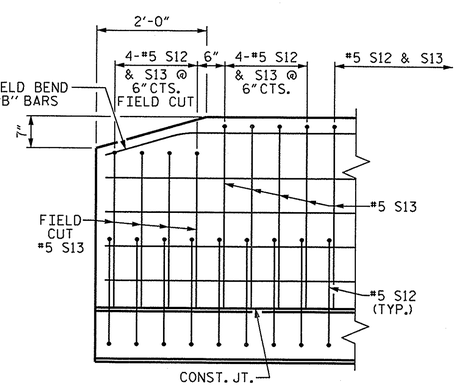

SIDE VIEW

VERTICAL CONCRETE BARRIER RAIL DETAILS

END OF RAIL DETAILS

PROJECT NO. 17BP.1.R.72
PASQUOTANK COUNTY
STATION: 13+00.00 -L-

SHEET 3 OF 3

STATE OF NORTH CAROLINA
DEPARTMENT OF TRANSPORTATION
RALEIGH

STANDARD
3'-0" X 2'-0"
PRESTRESSED CONCRETE
CORED SLAB UNIT

NORTH CAROLINA PROFESSIONAL SEAL 14045 ENGINEER TIMOTHY W. COGGINS
06/17/2014

REVISIONS						SHEET NO.
NO.	BY:	DATE:	NO.	BY:	DATE:	S-06
1			3			TOTAL SHEETS
2			4			

ASSEMBLED BY : REZA KOUCHEKI		DATE : 10/16/13	
CHECKED BY : MD PISO		DATE : 11/19/13	
DRAWN BY : MAA	6/10	REV. 12/11	MAA/AAC
CHECKED BY : MKT	7/10		

17-JUN-2014 09:58
S:\DPG1\Tim\Division 1 LIBR\BD-5101M\GK\BD-5101M_SD_CS.dgn
tcoggins

STD. NO. 24PCS3_30_60&120S

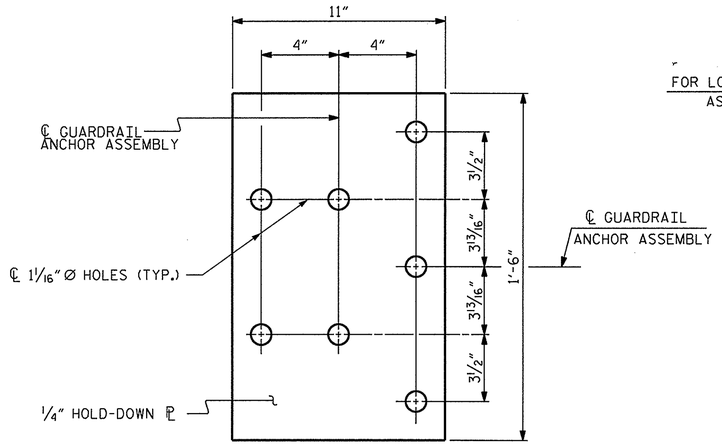

PLAN

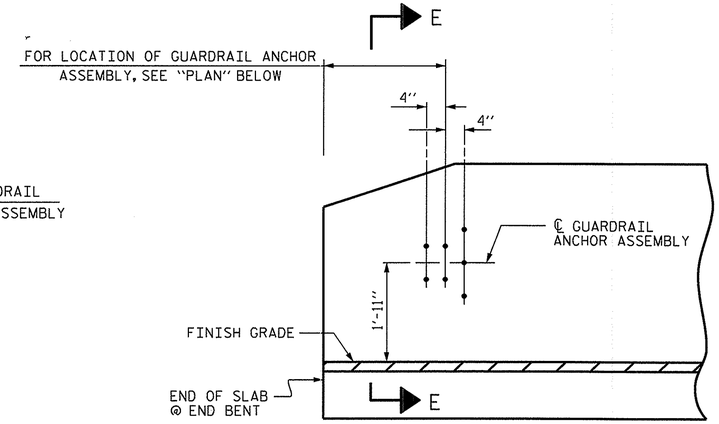

ELEVATION

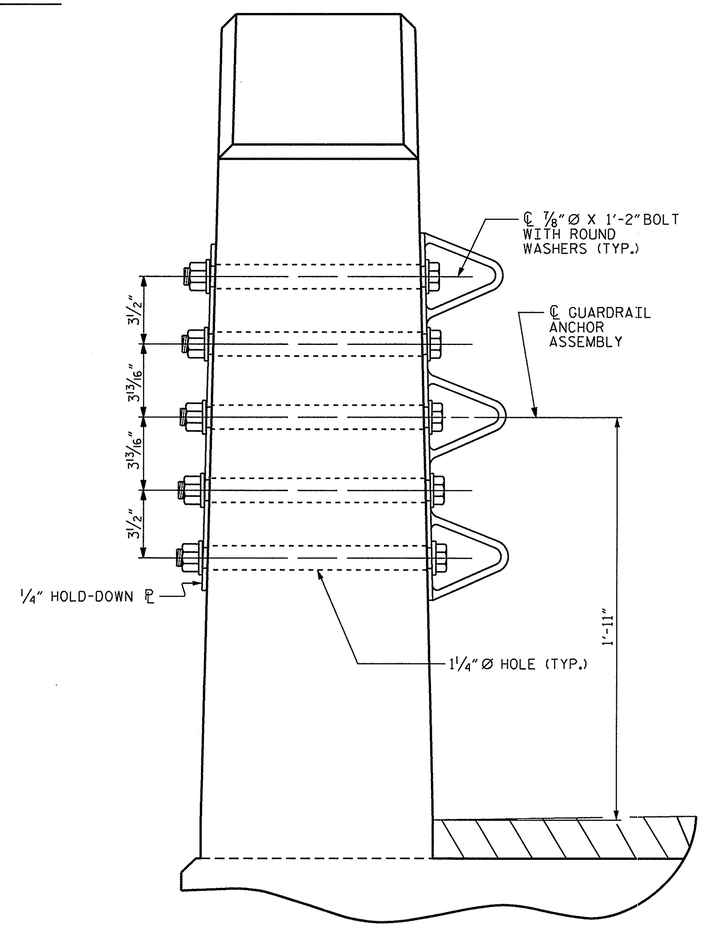

SECTION E-E

GUARDRAIL ANCHOR ASSEMBLY DETAILS

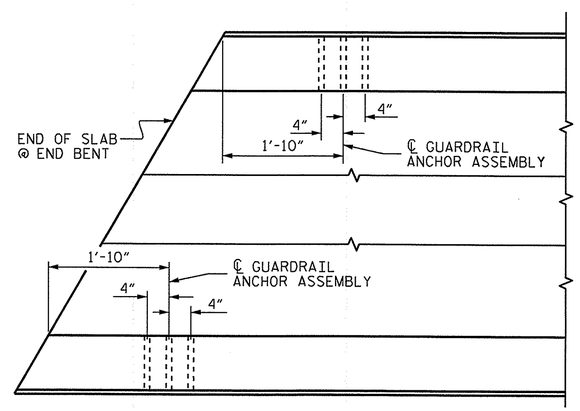

PLAN

LOCATION OF ANCHORS FOR GUARDRAIL

END BENT 1 SHOWN, END BENT 2 SIMILAR.

NOTES

THE GUARDRAIL ANCHOR ASSEMBLY SHALL CONSIST OF A 1/4" HOLD DOWN PLATE AND 7 - 7/8" Ø BOLTS WITH NUTS AND WASHERS.

THE HOLD-DOWN PLATE SHALL CONFORM TO AASHTO M270 GRADE 36. AFTER FABRICATION, THE HOLD-DOWN PLATE SHALL BE HOT-DIP GALVANIZED IN ACCORDANCE WITH AASHTO M111.

BOLTS SHALL CONFORM TO THE REQUIREMENTS OF ASTM A307 AND NUTS SHALL CONFORM TO THE REQUIREMENTS OF AASHTO M291. BOLTS, NUTS AND WASHERS SHALL BE GALVANIZED. (AT THE CONTRACTOR'S OPTION, STAINLESS STEEL BOLTS, NUTS AND WASHERS MAY BE USED AS AN ALTERNATE FOR THE 7/8" Ø GALVANIZED BOLTS, NUTS AND WASHERS. THEY SHALL CONFORM TO OR EXCEED THE MECHANICAL REQUIREMENTS OF ASTM A307. THE USE OF THIS ALTERNATE SHALL BE APPROVED BY THE ENGINEER.)

THE GUARDRAIL ANCHOR ASSEMBLY IS REQUIRED AT ALL POINTS WHERE APPROACH GUARDRAIL IS TO BE ATTACHED TO THE END OF BARRIER RAIL. FOR POINTS OF ATTACHMENT, SEE SKETCH.

AFTER INSTALLATION, THE EXPOSED THREAD OF THE BOLT SHALL BE BURRED WITH A SHARP POINTED TOOL.

THE COST OF THE GUARDRAIL ANCHOR ASSEMBLY SHALL BE INCLUDED IN THE UNIT CONTRACT PRICE BID FOR VERTICAL CONCRETE BARRIER RAIL.

THE VERTICAL REINFORCING BARS MAY BE SHIFTED SLIGHTLY IN THE VERTICAL CONCRETE BARRIER RAIL TO CLEAR ASSEMBLY BOLTS.

THE 1 1/4" Ø HOLES SHALL BE FORMED OR DRILLED WITH A CORE BIT. IMPACT TOOLS WILL NOT BE PERMITTED. ANY CONCRETE DAMAGED BY THIS WORK SHALL BE REPAIRED TO THE SATISFACTION OF THE ENGINEER.

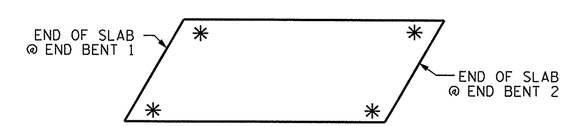

SKETCH SHOWING POINTS OF ATTACHMENT

✳ DENOTES GUARDRAIL ANCHOR ASSEMBLY

PROJECT NO. 17BP.1.R.72

PASQUOTANK COUNTY

STATION: 13+00.00 -L-

STATE OF NORTH CAROLINA
DEPARTMENT OF TRANSPORTATION
RALEIGH

STANDARD
GUARDRAIL ANCHORAGE FOR VERTICAL CONCRETE BARRIER RAIL

NORTH CAROLINA PROFESSIONAL SEAL 14045 ENGINEER TIMOTHY W. COGGINS
06/17/2014

REVISIONS						SHEET NO.
NO.	BY:	DATE:	NO.	BY:	DATE:	S-07
1			3			TOTAL SHEETS
2			4			

STD. NO. GRA3

ASSEMBLED BY : REZA KOUCHEKI		DATE : 10/15/13	
CHECKED BY : MD PISO		DATE : 11/19/13	
DRAWN BY : MAA 5/10	REV. 10/1/11	MAA/GM	
CHECKED BY : GM 5/10	REV. 12/5/11	MAA/GM	
	REV. 6/13	MAA/GM	

17-JUN-2014 09:58
S:\DPG1\Tlm\Division 1 LIBR\BD-5101M\GK\BD-5101M_SD_CS.dgn
tcoggins

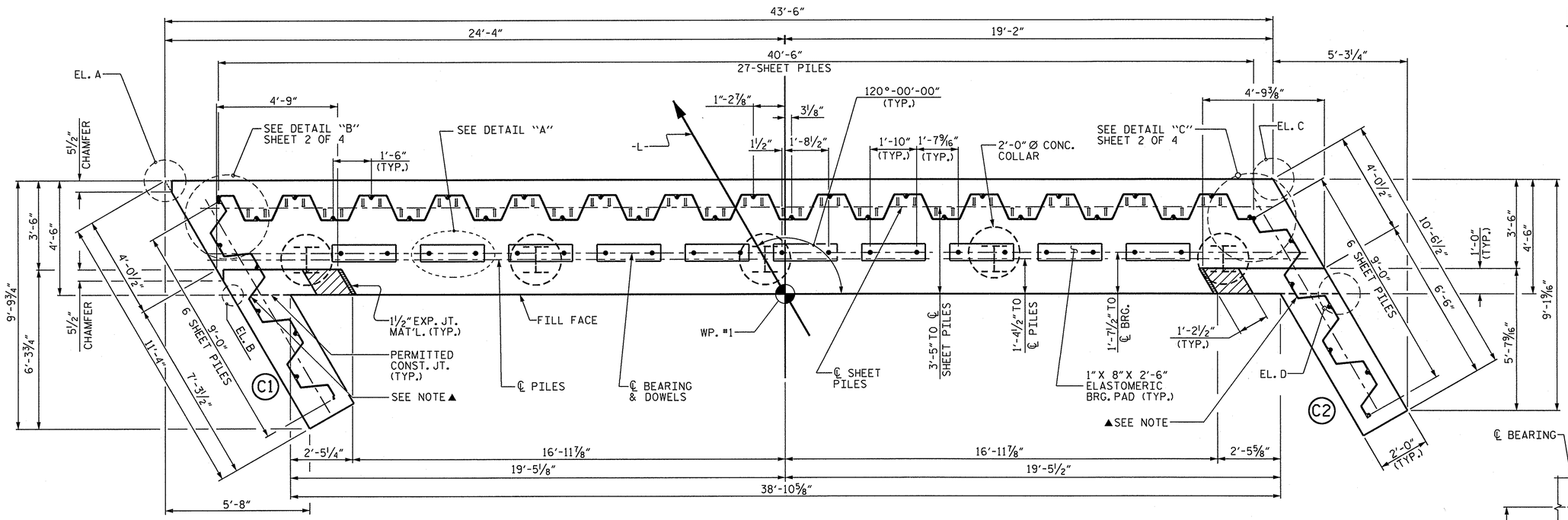

PLAN

TOP OF CAP ELEVATIONS	
POINT	EL.
Ⓐ	12.08
Ⓑ	12.13
Ⓒ	12.88
Ⓓ	12.92

▲ FOR THIS SHEET:
TOP OF SHEET PILE ELEVATION = 14.44 @ C1
AND 15.02 @ C2
BOTTOM OF SHEET PILE = -17.5
TRIM BACK TO 6"FROM THE FILL FACE
AND DOWN TO THE PREVIOUS SHEET PILE
IN CAP.

NOTES:

STIRRUPS IN CAP MAY BE SHIFTED AS NECESSARY TO CLEAR DOWELS.

FOR PILE SPLICE DETAILS, SEE END BENT SHEET 4 OF 4.

THE CONCRETE IN THE SHADED AREA OF THE WING SHALL BE POURED AFTER THE BARRIER RAIL IS CAST IF SLIP FORMING IS USED.

INSTALL THE 4"DIA. DRAIN PIPE THROUGH THE SHEET PILES AS REQUIRED FOR REINFORCED BRIDGE APPROACH SLABS. SEE ROADWAY PLANS.

FOR ANCHOR STUD DETAIL AND LOCATION, SEE END BENT #1 SHEET 2 OF 4.

FOR ELEVATION VIEW OF SHEET PILING, SEE END BENT #1 SHEET 2 OF 4.

THE STEEL SHEET PILING SHALL HAVE A MINIMUM SECTION MODULUS OF 18.1 IN.³/FT.

STEEL SHEET PILES SHALL BE GALVINIZED. FOR STEEL SHEET PILES, SEE SPECIAL PROVISIONS.

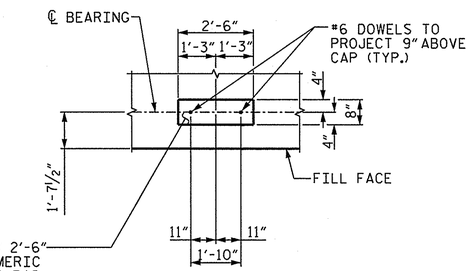

DETAIL "A"

DIMENSIONS FOR EACH BEARING PAD ARE TYPICAL FOR EACH CORED SLAB UNIT.

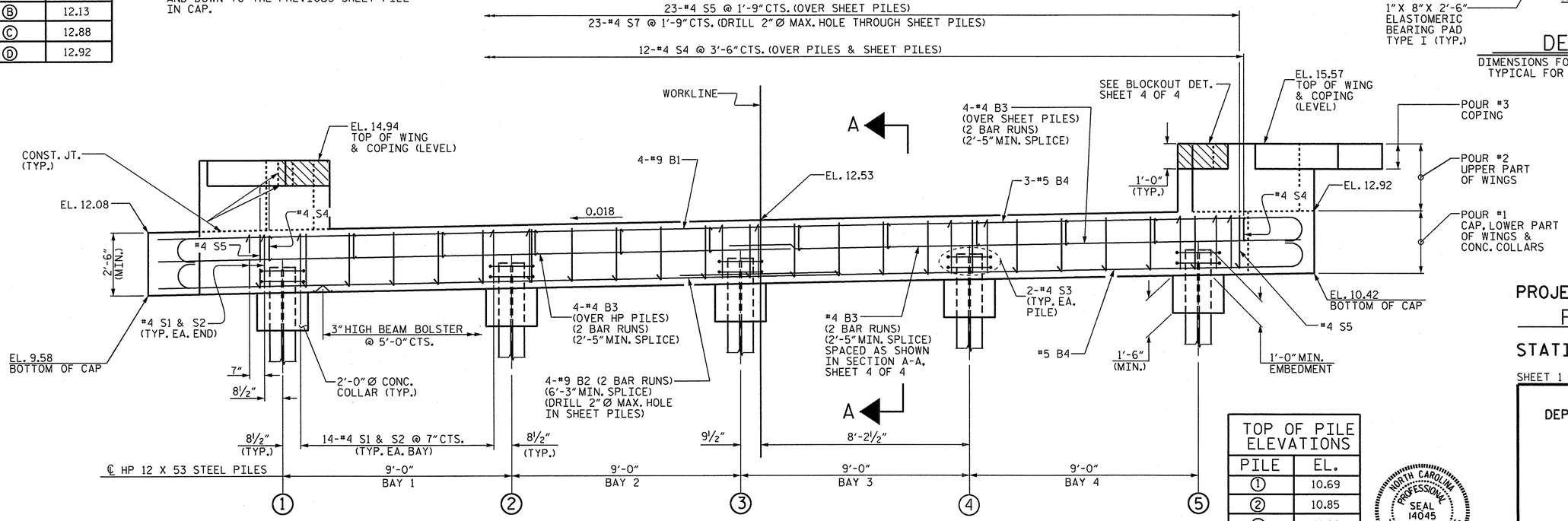

ELEVATION

SHEET PILING NOT SHOWN FOR CLARITY

TOP OF PILE ELEVATIONS	
PILE	EL.
①	10.69
②	10.85
③	11.02
④	11.18
⑤	11.35

NORTH CAROLINA PROFESSIONAL SEAL 14045 ENGINEER TIMOTHY W. COGGINS
06/17/2014

PROJECT NO. 17BP.1.R.72
PASQUOTANK COUNTY
STATION: 13+00.00 -L-

SHEET 1 OF 4

STATE OF NORTH CAROLINA
DEPARTMENT OF TRANSPORTATION
RALEIGH

SUBSTRUCTURE

END BENT NO. 1

REVISIONS						SHEET NO.
NO.	BY:	DATE:	NO.	BY:	DATE:	S-08
1			3			TOTAL SHEETS
2			4			

DRAWN BY :	M.D.PISO	DATE :	12-02-13
CHECKED BY :	N.M.RUFFIN	DATE :	04-16-14
DESIGN ENGINEER OF RECORD:	N.M.RUFFIN	DATE :	05-07-14

17-JUN-2014 10:49
S:\DPG1\Tim\Division 1 LIBR\BD-5101M\piso\BD-5101M_SD_EB#1.dgn
tcoggins

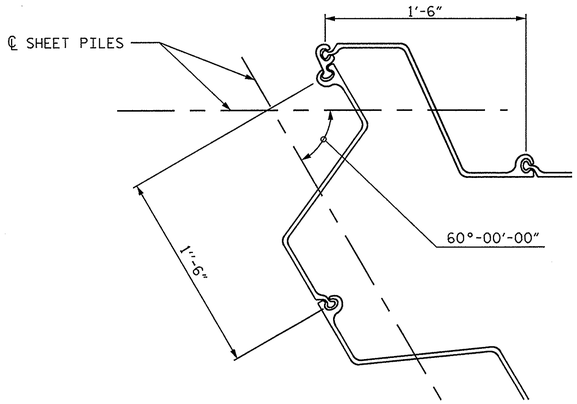

DETAIL "B"

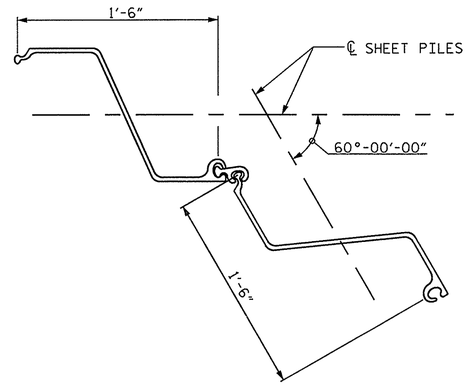

DETAIL "C"

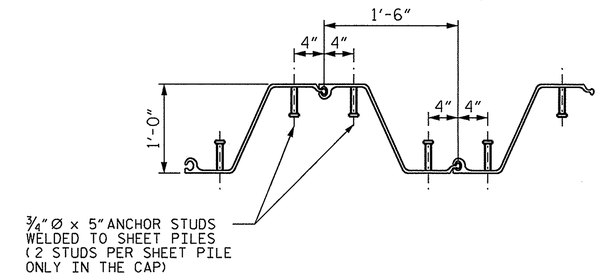

ANCHOR STUD DETAILS

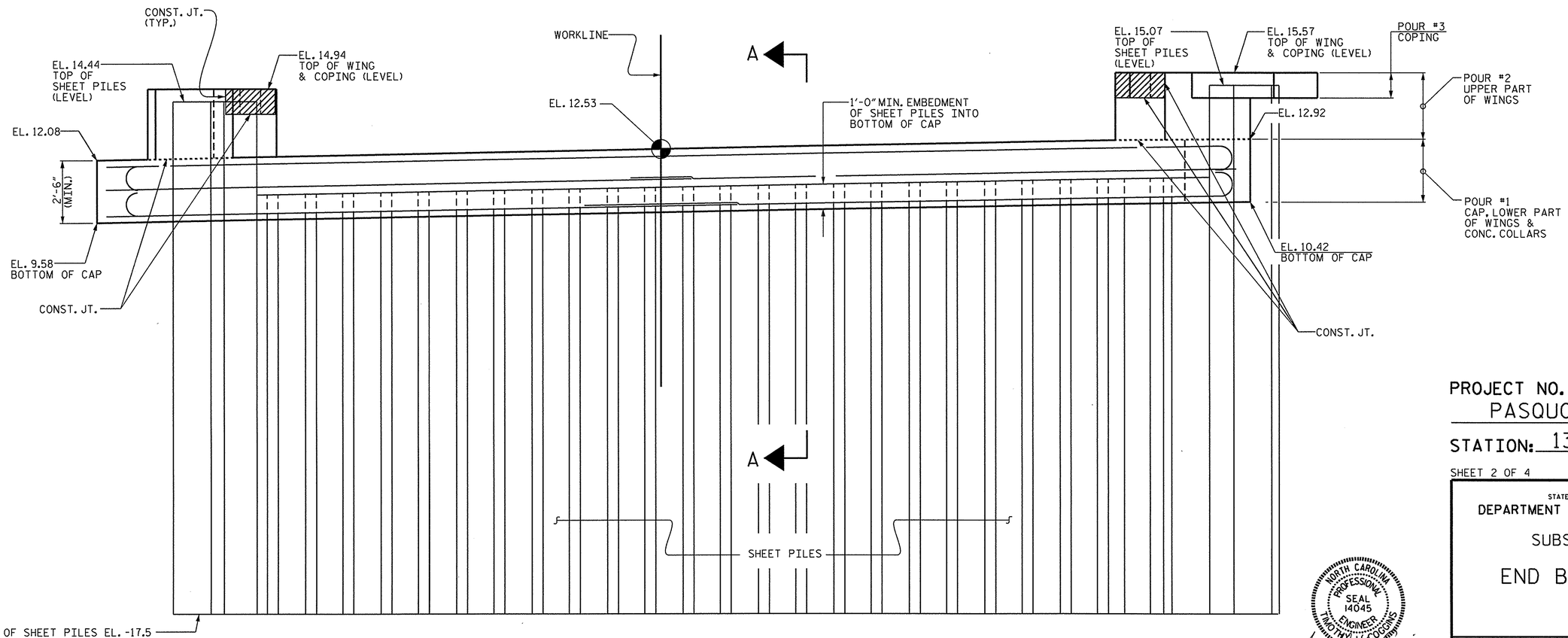

ELEVATION

HP PILES NOT SHOWN FOR CLARITY

NORTH CAROLINA PROFESSIONAL SEAL 14045 ENGINEER TIMOTHY L. COGGINS

06/17/2014

PROJECT NO. 17BP.1.R.72

PASQUOTANK COUNTY

STATION: 13+00.00 -L-

SHEET 2 OF 4

STATE OF NORTH CAROLINA
DEPARTMENT OF TRANSPORTATION
RALEIGH

SUBSTRUCTURE

END BENT NO. 1

REVISIONS						SHEET NO.
NO.	BY:	DATE:	NO.	BY:	DATE:	S-09
1			3			TOTAL SHEETS
2			4			

DRAWN BY : M.D.PISO DATE : 12-02-13
CHECKED BY : N.M.RUFFIN DATE : 04-16-14
DESIGN ENGINEER OF RECORD: N.M.RUFFIN DATE : 05-07-14

17-JUN-2014 10:49
S:\DPGI\Tim\Division 1 LIBR\BD-5101M\piso\BD-5101M_SD_EB*1.dgn
tcoggins

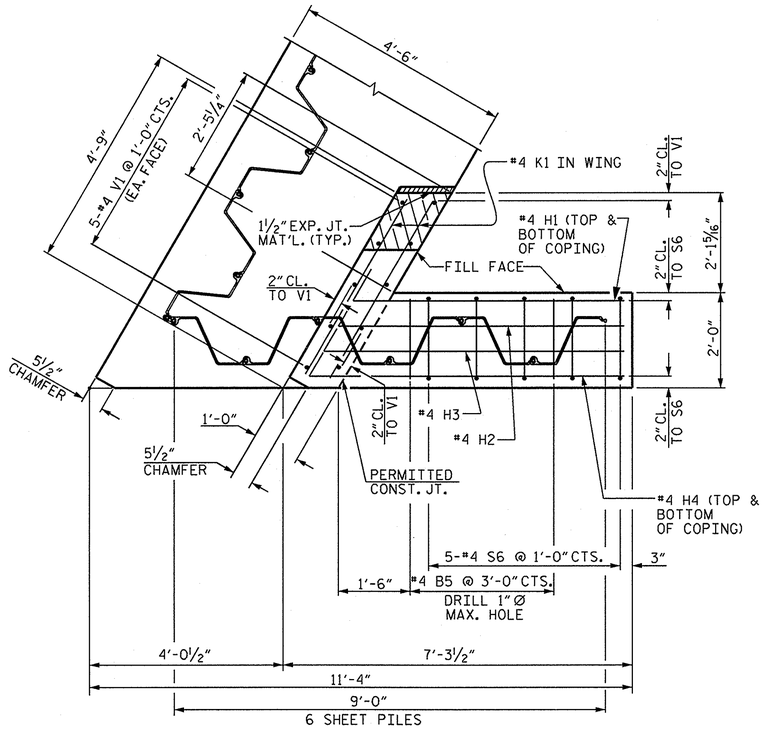

PLAN - COPING (C1)

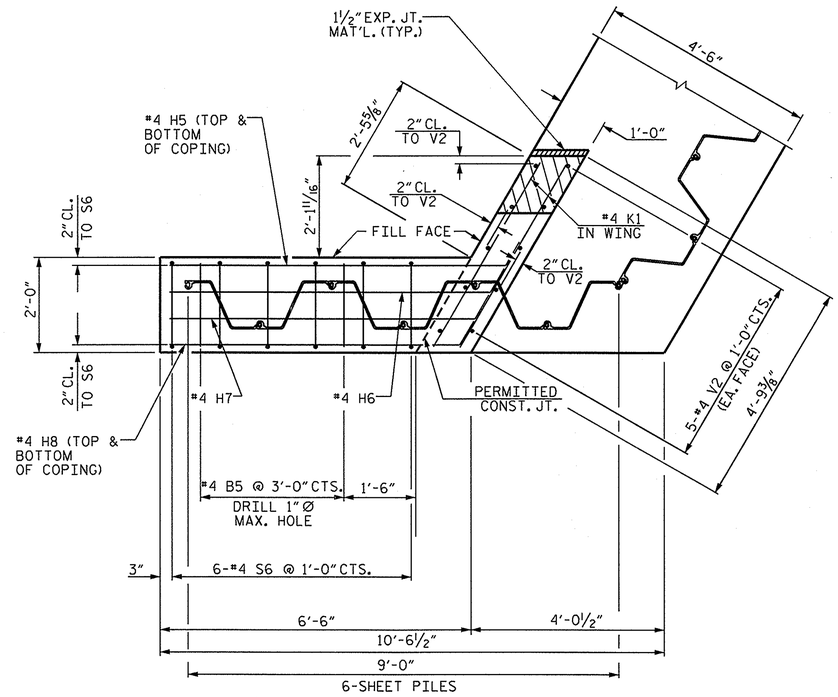

PLAN - COPING (C2)

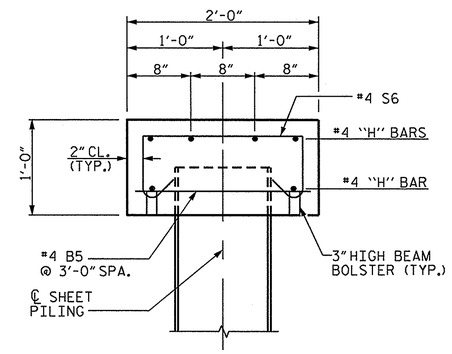

SECTION THRU COPING

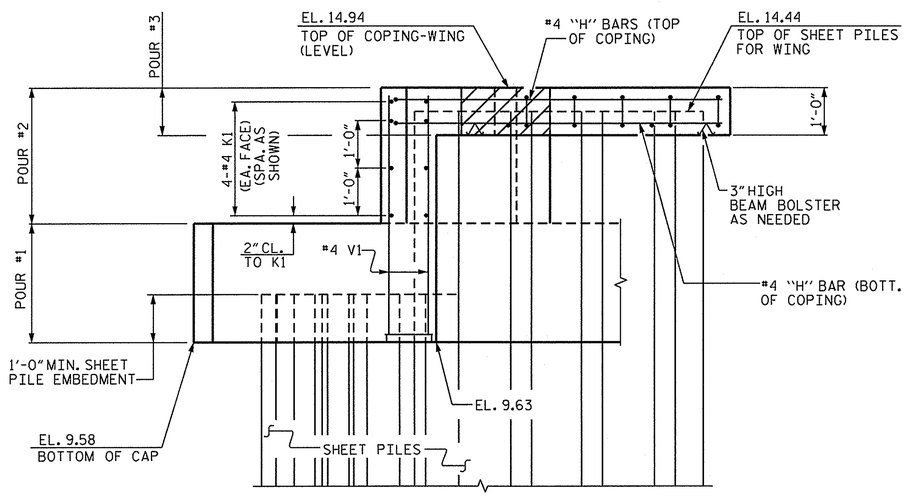

ELEVATION - COPING (C1)

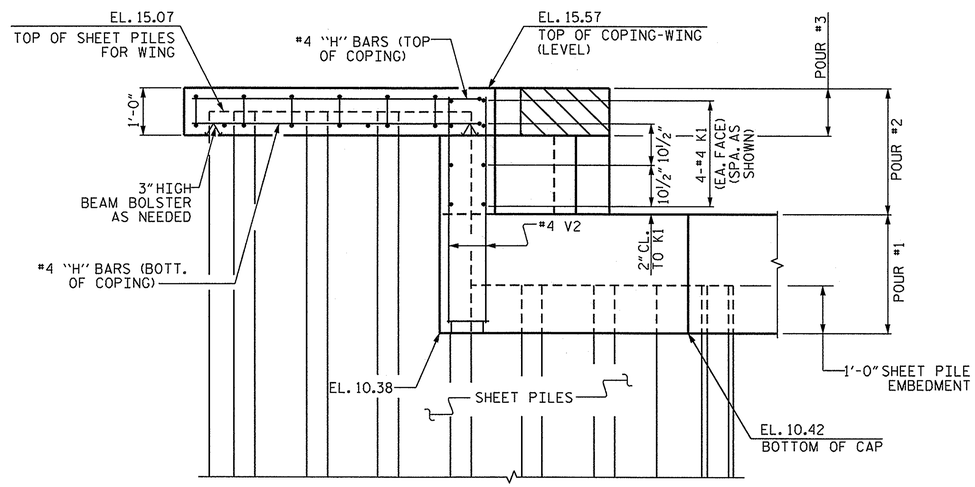

ELEVATION - COPING (C2)

NORTH CAROLINA PROFESSIONAL SEAL 14045 ENGINEER TIMOTHY W. COGGINS

06/17/2014

PROJECT NO. 17BP.1.R.72

PASQUOTANK COUNTY

STATION: 13+00.00 -L-

SHEET 3 OF 4

STATE OF NORTH CAROLINA
DEPARTMENT OF TRANSPORTATION
RALEIGH

SUBSTRUCTURE

END BENT NO. 1

REVISIONS						SHEET NO.
NO.	BY:	DATE:	NO.	BY:	DATE:	S-10
1			3			TOTAL SHEETS
2			4			

DRAWN BY : M.D.PISO DATE : 12-03-13
CHECKED BY : N.M.RUFFIN DATE : 04-16-14
DESIGN ENGINEER OF RECORD: N.M.RUFFIN DATE : 05-07-14

17-JUN-2014 10:49
S:\DPG1\Tim\Division 1 LIBR\BD-5101M\piso\BD-5101M_SD_EB#1.dgn
tcoggins

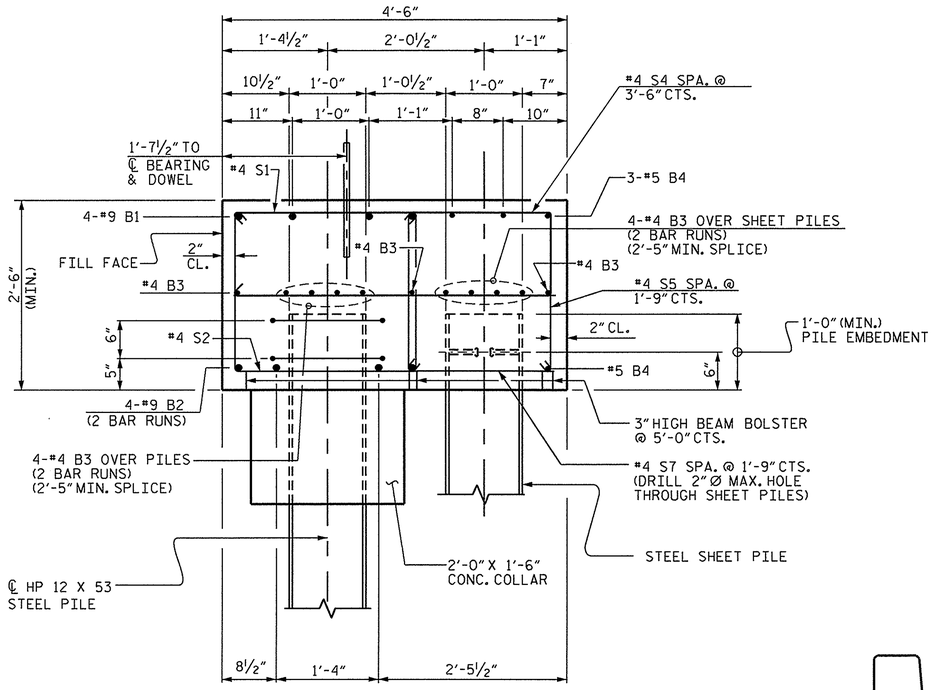

SECTION A - A

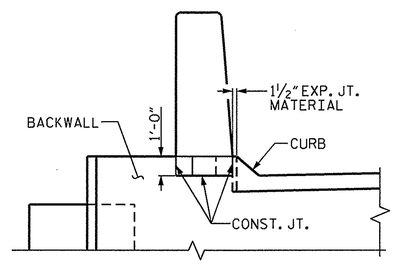

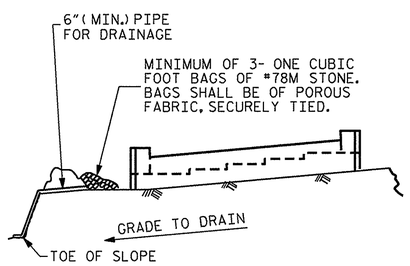

BAGGED STONE AND PIPE SHALL BE PLACED IMMEDIATELY AFTER COMPLETION OF END BENT EXCAVATION. PIPE MAY BE EITHER CONCRETE, CORRUGATED STEEL, CORRUGATED ALUMINUM ALLOY, OR CORRUGATED PLASTIC. PERFORATED PIPE WILL NOT BE ALLOWED.

BAGGED STONE SHALL REMAIN IN PLACE UNTIL THE ENGINEER DIRECTS THAT IT BE REMOVED. THE CONTRACTOR SHALL REMOVE AND DISPOSE OF SILT ACCUMULATIONS AT BAGGED STONE WHEN SO DIRECTED BY THE ENGINEER. BAGS SHALL BE REMOVED AND REPLACED WHENEVER THE ENGINEER DETERMINES THAT THEY HAVE DETERIORATED AND LOST THEIR EFFECTIVENESS.

NO SEPARATE PAYMENT WILL BE MADE FOR THIS WORK AND THE ENTIRE COST OF THIS WORK SHALL BE INCLUDED IN THE UNIT CONTRACT PRICE BID FOR THE SEVERAL PAY ITEMS.

TEMPORARY DRAINAGE AT END BENT

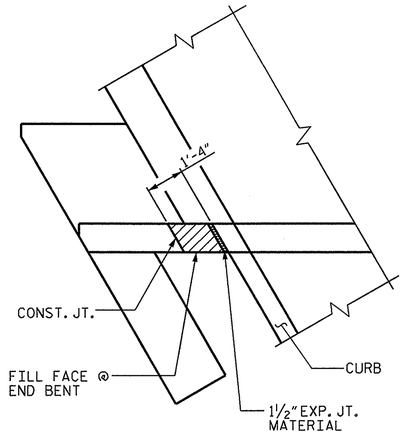

BLOCKOUT IN WING WALL

(WHEN APPROACH SLAB HAS CURB)

BAR TYPES

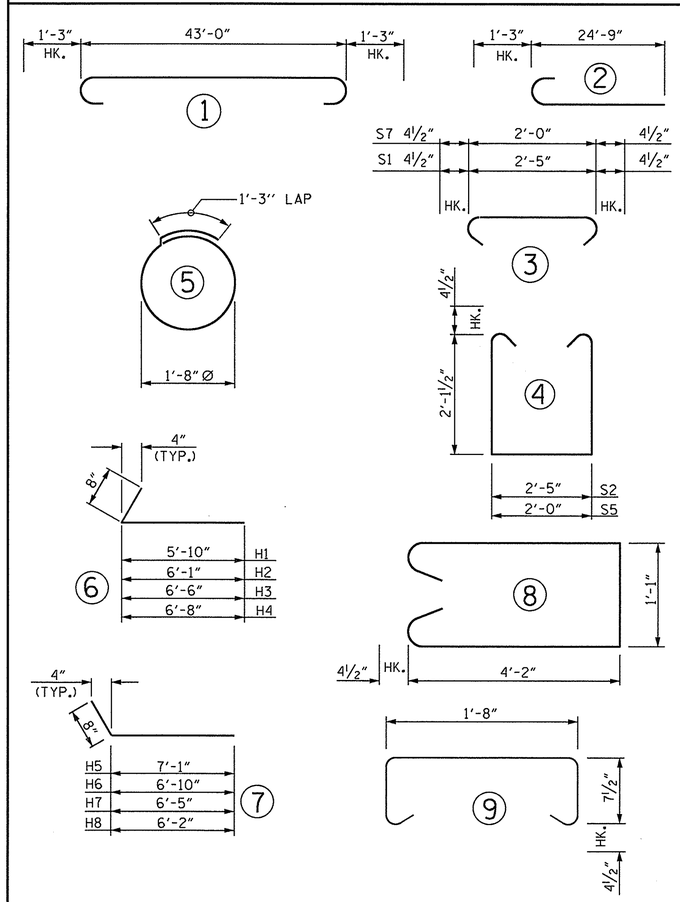

ALL BAR DIMENSIONS ARE OUT TO OUT.

END BENT #1

BILL OF MATERIAL

BAR	NO.	SIZE	TYPE	LENGTH	WEIGHT
B1	4	#9	1	45'-6"	619
B2	8	#9	2	26'-0"	707
B3	22	#4	STR.	22'-10"	336
B4	4	#5	STR.	43'-2"	180
B5	4	#4	STR.	1'-8"	4
D1	20	#6	STR.	1'-6"	45
H1	2	#4	6	6'-6"	9
H2	1	#4	6	6'-9"	5
H3	1	#4	6	7'-2"	5
H4	2	#4	6	7'-4"	10
H5	2	#4	7	7'-9"	10
H6	1	#4	7	7'-6"	5
H7	1	#4	7	7'-1"	5
H8	2	#4	7	6'-10"	9
K1	16	#4	STR.	4'-4"	46
S1	60	#4	3	3'-2"	127
S2	60	#4	4	7'-5"	297
S3	10	#4	5	6'-6"	43
S4	12	#4	8	10'-2"	81
S5	23	#4	4	7'-0"	108
S6	11	#4	9	3'-8"	27
S7	23	#4	3	2'-9"	42
V1	10	#4	STR.	5'-0"	33
V2	10	#4	STR.	4'-10"	32
REINFORCING STEEL					2,785 LBS.

CLASS "A" CONCRETE BREAKDOWN	
POUR #1	
CONC. COLLARS & CAP	19.0 CU. YDS.
POUR #2	
UPPER PART OF WINGS	1.0 CU. YDS.
POUR #3	
COPING	0.9 CU. YDS.
TOTAL	20.9 CU. YDS.
HP 12 X 53 STEEL PILES	
NO. 5	400.0 LIN. FT.
PILE REDRIVES	
EA.	1
STEEL SHEET PILES	
NO. 90 2	
NO. PILES 39	
TOTAL NO. 41	1,837 SQ. FT.

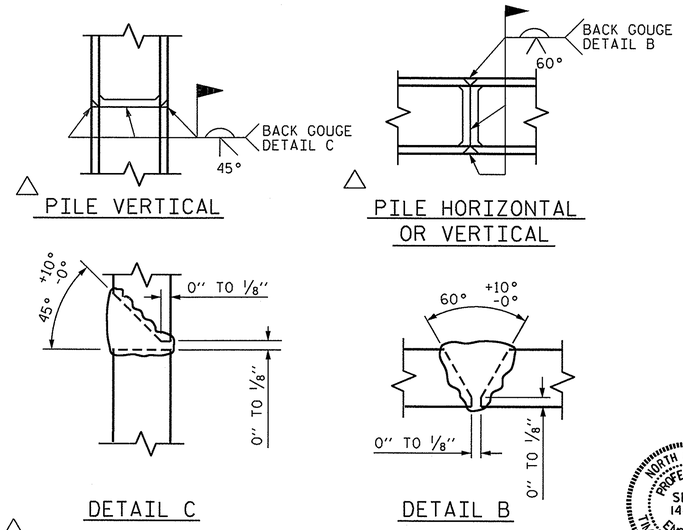

△ PILE VERTICAL

△ PILE HORIZONTAL OR VERTICAL

DETAIL C

DETAIL B

△ POSITION OF PILE DURING WELDING.

PILE SPLICE DETAILS

PROJECT NO. 17BP.1.R.72

PASQUOTANK COUNTY

STATION: 13+00.00 -L-

SHEET 4 OF 4

STATE OF NORTH CAROLINA
DEPARTMENT OF TRANSPORTATION
RALEIGH

SUBSTRUCTURE

END BENT NO. 1

NORTH CAROLINA PROFESSIONAL SEAL 14045 ENGINEER TIMOTHY M. COGGINS
06/17/2014

REVISIONS						SHEET NO.
NO.	BY:	DATE:	NO.	BY:	DATE:	S-11
1			3			TOTAL SHEETS
2			4			

DRAWN BY :	M.D.PISO	DATE :	12-15-13
CHECKED BY :	N.M.RUFFIN	DATE :	04-22-14
DESIGN ENGINEER OF RECORD:	N.M.RUFFIN	DATE :	05-07-14

17-JUN-2014 10:48
S:\DPG1\Tim\Division 1 LIBR\BD-5101M\piso\BD-5101M_SD_EB#1.dgn
tcoggins

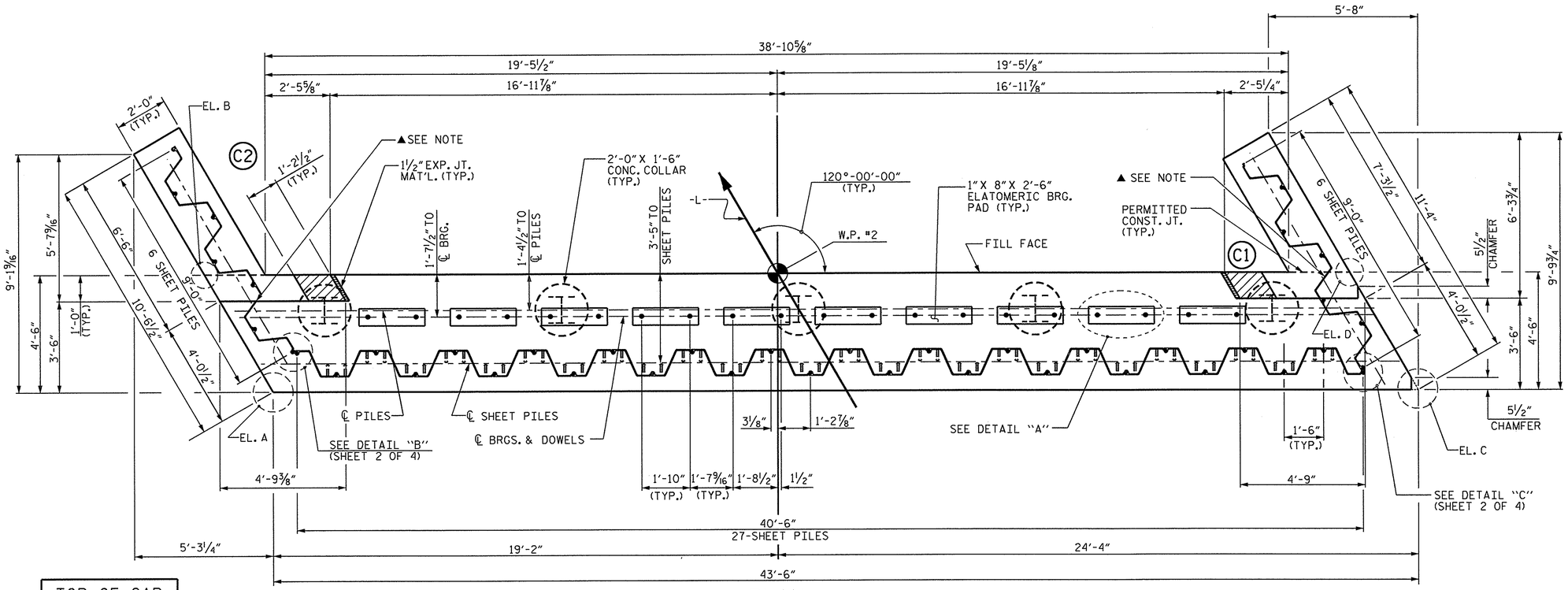

PLAN

NOTES:

STIRRUPS IN CAP MAY BE SHIFTED AS NECESSARY TO CLEAR DOWELS.

FOR PILE SPLICE DETAILS, SEE END BENT SHEET 4 OF 4.

THE CONCRETE IN THE SHADED AREA OF THE WING SHALL BE POURED AFTER THE BARRIER RAIL IS CAST IF SLIP FORMING IS USED.

INSTALL THE 4" DIA. DRAIN PIPE THROUGH THE SHEET PILES AS REQUIRED FOR REINFORCED BRIDGE APPROACH SLABS, SEE ROADWAY PLANS.

FOR ANCHOR STUD DETAIL AND LOCATION, SEE END BENT #1 SHEET 2 OF 4.

FOR ELEVATION VIEW OF SHEET PILING, SEE END BENT #1 SHEET 2 OF 4.

THE STEEL SHEET PILING SHALL HAVE A MINIMUM SECTION MODULUS OF 18.1 IN.³/FT.

STEEL SHEET PILES SHALL BE GALVANIZED. FOR STEEL SHEET PILES, SEE SPECIAL PROVISIONS.

TOP OF CAP ELEVATIONS	
POINT	EL.
Ⓐ	11.93
Ⓑ	11.86
Ⓒ	13.05
Ⓓ	12.99

▲ FOR THIS SHEET:
TOP OF SHEET PILE ELEVATION = 15.10 @ C1
AND 14.30 @ C2
BOTTOM OF SHEET PILE = -17.5
TRIM BACK TO 6" FROM THE FILL FACE
AND DOWN TO THE PREVIOUS SHEET PILE
IN CAP.

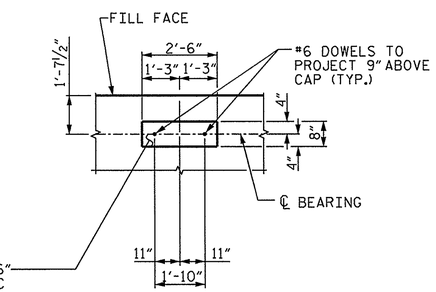

DETAIL "A"

DIMENSIONS FOR EACH BEARING PAD ARE TYPICAL FOR EACH CORED SLAB UNIT.

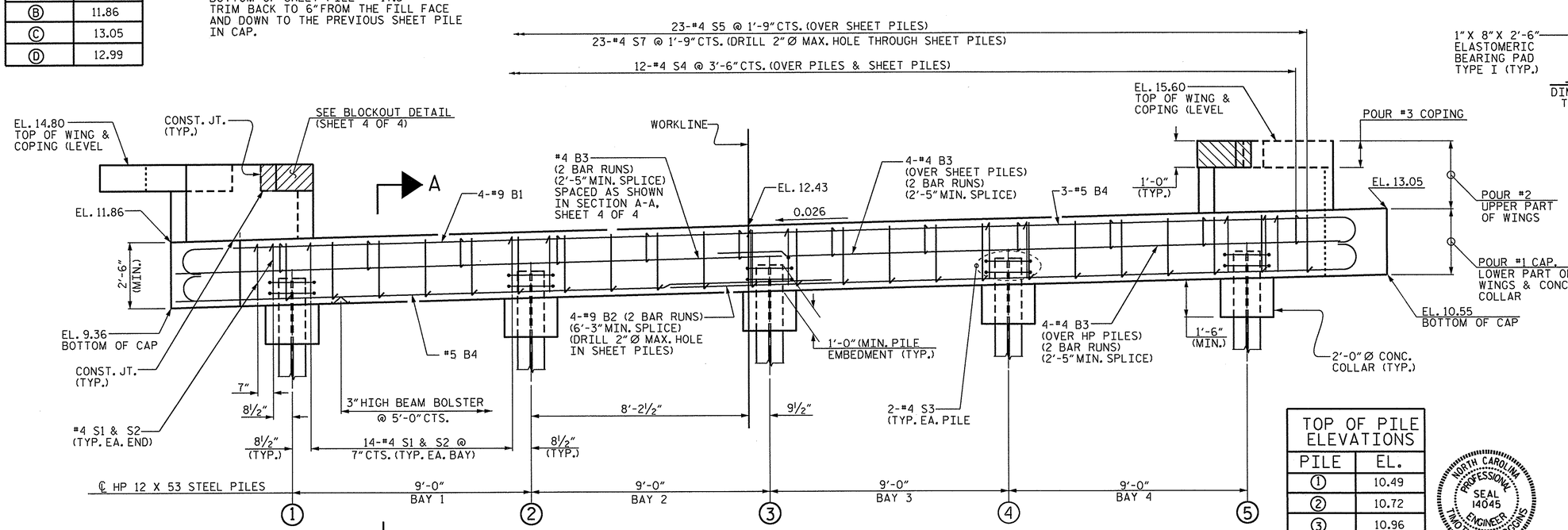

ELEVATION

SHEET PILING NOT SHOWN FOR CLARITY

TOP OF PILE ELEVATIONS	
PILE	EL.
①	10.49
②	10.72
③	10.96
④	11.19
⑤	11.43

NORTH CAROLINA PROFESSIONAL SEAL 14045 ENGINEER TIMOTHY W. COGGINS
06/17/2014

PROJECT NO. 17BP.1.R.72
PASQUOTANK COUNTY
STATION: 13+00.00 -L-

SHEET 1 OF 4

STATE OF NORTH CAROLINA
DEPARTMENT OF TRANSPORTATION
RALEIGH

SUBSTRUCTURE

END BENT NO. 2

REVISIONS						SHEET NO.
NO.	BY:	DATE:	NO.	BY:	DATE:	S-12
1			3			TOTAL SHEETS
2			4			

DRAWN BY : M.D.PISO DATE : 12-02-13
CHECKED BY : N.M.RUFFIN DATE : 04-28-14
DESIGN ENGINEER OF RECORD: N.M.RUFFIN DATE : 05-07-14

17-JUN-2014 10:47
S:\DPG1\Tim\Division 1 LIBR\BD-5101M\piso\BD-5101M_SD_EB#2.dgn
tcoggins

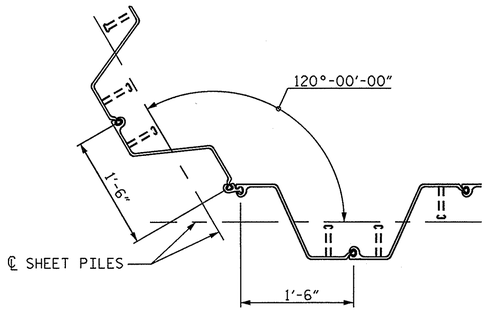

DETAIL "B"

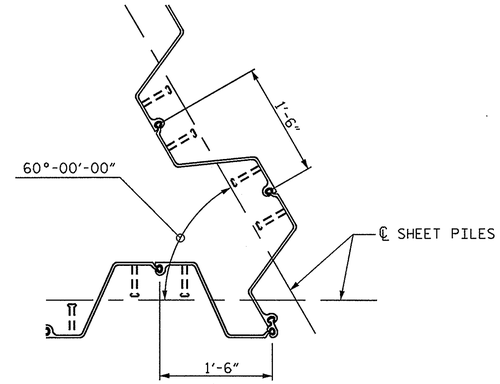

DETAIL "C"

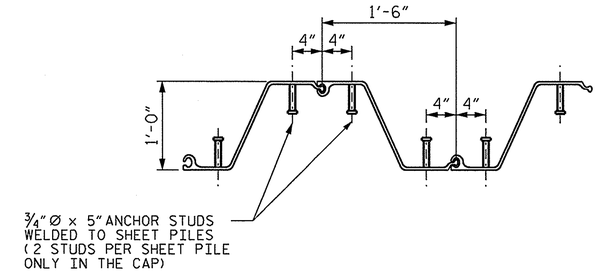

ANCHOR STUD DETAILS

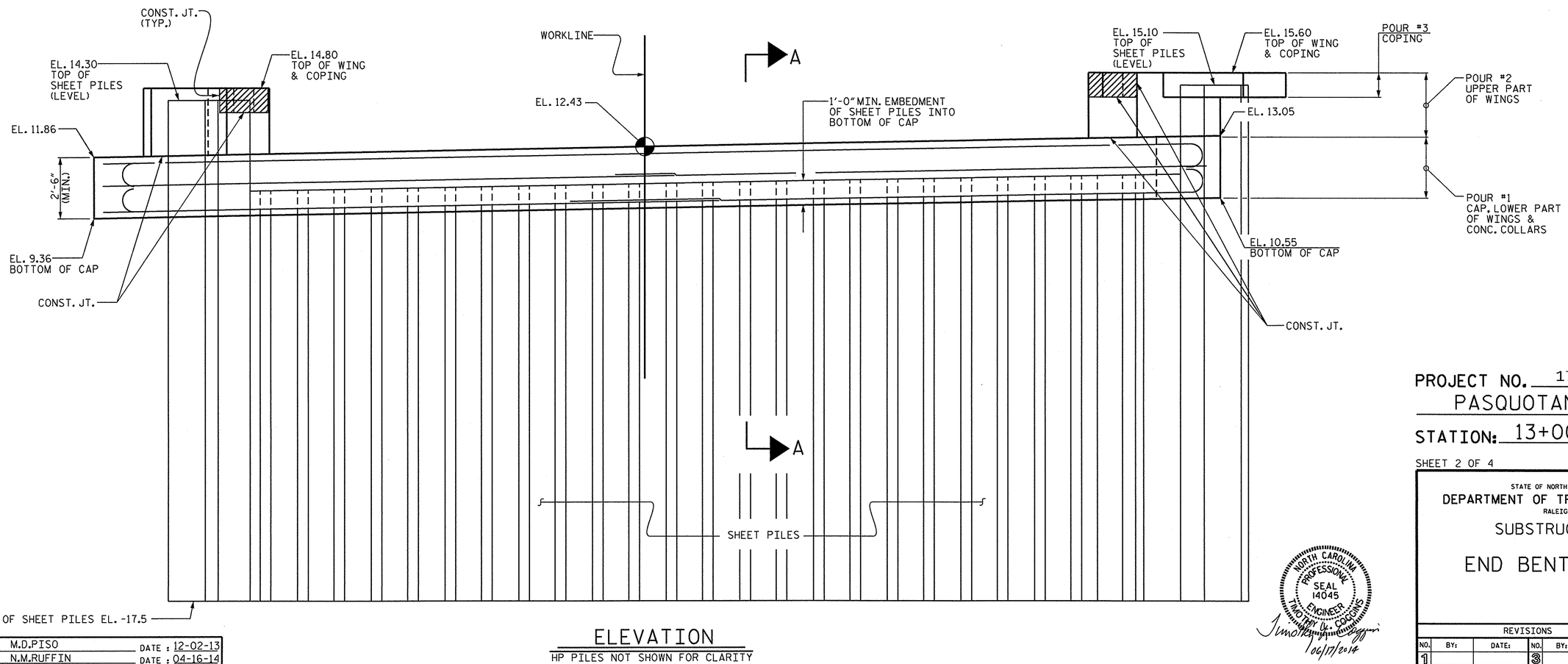

ELEVATION

HP PILES NOT SHOWN FOR CLARITY

NORTH CAROLINA PROFESSIONAL SEAL 14045 ENGINEER TIMOTHY A. COGGINS

Timothy A. Coggins
06/17/2014

PROJECT NO. 17BP.1.R.72

PASQUOTANK COUNTY

STATION: 13+00.00 -L-

SHEET 2 OF 4

STATE OF NORTH CAROLINA
DEPARTMENT OF TRANSPORTATION
RALEIGH

SUBSTRUCTURE

END BENT NO. 2

REVISIONS						SHEET NO.
NO.	BY:	DATE:	NO.	BY:	DATE:	S-13
1			3			TOTAL SHEETS
2			4			

DRAWN BY :	M.D.PISO	DATE :	12-02-13
CHECKED BY :	N.M.RUFFIN	DATE :	04-16-14
DESIGN ENGINEER OF RECORD:	N.M.RUFFIN	DATE :	05-07-14

17-JUN-2014 10:46
S:\DPGI\Tim\Division 1 LIBR\BD-5101M\piso\BD-5101M_SD_EB#2.dgn
tcoggins

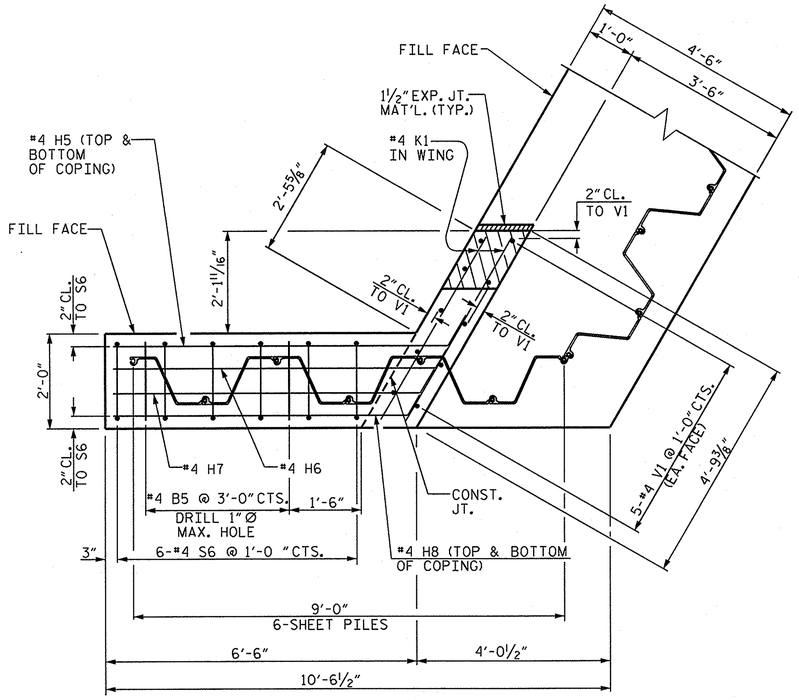

PLAN - COPING (C2)

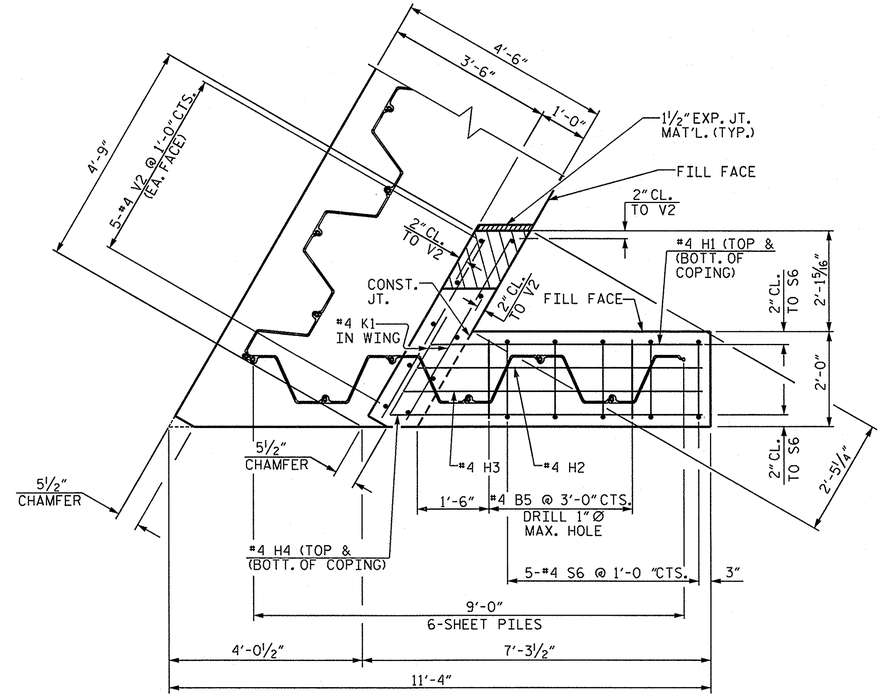

PLAN - COPING (C1)

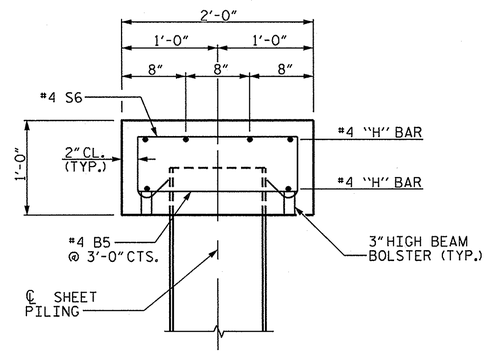

SECTION THRU COPING

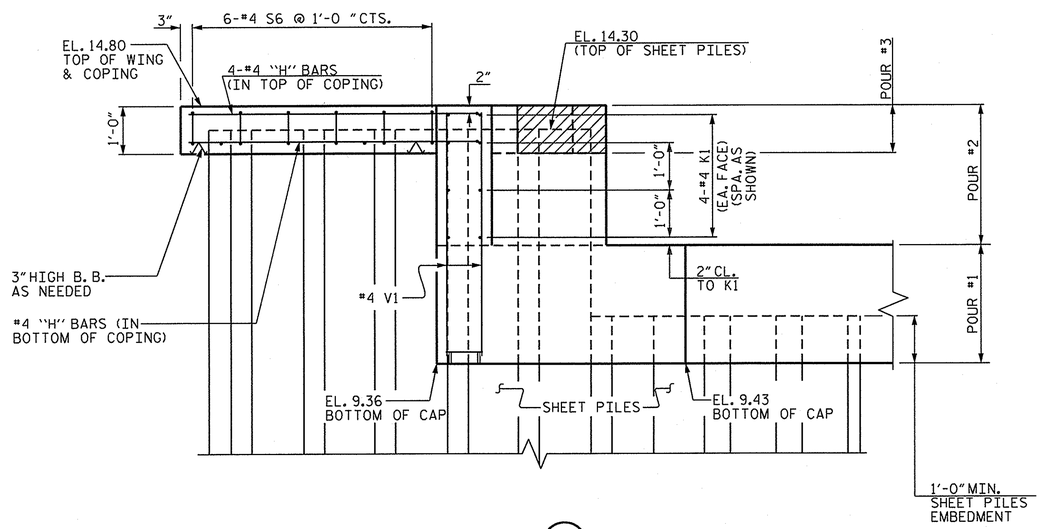

ELEVATION - COPING (C2)

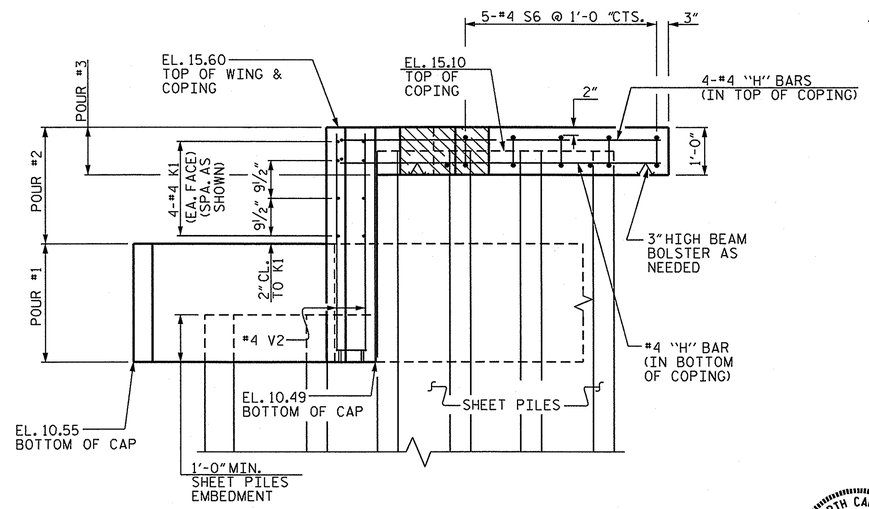

ELEVATION - COPING (C1)

PROJECT NO. 17BP.1.R.72

PASQUOTANK COUNTY

STATION: 13+00.00 -L-

SHEET 3 OF 4

STATE OF NORTH CAROLINA
DEPARTMENT OF TRANSPORTATION
RALEIGH

SUBSTRUCTURE

END BENT NO. 2

NORTH CAROLINA PROFESSIONAL SEAL 14045 ENGINEER TIMOTHY C. COGGINS

06/17/2014

REVISIONS								SHEET NO.
NO.	BY:	DATE:	NO.	BY:	DATE:			S-14
1			3					TOTAL SHEETS
2			4					

DRAWN BY :	M.D.PISO	DATE :	12-02-13
CHECKED BY :	N.M.RUFFIN	DATE :	04-16-14
DESIGN ENGINEER OF RECORD:	N.M.RUFFIN	DATE :	05-07-14

17-JUN-2014 10:45
S:\DPG1\Tim\Division 1 LIBR\BD-5101M\piso\BD-5101M_SD_EB*2.dgn
tcoggins

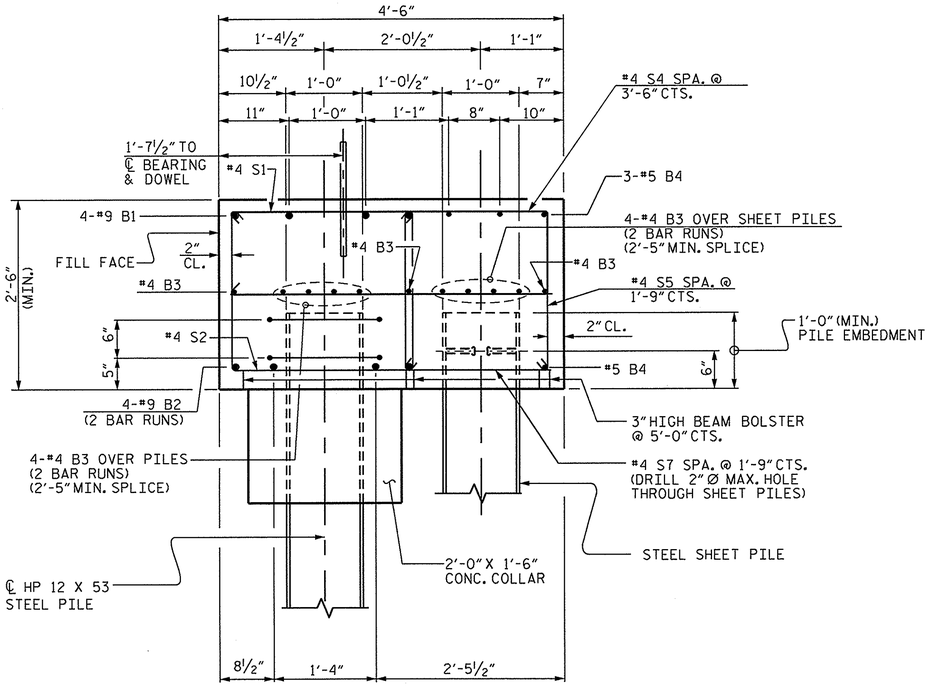

SECTION A - A

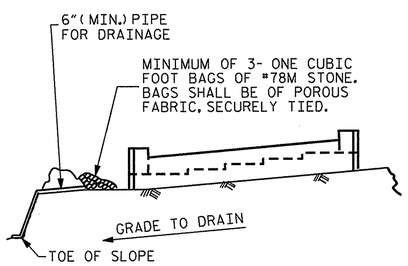

BAGGED STONE AND PIPE SHALL BE PLACED IMMEDIATELY AFTER COMPLETION OF END BENT EXCAVATION. PIPE MAY BE EITHER CONCRETE, CORRUGATED STEEL, CORRUGATED ALUMINUM ALLOY, OR CORRUGATED PLASTIC. PERFORATED PIPE WILL NOT BE ALLOWED.

BAGGED STONE SHALL REMAIN IN PLACE UNTIL THE ENGINEER DIRECTS THAT IT BE REMOVED. THE CONTRACTOR SHALL REMOVE AND DISPOSE OF SILT ACCUMULATIONS AT BAGGED STONE WHEN SO DIRECTED BY THE ENGINEER. BAGS SHALL BE REMOVED AND REPLACED WHENEVER THE ENGINEER DETERMINES THAT THEY HAVE DETERIORATED AND LOST THEIR EFFECTIVENESS.

NO SEPARATE PAYMENT WILL BE MADE FOR THIS WORK AND THE ENTIRE COST OF THIS WORK SHALL BE INCLUDED IN THE UNIT CONTRACT PRICE BID FOR THE SEVERAL PAY ITEMS.

TEMPORARY DRAINAGE AT END BENT

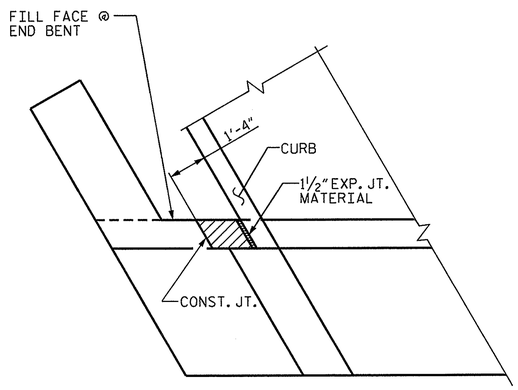

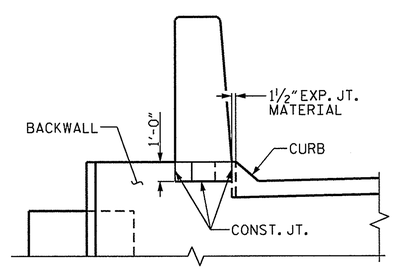

BLOCKOUT IN WING WALL

(WHEN APPROACH SLAB HAS CURB)

BAR TYPES

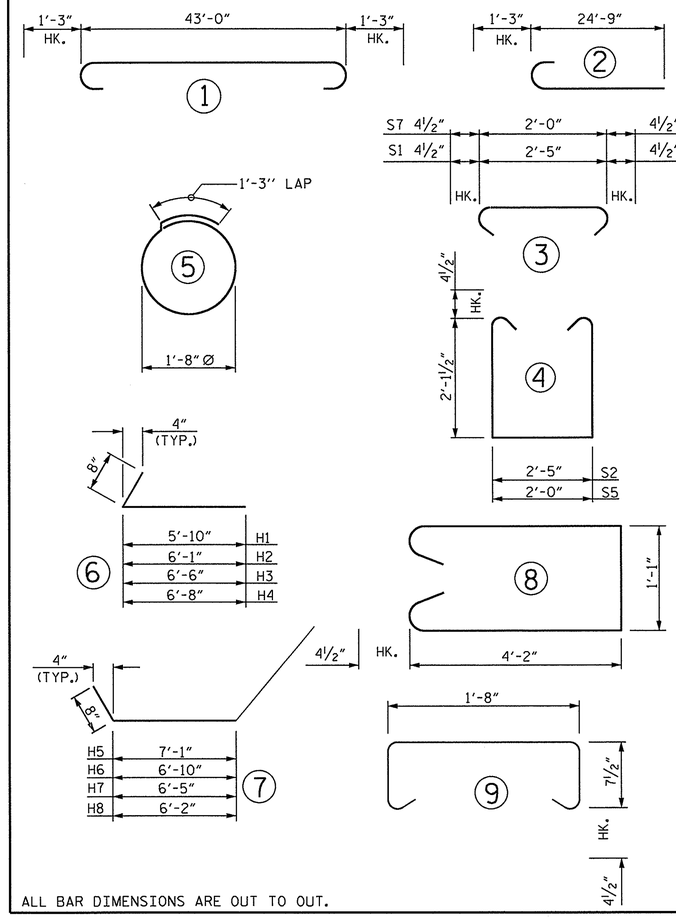

ALL BAR DIMENSIONS ARE OUT TO OUT.

END BENT #2

BILL OF MATERIAL

BAR	NO.	SIZE	TYPE	LENGTH	WEIGHT
B1	4	#9	1	45'-6"	619
B2	8	#9	2	26'-0"	707
B3	22	#4	STR.	22'-10"	336
B4	4	#5	STR.	43'-2"	180
B5	4	#4	STR.	1'-8"	4
D1	20	#6	STR.	1'-6"	45
H1	2	#4	6	6'-6"	9
H2	1	#4	6	6'-9"	5
H3	1	#4	6	7'-2"	5
H4	2	#4	6	7'-4"	10
H5	2	#4	7	7'-9"	10
H6	1	#4	7	7'-6"	5
H7	1	#4	7	7'-1"	5
H8	2	#4	7	6'-10"	9
K1	16	#4	STR.	4'-4"	46
S1	60	#4	3	3'-2"	127
S2	60	#4	4	7'-5"	297
S3	10	#4	5	6'-6"	43
S4	12	#4	8	10'-2"	81
S5	23	#4	4	7'-0"	108
S6	11	#4	9	3'-8"	27
S7	23	#4	3	2'-9"	42
V1	10	#4	STR.	5'-0"	33
V2	10	#4	STR.	4'-10"	32
REINFORCING STEEL					2,785 LBS.

CLASS "A" CONCRETE BREAKDOWN	
POUR #1	
CONC. COLLARS & CAP	19.0 CU. YDS.
POUR #2	
UPPER PART OF WINGS	1.0 CU. YDS.
POUR #3	
COPING	0.9 CU. YDS.
TOTAL	20.9 CU. YDS.
HP 12 X 53 STEEL PILES	
NO. 5	400.0 LIN. FT.
PILE REDRIVES	
EA.	1
STEEL SHEET PILES	
NO. 90 2	
NO. PILES 39	
TOTAL NO. 41	1,835 SQ. FT.

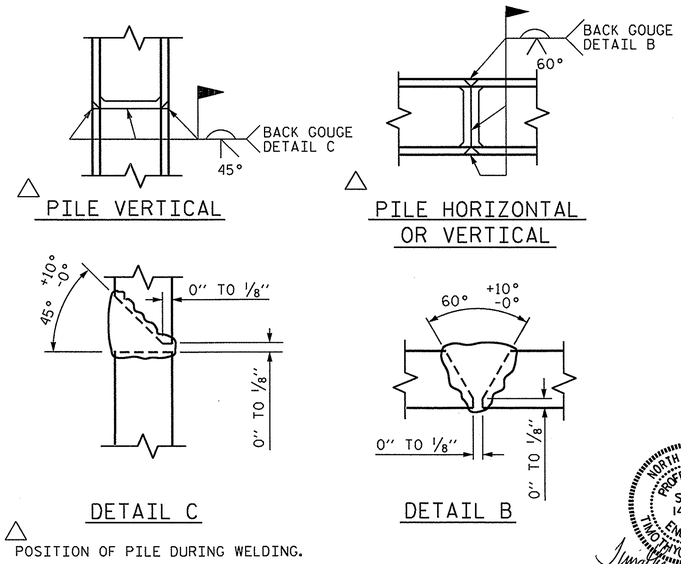

△ PILE VERTICAL

△ PILE HORIZONTAL OR VERTICAL

DETAIL C

DETAIL B

△ POSITION OF PILE DURING WELDING.

PILE SPLICE DETAILS

PROJECT NO. 17BP.1.R.72

PASQUOTANK COUNTY

STATION: 13+00.00 -L-

SHEET 4 OF 4

STATE OF NORTH CAROLINA
DEPARTMENT OF TRANSPORTATION
RALEIGH

SUBSTRUCTURE

END BENT NO. 2

NORTH CAROLINA PROFESSIONAL SEAL 14045 ENGINEER TIMOTHY C. COGGINS
06/17/2014

REVISIONS						SHEET NO.
NO.	BY:	DATE:	NO.	BY:	DATE:	S-15
1			3			TOTAL SHEETS
2			4			

DRAWN BY : M.D.PISO DATE : 12-15-13
CHECKED BY : N.M.RUFFIN DATE : 04-22-14
DESIGN ENGINEER OF RECORD: N.M.RUFFIN DATE : 05-07-14

17-JUN-2014 10:45
S:\DPG1\Tlm\Division 1 LIBR\BD-5101M\plso\BD-5101M_SD_EB#2.dgn
tcoggins

NOTES :

FOR BERM WIDTH DIMENSIONS, SEE GENERAL DRAWING.

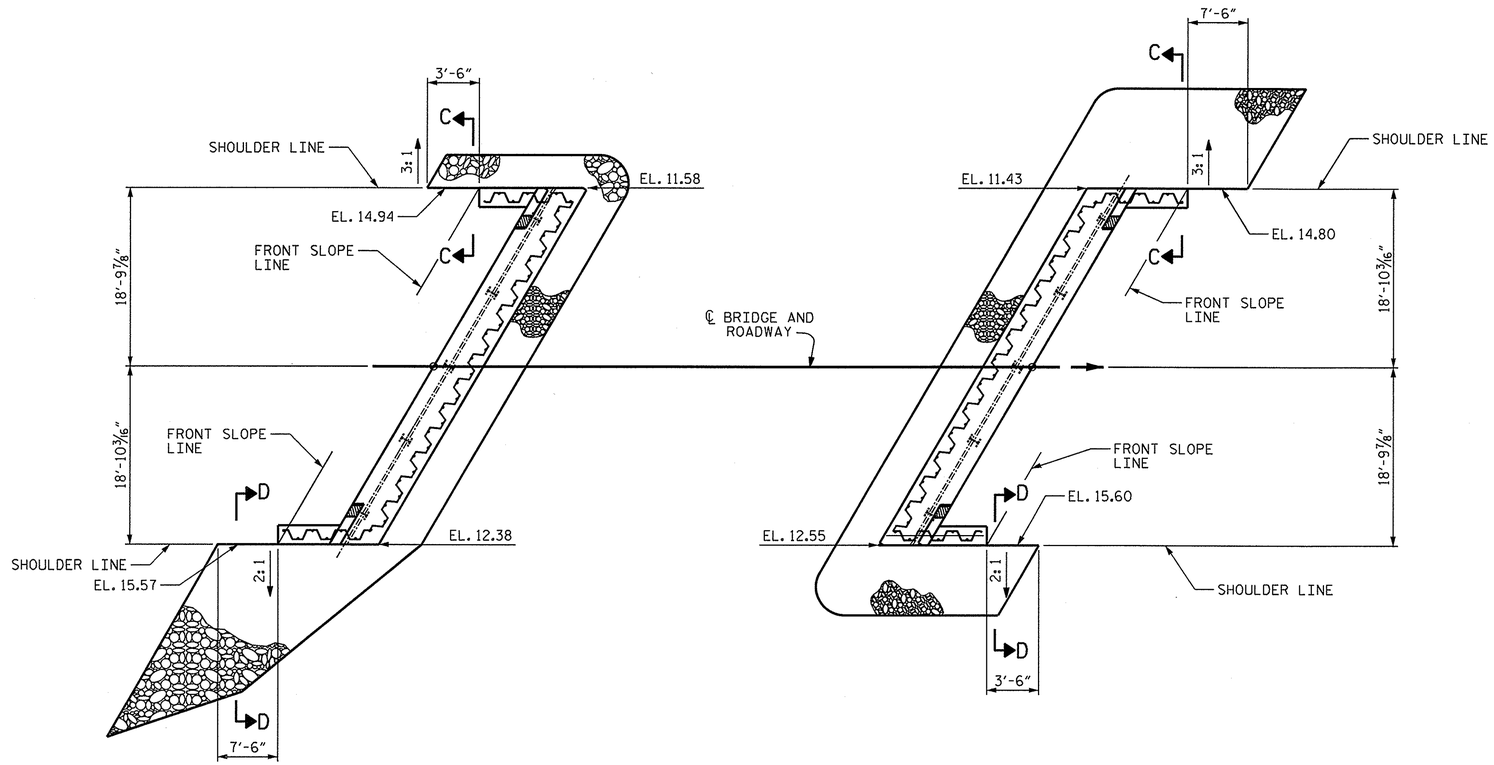

@ END BENT No. 1

@ END BENT No. 2

PLAN

SHOULDER RIP RAP IS HIGHER THAN BERM RIP RAP

ESTIMATED QUANTITIES		
BRIDGE @ STA. 13+00.00 -L-	RIP RAP CLASS II (2'-0" THICK)	GEOTEXTILE FOR DRAINAGE
	TONS	SQUARE YARDS
END BENT 1	55	57
END BENT 2	55	60

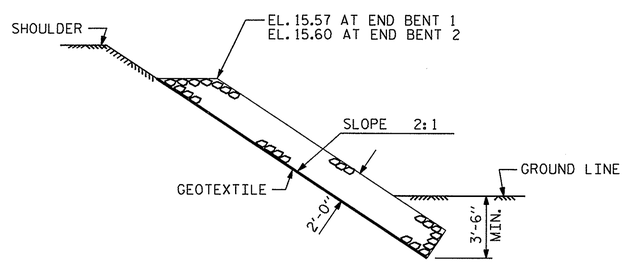

SECTION D-D

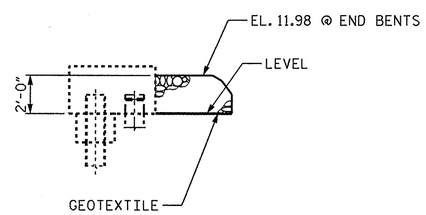

℄ SECTION

BERM RIP RAPPED

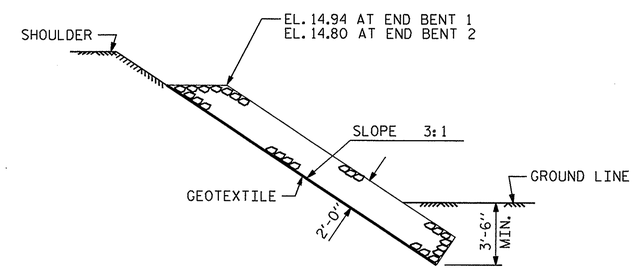

SECTION C-C

PROJECT NO. 17BP.1.R.72

PASQUOTANK COUNTY

STATION: 13+00.00 -L-

STATE OF NORTH CAROLINA
DEPARTMENT OF TRANSPORTATION
RALEIGH

RIP RAP DETAILS

NORTH CAROLINA PROFESSIONAL SEAL 14045 ENGINEER TIMOTHY L. COGGINS
07/02/2014

REVISIONS							SHEET NO.
NO.	BY:	DATE:	NO.	BY:	DATE:		
1			3				TOTAL SHEETS
2			4				

DRAWN BY : N. Ruffin DATE : 6/9/14
CHECKED BY : T. L. COGGINS DATE : 6/16/14
DESIGN ENGINEER OF RECORD: N. RUFFIN DATE : 6/17/14

02-JUL-2014 13:09
S:\DPG1\Tim\Division 1 LIBR\BD-5101M\nruffin\BD5101M_sm_Design_01.dgn
tcoggins

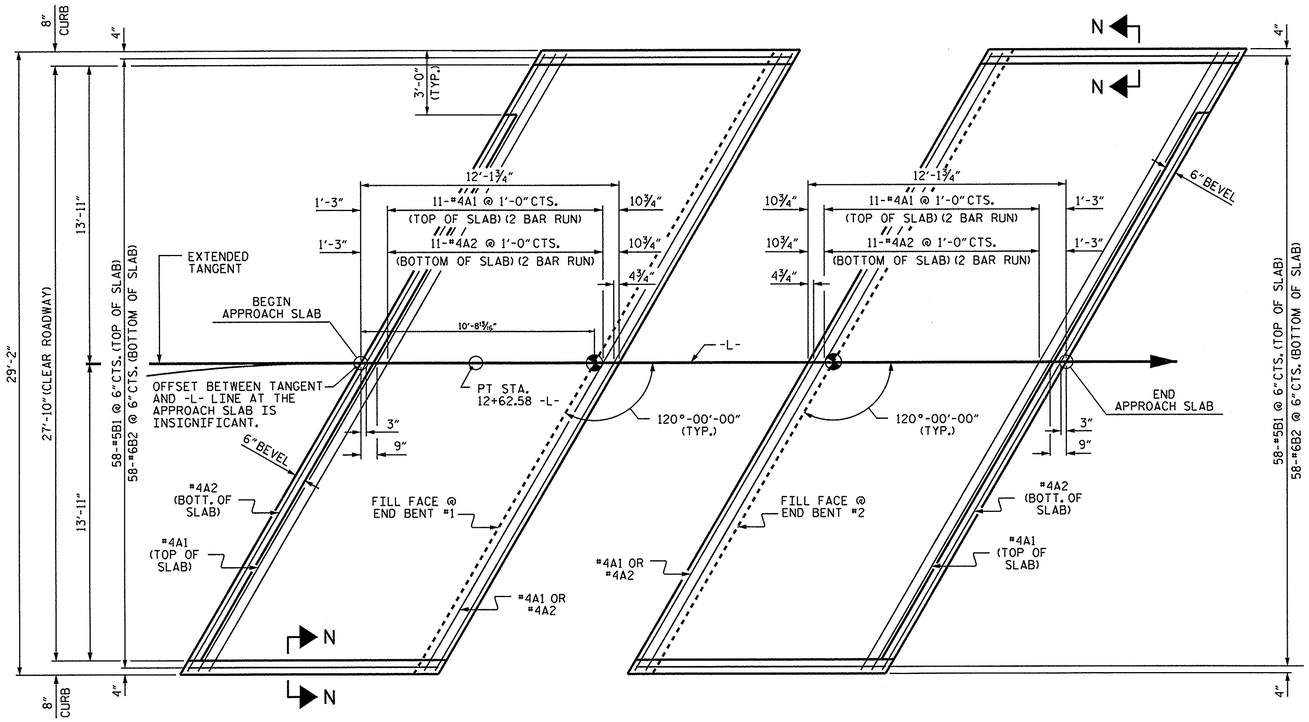

PLAN @ END BENT #1 PLAN @ END BENT #2

DIMENSIONS SHOWN ARE TYPICAL FOR BOTH APPROACH SLABS

NOTES

FOR REINFORCED BRIDGE APPROACH FILL INCLUDING GEOTEXTILE, IMPERMEABLE GEOMEMBRANE, 4"Ø DRAINAGE PIPE, #78M STONE, AND SELECT MATERIAL. SEE ROADWAY PLANS.

AREA BETWEEN THE WINGWALL AND APPROACH SLAB SHALL BE GRADED TO DRAIN THE WATER AWAY FROM THE FILL FACE OF THE BRIDGE AND SHALL BE PAVED. SEE ROADWAY PLANS.

APPROACH SLAB GROOVING IS NOT REQUIRED.

BILL OF MATERIAL

APPROACH SLAB AT EB #1

BAR	NO.	SIZE	TYPE	LENGTH	WEIGHT
* A1	26	#4	STR	17'-8"	307
A2	26	#4	STR	17'-7"	305
* B1	58	#5	STR	11'-1"	670
B2	58	#6	STR	11'-7"	1009
REINFORCING STEEL				LBS.	1314
* EPOXY COATED REINFORCING STEEL				LBS.	977
CLASS AA CONCRETE				C. Y.	17.1

APPROACH SLAB AT EB #2

BAR	NO.	SIZE	TYPE	LENGTH	WEIGHT
* A1	26	#4	STR	17'-8"	307
A2	26	#4	STR	17'-7"	305
* B1	58	#5	STR	11'-1"	670
B2	58	#6	STR	11'-7"	1009
REINFORCING STEEL				LBS.	1314
* EPOXY COATED REINFORCING STEEL				LBS.	977
CLASS AA CONCRETE				C. Y.	17.1

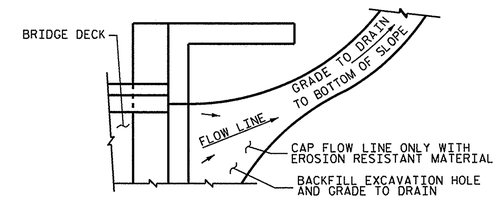

NOTE: IF THE APPROACH SLAB IS NOT CONSTRUCTED IMMEDIATELY AFTER THE BACKFILLING OF THE END BENT EXCAVATION, GRADE TO DRAIN TO THE BOTTOM OF THE SLOPE AND PROVIDE EROSION RESISTANT MATERIAL, SUCH AS FIBERGLASS ROVING OR AS DIRECTED BY THE ENGINEER TO PREVENT SOIL EROSION AND TO PROTECT THE AREA ADJACENT TO THE STRUCTURE. THE CONTRACTOR WILL BE REQUIRED TO REMOVE THESE MATERIALS PRIOR TO CONSTRUCTION OF THE APPROACH SLAB.

TEMPORARY DRAINAGE DETAIL

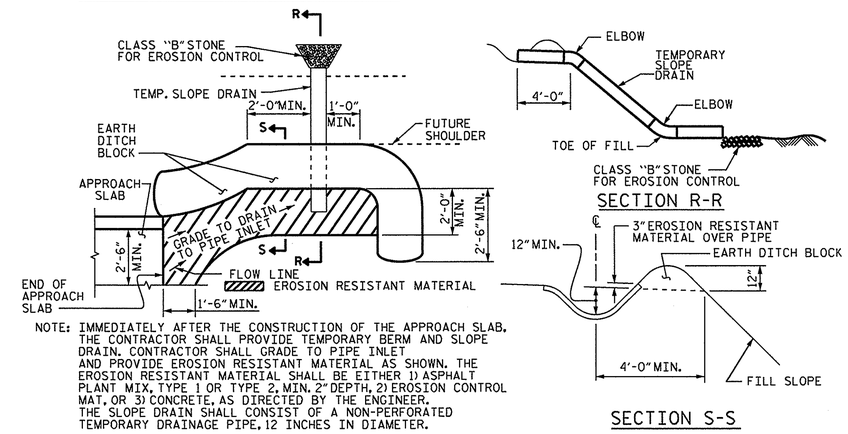

NOTE: IMMEDIATELY AFTER THE CONSTRUCTION OF THE APPROACH SLAB, THE CONTRACTOR SHALL PROVIDE TEMPORARY BERM AND SLOPE DRAIN. CONTRACTOR SHALL GRADE TO PIPE INLET AND PROVIDE EROSION RESISTANT MATERIAL AS SHOWN. THE EROSION RESISTANT MATERIAL SHALL BE EITHER 1) ASPHALT PLANT MIX, TYPE 1 OR TYPE 2, MIN. 2" DEPTH, 2) EROSION CONTROL MAT, OR 3) CONCRETE, AS DIRECTED BY THE ENGINEER. THE SLOPE DRAIN SHALL CONSIST OF A NON-PERFORATED TEMPORARY DRAINAGE PIPE, 12 INCHES IN DIAMETER.

PLAN VIEW

TEMPORARY BERM AND SLOPE DRAIN DETAILS

(TO BE USED WHEN SHOULDER BERM GUTTER IS REQUIRED)

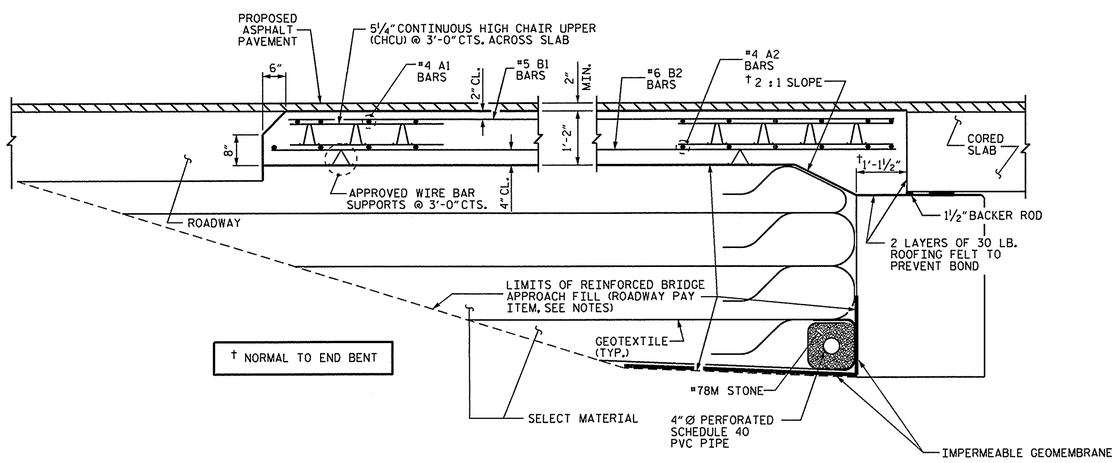

† NORMAL TO END BENT

SECTION THRU SLAB

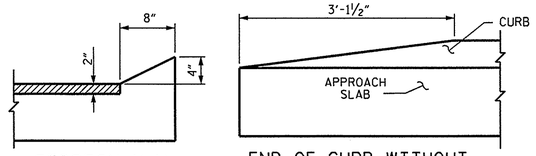

SECTION N-N END OF CURB WITHOUT SHOULDER BERM GUTTER

CURB DETAILS

SPLICE LENGTHS		
BAR SIZE	EPOXY COATED	UNCOATED
#4	2'-0"	1'-9"
#5	2'-6"	2'-2"
#6	3'-10"	2'-7"

NORTH CAROLINA PROFESSIONAL SEAL 14045 ENGINEER TIMOTHY H. COGGINS

Timothy H. Coggins 06/17/2014

PROJECT NO. 17BP.1.R.72

PASQUOTANK COUNTY

STATION: 13+00.00 -L-

STATE OF NORTH CAROLINA
DEPARTMENT OF TRANSPORTATION
RALEIGH

STANDARD
BRIDGE APPROACH SLAB
FOR PRESTRESSED CONCRETE
CORED SLAB UNIT
(SUB-REGIONAL TIER)
120° SKEW

REVISIONS						SHEET NO.
NO.	BY:	DATE:	NO.	BY:	DATE:	S-17
1			3			TOTAL SHEETS
2			4			

ASSEMBLED BY : REZA KOUCHEKI DATE : 10/16/13
CHECKED BY : MD PISO DATE : 11/19/13
DRAWN BY : SHS/MAA 5-09 REV. 12-11 MAA/AAC
CHECKED BY : BCH 5-09

17-JUN-2014 09:57
S:\DPG1\Tim\Division 1 LIBR\BD-5101M\GK\BD-5101M_SD_CS.dgn
tcoggins

STD. NO. BAS_30_120S

PROJECT REFERENCE NO.	SHEET NO.

NOTES:
1) DETAIL DOES NOT APPLY TO OGAFC AND ULTRA-THIN BONDED WEARING COURSE.
2) BACKFILL SHOULDER WITH APPROVED MATERIAL.
3) THE SHOULDER WEDGE DEVICE MAY BE DISENGAGED AT PAVED DRIVEWAYS AND SIDE STREETS.

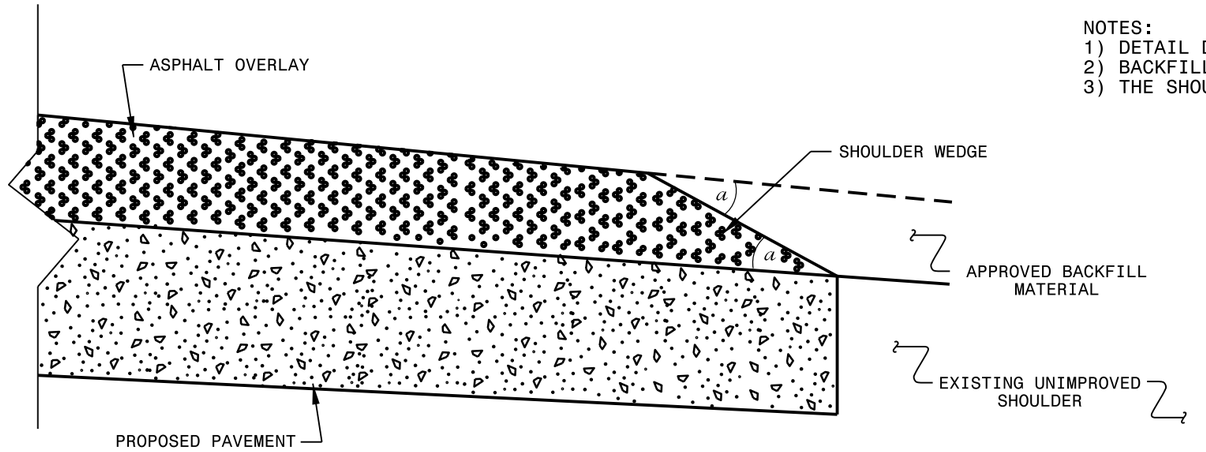

SHOULDER WEDGE DETAIL

(Resurfacing Projects w/ Widening or with Existing Paved Shoulder having no dropoffs)

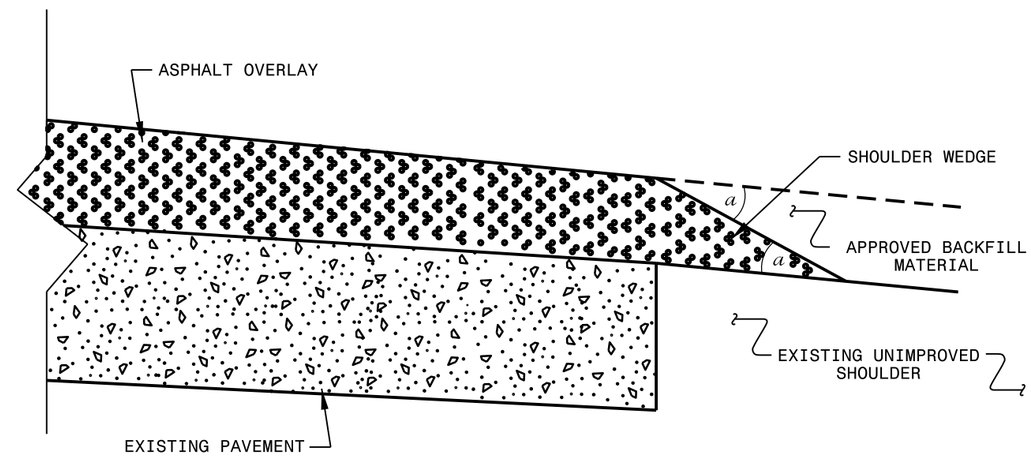

SHOULDER WEDGE DETAIL

(Resurfacing Projects w/ NO Widening)

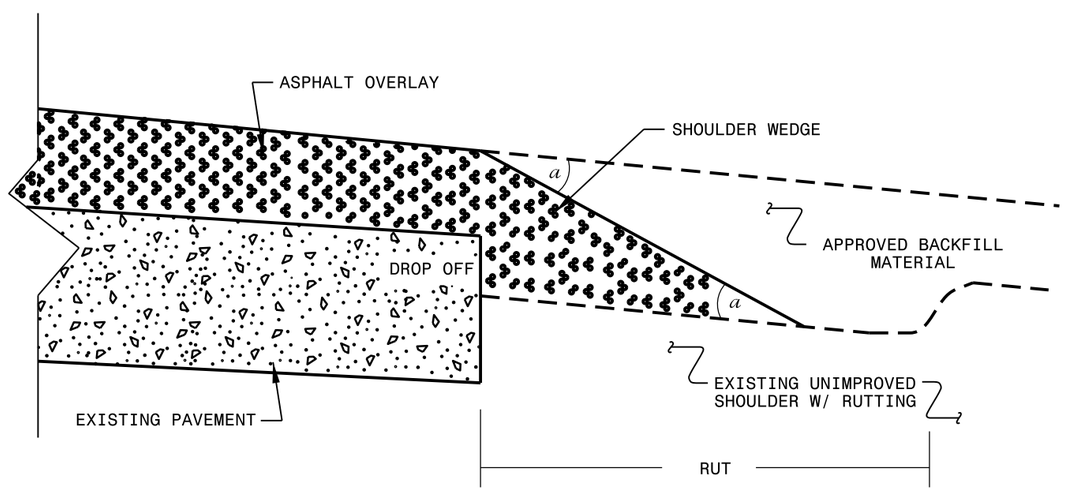

SHOULDER WEDGE DETAIL

(Resurfacing Adjacent to Rutted Shoulder)

- SHOULDER WEDGE ANGLE = 30°

CONTRACT STANDARDS AND DEVELOPMENT UNIT
Office 919-707-6950 FAX 919-250-4119

SHOULDER WEDGE DETAILS

ORIGINAL BY:	T.SPELL	DATE:	7-19-11
MODIFIED BY:		DATE:	10/16/12
CHECKED BY:		DATE:	
FILE SPEC.:	$:usr/details/stand/shoulderwedgedetail.dgn		

$$$$$$SYSTIME$$$$$$
$$$$$$USERNAME$$$$$$

WBS # 17BP.1.R.72

CONTRACT #: DA00209

TRAFFIC MANAGEMENT FOR TEMPORARY ROAD CLOSURE

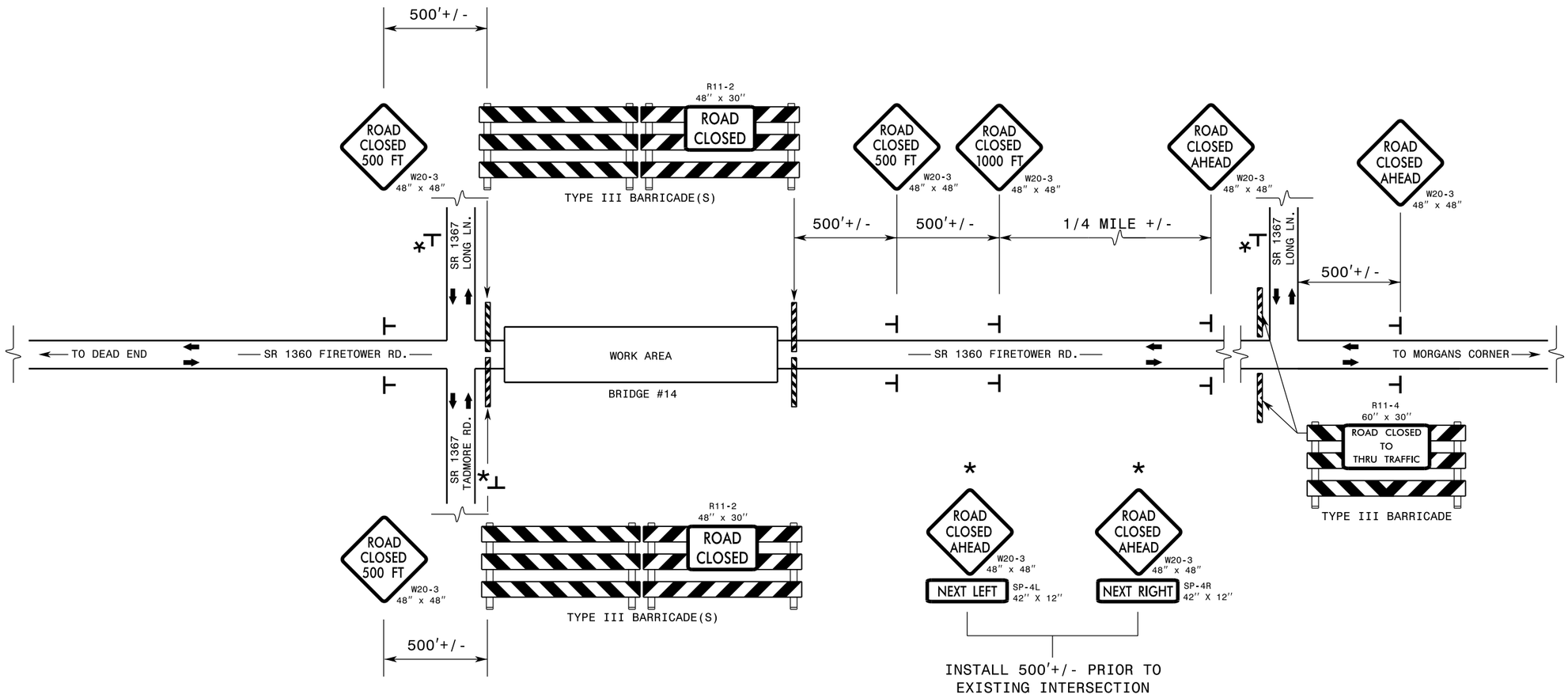

LEGEND

- DIRECTION OF TRAFFIC FLOW
- STATIONARY SIGN
- BARRICADE (TYPE III)

ROADWAY STANDARD DRAWINGS

THE FOLLOWING ROADWAY STANDARDS AS SHOWN IN "ROADWAY STANDARD DRAWINGS" - PROJECT SERVICES UNIT - N.C. DEPARTMENT OF TRANSPORTATION - RALEIGH N.C., ARE CONSIDERED A PART OF THE PLANS:

STD. NO.	TITLE
1101.03	TEMPORARY ROAD CLOSURES
1101.04	TEMPORARY SHOULDER CLOSURES
1110.01	STATIONARY WORK ZONE SIGNS
1110.02	PORTABLE WORK ZONE SIGNS
1135.01	CONES
1145.01	BARRICADES
904.10	ORIENTATION OF GROUND MOUNTED SIGNS

GENERAL NOTES

1 - INSTALLATION OF TEMPORARY ROUTE MARKERS, DESTINATION SIGNS AND ANY NECESSARY MODIFICATIONS TO EXISTING OR PROPOSED REGULATORY OR WARNING SIGNS WILL BE MADE BY OTHERS (STATE OR CITY FORCES) UNLESS OTHERWISE DESIGNATED IN PLANS. PROVIDE A MINIMUM 21 CALENDAR DAY NOTICE TO STATE FORCES BEFORE A ROADWAY IS CLOSED TO TRAFFIC SUCH THAT NECESSARY PROVISIONS CAN BE MADE TO INFORM LOCAL EMERGENCY AND LAW ENFORCEMENT PERSONNEL, SCHOOLS OR ANY OTHER PARTIES AFFECTED BY THE ROAD CLOSURE.

2 - INSTALL SIGNS BEFORE THE BARRICADES WHEN CLOSING THE ROADWAY TO TRAFFIC. REMOVE BARRICADES BEFORE SIGNS WHEN OPENING THE ROADWAY TO TRAFFIC. INSTALL/REMOVE SIGNS AND BARRICADES WITHIN THE SAME CALENDAR DAY.

3 - POSITION WING BARRICADES ON THE SHOULDERS AND SLOPE THE STRIPES DOWNWARD IN THE DIRECTION TOWARD WHICH TRAFFIC MUST TURN IN DETOURING.

4 - USE ADDITIONAL TYPE III BARRICADES IN STAGGERED LOCATIONS SUPPLEMENTED WITH SIGN R11-4 "ROAD CLOSED TO THRU TRAFFIC" IN THE EVENT THAT TRAFFIC MUST BE MAINTAINED BEYOND THE DETOUR POINT.

5 - SEE STANDARD SPECIFICATION 1089-1 FOR WORK ZONE SIGNS.

6 - SEE STANDARD SPECIFICATION 1089-2 FOR WORK ZONE SIGN SUPPORTS.

PROJECT: 17BP.1.R.72

PASQUOTANK COUNTY

STATION: 13+00.00 -L-

REPLACES BRIDGE NO. 690014

STATE OF NORTH CAROLINA
DEPARTMENT OF TRANSPORTATION
RALEIGH

TRAFFIC MANAGEMENT PLAN

NOT TO SCALE

24'-0" CLEAR ROADWAY - 45° SKEW

REVISIONS						SHEET NO.
NO.	BY:	DATE:	NO.	BY:	DATE:	35
1			1			TOTAL SHEETS
2			2			35

DRAWN BY: DHS DATE: 11/14/14
CHECKED BY: _____ DATE: _____