09/08/99

PROJECT: 17BP.10.R.21

CONTRACT:

See Sheet 1-A For Index of Sheets
See Sheet 1-B For Symbology

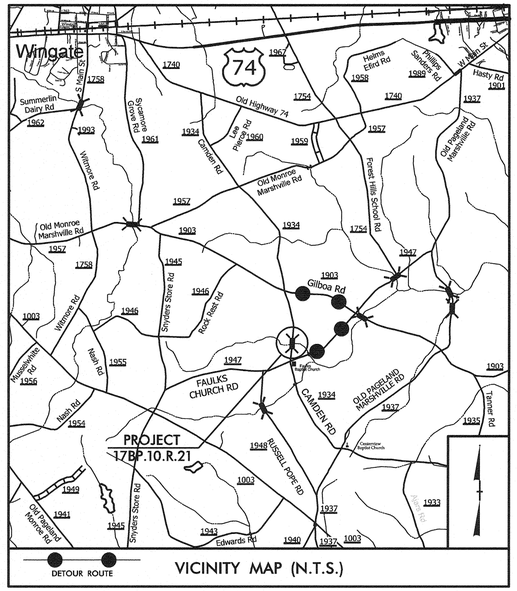

VICINITY MAP (N.T.S.)

STATE OF NORTH CAROLINA
DIVISION OF HIGHWAYS

UNION COUNTY

STATE	STATE PROJECT REFERENCE NO.	SHEET NO.	TOTAL SHEETS
N.C.	17BP.10.R.21	1	

STATE PROJ. NO.	F. A. PROJ. NO.	DESCRIPTION
17BP.10.R.21		P.E.
17BP.10.R.21		R/W & UTILITIES
17BP.10.R.21		CONST.

LOCATION: BRIDGE #88 OVER REEDY CREEK ON SR 1934 (CAMDEN RD.)

TYPE OF WORK: GRADING, DRAINAGE, PAVING, AND STRUCTURE

NAD 83

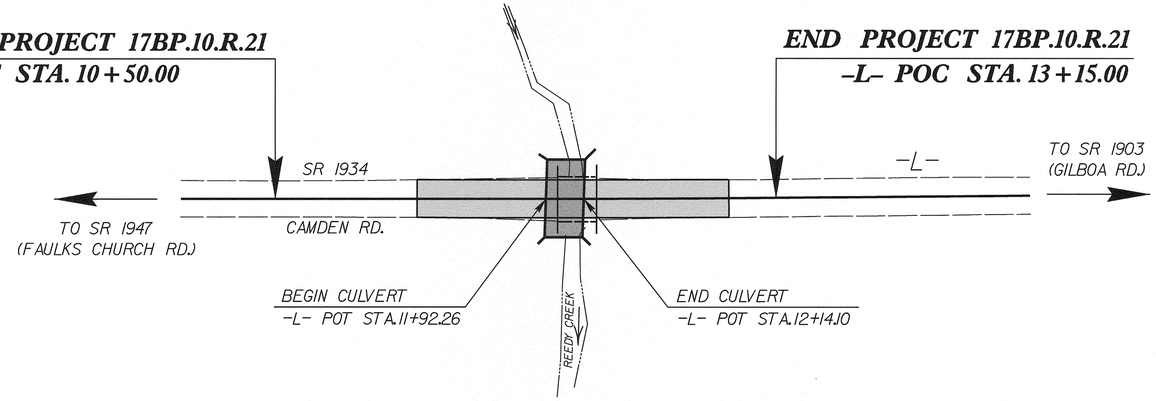

CLEARING ON THIS PROJECT SHALL BE PERFORMED TO THE LIMITS ESTABLISHED BY METHOD II.

NCDOT CONTACT:

GARLAND HAYWOOD, PE
DIVISION BRIDGE PROGRAM MANAGER
(704) 983-4400

GRAPHIC SCALES

PLANS: 20 10 0 20 40
PROFILE (HORIZONTAL): 20 10 0 20 40
PROFILE (VERTICAL): 4 2 0 4 8

DESIGN DATA

ADT 2009 = 340
T = 6 %
V = 60 MPH

FUNCTIONAL CLASSIFICATION: LOCAL

PROJECT LENGTH

LENGTH ROADWAY PROJECT 17BP.10.R.21	=	0.046 mile
LENGTH STRUCTURES PROJECT 17BP.10.R.21	=	0.004 mile
TOTAL LENGTH PROJECT 17BP.10.R.21	=	0.050 mile

Prepared For:
DIVISION OF HIGHWAYS
1000 Birch Ridge Dr., Raleigh NC, 27610
By:
M A Engineering Consultants, Inc.
598 East Chatham Street - Suite 137
Cary, NC 27511
Phone: 919.297.0220 Fax: 919.297.0221

2012 STANDARD SPECIFICATIONS

RIGHT OF WAY DATE: AUGUST 2, 2012

LETTING DATE: FEBRUARY 20, 2013

BURKE EVANS, PE
PROJECT ENGINEER

KEVIN S. HUTCHENS, PE
PROJECT DESIGN ENGINEER

HYDRAULICS ENGINEER
NORTH CAROLINA PROFESSIONAL SEAL 21656 ENGINEER ROGER S. WEADON
1/18/13 P.E.
SIGNATURE:

ROADWAY DESIGN ENGINEER
NORTH CAROLINA PROFESSIONAL SEAL 19724 ENGINEER DAVID BURKE EVANS
1/18/13 P.E.
SIGNATURE:

STATE OF NORTH CAROLINA • DEPARTMENT OF TRANSPORTATION

1/17/2013
5:36:41 PM
E:\roadway\proj\890088_Rdy_tsh.dgn

PROJECT REFERENCE NO.	SHEET NO.
17BP.10.R.21	1-A

ROADWAY DESIGN ENGINEER

NORTH CAROLINA PROFESSIONAL SEAL 19724 ENGINEER DAVID BURKE EVANS

1/16/13

M A Engineering Consultants, Inc.
598 East Chatham Street Suite 137 Cary, NC 27511
Phone: 919.297.0220 Fax: 919.297.0221

GENERAL NOTES:

2012 SPECIFICATIONS
EFFECTIVE: 01-17-2012
REVISED: 07-30-2012

GRADE LINE:
GRADING AND SURFACING:

THE GRADE LINES SHOWN DENOTE THE FINISHED ELEVATION OF THE PROPOSED SURFACING AT GRADE POINTS SHOWN ON THE TYPICAL SECTIONS. GRADE LINES MAY BE ADJUSTED AT THEIR BEGINNING AND ENDING AND AT STRUCTURES AS DIRECTED BY THE ENGINEER IN ORDER TO SECURE A PROPER TIE-IN.

CLEARING:

CLEARING ON THIS PROJECT SHALL BE PERFORMED TO THE LIMITS ESTABLISHED BY METHOD II.

SUPERELEVATION:

ALL CURVES ON THIS PROJECT SHALL BE SUPERELEVATED IN ACCORDANCE WITH STD. NO. 225.04 USING THE RATE OF SUPERELEVATION AND RUNOFF SHOWN ON THE PLANS. SUPERELEVATION IS TO BE REVOLVED ABOUT THE GRADE POINTS SHOWN ON THE TYPICAL SECTIONS.

SHOULDER CONSTRUCTION:

ASPHALT, EARTH, AND CONCRETE SHOULDER CONSTRUCTION ON THE HIGH SIDE OF SUPERELEVATED CURVES SHALL BE IN ACCORDANCE WITH STD. NO. 560.01.

SIDE ROADS:

THE CONTRACTOR WILL BE REQUIRED TO DO ALL NECESSARY WORK TO PROVIDE SUITABLE CONNECTIONS WITH ALL ROADS, STREETS, AND DRIVES ENTERING THIS PROJECT. THIS WORK WILL BE PAID FOR AT THE CONTRACT UNIT PRICE FOR THE PARTICULAR ITEMS INVOLVED.

GUARDRAIL:

THE GUARDRAIL LOCATIONS SHOWN ON THE PLANS MAY BE ADJUSTED DURING CONSTRUCTION AS DIRECTED BY THE ENGINEER. THE CONTRACTOR SHOULD CONSULT WITH THE ENGINEER PRIOR TO ORDERING GUARDRAIL MATERIAL.

TEMPORARY SHORING:

SHORING REQUIRED FOR THE MAINTENANCE OF TRAFFIC WILL BE PAID FOR AS "EXTRA WORK" IN ACCORDANCE WITH SECTION 104-7.

SUBSURFACE PLANS:

NO SUBSURFACE PLANS ARE AVAILABLE ON THIS PROJECT. THE CONTRACTOR SHOULD MAKE HIS OWN INVESTIGATION AS TO THE SUBSURFACE CONDITIONS.

UTILITIES:

UTILITY OWNERS ON THIS PROJECT ARE:

PHONE - WINDSTREAM COMMUNICATIONS
WATER - UNION COUNTY PUBLIC WORKS

ANY RELOCATION OF EXISTING UTILITIES WILL BE ACCOMPLISHED BY OTHERS, EXCEPT AS SHOWN ON THE PLANS.

2012 ROADWAY ENGLISH STANDARD DRAWINGS

EFF. 01-17-2012
REV. 10-30-2012

The following Roadway Standards as appear in "Roadway Standard Drawings" Highway Design Branch - N. C. Department of Transportation - Raleigh, N. C., Dated January, 2012 are applicable to this project and by reference hereby are considered a part of these plans:

STD.NO.	TITLE
DIVISION 2 - EARTHWORK	
200.02	Method of Clearing - Method II
225.02	Guide for Grading Subgrade - Secondary and Local
225.04	Method of Obtaining Superelevation - Two Lane Pavement
DIVISION 5 - SUBGRADE, BASES AND SHOULDERS	
560.01	Method of Shoulder Construction - High Side of Superelevated Curve - Method I
DIVISION 8 - INCIDENTALS	
862.01	Guardrail Placement
862.02	Guardrail Installation
862.03	Structure Anchor Units (Details in Lieu of Standard Drawing as March 2013 Letting)
DIVISION 11 - WORK ZONE TRAFFIC CONTROL	
1101.02	Temporary Lane Closures
1101.03	Temporary Road Closures
1101.11	Traffic Control Design Tables
1110.01	Stationary Work Zone Signs
1145.01	Barricades - Type III
1261.01	Guardrail and Barrier Delineator Spacing
1261.02	Guardrail and Barrier Delineator Types
1262.01	Guardrail End Delineation

INDEX OF SHEETS

SHEET NUMBER	SHEET
1	TITLE SHEET
1-A	INDEX OF SHEETS, GENERAL NOTES, AND LIST OF STANDARD DRAWINGS
1-B	CONVENTIONAL SYMBOLS
1-C	SURVEY CONTROL SHEET
2	PAVEMENT SCHEDULE AND TYPICAL SECTIONS
3	SUMMARIES OF EARTHWORK, PAVEMENT REMOVAL, AND GUARDRAIL
4	PLAN AND PROFILE SHEET
TCP-1	TRAFFIC CONTROL PLAN - DETOUR ROUTE
EC-1 THRU EC-4	EROSION CONTROL PLANS
UC-1 THRU UC-4	UTILITY CONSTRUCTION PLANS
UO-1 THRU UO-2	UTILITIES BY OTHERS PLANS
X-1 THRU X-2	CROSS-SECTIONS
C-1 THRU C-6	CULVERT PLANS

8/17/99
1/8/2013
8:25:24 AM
R:\Roadway\proj\8902068_rdy_ndx_1A.dgn

12/05/11

PROJECT REFERENCE NO.	SHEET NO.
12BPJ0.R.21	1-B

Note: Not to Scale

****S.U.E. = Subsurface Utility Engineering***

STATE OF NORTH CAROLINA
DIVISION OF HIGHWAYS

CONVENTIONAL PLAN SHEET SYMBOLS

BOUNDARIES AND PROPERTY:

- State Line
- County Line
- Township Line
- City Line
- Reservation Line
- Property Line
- Existing Iron Pin — EIP
- Property Corner
- Property Monument — ECM
- Parcel/Sequence Number — 123
- Existing Fence Line
- Proposed Woven Wire Fence
- Proposed Chain Link Fence
- Proposed Barbed Wire Fence
- Existing Wetland Boundary — WLB
- Proposed Wetland Boundary — WLB
- Existing Endangered Animal Boundary — EAB
- Existing Endangered Plant Boundary — EPB
- Known Soil Contamination: Area or Site
- Potential Soil Contamination: Area or Site

BUILDINGS AND OTHER CULTURE:

- Gas Pump Vent or U/G Tank Cap
- Sign — S
- Well — W
- Small Mine
- Foundation
- Area Outline
- Cemetery
- Building
- School
- Church
- Dam

HYDROLOGY:

- Stream or Body of Water
- Hydro, Pool or Reservoir
- Jurisdictional Stream — JS
- Buffer Zone 1 — BZ 1
- Buffer Zone 2 — BZ 2
- Flow Arrow
- Disappearing Stream
- Spring
- Wetland
- Proposed Lateral, Tail, Head Ditch — FLOW
- False Sump

RAILROADS:

- Standard Gauge — CSX TRANSPORTATION
- RR Signal Milepost — MILEPOST 35
- Switch — SWITCH
- RR Abandoned
- RR Dismantled

RIGHT OF WAY:

- Baseline Control Point
- Existing Right of Way Marker
- Existing Right of Way Line
- Proposed Right of Way Line — RW
- Proposed Right of Way Line with Iron Pin and Cap Marker — RW
- Proposed Right of Way Line with Concrete or Granite R/W Marker — RW
- Proposed Control of Access Line with Concrete C/A Marker — CA
- Existing Control of Access — CA
- Proposed Control of Access — CA
- Existing Easement Line — E
- Proposed Temporary Construction Easement — E
- Proposed Temporary Drainage Easement — TDE
- Proposed Permanent Drainage Easement — PDE
- Proposed Permanent Drainage / Utility Easement — DUE
- Proposed Permanent Utility Easement — PUE
- Proposed Temporary Utility Easement — TUE
- Proposed Aerial Utility Easement — AUE
- Proposed Permanent Easement with Iron Pin and Cap Marker

ROADS AND RELATED FEATURES:

- Existing Edge of Pavement
- Existing Curb
- Proposed Slope Stakes Cut — C
- Proposed Slope Stakes Fill — F
- Proposed Curb Ramp — CR
- Existing Metal Guardrail
- Proposed Guardrail
- Existing Cable Guiderail
- Proposed Cable Guiderail
- Equality Symbol
- Pavement Removal

VEGETATION:

- Single Tree
- Single Shrub
- Hedge
- Woods Line
- Orchard
- Vineyard — Vineyard

EXISTING STRUCTURES:

MAJOR:

- Bridge, Tunnel or Box Culvert — CONC
- Bridge Wing Wall, Head Wall and End Wall — CONC WW

MINOR:

- Head and End Wall — CONC HW
- Pipe Culvert
- Footbridge
- Drainage Box: Catch Basin, DI or JB — CB
- Paved Ditch Gutter
- Storm Sewer Manhole — S
- Storm Sewer — S

UTILITIES:

POWER:

- Existing Power Pole
- Proposed Power Pole
- Existing Joint Use Pole
- Proposed Joint Use Pole
- Power Manhole — P
- Power Line Tower
- Power Transformer
- U/G Power Cable Hand Hole
- H-Frame Pole
- Recorded U/G Power Line — P
- Designated U/G Power Line (S.U.E.*) — P

TELEPHONE:

- Existing Telephone Pole
- Proposed Telephone Pole
- Telephone Manhole — T
- Telephone Booth
- Telephone Pedestal — T
- Telephone Cell Tower
- U/G Telephone Cable Hand Hole — HH
- Recorded U/G Telephone Cable — T
- Designated U/G Telephone Cable (S.U.E.*) — T
- Recorded U/G Telephone Conduit — TC
- Designated U/G Telephone Conduit (S.U.E.*) — TC
- Recorded U/G Fiber Optics Cable — T FO
- Designated U/G Fiber Optics Cable (S.U.E.*) — T FO

WATER:

- Water Manhole — W
- Water Meter
- Water Valve
- Water Hydrant
- Recorded U/G Water Line — W
- Designated U/G Water Line (S.U.E.*) — W
- Above Ground Water Line — A/G Water

TV:

- TV Satellite Dish
- TV Pedestal — C
- TV Tower
- U/G TV Cable Hand Hole — HH
- Recorded U/G TV Cable — TV
- Designated U/G TV Cable (S.U.E.*) — TV
- Recorded U/G Fiber Optic Cable — TV FO
- Designated U/G Fiber Optic Cable (S.U.E.*) — TV FO

GAS:

- Gas Valve
- Gas Meter
- Recorded U/G Gas Line — G
- Designated U/G Gas Line (S.U.E.*) — G
- Above Ground Gas Line — A/G Gas

SANITARY SEWER:

- Sanitary Sewer Manhole
- Sanitary Sewer Cleanout
- U/G Sanitary Sewer Line — SS
- Above Ground Sanitary Sewer — A/G Sanitary Sewer
- Recorded SS Forced Main Line — FSS
- Designated SS Forced Main Line (S.U.E.*) — FSS

MISCELLANEOUS:

- Utility Pole
- Utility Pole with Base
- Utility Located Object
- Utility Traffic Signal Box — S
- Utility Unknown U/G Line — ?UTL
- U/G Tank; Water, Gas, Oil
- Underground Storage Tank, Approx. Loc. — UST
- A/G Tank; Water, Gas, Oil
- Geoenvironmental Boring
- U/G Test Hole (S.U.E.*)
- Abandoned According to Utility Records — AATUR
- End of Information — E.O.I.

PROJECT REFERENCE NO.	SHEET NO.
17BP.10.R.21	1-C
Location and Surveys	

SURVEY CONTROL SHEET
PRELIMINARY PLANS

BL

POINT	DESC.	NORTH	EAST	ELEVATION	L STATION	OFFSET
1	BL-1	435211.4810	1576799.3210	527.89	OUTSIDE PROJECT LIMITS	
2	BL-2	435450.2380	1576830.3380	529.64	12+31.41	14.83 LT
3	BL-3	435660.2800	1576878.5410	530.52	14+45.22	12.73 RT

L

TYPE	STATION	NORTH	EAST
POT	10+00.00	435218.5699	1576820.8266
PC	12+18.54	435435.9072	1576843.7485
PT	12+95.13	435512.1083	1576851.4462
POT	14+49.27	435665.5292	1576866.2626

DATUM DESCRIPTION

THE LOCALIZED COORDINATE SYSTEM DEVELOPED FOR THIS PROJECT IS BASED ON THE STATE PLANE COORDINATES ESTABLISHED BY NCDOT FOR MONUMENT "BL-2"
WITH NAD 83/NSRS 2007 STATE PLANE GRID COORDINATES OF
NORTHING: 435450.238(ft) EASTING: 1576830.338(ft)
ELEVATION: 529.64(ft)
THE AVERAGE COMBINED GRID FACTOR USED ON THIS PROJECT (GROUND TO GRID) IS: 0.999867
THE N.C. LAMBERT GRID BEARING AND LOCALIZED HORIZONTAL GROUND DISTANCE FROM "BL-2" TO -L- STATION 10+50.00 IS
S01°20'36.6"W 181.99 (ft)
ALL LINEAR DIMENSIONS ARE LOCALIZED HORIZONTAL DISTANCES
VERTICAL DATUM USED IS NAVD 88

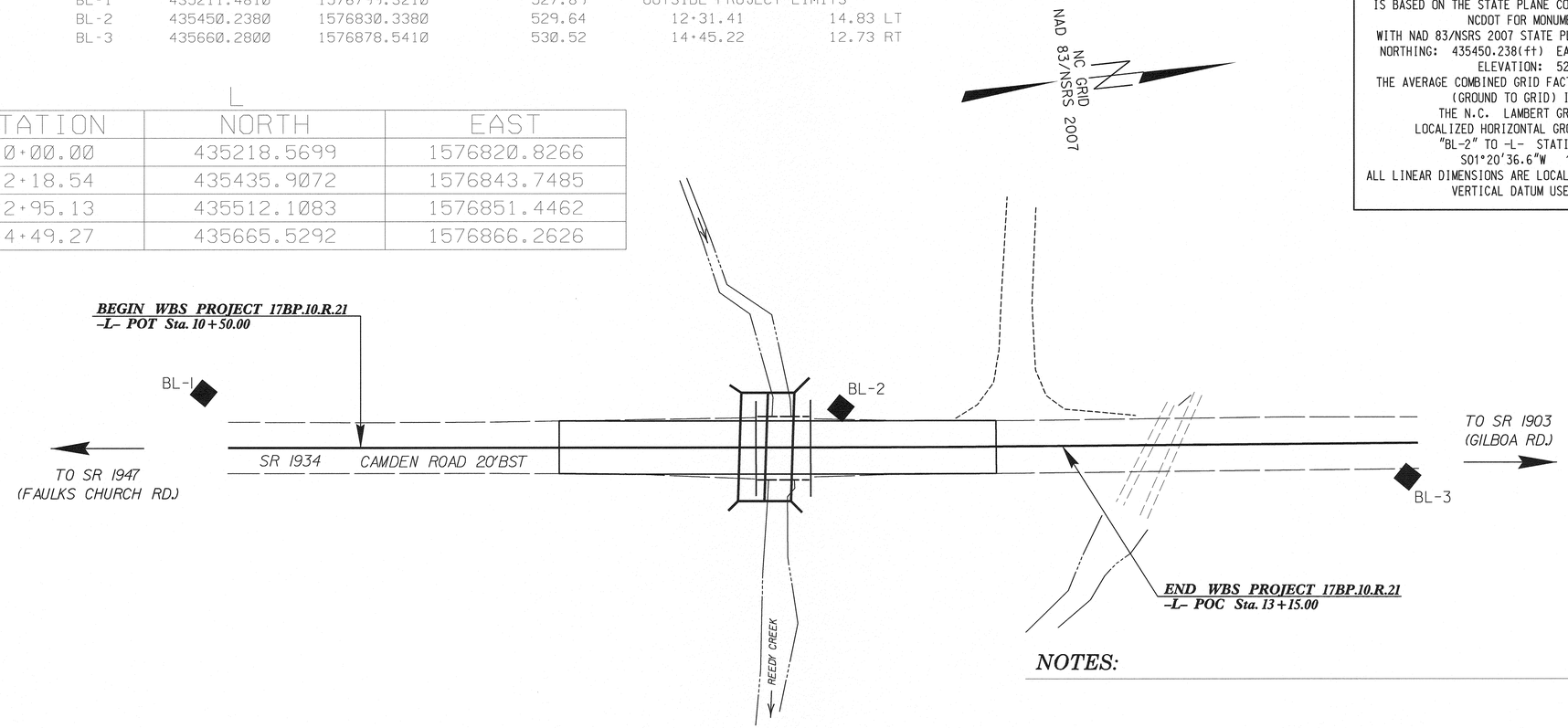

PERMANENT EASEMENT-E

ALIGN	STATION	OFFSET	NORTH	EAST
L	11+00.00	30.00	435314.8718	1576861.1497
L	11+25.00	40.00	435338.6850	1576873.7167
L	11+78.00	-30.00	435398.7347	1576809.6617
L	11+85.00	45.00	435397.8297	1576884.9822
L	11+88.00	-48.00	435410.5674	1576792.8098
L	11+90.00	62.00	435401.0191	1576902.4128
L	12+09.00	-48.00	435431.4516	1576795.0124
L	12+17.00	62.00	435427.8701	1576905.2447
L	12+30.00	30.00	435444.1948	1576874.7814
L	12+30.00	-30.00	435450.4093	1576815.1041

NOTE: DRAWING NOT TO SCALE

NOTES:

1. THE CONTROL DATA FOR THIS PROJECT CAN BE FOUND ELECTRONICALLY BY SELECTING PROJECT CONTROL DATA AT:
HTTP://WWW.NCDOT.ORG/DOH/PRECONSTRUCT/HIGHWAY/LOCATION/PROJECT/

THE FILES TO BE FOUND ARE AS FOLLOWS:
890088_LS_CONTROL.TXT

2. SITE CALIBRATION INFORMATION HAS NOT BEEN PROVIDED FOR THIS PROJECT. IF FURTHER INFORMATION IS NEEDED, PLEASE CONTACT THE LOCATION AND SURVEYS UNIT.

3. PROJECT CONTROL ESTABLISHED USING GLOBAL POSITIONING SYSTEM. POSITIONS ESTABLISHED USING NCGS REAL TIME KINEMATIC NETWORK (VRS)

MONUMENTS USED OR SET FOR PROJECT CONTROL BY THE NCDOT LOCATION AND SURVEYS UNIT:

- ● INDICATES GEODETIC CONTROL MONUMENTS FOR HORIZONTAL CONTROL
- ■ INDICATES BASELINE MONUMENTS FOR HORIZONTAL PROJECT CONTROL
- ⧓ INDICATES BENCHMARKS FOR VERTICAL PROJECT CONTROL

9/12/2012 TBL
1/17/2013
5:16:29 PM
C:\pwworking\proj\890088_ls_1c.dgn

PROJECT REFERENCE NO.	SHEET NO.
17BP.10.R.21	2
R/W SHEET NO.	
ROADWAY DESIGN ENGINEER	PAVEMENT DESIGN ENGINEER
NORTH CAROLINA PROFESSIONAL SEAL 19724 ENGINEER DAVID BURKE EVANS 1/18/13	PAVEMENT DESIGN PROVIDED BY NCDOT

M A Engineering Consultants, Inc.
598 East Chatham Street Suite 137 Cary, NC 27511
Phone: 919.297.0220 Fax: 919.297.0221

PAVEMENT SCHEDULE

C1	PROP. APPROX. 1.5" ASPHALT CONCRETE SURFACE COURSE, TYPE S9.5B, AT AN AVERAGE RATE OF 168.0 Lbs PER SQUARE YARD.
D1	PROP. APPROX. 2.5" ASPHALT CONCRETE INTERMEDIATE COURSE, TYPE I19.5B, AT AN AVERAGE RATE OF 285.0 Lbs PER SQUARE YARD.
E1	PROP. APPROX. 4.0" ASPHALT CONCRETE BASE COURSE, TYPE B25.0B, AT AN AVERAGE RATE OF 456 Lbs PER SQUARE YARD.
T	EARTH MATERIAL
U	EXISTING PAVEMENT

PAVEMENT EDGE SLOPES AND TRENCH SLOPES ARE 1:1 UNLESS SHOWN OTHERWISE.

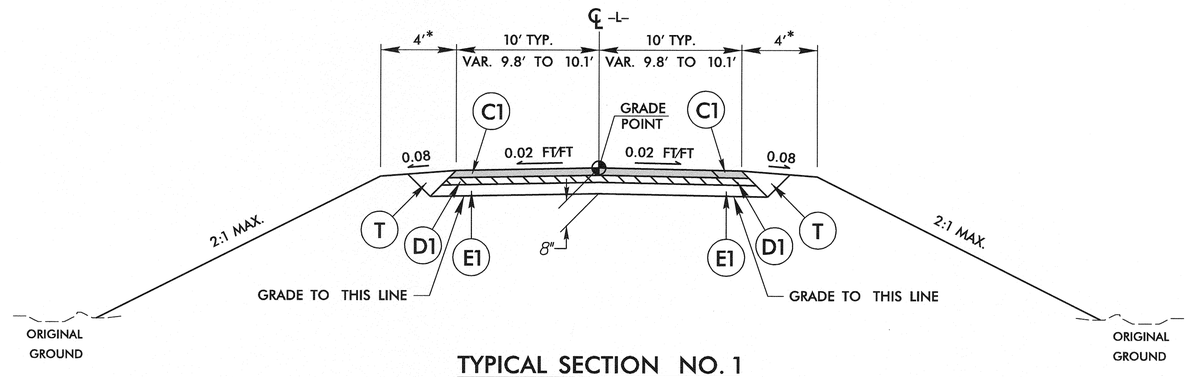

TYPICAL SECTION NO. 1

FROM -L- STA. 11+25.00 TO STA. 12+90.00

NOTES

* – 7' WITH GUARDRAIL (FACE GR MIN. 4' FROM EOP)

NOTE: INCIDENTAL MILL 1.5" IN DEPTH AT EACH TIE-IN TO PROVIDE A SMOOTH TRANSITION TO THE EXISTING ASPHALT PAVEMENT (AS DIRECTED BY THE ENGINEER)

8/2/99

4/24/06

COMPUTED BY: KSH	DATE: 9-26-2012
CHECKED BY: DBE	DATE: 12-7-2012

STATE OF NORTH CAROLINA
DIVISION OF HIGHWAYS

PROJECT REFERENCE NO.	SHEET NO.
17BP.10.R.21	3

M A Engineering Consultants, Inc.
598 East Chatham Street Suite 137 Cary, NC 27511
Phone: 919.297.0220 Fax: 919.297.0221

SUMMARY OF EARTHWORK

IN CUBIC YARDS

LOCATION	UNCLASSIFIED EXCAVATION	UNDERCUT	EMBT+%	BORROW	WASTE
-L- 11+00.00 TO 13+15.00	96		103	7	
TOTAL	96		103	7	
LOSS DUE TO CLEARING AND GRUBBING	-20			20	
PROJECT TOTAL	76		103	27	
ESTIMATED 5% TO REPLACE TOPSOIL ON BORROW PIT				2	
GRAND TOTAL	76		103	29	
SAY	100			100	
ESTIMATED DRAINAGE DITCH EXCAVATION = 40 CY					

APPROXIMATE QUANTITIES ONLY. CLEARING AND GRUBBING, UNCLASSIFIED EXCAVATION, BORROW EXCAVATION, FINE GRADING, AND REMOVAL OF EXISTING PAVEMENT WILL BE PAID FOR AT THE CONTRACT LUMP SUM PRICE FOR "GRADING".

NOTE: Earthwork quantities are calculated by the Roadway Design Unit. These earthwork quantities are based in part on subsurface data provided by the Geotechnical Engineering Unit.

SUMMARY OF PAVEMENT REMOVAL

IN SQUARE YARDS

LOCATION	ASPHALT REMOVAL	ASPHALT BREAK-UP	CONCRETE REMOVAL	CONCRETE BREAK-UP
-L- STA. 11+25 TO 11+99	175			
-L- STA. 12+20 TO 12+90	160			
GRAND TOTAL	335			
SAY	340			

TOTAL SHOULDER WIDTH = DISTANCE FROM EDGE OF TRAVEL LANE TO SHOULDER BREAK POINT.
FLARE LENGTH = DISTANCE FROM LAST SECTION OF PARALLEL GUARDRAIL TO END OF GUARDRAIL.
W = TOTAL WIDTH OF FLARE FROM BEGINNING OF TAPER TO END OF GUARDRAIL.
G = GATING IMPACT ATTENUATOR TYPE 350
NG = NON-GATING IMPACT ATTENUATOR TYPE 350

GUARDRAIL SUMMARY

SURVEY LINE	BEG. STA.	END STA.	LOCATION	LENGTH			WARRANT POINT		"N" DIST. FROM E.O.L.	TOTAL SHOUL. WIDTH	FLARE LENGTH		W		ANCHORS								IMPACT ATTENUATOR TYPE 350			SINGLE FACED GUARDRAIL	REMOVE EXISTING GUARDRAIL	REMOVE AND STOCKPILE EXISTING GUARDRAIL	REMARKS
				STRAIGHT	SHOP CURVED	DOUBLE FACED	APPROACH END	TRAILING END			APPROACH END	TRAILING END	APPROACH END	TRAILING END	XI MOD	XI	GRAU 350 TL-3	M-350	TYPE III	CAT-1	VI MOD	BIC	AT-1	EA	G	NG				
-L-	11+25.00	12+75.00	LT	150.00			12+20.00	11+89.00	4	7	50.00		1				2													
-L-	11+25.00	12+87.50	RT	162.50			12+20.00	12+17.00	4	7		50.00		1			2													
			TOTAL:	312.50										TOTAL:			4													
			TOTAL ANCHOR LENGTH:	200.00																										
			TOTAL GUARDRAIL LENGTH:	112.50																										
			SAY:	112.50																										

PROJECT REFERENCE NO.	SHEET NO.
17BP.10.R.21	4
R/W SHEET NO.	

ROADWAY DESIGN ENGINEER: NORTH CAROLINA PROFESSIONAL SEAL 19724 ENGINEER DAVID BURKE EVANS 7/16/13

HYDRAULICS ENGINEER: NORTH CAROLINA PROFESSIONAL SEAL 21656 ENGINEER ROGER S. WEADON 7/16/13

MA Engineering CONSULTANTS, INC.
598 East Chatham Street Suite 137 Cary, NC 27511
Phone: 919.297.0220 Fax: 919.297.0221

REVISIONS

8/17/99

DETAIL 1
LATERAL 'V' DITCH
(Not to Scale)

FROM -L- STA. 10+50 TO STA. 12+00 RT

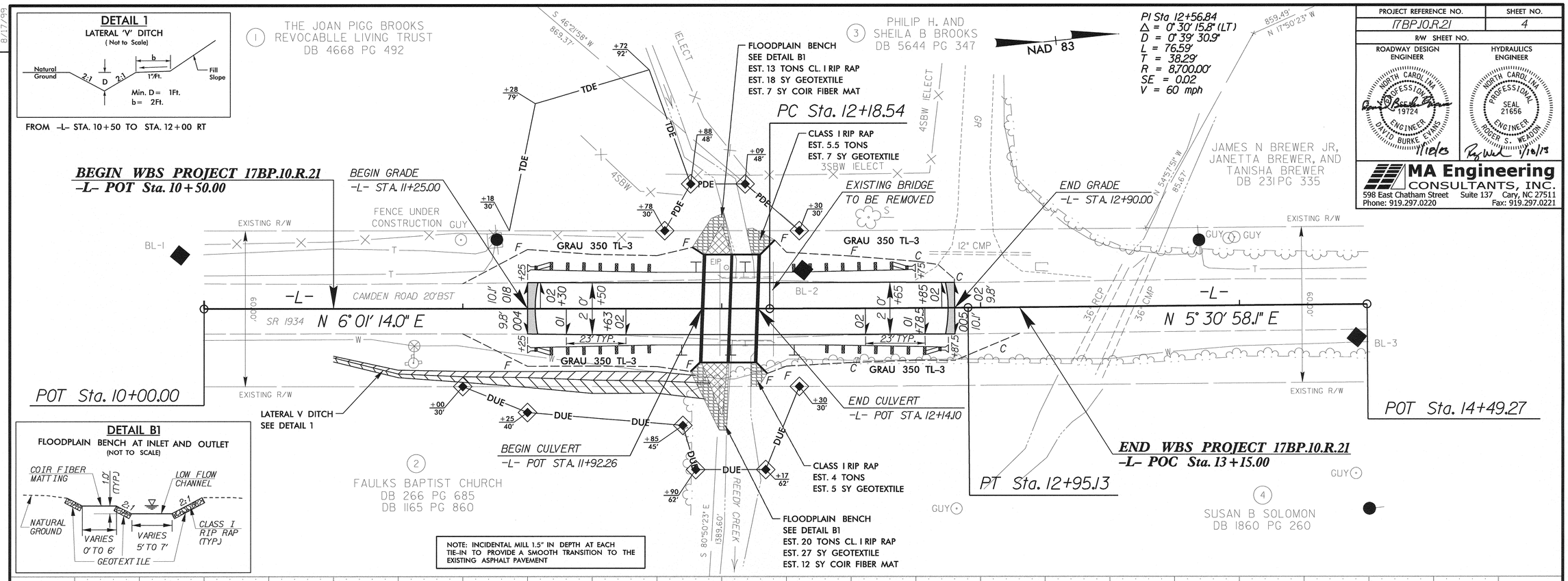

DETAIL B1
FLOODPLAIN BENCH AT INLET AND OUTLET
(NOT TO SCALE)

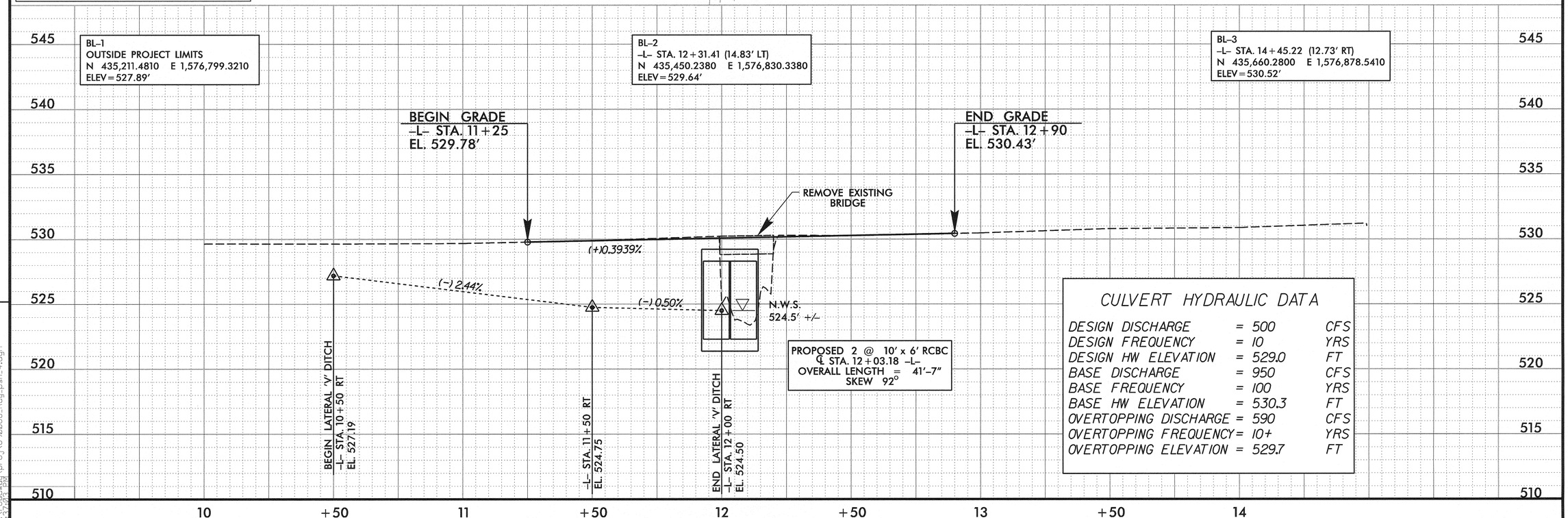

CULVERT HYDRAULIC DATA

DESIGN DISCHARGE	=	500	CFS
DESIGN FREQUENCY	=	10	YRS
DESIGN HW ELEVATION	=	529.0	FT
BASE DISCHARGE	=	950	CFS
BASE FREQUENCY	=	100	YRS
BASE HW ELEVATION	=	530.3	FT
OVERTOPPING DISCHARGE	=	590	CFS
OVERTOPPING FREQUENCY	=	10+	YRS
OVERTOPPING ELEVATION	=	529.7	FT

7/17/2013
R:\Roadway\Proj\8920088_Rdy_psh_4.dgn

PROJECT REFERENCE NO.	SHEET NO.
17BPJ0.R.21	TCP-1

M A Engineering Consultants, Inc.
598 East Chatham Street Suite 137 Cary, NC 27511
Phone: 919.297.0220 Fax: 919.297.0221

DETOUR ROUTE

USE STD. DWG. NO. 1101.03 (SHEET 1 OF 9) FOR TEMPORARY ROAD CLOSURE (CLOSURE BEYOND DETOUR POINT).
CONTRACTOR WILL BE RESPONSIBLE FOR PLACEMENT AND MAINTENANCE OF ALL DETOUR SIGNAGE AND BARRICADES.

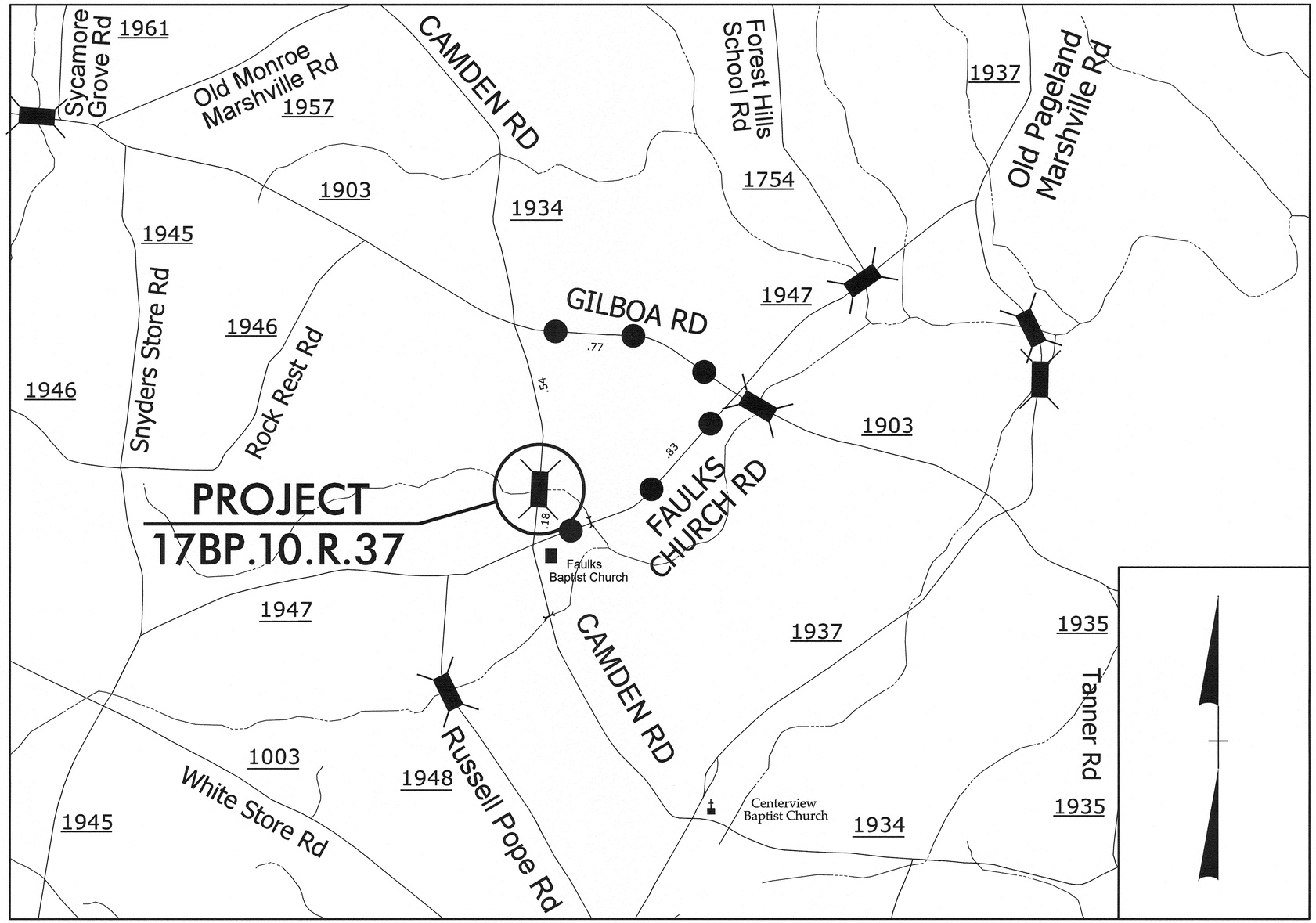

1000 500 0 1000 2000

5/14/99
1/17/2013
r:\roadway\proj\b20288_rdy_psh_tcp1.dgn

PROJECT: 17BP.10.R.21

STATE	STATE PROJECT REFERENCE NO.	SHEET NO.	TOTAL SHEETS
N.C.	17BP.10.R.21	EC-1	

STATE PROJ. NO.	F. A. PROJ. NO.	DESCRIPTION

See Sheet 1-A For Index of Sheets
See Sheet 1-B For Symbology

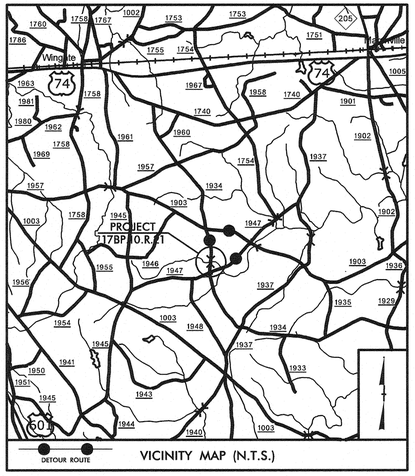

VICINITY MAP (N.T.S.)

STATE OF NORTH CAROLINA
DIVISION OF HIGHWAYS

PLAN FOR PROPOSED
HIGHWAY EROSION CONTROL

LOCATION: BRIDGE #88 OVER REEDY CREEK ON SR 1934 (CAMDEN RD.)

TYPE OF WORK: GRADING, DRAINAGE, PAVING, AND STRUCTURE

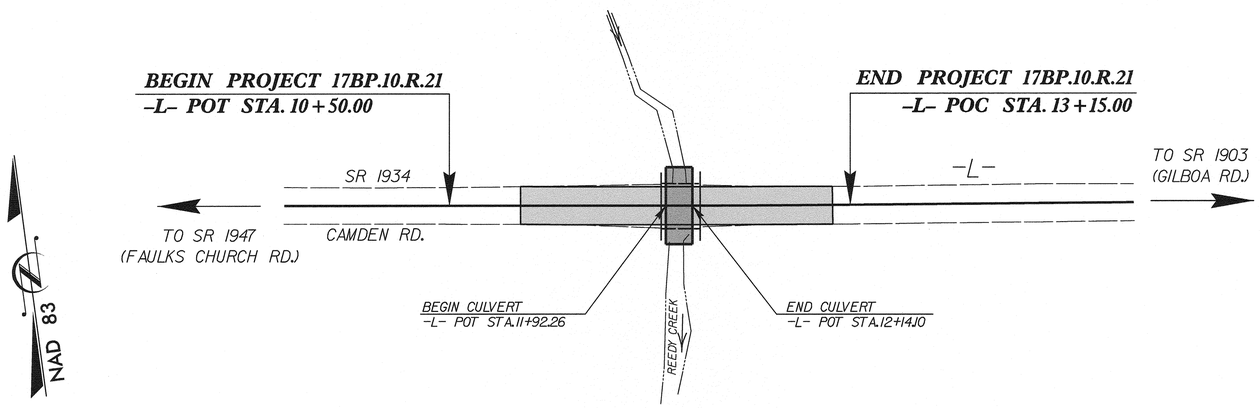

EROSION AND SEDIMENT CONTROL MEASURES

Std. #	Description	Symbol
1630.03	Temporary Silt Ditch	TSD
1630.05	Temporary Diversion	TD
1605.01	Temporary Silt Fence	
1606.01	Special Sediment Control Fence	
1622.01	Temporary Berms and Slope Drains	
1630.02	Silt Basin Type B	
1633.01	Temporary Rock Silt Check Type-A	
	Temporary Rock Silt Check Type-A with Matting and Polyacrylamide (PAM)	
1633.02	Temporary Rock Silt Check Type-B	
	Wattle / Coir Fiber Wattle	EW CFW
	Wattle / Coir Fiber Wattle with Polyacrylamide (PAM)	
1634.01	Temporary Rock Sediment Dam Type-A	
1634.02	Temporary Rock Sediment Dam Type-B	
1635.01	Rock Pipe Inlet Sediment Trap Type-A	
1635.02	Rock Pipe Inlet Sediment Trap Type-B	
1630.04	Stilling Basin	
1630.06	Special Stilling Basin	
	Rock Inlet Sediment Trap:	
1632.01	Type A	A
1632.02	Type B	B
1632.03	Type C	C
	Skimmer Basin	
	Tiered Skimmer Basin	
	Infiltration Basin	

THIS PROJECT CONTAINS EROSION CONTROL PLANS FOR CLEARING AND GRUBBING PHASE OF CONSTRUCTION.

ROGER WEADON, P.E.
LEVEL IIIA NAME

619
LEVEL IIIA CERTIFICATION NO.

GRAPHIC SCALE

0
PLANS

0
PROFILE (HORIZONTAL)

0
PROFILE (VERTICAL)

ROADSIDE ENVIRONMENTAL UNIT
DIVISION OF HIGHWAYS
STATE OF NORTH CAROLINA

NORTH CAROLINA PROFESSIONAL SEAL 21656 ENGINEER ROGER S. WEADON

1/28/13

THESE EROSION AND SEDIMENT CONTROL PLANS COMPLY WITH THE REGULATIONS SET FORTH BY THE NCG-010000 GENERAL CONSTRUCTION PERMIT EFFECTIVE AUGUST 3, 2011 ISSUED BY THE NORTH CAROLINA DEPARTMENT OF ENVIRONMENT AND NATURAL RESOURCES DIVISION OF WATER QUALITY.

Prepared In the Office of:

M A Engineering Consultants, Inc.
598 East Chatham Street - Suite 137
Cary, NC 27511
Phone: 919.297.0220 Fax: 919.297.0221

2012 STANDARD SPECIFICATIONS

Roadway Standard Drawings

The following roadway english standards as appear in "Roadway Standard Drawings"– Roadway Design Unit – N. C. Department of Transportation – Raleigh, N. C., dated January 2012 and the latest revison thereto are applicable to this project and by reference hereby are considered a part of these plans.

1604.01	Railroad Erosion Control Detail	1632.01	Rock Inlet Sediment Trap Type A
1605.01	Temporary Silt Fence	1632.02	Rock Inlet Sediment Trap Type B
1606.01	Special Sediment Control Fence	1632.03	Rock Inlet Sediment Trap Type C
1607.01	Gravel Construction Entrance	1633.01	Temporary Rock Silt Check Type A
1622.01	Temporary Berms and Slope Drains	1633.02	Temporary Rock Silt Check Type B
1630.01	Riser Basin	1634.01	Temporary Rock Sediment Dam Type A
1630.02	Silt Basin Type B	1634.02	Temporary Rock Sediment Dam Type B
1630.03	Temporary Silt Ditch	1635.01	Rock Pipe Inlet Sediment Trap Type A
1630.04	Stilling Basin	1635.02	Rock Pipe Inlet Sediment Trap Type B
1630.05	Temporary Diversion	1640.01	Coir Fiber Baffle
1630.06	Special Stilling Basin	1645.01	Temporary Stream Crossing
1631.01	Matting Installation		

r:\1/8/2013
R:\Roadway\17BP.10.R.21_EC\D90088_EC_tsh.dgn

PROJECT REFERENCE NO.	SHEET NO.
17BP.10.R.21	EC–2

M A Engineering Consultants, Inc.
598 East Chatham Street Suite 137 Cary, NC 27511
Phone: 919.297.0220 Fax: 919.297.0221

WATTLE WITH POLYACRYLAMIDE (PAM) DETAIL

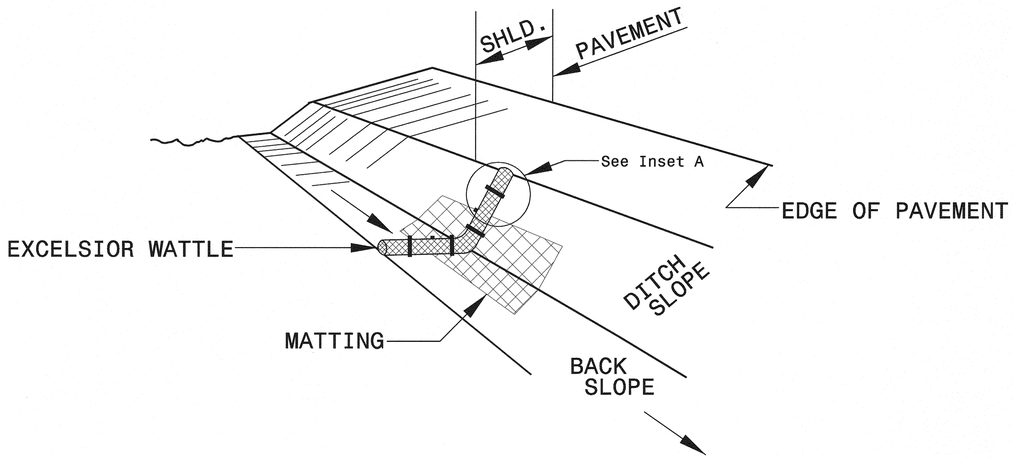

ISOMETRIC VIEW

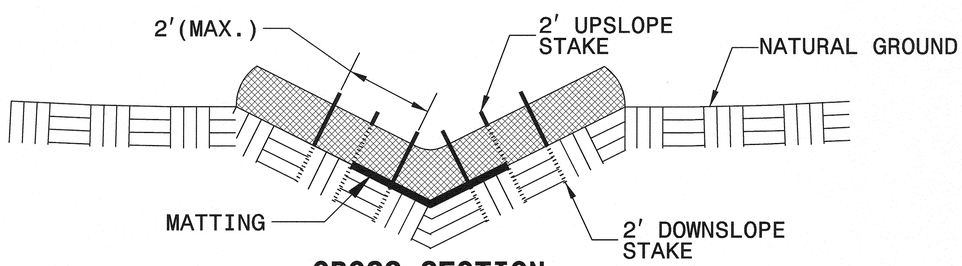

CROSS SECTION VEE DITCH

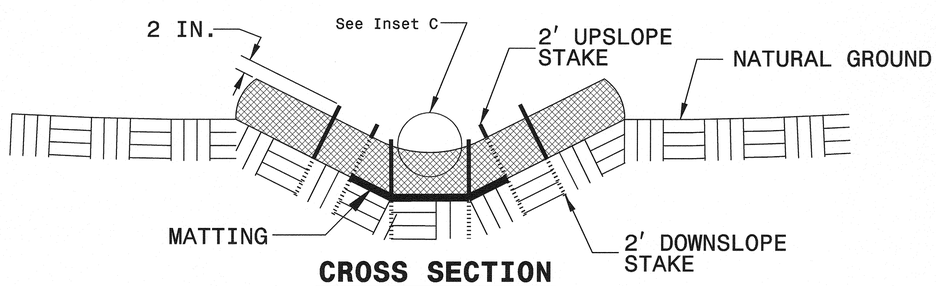

CROSS SECTION TRAPEZOIDAL DITCH

NOTES:

USE MINIMUM 12 IN. DIAMETER EXCELSIOR WATTLE.

USE 2 FT. WOODEN STAKES WITH A 2 IN. BY 2 IN. NOMINAL CROSS SECTION.

ONLY INSTALL WATTLE(S) TO A HEIGHT IN DITCH SO FLOW WILL NOT WASH AROUND WATTLE AND SCOUR DITCH SLOPES AND AS DIRECTED.

INSTALL A MINIMUM OF 2 UPSLOPE STAKES AND 4 DOWNSLOPE STAKES AT AN ANGLE TO WEDGE WATTLE TO BOTTOM OF DITCH.

PROVIDE STAPLES MADE OF 0.125 IN. DIAMETER STEEL WIRE FORMED INTO A U SHAPE NOT LESS THAN 12″ IN LENGTH.

INSTALL STAPLES APPROXIMATELY EVERY 1 LINEAR FOOT ON BOTH SIDES OF WATTLE AND AT EACH END TO SECURE IT TO THE SOIL.

INSTALL MATTING IN ACCORDANCE WITH SECTION 1631 OF THE STANDARD SPECIFICATIONS.

PRIOR TO POLYACRYLAMIDE (PAM) APPLICATION, OBTAIN A SOIL SAMPLE FROM PROJECT LOCATION, AND FROM OFFSITE MATERIAL, AND ANALYZE FOR APPROPRIATE PAM FLOCCULANT TO BE APPLIED TO EACH WATTLE.

INITIALLY APPLY 2 OUNCES OF ANIONIC OR NEUTRALLY CHARGED PAM OVER WATTLE WHERE WATER WILL FLOW AND 1 OUNCE OF PAM ON MATTING ON EACH SIDE OF WATTLE. REAPPLY PAM AFTER EVERY RAINFALL EVENT THAT IS EQUAL TO OR EXCEEDS 0.50 IN.

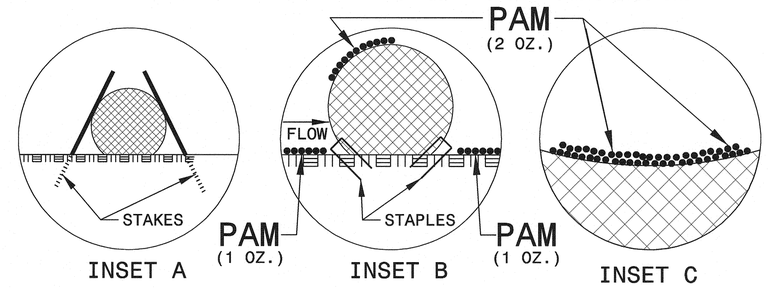

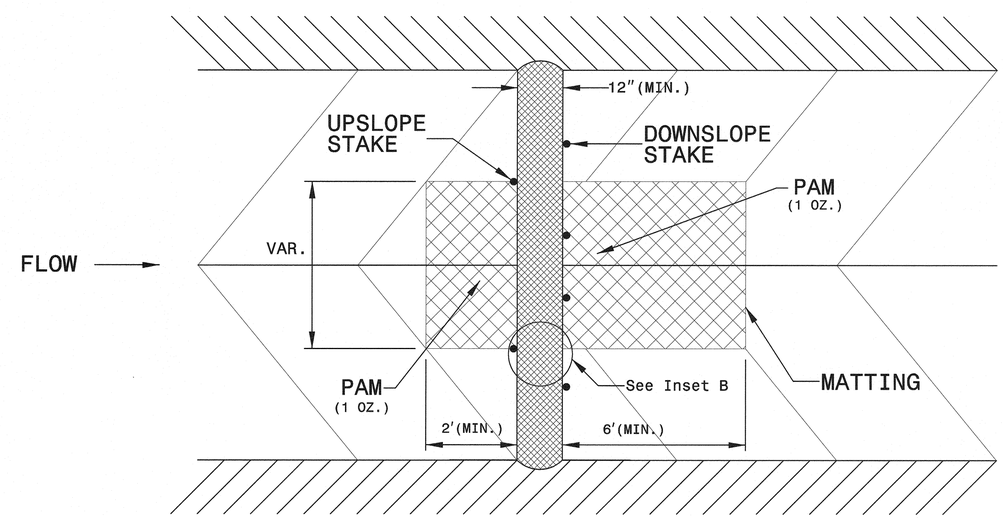

TOP VIEW

REVISIONS

8/17/99

1/17/2013
R:\Roadways\Details\EC\890288_EC_psh2_2A.dgn
8:37:43 PM

7/2/99

PROJECT REFERENCE NO.	SHEET NO.
17BP.10.R.21	EC-2A

M A Engineering Consultants, Inc.
598 East Chatham Street Suite 137 Cary, NC 27511
Phone: 919.297.0220 Fax: 919.297.0221

SILT FENCE WATTLE BREAK DETAIL

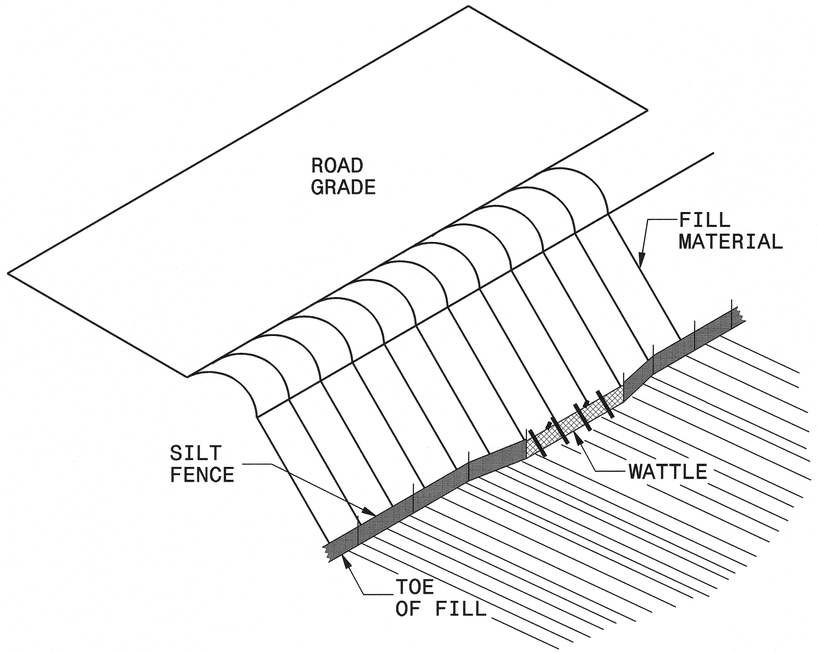

ISOMETRIC VIEW

NOTES:

USE MINIMUM 12 IN. DIAMETER EXCELSIOR WATTLE AND LENGTH OF 10 FT.

EXCAVATE A 1 TO 2 INCH TRENCH FOR WATTLE TO BE PLACED.

DO NOT PLACE WATTLE ON TOE OF SLOPE.

USE 2 FT. WOODEN STAKES WITH A 2 IN. BY 2 IN. NOMINAL CROSS SECTION.

INSTALL A MINIMUM OF 2 UPSLOPE STAKES AND 4 DOWNSLOPE STAKES AT AN ANGLE TO WEDGE WATTLE TO GROUND.

PROVIDE STAPLES MADE OF 0.125 IN. DIAMETER STEEL WIRE FORMED INTO A U SHAPE NOT LESS THAN 12″ IN LENGTH.

INSTALL STAPLES APPROXIMATELY EVERY 1 LINEAR FOOT ON BOTH SIDES OF WATTLE AND AT EACH END TO SECURE IT TO THE SOIL.

WATTLE INSTALLATION CAN BE ON OUTSIDE OF THE SILT FENCE AS DIRECTED.

INSTALL TEMPORARY SILT FENCE IN ACCORDANCE WITH SECTION 1605 OF THE STANDARD SPECIFICATIONS.

INSET A

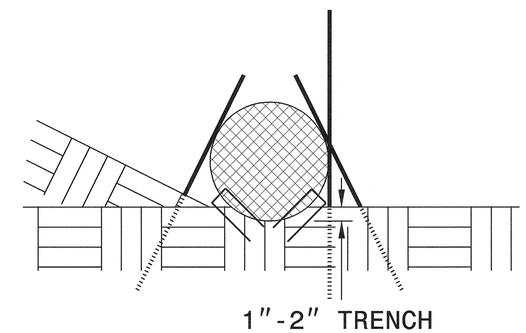

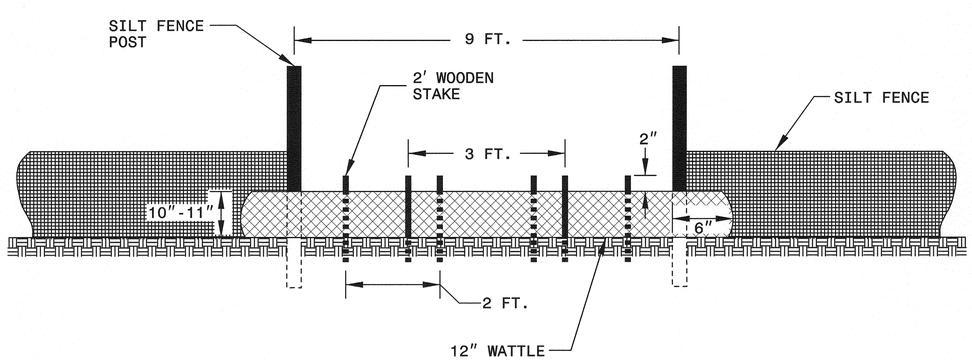

VIEW FROM SLOPE

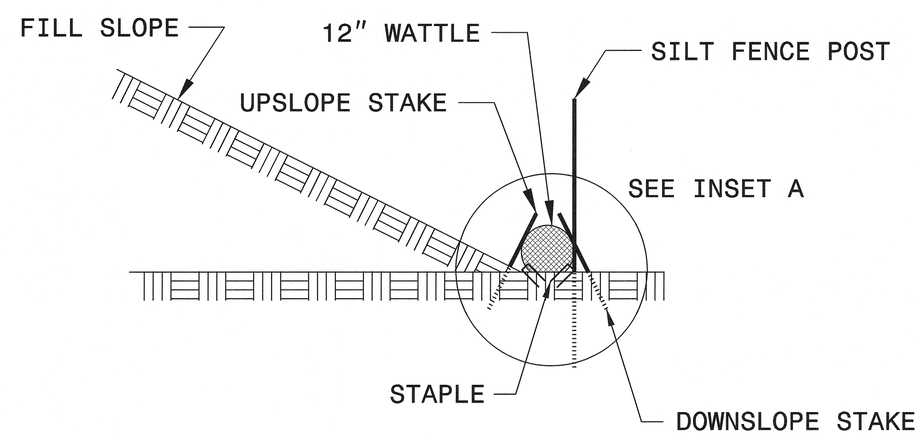

SIDE VIEW

PROJECT REFERENCE NO.	SHEET NO.
17BP.10.R.21	EC-2B

HYDRAULICS ENGINEER

NORTH CAROLINA PROFESSIONAL SEAL 21656 ENGINEER ROGER S. WEADON

1/10/13

CULVERT CONSTRUCTION SEQUENCE

PHASE 1

1. REMOVE EXISTING BRIDGE
2. CONSTRUCT STILLING BASIN TO SIZE SPECIFIED AND AT LOCATION AS SHOWN.
3. INSTALL TEMPORARY IMPERVIOUS DIKE (CONSTRUCTED OF SAND BAGS) ALONG SOUTHERN BANK OF STREAM AS SHOWN.
4. CONSTRUCT PROPOSED CULVERT SOUTHERN CELL (BARREL 1) AS SHOWN WITHOUT FLOODWAY BENCHES.

PHASE 2

1. REMOVE TEMPORARY IMPERVIOUS DIKE AROUND SOUTHERN CELL (BARREL 1) CONSTRUCTED IN STEP 1.
2. CONSTRUCT TEMPORARY DIVERSION CHANNEL INTO AND OUT OF SOUTHERN CELL (BARREL 1). USE A MINIMUM CHANNEL BOTTOM WIDTH OF 9' WITH 2:1 MAX SIDE SLOPES.
3. INSTALL TEMPORARY DIKES TO DIVERT STREAM FLOW THROUGH SOUTHERN CELL (BARREL 1) AS SHOWN
4. CONSTRUCT THE PROPOSED MAIN CULVERT CELL (BARREL 2) AS SHOWN. ONCE BUILT STABILIZE INLET AND OUTLET SLOPES BEFORE PHASE 3.

PHASE 3

1. DIVERT THE STREAM BACK TO THE MAIN BARREL CELL (BARREL 2) USING TEMPORARY IMPERVIOUS DIKES
2. CONSTRUCT THE ROCK INLET SILL AT ENTRANCE AND EXIT OF SOUTHERN CELL (BARREL 1).
3. CONSTRUCT THE FLOODWAY BENCHES ON DOWNSTREAM AND UPSTREAM SIDES OF SOUTHERN CELL (BARREL 1).
4. REMOVE TEMPORARY DIKE AND STILLING BASIN.

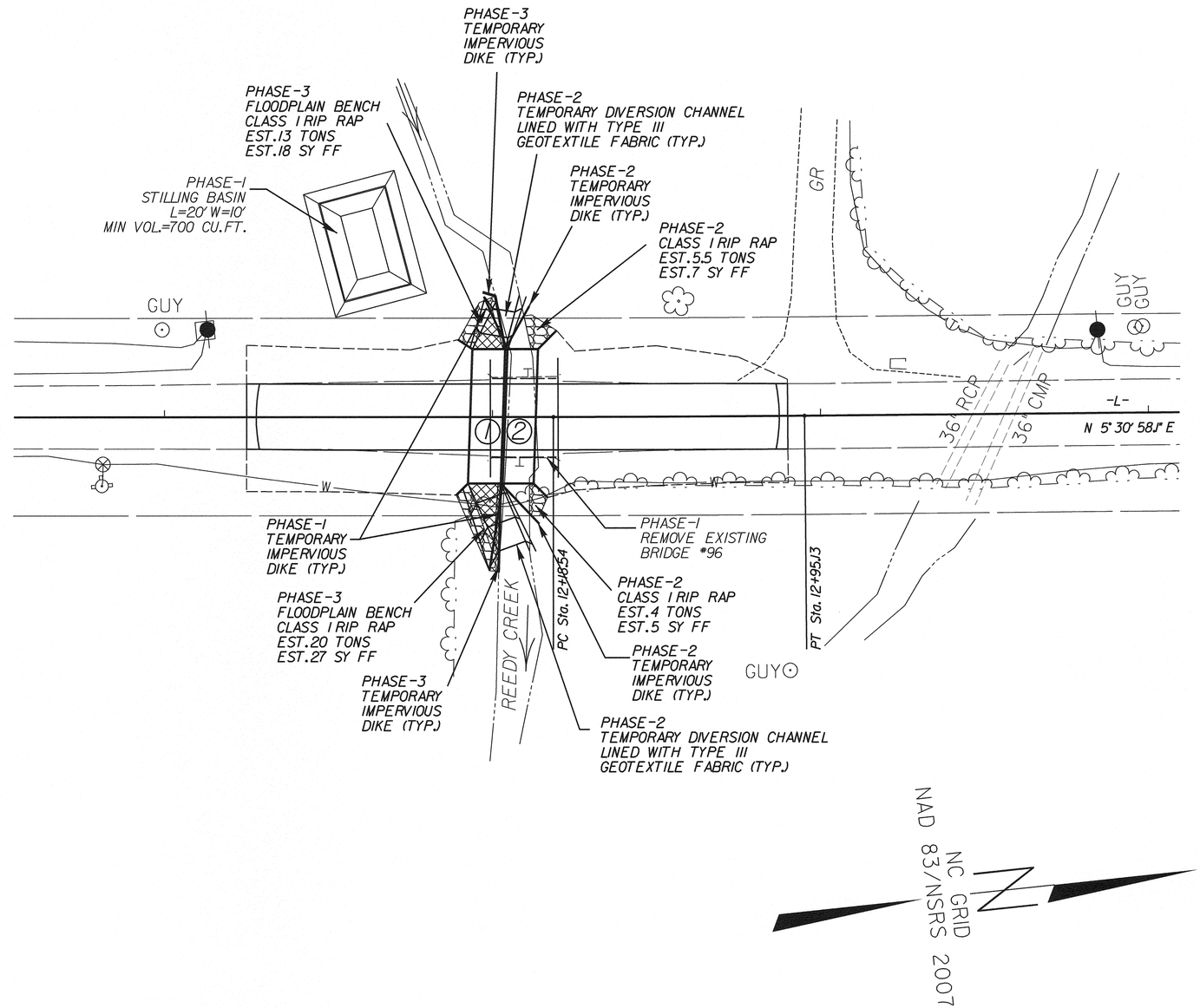

REVISIONS

8/17/99

1/7/2013
R:\Roadways\Divisions\Hydraulics\EC\B90088_EC_psh2B.dgn
BY: BJ

7/2/99

PROJECT REFERENCE NO.	SHEET NO.
17BP.10.R.21	EC-3

M A Engineering Consultants, Inc.
598 East Chatham Street Suite 137 Cary, NC 27511
Phone: 919.297.0220 Fax: 919.297.0221

DIVISION OF HIGHWAYS
STATE OF NORTH CAROLINA

SOIL STABILIZATION SUMMARY SHEET

MATTING FOR EROSION CONTROL

CONST SHEET NO.	LINE	FROM STATION	TO STATION	SIDE	ESTIMATE (SY)
4	L	10+50	12+00	RT	110
4	L	11+15	12+00	LT	70
				SUBTOTAL	180
MISCELLANEOUS MATTING TO BE INSTALLED AS DIRECTED BY THE ENGINEER					800
				TOTAL	980
				SAY	1,025

NOTE: MISCELLANEOUS MATTING INCLUDES ESTIMATE OF TOTAL DISTURBED AREA

PERMANENT SOIL REINFORCEMENT MAT

CONST SHEET NO.	LINE	FROM STATION	TO STATION	SIDE	ESTIMATE (SY)
			SUBTOTAL		0
		ADDITIONAL PSRM TO BE INSTALLED			0
				TOTAL	0
				SAY	0

7/2/99

PROJECT REFERENCE NO.	SHEET NO.
17BP.10.R.21	EC-3A

M A Engineering Consultants, Inc.
598 East Chatham Street Suite 137 Cary, NC 27511
Phone: 919.297.0220 Fax: 919.297.0221

DIVISION OF HIGHWAYS
STATE OF NORTH CAROLINA

SOIL STABILIZATION TIMEFRAMES

SITE DESCRIPTION	STABILIZATION TIME	TIMEFRAME EXCEPTIONS
PERIMETER DIKES, SWALES, DITCHES AND SLOPES	7 DAYS	NONE
HIGH QUALITY WATER (HQW) ZONES	7 DAYS	NONE
SLOPES STEEPER THAN 3:1	7 DAYS	IF SLOPES ARE 10' OR LESS IN LENGTH AND ARE NOT STEEPER THAN 2:1, 14 DAYS ARE ALLOWED.
SLOPES 3:1 OR FLATTER	14 DAYS	7 DAYS FOR SLOPES GREATER THAN 50' IN LENGTH.
ALL OTHER AREAS WITH SLOPES FLATTER THAN 4:1	14 DAYS	NONE, EXCEPT FOR PERIMETERS AND HQW ZONES.

PROJECT REFERENCE NO.	SHEET NO.
17BP.10.R.21	EC-4

HYDRAULICS ENGINEER

NORTH CAROLINA PROFESSIONAL SEAL 21656 ENGINEER ROGER S. WEADON

1/16/13

Place Matting for Erosion Control on Slope as Work Allows.

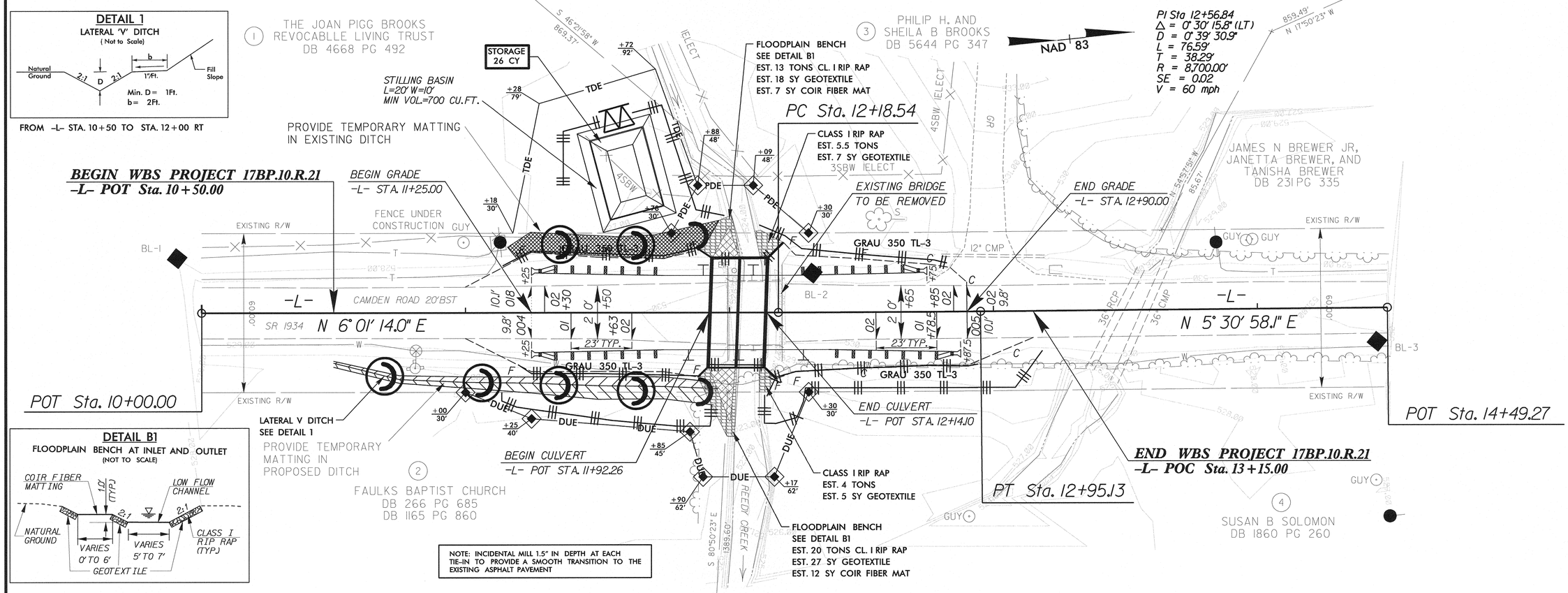

REVISIONS

8/17/99

1/17/2013
S:\Hydraulics\EC\890088_EC_psh4.dgn

09/08/99

TIP PROJECT: 17BP.10.R.21

T.I.P. NO.	SHEET NO.
17BP.10.R.21	UC–1

STATE OF NORTH CAROLINA
DIVISION OF HIGHWAYS

UTILITY CONSTRUCTION PLANS
UNION COUNTY

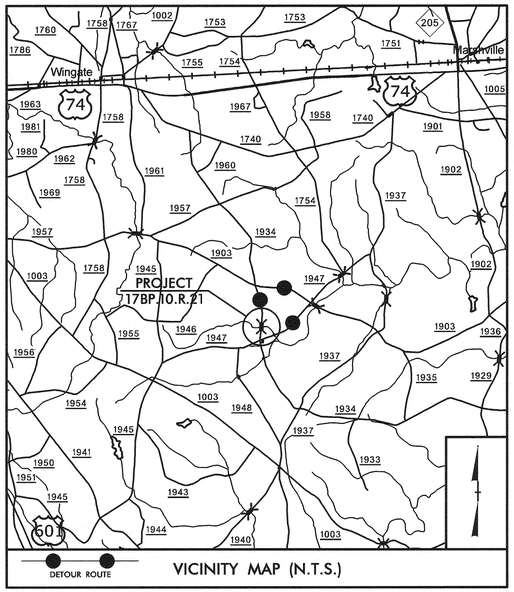

LOCATION: BRIDGE #88 OVER REEDY CREEK ON SR 1934 (CAMDEN RD.)

TYPE OF WORK: WATER LINE RELOCATION

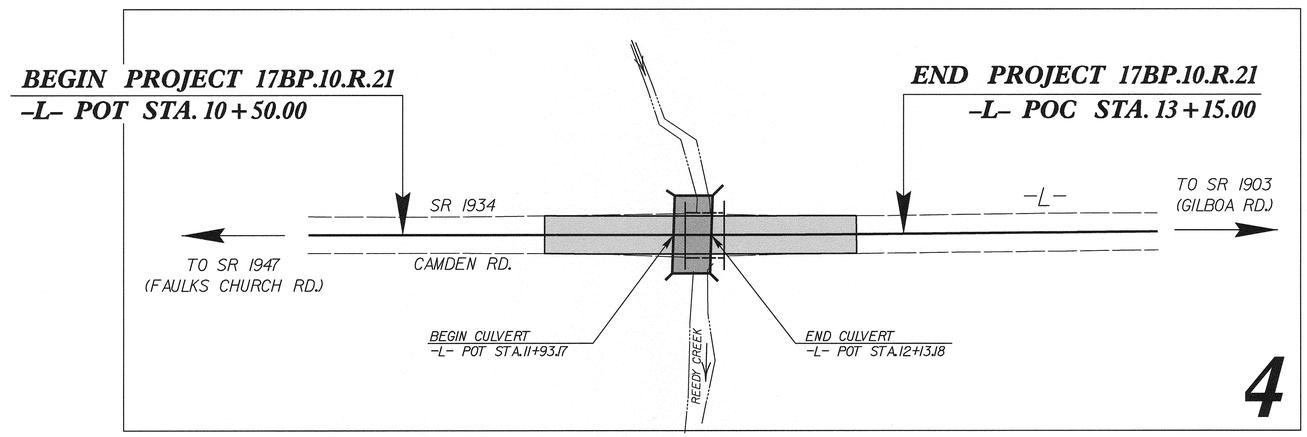

GRAPHIC SCALES

20 10 0 20 40
PLANS

20 10 0 20 40
PROFILE (HORIZONTAL)

4 2 0 4 8
PROFILE (VERTICAL)

INDEX OF SHEETS

SHEET NO.	DESCRIPTION
UC–1	TITLE SHEET
UC–2	UTILITY SYMBOLOGY
UC–3	NOTES
UC–3A UC–3C	DETAILS
UC–4	PLAN & PROFILE SHEET

WATER AND SEWER OWNERS ON PROJECT

(1) UNION COUNTY PUBLIC WORKS (WATER)

SEAL

NORTH CAROLINA PROFESSIONAL SEAL 19661 ENGINEER KEVIN C. ZUEB

2013-JAN-18

UTILITY DESIGN BY:
MA Engineering CONSULTANTS, INC.
598 East Chatham Street, Suite 137 Cary, NC 27511
Phone: 919.297.0220 Fax. 919.297.0221

NCDOT BRIDGE PROGRAM MANAGER:
GARLAND HAYWOOD, P.E.
PREPARED FOR:
NORTH CAROLINA
DEPARTMENT OF TRANSPORTATION
DIVISION 10
ALBEMARLE, NC

1/17/2013
r:\utilities\rdy_ut\proj\890088_UC_TSH_UC-01.dgn
5:37:33 PM

PROJECT REFERENCE NO.	SHEET NO.
17.BP.10.R.21	UC-2

STATE OF NORTH CAROLINA
DIVISION OF HIGHWAYS

UTILITIES PLAN SHEET SYMBOLS

PROPOSED WATER SYMBOLS

- Water Line (Sized as Shown) — 12" WL
- 11¼ Degree Bend
- 22½ Degree Bend
- 45 Degree Bend
- 90 Degree Bend
- Plug
- Tee
- Cross
- Reducer
- Gate Valve — GV
- Butterfly Valve — BV
- Tapping Valve — TGV
- Line Stop — LS
- Line Stop with Bypass — LS/BP
- Blow Off — BO
- Fire Hydrant — PFH
- Relocate Fire Hydrant — RFH
- Remove Fire Hydrant — REM FH
- Water Meter — PWM
- Relocate Water Meter — RWM
- Remove Water Meter — REM WM
- Water Pump Station — PS(W)
- RPZ Backflow Preventer — PRPZ
- DCV Backflow Preventer — PBFP
- Relocate RPZ Backflow Preventer — RRPZ
- Relocate DCV Backflow Preventer — RBFP

PROPOSED SEWER SYMBOLS

- Gravity Sewer Line (Sized as Shown) — 12" SS
- Force Main Sewer Line (Sized as Shown) — 12" FSS
- Manhole (Sized per Note)
- Sewer Pump Station — PS(SS)

PROPOSED MISCELLANOUS UTILITIES SYMBOLS

- Power Pole
- Telephone Pole
- Joint Use Pole
- Telephone Pedestal — TEL PED
- Utility Line by Others (Type as Shown) — PROP O/H POW LINES
- Trenchless Installation — 12" TL INSTALL
- Encasement by Open Cut — 24" ENCAS BY OC
- Encasement — 24" ENCASEMENT
- Thrust Block
- Air Release Valve — AR
- Utility Vault — UV
- Concrete Pier — CP
- Steel Pier — SP
- Plan Note — NOTE
- Pay Item Note — PAY ITEM

EXISTING UTILITIES SYMBOLS

- Power Pole
- Telephone Pole
- Joint Use Pole
- Utility Pole
- Utility Pole with Base
- H-Frame Pole
- Power Transmission Line Tower
- Water Manhole
- Power Manhole
- Telephone Manhole
- Sanitary Sewer Manhole
- Hand Hole for Cable
- Power Transformer
- Telephone Pedestal
- CATV Pedestal
- Gas Valve
- Gas Meter
- Located Miscellaneous Utility Object
- Abandoned According to Utility Records — AATUR
- End of Information — E.O.I.
- *Underground Power Line — P
- *Underground Telephone Cable — T
- *Underground Telephone Conduit — TC
- *Underground Fiber Optics Telephone Cable — T FO
- *Underground TV Cable — TV
- *Underground Fiber Optics TV Cable — TV FO
- *Underground Gas Pipeline — G
- Aboveground Gas Pipeline — A/G Gas
- *Underground Water Line — W
- Aboveground Water Line — A/G Water
- *Underground Gravity Sanitary Sewer Line — SS
- Aboveground Gravity Sanitary Sewer Line — A/G Sanitary Sewer
- *Underground SS Forced Main Line — FSS
- Underground Unknown Utility Line — ?UTL
- SUE Test Hole
- Water Meter
- Water Valve
- Fire Hydrant
- Sanitary Sewer Cleanout

*For Existing Utilities

- Utility Line Drawn from Record (Type as Shown) — W
- Designated Utility Line (Type as Shown) — W

REV: 2/1/2012

5/14/99

\\utilities\Proj\890088.UC_SYM_UC-02.dgn
1/17/2013
12:06:06 PM

PROJECT REFERENCE NO.	SHEET NO.
17BP.10.R.21	UC-3
DESIGNED BY: SAG	
DRAWN BY: SAG	
CHECKED BY: KCZ	
APPROVED BY: KCZ	
REVISED:	
NORTH CAROLINA DEPARTMENT OF TRANSPORTATION	
UTILITIES ENGINEERING SEC. PHONE:(919)707-6690 FAX:(919)250-4151	UTILITY CONSTRUCTION PLANS ONLY

NORTH CAROLINA PROFESSIONAL SEAL 027661 ENGINEER KEVIN C. ZDES

2013-JAN-18

UTILITY CONSTRUCTION

MA Engineering CONSULTANTS, INC.
598 East Chatham Street Suite 137 Cary, NC 27511
Phone: 919.297.0220 Fax: 919.297.0221

UTILITY CONSTRUCTION

GENERAL NOTES:

1. THE PROPOSED UTILITY CONSTRUCTION SHALL MEET THE APPLICABLE REQUIREMENTS OF THE NC DEPARTMENT OF TRANSPORTATION'S "STANDARD SPECIFICATIONS FOR ROADS AND STRUCTURES" DATED JANUARY 2012.

2. THE EXISTING UTILITIES BELONG TO
   UNION COUNTY
   UTILITY: 8" WATER LINE
   CONTACT: LARRY DAVIS
   PHONE: 704-296-4232

3. ALL WATER LINES TO BE INSTALLED WITHIN COMPLIANCE OF THE RULES AND REGULATIONS OF THE NORTH CAROLINA DEPARTMENT OF ENVIRONMENTAL AND NATURAL RESOURCES, DIVISION OF ENVIRONMENTAL HEALTH. ALL SEWER LINES TO BE INSTALLED WITHIN COMPLIANCE OF THE RULES AND REGULATIONS OF THE NORTH CAROLINA DEPARTMENT OF ENVIRONMENT AND NATURAL RESOURCES, DIVISION OF WATER QUALITY. PERFORM ALL WORK IN ACCORDANCE WITH THE APPLICABLE PLUMBING CODES.

4. THE UTILITY OWNER OWNS THE EXISTING UTILITY FACILITIES AND WILL OWN THE NEW UTILITY FACILITIES AFTER ACCEPTANCE BY THE DEPARTMENT. THE DEPARTMENT OWNS THE CONSTRUCTION CONTRACT AND HAS ADMINISTRATIVE AUTHORITY. COMMUNICATIONS AND DECISIONS BETWEEN THE CONTRACTOR AND UTILITY OWNER ARE NOT BINDING UPON THE DEPARTMENT OR THIS CONTRACT UNLESS AUTHORIZED BY THE ENGINEER. AGREEMENTS BETWEEN THE UTILITY OWNER AND CONTRACTOR FOR THE WORK THAT IS NOT PART OF THIS CONTRACT OR IS SECONDARY TO THIS CONTRACT ARE ALLOWED, BUT ARE NOT BINDING UPON THE DEPARTMENT.

5. PROVIDE ACCESS FOR THE DEPARTMENT PERSONNEL AND THE OWNER'S REPRESENTATIVES TO ALL PHASES OF CONSTRUCTION. NOTIFY DEPARTMENT PERSONNEL AND THE UTILITY OWNER TWO WEEKS PRIOR TO COMMENCEMENT OF ANY WORK AND ONE WEEK PRIOR TO SERVICE INTERRUPTION. KEEP UTILITY OWNERS' REPRESENTATIVES INFORMED OF WORK PROGRESS AND PROVIDE OPPROTUNITY FOR INSPECTION OF CONSTRUCTION AND TESTING.

6. THE PLANS DEPICT THE BEST AVAILABLE INFORMATION FOR THE LOCATION, SIZE, AND TYPE OF MATERIAL FOR ALL EXISTING UTILITIES. MAKE INVESTIGATIONS FOR DETERMINING THE EXACT LOCATION, SIZE, AND TYPE MATERIAL OF THE EXISTING FACILITIES AS NECESSARY FOR THE CONSTRUCTION OF THE PROPOSED UTILITIES AND FOR AVOIDING DAMAGE TO EXISTING FACILITIES. REPAIR ANY DAMAGE INCURRED TO EXISTING FACILITIES TO THE ORIGINAL OR BETTER CONDITION AT NO ADDITONAL COST TO THE DEPARTMENT.

7. MAKE FINAL CONNECTIONS OF THE NEW WORK TO THE EXISTING SYSTEM WHERE INDICATED ON THE PLANS, AS REQUIRED TO FIT THE ACTUAL CONDITIONS, OR AS DIRECTED.

8. MAKE CONNECTIONS BETWEEN EXISTING AND PROPOSED UTILITIES AT TIMES MOST CONVENIENT TO THE PUBLIC, WITHOUT ENDANGERING THE UTILITY SERVICE, AND IN ACCORDANCE WITH THE UTILITY OWNER'S REQUIREMENTS. MAKE CONNECTIONS ON WEEKENDS, AT NIGHT, AND ON HOLIDAYS IF NECESSARY.

9. ALL UTILITY MATERIALS SHALL BE APPROVED PRIOR TO DELIVERY TO THE PROJECT. SEE 1500-7, " SUBMITTALS AND RECORDS" IN SECTION 1500 OF THE STANDARD SPECIFICATIONS.

PROJECT SPECIFIC NOTES:

1. ALL PROPOSED 8 INCH WATER LINE SHALL BE DUCTILE IRON RESTRAINED JOINT WITH PRESSURE CLASS 350.

2. WATER LINE TO BE INSTALLED IN A STEEL ENCASEMENT PIPE BY JACK AND BORE.

3. CONTRACTOR'S ATTENTION IS DIRECTED TO SECTIONS 102, 107, AND 1550 OF THE STANDARD SPECIFICATIONS CONCERNING TRENCHLESS INSTALLATION. IT IS CONTRACTOR'S RESPONSIBILITY TO HAVE BORE PATH DESIGNED AND SEALED BY A LICENSED NORTH CAROLINA PROFESSIONAL ENGINEER. NO DAMAGE IS ALLOWED TO RIVER, WETLANDS, OR BUFFER ZONES.

4. ALL WATER LINE FITTINGS SHALL BE MANUFACTURED IN ACCORDANCE WITH ANSI/AWWA C110/A21.10 AND BE OF RESTRAINED JOINT CONSTRUCTION.

5. ALL PROPOSED FITTINGS (BENDS, TEES, CROSSES, REDUCERS, PLUGS, ETC.) SHALL BE ADEQUATELY RESTRAINED BY RESTRAINED JOINT CONSTRUCTION AND/OR CAST IN PLACE CONCRETE THRUST BLOCKS AS DETAILED ON THESE DRAWINGS, OR AS DIRECTED BY THE RESIDENT ENGINEER.

5/14/99
1/7/2013
...tates\r-d...details\890088_UC-details_UC-03.dgn

PROJECT REFERENCE NO.	SHEET NO.
17BP.10.R.21	UC-3A

DESIGNED BY: SAG
DRAWN BY: SAG
CHECKED BY: KCZ
APPROVED BY: KCZ
REVISED:

NORTH CAROLINA DEPARTMENT OF TRANSPORTATION
UTILITIES ENGINEERING SEC.
PHONE:(919)707-6690
FAX:(919)250-4151

NORTH CAROLINA PROFESSIONAL ENGINEER SEAL 026180 KEVIN C. ZDEB

2013-JAN-18

UTILITY CONSTRUCTION PLANS ONLY

UTILITY CONSTRUCTION

MA Engineering CONSULTANTS, INC.
598 East Chatham Street Suite 137 Cary, NC 27511
Phone: 919.297.0220 Fax: 919.297.0221

PROJECT TYPICAL DETAILS

NOTE:
A 27" DIAMETER PRE-CAST RING SHALL BE PLACED AROUND EACH VALVE BOX.

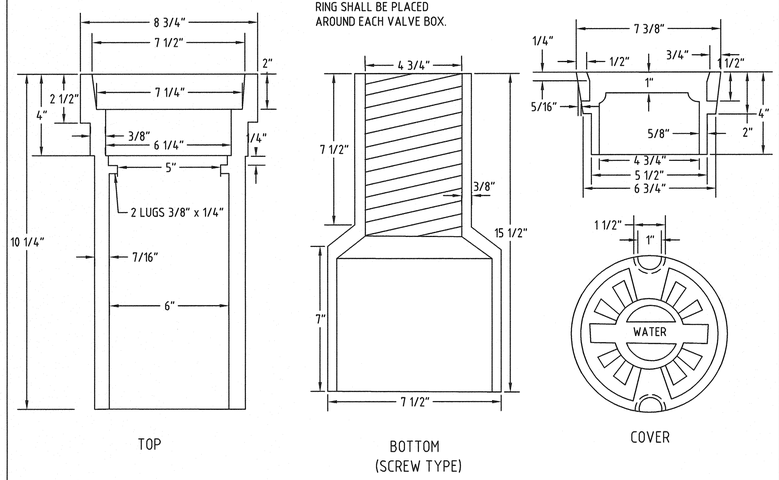

NOT TO SCALE | VALVE BOX | 1

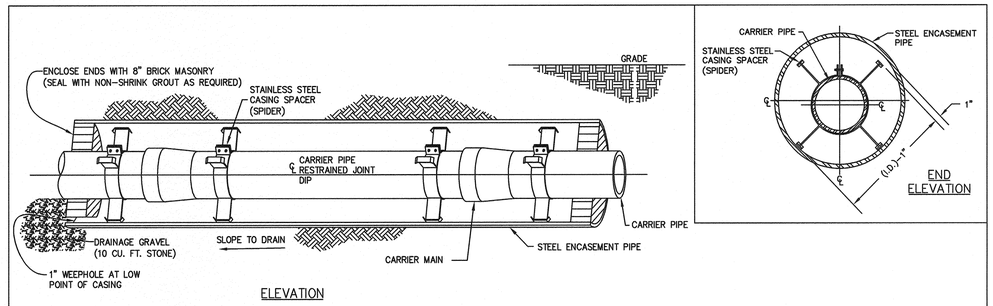

NOTES:

1. STAINLESS STEEL "SPIDERS" SHALL BE USED FOR SUPPORT OF THE CARRIER PIPE WITHIN THE STEEL ENCASEMENT PIPE. SPIDERS MANUFACTURED BY CASCADE WATERWORKS MFG. COMPANY OR APPROVED EQUAL.
2. A MINIMUM SPACING OF 2 SPIDERS PER JOINT OF CARRIER PIPE SHALL BE REQUIRED.
3. THE SPIDERS SHALL BE SPACED EVENLY ALONG THE CARRIER PIPE SUCH THAT EACH SPIDER SUPPORTS THE SAME UNIT WEIGHT OF THE CARRIER MAIN.
4. REFER TO PLAN SHEETS AND PROFILE SHEETS FOR LENGTH AND DIAMETER OF PROPOSED STEEL ENCASEMENT PIPES FOR EACH CROSSING.
5. STEEL ENCASEMENT PIPES SHALL EXTEND TO THE RR RIGHT-OF-WAY LINES OR AS SHOWN ON THE PLANS IN ACCORDANCE WITH THE NOTED SIZE AND LENGTH.
6. THE INSIDE DIAMETER OF THE ENCASEMENT PIPE SHALL BE AT LEAST 2 INCHES GREATER THAN THE LARGEST OUTSIDE DIAMETER OF THE CARRIER PIPE JOINTS OR COUPLINGS FOR CARRIER PIPE LESS THAN 6 INCHES IN DIAMETER; AND AT LEAST 4 INCHES GREATER FOR CARRIER PIPE 6 INCHES AND LARGER IN DIAMETER.
7. FOR EXISTING UTILITY PIPE INSTALLATIONS, THE STEEL ENCASEMENT PIPE SHALL BE A SPLIT STEEL ENCASEMENT PIPE MADE UP OF TWO (2) SEMI-CIRCULAR SECTIONS JOINED BY A CONTINUOUS WELD FROM ONE END TO THE OTHER WITHOUT ANY TRACEABLE VOIDS. JOINTS BETWEEN HORIZONTAL SECTIONS OF ENCASEMENT PIPE SHALL BE FULLY WELDED AROUND THE COMPLETE CIRCUMFERENCE OF THE PIPE.
8. STEEL ENCASEMENT PIPES SHALL HAVE A SPECIFIED MINIMUM YIELD STRENGTH OF AT LEAST 35,000 PSI.
9. UNCOATED AND UNPROTECTED STEEL ENCASEMENT PIPE SHALL HAVE A MINIMUM WALL THICKNESS AS NOTED BELOW:
   0.188 INCHES FOR ENCASEMENT PIPE 10" DIA. AND SMALLER
   0.250 INCHES FOR 12" DIA. ENCASEMENT PIPE
   0.312 INCHES FOR 18" DIA. ENCASEMENT PIPE
   0.344 INCHES FOR 20" DIA. AND 22" DIA. ENCASEMENT PIPE
   0.406 INCHES FOR 26" DIA. ENCASEMENT PIPE
   0.812 INCHES FOR 56" DIA. ENCASEMENT PIPE

STEEL ENCASEMENT PIPE

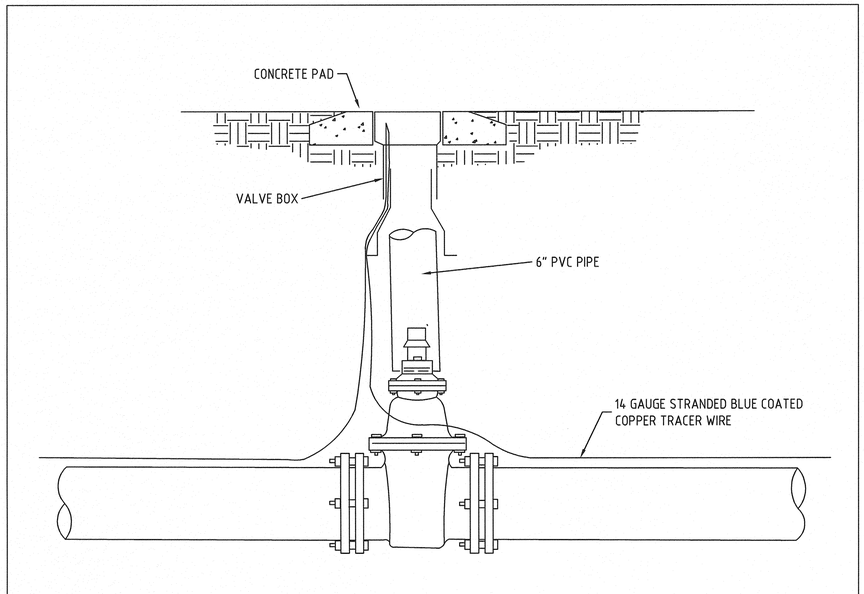

NOT TO SCALE | VALVE BOX INSTALLATION | 2

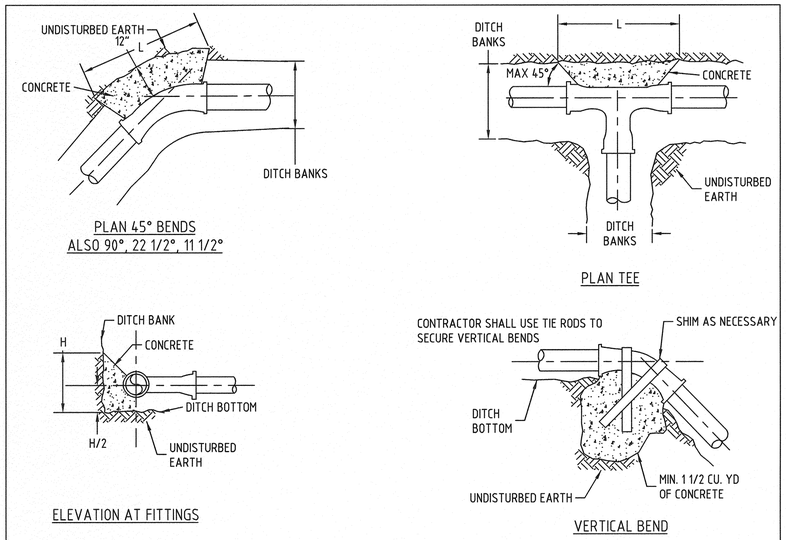

NOT TO SCALE | THRUST BLOCK | 3

5/14/99

1/17/2013
\\rdu-smb-p01\pwworkspace\projects\r-dq-43020-01\details\890088_UC_details_UC-03.dgn

PROJECT REFERENCE NO.	SHEET NO.
17BP.10.R.21	UC-3B

DESIGNED BY: SAG
DRAWN BY: SAG
CHECKED BY: KCZ
APPROVED BY: KCZ
REVISED:

NORTH CAROLINA DEPARTMENT OF TRANSPORTATION

UTILITIES ENGINEERING SEC.
PHONE:(919)707-6690
FAX:(919)250-4151

NORTH CAROLINA PROFESSIONAL SEAL 047661 ENGINEER KEVIN C. ZOBS
2013-JAN-18
UTILITY CONSTRUCTION PLANS ONLY

UTILITY CONSTRUCTION

MA Engineering CONSULTANTS, INC.
598 East Chatham Street Suite 137 Cary, NC 27511
Phone: 919.297.0220 Fax: 919.297.0221

BASED ON TEST PRESSURE OF 200 P.S.I.

HORIZONTAL RESTRAINT
(ALL AREAS GIVEN ARE IN SQUARE FEET)

PIPE SIZE	DEGREE OF BEND	LBS. STATIC THRUST *	ALLOWABLE SOIL BEARING (PSF) 1000	2000	3000	4000	5000	6000	7000	8000
4"	11 1/4°	616	1	1	1	1	1	1	1	1
	22 1/2°	1,226	1	1	1	1	1	1	1	1
	45°	2,405	2	1	1	1	1	1	1	1
	90°	4,444	4	2	1	1	1	1	1	1
	TEE/PLUG	3,141	3	2	1	1	1	1	1	1
6"	11 1/4°	1,385	2	1	1	1	1	1	1	1
	22 1/2°	2,758	3	2	1	1	1	1	1	1
	45°	5,409	5	3	2	2	1	1	1	1
	90°	9,999	10	5	3	3	2	2	2	1
	TEE/PLUG	7,068	7	4	3	2	2	1	1	1
8"	11 1/4°	2,464	3	1	1	1	1	1	1	1
	22 1/2°	4,904	5	3	2	2	1	1	1	1
	45°	9,619	10	5	3	2	2	2	2	1
	90°	17,773	18	9	6	4	4	3	3	2
	TEE/PLUG	12,568	13	6	4	3	3	2	2	2
10"	11 1/4°	3,846	4	2	2	1	1	1	1	1
	22 1/2°	7,661	8	4	3	3	2	2	1	1
	45°	15,028	15	8	5	4	3	3	2	2
	90°	27,748	28	14	9	7	6	5	4	3
	TEE/PLUG	19,635	20	10	7	5	4	3	3	2
12"	11 1/4°	5,543	6	3	2	2	1	1	1	1
	22 1/2°	11,032	11	6	4	3	2	2	2	2
	45°	21,641	22	11	7	6	4	4	3	3
	90°	39,987	40	20	13	10	8	7	6	5
	TEE/PLUG	28,274	28	14	9	7	6	5	4	4
14"	11 1/4°	7,544	8	4	3	2	2	2	1	1
	22 1/2°	15,016	15	8	5	4	3	3	2	2
	45°	29,455	29	15	10	7	6	5	4	4
	90°	54,426	54	27	18	14	11	9	8	7
	TEE/PLUG	38,485	38	19	13	10	8	6	5	5
16"	11 1/4°	9,854	10	5	3	3	2	2	2	2
	22 1/2°	19,612	20	10	7	5	4	3	3	3
	45°	38,471	38	17	13	10	8	6	5	5
	90°	71,085	71	36	24	18	14	12	10	9
	TEE/PLUG	50,265	50	25	17	13	10	8	7	6

* INCLUDES 1.25 SAFETY FACTOR

VERTICAL RESTRAINT
(ALL VOLUMES GIVEN ARE IN CUBIC YARDS)**

PIPE SIZE	RESTRAINING RODS NO.REQ'D	DIA.	DEGREE OF BEND 11 1/4°	22 1/2°	45°
4"	2	1/2"	0.25	0.50	0.75
6"	2	1/2"	0.50	1.0	1.75
8"	2	5/8"	0.75	1.50	3.0
10"	2	3/4"	1.25	2.25	4.50
12"	2	7/8"	1.75	3.25	6.50
14"	4	5/8"	2.25	4.50	8.75
16"	4	3/4"	3.0	6.0	11.50

**INCLUDES 1.50 SAFETY FACTOR

GENERAL NOTES:
1. CONCRETE SHALL BE CLASS "B".
2. CONCRETE SHALL NOT CONTACT BOLTS ENDS OF MECHANICAL JOINT FITTINGS.
3. CONSULT WITH ENGINEER FOR CONCRETE REQUIREMENTS ON MAINS LARGER THAN 16 INCHES. (FOR VERTICAL & HORIZONTAL BENDS)
4. ALLOWABLE SOIL BEARING SHALL BE DETERMINED BY THE ENGINEER.

REVISIONS		
NO.	DATE	DESCRIPTION

SHEET 2 OF 2

THRUST RESTRAINT FOR WATER MAINS

STATE OF NORTH CAROLINA
DIVISION OF HIGHWAYS
RALEIGH, N.C.

BEDDING DETAIL

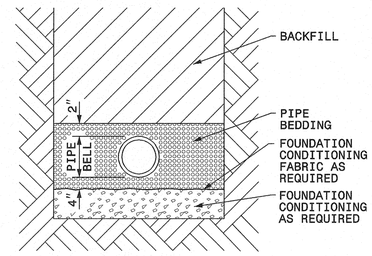

PLACE FOUNDATION CONDITIONING MATERIAL BELOW BEDDING IF REQUIRED, AS DIRECTED BY ENGINEER. PIPE BEDDED IN SELECT MATERIAL, CLASS II (TYPE 1) OR CLASS III. TRENCH BACKFILLED IN LOOSE 6" LAYERS COMPACTED TO TOP OF TRENCH USING LOCAL EXCAVATED MATERIAL IF APPROVED BY THE ENGINEER, OR SELECT MATERIAL. ALL MATERIAL SHALL BE FREE OF ROCKS, FOREIGN MATERIAL, AND FROZEN EARTH. COMPACTION SHALL BE TO APPROXIMATELY 95% DENSITY IN ACCORDANCE WITH AASHTO T-99 AS MODIFIED BY THE DEPARTMENT OF TRANSPORTATION.

MAXIMUM TRENCH WIDTH AT TOP OF PIPE

NOMINAL PIPE SIZE (INCHES)	TRENCH WIDTH (INCHES)	NOMINAL PIPE SIZE (INCHES)	TRENCH WIDTH (INCHES)
4	28	20	44
6	30	24	48
8	32	30	54
10	34	36	60
12	36	42	66
14	38	48	72
16	40	54	78
18	42		

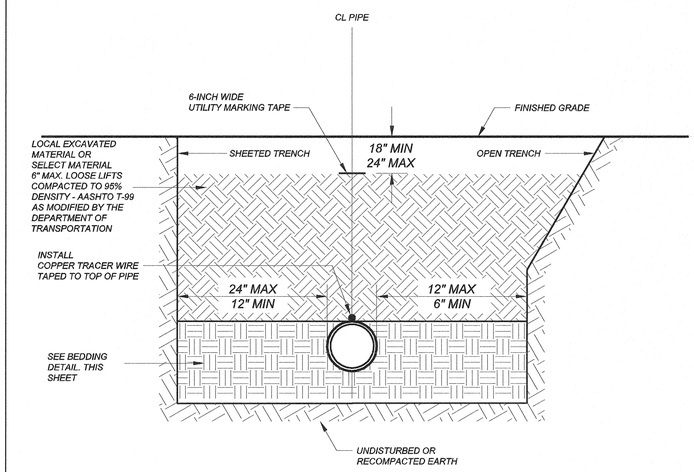

NOTES:
1. ALL SHORING & TRENCHING SHALL COMPLY WITH OSHA SAFETY STANDARDS FOR THE CONSTRUCTION INDUSTRY.
2. BELL HOLES NOT SHOWN.
3. ALL BACKFILL MATERIAL SHALL BE FREE OF ROCKS, FOREIGN MATERIAL, AND FROZEN EARTH.

GENERAL TRENCH DETAIL
NTS

FITTING	REQUIRED RESTRAINED LENGTH (FT) OF BARE D.I. PIPE BY DEPTH OF COVER							
HORIZONTAL BENDS	**3 FT**	**4 FT**	**5 FT**	**6 FT**	**7 FT**	**8 FT**	**9 FT**	**10 FT**
8 INCH DIA - 11.25 DEG	3	3	2	2	2	2	2	2
8 INCH DIA - 22.5 DEG	7	6	5	5	4	4	3	3
8 INCH DIA - 45 DEG	14	12	10	9	8	8	7	7
8 INCH DIA - 90 DEG	33	29	25	23	20	19	17	16
VERTICAL DOWN BENDS	**3 FT**	**4 FT**	**5 FT**	**6 FT**	**7 FT**	**8 FT**	**9 FT**	**10 FT**
8 INCH DIA - 11.25 DEG	10	8	7	6	6	5	5	5
8 INCH DIA - 22.5 DEG	19	17	15	13	12	11	10	9
8 INCH DIA - 45 DEG	40	35	30	27	25	22	21	19
VERTICAL UP BENDS	**3 FT**	**4 FT**	**5 FT**	**6 FT**	**7 FT**	**8 FT**	**9 FT**	**10 FT**
8 INCH DIA - 11.25 DEG	3	3	2	2	2	2	2	2
8 INCH DIA - 22.5 DEG	7	6	5	5	4	4	3	3
8 INCH DIA - 45 DEG	14	12	10	9	8	8	7	7
DEAD ENDS / VALVES	**3 FT**	**4 FT**	**5 FT**	**6 FT**	**7 FT**	**8 FT**	**9 FT**	**10 FT**
8 INCH DIA	65	59	54	50	46	43	40	38

ASSUMPTIONS

LAYING CONDITION = TYPE 4
SOIL DESIGNATION = GC = COHESIVE-GRANULAR
DESIGN PRESSURE = 200 PSI (TEST PRESSURE)
SAFETY FACTOR = 1.5

NOTES

1. RESTRAINED LENGTH IS MEASURED FROM THE CENTER OF THE BEND AS FOLLOWS:
   A. HORIZONTAL AND VERTICAL BENDS: ALONG EACH SIDE OF BEND.
   B. HORIZONTAL AND VERTICAL BENDS - OFFSET OR COMBINED: ALONG THE OUTER SIDE OF EACH BEND. ALL PIPE BETWEEN THE TWO BENDS SHALL BE RESTRAINED JOINT WHEN THE DISTANCE BETWEEN THEM IS EQUAL TO OR LESS THAN THE REQUIRED RESTRAINED LENGTH. WHEN THE DISTANCE BETWEEN BENDS IS LESS THAN REQUIRED, THE BALANCE OF THE REQUIRED RESTRAINED LENGTH SHALL BE ADDED ON TO THE LENGTH ALONG THE OUTSIDE OF EACH BEND RESPECTIVELY TO MAKE UP FOR THE DEFICIENCY IN THAT DIRECTION.
   HORIZONTAL BEND EXAMPLE...
   INSTALL A 8 INCH 45 DEG BEND AND A 22.5 DEG BEND WITH 10 FEET BETWEEN BENDS AND 4 FEET OF COVER. THE CONTRACTOR SHALL PROVIDE AN ADDITIONAL 1 FOOT OF RESTRAINED LENGTH BEYOND THE 45 DEGREE BEND (FOR A TOTAL OF 13 FEET) AND AN ADDITIONAL 7 FEET OF RESTRAINED LENGTH BEYOND THE 22.5 DEGREE BEND (FOR A TOTAL OF 13 FEET).
2. WHEN IT IS NOT POSSIBLE TO INSTALL THE RESTRAINED LENGTHS AS NOTED BY THIS TABLE, THE CONTRACTOR SHALL INSTALL THE APPROPRIATE CONCRETE THRUST RESTRAINTS AS PER THE DETAILS HEREIN.

PROJECT REFERENCE NO.	SHEET NO.
17BP.10.R.21	UC-3C

DESIGNED BY: SAG
DRAWN BY: SAG
CHECKED BY: KCZ
APPROVED BY: KCZ
REVISED:

NORTH CAROLINA DEPARTMENT OF TRANSPORTATION
UTILITIES ENGINEERING SEC.
PHONE:(919)707-6690
FAX:(919)250-4151

NORTH CAROLINA PROFESSIONAL ENGINEER SEAL KEVIN C. ZIDEK

2013-JAN-18
UTILITY CONSTRUCTION PLANS ONLY

UTILITY CONSTRUCTION

MA Engineering CONSULTANTS, INC.
598 East Chatham Street Suite 137 Cary, NC 27511
Phone: 919.297.0220 Fax: 919.297.0221

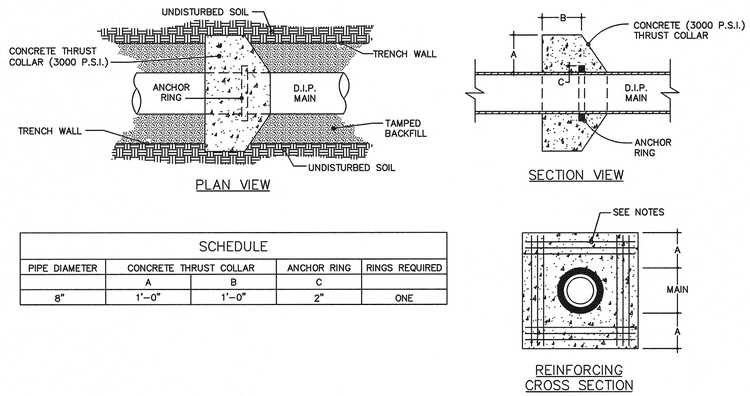

SCHEDULE				
PIPE DIAMETER	CONCRETE THRUST COLLAR		ANCHOR RING	RINGS REQUIRED
	A	B	C	
8"	1'-0"	1'-0"	2"	ONE

NOTES:
6" TO 16" MAINS = 12-NO. 7 BARS
20" TO 36" MAINS = 12-NO. 8 BARS
BARS PLACED AS SHOWN

STANDARD THRUST COLLAR INSTALLATION

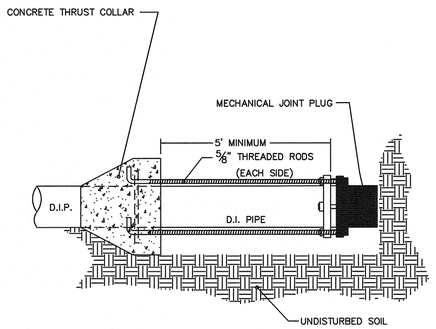

PLAN VIEW
NTS

DEAD END DETAIL

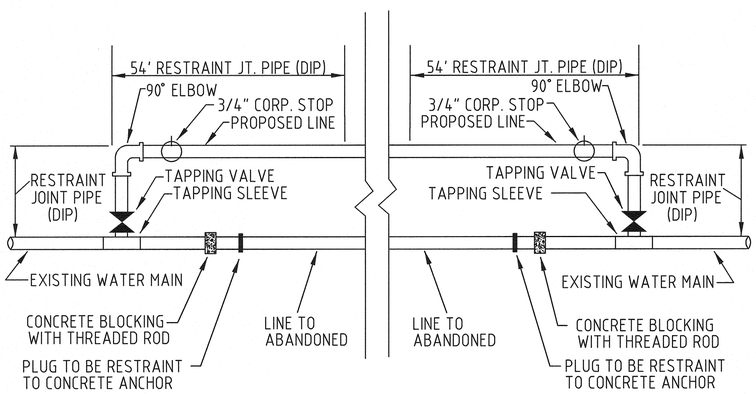

NOTE: ALL WATERMAINS ALONG EXISTING DOT ROADS MUST BE A MINIMUM DISTANCE OF A 1/1 RATIO OFF EDGE OF PAVEMENT OR BACK OF CURB.

NOT TO SCALE | WATERMAIN RELOCATION FOR SMALL WATERMAINS | 4

PROJECT REFERENCE NO.	SHEET NO.
17BP.10.R.21	UC-4
DESIGNED BY: SAG	
DRAWN BY: SAG	
CHECKED BY: KCZ	
APPROVED BY: KCZ	
REVISED:	
NORTH CAROLINA DEPARTMENT OF TRANSPORTATION	
UTILITIES ENGINEERING SEC. PHONE:(919)707-6690 FAX:(919)250-4151	UTILITY CONSTRUCTION PLANS ONLY

NORTH CAROLINA PROFESSIONAL SEAL 027661 ENGINEER KEVIN C. ZDER

2013-JAN-18

MA Engineering CONSULTANTS, INC.
598 East Chatham Street Suite 137 Cary, NC 27511
Phone: 919.297.0220 Fax: 919.297.0221

UTILITY CONSTRUCTION

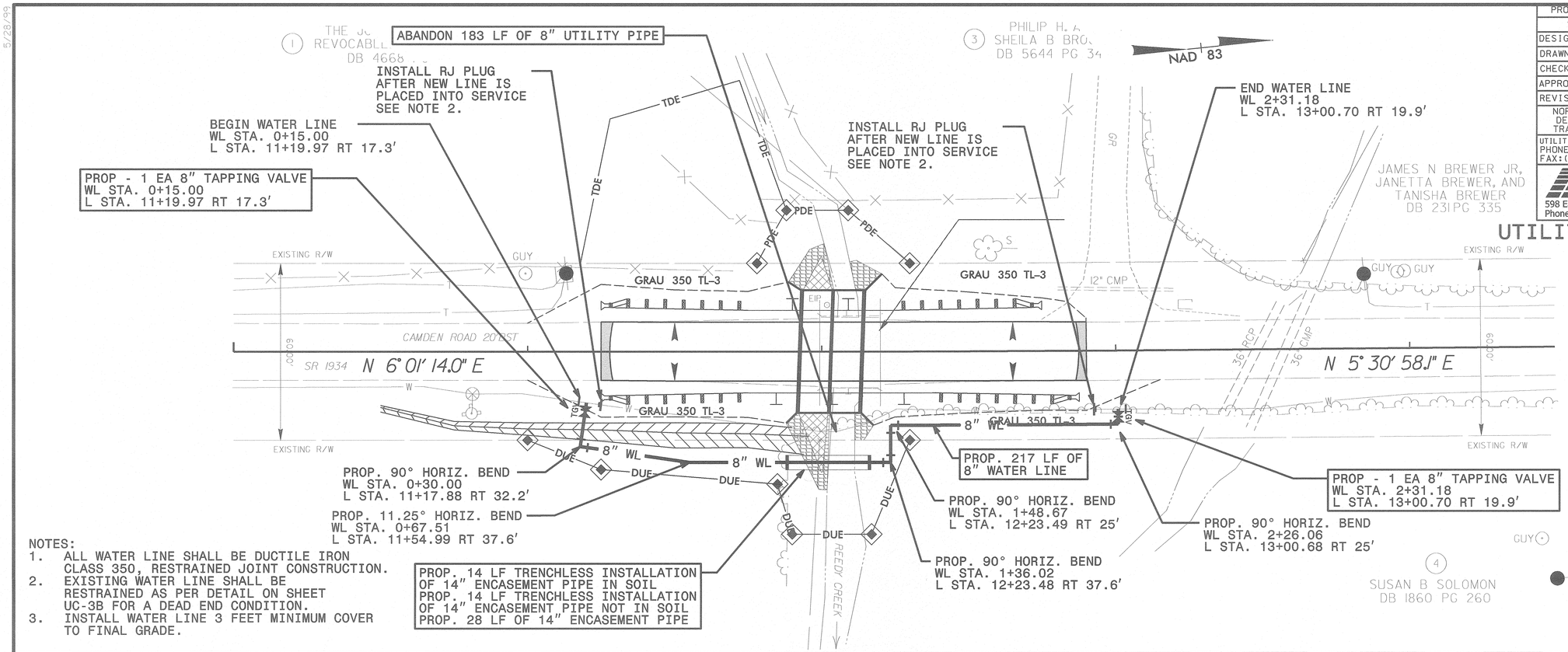

UTILITY OWNERS ON THIS PROJECT:

1. UNION COUNTY
   UTILITY: 8" WATER LINE
   CONTACT: LARRY DAVIS
   PHONE: 704-296-4219

NOTES:
1. ALL WATER LINE SHALL BE DUCTILE IRON CLASS 350, RESTRAINED JOINT CONSTRUCTION.
2. EXISTING WATER LINE SHALL BE RESTRAINED AS PER DETAIL ON SHEET UC-3B FOR A DEAD END CONDITION.
3. INSTALL WATER LINE 3 FEET MINIMUM COVER TO FINAL GRADE.

SCALE:
1" = 20' PLAN
1" = 20' HORIZ. PFL
1" = 10' VERT. PFL

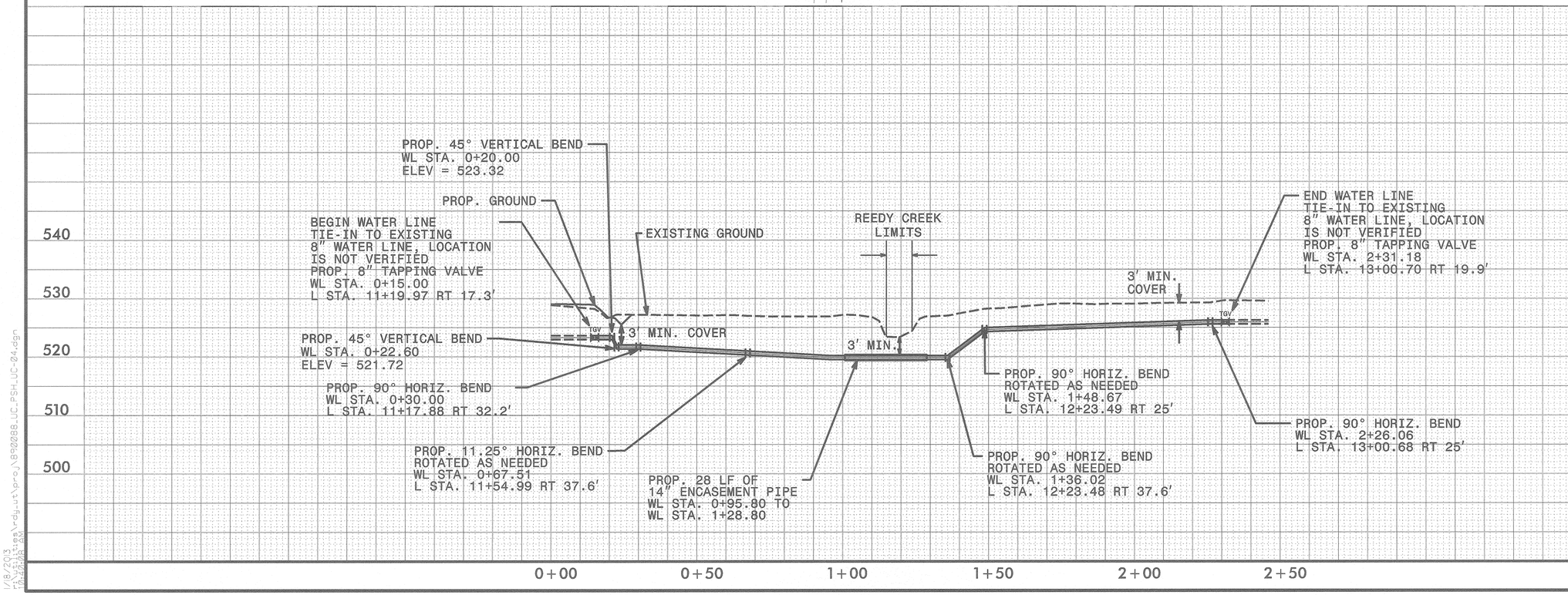

5/28/99

1/8/2013
T:\Projects\rdy_ut\proj\B90088_UC_PSH_UC-04.dgn

09/08/99

TIP PROJECT: 17BP.10.R.21

T.I.P. NO.	SHEET NO.
17BP.10.R.21	UO-1

See Sheet 1-A For Index of Sheets
See Sheet 1-B For Symbology

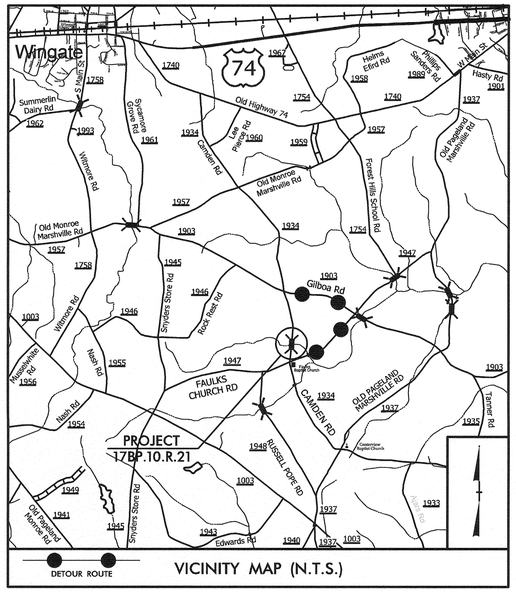

STATE OF NORTH CAROLINA
DIVISION OF HIGHWAYS

UTILITIES BY OTHERS PLANS
UNION COUNTY

LOCATION: BRIDGE #88 OVER REEDY CREEK ON SR 1934 (CAMDEN RD.)

TYPE OF WORK: PHONE RELOCATION

NAD 83

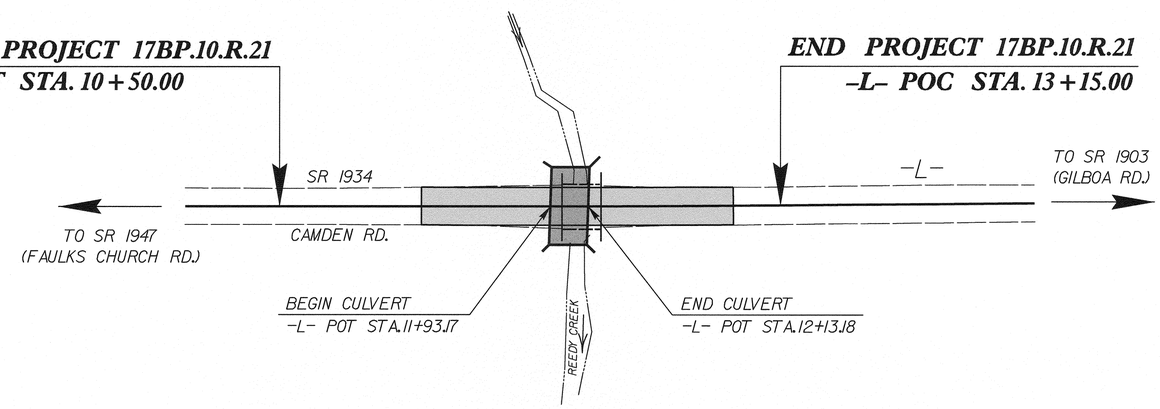

CLEARING ON THIS PROJECT SHALL BE PERFORMED TO THE LIMITS ESTABLISHED BY METHOD II.

GRAPHIC SCALES

10 5 0 10 20
PLANS

20 10 0 20 40
PROFILE (HORIZONTAL)

4 2 0 4 8
PROFILE (VERTICAL)

INDEX OF SHEETS

SHEET NO.	DESCRIPTION
UC-1	TITLE SHEET
UO-2	PLAN SHEET

UTILITIES OWNERS ON PROJECT

(1) PHONE - WINDSTREAM COMMUNICATION

UTILITY DESIGN BY:

MA Engineering CONSULTANTS, INC.
598 East Chatham Street, Suite 137 Cary, NC 27511
Phone: 919.297.0220 Fax. 919.297.0221

NCDOT BRIDGE PROGRAM MANAGER:
GARLAND HAYWOOD, P.E.
PREPARED FOR:
NORTH CAROLINA
DEPARTMENT OF TRANSPORTATION
DIVISION 10
ALBEMARLE, NC

1/17/2013
C:\utilities\rdy_ut\proj\890088_UO-1_tsh.dgn
5:37:54 PM

PROJECT REFERENCE NO.	SHEET NO.
17BP.10.R.21	UO-2

NOTE:
ALL PROPOSED UTILITY WORK SHOWN ON THIS SHEET WILL BE DONE BY OTHERS

MA Engineering CONSULTANTS, INC.
598 East Chatham Street Suite 137 Cary, NC 27511
Phone: 919.297.0220 Fax: 919.297.0221

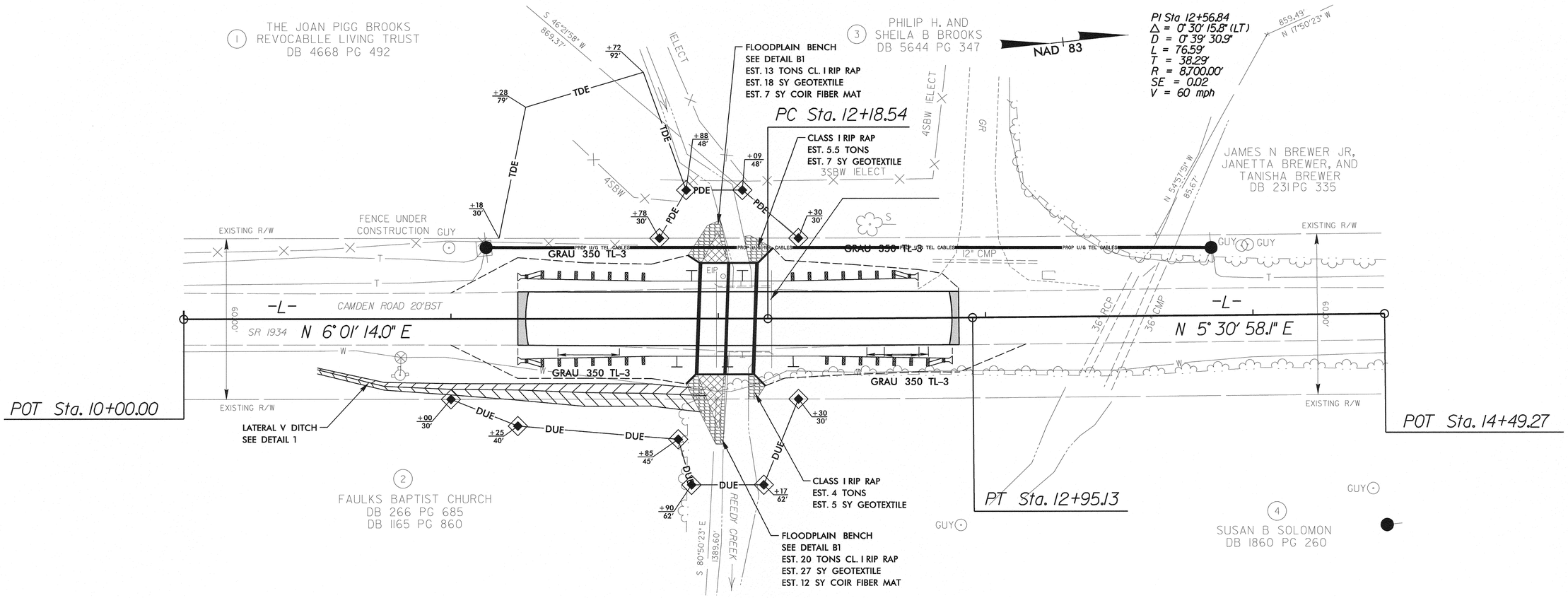

REVISIONS

8/17/99

1/17/2013
12:38:02 PM
f:\pe\ges\rdy_ut\proj\890088_UO-2_psh.dgn

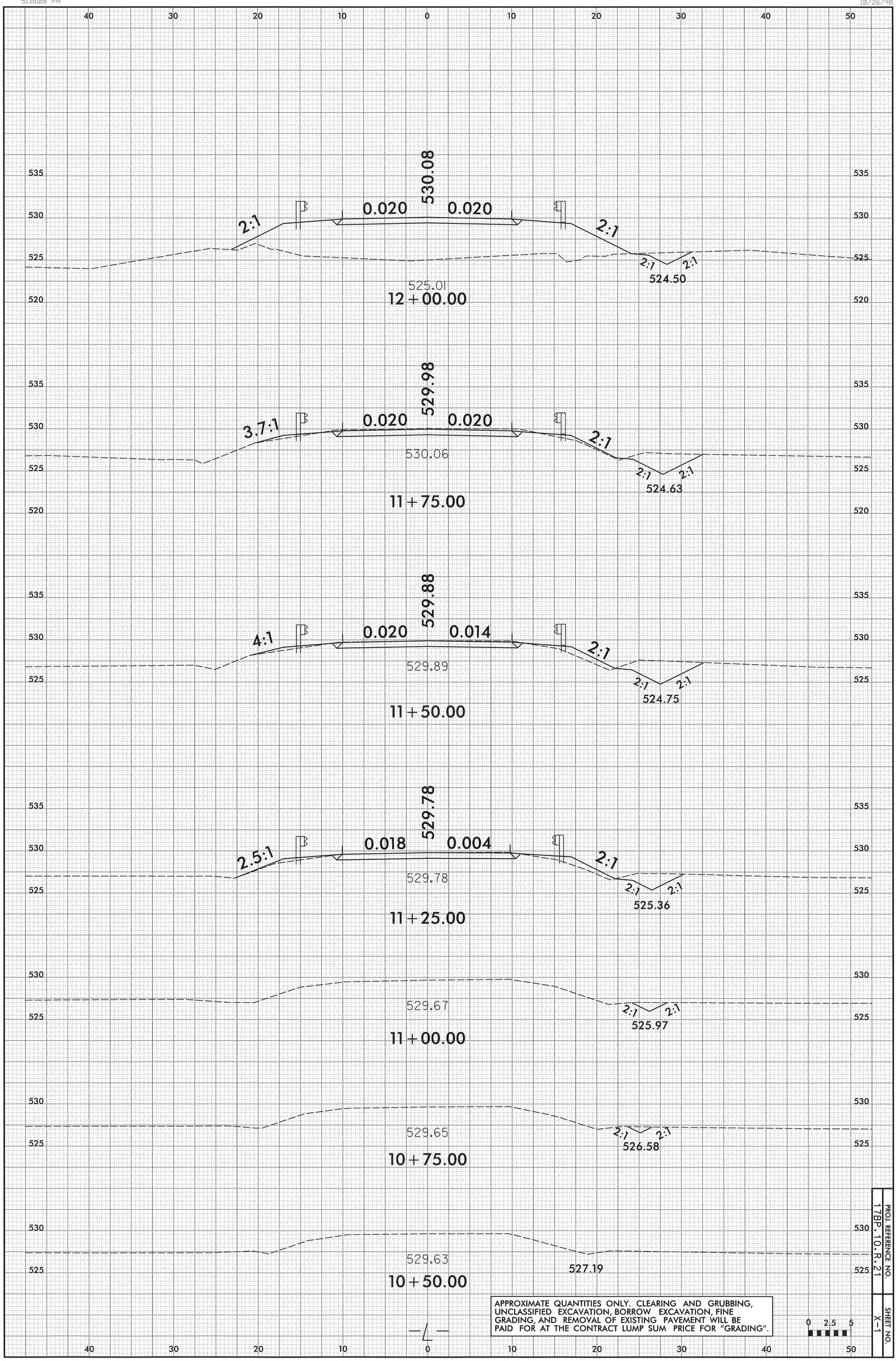

APPROXIMATE QUANTITIES ONLY. CLEARING AND GRUBBING, UNCLASSIFIED EXCAVATION, BORROW EXCAVATION, FINE GRADING, AND REMOVAL OF EXISTING PAVEMENT WILL BE PAID FOR AT THE CONTRACT LUMP SUM PRICE FOR "GRADING".

0 2.5 5

PROJ. REFERENCE NO. 17BP.10.R.21

SHEET NO. X-1

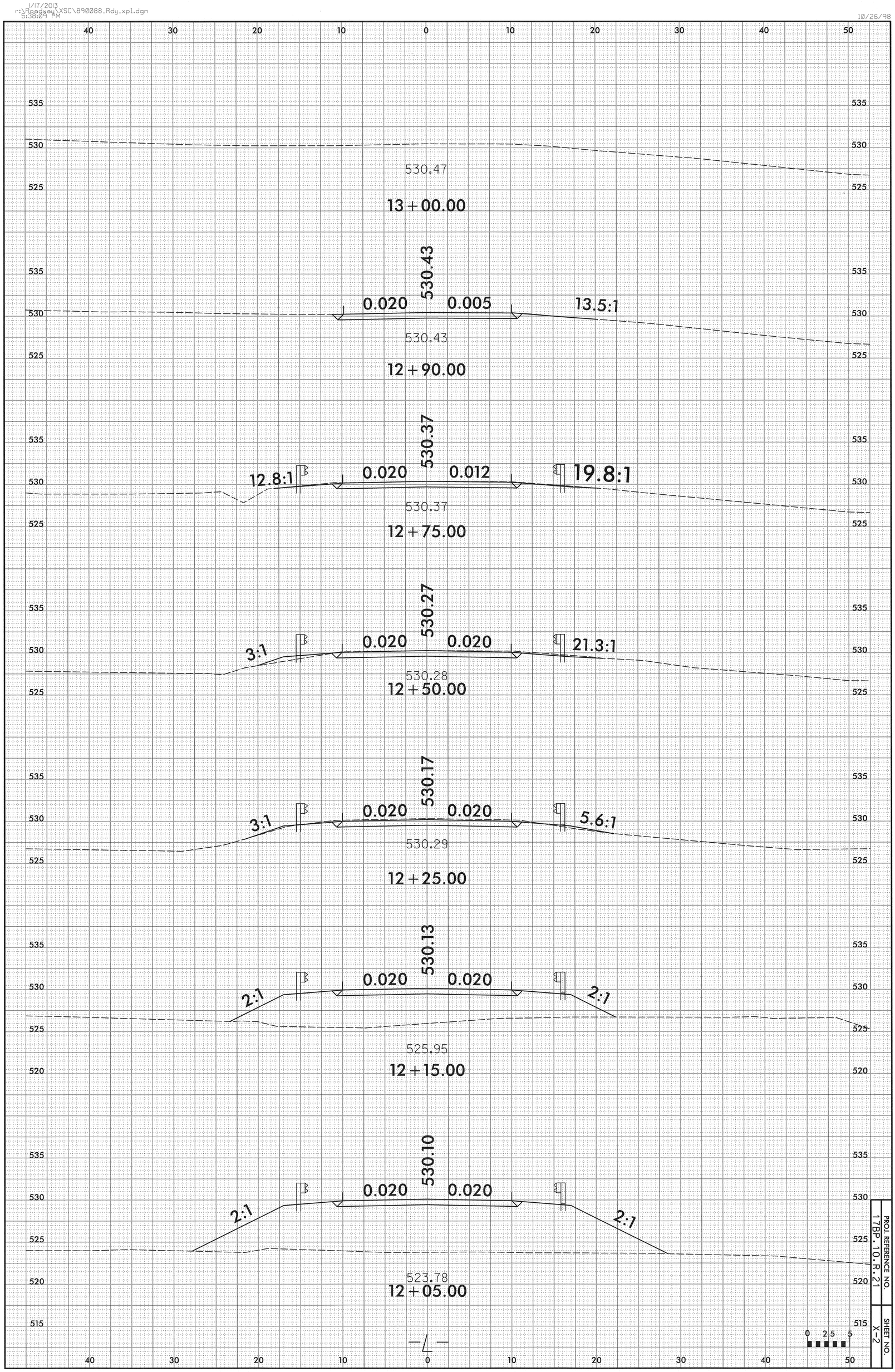

PROJ. REFERENCE NO. 17BP.10.R.21

SHEET NO. X-2

BM: BL-2 CONTROL MONUMENT N 435450.2380, E 1576830.3380, 14.83' LT. OF STA. 12+31.41 -L-, EL. 529.64

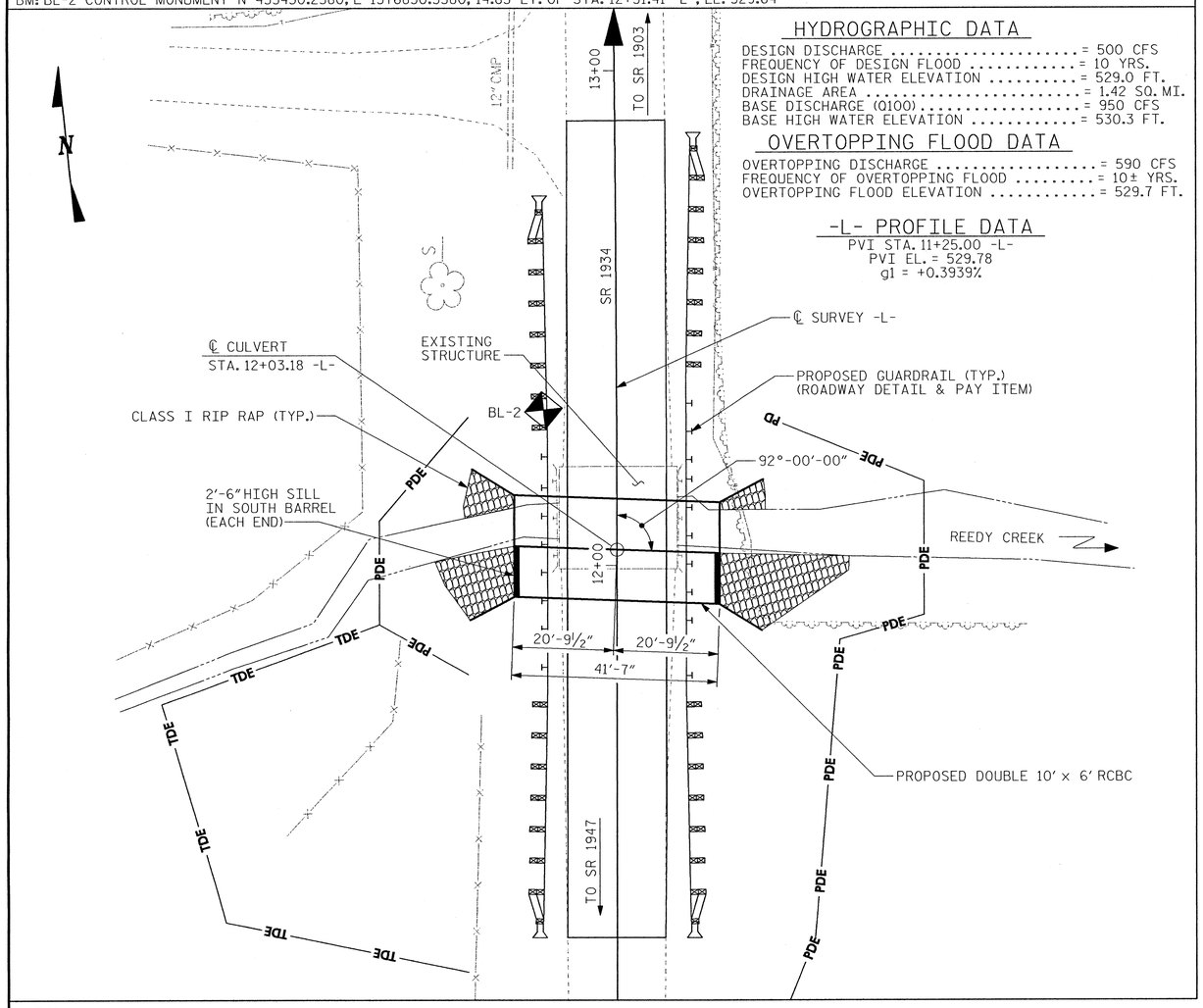

HYDROGRAPHIC DATA

DESIGN DISCHARGE ..... = 500 CFS
FREQUENCY OF DESIGN FLOOD ..... = 10 YRS.
DESIGN HIGH WATER ELEVATION ..... = 529.0 FT.
DRAINAGE AREA ..... = 1.42 SQ. MI.
BASE DISCHARGE (Q100) ..... = 950 CFS
BASE HIGH WATER ELEVATION ..... = 530.3 FT.

OVERTOPPING FLOOD DATA

OVERTOPPING DISCHARGE ..... = 590 CFS
FREQUENCY OF OVERTOPPING FLOOD ..... = 10± YRS.
OVERTOPPING FLOOD ELEVATION ..... = 529.7 FT.

-L- PROFILE DATA

PVI STA. 11+25.00 -L-
PVI EL. = 529.78
g1 = +0.3939%

LOCATION SKETCH

FOR UTILITY INFORMATION, SEE UTILITY PLANS AND SPECIAL PROVISIONS
GRADE POINT ELEVATION @ 12+03.18 -L- = 530.09
BED ELEVATION @ 12+03.18 -L- = 523.30
ROADWAY SLOPES = 2:1

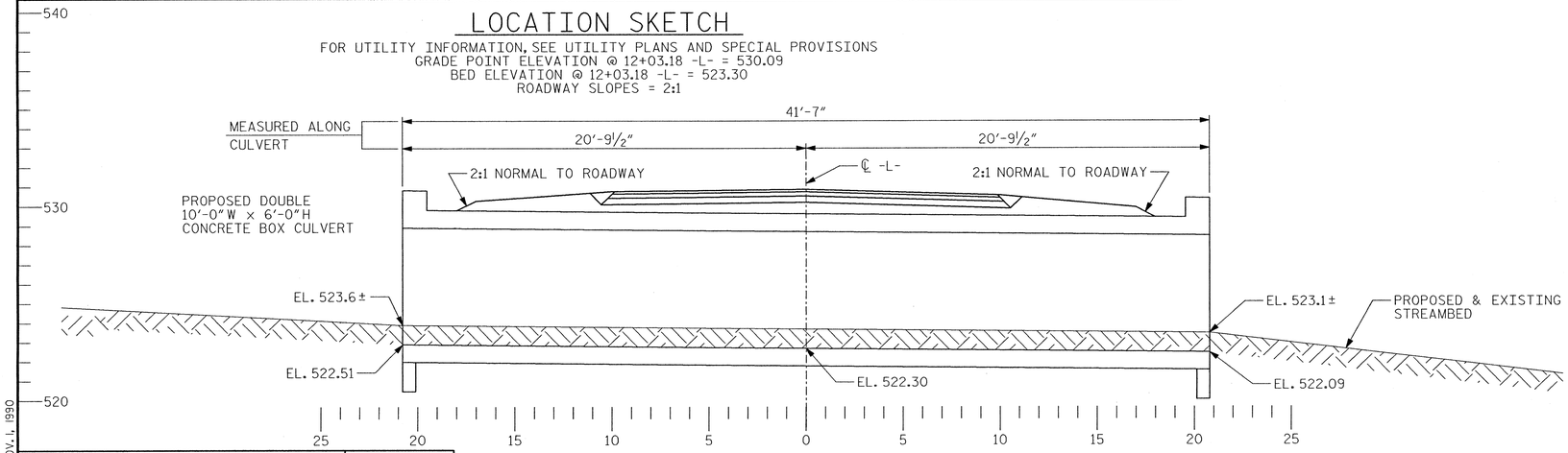

PROFILE ALONG ℄ CULVERT

NOTES

ASSUMED LIVE LOAD ----------HL-93 OR ALTERNATE LOADING.

DESIGN FILL----------2.0 FT.

FOR OTHER DESIGN DATA AND NOTES SEE STANDARD NOTE SHEET.

3" Ø WEEP HOLES INDICATED TO BE IN ACCORDANCE WITH THE SPECIFICATIONS.

CONCRETE IN CULVERTS TO BE POURED IN THE FOLLOWING ORDER:

1. WING FOOTINGS AND FLOOR SLAB INCLUDING 4" OF ALL VERTICAL WALLS.
2. THE REMAINING PORTIONS OF THE WALLS AND WINGS FULL HEIGHT FOLLOWED BY ROOF SLAB AND HEADWALLS.

THE RESIDENT ENGINEER SHALL CHECK THE LENGTH OF CULVERT BEFORE STAKING IT OUT TO MAKE CERTAIN THAT IT WILL PROPERLY TAKE CARE OF THE FILL.

DIMENSIONS FOR WING LAYOUT AS WELL AS ADDITIONAL REINFORCING STEEL EMBEDDED IN BARREL ARE SHOWN ON WING SHEET.

STEEL IN THE BOTTOM SLAB MAY BE SPLICED AT THE PERMITTED CONSTRUCTION JOINT AT THE CONTRACTOR'S OPTION. EXTRA WEIGHT OF STEEL DUE TO THE SPLICES SHALL BE PAID FOR BY THE CONTRACTOR.

AT THE CONTRACTOR'S OPTION, HE MAY SPLICE THE VERTICAL REINFORCING STEEL IN THE INTERIOR FACE OF EXTERIOR WALL AND BOTH FACES OF INTERIOR WALLS ABOVE LOWER WALL CONSTRUCTION JOINT. THE SPLICE LENGTH SHALL BE AS PROVIDED IN THE SPLICE LENGTH CHART SHOWN ON THE PLANS. EXTRA WEIGHT OF STEEL DUE TO THE SPLICES SHALL BE PAID FOR BY THE CONTRACTOR.

AT THE CONTRACTOR'S OPTION HE MAY SUBMIT, TO THE ENGINEER FOR APPROVAL, DESIGN AND DETAIL DRAWINGS FOR A PRECAST REINFORCED CONCRETE BOX CULVERT IN LIEU OF THE CAST-IN-PLACE CULVERT SHOWN ON THE PLANS. THE DESIGN SHALL PROVIDE THE SAME SIZE AND NUMBER OF BARRELS AS USED ON THE CAST-IN-PLACE DESIGN. FOR OPTIONAL PRECAST REINFORCED CONCRETE BOX CULVERT, SEE SPECIAL PROVISIONS.

THE EXISTING STRUCTURE CONSISTING OF 1 SPAN (1 @ 21'-0") WITH PRECAST PRESTRESSED CONCRETE CHANNELS ON ASPHALT WEARING SURFACE AND A CLEAR ROADWAY WIDTH OF 24'-0" ON PRECAST PRESTRESSED CONCRETE END BENT CAPS AND TIMBER BULKHEADS WITH TIMBER PILES LOCATED AT THE SITE OF THE PROPOSED STRUCTURE SHALL BE REMOVED.

REMOVAL OF THE EXISTING BRIDGE SHALL BE PERFORMED SO AS TO NOT ALLOW DEBRIS TO FALL INTO THE WATER. THE CONTRACTOR SHALL REMOVE THE BRIDGE AND SUBMIT PLANS FOR DEMOLITION IN ACCORDANCE WITH ARTICLE 402-2 OF THE STANDARD SPECIFICATIONS.

THE SUBSTRUCTURE OF THE EXISTING BRIDGE INDICATED ON THE PLANS IS FROM THE BEST INFORMATION AVAILABLE. SINCE THIS INFORMATION IS SHOWN FOR THE CONVENIENCE OF THE CONTRACTOR, THE CONTRACTOR SHALL HAVE NO CLAIM WHATSOEVER AGAINST THE DEPARTMENT OF TRANSPORTATION FOR ANY DELAYS OR ADDITIONAL COST INCURRED BASED ON THE DIFFERENCES BETWEEN THE EXISTING BRIDGE SUBSTRUCTURE SHOWN ON THE PLANS AND THE ACTUAL CONDITIONS AT THE PROJECT SITE.

FOR CULVERT DIVERSION DETAILS AND PAY ITEM, SEE EROSION CONTROL PLANS.

A 3 FOOT STRIP OF FILTER FABRIC SHALL BE ATTACHED TO THE FILL FACE OF THE WING COVERING THE ENTIRE LENGTH OF THE EXPANSION JOINT.

EXCAVATE 1 FT. BELOW CULVERT AND FOOTINGS AND REPLACE WITH FOUNDATION CONDITIONING MATERIAL IN ACCORDANCE WITH SECTION 414 OF THE STANDARD SPECIFICATIONS.

FOR SUBMITTAL OF WORKING DRAWINGS, SEE SPECIAL PROVISIONS.

FOR FALSWORK AND FORMWORK, SEE SPECIAL PROVISIONS.

FOR CRANE SAFETY, SEE SPECIAL PROVISIONS.

FOR GROUT FOR STRUCTURES, SEE SPECIAL PROVISIONS.

TOTAL STRUCTURE QUANTITIES

CLASS A CONCRETE				
BARREL @	1.898	CY/FT	78.9	C.Y.
WING ETC.			18.2	C.Y.
TOTAL			97.1	C.Y.
REINFORCING STEEL				
BARREL			14,105	LBS.
WINGS ETC.			793	LBS.
TOTAL			14,898	LBS.
EPOXY REINFORCING STEEL				
TOTAL (BARREL)			5,552	LBS.
CULVERT EXCAVATION ---------- LUMP SUM				
FOUNDATION CONDITIONING MATERIAL 64 TONS				
REMOVAL OF EXISTING STRUCTURE --- LUMP SUM				

PROJECT NO. 17BP.10.R.21
UNION COUNTY
STATION: 12+03.18 -L-

SHEET 1 OF 5 REPLACE BRIDGE NO. 88

STATE OF NORTH CAROLINA
DEPARTMENT OF TRANSPORTATION
RALEIGH

BARREL STANDARD
DOUBLE 10 FT. W X 6 FT. H
CONCRETE BOX CULVERT
92° SKEW

NORTH CAROLINA PROFESSIONAL SEAL ENGINEER PAUL A. de PAOLI
10-15-12

ASSEMBLED BY : B.E. LANNING DATE : 09/12
CHECKED BY : P.A. de PAOLI DATE : 09/12
DRAWN BY : R.W. WRIGHT DATE : JULY, 1990
CHECKED BY : D.A. GLADDEN DATE : JULY, 1990

SPECIAL
STANDARD

MI ENGINEERING
1011 SCHAUB DRIVE, SUITE 100
RALEIGH, NC 27606
(919) 851-6606
FIRM PE NUMBER : P-0671

REVISIONS						SHEET NO.
NO.	BY:	DATE:	NO.	BY:	DATE:	C-1
1			3			TOTAL SHEETS
2			4			5

STD. NO. CB12A

10/15/2012
2:40:01 PM
User: jlsraeinalm
Filename: P:\NC Projects\M12003 - Div 10 Low Impact Bridge Replacement_MA Engineering\M12003.03_Union 88 RCBC\17BP10R21\Structures\17BP10R21_SD_CU1.dgn
ADDED NOV. 1, 1990

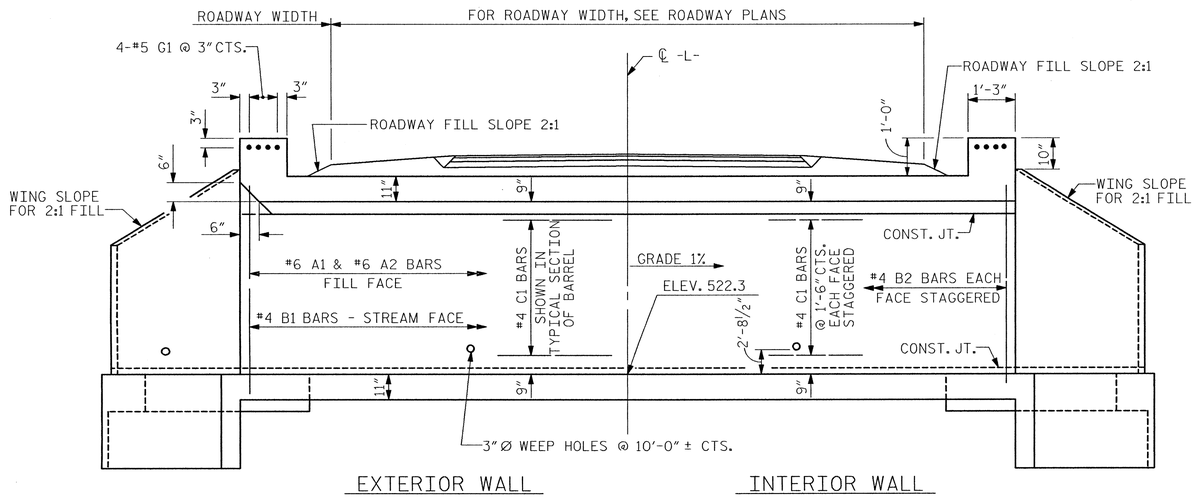

CULVERT SECTION NORMAL TO ROADWAY

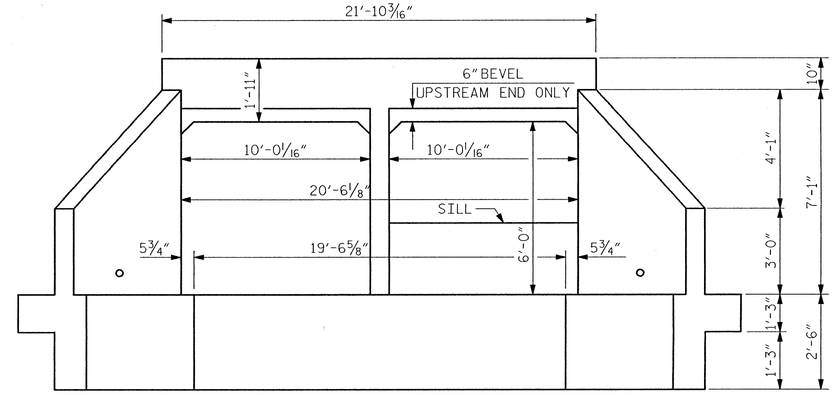

END ELEVATION NORMAL TO SKEW

(LOOKING DOWNSTREAM)

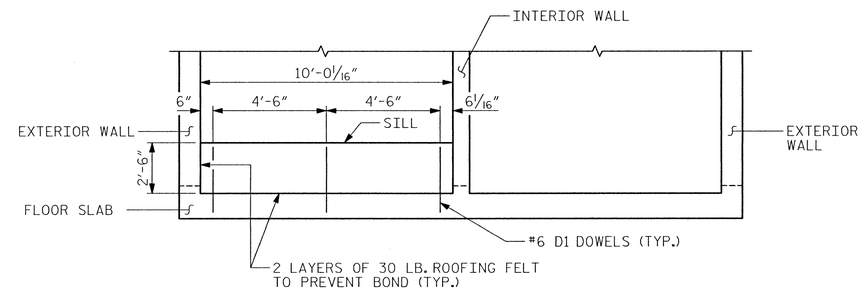

ELEVATION

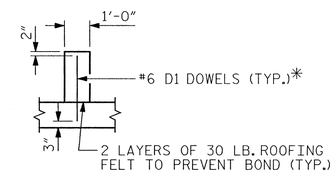

SECTION THROUGH SILL

*DOWELS MAY BE PUSHED INTO GREEN CONCRETE AFTER SLAB HAS BEEN FLOAT FINISHED.

CULVERT SILL DETAILS

(LOOKING UPSTREAM)

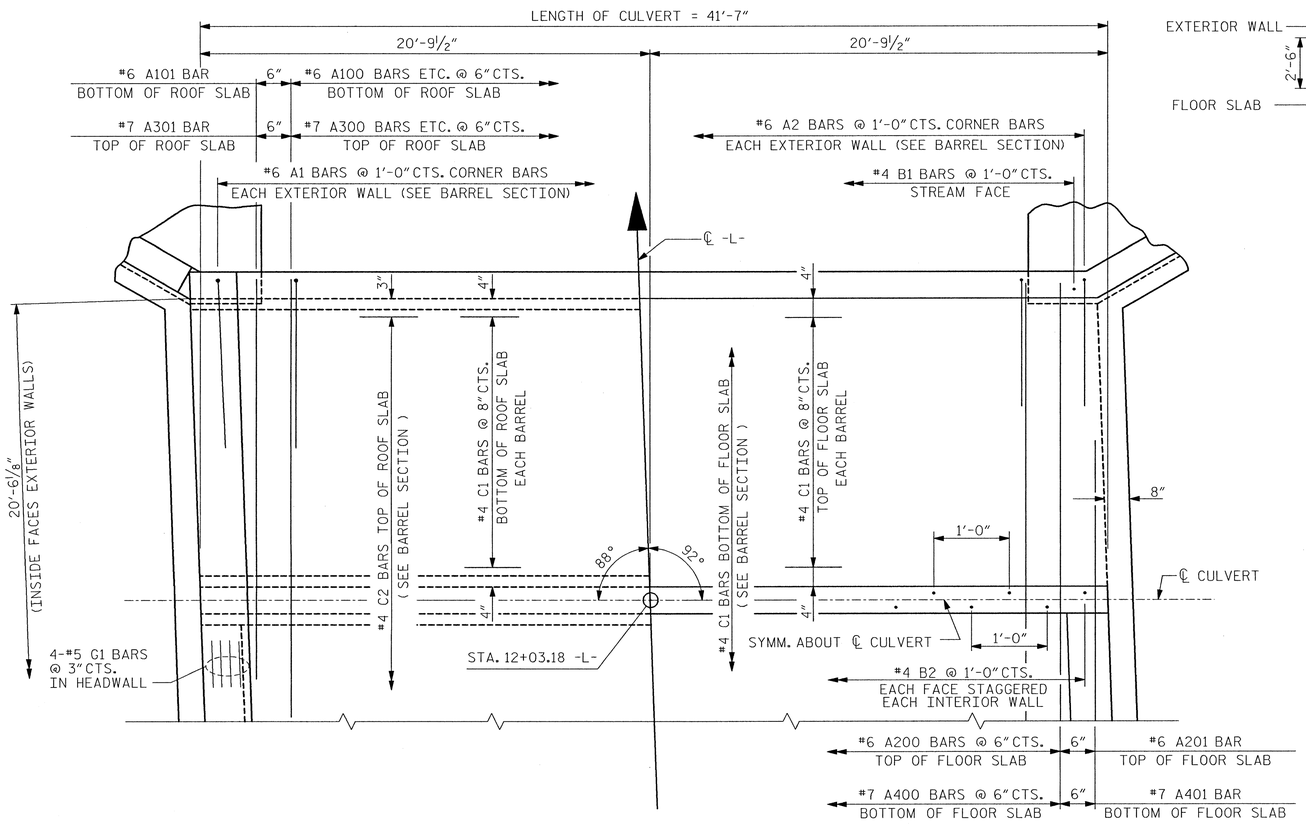

PART PLAN-ROOF SLAB

PART PLAN-FLOOR SLAB

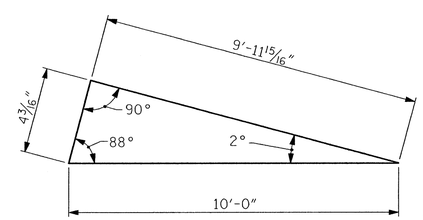

SKEW TRIANGLE

PROJECT NO. 17BP.10.R.21

UNION COUNTY

STATION: 12+03.18 -L-

SHEET 2 OF 5

STATE OF NORTH CAROLINA
DEPARTMENT OF TRANSPORTATION
RALEIGH

BARREL STANDARD DOUBLE 10 FT. W X 6 FT. H CONCRETE BOX CULVERT 92° SKEW

NORTH CAROLINA PROFESSIONAL SEAL 019199 ENGINEER PAUL A. de PAOLI
10-15-12

ASSEMBLED BY : B.E. LANNING	DATE : 09/12	SPECIAL	
CHECKED BY : P.A. de PAOLI	DATE : 09/12		
DRAWN BY : RALPH D. UNDERWOOD	DATE : MAY 1971	STANDARD	
CHECKED BY : JOEL A. JOHNSON	DATE : JULY 1971		

MI ENGINEERING
1011 SCHAUB DRIVE, SUITE 100
RALEIGH, NC 27606
(919) 851-6606
FIRM PE NUMBER : P-0671

REVISIONS						SHEET NO.
NO.	BY:	DATE:	NO.	BY:	DATE:	C-2
1			3			TOTAL SHEETS
2			4			5

STD. NO. CB12

10/15/2012
2:24:39 PM
User: jlsrcelnolm
Filename: P:\NC Projects\M12003 - Div 10 Low Impact Bridge Replacement_MA Engineering\M12003.03_Union 88 RCBC\17BP10R21\Structures\17BP10R21_SD_CU2.dgn
REVISED 11-19-99 BY MAM, CHECKED BY R.W.W.
REDRAWN NOV. 1990 BY TSS CHECKED BY ARB

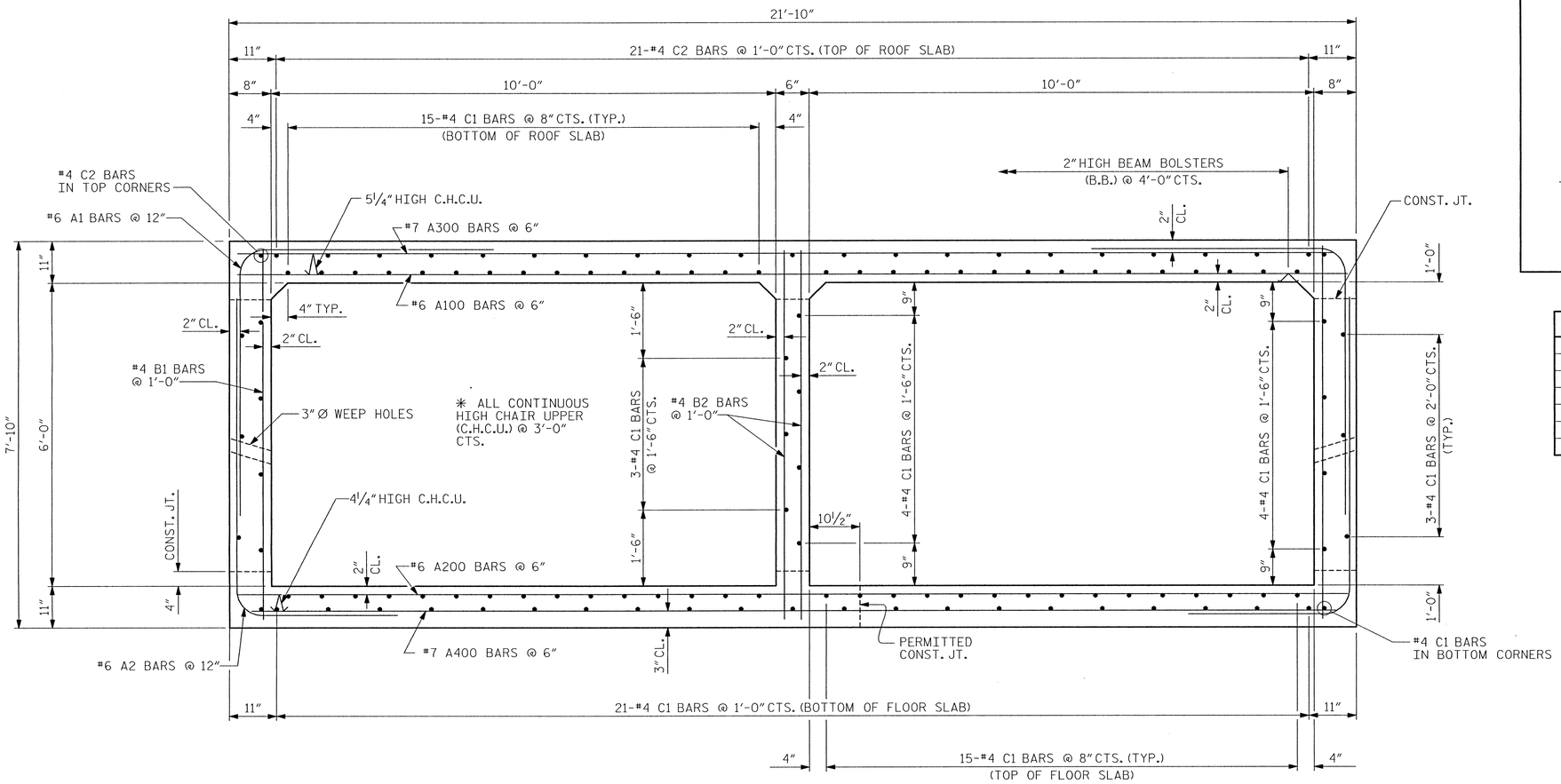

RIGHT ANGLE SECTION OF BARREL

THERE ARE 127 "C" BARS IN SECTION OF BARREL.

BAR TYPES

ALL BAR DIMENSIONS ARE OUT TO OUT.

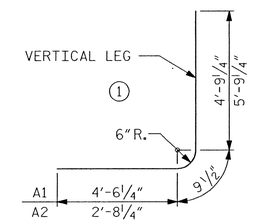

SPLICE LENGTH CHART

BAR	SIZE	SPLICE LENGTH
A1	#6	4'-3"
A200	#6	2'-9"
A400	#7	3'-9"
B	#4	1'-9"
C1	#4	1'-9"
C2	#4	2'-0"

BILL OF MATERIAL

BAR	NO.	SIZE	TYPE	LENGTH	WEIGHT
✳ A1	84	6	1	10'-1"	1,272
A2	84	6	1	9'-3"	1,167
A100	81	6	STR	21'-6"	2,616
A101	2	6	STR	13'-3"	40
A200	81	6	STR	21'-6"	2,616
A201	2	6	STR	13'-3"	40
✳ A300	81	7	STR	21'-6"	3,560
✳ A301	2	7	STR	13'-3"	54
A400	81	7	STR	21'-6"	3,560
A401	2	7	STR	13'-3"	54
B1	84	4	STR	7'-5"	416
B2	83	4	STR	7'-5"	411
C1	208	4	STR	21'-6"	2,987
✳ C2	46	4	STR	21'-8"	666
D1	12	6	STR	2'-1"	19
G1	8	5	STR	21'-6"	179

REINFORCING STEEL 14,105 LBS.

✳ EPOXY COATED REINFORCING STEEL 5,552 LBS.

PROJECT NO. 17BP.10.R.21

UNION COUNTY

STATION: 12+03.18 -L-

SHEET 3 OF 5

STATE OF NORTH CAROLINA
DEPARTMENT OF TRANSPORTATION
RALEIGH

TYPICAL SECTION DOUBLE 10 FT. W X 6 FT. H CONCRETE BOX CULVERT

NORTH CAROLINA PROFESSIONAL SEAL 023739 ENGINEER PAUL A. de PAOLI
10.15.12

MI ENGINEERING
1011 SCHAUB DRIVE, SUITE 100
RALEIGH, NC 27606
(919) 851-6606
FIRM PE NUMBER: P-0671

REVISIONS						SHEET NO.
NO.	BY:	DATE:	NO.	BY:	DATE:	C-3
1			3			TOTAL SHEETS
2			4			5

DRAWN BY : B.E. LANNING DATE : 09/12
CHECKED BY : P.A. de PAOLI DATE : 09/12

10/15/2012
2:27:22 PM
User: jlsrogenalm
Filename: P:\NC Projects\M12003 - Div 10 Low Impact Bridge Replacement_MA Engineering\M12003.03_Union 88 RCBC\17BP10R21\Structures\17BP10R21_SD_CU3.dgn

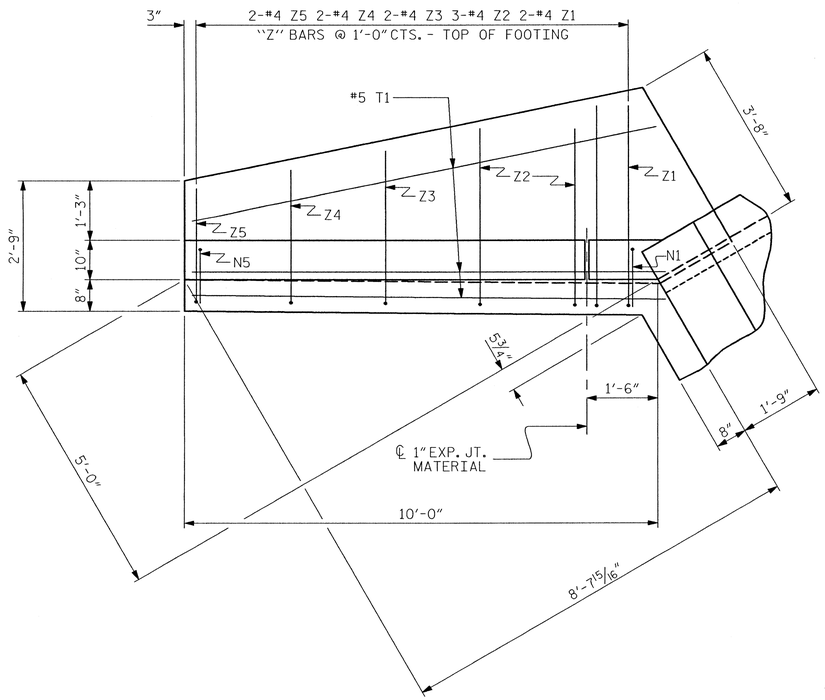

PLAN

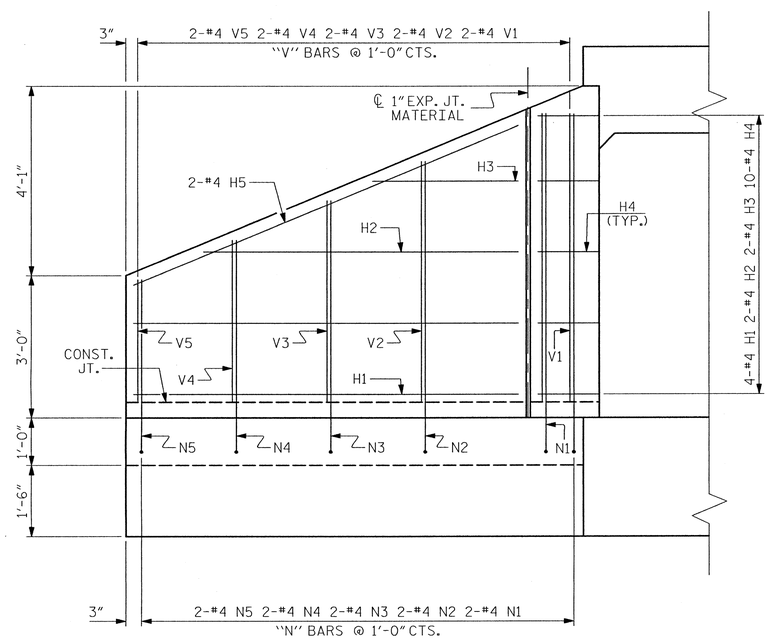

ELEVATION

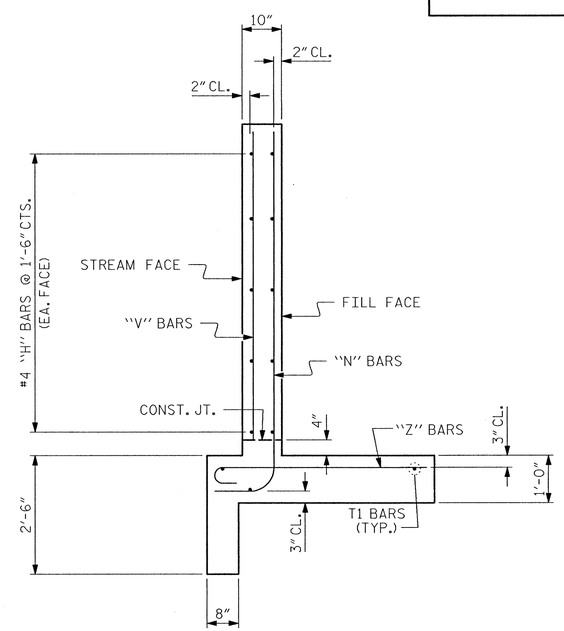

TYPICAL WING SECTION

BAR TYPES

ALL BAR DIMENSIONS ARE OUT TO OUT.

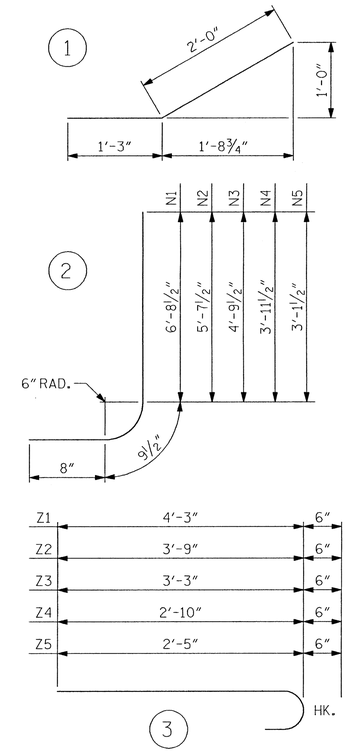

BILL OF MATERIAL

BAR	NO.	SIZE	TYPE	LENGTH	WEIGHT
H1	16	#4	STR	8'-1"	86
H2	8	#4	STR	6'-8"	36
H3	8	#4	STR	3'-1"	16
H4	40	#4	1	3'-3"	87
H5	8	#4	STR	8'-9"	47
N1	8	#4	2	8'-2"	44
N2	8	#4	2	7'-1"	38
N3	8	#4	2	6'-3"	33
N4	8	#4	2	5'-5"	29
N5	8	#4	2	4'-7"	24
T1	12	#5	STR	10'-0"	125
V1	8	#4	STR	6'-1"	33
V2	8	#4	STR	5'-1"	27
V3	8	#4	STR	4'-3"	23
V4	8	#4	STR	3'-5"	18
V5	8	#4	STR	2'-7"	14
Z1	8	#4	3	4'-9"	25
Z2	12	#4	3	4'-3"	34
Z3	8	#4	3	3'-9"	20
Z4	8	#4	3	3'-4"	18
Z5	8	#4	3	2'-11"	16

REINFORCING STEEL FOR 4 WINGS 793 LBS

CLASS A CONCRETE
- 4 WINGS 13.8 CY
- 2 HEADWALL 2.0 CY
- END CURTAIN WALLS 2.4 CY
- TOTAL 18.2 CY

PROJECT NO. 17BP.10.R.21

UNION COUNTY

STATION: 12+03.18 -L-

SHEET 4 OF 5

STATE OF NORTH CAROLINA
DEPARTMENT OF TRANSPORTATION
RALEIGH

STANDARD WINGS FOR CONCRETE BOX CULVERT

H = 6'-0" SLOPE = 2:1

90° SKEW

NORTH CAROLINA PROFESSIONAL SEAL ENGINEER PAUL A. de PAOLI
10.15.12

ASSEMBLED BY : B.E. LANNING DATE : 09/12
CHECKED BY : P.A. de PAOLI DATE : 09/12

DRAWN BY : CCJ 10/99
CHECKED BY : RWW 03/00

MI ENGINEERING
1011 SCHAUB DRIVE, SUITE 100
RALEIGH, NC 27606
(919) 851-6606
FIRM PE NUMBER : P-0671

REVISIONS							SHEET NO.
NO.	BY:	DATE:	NO.	BY:	DATE:		C-4
1			3				TOTAL SHEETS
2			4				5

STD. NO. CW9006

10/15/2012
2:31:11 PM
User: jlsraeinalm
Filename: P:\NC Projects\M12003 - Div 10 Low Impact Bridge Replacement_MA Engineering\M12003.03_Union 88 RCBC\17BP10R21\Structures\17BP10R21_SD_CU4.dgn

LOAD AND RESISTANCE FACTOR RATING (LRFR) SUMMARY FOR REINFORCED CONCRETE BOX CULVERTS

LEVEL		VEHICLE	WEIGHT (W) (TONS)	CONTROLLING LOAD RATING (#)	MINIMUM RATING FACTORS (RF)	TONS = W × RF	STRENGTH I LIMIT STATE									COMMENT NUMBER
								MOMENT				SHEAR				
							LIVE-LOAD FACTORS (γ_{LL})	RATING FACTOR	BOX NO.	ELEMENT TYPE	DISTANCE FROM LEFT END OF ELEMENT (ft)	RATING FACTOR	BOX NO.	ELEMENT TYPE	DISTANCE FROM LEFT END OF ELEMENT (ft)	
DESIGN LOAD RATING		HL-93 (INVENTORY)	N/A	1	1.05	--	1.75	1.05	1	EXTERIOR WALL	6.00	1.06	1	ROOF SLAB	10.00	
		HL-93 (OPERATING)	N/A		1.36	--	1.35	1.36	1	EXTERIOR WALL	6.00	1.38	1	ROOF SLAB	10.00	
		HS-20 (INVENTORY)	36.000	2	1.22	43.92	1.75	1.29	1	EXTERIOR WALL	6.00	1.22	1	ROOF SLAB	10.00	
		HS-20 (OPERATING)	36.000		1.58	56.88	1.35	1.67	1	EXTERIOR WALL	6.00	1.58	1	ROOF SLAB	10.00	
LEGAL LOAD RATING	SINGLE VEHICLE (SV)	SNSH	13.500		2.28	30.78	1.40	2.30	1	EXTERIOR WALL	6.00	2.28	1	ROOF SLAB	10.00	
		SNGARBS2	20.000		2.11	42.20	1.40	2.16	1	EXTERIOR WALL	6.00	2.11	1	ROOF SLAB	10.00	
		SNAGRIS2	22.000		2.22	48.84	1.40	2.30	1	EXTERIOR WALL	6.00	2.22	1	ROOF SLAB	10.00	
		SNCOTTS3	27.250	3	1.31	35.70	1.40	1.31	1	EXTERIOR WALL	6.00	1.32	1	ROOF SLAB	10.00	
		SNAGGRS4	34.925		1.58	55.18	1.40	1.64	1	INTERIOR WALL	6.00	1.58	1	ROOF SLAB	10.00	
		SNS5A	35.550		1.48	52.61	1.40	1.53	1	INTERIOR WALL	6.00	1.48	1	ROOF SLAB	10.00	
		SNS6A	39.950		1.42	56.73	1.40	1.53	1	INTERIOR WALL	6.00	1.42	1	ROOF SLAB	10.00	
		SNS7B	42.000		1.42	59.64	1.40	1.53	1	INTERIOR WALL	6.00	1.42	1	ROOF SLAB	10.00	
	TRUCK TRACTOR SEMI-TRAILER (TTST)	TNAGRIT3	33.000		1.78	58.74	1.40	2.30	1	EXTERIOR WALL	6.00	1.78	1	FLOOR SLAB	10.00	
		TNT4A	33.075		1.48	48.95	1.40	1.54	1	INTERIOR WALL	6.00	1.48	1	ROOF SLAB	10.00	
		TNT6A	41.600		1.45	60.32	1.40	1.52	1	INTERIOR WALL	6.00	1.45	1	ROOF SLAB	10.00	
		TNT7A	42.000		1.46	61.32	1.40	1.53	1	INTERIOR WALL	6.00	1.46	1	ROOF SLAB	10.00	
		TNT7B	42.000		1.45	60.90	1.40	1.52	1	INTERIOR WALL	6.00	1.45	1	ROOF SLAB	10.00	
		TNAGRIT4	43.000		1.41	60.63	1.40	1.54	1	INTERIOR WALL	6.00	1.41	1	ROOF SLAB	10.00	
		TNAGT5A	45.000		1.41	63.45	1.40	1.54	1	INTERIOR WALL	6.00	1.41	1	ROOF SLAB	10.00	
		TNAGT5B	45.000		1.37	61.65	1.40	1.54	1	INTERIOR WALL	6.00	1.37	1	FLOOR SLAB	10.00	

LOAD FACTORS:

DESIGN LOAD RATING FACTORS

LOAD TYPE	MAX FACTOR	MIN FACTOR
DC	1.25	0.90
DW	1.50	0.65
EV	1.30	0.90
EH	1.35	0.90
ES	1.35	0.90
LS	1.75	--
WA	1.00	--

NOTE:

RATING FACTORS ARE BASED ON THE STRENGTH I LIMIT STATE.

COMMENTS:

1. VERTICAL ELEMENTS ARE REFERENCED STARTING AT THE BOTTOM.
2.
3.
4.

(#) CONTROLLING LOAD RATING

(1) DESIGN LOAD RATING (HL-93)

(2) DESIGN LOAD RATING (HS-20)

(3) LEGAL LOAD RATING **

** SEE CHART FOR VEHICLE TYPE

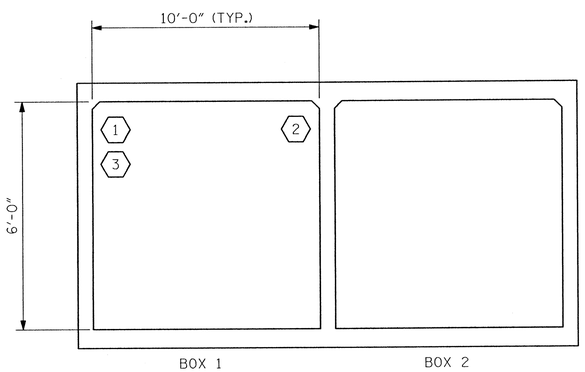

LRFR SUMMARY
(LOOKING DOWNSTREAM)

PROJECT NO. 17BP.10.R.21

UNION COUNTY

STATION: 12+03.18 -L-

SHEET 5 OF 5

STATE OF NORTH CAROLINA
DEPARTMENT OF TRANSPORTATION
RALEIGH

STANDARD

LRFR SUMMARY FOR REINFORCED CONCRETE BOX CULVERTS
(NON-INTERSTATE TRAFFIC)

NORTH CAROLINA PROFESSIONAL SEAL 19675 ENGINEER PAUL A. de PAOLI
10-15-12

MI ENGINEERING
1011 SCHAUB DRIVE, SUITE 100
RALEIGH, NC 27606
(919) 851-6606
FIRM PE NUMBER : P-0671

REVISIONS						SHEET NO.
NO.	BY:	DATE:	NO.	BY:	DATE:	C-5
1			3			TOTAL SHEETS
2			4			5

STD. NO. LRFR5

ASSEMBLED BY : B.E. LANNING DATE : 08/12
CHECKED BY : P.A. de PAOLI DATE : 09/12
DRAWN BY : WMC 7/11
CHECKED BY : GM 7/11
REV. 10/1/11 MAA/GM

10/15/2012
2:37:45 PM
User: jlsr-aalnalm
Filename: P:\NC Projects\MI2003 - Div 10 Low Impact Bridge Replacement_MA Engineering\MI2003.03_Union 88 RCBC\17BP10R21\Structures\17BP10R21_SD_CU5.dgn

STANDARD NOTES

DESIGN DATA:

SPECIFICATIONS	A.A.S.H.T.O. (CURRENT)
LIVE LOAD	SEE PLANS
IMPACT ALLOWANCE	SEE A.A.S.H.T.O.
STRESS IN EXTREME FIBER OF	
STRUCTURAL STEEL - AASHTO M270 GRADE 36	20,000 LBS. PER SQ. IN.
- AASHTO M270 GRADE 50W	27,000 LBS. PER SQ. IN.
- AASHTO M270 GRADE 50	27,000 LBS. PER SQ. IN.
REINFORCING STEEL IN TENSION	
GRADE 60	24,000 LBS. PER SQ. IN.
CONCRETE IN COMPRESSION	1,200 LBS. PER SQ. IN.
CONCRETE IN SHEAR	SEE A.A.S.H.T.O.
STRUCTURAL TIMBER - TREATED OR	
UNTREATED - EXTREME FIBER STRESS	1,800 LBS. PER SQ. IN.
COMPRESSION PERPENDICULAR TO GRAIN OF TIMBER	375 LBS. PER SQ. IN.
EQUIVALENT FLUID PRESSURE OF EARTH	30 LBS. PER CU. FT. (MINIMUM)

MATERIAL AND WORKMANSHIP:

EXCEPT AS MAY OTHERWISE BE SPECIFIED ON PLANS OR IN THE SPECIAL PROVISIONS, ALL MATERIAL AND WORKMANSHIP SHALL BE IN ACCORDANCE WITH THE 2012 "STANDARD SPECIFICATIONS FOR ROADS AND STRUCTURES" OF THE N. C. DEPARTMENT OF TRANSPORTATION.

STEEL SHEET PILING FOR PERMANENT OR TEMPORARY APPLICATIONS SHALL BE HOT ROLLED.

CONCRETE:

UNLESS OTHERWISE REQUIRED ON PLANS, CLASS A CONCRETE SHALL BE USED FOR ALL PORTIONS OF ALL STRUCTURES WITH THE EXCEPTION THAT: CLASS AA CONCRETE SHALL BE USED IN BRIDGE SUPERSTRUCTURES, ABUTMENT BACKWALLS, AND APPROACH SLABS; AND CLASS B CONCRETE SHALL BE USED FOR SLOPE PROTECTION AND RIP RAP.

CONCRETE CHAMFERS:

UNLESS OTHERWISE NOTED ON THE PLANS, ALL EXPOSED CORNERS ON STRUCTURES SHALL BE CHAMFERED 3/4" WITH THE FOLLOWING EXCEPTIONS: TOP CORNERS OF CURBS MAY BE ROUNDED TO 1-1/2" RADIUS WHICH IS BUILT INTO CURB FORMS; CORNERS OF TRANSVERSE FLOOR EXPANSION JOINTS SHALL BE ROUNDED WITH A 1/4" FINISHING TOOL UNLESS OTHERWISE REQUIRED ON PLANS; AND CORNERS OF EXPANSION JOINTS IN THE ROADWAY FACES AND TOPS OF CURBS AND SIDEWALKS SHALL BE ROUNDED TO A 1/4" RADIUS WITH A FINISHING STONE OR TOOL UNLESS OTHERWISE REQUIRED ON PLANS.

DOWELS:

DOWELS WHEN INDICATED ON PLANS AS FOR CULVERT EXTENSIONS, SHALL BE EMBEDDED AT LEAST 12" INTO THE OLD CONCRETE AND GROUTED INTO PLACE WITH 1:2 CEMENT MORTAR.

ALLOWANCE FOR DEAD LOAD DEFLECTION, SETTLEMENT, ETC. IN CASTING SUPERSTRUCTURES:

BRIDGES SHALL BE BUILT ON THE GRADE OR VERTICAL CURVE SHOWN ON PLANS. SLABS, CURBS AND PARAPETS SHALL CONFORM TO THE GRADE OR CURVE.

ALL DIMENSIONS WHICH ARE GIVEN IN SECTION AND ARE AFFECTED BY DEAD LOAD DEFLECTIONS ARE DIMENSIONS AT CENTER LINE OF BEARING UNLESS OTHERWISE NOTED ON PLANS. IN SETTING FORMS FOR STEEL BEAM BRIDGES AND PRESTRESSED CONCRETE GIRDER BRIDGES, ADJUSTMENTS SHALL BE MADE DUE TO THE DEAD LOAD DEFLECTIONS FOR THE ELEVATIONS SHOWN. WHERE BLOCKS ARE SHOWN OVER BEAMS FOR BUILDING UP TO THE SLAB, THE VERTICAL DIMENSIONS OF THE BLOCKS SHALL BE ADJUSTED BETWEEN BEARINGS TO COMPENSATE FOR DEAD LOAD DEFLECTIONS, VERTICAL CURVE ORDINATE, AND ACTUAL BEAM CAMBER. WHERE BOTTOM OF SLAB IS IN LINE WITH BOTTOM OF TOP FLANGES, DEPTH OF SLAB BETWEEN BEARINGS SHALL BE ADJUSTED TO COMPENSATE FOR DEAD LOAD DEFLECTION, VERTICAL CURVE ORDINATE, AND ACTUAL BEAM CAMBER.

IN SETTING FALSEWORK AND FORMS FOR REINFORCED CONCRETE SPANS, AN ALLOWANCE SHALL BE MADE FOR DEAD LOAD DEFLECTIONS, SETTLEMENT OF FALSEWORK, AND PERMANENT CAMBER WHICH SHALL BE PROVIDED FOR IN ADDITION TO THE ELEVATIONS SHOWN. AFTER REMOVAL OF THE FALSEWORK, THE FINISHED STRUCTURES SHALL CONFORM TO THE PROFILE AND ELEVATIONS SHOWN ON THE PLANS AND CONSTRUCTION ELEVATIONS FURNISHED BY THE ENGINEER.

DETAILED DRAWINGS FOR FALSEWORK OR FORMS FOR BRIDGE SUPERSTRUCTURE AND ANY STRUCTURE OR PARTS OF A STRUCTURE AS NOTED ON THE PLANS SHALL BE SUBMITTED TO THE ENGINEER FOR APPROVAL BEFORE CONSTRUCTION OF THE FALSEWORK OR FORMS IS STARTED.

REINFORCING STEEL:

ALL REINFORCING STEEL SHALL BE DEFORMED. DIMENSIONS RELATIVE TO PLACEMENT OF REINFORCING ARE TO CENTERS OF BARS UNLESS OTHERWISE INDICATED IN THE PLANS. DIMENSIONS ON BAR DETAILS ARE TO CENTERS OF BARS OR ARE OUT TO OUT AS INDICATED ON PLANS.

WIRE BAR SUPPORTS SHALL BE PROVIDED FOR REINFORCING STEEL WHERE INDICATED ON THE PLANS. WHEN BAR SUPPORT PIECES ARE PLACED IN CONTINUOUS LINES, THEY SHALL BE SO PLACED THAT THE ENDS OF THE SUPPORTING WIRES SHALL BE LAPPED TO LOCK LEGS ON ADJOINING PIECES.

STRUCTURAL STEEL:

AT THE CONTRACTOR'S OPTION, HE MAY SUBSTITUTE 7/8" Ø SHEAR STUDS FOR THE 3/4" Ø STUDS SPECIFIED ON THE PLANS. THIS SUBSTITUTION SHALL BE MADE AT THE RATE OF 3 - 7/8" Ø STUDS FOR 4 - 3/4" Ø STUDS, AND STUD SPACING CHANGES SHALL BE MADE AS NECESSARY TO PROVIDE THE SAME EQUIVALENT NUMBER OF 7/8" Ø STUDS ALONG THE BEAM AS SHOWN FOR 3/4" Ø STUDS BASED ON THE RATIO OF 3 - 7/8" Ø STUDS FOR 4 - 3/4" Ø STUDS. STUDS OF THE LENGTH SPECIFIED ON THE PLANS MUST BE PROVIDED. THE MAXIMUM SPACING SHALL BE 2'-0".

EXCEPT AT THE INTERIOR SUPPORTS OF CONTINUOUS BEAMS WHERE THE COVER PLATE IS IN CONTACT WITH BEARING PLATE, THE CONTRACTOR MAY, AT HIS OPTION, SUBSTITUTE FOR THE COVER PLATES DESIGNATED ON THE PLANS COVER PLATES OF THE EQUIVALENT AREA PROVIDED THESE PLATES ARE AT LEAST 5/16" IN THICKNESS AND DO NOT EXCEED A WIDTH EQUAL TO THE FLANGE WIDTH LESS 2" OR A THICKNESS EQUAL TO 2 TIMES THE FLANGE THICKNESS. THE SIZE OF FILLET WELDS SHALL CONFORM TO THE REQUIREMENTS OF THE CURRENT ANSI/AASHTO/AWS "BRIDGE WELDING CODE". ELECTROSLAG WELDING WILL NOT BE PERMITTED.

WITH THE SOLE EXCEPTION OF EDGES AT SURFACES WHICH BEAR ON OTHER SURFACES, ALL SHARP EDGES AND ENDS OF SHAPES AND PLATES SHALL BE SLIGHTLY ROUNDED BY SUITABLE MEANS TO A RADIUS OF APPROXIMATELY 1/16 INCH OR EQUIVALENT FLAT SURFACE AT A SUITABLE ANGLE PRIOR TO PAINTING, GALVANIZING, OR METALLIZING.

HANDRAILS AND POSTS:

METAL STANDARDS AND FACES OF THE CONCRETE END POSTS FOR THE METAL RAIL SHALL BE SET NORMAL TO THE GRADE OF THE CURB, UNLESS OTHERWISE SHOWN ON PLANS. THE METAL RAIL AND TOPS OF CONCRETE POSTS USED WITH THE ALUMINUM RAIL SHALL BE BUILT PARALLEL TO THE GRADE OF THE CURB.

METAL HANDRAILS SHALL BE IN ACCORDANCE WITH THE PLANS. RAILS SHALL BE AS MANUFACTURED FOR BRIDGE RAILING. CASTINGS SHALL BE OF A UNIFORM APPEARANCE. FINS AND OTHER DEFORMATIONS RESULTING FROM CASTING OR OTHERWISE SHALL BE REMOVED IN A MANNER SO THAT A UNIFORM COLORING OF THE COMPLETED CASTING SHALL BE OBTAINED. CASTINGS WITH DISCOLORATIONS OR OF NON-UNIFORM COLORING WILL NOT BE ACCEPTED. CERTIFIED MILL REPORTS ARE REQUIRED FOR METAL RAILS AND POSTS.

SPECIAL NOTES:

GENERALLY, IN CASE OF DISCREPANCY, THIS STANDARD SHEET OF NOTES SHALL GOVERN OVER THE SPECIFICATIONS, BUT THE REMAINDER OF THE PLANS SHALL GOVERN OVER NOTES HEREON, AND SPECIAL PROVISIONS SHALL GOVERN OVER ALL. SEE SPECIFICATIONS ARTICLE 105-4.

ENGLISH

JANUARY, 1990