This electronic collection of documents is provided for the convenience of the user and is Not a Certified Document –

The documents contained herein were originally issued and sealed by the individuals whose names and license numbers appear on each page, on the dates appearing with their signature on that page.
This file or an individual page shall not be considered a certified document.

DocuSign Envelope ID: DACA551D-EFD3-4964-B169-BD4A21FC842B

09/08/99

TIP PROJECT: U-6091

STATE	STATE PROJECT REFERENCE NO.	SHEET NO.	TOTAL SHEETS
N.C.	U-6091	1	

STATE PROJ. NO.	F.A. PROJ. NO.	DESCRIPTION
47885.1.1	STBGDA-1003(167)	PE
47885.2.1	STBGDA-1003(167)	R/W & UTIL.
47885.3.1	STBGDA-1003(167)	CONSTRUCTION

STATE OF NORTH CAROLINA
DIVISION OF HIGHWAYS

UNION COUNTY

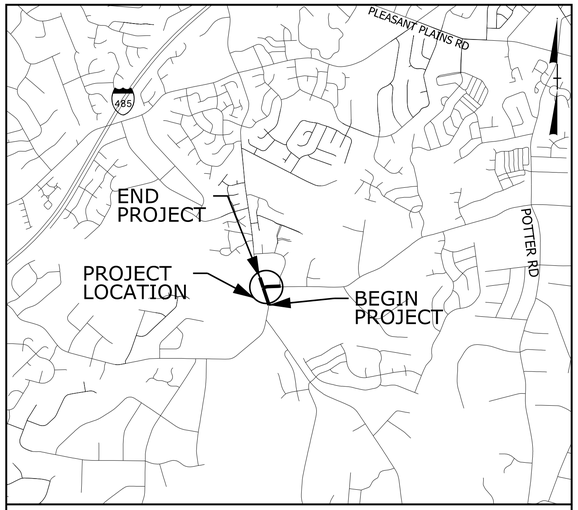

VICINITY MAP NOT TO SCALE

LOCATION: ***INTERSECTION OF MATTHEWS WEDDINGTON ROAD (SR 1345) AND CHESTNUT LANE (SR 1362)***

TYPE OF WORK: ***GRADING, PAVING, PAVEMENT REMOVAL, DRAINAGE, CONCRETE ISLANDS, & THERMOPLASTIC PAVEMENT MARKINGS***

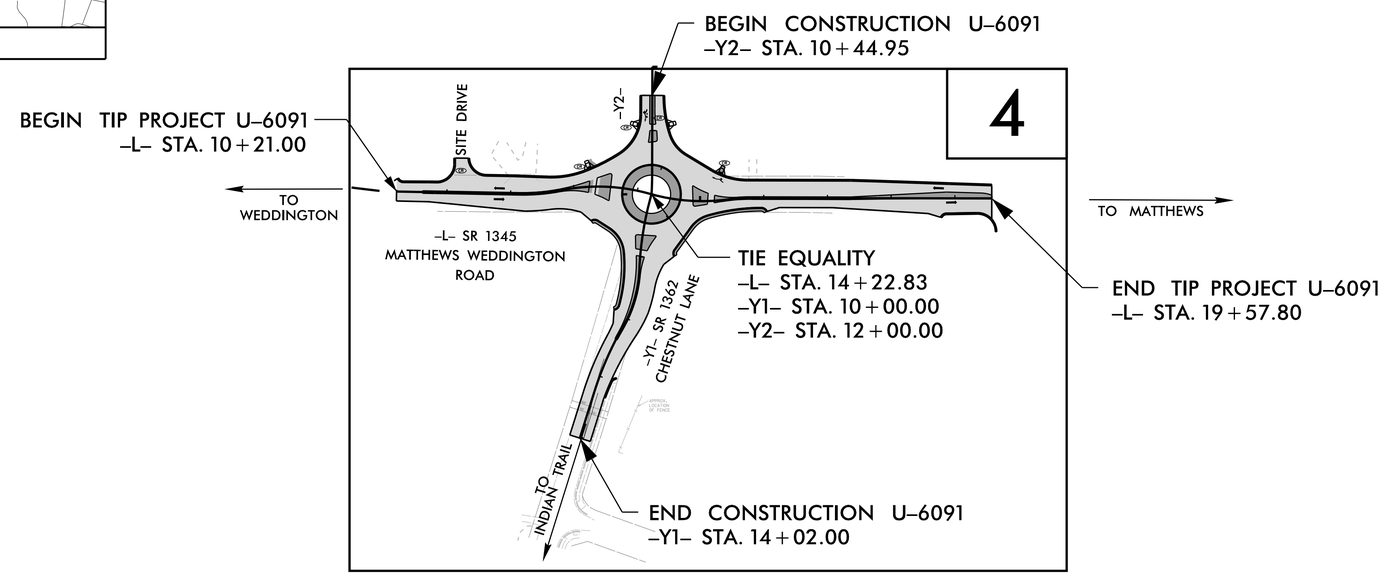

NCDOT CONTACT:
RANDY BOWERS, P.E.
NCDOT – DIVISION 10
716 W. MAIN STREET
ALBEMARLE, NC 28001

NAD 83 NC GRID NA 2011

DOCUMENT NOT CONSIDERED FINAL UNLESS ALL SIGNATURES COMPLETED

CONTRACT: DJ00364

6/07/2017

GRAPHIC SCALES

50 25 0 50 100
PLANS

50 25 0 50 100
PROFILE (HORIZONTAL)

10 5 0 10 20
PROFILE (VERTICAL)

DESIGN DATA

ADT 2018 = 21,000 VPD
ADT 2040 = 26,150 VPD

K = 4%
D = 56%
T = 2%*
V = 40 MPH

FUNCTIONAL CLASSIFICATION: MAJOR COLLECTOR

* 1% TTST 1% DUAL
SUB REGIONAL TIER

PROJECT LENGTH

LENGTH ROADWAY TIP PROJECT U-6091 = 0.177 MILES
TOTAL LENGTH TIP PROJECT U-6091 = 0.177 MILES

PLANS PREPARED FOR THE NCDOT BY:

Kimley»Horn © 2020
NC LICENSE #F-0102
200 SOUTH TRYON, SUITE 200
CHARLOTTE, NORTH CAROLINA 28202
PHONE: (704) 333-5131

2018 STANDARD SPECIFICATIONS

RIGHT OF WAY DATE:
7/15/2019

LETTING DATE:
MAY 2020

FRANK D. MASTERSON, P.E.
PROJECT ENGINEER

BEN J. VONDENBRINK
PROJECT DESIGN ENGINEER

RANDY BOWERS
PROJECT ENGINEER
NCDOT ROADWAY DESIGN COORDINATION SECTION

HYDRAULICS ENGINEER

NORTH CAROLINA PROFESSIONAL SEAL 052615 ENGINEER JASON D. LAWING
DocuSigned by: Jason D. Lawing

2/21/2020 *P.E.*
SIGNATURE:

ROADWAY DESIGN ENGINEER

NORTH CAROLINA PROFESSIONAL SEAL 037923 ENGINEER FRANK D. MASTERSON, JR.
DocuSigned by: Frank D. Masterson, Jr.

2/19/2020 *P.E.*
SIGNATURE:

STATE OF NORTH CAROLINA DEPARTMENT OF TRANSPORTATION

PROJECT REFERENCE NO.	SHEET NO.
U-6091	1A

INDEX OF SHEETS

SHEET NUMBER	SHEET
1	TITLE SHEET
1A	INDEX OF SHEETS, GENERAL NOTES, LIST OF ROADWAY STANDARD DRAWINGS
1B	CONVENTIONAL SYMBOLS SHEET
RW-01 THRU RW02C-2	SURVEY CONTROL SHEETS
RW02D-1	PROPOSED ALIGNMENT CONTROL SHEET
RW03E-1 THRU RW04	RIGHT OF WAY AND PERMANENT EASEMENT CONTROL SHEET
2A-1 THRU 2A-3	PAVEMENT SCHEDULE, TYPICAL SECTIONS, AND MISCELLANEOUS DETAILS
2B-1	PAVEMENT REMOVAL DETAIL SHEET
2B-2	ROUNDABOUT GEOMETRY SHEET
2B-3	CURB ALIGNMENTS SHEET
3B-1	SUMMARY OF EARTHWORK SHEET
3B-2	RIGHT OF WAY DATA AND PARCEL INDEX SHEET
3D-1	DRAINAGE SUMMARY SHEET
4	PLAN SHEETS
5 THRU 6	PROFILE SHEETS
TMP-1 THRU TMP-4	TRANSPORTATION MANAGEMENT PLAN
EC-1 THRU EC-5	EROSION CONTROL PLAN SHEETS
PMP-1 THRU PMP-2	PAVEMENT MARKING PLAN SHEETS
SIGN-1 THRU SIGN-3	SIGNING PLAN SHEETS
UC-1 THRU UC-5	UTILITY CONSTRUCTION PLANS
X-1	CROSS-SECTION INDEX
X-2 THRU X-9	CROSS-SECTIONS

GENERAL NOTES

2018 SPECIFICATIONS

EFFECTIVE: 06-03-2019
REVISED: 02-06-2020

GRADE LINE:
GRADING AND SURFACING OR RESURFACING AND WIDENING:

THE GRADE LINES SHOWN DENOTE THE FINISHED ELEVATION OF THE PROPOSED SURFACING AT GRADE POINTS SHOWN ON THE TYPICAL SECTIONS. WHERE NO GRADE LINES ARE SHOWN, THE PROFILES SHOWN DENOTE THE TOP ELEVATION OF THE EXISTING PAVEMENT ALONG THE CENTER LINE OF SURVEY ON WHICH THE PROPOSED RESURFACING WILL BE PLACED. GRADE LINES MAY BE ADJUSTED BY THE ENGINEER IN ORDER TO SECURE A PROPER TIE-IN.

CLEARING:

CLEARING ON THIS PROJECT SHALL BE PERFORMED TO THE LIMITS ESTABLISHED BY METHOD III. THIS PROJECT IS WITHIN THE MUNICIPAL BOUNDARY OF UNION COUNTY.

SUPERELEVATION:

ALL CURVES ON THIS PROJECT SHALL BE SUPERELEVATED IN ACCORDANCE WITH STD. NO. 225.04 USING THE RATE OF SUPERELEVATION AND RUNOFF SHOWN ON THE PLANS. SUPERELEVATION IS TO BE REVOLVED ABOUT THE GRADE POINTS SHOWN ON THE TYPICAL SECTIONS.

SHOULDER CONSTRUCTION:

ASPHALT, EARTH, AND CONCRETE SHOULDER CONSTRUCTION ON THE HIGH SIDE OF SUPERELEVATED CURVES SHALL BE IN ACCORDANCE WITH STD. NO. 560.02

SIDE ROADS:

THE CONTRACTOR WILL BE REQUIRED TO DO ALL NECESSARY WORK TO PROVIDE SUITABLE CONNECTIONS WITH ALL ROADS, STREETS, AND DRIVES ENTERING THIS PROJECT. THIS WORK WILL BE PAID FOR AT THE CONTRACT UNIT PRICE FOR THE PARTICULAR ITEMS INVOLVED.

SUBSURFACE DRAINS:

SUBSURFACE DRAINS SHALL BE CONSTRUCTED IN ACCORDANCE WITH STD. NO. 815.02 AT LOCATIONS DIRECTED BY THE ENGINEER.

UNDERDRAINS:

UNDERDRAINS SHALL BE CONSTRUCTED IN ACCORDANCE WITH STD. NO. 815.03 AT LOCATIONS DIRECTED BY THE ENGINEER.

STREET TURNOUT:

STREET RETURNS SHALL BE CONSTRUCTED IN ACCORDANCE WITH STD. NO. 848.04 USING THE RADII NOTED ON PLANS.

SUBSURFACE PLANS:

NO SUBSURFACE PLANS ARE AVAILABLE ON THIS PROJECT. THE CONTRACTOR SHOULD MAKE HIS OWN INVESTIGATION AS TO THE SUBSURFACE CONDITIONS.

CURB RAMPS

CURB RAMPS ARE SHOWN ON THE PLANS AT APPROXIMATE LOCATIONS. CONSTRUCT ALL CURB RAMPS ACCORDANCE WITH STD 848.05 AND/OR 848.06 AND/OR DETAILS SHOWN IN THE PLANS.

RIGHT-OF-WAY MARKERS:

ALL RIGHT-OF-WAY MARKERS ON THIS PROJECT SHALL BE PLACED BY CONTRACT.

UTILITIES:

UTILITY OWNERS ON THIS PROJECT ARE:

UNION POWER
MARK MCCLAMROCK
704-221-2355
Mark.mclamrock@union-power.com

PIEDMONT NATURAL GAS
MICHAEL CORRIGAN
980-722-8705
MCorrigan@maserconsulting.com

SPECTRUM
RYAN GODWIN
980-406-1721
Timothy.Godwin@charter.com

SEGRA
ROBERT ROBINSON
803-726-8337
Robert.Robinson@SEGRA.com

WINDSTREAM
BRENT WHITLOCK
803-577-5888
Brent.Whitlock@BYERS.COM

CENTURYLINK
MICHAEL CASEY
980-215-5007
michael.e.casey@centurylink.com

CONTERRA
ERIC WOODS
540-605-0653
ewoods@conterra.com

VERIZON
ANTHONY PACE
980-505-2489
Anthony.pace@verizon.com

RIGHT-OF-WAY MARKERS:

ALL RIGHT-OF-WAY MARKERS ON THIS PROJECT SHALL BE PLACED BY CONTRACT.

ROADWAY STANDARD DRAWINGS

2018 ROADWAY ENGLISH STANDARD DRAWINGS

EFFECTIVE: 01-16-2018
REVISED: 01-06-2020

THE FOLLOWING ROADWAY STANDARDS AS APPEAR IN "ROADWAY STANDARD DRAWINGS" HIGHWAY DESIGN BRANCH - N. C. DEPARTMENT OF TRANSPORTATION - RALEIGH, N. C., DATED JANUARY, 2018 ARE APPLICABLE TO THIS PROJECT AND BY REFERENCE HEREBY ARE CONSIDERED A PART OF THESE PLANS:

STD.NO. TITLE

DIVISION 2 - EARTHWORK

200.03 METHOD OF CLEARING - METHOD III
225.01 GUIDE FOR GRADING SUBGRADE - INTERSTATE AND FREEWAY
225.04 METHOD OF OBTAINING SUPERELEVATION - TWO LANE PAVEMENT
225.05 METHOD OF OBTAINING SUPERELEVATION - DIVIDED HIGHWAYS

DIVISION 3 - PIPE CULVERTS

300.01 METHOD OF PIPE INSTALLATION
300.03 CROSS PIPE END SECTION

DIVISION 5 - SUBGRADE, BASES AND SHOULDERS

560.01 METHOD OF SHOULDER CONSTRUCTION - HIGH SIDE OF SUPERELEVATED CURVE - METHOD I
560.02 METHOD OF SHOULDER CONSTRUCTION - HIGH SIDE OF SUPERELEVATED CURVE - METHOD II

DIVISION 6 - ASPHALT BASES AND PAVEMENTS

654.01 PAVEMENT REPAIRS

DIVISION 8 - INCIDENTALS

815.03 PIPE UNDERDRAIN AND BLIND DRAIN
840.01 BRICK CATCH BASIN - 12" THRU 54" PIPE
840.02 CONCRETE CATCH BASIN - 12" THRU 54" PIPE
840.03 FRAME, GRATES AND HOOD - FOR USE ON STANDARD CATCH BASIN
840.14 CONCRETE DROP INLET - 12" THRU 30" PIPE
840.31 CONCRETE JUNCTION BOX - 12" THRU 66" PIPE
840.32 BRICK JUNCTION BOX - 12" THRU 66" PIPE
840.34 TRAFFIC BEARING JUNCTION BOX - FOR USE WITH PIPES 42" AND UNDER
840.45 PRECAST DRAINAGE STRUCTURE
840.46 TRAFFIC BEARING PRECAST DRAINAGE STRUCTURE
840.54 MANHOLE FRAME AND COVER
840.66 DRAINAGE STRUCTURE STEPS
846.01 CONCRETE CURB, GUTTER AND CURB & GUTTER
848.01 CONCRETE SIDEWALK
848.02 DRIVEWAY TURNOUT - RADIUS TYPE
848.04 STREET TURNOUT
848.05 CURB RAMP - PROPOSED CURB & GUTTER
852.01 CONCRETE ISLANDS
876.01 RIP RAP IN CHANNELS
876.02 GUIDE FOR RIP RAP AT PIPE OUTLETS
876.04 DRAINAGE DITCHES WITH CLASS 'B' RIP RAP

2/02/2017

PROJECT REFERENCE NO.	SHEET NO.
U-6091	1B

STATE OF NORTH CAROLINA, DIVISION OF HIGHWAYS

CONVENTIONAL PLAN SHEET SYMBOLS

Note: Not to Scale **S.U.E. = Subsurface Utility Engineering*

BOUNDARIES AND PROPERTY:

- State Line
- County Line
- Township Line
- City Line
- Reservation Line
- Property Line
- Existing Iron Pin — EIP
- Property Corner
- Property Monument — ECM
- Parcel/Sequence Number — 123
- Existing Fence Line
- Proposed Woven Wire Fence
- Proposed Chain Link Fence
- Proposed Barbed Wire Fence
- Existing Wetland Boundary — WLB
- Proposed Wetland Boundary — WLB
- Existing Endangered Animal Boundary — EAB
- Existing Endangered Plant Boundary — EPB
- Existing Historic Property Boundary — HPB
- Known Contamination Area: Soil
- Potential Contamination Area: Soil
- Known Contamination Area: Water
- Potential Contamination Area: Water
- Contaminated Site: Known or Potential

BUILDINGS AND OTHER CULTURE:

- Gas Pump Vent or U/G Tank Cap
- Sign — S
- Well — W
- Small Mine
- Foundation
- Area Outline
- Cemetery
- Building
- School
- Church
- Dam

HYDROLOGY:

- Stream or Body of Water
- Hydro, Pool or Reservoir
- Jurisdictional Stream — JS
- Buffer Zone 1 — BZ 1
- Buffer Zone 2 — BZ 2
- Flow Arrow
- Disappearing Stream
- Spring
- Wetland
- Proposed Lateral, Tail, Head Ditch — FLOW
- False Sump

RAILROADS:

- Standard Gauge — CSX TRANSPORTATION
- RR Signal Milepost — MILEPOST 35
- Switch — SWITCH
- RR Abandoned
- RR Dismantled

RIGHT OF WAY:

- Baseline Control Point
- Existing Right of Way Marker
- Existing Right of Way Line
- Proposed Right of Way Line — RW
- Proposed Right of Way Line with Iron Pin and Cap Marker — RW
- Proposed Right of Way Line with Concrete or Granite R/W Marker — RW
- Proposed Control of Access Line with Concrete C/A Marker — CA
- Existing Control of Access — CA
- Proposed Control of Access — CA
- Existing Easement Line — E
- Proposed Temporary Construction Easement — E
- Proposed Temporary Drainage Easement — TDE
- Proposed Permanent Drainage Easement — PDE
- Proposed Permanent Drainage / Utility Easement — DUE
- Proposed Permanent Utility Easement — PUE
- Proposed Temporary Utility Easement — TUE
- Proposed Aerial Utility Easement — AUE
- Proposed Permanent Easement with Iron Pin and Cap Marker

ROADS AND RELATED FEATURES:

- Existing Edge of Pavement
- Existing Curb
- Proposed Slope Stakes Cut — C
- Proposed Slope Stakes Fill — F
- Proposed Curb Ramp — CR
- Existing Metal Guardrail
- Proposed Guardrail
- Existing Cable Guiderail
- Proposed Cable Guiderail
- Equality Symbol
- Pavement Removal

VEGETATION:

- Single Tree
- Single Shrub
- Hedge
- Woods Line
- Orchard
- Vineyard — Vineyard

EXISTING STRUCTURES:

MAJOR:

- Bridge, Tunnel or Box Culvert — CONC
- Bridge Wing Wall, Head Wall and End Wall — CONC WW

MINOR:

- Head and End Wall — CONC HW
- Pipe Culvert
- Footbridge
- Drainage Box: Catch Basin, DI or JB — CB
- Paved Ditch Gutter
- Storm Sewer Manhole — S
- Storm Sewer — S

UTILITIES:

POWER:

- Existing Power Pole
- Proposed Power Pole
- Existing Joint Use Pole
- Proposed Joint Use Pole
- Power Manhole — P
- Power Line Tower
- Power Transformer
- U/G Power Cable Hand Hole
- H-Frame Pole
- U/G Power Line LOS B (S.U.E.*) — P
- U/G Power Line LOS C (S.U.E.*) — P
- U/G Power Line LOS D (S.U.E.*) — P

TELEPHONE:

- Existing Telephone Pole
- Proposed Telephone Pole
- Telephone Manhole — T
- Telephone Pedestal — T
- Telephone Cell Tower
- U/G Telephone Cable Hand Hole
- U/G Telephone Cable LOS B (S.U.E.*) — T
- U/G Telephone Cable LOS C (S.U.E.*) — T
- U/G Telephone Cable LOS D (S.U.E.*) — T
- U/G Telephone Conduit LOS B (S.U.E.*) — TC
- U/G Telephone Conduit LOS C (S.U.E.*) — TC
- U/G Telephone Conduit LOS D (S.U.E.*) — TC
- U/G Fiber Optics Cable LOS B (S.U.E.*) — T FO
- U/G Fiber Optics Cable LOS C (S.U.E.*) — T FO
- U/G Fiber Optics Cable LOS D (S.U.E.*) — T FO

WATER:

- Water Manhole — W
- Water Meter
- Water Valve
- Water Hydrant
- U/G Water Line LOS B (S.U.E*) — W
- U/G Water Line LOS C (S.U.E*) — W
- U/G Water Line LOS D (S.U.E*) — W
- Above Ground Water Line — A/G Water

TV:

- TV Pedestal — C
- TV Tower
- U/G TV Cable Hand Hole — HH
- U/G TV Cable LOS B (S.U.E.*) — TV
- U/G TV Cable LOS C (S.U.E.*) — TV
- U/G TV Cable LOS D (S.U.E.*) — TV
- U/G Fiber Optic Cable LOS B (S.U.E.*) — TV FO
- U/G Fiber Optic Cable LOS C (S.U.E.*) — TV FO
- U/G Fiber Optic Cable LOS D (S.U.E.*) — TV FO

GAS:

- Gas Valve
- Gas Meter
- U/G Gas Line LOS B (S.U.E.*) — G
- U/G Gas Line LOS C (S.U.E.*) — G
- U/G Gas Line LOS D (S.U.E.*) — G
- Above Ground Gas Line — A/G Gas

SANITARY SEWER:

- Sanitary Sewer Manhole
- Sanitary Sewer Cleanout
- U/G Sanitary Sewer Line — SS
- Above Ground Sanitary Sewer — A/G Sanitary Sewer
- SS Forced Main Line LOS B (S.U.E.*) — FSS
- SS Forced Main Line LOS C (S.U.E.*) — FSS
- SS Forced Main Line LOS D (S.U.E.*) — FSS

MISCELLANEOUS:

- Utility Pole
- Utility Pole with Base
- Utility Located Object
- Utility Traffic Signal Box — S
- Utility Unknown U/G Line LOS B (S.U.E.*) — ?UTL
- U/G Tank; Water, Gas, Oil
- Underground Storage Tank, Approx. Loc. — UST
- A/G Tank; Water, Gas, Oil
- Geoenvironmental Boring
- U/G Test Hole LOS A (S.U.E.*)
- Abandoned According to Utility Records — AATUR
- End of Information — E.O.I.

2/25/2020

DocuSign Envelope ID: C5AC3E2C-68A1-4D12-8689-B588EA2E62B3

09/08/99

TIP PROJECT: U-6091

STATE	STATE PROJECT REFERENCE NO.	SHEET NO.	TOTAL SHEETS
N.C.	U-6091	RW01	07

STATE OF NORTH CAROLINA
DIVISION OF HIGHWAYS

SURVEY CONTROL, EXISTING CENTERLINES, RIGHT OF WAY, EASEMENTS AND PROPERTY TIES

UNION COUNTY

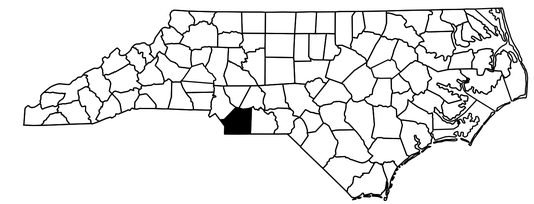

NAD 83/
NA 2011

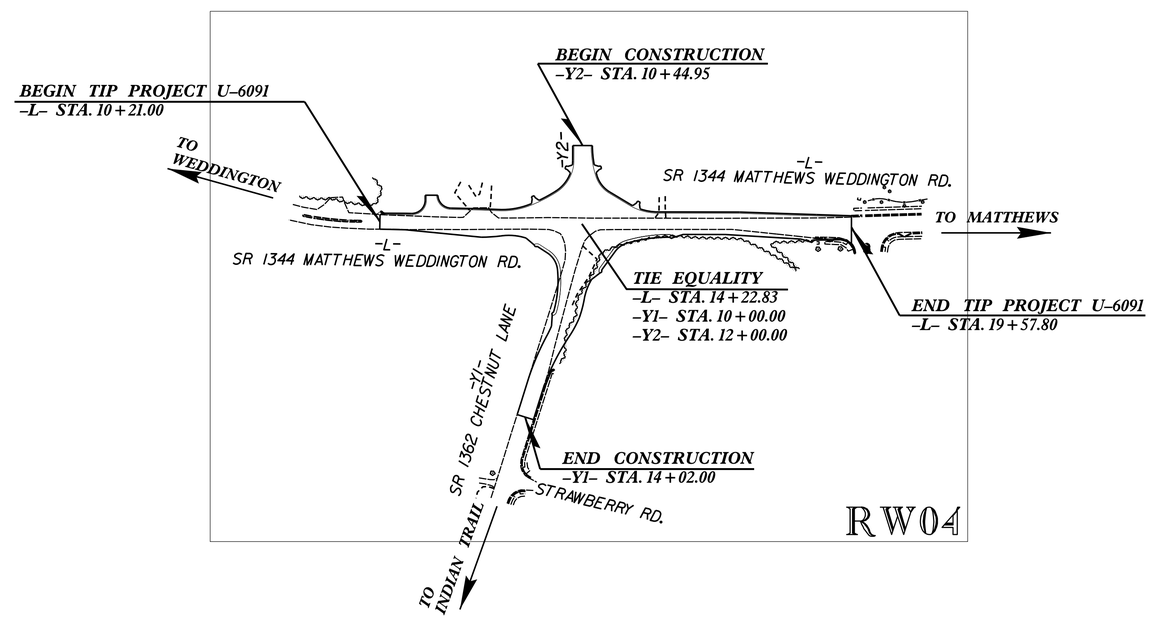

GRAPHIC SCALE

50 25 0 50 100
PLANS

DATUM DESCRIPTION

THE LOCALIZED COORDINATE SYSTEM DEVELOPED FOR THIS PROJECT
IS BASED ON THE STATE PLANE COORDINATES ESTABLISHED BY
OTHERS FOR MONUMENT "U6091-1"
WITH NAD 83/NA 2011 STATE PLANE GRID COORDINATES OF
NORTHING: 482,199.740(ft) EASTING: 1,483,214.286(ft)
ELEVATION: 737.114(ft)
THE AVERAGE COMBINED GRID FACTOR USED ON THIS PROJECT
(GROUND TO GRID) IS: 0.99985
THE N.C. LAMBERT GRID BEARING AND
LOCALIZED HORIZONTAL GROUND DISTANCE FROM
"U6091-1" TO -L- STATION 10+00.00 IS
S 12°42'00.5" W 360.30(ft)
ALL LINEAR DIMENSIONS ARE LOCALIZED HORIZONTAL DISTANCES
VERTICAL DATUM USED IS NAVD 88

Prepared in the Office of:

ESP Associates, Inc.
P.O. Box 7030
Charlotte, NC 28241
3475 Lakemont Blvd.
Fort Mill, SC 29708
704-583-4949 (NC)
803-802-2440 (SC)
www.espassociates.com

2018 STANDARD SPECIFICATIONS

RIGHT OF WAY DATE:	LETTING DATE:
07/01/2019	FY 2020

PROFESSIONAL LAND SURVEYOR

NORTH CAROLINA PROFESSIONAL SEAL L-4185 LAND SURVEYOR RANDY W. NANCE

DocuSigned by: Randy W Nance
E96E1A61233442D...

DocuSigned by: Randy W Nance
E96E1A61233442D...
SIGNATURE: Date: 11/11/2019

STATE OF NORTH CAROLINA DEPARTMENT OF TRANSPORTATION

$$$$SYSTIME$$$$ $$$$DGN$$$$ $$$$USERNAME$$$$

PROJECT REFERENCE NO.	SHEET NO.
U-6091	RW02C-1
Location and Surveys	

SURVEY CONTROL SHEET

W/ EXISTING CENTERLINE ALIGNMENTS PRIOR TO CONSTRUCTION

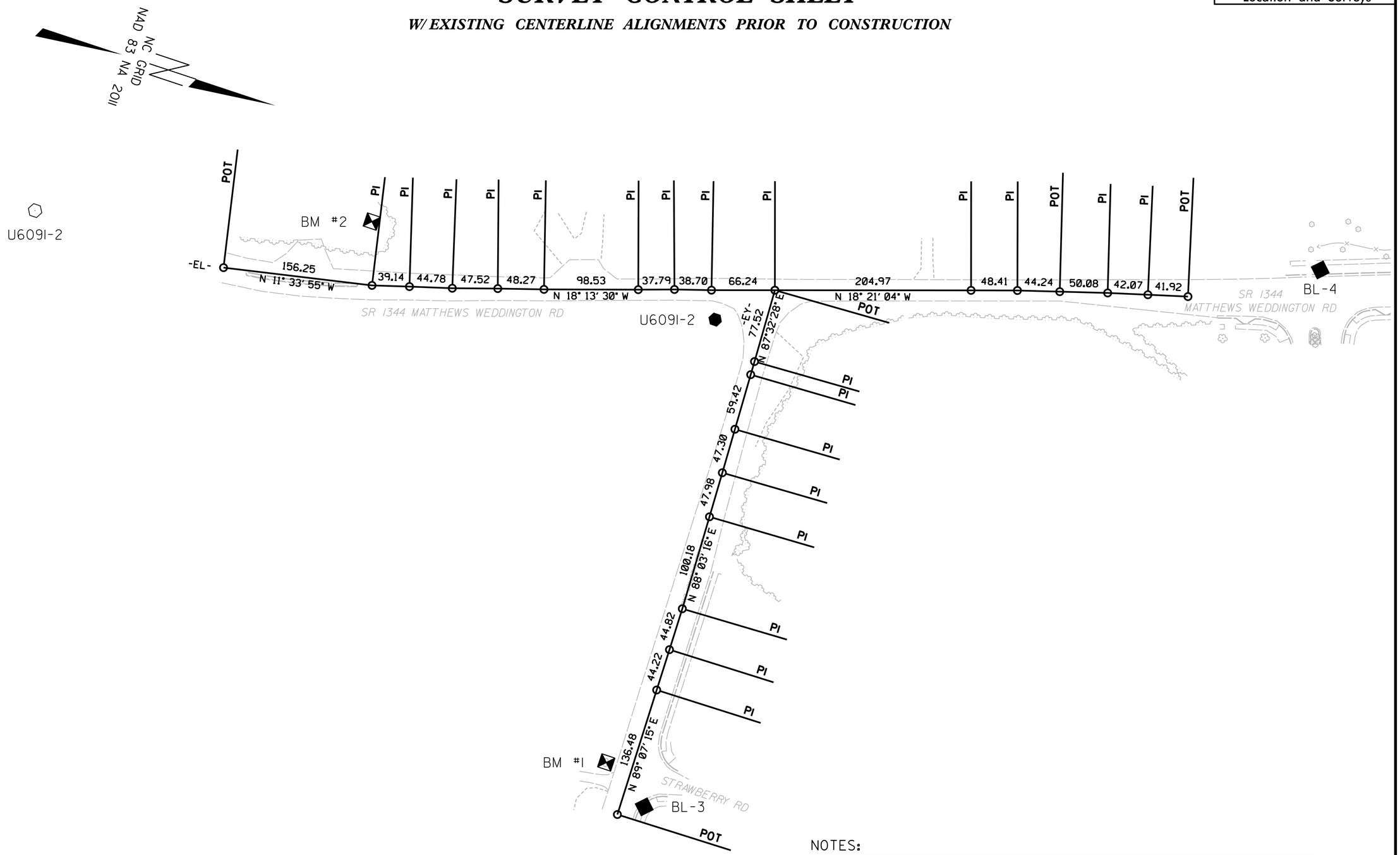

NOTES:

1. PROJECT CONTROL WAS ESTABLISHED USING GNSS, THE GLOBAL NAVIGATION SATELLITE SYSTEM.
2. THE SURVEY CONTROL DATA FOR THIS PROJECT HAS BEEN COMPILED FROM VARIOUS SOURCES. IF FURTHER INFORMATION REGARDING PROJECT CONTROL IS NEEDED, PLEASE CONTACT THE LOCATION AND SURVEYS UNIT.

6/2/99
09-APR-2019 10:21
C:\Projects\U6091\LS10:19-xxx_RW_sheets_C_D\u6091_ls-rw02c-1.dgn
dstaples AT LSDW10-299087

PROJECT REFERENCE NO.	SHEET NO.
U-6091	RW02C-2
Location and Surveys	
INSERT CONSULTANT'S NAME	

SURVEY CONTROL SHEET

W/ EXISTING CENTERLINE ALIGNMENTS PRIOR TO CONSTRUCTION

BL

POINT	DESC.	NORTH	EAST	ELEVATION
2	U6091-2	481489.5397	1483330.3703	738.94
1	U6091-1	482199.7402	1483214.2864	737.11
4	BL-4	482783.1711	1482965.4961	734.55

BY

POINT	DESC.	NORTH	EAST	ELEVATION
1	U6091-1	482199.7402	1483214.2864	737.11
3	BL-3	482290.0157	1483720.8368	742.42

****
BM •1 ELEVATION = 743.23
N 482238 E 1483689
R/R SPIKE IN BASE OF 24" OAK
****
BM •2 ELEVATION = 739.20
N 481827 E 1483230
R/R SPIKE IN BASE OF 36" OAK
****

EL

POINT	N	E	BEARING	DIST
POT	481695.180	1483324.822		
LINE			N 11°33'54.5" W	156.25
POT	481848.255	1483293.498		
LINE			N 16°35'08.1" W	39.14
POT	481885.764	1483282.326		
LINE			N 16°11'45.8" W	44.78
POT	481928.767	1483269.835		
LINE			N 17°57'24.9" W	47.52
POT	481973.976	1483255.184		
LINE			N 17°23'23.5" W	48.27
POT	482020.037	1483240.758		
LINE			N 18°13'30.1" W	98.53
POT	482113.624	1483209.943		
LINE			N 18°41'25.7" W	37.79
POT	482149.424	1483197.832		
LINE			N 17°19'03.7" W	38.70
POT	482186.374	1483186.311		
LINE			N 18°20'22.8" W	66.24
POT	482249.245	1483165.470		
LINE			N 18°21'03.9" W	204.97
POT	482443.791	1483100.938		
LINE			N 18°14'27.9" W	48.41
POT	482489.773	1483085.783		
LINE			N 16°50'04.2" W	44.24
POT	482532.114	1483072.972		
LINE			N 16°50'04.2" W	50.08
POT	482580.051	1483058.467		
LINE			N 15°51'33.3" W	42.07
POT	482620.515	1483046.971		
LINE			N 15°44'12.6" W	41.92
POT	482660.866	1483035.602		

EY

POINT	N	E	BEARING	DIST
POT	482249.245	1483165.470		
LINE			N 87°32'27.9" E	77.52
POT	482252.570	1483242.921		
LINE			N 87°47'53.2" E	14.25
POT	482253.118	1483257.160		
LINE			N 87°43'34.0" E	59.42
POT	482255.476	1483316.531		
LINE			N 87°44'11.2" E	47.30
POT	482257.344	1483363.789		
LINE			N 87°52'56.6" E	47.98
POT	482259.117	1483411.739		
LINE			N 88°03'16.2" E	100.18
POT	482262.518	1483511.862		
LINE			N 89°02'12.5" E	44.82
POT	482263.271	1483556.680		
LINE			N 89°12'11.1" E	44.22
POT	482263.886	1483600.893		
LINE			N 89°07'15.1" E	136.48
POT	482265.980	1483737.353		

NOTES:

1. PROJECT CONTROL WAS ESTABLISHED USING GNSS, THE GLOBAL NAVIGATION SATELLITE SYSTEM.

2. THE SURVEY CONTROL DATA FOR THIS PROJECT HAS BEEN COMPILED FROM VARIOUS SOURCES. IF FURTHER INFORMATION REGARDING PROJECT CONTROL IS NEEDED, PLEASE CONTACT THE LOCATION AND SURVEYS UNIT.

REVISIONS

6/2/99

09-APR-2019 10:39
C:\Projects\u6091\LS10-19-xxx_RW_sheets_C_D\u6091_ls_rw02c2_.dgn
dstaples AT LSDID-299087

PROJECT REFERENCE NO.	SHEET NO.
U-6091	RW02D-1
Location and Surveys	

PROPOSED ALIGNMENT CONTROL SHEET

L

TYPE	STATION	NORTH	EAST
POT	10+00.00	481848.2550	1483293.4975
PC	12+14.42	482053.0164	1483229.8544
PRC	12+79.18	482112.3410	1483204.1961
PRC	14+22.83	482249.2446	1483165.4701
PRC	15+41.43	482363.4283	1483136.3813
PT	15+80.44	482399.5919	1483121.8220
POT	20+45.66	482841.4337	1482976.2006

RDBT

TYPE	STATION	NORTH	EAST
PC	10+00.00	482205.5810	1483179.9440
PT	12+89.03	482205.5809	1483179.9437

Y1

TYPE	STATION	NORTH	EAST
PC	10+00.00	482249.2446	1483165.4701
PRC	11+19.36	482268.2439	1483283.0180
PRC	12+15.88	482271.9024	1483378.5420
PT	13+25.97	482261.7050	1483487.9344
POT	15+75.43	482265.9800	1483737.3535

NOTES:

1. PROJECT CONTROL WAS ESTABLISHED USING GNSS, THE GLOBAL NAVIGATION SATELLITE SYSTEM.

2. THE PROPOSED ALIGNMENT CONTROL DATA FOR THIS PROJECT HAS BEEN COMPILED FROM VARIOUS SOURCES. IF FURTHER INFORMATINO REGARDING PROJECT CONTROL IS NEEDED, PLEASE CONTACT THE LOCATION AND SURVEYS UNIT.

REVISIONS

6/2/99

09-APR-2019 10:51
c:\projects\u6091\LS10-19-xxx_RW_sheets_C_D\u6091_ls_rw02d-1.dgn
dsteele AT PSH02-29087

DocuSign Envelope ID: C5AC3E2C-68A1-4D12-8689-B588EA2E62B3

6/2/99

REVISIONS

RIGHT OF WAY & PERMANENT EASEMENT CONTROL SHEET

PROJECT REFERENCE NO.	SHEET NO.
U-6091	RW03E-1

Location and Surveys

ESP Associates, Inc.
P.O. Box 7030
Charlotte, NC 28241
3475 Lakemont Blvd.
Fort Mill, SC 29708
704-583-8949 (NC)
803-802-2440 (SC)
www.espassociates.com

PROJECT SURVEYOR

NORTH CAROLINA PROFESSIONAL SEAL L-4185 LAND SURVEYOR RANDY W. NANCE

DocuSigned by: Randy W Nance E96E1A612134420... 11/11/2019

DOCUMENT NOT CONSIDERED FINAL UNLESS ALL SIGNATURES COMPLETED

ROW MARKER IRON PIN AND CAP

ALIGN	STATION	OFFSET	NORTH	EAST
L	10+97.00	-34.00	481930.7923	1483232.2391
L	10+97.00	-27.40	481932.7520	1483238.5441
L	11+80.00	29.12	482028.7860	1483267.8774
L	12+91.00	-27.00	482110.3724	1483174.5765
L	13+15.00	52.00	482164.5320	1483236.4351
L	15+14.00	42.00	482352.8152	1483186.4651
L	15+26.00	-53.00	482328.9229	1483093.7866
L	15+76.00	-34.41	482384.1381	1483090.7248
L	16+90.00	23.03	482510.8567	1483109.4035

ROW MARKER IRON PIN AND CAP

ALIGN	STATION	OFFSET	NORTH	EAST
Y1	10+97.00	40.00	482223.6560	1483270.7079
Y1	11+29.00	-44.00	482313.5082	1483282.2571
Y1	11+81.00	-42.00	482317.9117	1483345.1365
Y1	13+70.00	-30.39	482292.8493	1483531.4329

ROW MARKER IRON PIN AND CAP

ALIGN	STATION	OFFSET	NORTH	EAST
Y2	10+44.95	-25.00	482225.5022	1483010.0777
Y2	10+44.95	25.00	482178.0060	1483025.7019
Y2	10+75.00	25.00	482187.3966	1483054.2482
Y2	11+03.00	-33.00	482251.2417	1483062.7219
Y2	11+07.00	33.05	482189.7495	1483087.1611

ROW MARKER PERMANENT EASEMENT

ALIGN	STATION	OFFSET	NORTH	EAST
L	9+67.00	-29.39	481810.0327	1483271.3192
L	10+37.00	-74.00	481861.6238	1483211.8502
L	10+43.00	-83.00	481864.6821	1483201.4749
L	10+50.00	-66.00	481876.4124	1483215.6312
L	10+61.00	-71.00	481885.4327	1483207.5916
L	10+80.00	-79.00	481901.2020	1483194.3127
L	11+46.00	-37.00	481976.6938	1483214.8307
L	11+46.02	-34.46	481977.4709	1483217.2508
L	12+34.00	-48.00	482054.3331	1483178.6229
L	12+34.00	-37.00	482058.2694	1483188.8945
L	12+58.00	-48.00	482072.8879	1483170.6562
L	12+58.00	-32.67	482079.4896	1483184.4933
L	15+83.00	-52.00	482385.7471	1483071.6336
L	18+00.00	-37.00	482596.5376	1483017.9553
L	18+46.00	28.38	482660.6909	1483065.6508
L	18+46.00	52.00	482668.0844	1483088.0841
L	19+04.00	30.92	482716.5703	1483049.9051
L	19+04.00	52.00	482723.1698	1483069.9292
L	19+41.00	-119.00	482704.7847	1482895.9407
L	19+55.93	-26.08	482748.0525	1482979.5160
L	19+59.17	-38.09	482747.3687	1482967.0959
L	19+60.00	-126.00	482720.6388	1482883.3452
L	19+64.00	-56.00	482746.3490	1482948.5754
L	19+76.84	-26.78	482767.6888	1482972.3102
L	19+85.00	-57.00	482765.9806	1482941.0524

I, Randy W. Nance, a Professional Land Surveyor in the state of North Carolina hereby certify to the best of my knowledge and belief that the following work item(s) (Base map Compilation, R/W Staking) performed under my responsible charge meet NCDOT Survey Standards as directed in the NCDOT Location & Surveys guidelines and procedures.

I further certify that the data compiled came from available surveys/mapping performed by others and provided to me by NCDOT and do not certify to the accuracy or quality of the individual data sources.

I further certify that the right of way and permanent easement points shown herein and outlined in the tables shown hereon (localized coordinates, station/offset) have been checked and are accurate representations of the right of way and permanent easement points depicted on the corresponding highway plans. I also certify that the right of way and permanent easement points shown herein have been field monumented under my supervision from existing survey control provided by others; that the depicted property data shown herein were surveyed by others; and these monuments denote the right of way and easement boundaries at the time of staking which may be subject to change due to right of way revisions (See deeds for final determination).

Witness my original signature, registration number and seal this 11th day of November, 2019.

DocuSigned by: Randy W Nance E96E1A612134420... 11/11/2019
Professional Land Surveyor

L-4185
PLS #

NORTH CAROLINA PROFESSIONAL SEAL L-4185 LAND SURVEYOR RANDY W. NANCE
Seal

ROW MARKER PERMANENT EASEMENT

ALIGN	STATION	OFFSET	NORTH	EAST
Y1	11+26.00	87.00	482185.5983	1483310.6519
Y1	12+77.00	33.42	482229.9510	1483436.3072
Y1	13+84.00	-30.39	482293.0819	1483545.4314
Y1	13+87.00	-69.00	482331.7407	1483547.7692
Y1	13+94.00	-30.38	482293.2500	1483555.4300
Y1	13+97.00	-68.00	482330.9122	1483557.7849

NOTES:

1. IF FURTHER INFORMATION REGARDING PROJECT CONTROL IS NEEDED, PLEASE CONTACT THE LOCATION AND SURVEYS UNIT.

2. PROJECT CONTROL WAS ESTABLISHED USING GNSS, THE GLOBAL NAVIGATION SATELLITE SYSTEM.

11-NOV-2019 08:02
U:\Projects\U6091_Cabarrus_esp\Working\Microstation\6_u6091\u6091_ls_rw03e-1.dgn
esp_rw_c_ESP25D040614

DocuSign Envelope ID: C5AC3E2C-68A1-4D12-8689-B588EA2E62B3

PROJECT REFERENCE NO.	SHEET NO.
U-6091	RW04

Location and Surveys

ESP Associates, Inc.
P.O. Box 7030
Charlotte, NC 28241
3475 Lakemont Blvd.
Fort Mill, SC 29708
704-583-4949 (NC)
803-802-2440 (SC)
www.espassociates.com

PROJECT SURVEYOR

NORTH CAROLINA PROFESSIONAL SEAL L-4185 LAND SURVEYOR RANDY W. NANCE

DocuSigned by: Randy W Nance 11/11/2019

DOCUMENT NOT CONSIDERED FINAL UNLESS ALL SIGNATURES COMPLETED

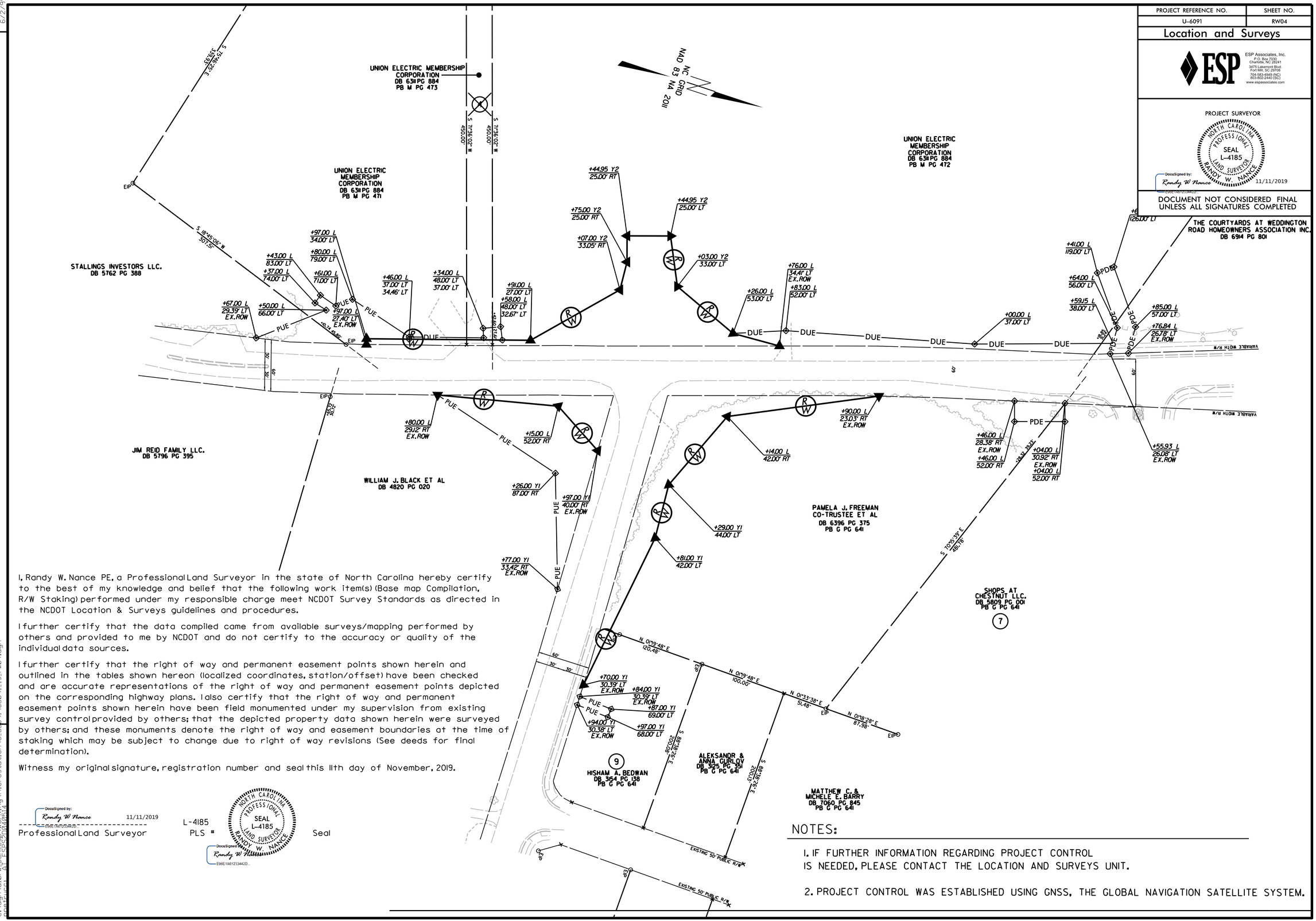

I, Randy W. Nance PE, a Professional Land Surveyor in the state of North Carolina hereby certify to the best of my knowledge and belief that the following work item(s) (Base map Compilation, R/W Staking) performed under my responsible charge meet NCDOT Survey Standards as directed in the NCDOT Location & Surveys guidelines and procedures.

I further certify that the data compiled came from available surveys/mapping performed by others and provided to me by NCDOT and do not certify to the accuracy or quality of the individual data sources.

I further certify that the right of way and permanent easement points shown herein and outlined in the tables shown hereon (localized coordinates, station/offset) have been checked and are accurate representations of the right of way and permanent easement points depicted on the corresponding highway plans. I also certify that the right of way and permanent easement points shown herein have been field monumented under my supervision from existing survey control provided by others; that the depicted property data shown herein were surveyed by others; and these monuments denote the right of way and easement boundaries at the time of staking which may be subject to change due to right of way revisions (See deeds for final determination).

Witness my original signature, registration number and seal this 11th day of November, 2019.

DocuSigned by: Randy W Nance 11/11/2019

Professional Land Surveyor — L-4185 PLS # — Seal

NORTH CAROLINA PROFESSIONAL SEAL L-4185 LAND SURVEYOR RANDY W. NANCE

DocuSigned by: Randy W Nance E96E1A61233442D...

NOTES:

1. IF FURTHER INFORMATION REGARDING PROJECT CONTROL IS NEEDED, PLEASE CONTACT THE LOCATION AND SURVEYS UNIT.

2. PROJECT CONTROL WAS ESTABLISHED USING GNSS, THE GLOBAL NAVIGATION SATELLITE SYSTEM.

REVISIONS

6/2/99

11-NOV-2019 08:02
U:\Projects\U6091_ncdot_esp\Working\Microstation\6_u6091\u6091_ls_rw04.dgn
pw:\\esp-pw.bentley.com:pw01\Projects\Active\ESP20040614

DocuSign Envelope ID: EE50E28C-D58A-4494-AF21-40C72A8A7CDE

REVISIONS

5/14/99

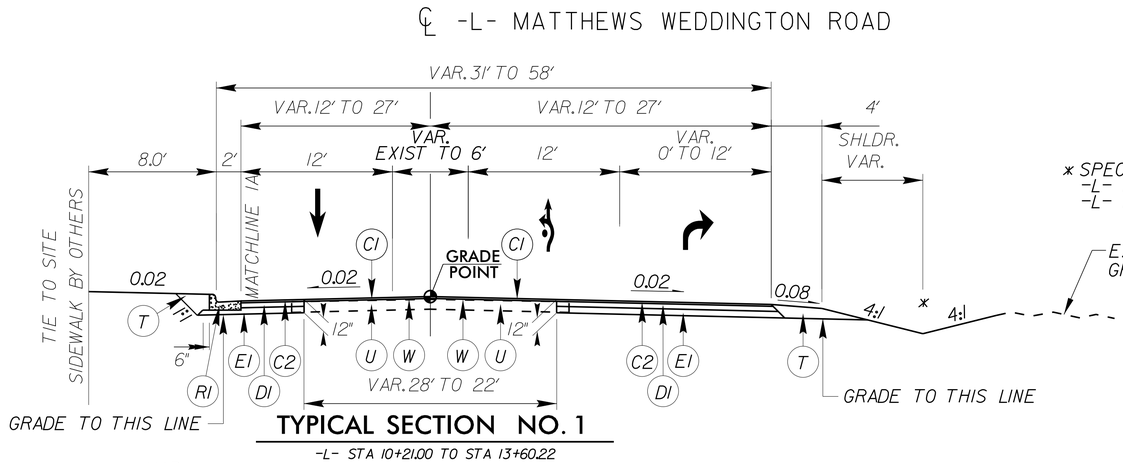

TYPICAL SECTION NO. 1

-L- STA 10+21.00 TO STA 13+60.22

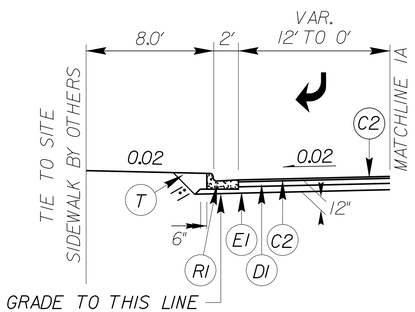

TYPICAL SECTION NO. 1A

-L- STA 11+45.77 TO STA 13+00.00

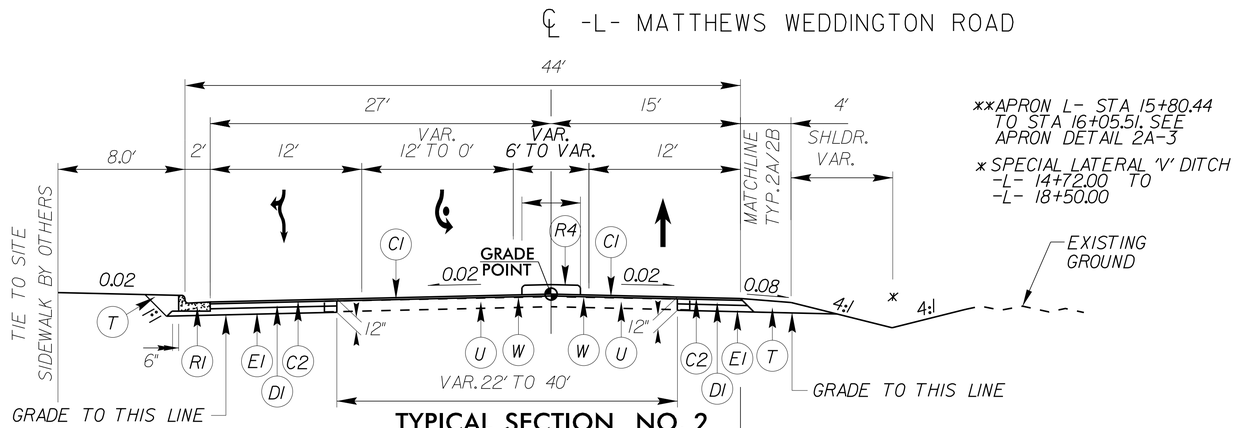

TYPICAL SECTION NO. 2

-L- STA 15+80.44 TO STA 19+57.80

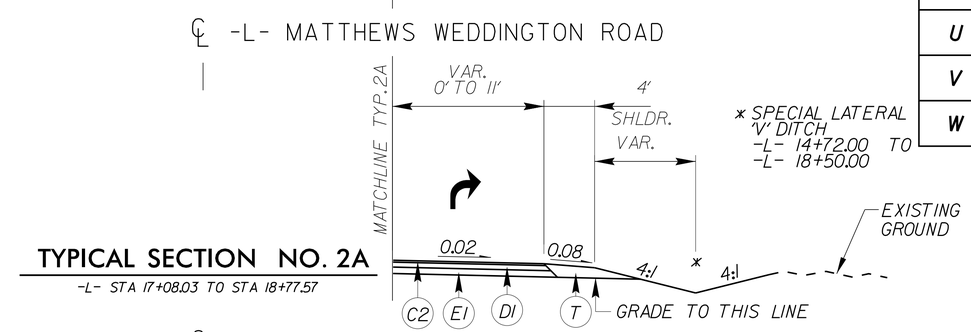

TYPICAL SECTION NO. 2A

-L- STA 17+08.03 TO STA 18+77.57

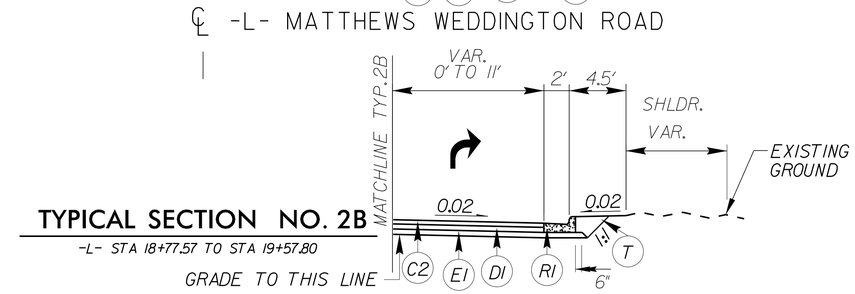

TYPICAL SECTION NO. 2B

-L- STA 18+77.57 TO STA 19+57.80

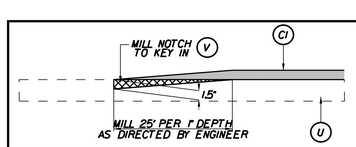

MILLING DETAIL

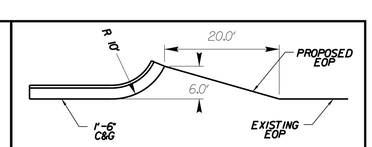

CURB RETURN DETAIL

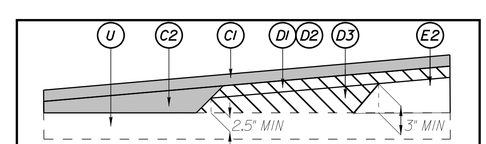

WEDGING DETAIL FOR RESURFACING

3/21/2017

Kimley»Horn ©2020

200 SOUTH TRYON, SUITE 200
CHARLOTTE, N.C. 28202

RIGHT-OF-WAY REV.

CONST. REV.

PROJECT REFERENCE NO.	SHEET NO.
U-6091	2A-1

ROADWAY DESIGN ENGINEER

NORTH CAROLINA PROFESSIONAL SEAL 037923 ENGINEER FRANK D. MASTERSON, JR. 03/25/2020

PAVEMENT DESIGN ENGINEER

NORTH CAROLINA PROFESSIONAL SEAL 034357 ENGINEER SEAN MICHAEL EMERSON 03/25/2020

DOCUMENT NOT CONSIDERED FINAL UNLESS ALL SIGNATURES COMPLETED

PAVEMENT SCHEDULE

A1	PROPOSED 8" TRUCK MOUNTABLE CONCRETE APRON, CLASS AA
A2	PROPOSED 7" TRUCK MOUNTABLE CONCRETE APRON WITH BLACK TINT, CLASS AA
C1	PROPOSED APPROX 1.5" ASPHALT CONCRETE SURFACE COURSE TYPE S9.5B, AT AN AVERAGE RATE OF 168 LBS. PER SQ. YD.
C2	PROPOSED APPROX 3" ASPHALT CONCRETE SURFACE COURSE TYPE S9.5B, AT AN AVERAGE RATE OF 168 LBS. PER SQ. YD. IN EACH OF TWO LAYERS.
C3	PROPOSED VAR. DEPTH ASPHALT CONCRETE SURFACE COURSE, TYPE S9.5B, AT AN AVERAGE RATE OF 112 LBS. PER SQ. YD. PER 1" DEPTH. TO BE PLACED IN LAYERS NOT TO EXCEED 2" IN DEPTH.
D1	PROPOSED APPROX. 4" ASPHALT CONCRETE INTERMEDIATE COURSE TYPE I19.0C, AT AN AVERAGE RATE OF 456 LBS. PER SQ. YD.
D2	PROPOSED VAR. DEPTH ASPHALT CONCRETE INTERMEDIATE COURSE, TYPE I19.0C, AT AN AVERAGE RATE OF 114 LBS. PER SQ. YD. PER 1" DEPTH TO BE PLACED IN LAYERS NOT LESS THAN 2.5" OR GREATER THAN 4" IN DEPTH.
E1	PROPOSED APPROX. 5" ASPHALT CONCRETE BASE COURSE TYPE B25.0C, AT AN AVERAGE RATE OF 570 LBS. PER SQ. YD.
E2	PROPOSED VAR. DEPTH ASPHALT CONCRETE BASE COURSE, TYPE B25.0C, AT AN AVERAGE RATE OF 114 LBS. PER SQ. YD. PER 1" DEPTH TO BE PLACED IN LAYERS NOT LESS THAN 3" OR GREATER THAN 5.5" IN DEPTH.
J	PROPOSED 6" ABC STONE
R1	2'-6" CONCRETE CURB & GUTTER
R2	1'-6" CONCRETE CURB & GUTTER, CLASS AA
R3	1'-6" CONCRETE CURB & GUTTER WITH BLACK TINT, CLASS AA
R4	5" MONOLITHIC CONCRETE ISLAND (KEYED-IN)
T	EARTH MATERIAL
U	EXISTING PAVEMENT
V	1.5" MILLING EXISTING PAVEMENT
W	WEDGING

PAVEMENT EDGE SLOPES ARE 1:1 UNLESS OTHERWISE INDICATED

DocuSign Envelope ID: EE50E28C-D58A-4494-AF21-40C72A8A7CDE

5/14/99

REVISIONS

Kimley»Horn ©2020

200 SOUTH TRYON, SUITE 200
CHARLOTTE, N.C. 28202

RIGHT-OF-WAY REV.

CONST. REV.

PROJECT REFERENCE NO.	SHEET NO.
U-6091	2A-2

ROADWAY DESIGN ENGINEER

NORTH CAROLINA PROFESSIONAL SEAL 037926 ENGINEER FRANK D. MASTERSON, JR.
DocuSigned by: 6/25/2020

PAVEMENT DESIGN ENGINEER

NORTH CAROLINA PROFESSIONAL SEAL 034357 ENGINEER SEAN MICHAEL EPPERSON
DocuSigned by: 6/25/2020

DOCUMENT NOT CONSIDERED FINAL UNLESS ALL SIGNATURES COMPLETED

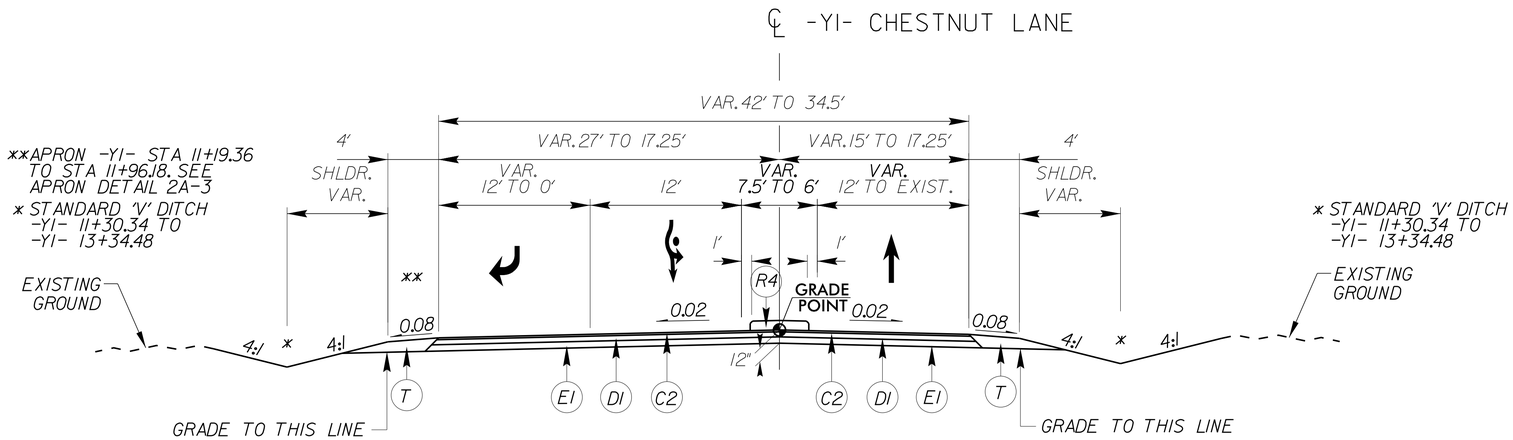

TYPICAL SECTION NO. 3

-Y1- STA 11+19.36 TO STA 13+34.48

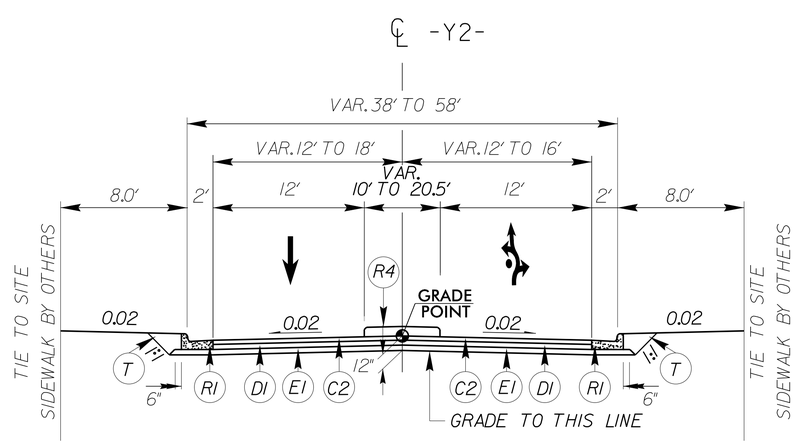

TYPICAL SECTION NO. 4

-Y2- STA 10+00.00 TO STA 10+44.95

PAVEMENT SCHEDULE

A1	8" CONCRETE TRUCK APRON.CLASS AA
A2	7" CONCRETE TRUCK APRON W/ BLACK TINT.CLASS AA
C1	1.5" S9.5B
C2	3.0" S9.5B
C3	VAR.DEPTH S9.5B
D1	4" 119.0C
D2	VAR.DEPTH 119.0C
E1	5.0" B25.0C
E2	VAR.DEPTH B25.0C
J	6" ABC STONE
R1	2'-6" CONCRETE CURB & GUTTER
R2	1'-6" CONCRETE CURB & GUTTER.CLASS AA
R3	5" MONOLITHIC CONCRETE ISLAND (SURFACE MOUNTED)
R4	1'-6" CONCRETE CURB & GUTTER W/ BLACK TINT.CLASS AA
T	EARTH MATERIAL
U	EXISTING PAVEMENT
V	1.5" MILLING EXISTING PAVEMENT
W	WEDGING

PAVEMENT EDGE SLOPES ARE 1:1 UNLESS OTHERWISE INDICATED

3/21/2017

DocuSign Envelope ID: EE50E28C-D58A-4494-AF21-40C72A8A7CDE

5/14/99

REVISIONS

PAVEMENT EDGE SLOPES ARE 1:1 UNLESS OTHERWISE INDICATED
UTILIZE 15' RADIAL JOINT SPACING FOR THE ROUNDABOUT TRUCK APRON
UTILIZE WELDED WIRE MESH (EITHER 4X4 W3.5XW3.5 OR 6X6 W5XW5)

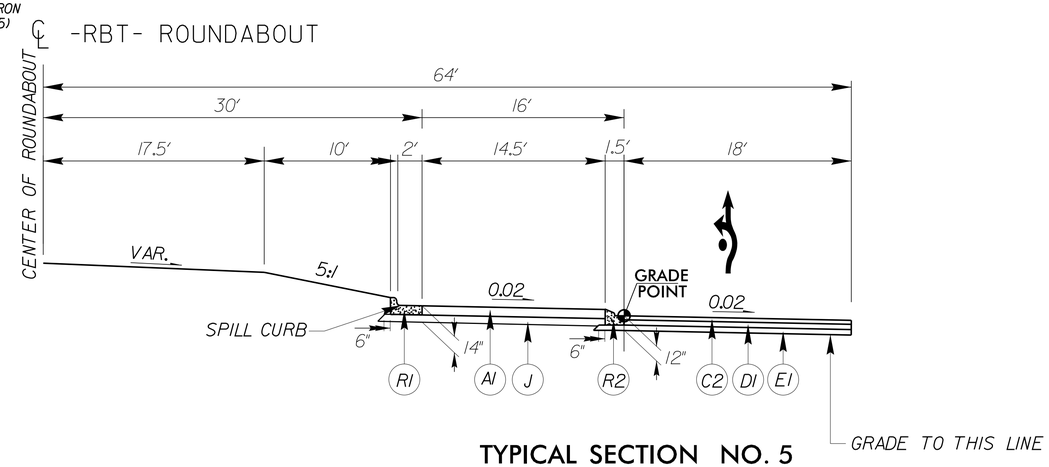

TYPICAL SECTION NO. 5

-RBT- STA 10+00.00 TO STA 11+86.54
-RBT- STA 12+43.95 TO STA.12+89.02

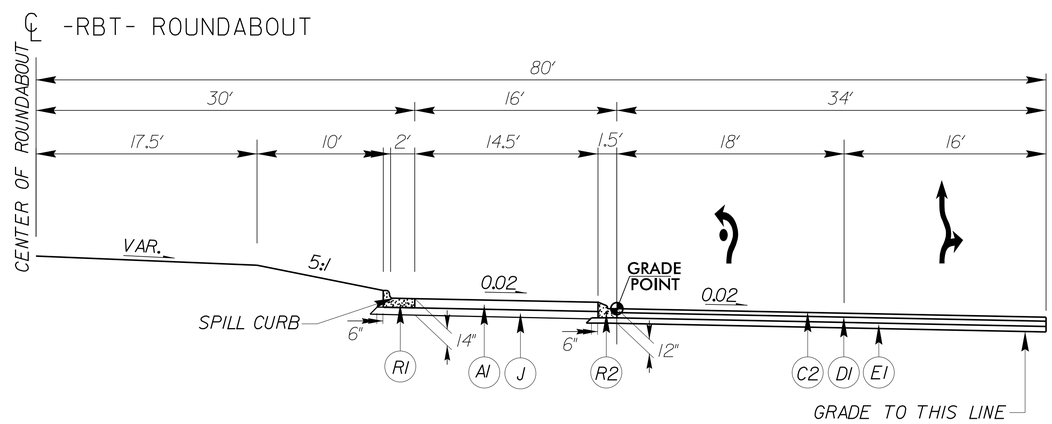

TYPICAL SECTION NO. 6

-RBT- STA 11+86.55 TO STA 12+43.94

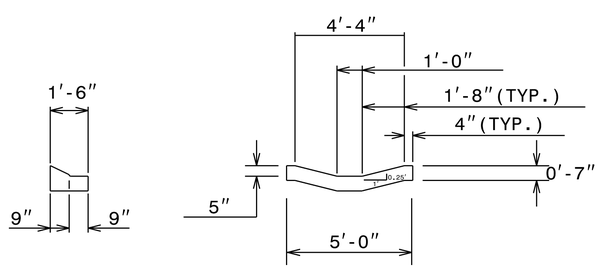

FLUME DETAIL

12" MODIFIED CONCRETE FLUME IN
TRUCK MOUNTABLE APRON
AS DIRECTED BY ENGINEER

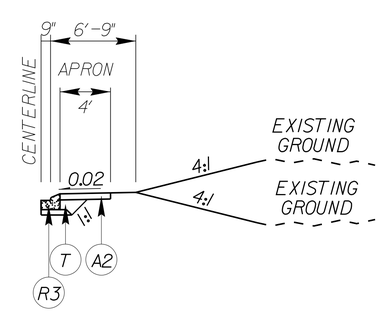

TYPICAL SECTION NO. 7
APRON DETAIL

-CURBIB- STA 10+70.94 TO STA 12+42.41
-CURBIC- STA 10+60.61 TO STA 12+31.91

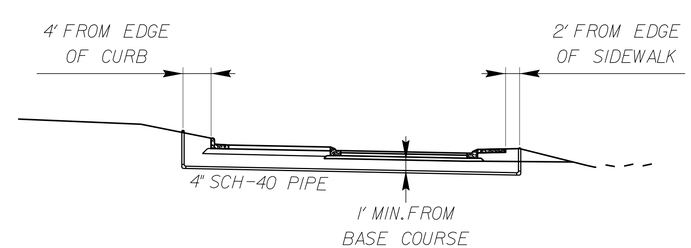

PVC PIPE DETAIL

3/21/2017

Kimley»Horn ©2020
200 SOUTH TRYON, SUITE 200
CHARLOTTE, N.C. 28202

RIGHT-OF-WAY REV.
CONST. REV.

PROJECT REFERENCE NO.	SHEET NO.
U-6091	2A-3

ROADWAY DESIGN ENGINEER
NORTH CAROLINA PROFESSIONAL SEAL 037925 ENGINEER FRANK D. MASTERSON III
3/25/2020

PAVEMENT DESIGN ENGINEER
NORTH CAROLINA PROFESSIONAL SEAL 034357 ENGINEER SEAN MICHAEL BRICKHOUSE
3/25/2020

DOCUMENT NOT CONSIDERED FINAL UNLESS ALL SIGNATURES COMPLETED

PAVEMENT SCHEDULE

A1	8" CONCRETE TRUCK APRON.CLASS AA
A2	7" CONCRETE TRUCK APRON W/ BLACK TINT.CLASS AA
C1	1.5" S9.5B
C2	3.0" S9.5B
C3	VAR.DEPTH S9.5B
D1	4" 119.0C
D2	VAR.DEPTH 119.0C
E1	5.0" B25.0C
E2	VAR.DEPTH B25.0C
J	6" ABC STONE
R1	2'-6" CONCRETE CURB & GUTTER
R2	1'-6" CONCRETE CURB & GUTTER.CLASS AA
R3	5" MONOLITHIC CONCRETE ISLAND (SURFACE MOUNTED)
R4	1'-6" CONCRETE CURB & GUTTER W/ BLACK TINT.CLASS AA
T	EARTH MATERIAL
U	EXISTING PAVEMENT
V	1.5" MILLING EXISTING PAVEMENT
W	WEDGING

PAVEMENT EDGE SLOPES ARE 1:1 UNLESS OTHERWISE INDICATED

DocuSign Envelope ID: DACA551D-EFD3-4964-B169-BD4A21FC842B

PAVEMENT REMOVAL DETAIL SHEET

Kimley»Horn ©2020
200 SOUTH TRYON, SUITE 200
CHARLOTTE, N.C. 28202

PROJECT REFERENCE NO.	SHEET NO.
U-6091	2B-1
R/W SHEET NO.	

ROADWAY DESIGN ENGINEER	HYDRAULICS ENGINEER
NORTH CAROLINA PROFESSIONAL SEAL 037923 ENGINEER FRANK D. MASTERSON, JR.	NORTH CAROLINA PROFESSIONAL SEAL 032015 ENGINEER JASON D. TANNER
DocuSigned by: 5/14/2020	DocuSigned by: 5/14/2020

DOCUMENT NOT CONSIDERED FINAL UNLESS ALL SIGNATURES COMPLETED

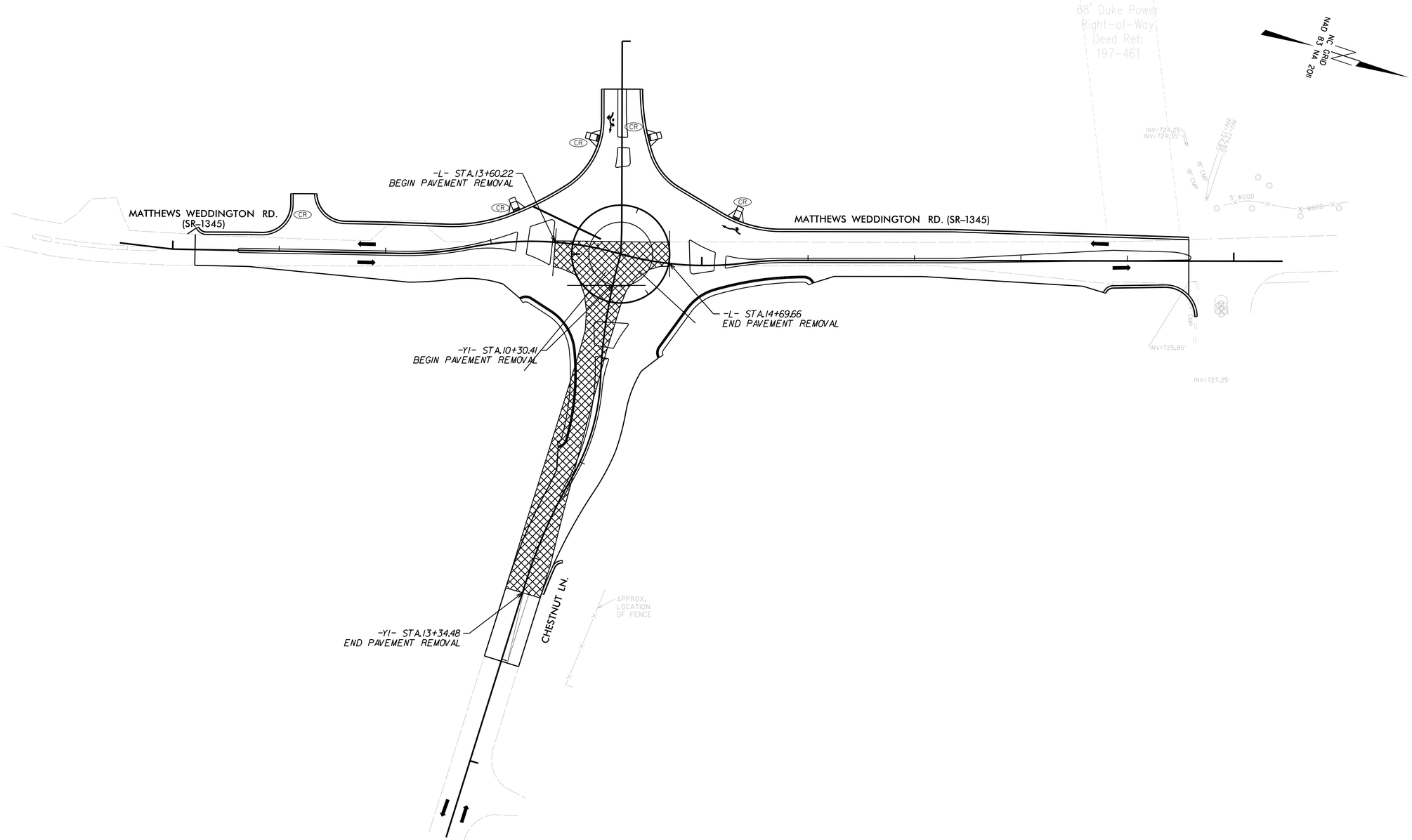

REVISIONS

5/14/99

6/01/2017

DocuSign Envelope ID: DACA551D-EFD3-4964-B169-BD4A21FC842B

ROUNDABOUT GEOMETRY SHEET

Kimley»Horn ©2020
200 SOUTH TRYON, SUITE 200
CHARLOTTE, N.C. 28202

PROJECT REFERENCE NO.	SHEET NO.
U-6091	2B-2
R/W SHEET NO.	
ROADWAY DESIGN ENGINEER	HYDRAULICS ENGINEER

NORTH CAROLINA PROFESSIONAL SEAL 037926 FRANK D. MASTERSON, JR. — 7/13/2020

NORTH CAROLINA PROFESSIONAL SEAL 032618 JASON D. TOMPKINS — 7/13/2020

DOCUMENT NOT CONSIDERED FINAL UNLESS ALL SIGNATURES COMPLETED

REVISIONS

5/14/99

6/01/2017

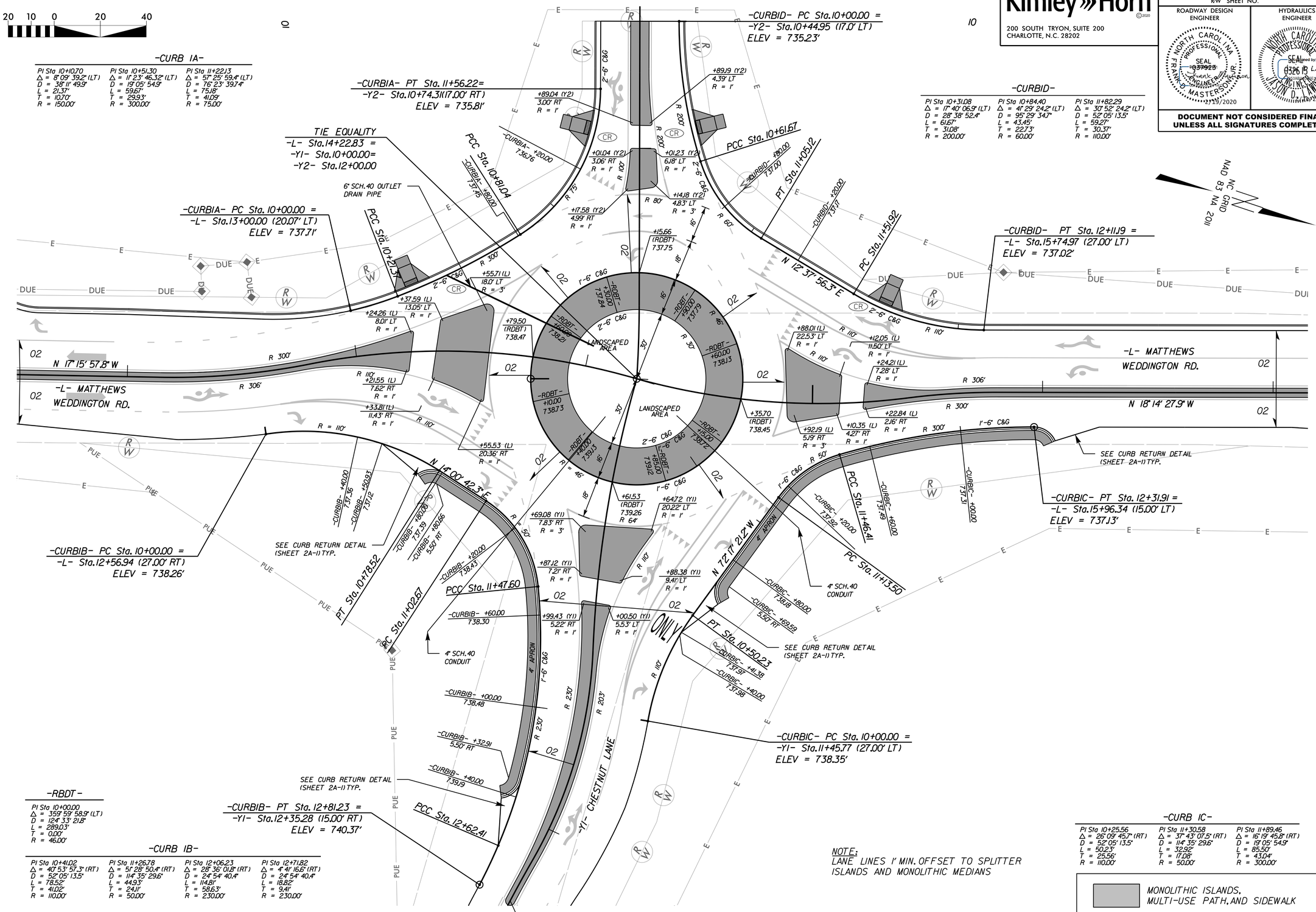

DocuSign Envelope ID: DACA551D-EFD3-4964-B169-BD4A21FC842B

5/14/99

Kimley»Horn ©2020
200 SOUTH TRYON, SUITE 200
CHARLOTTE, N.C. 28202

PROJECT REFERENCE NO.	SHEET NO.
U-6091	2B-3

ROADWAY DESIGN ENGINEER: NORTH CAROLINA PROFESSIONAL SEAL 037923 ENGINEER FRANK O. MASTERSON, III — Signed by: 03/17/2020

HYDRAULICS ENGINEER: NORTH CAROLINA PROFESSIONAL SEAL 036713 ENGINEER JASON D. ANDERS — Signed by: 03/17/2020

DOCUMENT NOT CONSIDERED FINAL UNLESS ALL SIGNATURES COMPLETED

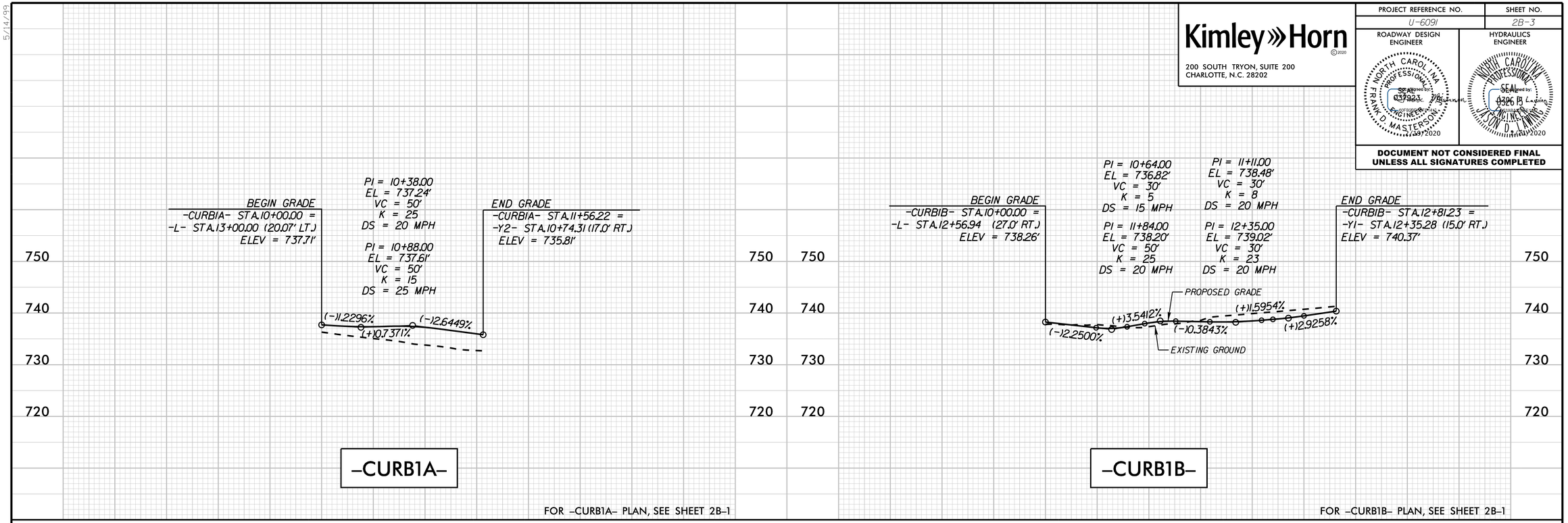

2/02/2017

Kimley»Horn ©2020
200 SOUTH TRYON, SUITE 200
CHARLOTTE, N.C. 28202

RIGHT-OF-WAY REV.

CONST. REV.

PROJECT REFERENCE NO.	SHEET NO.
U-6091	3B-1

SEAL

NORTH CAROLINA PROFESSIONAL SEAL 037923 ENGINEER DAVID R. MASTERSON, JR.

2/25/2020

DOCUMENT NOT CONSIDERED FINAL UNLESS ALL SIGNATURES COMPLETED

REVISIONS

5/14/99

PAVEMENT REMOVAL SUMMARY

SURVEY LINE	STATION	STATION	LOCATION LT/RT/CL	YD^2
L	13+60.22	14+69.66	CL	409
Y1	10+30.41	13+34.48	CL	977
PROJECT TOTAL:				1385
SAY:				1400

SUMMARY OF EARTHWORK
IN CUBIC YARDS

LOCATION	UNCLASSIFIED EXCAVATION	UNDERCUT	EMBT 15%	BORROW	WASTE
–L– STA 10+21.11 TO STA 19+57.80	273		1019	746	0
–Y1– STA 11+50.00 TO STA 13+44.00	931		0	0	931
–Y2– STA 10+50.00 TO STA 11+00.00	0		413	413	0
–RDBT– STA 10+00.00 TO STA 12+89.03	25		1842	1817	0
–CURB1A– STA 10+00.00 TO STA 11+48.54	1		836	835	0
–CURB1B– STA 10+00.00 TO STA 12+81.22	616		16	0	600
–CURB1C– STA 10+00.00 TO STA 12+31.91	643		25	0	618
–CURB1D– STA 10+00.00 TO STA 12+07.45	11		1109	1098	0
SUBTOTALS	2500		5260	4909	2149
UNCLASSIFIED EXCAVATION				–2149	
REPLACEMENT OF PAVEMENT REMOVAL				1400	
PROJECT TOTALS	2500		5260	4160	
5% FOR REPLACING TOPSOIL				208	
GRAND TOTALS	2500			4368	
SAY	2800			5200	

NOTE: APPROXIMATE QUANTITIES ONLY. UNCLASSIFIED EXCAVATION, FINE GRADING, CLEARING AND GRUBBING, REMOVAL OF EXISTING PAVEMENT, AND BREAKING OF EXISTING PAVEMENT WILL BE PAID FOR AT THE CONTRACT LUMP SUM PRICE FOR "GRADING."

3/21/2017

Kimley»Horn ©2020

200 SOUTH TRYON, SUITE 200
CHARLOTTE, N.C. 28202

RIGHT-OF-WAY REV.

CONST. REV.

PROJECT REFERENCE NO.	SHEET NO.
U-6091	3B-2

SEAL

NORTH CAROLINA PROFESSIONAL SEAL 037923 ENGINEER JOHN MASTERSON, JR.

DocuSigned by: 6DF1E0A... 2/25/2020

DOCUMENT NOT CONSIDERED FINAL UNLESS ALL SIGNATURES COMPLETED

RIGHT OF WAY DATA SHEET

PARCEL NO.	PROPERTY OWNERS NAMES	TOTAL AREA (AC)	AREA TAKEN (AC)	AREA REMAINING RT. (AC)	AREA REMAINING LT. (AC)	CONSTR. EASEMENT (AC)	PERM. DRAINAGE EASEMENT (AC)	ROW (AC)	PERM. UTILITY EASEMENT (AC)	PERM. DRAINAGE UTILITY EASEMENT (AC)
1	STALLINGS INVESTORS LLC.	2.841	0.036	-	2.805	0.000	0.000	0.000	0.036	0.000
2	WILLIAM J. BLACK ET AL	5.935	0.356	5.579	-	0.042	0.000	0.073	0.241	0.000
3	UNION ELECTRIC MEMBERSHIP CORPORATION	38.066	0.950	-	37.117	0.306	0.026	0.359	0.075	0.108
6	PAMELA J. FREEMAN CO-TRUSTEE ET AL	2.890	0.743	2.147	-	0.435	0.026	0.282	0.000	0.000
7	SHOPS AT CHESTNUT LLC.	2.700	0.043	2.657	-	0.039	0.004	0.000	0.000	0.000
8	THE COURTYARDS AT WEDDINGTON ROAD HOMEOWNERS ASSOCIATION INC.	1.228	0.030	-	1.198	0.004	0.021	0.000	0.000	0.005
9	HISHAM A. BEDWAN	0.550	0.030	0.520	-	0.013	0.000	0.009	0.009	0.000

PARCEL INDEX SHEET

PARCEL NO.	SHEET NO.	PROPERTY OWNERS NAMES
1	4	STALLINGS INVESTORS LLC.
2	4	WILLIAM J. BLACK ET AL
3	4	UNION ELECTRIC MEMBERSHIP CORPORATION
6	4	PAMELA J. FREEMAN CO-TRUSTEE ET AL
7	4	SHOPS AT CHESTNUT LLC.
8	4	THE COURTYARDS AT WEDDINGTON ROAD HOMEOWNERS ASSOCIATION INC.
9	4	HISHAM A. BEDWAN

REVISIONS

5/14/99

3/21/2017

L110414

COMPUTED BY:	F.MASTERSON	DATE:	10/23/19
CHECKED BY:	J Lawing	DATE:	2/18/20

NORTH CAROLINA DEPARTMENT OF TRANSPORTATION
DIVISION OF HIGHWAYS

PROJECT NO.	SHEET NO.
U-6091	3D-1

Note: Invert Elevations indicated are for Bid Purposes only and shall not be used for project construction stakeout. See "Standard Specifications For Roads and Structures, Section 300-5".

LIST OF PIPES, ENDWALLS, ETC. (FOR PIPES 48 INCHES & UNDER)

| LINE & STATION / SIZE / THICKNESS OR GAUGE | OFFSET | STRUCTURE NUMBER FROM | STRUCTURE NUMBER TO | TOP ELEVATION FT. | INVERT ELEVATION FT. | INVERT ELEVATION FT. | MINIMUM REQUIRED SLOPE % | Drainage Pipe (RCP, CSP, CAAP, HDPE, or PVC) 12 | 15 | 18 | 24 | 30 | 36 | 42 | 48 | C. S. PIPE .064 | .064 | .064 | .064 | .079 | .079 | .109 | .109 | R. C. PIPE CLASS III 12 | 15 | 18 | 24 | 30 | 36 | 42 | 48 | R. C. PIPE CLASS IV 12 | 15 | 18 | 24 | 30 | 36 | 42 | 48 | R. C. PIPE CLASS V 12 | 15 | 18 | 24 | 30 | 36 | 42 | 48 | DRAINAGE STRUCTURE MASONRY CY | QUANTITIES FOR DRAINAGE STRUCTURES (NOTE: TOTAL LIN. FT. FOR PAY QUANTITY SHALL BE A + (1.3 X B)) 0' THRU 5' EACH | A: 5' THRU 10' LIN. FT. | B: 10' AND ABOVE LIN. FT. | C.B. STD. 840.01 OR STD. 840.02 | FRAME, GRATES, AND HOOD STD. 840.03 GRATE TYPE E | F | G | CONCRETE TRANSITIONAL SECTION D.I. STD. 852.06 OR STD. 852.04 | C.B. STD. 852.05 | OPEN THROAT C.B. STD. 840.04 OR STD. 840.05 | CONCRETE BRIDGE APPROACH D.I. STD. 840.13 | D.I. STD. 840.14 OR STD. 840.15 | D.I. FRAME AND GRATES STD. 840.16 | G.D.I. TYPE "A" STD. 840.17 OR STD. 840.26 | G.D.I. TYPE "B" STD. 840.18 OR STD. 840.27 | G.D.I. TYPE "D" STD. 840.19 OR STD. 840.28 | G.D.I. (W.S. FLAT) FRAME WITH GRATE STD. 840.20 | G.D.I. (W.S. FLAT) FRAME W/ 2 GRATES STD. 840.20 | G.D.I. (W.S. SAG) FRAME W/ GRATE STD. 840.22 | G.D.I. (W.S. SAG) FRAME W/ 2 GRATES STD. 840.22 | G.D.I. (N.S. SAG) FRAME W/ GRATE STD. 840.24 | G.D.I. (N.S. SAG) FRAME W/ 2 GRATES STD. 840.24 | G.D.I. (N.S. FLAT) FRAME W/ GRATE STD. 840.29 | G.D.I. (N.S. FLAT) FRAME W/ 2 GRATES STD. 840.29 | DRIVEWAY D.I. STD. 840.30 | FRAME W/ GRATE FOR DRIVEWAY STD. 840.30 | J.B. STD. 840.31 OR STD. 840.32 | ANGLED VANE GRATES AND FRAMES STD. 840.33 | T.B.J.B. STD. 840.34 | T.B.D.I. STD. 840.35 | T.B.D.I. FOR STEEL GRATES STD. 840.36 | M.H. STD. 840.51, STD. 840.52, OR STD. 840.53 | M.H. FRAME AND COVER STD. 840.54 | CONVERT EXISTING C.B. TO J.B. | FLOWABLE FILL CY | CONCRETE COLLARS CL. "B" STD. 840.72 CY | CONCRETE AND BRICK PIPE PLUG STD. 840.71 CY | PIPE REMOVAL LIN. FT. | REMARKS |
|---|---|---|---

DocuSign Envelope ID: DACA5551D-EFD3-4964-B169-BD4A21FC842B

PROJECT REFERENCE NO.	SHEET NO.
U-6091	4
R/W SHEET NO.	

ROADWAY DESIGN ENGINEER — NORTH CAROLINA PROFESSIONAL SEAL ENGINEER FRANK D. MASTERSON — SEALED by: 037823 — 6/16/2020

HYDRAULICS ENGINEER — NORTH CAROLINA PROFESSIONAL SEAL 032615 ENGINEER JASON D. LINNEY — SEALED by: — 6/16/2020

DOCUMENT NOT CONSIDERED FINAL UNLESS ALL SIGNATURES COMPLETED

Kimley»Horn ©2020
200 SOUTH TRYON, SUITE 200
CHARLOTTE, N.C. 28202

NAD 83 NC GRID MA 2011

-L-
PI Sta 12+46.93
△ = 12° 14' 44.0" (LT)
D = 18° 54' 34.2"
L = 64.76'
T = 32.50'
R = 303.00'

-L-
PI Sta 13+52.41
△ = 27° 26' 02.1" (RT)
D = 19° 05' 54.9"
L = 143.64'
T = 73.23'
R = 300.00'

-Y2-
PI Sta 11+84.16
△ = 3° 37' 56.1" (RT)
D = 11° 27' 33.0"
L = 31.70'
T = 15.85'
R = 500.00'

-L-
PI Sta 14+82.91
△ = 22° 39' 04.4" (LT)
D = 19° 05' 54.9"
L = 118.60'
T = 60.09'
R = 300.00'

-L-
PI Sta 15+60.96
△ = 7° 22' 36.6" (RT)
D = 18° 54' 34.2"
L = 39.01'
T = 19.53'
R = 303.00'

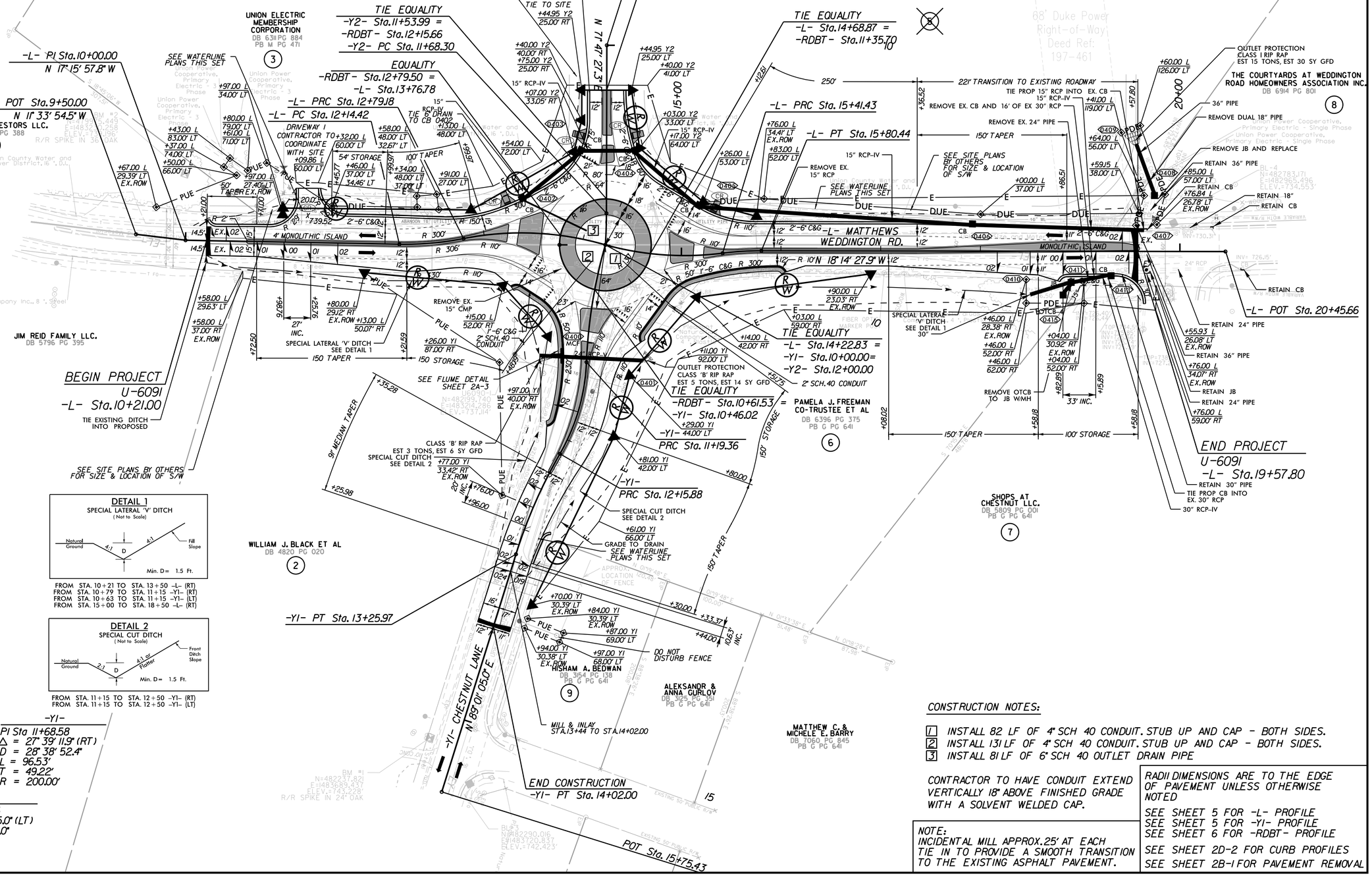

-Y1-
PI Sta 10+59.96
△ = 13° 40' 38.1" (LT)
D = 11° 27' 33.0"
L = 119.36'
T = 59.96'
R = 500.00'

-Y1-
PI Sta 11+68.58
△ = 27° 39' 11.9" (RT)
D = 28° 38' 52.4"
L = 96.53'
T = 49.22'
R = 200.00'

-Y1-
PI Sta 12+71.15
△ = 12° 36' 55.0" (LT)
D = 11° 27' 33.0"
L = 110.09'
T = 55.27'
R = 500.00'

DETAIL 1
SPECIAL LATERAL 'V' DITCH
(Not to Scale)
Natural Ground — 4:1 — D — 4:1 — Fill Slope
Min. D = 1.5 Ft.

FROM STA. 10+21 TO STA. 13+50 -L- (RT)
FROM STA. 10+79 TO STA. 11+15 -Y1- (RT)
FROM STA. 10+63 TO STA. 11+15 -Y1- (LT)
FROM STA. 15+00 TO STA. 18+50 -L- (RT)

DETAIL 2
SPECIAL CUT DITCH
(Not to Scale)
Natural Ground — 2:1 — D — 4:1 or Flatter — Front Ditch Slope
Min. D = 1.5 Ft.

FROM STA. 11+15 TO STA. 12+50 -Y1- (RT)
FROM STA. 11+15 TO STA. 12+50 -Y1- (LT)

REVISIONS

5/14/99

6/01/2017

CONSTRUCTION NOTES:

1. INSTALL 82 LF OF 4" SCH 40 CONDUIT. STUB UP AND CAP - BOTH SIDES.
2. INSTALL 131 LF OF 4" SCH 40 CONDUIT. STUB UP AND CAP - BOTH SIDES.
3. INSTALL 81 LF OF 6" SCH 40 OUTLET DRAIN PIPE

CONTRACTOR TO HAVE CONDUIT EXTEND VERTICALLY 18" ABOVE FINISHED GRADE WITH A SOLVENT WELDED CAP.

NOTE:
INCIDENTAL MILL APPROX. 25' AT EACH TIE IN TO PROVIDE A SMOOTH TRANSITION TO THE EXISTING ASPHALT PAVEMENT.

RADII DIMENSIONS ARE TO THE EDGE OF PAVEMENT UNLESS OTHERWISE NOTED

SEE SHEET 5 FOR -L- PROFILE
SEE SHEET 5 FOR -Y1- PROFILE
SEE SHEET 6 FOR -RDBT- PROFILE

SEE SHEET 2D-2 FOR CURB PROFILES
SEE SHEET 2B-1 FOR PAVEMENT REMOVAL

DocuSign Envelope ID: DACA551D-EFD3-4964-B169-BD4A21FC842B

5/14/99

Kimley»Horn ©2020
200 SOUTH TRYON, SUITE 200
CHARLOTTE, N.C. 28202

PROJECT REFERENCE NO.	SHEET NO.
U-6091	5

ROADWAY DESIGN ENGINEER — NORTH CAROLINA PROFESSIONAL SEAL 037983 ENGINEER FRANK D. MASTERSON, JR. — 12/17/2020

HYDRAULICS ENGINEER — NORTH CAROLINA PROFESSIONAL SEAL 032615 ENGINEER ALON D. LAWING — 12/17/2020

DOCUMENT NOT CONSIDERED FINAL UNLESS ALL SIGNATURES COMPLETED

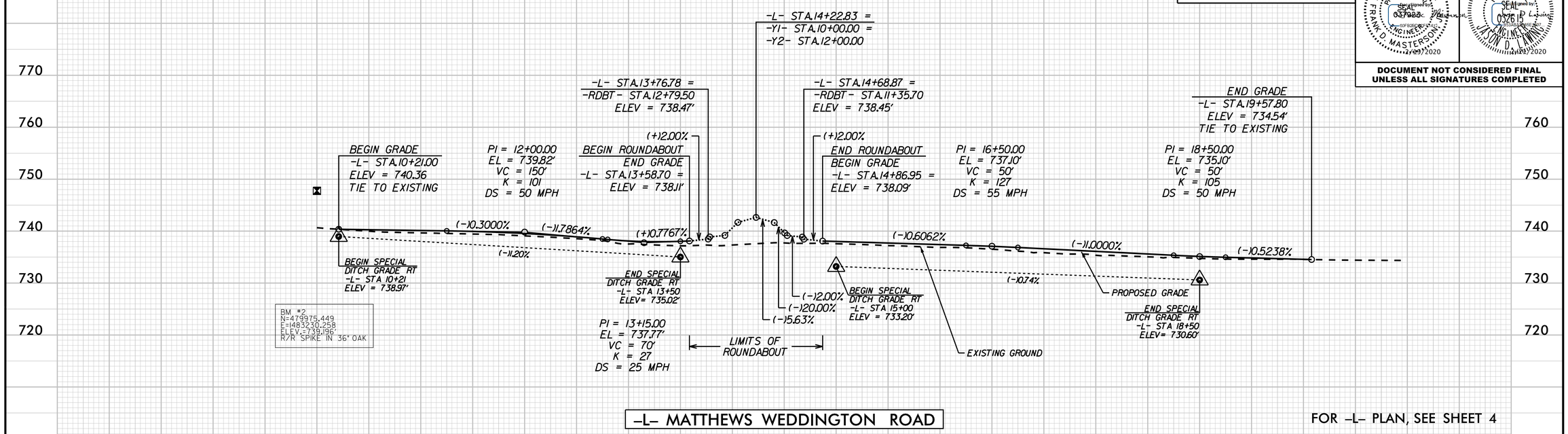

-L- MATTHEWS WEDDINGTON ROAD

FOR -L- PLAN, SEE SHEET 4

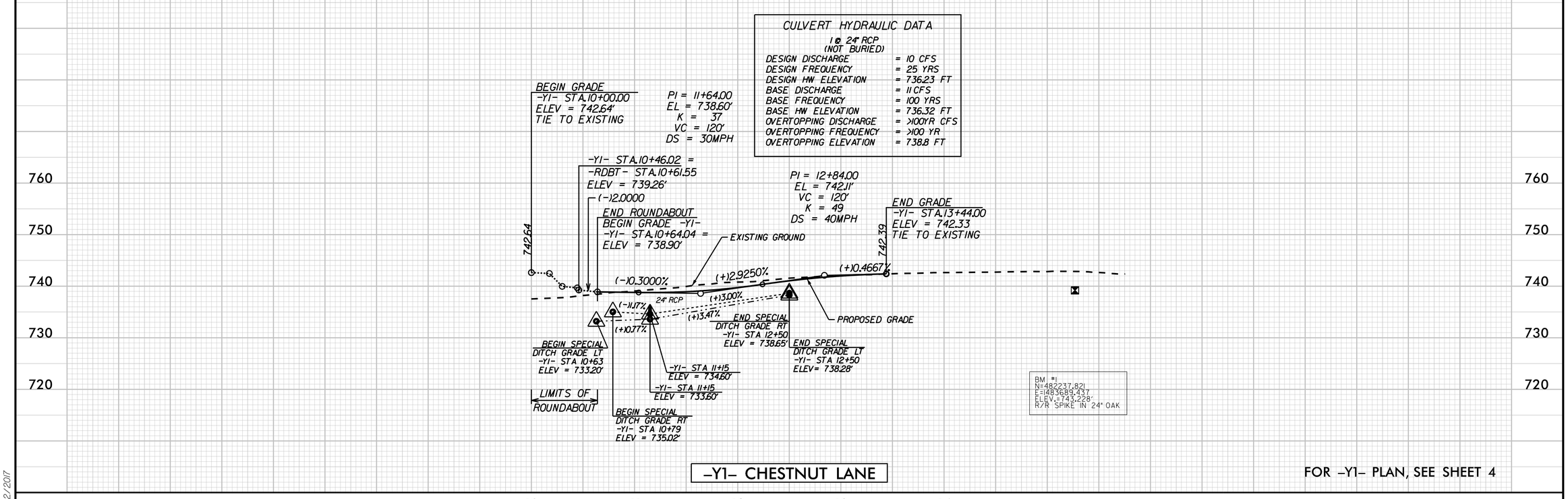

-Y1- CHESTNUT LANE

FOR -Y1- PLAN, SEE SHEET 4

2/02/2017

DocuSign Envelope ID: DACA551D-EFD3-4964-B169-BD4A21FC842B

5/14/99

Kimley»Horn ©2020
200 SOUTH TRYON, SUITE 200
CHARLOTTE, N.C. 28202

PROJECT REFERENCE NO.	SHEET NO.
U-6091	6

ROADWAY DESIGN ENGINEER: NORTH CAROLINA PROFESSIONAL SEAL ENGINEER FRANK O. MASTERSON III — Sealed by: 037923 — 11/13/2020

HYDRAULICS ENGINEER: NORTH CAROLINA PROFESSIONAL SEAL ENGINEER JASON D. LAWING — Sealed by: 032619 — 11/12/2020

DOCUMENT NOT CONSIDERED FINAL UNLESS ALL SIGNATURES COMPLETED

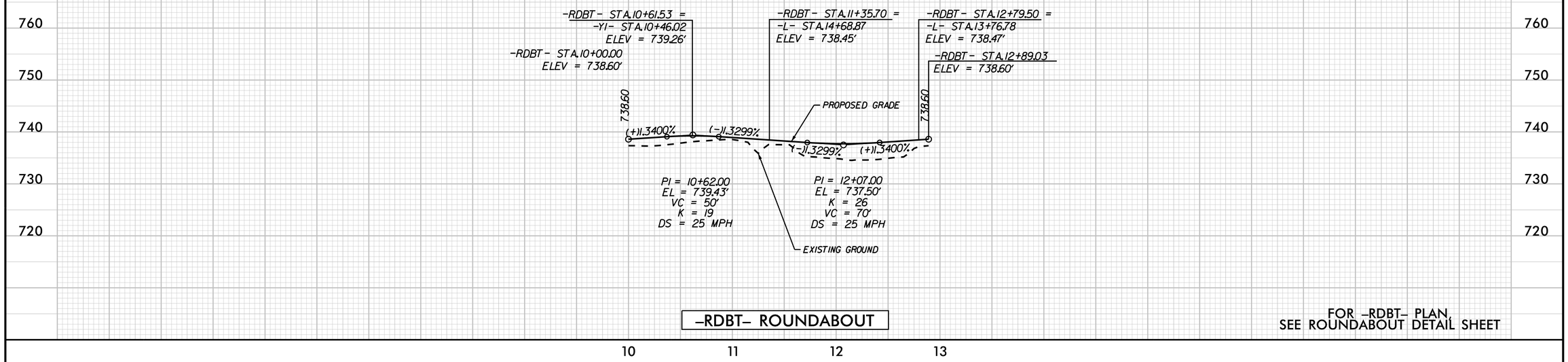

–RDBT– ROUNDABOUT

FOR –RDBT– PLAN, SEE ROUNDABOUT DETAIL SHEET

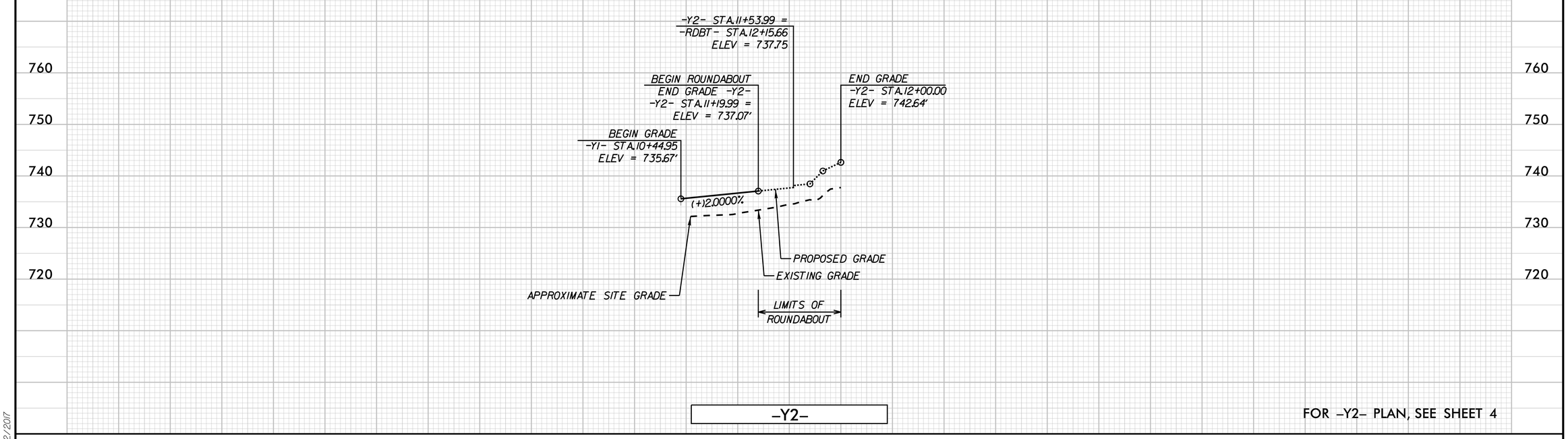

–Y2–

FOR –Y2– PLAN, SEE SHEET 4

2/02/2017

STATE OF NORTH CAROLINA
DIVISION OF HIGHWAYS

TRANSPORTATION MANAGEMENT PLAN

UNION COUNTY

LOCATION: INTERSECTION OF WEDDINGTON MATTHEWS ROAD (SR-1344) TO CHESTNUT LANE (SR-1362).

TYPE OF WORK: GRADING, PAVING, AND DRAINAGE IMPROVEMENTS

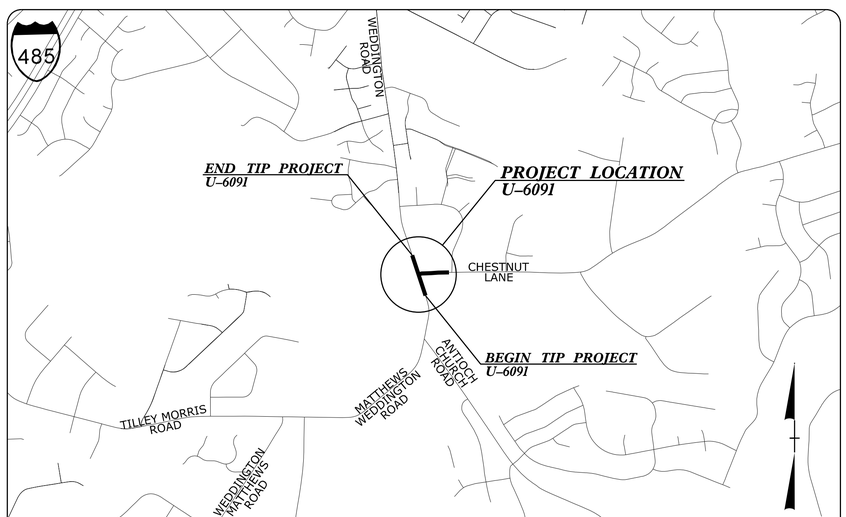

VICINITY MAP

INDEX OF SHEETS

SHEET NO.	TITLE
TMP-1	TITLE SHEET, AND INDEX OF SHEETS
TMP-1A THRU TMP-1C	LIST OF APPLICABLE ROADWAY STANDARD DRAWINGS, LEGEND, TEMPORARY PAVEMENT MARKINGS, MANAGEMENT STRATEGIES, AND GENERAL NOTES
TMP-2	TEMPORARY DETOUR ROUTES
TMP-3	CONSTRUCTION PHASING
TMP-4	PHASE 1 DETAILS

10/24/19 DATE SUBMITTED
SUBMITTAL:
- [ ] STAGING CONCEPT
- [ ] MIDPOINT
- [ ] PRE-FINAL
- [x] FINAL

Kimley»Horn

FRANK MASTERSON, P.E. — TRAFFIC CONTROL PROJECT ENGINEER
ANDREW WEEKS, E.I. — TRAFFIC CONTROL PROJECT DESIGN ENGINEER
ANDREW WEEKS, E.I. — TRAFFIC CONTROL DESIGN TECHNICIAN

APPROVED: DocuSigned by: Frank Masterson 60FB2BD82FF1412... 2/26/2020
DATE:

SEAL — NORTH CAROLINA PROFESSIONAL SEAL 037923 ENGINEER FRANK D. MASTERSON, JR.

WORK ZONE SAFETY & MOBILITY
"from the MOUNTAINS to the COAST"

N.C.D.O.T. WORK ZONE TRAFFIC CONTROL
1561 MAIL SERVICE CENTER (MSC) RALEIGH, NC 27699-1561
750 N. GREENFIELD PARKWAY, GARNER, NC 27529 (DELIVERY)
PHONE: (919) 773-2800 FAX: (919) 771-2745

STATE TRAFFIC MANAGEMENT ENGINEER
TRAFFIC CONTROL PROJECT ENGINEER
TRAFFIC CONTROL PROJECT DESIGN ENGINEER
TRAFFIC CONTROL DESIGN ENGINEER

DIVISION OF HIGHWAYS · STATE OF NORTH CAROLINA · DEPARTMENT OF TRANSPORTATION · WORK ZONE TRAFFIC CONTROL

SHEET NO. TMP-1

U-6091

TIP PROJECT: DJ00364

K:\CHL_PRJ\OII\036445 - U-6091 (Chestnut Rdbt)\Traffic\Traffic Control\TCP\Sheets\U-6091_rdy_tmp_1.dgn

2/26/2020

PROJ. REFERENCE NO.	SHEET NO.
U-6091	TMP-1A

ROADWAY STANDARD DRAWINGS

THE FOLLOWING ROADWAY STANDARDS AS SHOWN IN "ROADWAY STANDARD DRAWINGS" - PROJECT SERVICES UNIT - N.C. DEPARTMENT OF TRANSPORTATION - RALEIGH, N.C., DATED JANUARY 2018 ARE APPLICABLE TO THIS PROJECT AND BY REFERENCE HEREBY ARE CONSIDERED A PART OF THESE PLANS:

STD. NO.	TITLE
1101.01	WORK ZONE ADVANCE WARNING SIGNS
1101.03	TEMPORARY ROAD CLOSURES
1101.11	TRAFFIC CONTROL DESIGN TABLES
1110.01	STATIONARY WORK ZONE SIGNS
1110.02	PORTABLE WORK ZONE SIGNS
1115.01	FLASHING ARROW BOARDS
1180.01	SKINNY DRUMS
1130.01	DRUMS
1145.01	BARRICADES
1205.01	PAVEMENT MARKINGS - LINE TYPES AND OFFSETS
1205.02	PAVEMENT MARKINGS - TWO-LANE AND MULTI-LANE ROADWAYS

LEGEND

GENERAL

- DIRECTION OF TRAFFIC FLOW
- DIRECTION OF PEDESTRIAN TRAFFIC FLOW
- EXIST. PVMT.
- NORTH ARROW
- PROPOSED PVMT.
- TEMP. SHORING (LOCATION PURPOSES ONLY)
- WORK AREA
- REMOVAL

PAVEMENT MARKINGS

- EXISTING LINES
- TEMPORARY LINES

TRAFFIC CONTROL DEVICES

- BARRICADE (TYPE III)
- CONE
- TUBULAR MARKER
- DRUM
- SKINNY DRUM
- TEMPORARY CRASH CUSHION
- FLASHING ARROW BOARD
- FLAGGER
- LAW ENFORCEMENT
- TRUCK MOUNTED ATTENUATOR (TMA)
- CHANGEABLE MESSAGE SIGN

TEMPORARY SIGNING

- PORTABLE SIGN
- STATIONARY SIGN
- STATIONARY OR PORTABLE SIGN

PAVEMENT MARKERS

- CRYSTAL/CRYSTAL
- CRYSTAL/RED
- YELLOW/YELLOW

PAVEMENT MARKING SYMBOLS

- PAVEMENT MARKING SYMBOLS

Kimley»Horn

APPROVED: DATE: 2/25/2020

SEAL

NORTH CAROLINA PROFESSIONAL SEAL 037923 ENGINEER FRANK D. MASTERSON, JR.

DIVISION OF HIGHWAYS · STATE OF NORTH CAROLINA · DEPARTMENT OF TRANSPORTATION · WORK ZONE TRAFFIC CONTROL

ROADWAY STANDARD DRAWINGS & LEGEND

K:\CHL_PRJ\011036445 - U-6091\Chestnut Rdbt\Traffic\Traffic Control\TCP\Sheets\U-6091_rdy_tmp_1A.dgn

2/25/2020

PROJ. REFERENCE NO.	SHEET NO.
U-6091	TMP-1B

MANAGEMENT STRATEGIES

PROPOSED IMPROVEMENTS ALONG -L- MATTHEWS WEDDINGTON ROAD AND -Y1- CHESTNUT LANE WILL BE CONSTRUCTED UNDER A DETOUR.

GENERAL NOTES

CHANGES MAY BE REQUIRED WHEN PHYSICAL DIMENSIONS IN THE DETAIL DRAWINGS, STANDARD DETAILS, AND ROADWAY DETAILS ARE NOT ATTAINABLE TO MEET FIELD CONDITIONS OR RESULT IN DUPLICATE OR UNDESIRED OVERLAPPING OF DEVICES. MODIFICATION MAY INCLUDE: MOVING, SUPPLEMENTING, COVERING, OR REMOVAL OF DEVICES AS DIRECTED BY THE ENGINEER.

THE FOLLOWING GENERAL NOTES APPLY AT ALL TIMES FOR THE DURATION OF THE CONSTRUCTION PROJECT EXCEPT WHEN OTHERWISE NOTED IN THE PLAN OR DIRECTED BY THE ENGINEER.

TIME RESTRICTIONS

A) DO NOT CLOSE OR NARROW TRAVEL LANES DURING HOLIDAYS AND SPECIAL EVENTS AS FOLLOWS:

ROAD NAME	DAY AND TIME RESTRICTIONS
MATTHEWS WEDDINGTON ROAD	6 AM TO 6 PM
CHESTNUT LANE	MONDAY THRU FRIDAY

IN LIEU OF NIGHTTIME LANE CLOSURES, THE CONTRACTOR MAY WORK DURING DAYLIGHT HOURS WITH THE USE OF PRECAST BARRIER.

HOLIDAY

1. FOR ANY UNEXPECTED OCCURRENCE THAT CREATES UNUSUALLY HIGH TRAFFIC VOLUMES, AS DIRECTED BY THE ENGINEER.
2. FOR NEW YEAR'S, BETWEEN THE HOURS OF 6:00 A.M. DECEMBER 31st TO 9:00 P.M. JANUARY 2ND. IF NEW YEAR'S DAY IS ON A FRIDAY, SATURDAY, SUNDAY, OR MONDAY THEN UNTIL 9:00 A.M. THE FOLLOWING TUESDAY.
3. FOR EASTER, BETWEEN THE HOURS OF 6:00 A.M. TO 9:00 A.M. MONDAY.
4. FOR MEMORIAL DAY, BETWEEN THE HOURS OF 6:00 A.M. FRIDAY TO 9:00 A.M. TUESDAY.
5. FOR INDEPENDENCE DAY, BETWEEN THE HOURS OF 6:00 A.M. THE DAY BEFORE INDEPENDENCE DAY AND 9:00 A.M. THE DAY AFTER INDEPENDENCE DAY.
6. FOR LABOR DAY, BETWEEN THE HOURS OF 6:00 A.M. FRIDAY AND 9:00 A.M. TUESDAY.

TIME RESTRICTIONS (CONT.)

7. FOR THANKSGIVING DAY, BETWEEN THE HOURS OF 6:00 A.M. TUESDAY TO 9:00 P.M. MONDAY.
8. FOR CHRISTMAS, BETWEEN THE HOURS OF 6:00 A.M. THE FRIDAY BEFORE THE WEEK OF CHRISTMAS DAY AND 9:00 P.M. THE FOLLOWING TUESDAY AFTER THE WEEK OF CHRISTMAS.

ROAD NAME	DAY AND TIME RESTRICTIONS
MATTHEWS WEDDINGTON ROAD	6 AM TO 6 PM
CHESTNUT LANE	MONDAY THRU FRIDAY

IN LIEU OF NIGHTTIME LANE CLOSURES, THE CONTRACTOR MAY WORK DURING DAYLIGHT HOURS WITH THE USE OF PRECAST BARRIER.

C) DO NOT STOP TRAFFIC AS FOLLOWS, OR AS OTHERWISE DIRECTED BY THE ENGINEER:

ROAD NAME	DAY AND TIME RESTRICTIONS
MATTHEWS WEDDINGTON ROAD	6 AM TO 6 PM
CHESTNUT LANE	MONDAY THRU FRIDAY

IN LIEU OF NIGHTTIME LANE CLOSURES, THE CONTRACTOR MAY WORK DURING DAYLIGHT HOURS WITH THE USE OF PRECAST BARRIER.

D) DO NOT CONDUCT ANY HAULING OPERATIONS AGAINST THE FLOW OF TRAFFIC OF AN OPEN TRAVELWAY UNLESS THE HAULING OPERATION IS PROTECTED BY BARRIER OR GUARDRAIL OR AS DIRECTED BY THE ENGINEER.

LANE AND SHOULDER CLOSURE REQUIREMENTS

E) REMOVE LANE CLOSURE DEVICES AND SIGNS FROM THE LANE WHEN WORK IS NOT BEING PERFORMED BEHIND THE LANE CLOSURE OR WHEN A LANE CLOSURE IS NO LONGER NEEDED OR AS DIRECTED BY THE ENGINEER.

F) WHEN PERSONNEL AND/OR EQUIPMENT ARE WORKING WITHIN 15 FT OF AN OPEN TRAVEL LANE, CLOSE THE NEAREST OPEN SHOULDER USING ROADWAY STANDARD DRAWING NO. 1101.04 UNLESS THE WORK AREA IS PROTECTED BY BARRIER OR GUARDRAIL OR A LANE CLOSURE IS INSTALLED.

LANE AND SHOULDER CLOSURE REQUIREMENTS (CONT.)

G) WHEN PERSONNEL AND/OR EQUIPMENT ARE WORKING ON THE SHOULDER ADJACENT TO AN UNDIVIDED FACILITY AND WITHIN 5 FT OF AN OPEN TRAVEL LANE, CLOSE THE NEAREST OPEN TRAVEL LANE USING ROADWAY STANDARD DRAWING NO. 1101.02 UNLESS THE WORK AREA IS PROTECTED BY BARRIER OR GUARDRAIL.

WHEN PERSONNEL AND/OR EQUIPMENT ARE WORKING ON THE SHOULDER ADJACENT TO A DIVIDED FACILITY AND WITHIN 10 FT OF AN OPEN TRAVEL LANE, CLOSE THE NEAREST OPEN TRAVEL LANE USING ROADWAY STANDARD DRAWING NO. 1101.02 UNLESS THE WORK AREA IS PROTECTED BY BARRIER OR GUARDRAIL.

H) DO NOT WORK SIMULTANEOUSLY WITHIN 15 FT ON BOTH SIDES OF AN OPEN TRAVELWAY, RAMP, OR LOOP WITHIN THE SAME LOCATION UNLESS PROTECTED WITH GUARDRAIL OR BARRIER.

PAVEMENT EDGE DROP OFF REQUIREMENTS

I) BACKFILL AT A 6:1 SLOPE UP TO THE EDGE AND ELEVATION OF EXISTING PAVEMENT IN AREAS ADJACENT TO AN OPENED TRAVEL LANE THAT HAS AN EDGE OF PAVEMENT DROP-OFF AS FOLLOWS:

BACKFILL DROP-OFFS THAT EXCEED 2 INCHES ON ROADWAYS WITH POSTED SPEED LIMITS OF 45 MPH OR GREATER.

BACKFILL DROP-OFFS THAT EXCEED 3 INCHES ON ROADWAYS WITH POSTED SPEED LIMITS LESS THAN 45 MPH.

BACKFILL WITH SUITABLE COMPACTED MATERIAL, AS APPROVED BY THE ENGINEER, AT NO EXPENSE TO THE DEPARTMENT.

J) DO NOT EXCEED A DIFFERENCE OF 2 INCHES IN ELEVATION BETWEEN OPEN LANES OF TRAFFIC FOR NOMINAL LIFTS OF 1.5 INCHES. INSTALL ADVANCE WARNING "UNEVEN LANES" SIGNS (W8-11) 500 ft IN ADVANCE AND A MINIMUM OF EVERY HALF MILE THROUGHOUT THE UNEVEN AREA.

TRAFFIC PATTERN ALTERATIONS

K) NOTIFY THE ENGINEER THIRTY (30) CALENDAR DAYS PRIOR TO ANY TRAFFIC PATTERN ALTERATION.

Kimley»Horn

APPROVED: Frank Masterson DATE: 2/25/2020

SEAL

NORTH CAROLINA PROFESSIONAL SEAL 037923 ENGINEER FRANK D. MASTERSON, JR.

DIVISION OF HIGHWAYS STATE OF NORTH CAROLINA DEPARTMENT OF TRANSPORTATION WORK ZONE TRAFFIC CONTROL

TRANSPORTATION OPERATIONS PLAN

K:\CHL_PRJ\0\036445 - U-6091 (Chestnut Rdb)\Traffic\TrafficControl\TCP\Sheets\U-6091_rdy_Tmp_1B.dgn
2/25/2020

PROJ. REFERENCE NO.	SHEET NO.
U-6091	TMP-1C

GENERAL NOTES (CONT.)

SIGNING

L) INSTALL ADVANCE WORK ZONE WARNING SIGNS WHEN WORK IS WITHIN 40 FT FROM THE EDGE OF TRAVEL LANE AND NO MORE THAN THREE (3) DAYS PRIOR TO THE BEGINNING OF CONSTRUCTION.

M) PROVIDE SIGNING AND DEVICES REQUIRED FOR THE OFF-SITE DETOUR ROUTE AS SHOWN IN THE TRAFFIC CONTROL PLANS.

N) COVER OR REMOVE ALL SIGNS AND DEVICES REQUIRED TO CLOSE THE ROAD WHEN ROAD CLOSURE IS NOT IN OPERATION.

COVER OR REMOVE ALL SIGNS REQUIRED FOR THE OFF-SITE DETOUR WHEN THE DETOUR IS NOT IN OPERATION.

O) ENSURE ALL NECESSARY SIGNING IS IN PLACE PRIOR TO ALTERING ANY TRAFFIC PATTERN.

P) INSTALL BLACK ON ORANGE ''DIP'' SIGNS (W8-2) AND/OR "BUMP" SIGNS (W8-1) 500 ft IN ADVANCE OF THE UNEVEN AREA, OR AS DIRECTED BY THE ENGINEER.

TRAFFIC CONTROL DEVICES

Q) WHEN LANE CLOSURES ARE NOT IN EFFECT SPACE CHANNELIZING DEVICES IN WORK AREAS NO GREATER IN FEET THAN TWICE THE POSTED SPEED LIMIT (MPH) EXCEPT, 10 FT ON-CENTER IN RADII, AND 3 FT OFF THE EDGE OF AN OPEN TRAVELWAY. REFER TO STANDARD SPECIFICATIONS FOR ROADS AND STRUCTURES SECTIONS 1130 (DRUMS), 1135 (CONES) AND 1180 (SKINNY DRUMS) FOR ADDITIONAL REQUIREMENTS.

R) PLACE TYPE III BARRICADES, WITH "ROAD CLOSED" SIGN R11-2 ATTACHED, OF SUFFICIENT LENGTH TO CLOSE ENTIRE ROADWAY.

S) PLACE ADDITIONAL SETS OF THREE CHANNELIZING DEVICES DRUMS PERPENDICULAR TO THE EDGE OF TRAVELWAY ON 500 FT CENTERS WHEN UNOPENED LANES ARE CLOSED TO TRAFFIC.

T) PLACE "ROAD WORK AHEAD" SIGN IF FLAGGER OPERATION DOES NOT OCCUR WITHIN WORK AREA ESTABLISHED BY ADVANCED WARNING SIGNS ACCORDING TO STANDARD DRAWING NO. 1101.01.

PAVEMENT MARKINGS AND MARKERS

U) TIE PROPOSED PAVEMENT MARKING LINES TO EXISTING PAVEMENT MARKING LINES.

V) REMOVE/REPLACE ANY CONFLICTING/DAMAGED PAVEMENT MARKINGS AND MARKERS BY THE END OF EACH DAY'S OPERATION.

W) TRACE THE EXISTING AND PROPOSED MONOLITHIC ISLAND LOCATIONS WITH PROPER COLOR PAVEMENT MARKINGS PRIOR TO REMOVAL AND INSTALLATION. PLACE DRUMS TO DELINEATE ANY EXISTING AND PROPOSED MONOLITHIC ISLANDS AFTER REMOVAL AND BEFORE INSTALLATION

MISCELLANEOUS

X) LAW ENFORCEMENT MAY BE USED TO MAINTAIN TRAFFIC THROUGH THE WORK AREA AND/OR INTERSECTIONS AS DIRECTED BY THE ENGINEER.

Y) IN THE EVENT A TIE-IN CANNOT BE MADE IN ONE DAY'S TIME, BRING THE TIE-IN AREA TO AN APPROPRIATE ROADWAY ELEVATION AS DETERMINED BY THE ENGINEER. PLACE BLACK ON ORANGE "LOOSE GRAVEL" SIGNS (W8-7) AND BLACK ON ORANGE ''PAVEMENT ENDS'' SIGNS (W8-3) AND RESPECTIVELY IN ADVANCE OF THE UNEVEN AREAS. USE DRUMS TO DELINEATE THE EDGE OF ROADWAY ALONG UNPAVED AREAS.

Z) ALL WHEELCHAIR RAMP LOCATIONS SHALL BE DERIVED FROM STATIONING SHOWN ON PAVEMENT MARKING PLANS OR AS DIRECTED BY THE ENGINEER IN COORDINATION WITH THE SIGNING AND DELINEATION UNIT.

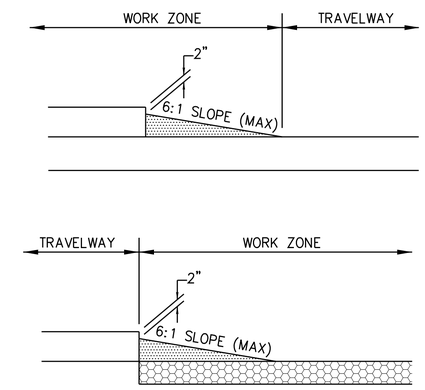

TEMPORARY PAVEMENT WEDGING DETAILS

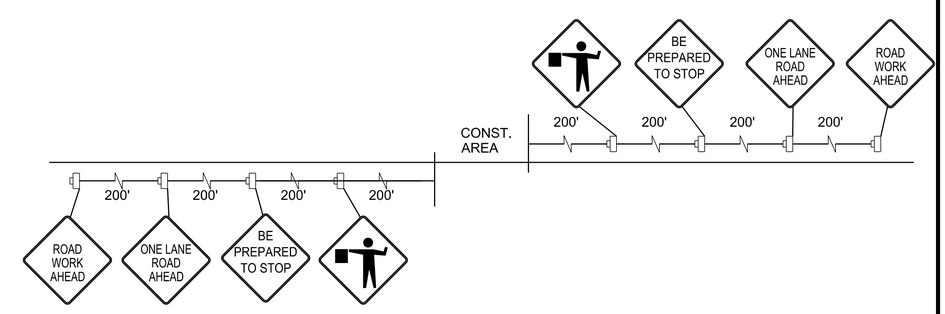

SIGN DETAIL FOR FLAGGER OPERATIONS

Kimley»Horn

APPROVED: Frank Masterson DATE: 2/25/2020

SEAL

NORTH CAROLINA PROFESSIONAL SEAL 037923 ENGINEER FRANK D. MASTERSON, JR.

DIVISION OF HIGHWAYS STATE OF NORTH CAROLINA DEPARTMENT OF TRANSPORTATION WORK ZONE TRAFFIC CONTROL

TRANSPORATION OPERATIONS PLAN

K:\CHL_PROJ\II036445 – U-6091\Chestnut RdbtNTrafficControlNTCP\Sheets\U-6091_rdy_tmp_IC.dgn

2/25/2020

PROJ. REFERENCE NO.	SHEET NO.
U-6091	TMP-2

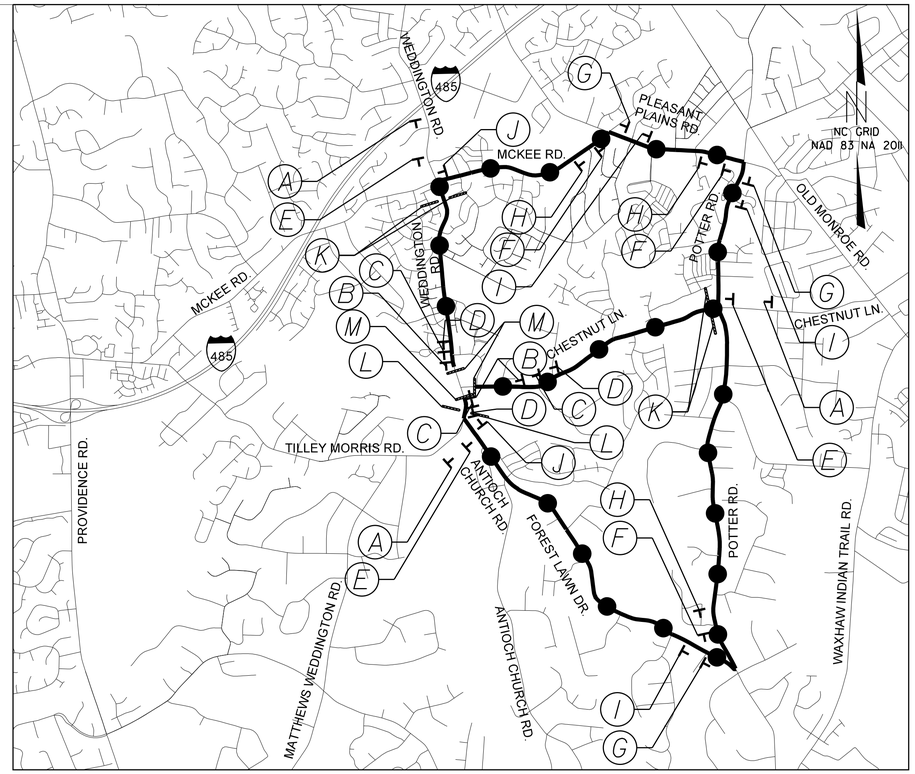

(A)

W20-3
48" X 48"

(B)

W20-3
48" X 48"

(C)

W20-3
48" X 48"

(D)

W20-1
48" X 48"

(E)

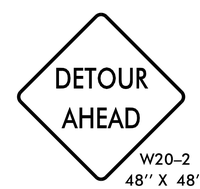

W20-2
48" X 48"

(F)

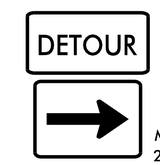

24" X 12"
M4-8

M6-1
21" X 15"

(G)

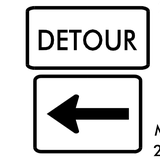

24" X 12"
M4-8

M6-1 L
21" X 15"

(H)

24" X 12"
M4-8

W1-1R
48" X 48"

(I)

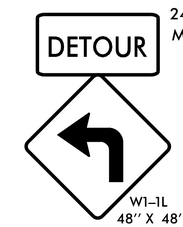

24" X 12"
M4-8

W1-1L
48" X 48"

(J)

M4-8 A
24" X 18"

(K)

R11-4
60" x 30"

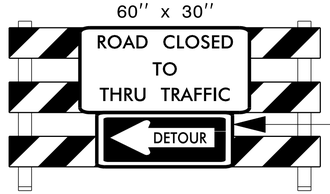

M4-10L
48" x 18"

TYPE III BARRICADE

(L)

R11-4
60" x 30"

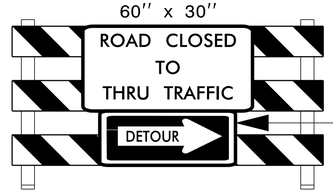

M4-10R
48" x 18"

TYPE III BARRICADE

(M)

R11-2
48" x 30"

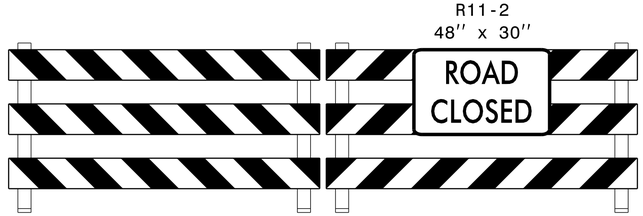

TYPE III BARRICADE(S)

LEGEND

- CHANGEABLE MESSAGE SIGN
- WORK AREA
- U-6091 DETOUR ROUTE
- STATIONARY SIGN

Kimley»Horn

APPROVED Frank Masterson DATE: 2/25/2020

NORTH CAROLINA PROFESSIONAL SEAL 037923 ENGINEER FRANK D. MASTERSON, JR.

DIVISION OF HIGHWAYS STATE OF NORTH CAROLINA DEPARTMENT OF TRANSPORTATION WORK ZONE TRAFFIC CONTROL

DETOUR SHEET
MATTHEWS WEDDINGTON RD./CHESTNUT LN.
PHASE 1

K:\CHL_PRJ\01\036445 - U-6091 (Chestnut Rdbt)\Traffic\Traffic Control\TCP\Sheets\U-6091_rdy_tmp_2.dgn

2/25/2020

PROJ. REFERENCE NO.	SHEET NO.
U-6091	TMP-3

CONSTRUCTION PHASING

PRIOR TO BEGINNING ANY CONSTRUCTION THE CONTRACTOR SHALL INSTALL WORK ZONE ADVANCE WARNING SIGNS AS SHOWN IN THE NCDOT ROADWAY STANDARD DRAWING NO. 1101.01

NOTE: CONTRACTOR TO INSTALL & COMPLETE ALL WATER LINE CONSTRCUTION FOR U-6091 PRIOR TO BEGINNING ANY WORK ON EITHER PROJECT.

PHASE I

FOR U-6091, WHILE MAINTAINING EXISTING TRAFFIC PATTERNS AND ACCESS TO ALL PROPERTIES, CONSTRUCT THE FOLLOWING:

STEP 1:

- INSTALL DETOUR & CLOSURE SIGNS AS SHOWN ON SHEET TMP-2B.

STEP 2:

- NEW LOCATION -RBT-, -L- MATTHEWS WEDDINGTON ROAD, -Y1- CHESTNUT LANE AND -Y2- AS SHOWN ON SHEETS TMP-4.

STEP 3:

- REMOVE DETOUR & CLOSURE SIGNS AS SHOWN ON SHEET TMP-2.

PROVIDE WEDGING AS REQUIRED FOR POSITIVE DRAINAGE AND SMOOTH TRANSITIONS BETWEEN EXISTING AND PROPOSED GRADES.

K:\CHL_PRJ\011036445 - U-6091(Chestnut Rdbt)\Traffic\Traffic Control\TCP\Sheets\U-6091_rdy_tmp_3.dgn

2/25/2020

Kimley»Horn

APPROVED: Frank Masterson DATE: 2/25/2020

NORTH CAROLINA PROFESSIONAL SEAL 037923 ENGINEER FRANK D. MASTERSON, JR.

DIVISION OF HIGHWAYS STATE OF NORTH CAROLINA DEPARTMENT OF TRANSPORTATION WORK ZONE TRAFFIC CONTROL

PHASING

PROJ. REFERENCE NO.	SHEET NO.
U-6091	TMP-4

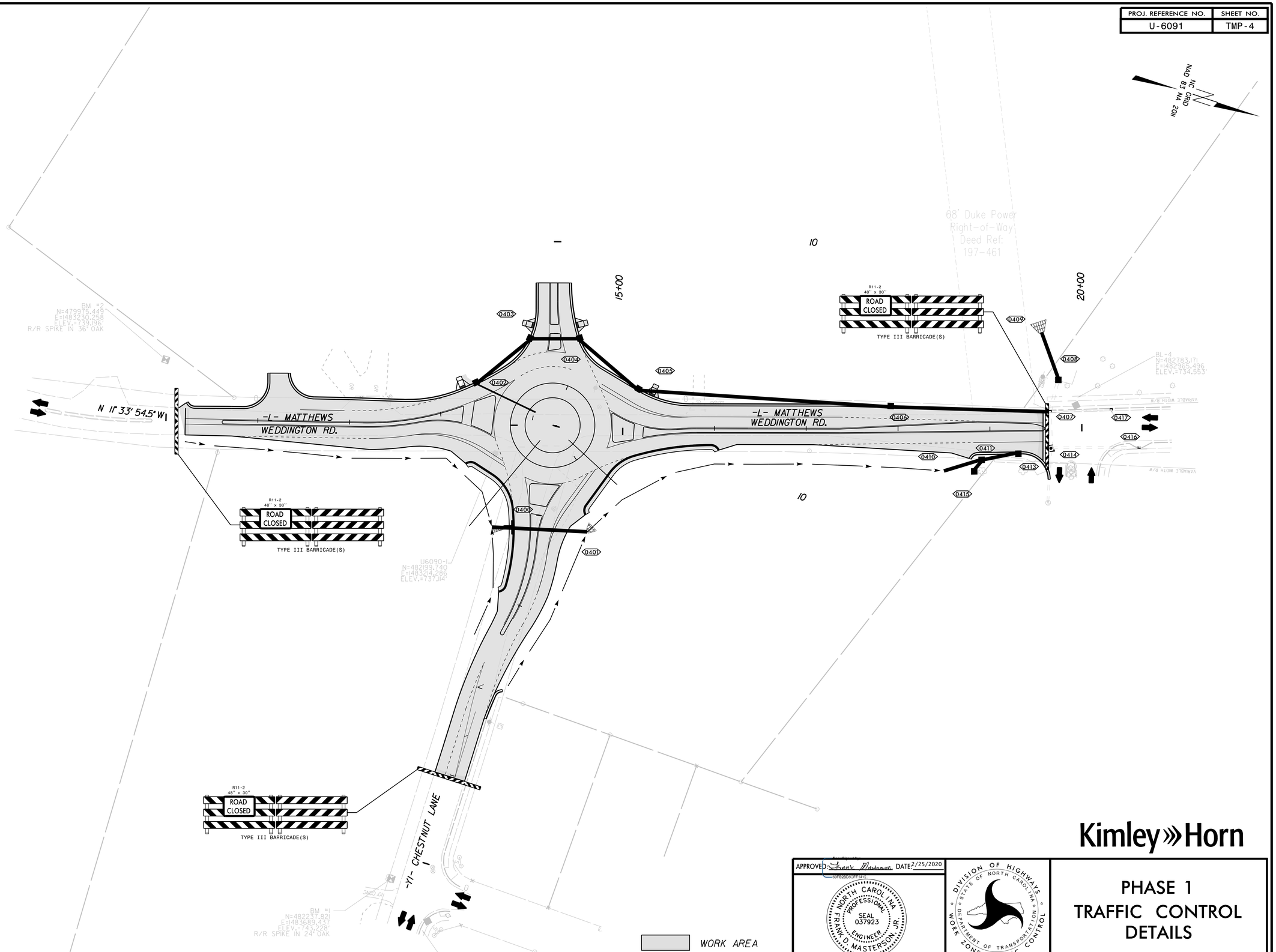

Kimley»Horn

APPROVED: Frank Masterson DATE 2/25/2020

DocuSigned by: 60F826DC3CF1412...

NORTH CAROLINA PROFESSIONAL SEAL 037923 ENGINEER FRANK D. MASTERSON, JR.

DIVISION OF HIGHWAYS
STATE OF NORTH CAROLINA
DEPARTMENT OF TRANSPORTATION
WORK ZONE TRAFFIC CONTROL

PHASE 1 TRAFFIC CONTROL DETAILS

K:\CHL_PRJ\0110036445 - U-6091(Chestnut Rdbt)\Traffic\Traffic Control\TCP\Sheets\U-6091_rdy_tmp_05.dgn

2/25/2020

PROJECT: U-6091

TIP #

STATE	STATE PROJECT REFERENCE NO.	SHEET NO.	TOTAL SHEETS
N.C.	U-6091	EC-1	

STATE PROJ. NO.	F. A. PROJ. NO.	DESCRIPTION
47885.1.1	STBGDA-1003(167)	PE

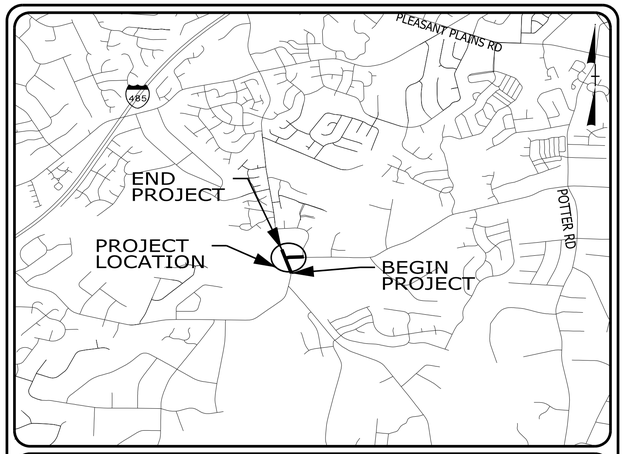

VICINITY MAP
NOT TO SCALE

STATE OF NORTH CAROLINA
DIVISION OF HIGHWAYS

PLAN FOR PROPOSED
HIGHWAY EROSION CONTROL

UNION COUNTY

LOCATION: ***INTERSECTION OF SR 1345 (WEDDINGTON-MATTHEWS ROAD) AND SR 1362 (CHESTNUT LANE ROAD)***

TYPE OF WORK: ***GRADING, DRAINAGE, PAVING, AND SIGNING***

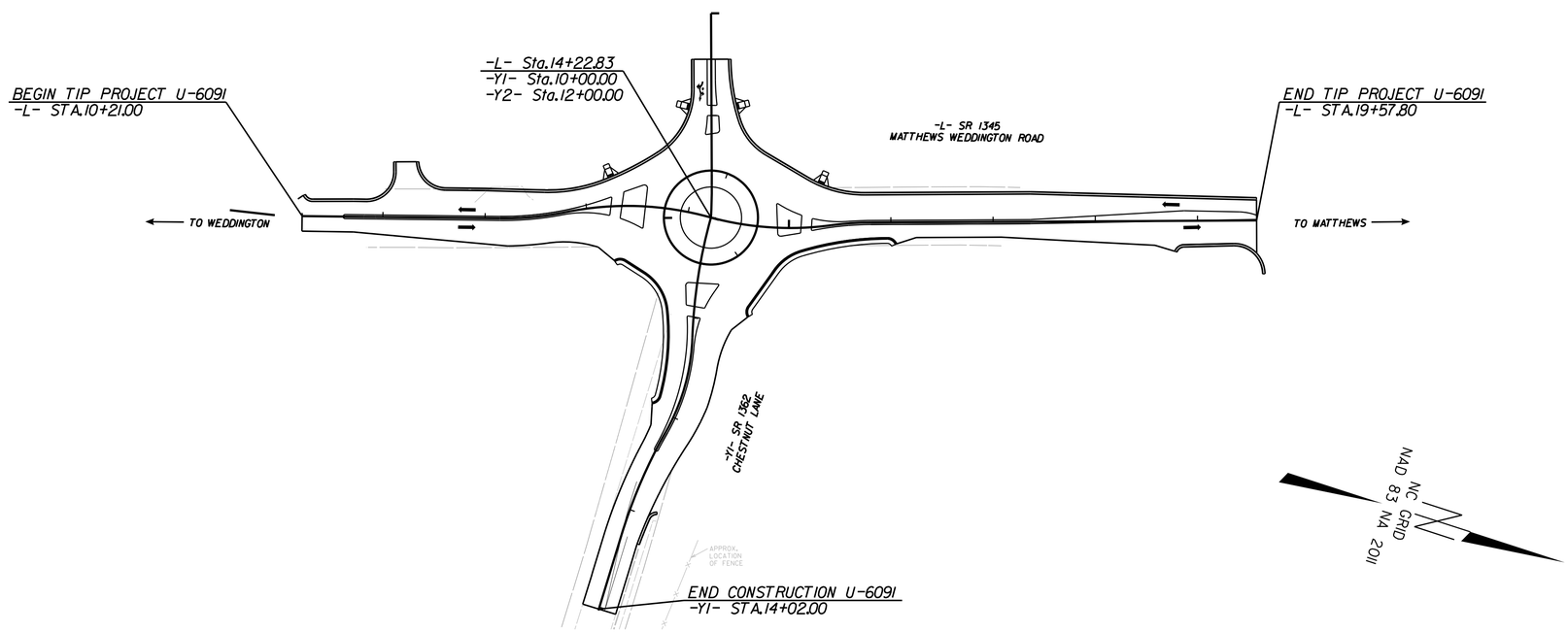

EROSION AND SEDIMENT CONTROL MEASURES

Std. #	Description	Symbol
1630.03	Temporary Silt Ditch	TSD
1630.05	Temporary Diversion	TD
1605.01	Temporary Silt Fence	
1606.01	Special Sediment Control Fence	
1622.01	Temporary Berms and Slope Drains	
1630.02	Silt Basin Type B	
1633.01	Temporary Rock Silt Check Type-A	
	Temporary Rock Silt Check Type-A with Matting and Polyacrylamide (PAM)	
1633.02	Temporary Rock Silt Check Type-B	
	Wattle / Coir Fiber Wattle	SW CFW
	Wattle / Coir Fiber Wattle with Polyacrylamide (PAM)	
1634.01	Temporary Rock Sediment Dam Type-A	
1634.02	Temporary Rock Sediment Dam Type-B	
1635.01	Rock Pipe Inlet Sediment Trap Type-A	
1635.02	Rock Pipe Inlet Sediment Trap Type-B	
1630.04	Stilling Basin	
1630.06	Special Stilling Basin	
	Rock Inlet Sediment Trap:	
1632.01	Type A	A
1632.02	Type B	B
1632.03	Type C	C
	Skimmer Basin	
	Tiered Skimmer Basin	
	Infiltration Basin	

THIS PROJECT CONTAINS EROSION CONTROL PLANS FOR CLEARING AND GRUBBING PHASE OF CONSTRUCTION.

GRAPHIC SCALE

50 25 0 50 100
PLANS

THESE EROSION AND SEDIMENT CONTROL PLANS COMPLY WITH THE APPLICABLE REGULATIONS SET FORTH BY THE NCG-010000 GENERAL CONSTRUCTION PERMIT EFFECTIVE APRIL 1, 2019 AND ISSUED BY THE NORTH CAROLINA DEPARTMENT OF ENVIRONMENTAL QUALITY DIVISION OF WATER RESOURCES.

Kimley»Horn ©2020

NC LICENSE #F-0102
200 SOUTH TRYON STREET, SUITE 200
CHARLOTTE, NORTH CAROLINA 28202
PHONE: (704) 333-5131

Prepared in the Office of:

KIMLEY HORN

200 SOUTH TRYON STREET, SUITE 200
CHARLOTTE, NORTH CAROLINA 28202

Designed by:

ELIZABETH LYNCH, PE ***3716***

NAME *LEVEL III CERTIFICATION NO.*

Roadway Standard Drawings

The following roadway english standards as appear in "Roadway Standard Drawings"– Roadway Design Unit – N. C. Department of Transportation – Raleigh, N. C., dated January 2018 and the latest revison thereto are applicable to this project and by reference hereby are considered a part of these plans.

1604.01	Railroad Erosion Control Detail	1632.01	Rock Inlet Sediment Trap Type A
1605.01	Temporary Silt Fence	1632.02	Rock Inlet Sediment Trap Type B
1606.01	Special Sediment Control Fence	1632.03	Rock Inlet Sediment Trap Type C
1607.01	Gravel Construction Entrance	1633.01	Temporary Rock Silt Check Type A
1622.01	Temporary Berms and Slope Drains	1633.02	Temporary Rock Silt Check Type B
1630.01	Riser Basin	1634.01	Temporary Rock Sediment Dam Type A
1630.02	Silt Basin Type B	1634.02	Temporary Rock Sediment Dam Type B
1630.03	Temporary Silt Ditch	1635.01	Rock Pipe Inlet Sediment Trap Type A
1630.04	Stilling Basin	1635.02	Rock Pipe Inlet Sediment Trap Type B
1630.05	Temporary Diversion	1640.01	Coir Fiber Baffle
1630.06	Special Stilling Basin	1645.01	Temporary Stream Crossing
1631.01	Matting Installation		

$$$$$SYSTIME$$$$$
$$$$$USERNAME$$$$$

Kimley»Horn ©2020
200 SOUTH TRYON STREET, SUITE 200
CHARLOTTE, N.C. 28202

RIGHT-OF-WAY REV.

CONST. REV.

PROJECT REFERENCE NO.	SHEET NO.
U-6091	EC-2

REVISIONS

WATTLE WITH POLYACRYLAMIDE (PAM) DETAIL

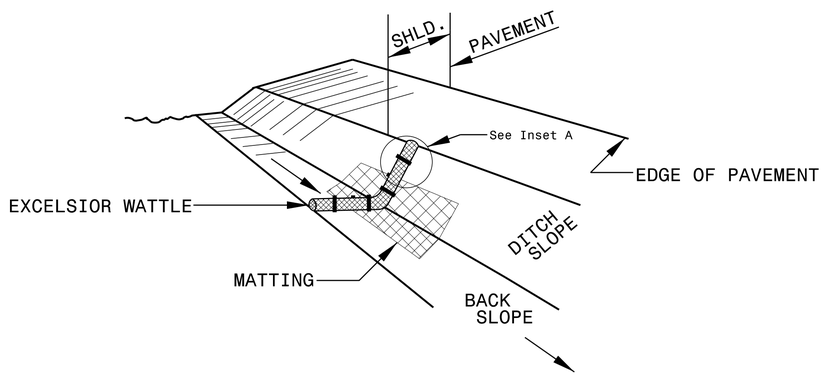

ISOMETRIC VIEW

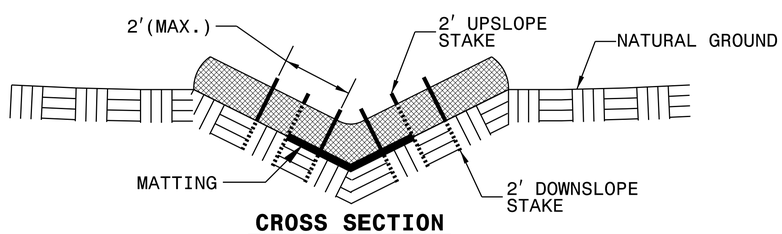

CROSS SECTION VEE DITCH

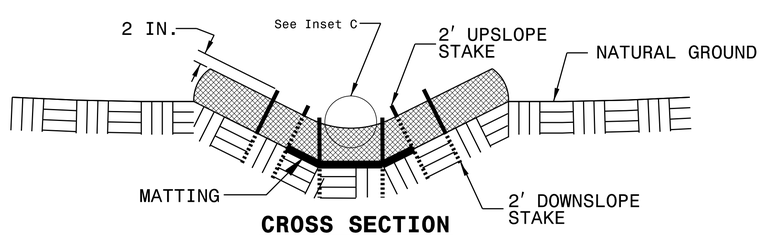

CROSS SECTION TRAPEZOIDAL DITCH

NOTES:

USE MINIMUM 12 IN. DIAMETER EXCELSIOR WATTLE.

USE 2 FT. WOODEN STAKES WITH A 2 IN. BY 2 IN. NOMINAL CROSS SECTION.

ONLY INSTALL WATTLE(S) TO A HEIGHT IN DITCH SO FLOW WILL NOT WASH AROUND WATTLE AND SCOUR DITCH SLOPES AND AS DIRECTED.

INSTALL A MINIMUM OF 2 UPSLOPE STAKES AND 4 DOWNSLOPE STAKES AT AN ANGLE TO WEDGE WATTLE TO BOTTOM OF DITCH.

PROVIDE STAPLES MADE OF 0.125 IN. DIAMETER STEEL WIRE FORMED INTO A U SHAPE NOT LESS THAN 12″ IN LENGTH.

INSTALL STAPLES APPROXIMATELY EVERY 1 LINEAR FOOT ON BOTH SIDES OF WATTLE AND AT EACH END TO SECURE IT TO THE SOIL.

INSTALL MATTING IN ACCORDANCE WITH SECTION 1631 OF THE STANDARD SPECIFICATIONS.

PRIOR TO POLYACRYLAMIDE (PAM) APPLICATION, OBTAIN A SOIL SAMPLE FROM PROJECT LOCATION, AND FROM OFFSITE MATERIAL, AND ANALYZE FOR APPROPRIATE PAM FLOCCULANT TO BE APPLIED TO EACH WATTLE.

INITIALLY APPLY 2 OUNCES OF ANIONIC OR NEUTRALLY CHARGED PAM OVER WATTLE WHERE WATER WILL FLOW AND 1 OUNCE OF PAM ON MATTING ON EACH SIDE OF WATTLE. REAPPLY PAM AFTER EVERY RAINFALL EVENT THAT IS EQUAL TO OR EXCEEDS 0.50 IN.

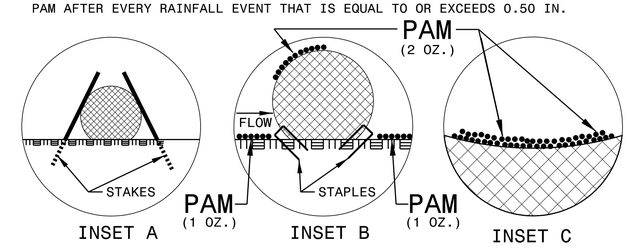

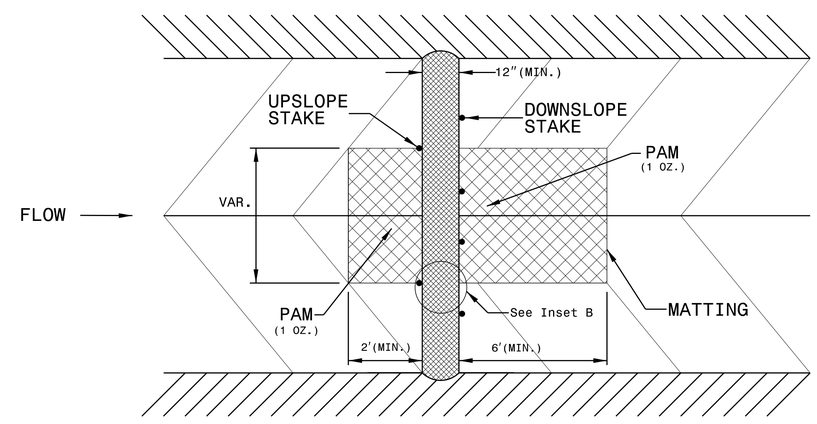

TOP VIEW

Kimley»Horn ©2020
200 SOUTH TRYON STREET, SUITE 200
CHARLOTTE, N.C. 28202

RIGHT-OF-WAY REV.

CONST. REV.

PROJECT REFERENCE NO.	SHEET NO.
U-6091	EC-2A

REVISIONS

TEMPORARY ROCK SILT CHECK TYPE 'A' WITH EXCELSIOR MATTING AND POLYACRYLAMIDE (PAM)

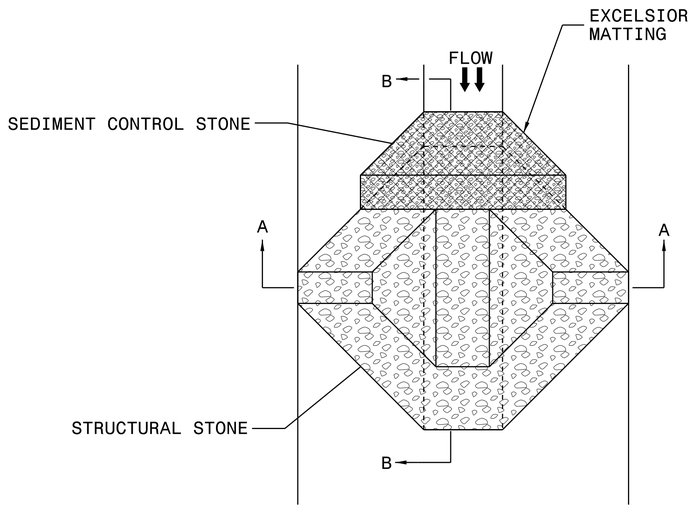

PLAN

NOTES:

INSTALL TEMPORARY ROCK SILT CHECK TYPE A IN ACCORDANCE WITH ROADWAY STANDARD DRAWING NO. 1633.01.

USE EXCELSIOR FOR MATTING MATERIAL AND ANCHOR MATTING SECTION AT TOP AND BOTTOM WITH CLASS B STONE.

PRIOR TO POLYACRYLAMIDE (PAM) APPLICATION, OBTAIN A SOIL SAMPLE FROM PROJECT LOCATION, AND FROM OFFSITE MATERIAL, AND ANALYZE FOR APPROPRIATE PAM FLOCCULANT TO BE APPLIED TO EACH ROCK SILT CHECK.

INITIALLY APPLY 4 OUNCES OF POLYACRYLAMIDE (PAM) TO TOP OF MATTING SECTION AND AFTER EVERY RAINFALL EVENT THAT EQUALS OR EXCEEDS 0.50 INCHES.

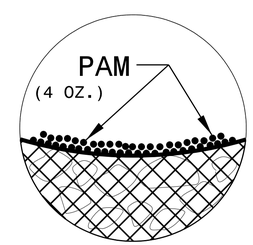

INSET A

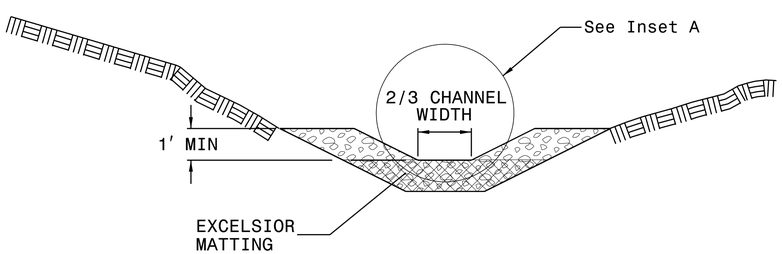

SECTION A-A

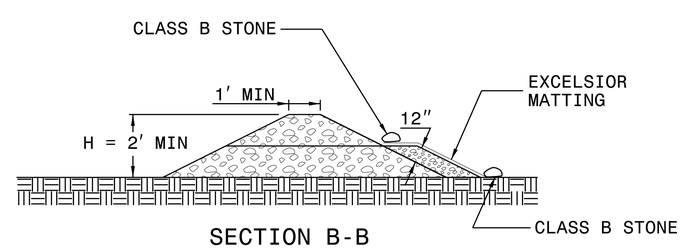

SECTION B-B

NOT TO SCALE

5/14/99

REVISIONS

Kimley»Horn ©2020
200 SOUTH TRYON STREET, SUITE 200
CHARLOTTE, N.C. 28202

RIGHT-OF-WAY REV.

CONST. REV.

PROJECT REFERENCE NO.	SHEET NO.
U-6091	EC-3

DIVISION OF HIGHWAYS
STATE OF NORTH CAROLINA

SOIL STABILIZATION SUMMARY SHEET

MATTING FOR EROSION CONTROL

CONST SHEET NO.	LINE	FROM STATION	TO STATION	SIDE	ESTIMATE (SY)
DITCHES					
4	-L-	10+50	12+70	RT	400
4	-L-	12+70	13+50	RT	75
4	-L-	15+00	17+00	RT	185
4	-L-	17+00	18+88	RT	175
4	-Y1-	11+14	12+50	LT	125
4	-Y1-	11+15	12+00	RT	80
				SUBTOTAL	1,040
MISCELLANEOUS MATTING TO BE INSTALLED AS DIRECTED BY THE ENGINEER					100
				TOTAL	1,140
				SAY	1,200

PERMANENT SOIL REINFORCEMENT MAT

CONST SHEET NO.	LINE	FROM STATION	TO STATION	SIDE	ESTIMATE (SY)
				SUBTOTAL	0
		ADDITIONAL PSRM TO BE INSTALLED			0
				TOTAL	0
				SAY	0

2/25/2020

Kimley»Horn ©2020
200 SOUTH TRYON STREET, SUITE 200
CHARLOTTE, N.C. 28202

RIGHT-OF-WAY REV.
CONST. REV.

PROJECT REFERENCE NO.	SHEET NO.
U-6091	EC-3A

DIVISION OF HIGHWAYS
STATE OF NORTH CAROLINA

SOIL STABILIZATION TIMEFRAMES

SITE DESCRIPTION	STABILIZATION TIME	TIMEFRAME EXCEPTIONS
PERIMETER DIKES, SWALES, DITCHES AND SLOPES	7 DAYS	NONE
HIGH QUALITY WATER (HQW) ZONES	7 DAYS	NONE
SLOPES STEEPER THAN 3:1	7 DAYS	IF SLOPES ARE 10' OR LESS IN LENGTH AND ARE NOT STEEPER THAN 2:1, 14 DAYS ARE ALLOWED.
SLOPES 3:1 OR FLATTER	14 DAYS	7 DAYS FOR SLOPES GREATER THAN 50' IN LENGTH.
ALL OTHER AREAS WITH SLOPES FLATTER THAN 4:1	14 DAYS	NONE, EXCEPT FOR PERIMETERS AND HQW ZONES.

REVISIONS

CLEARING AND GRUBBING
EROSION CONTROL FOR
CONSTRUCTION SHEET 4

Kimley»Horn ©2020

200 SOUTH TRYON, SUITE 200
CHARLOTTE, N.C. 28202

PROJECT REFERENCE NO.	SHEET NO.
U-6091	EC-4/CONS.4

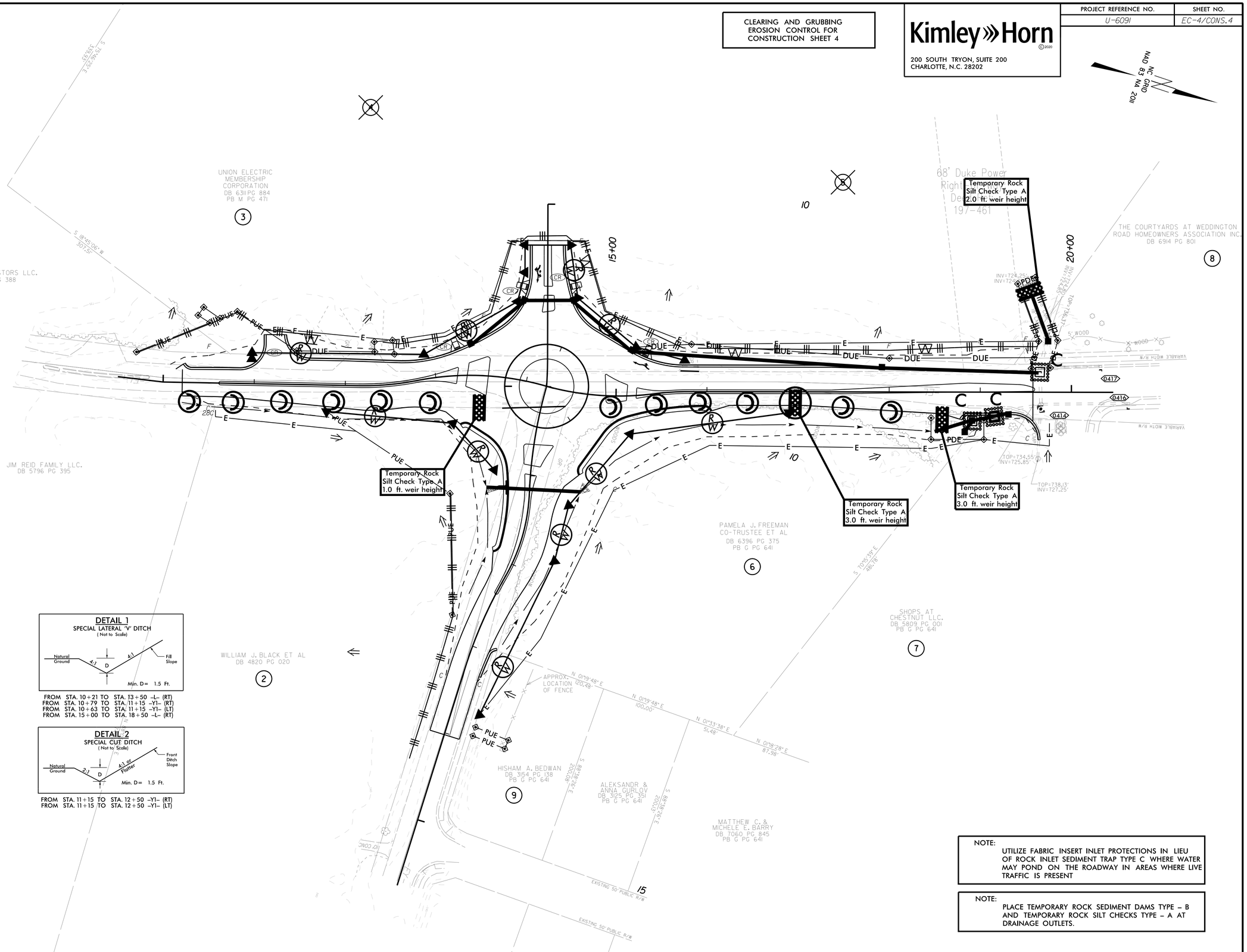

DETAIL 1
SPECIAL LATERAL 'V' DITCH
(Not to Scale)

FROM STA. 10+21 TO STA. 13+50 –L– (RT)
FROM STA. 10+79 TO STA. 11+15 –Y1– (RT)
FROM STA. 10+63 TO STA. 11+15 –Y1– (LT)
FROM STA. 15+00 TO STA. 18+50 –L– (RT)

DETAIL 2
SPECIAL CUT DITCH
(Not to Scale)

FROM STA. 11+15 TO STA. 12+50 –Y1– (RT)
FROM STA. 11+15 TO STA. 12+50 –Y1– (LT)

NOTE:
UTILIZE FABRIC INSERT INLET PROTECTIONS IN LIEU OF ROCK INLET SEDIMENT TRAP TYPE C WHERE WATER MAY POND ON THE ROADWAY IN AREAS WHERE LIVE TRAFFIC IS PRESENT

NOTE:
PLACE TEMPORARY ROCK SEDIMENT DAMS TYPE – B AND TEMPORARY ROCK SILT CHECKS TYPE – A AT DRAINAGE OUTLETS.

REVISIONS

2/02/2017

PROJECT REFERENCE NO.	SHEET NO.
U-6091	EC-5/CONS.5

Kimley»Horn ©2020
200 SOUTH TRYON, SUITE 200
CHARLOTTE, N.C. 28202

NAD 83 NC GRID 2011

REVISIONS

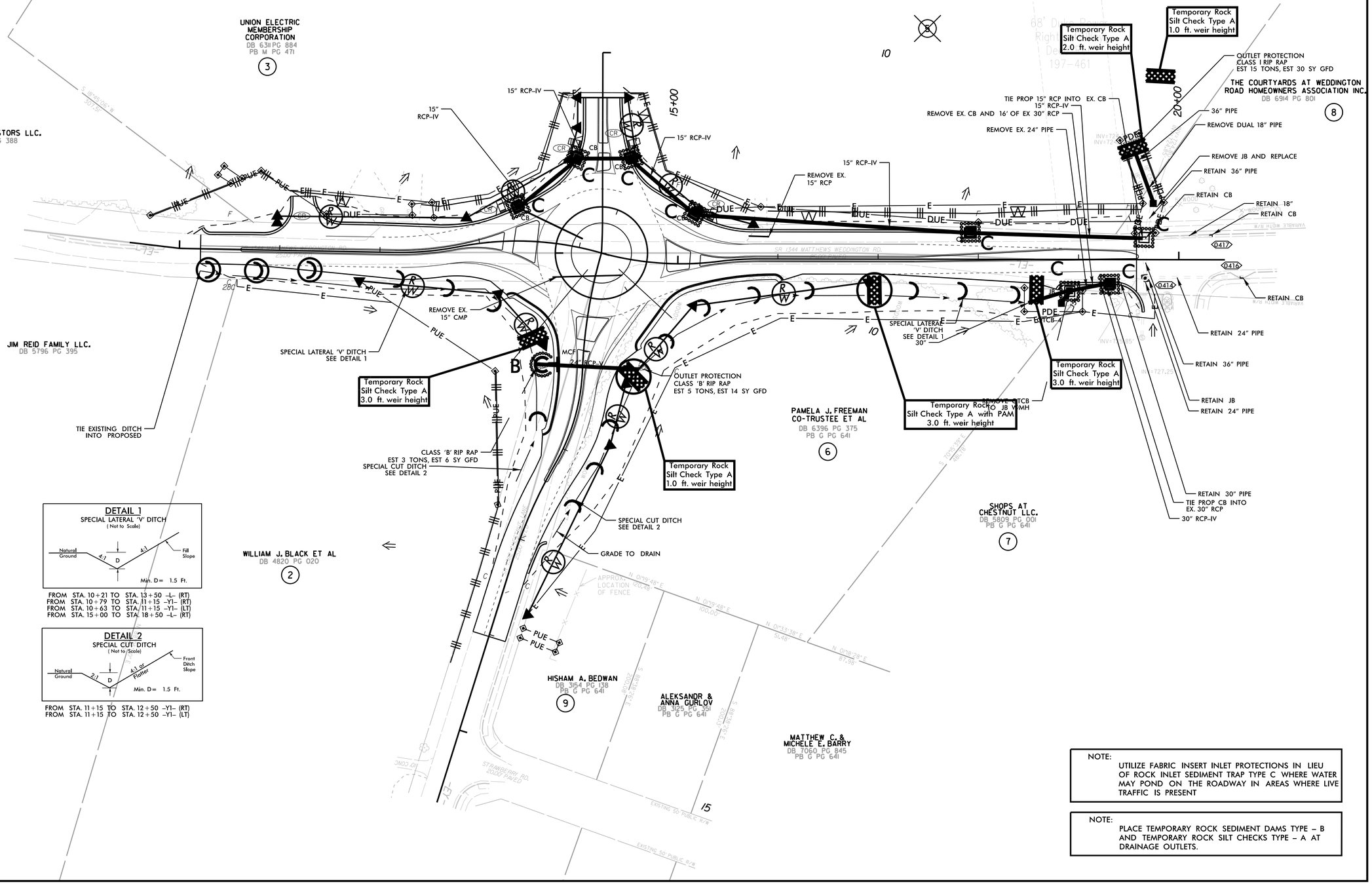

DETAIL 1
SPECIAL LATERAL 'V' DITCH
(Not to Scale)

Natural Ground — 4:1 — D — 4:1 — Fill Slope

Min. D= 1.5 Ft.

FROM STA. 10+21 TO STA. 13+50 –L– (RT)
FROM STA. 10+79 TO STA. 11+15 –Y1– (RT)
FROM STA. 10+63 TO STA. 11+15 –Y1– (LT)
FROM STA. 15+00 TO STA. 18+50 –L– (RT)

DETAIL 2
SPECIAL CUT DITCH
(Not to Scale)

Natural Ground — 2:1 — D — 4:1 or Flatter — Front Ditch Slope

Min. D= 1.5 Ft.

FROM STA. 11+15 TO STA. 12+50 –Y1– (RT)
FROM STA. 11+15 TO STA. 12+50 –Y1– (LT)

NOTE:
UTILIZE FABRIC INSERT INLET PROTECTIONS IN LIEU OF ROCK INLET SEDIMENT TRAP TYPE C WHERE WATER MAY POND ON THE ROADWAY IN AREAS WHERE LIVE TRAFFIC IS PRESENT

NOTE:
PLACE TEMPORARY ROCK SEDIMENT DAMS TYPE – B AND TEMPORARY ROCK SILT CHECKS TYPE – A AT DRAINAGE OUTLETS.

2/02/2017

CONTRACT: DJ00364 T.I.P.: U-6091

TIP NO.	SHEET NO.
U-6091	PMP-1

SEAL

NORTH CAROLINA PROFESSIONAL SEAL 037923 ENGINEER FRANK MASTERSON, JR.

Signed by: 2/25/2020

DOCUMENT NOT CONSIDERED FINAL UNLESS ALL SIGNATURES COMPLETED

STATE OF NORTH CAROLINA
DEPARTMENT OF TRANSPORTATION

PAVEMENT MARKING PLAN
UNION COUNTY

LOCATION: INTERSECTION OF SR 1345 (WEDDINGTON–MATTHEWS ROAD) AND SR 1362 (CHESTNUT LANE ROAD)

INDEX

SHEET NO.	DESCRIPTION
PMP-1	PAVEMENT MARKING PLAN TITLE AND SHEDULE SHEET
PMP-2	PAVEMENT MARKING DETAIL

ROADWAY STANDARD DRAWING

THE FOLLOWING ROADWAY STANDARDS AS APPEAR IN "ROADWAY STANDARD DRAWINGS" - PROJECT SERVICES UNIT - N.C. DEPARTMENT OF TRANSPORTATION - RALEIGH, N.C., DATED JANUARY 2012 ARE APPLICABLE TO THIS PROJECT AND BY REFERENCE HEREBY ARE CONSIDERED A PART OF THESE PLANS:

STD. NO.	TITLE
1205.01	PAVEMENT MARKINGS - LINE TYPES AND OFFSETS
1205.02	PAVEMENT MARKINGS - TWO-LANE AND MULTILANE ROADWAYS
1205.04	PAVEMENT MARKINGS - INTERSECTIONS
1205.05	PAVEMENT MARKINGS - TURN LANES
1205.07	PAVEMENT MARKINGS - PEDESTRIAN CROSSWALKS
1205.08	PAVEMENT MARKINGS - SYMBOLS AND WORD MESSAGES
1205.09	PAVEMENT MARKINGS - PAINTED ISLANDS
1205.14	PAVEMENT MARKINGS - ROUNDABOUTS
1264.01	OBJECT MARKERS - TYPES
1264.02	OBJECT MARKERS - INSTALLATION

PAVEMENT MARKING SCHEDULE

SYMBOL	DESCRIPTION
	FINAL PAVEMENT MARKINGS
	THERMOPLASTIC (4", 90 MILS)
TA	WHITE EDGELINE
TB	YELLOW EDGELINE
TI	YELLOW DOUBLE CENTER
	THERMOPLASTIC (8", 90 MILS)
TN	WHITE GORELINE
TP	YELLOW DIAGONAL
	THERMOPLASTIC (4", 90 MILS)
TD	3 FT. - 9 FT./SP WHITE MINISKIP
	THERMOPLASTIC (8", 90 MILS)
T17	3 FT. - 3 FT. ISP WHITE MINISKIP
	THERMOPLASTIC PAVEMENT MARKING SYMBOLS (90 MILS)
UB	RIGHT TURN ARROW
UC	STRAIGHT ARROW
UD	COMBO. LEFT/STRAIGHT ARROW
UN	24" YIELD LINE TRIANGLE
UW	FISH-HOOK RIGHT/STRAIGHT ARROW
YA	FISH-HOOK W/ CIRCLE LEFT ARROW
YB	FISH-HOOK W/ CIRCLE LEFT/STRAIGHT ARROW
YC	FISH-HOOK W/ CIRCLE LEFT/RIGHT/ STRAIGHT ARROW

GENERAL NOTES

THE FOLLOWING GENERAL NOTES APPLY AT ALL TIMES FOR THE DURATION OF THE CONSTRUCTION PROJECT, EXCEPT WHEN OTHERWISE NOTED IN THE PLAN, OR DIRECTED BY THE ENGINEER.

A) INSTALL PAVEMENT MARKINGS ON THE FINAL SURFACE AS FOLLOWS:

ROAD NAME	MARKING	MARKER
-L-	THERMOPLASTIC	NONE
-Y1-	THERMOPLASTIC	NONE
-Y2-	THERMOPLASTIC	NONE

B) TIE PROPOSED PAVEMENT MARKING LINES TO EXISTING PAVEMENT MARKING LINES.

C) REMOVE/REPLACE ANY CONFLICTING/DAMAGED PAVEMENT MARKINGS AND MARKERS.

D) PASSING ZONES WILL BE DETERMINED IN THE FIELD AND MUST BE APPROVED BY THE ENGINEER.

E) UNLESS OTHERWISE SPECIFIED, HEATED-IN-PLACE THERMOPLASTIC MAY BE USED IN LIEU OF EXTRUDED THERMOPLASTIC FOR ARROWS, STOP BARS, SYMBOLS, CHARACTERS AND DIAGONALS. IF HEATED-IN-PLACE IS USED, IT SHALL BE PAID FOR USING THE EXTRUDED THERMOPLASTIC PAY ITEM.

PLAN REVIEWED BY: N.C.D.O.T. SIGNING AND DELINEATION UNIT

_____ SIGNING & DELINEATION REGIONAL ENGINEER

_____ SIGNING & DELINEATION PROJECT DESIGN ENGINEER

DIVISION OF HIGHWAYS · STATE OF NORTH CAROLINA · DEPARTMENT OF TRANSPORTATION · WORK ZONE TRAFFIC CONTROL UNIT

PLAN PREPARED BY: Kimley–Horn and Associates

FRANK MASTERSON, P.E. PROJECT DESIGN ENGINEER

ANDREW WEEKS, E.I. DESIGNER

Kimley»Horn

$FILE1$

2/25/2020

THERMOPLASTIC PAVEMENT MARKING LINES

TA - THERMOPLASTIC (4", 90 MILS)	WHITE EDGE LINE
TB - THERMOPLASTIC (4", 90 MIL)	YELLOW EDGELINE
TD - THERMOPLASTIC (4", 90 MILS)	3 FT. - 9 FT./SP WHITE MINISKIP
TI - THERMOPLASTIC (4", 90 MILS)	YELLOW DOUBLE CENTER LINE
TN - THERMOPLASTIC (8", 90 MILS)	WHITE GORELINE
TP - THERMOPLASTIC (8", 90 MILS)	YELLOW DIAGONAL
T17 - THERMOPLASTIC (8", 90 MILS)	3 FT. - 3 FT./SP WHITE MINISKIP

PAVEMENT MARKING SYMBOLS

UB - THERMOPLASTIC (90 MILS)	RIGHT TURN ARROW
UC - THERMOPLASTIC (90 MILS)	STRAIGHT ARROW
UD - THERMOPLASTIC (90 MILS)	COMBO. LEFT/STRAIGHT ARROW
UI - THERMOPLASTIC (90 MILS)	ALPHANUMERIC CHAR.
UN - THERMOPLASTIC (90 MILS)	24" YIELD LINE TRIANGLE
UW - THERMOPLASTIC (90 MILS)	FISH-HOOK RIGHT/STRAIGHT ARROW
YA - THERMOPLASTIC (90 MILS)	FISH-HOOK W/CIRCLE LEFT ARROW
YB - THERMOPLASTIC (90 MILS)	FISH-HOOK W/CIRCLE LEFT/STRAIGHT ARROW
YC - THERMOPLASTIC (90 MILS)	FISH-HOOK W/CIRCLE LEFT/RIGHT/STRAIGHT ARROW

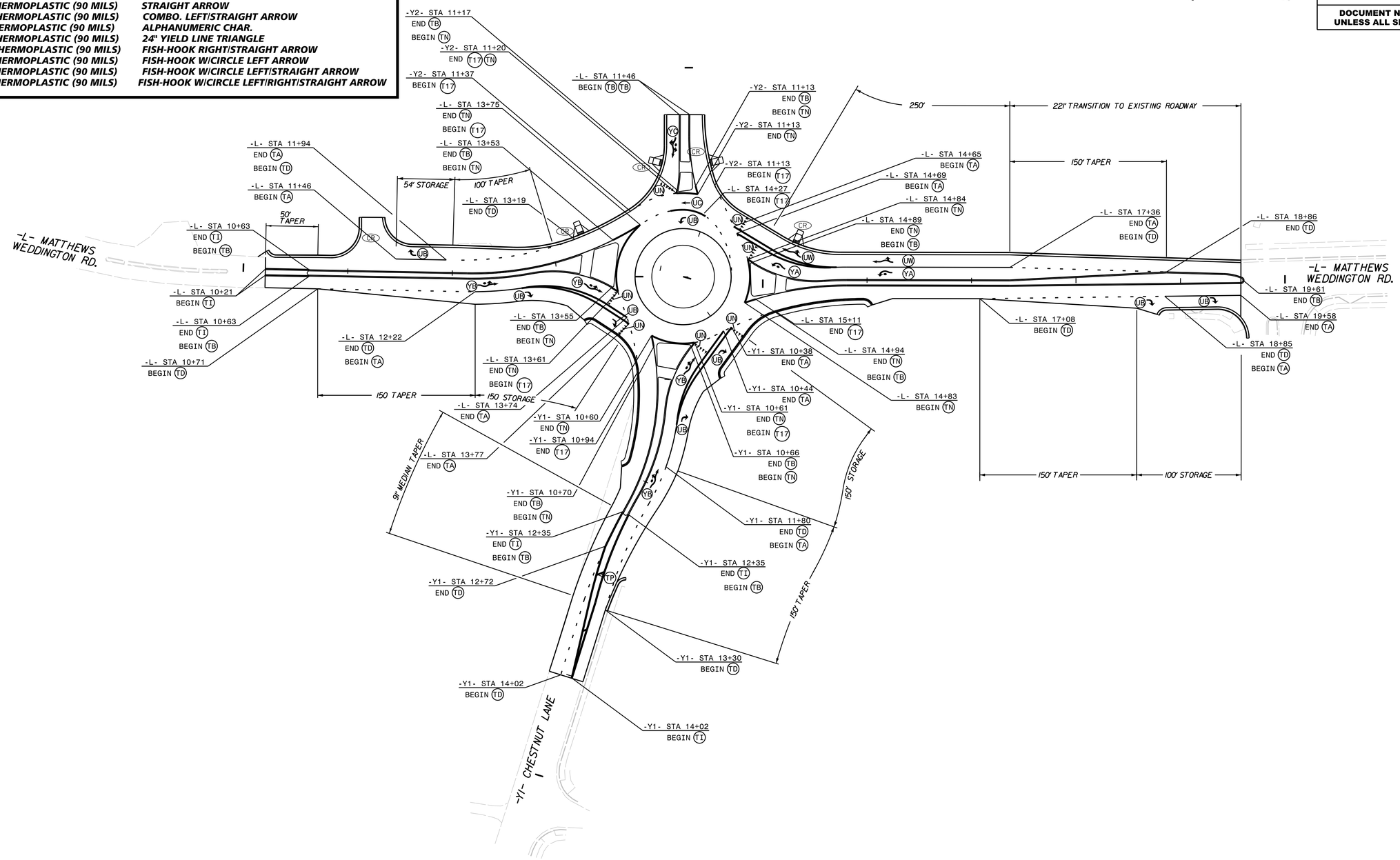

Kimley»Horn ©2020
200 S. TRYON ST. • CHARLOTTE, NC 28202

RIGHT-OF-WAY REV.

CONST. REV.

NAD 83 NC GRID NA 2011

PROJECT REFERENCE NO.	SHEET NO.
U-6091	PMP-2

SEAL

NORTH CAROLINA PROFESSIONAL SEAL 037923 ENGINEER DAVID MASTERSON, JR.
DocuSigned by: 6DF8F8B7B4B7B4...
2/25/2020

DOCUMENT NOT CONSIDERED FINAL UNLESS ALL SIGNATURES COMPLETED

REVISIONS

2/25/2020 K:\CHL_PRJ\01\036445 - U-6091 (Chestnut Rdbt)\Traffic\Signing\CADD\Sign Designs\U-6091_pmp_02.dgn

T.I.P.: U-6091

CONTRACT: DJ00364

K:\CHL_PRJ\DI\036445 - U-6091(Chestnut Rd)\Traffic\Signing\CADD\Sign Designs\U-6091_rdy_sgn_1sht.dgn

2/25/2020

STATE OF NORTH CAROLINA
DEPARTMENT OF TRANSPORTATION

TIP NO.	SHEET NO.
U-6091	SIGN-1

APPROVED: _____

DATE: _____

SEAL

NORTH CAROLINA PROFESSIONAL SEAL 037923 ENGINEER FRANK D. MASTERSON, JR.

2/25/2020

DOCUMENT NOT CONSIDERED FINAL UNLESS ALL SIGNATURES COMPLETED

SIGNING PLAN
UNION COUNTY

LOCATION: INTERSECTION OF MATTHEWS WEDDINGTON ROAD (SR 1345) AND CHESTNUT LANE (SR 1362)

ROADWAY STANDARD DRAWING

THE FOLLOWING ROADWAY STANDARDS AS APPEAR IN "ROADWAY STANDARD DRAWINGS" - PROJECT SERVICES UNIT - N.C. DEPARTMENT OF TRANSPORTATION - RALEIGH, N.C., DATED JANUARY 2012 ARE APPLICABLE TO THIS PROJECT AND BY REFERENCE HEREBY ARE CONSIDERED A PART OF THESE PLANS:

STD. NO.	TITLE
904.10	ORIENTATION OF GROUND MOUNTED SIGNS
904.20	SECONDARY SIGN MOUNTING
904.30	SUPPLEMENTAL SIGN MOUNTING
904.50	MOUNTING OF TYPE 'D', 'E' AND 'F' SIGNS ON 'U' CHANNEL POSTS
910.40	SINGLE AND TWO LANE ROUNDABOUT SIGNING WITH PEDESTRIANS

SUMMARY OF QUANTITIES

ITEM NO.		ITEM DESCRIPTION	QUANTITY	UNIT
DESC. NO.	SECT. NO.			
4025000000	901	CONTRACTOR FURNISHED, TYPE D SIGN	12	S.F.
4025000000	901	CONTRACTOR FURNISHED, TYPE E SIGN	128	S.F.
4072000000	903	SUPPORTS, 3 LB STEEL U-CHANNEL	312	L.F.
4108000000	904	SIGN ERECTION, TYPE E	22	EA.
4116100000	904	SIGN ERECTION, RELOCATE TYPE E (GROUND MOUNTED)	1	EA.
4155000000	907	DISPOSAL OF SIGN SYSTEM, U-CHANNEL	2	EA.
4192000000	907	DISPOSAL OF SUPPORT, U-CHANNEL	1	EA.

GENERAL NOTES

- SIGNS FURNISHED BY CONTRACTOR.
- IF REMOVAL OR RELOCATION OF SIGNS ON PRIVATE STREET (NON-STATE MAINTAINED) IS REQUIRED DUE TO CONSTRUCTION, THE CONTRACTOR SHALL INFORM THE ENGINEER. THE WORK WILL BE COMPLETED BY OTHERS.
- ALL TYPE 'D' SIGNS SHALL BE MOUNTED BELOW TYPE 'E' SIGNS AS DIRECTED AND ON ONE U-CHANNEL POST UNLESS OTHERWISE INDICATED ON THE PLANS.
- WHEN NOT STATIONED OR DIMENSIONED ON PLANS, ALL 'E' AND 'F' SIGNS SHALL BE FIELD LOCATED BY THE ENGINEER.
- ALL EXISTING SIGNS ON "U" CHANNEL POSTS WITHIN THE PROJECT SHALL BE REMOVED AND DISPOSED OF UNLESS OTHERWISE NOTED ON PLANS.
- WHEN EXISTING SIGNS ARE REMOVED AND INSTALLED ON NEW SUPPORTS, THE RE-ERECTION SHALL IMMEDIATELY FOLLOW THE REMOVAL.
- THE BACKGROUND FOR TYPE E & F SIGNS SHALL BE TYPE C REFLECTIVE SHEETING.
- ALL PROPOSED SIGNS SEE PROJECT NOTE 3 UNLESS OTHERWISE NOTED ON PLAN SHEETS.

INDEX

SHEET NO.	DESCRIPTION
SIGN-1	TITLE SHEET
SIGN-2	D SHEET
SIGN-2A	E SHEET
SIGN-3	SIGNING PLAN SHEET

PLAN PREPARED BY: KIMLEY-HORN AND ASSOCIATES, INC.

FRANK MASTERSON, P.E. — PROJECT DESIGN ENGINEER

BRANDON MURR, EIT — DESIGNER

Kimley»Horn

TIP NO.	SHEET NO.
U-6091	SIGN-2

SEAL

NORTH CAROLINA PROFESSIONAL SEAL 037923 ENGINEER FRANCIS O. MASTERSON, JR.

DOCUSIGNED BY:

2/25/2020

DOCUMENT NOT CONSIDERED FINAL UNLESS ALL SIGNATURES COMPLETED

SIGN NUMBER: 407
TYPE: D
QUANTITY: 2
SIGN WIDTH: 2'-0"
HEIGHT: 1'-0"
TOTAL AREA: 2.0 Sq.Ft.
BORDER TYPE: FLUSH
RECESS: 0"
WIDTH: 0.5"
RADII: 1.5"
NO. Z BARS:
LENGTH:

BACKG COLOR: Green
COPY COLOR: White

SYMBOL	X	Y	WID	HT

MAT'L: 0.125" (3.2 mm) ALUMINUM

DESIGN BY: A. WEEKS
PROJECT ID: U-6091
CHECKED BY: F. MASTERSON
LOCATION: UNION COUNTY
Feb 11, 2020
DIV: 10

USE NOTES:

1. Legend and border(except those that are colored black) shall be direct applied Grade C sheeting.
2. Background shall be Grade A, B, or C reflective sheeting.
3. Shields; A, B, and C type arrows shall be on 0.032" (0.8mm) aluminum with Grade C reflective sheeting and demountable.
4. Bottom panel shall be yellow Grade C sheeting. Legend shall be direct applied black non-reflective sheeting. Arrow shall be on 0.032" aluminum, black non-reflective sheeting an demountable. Yellow panel is:

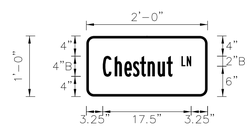

Spacing Factor is 1 unless specified otherwise

LETTER POSITIONS

Letter spacings are to start of next letter

																												Series/Size Text Length
		L	N																									B 2000
	18.8	1	0.9	3.3																								1.9
		C	h	e	s	t	n	u	t																			B 2000
	3.3	2.4	1.9	1.7	1.4	1.5	2	1.8	1.2	6.9																		13.8

FILENAME: U-6091_sgn_tmp_GS

NORTH CAROLINA D.O.T. SIGN DETAIL

SIGN NUMBER: 408
TYPE: D
QUANTITY: 2
SIGN WIDTH: 4'-0"
HEIGHT: 1'-0"
TOTAL AREA: 4.0 Sq.Ft.
BORDER TYPE: FLUSH
RECESS: 0"
WIDTH: 0.5"
RADII: 1.5"
NO. Z BARS:
LENGTH:

BACKG COLOR: Green
COPY COLOR: White

SYMBOL	X	Y	WID	HT

MAT'L: 0.125" (3.2 mm) ALUMINUM

DESIGN BY: A. WEEKS
PROJECT ID: U-6091
CHECKED BY: F. MASTERSON
LOCATION: UNION COUNTY
Feb 11, 2020
DIV: 10

USE NOTES:

1. Legend and border(except those that are colored black) shall be direct applied Grade C sheeting.
2. Background shall be Grade A, B, or C reflective sheeting.
3. Shields; A, B, and C type arrows shall be on 0.032" (0.8mm) aluminum with Grade C reflective sheeting and demountable.
4. Bottom panel shall be yellow Grade C sheeting. Legend shall be direct applied black non-reflective sheeting. Arrow shall be on 0.032" aluminum, black non-reflective sheeting an demountable. Yellow panel is:

Spacing Factor is 1 unless specified otherwise

LETTER POSITIONS

Letter spacings are to start of next letter

																												Series/Size Text Length
		R	D																									B 2000
	42.6	1.2	0.9	3.4																								2
		M	o	t	t	h	e	w	s		W	e	d	d	i	n	g	t	o	n								B 2000
	3.4	2.5	1.8	1.2	1.5	1.9	1.7	2.4	1.3	4	2.9	1.8	2	2.1	1.2	1.9	1.8	1.4	2	1.4	7.8							36.8

FILENAME: U-6091_sgn_tmp_GS

NORTH CAROLINA D.O.T. SIGN DETAIL

Kimley»Horn

TYPE "D" SIGNS

K:\CHL_PRJ\013\036445 - U-6091 (Chestnut Rd)\Traffic\Signing\CADD\Sign Designs\U-6091_rdy_sgn_psh2.dgn
2/25/2020

TIP NO.	SHEET NO.
U-6091	SIGN-2A

SEAL

NORTH CAROLINA PROFESSIONAL SEAL 037923 ENGINEER F. MASTERSON, JR.

DocuSigned by:
DSF8D9A7E7A7A4...

2/25/2020

DOCUMENT NOT CONSIDERED FINAL UNLESS ALL SIGNATURES COMPLETED

401 QUANTITY REQ'D _4_	402 QUANTITY REQ'D _8_	403 QUANTITY REQ'D _4_	404 QUANTITY REQ'D _3_	405 QUANTITY REQ'D _1_	406 QUANTITY REQ'D _2_
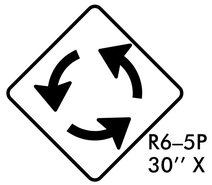 R6-5P 30'' X 30''	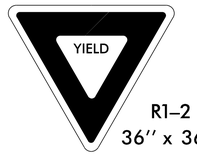 R1-2 36'' x 36'' x 36"	R6-4A 48'' x 24"	R4-7 24" X 30"	R3-8 36" X 36"	R3-8 36" X 36"
ONE "U" POST PER SIGN	ONE "U" POST PER SIGN	TWO "U" POSTS PER SIGN	ONE "U" POST PER SIGN	ONE "U" POST PER SIGN	ONE "U" POST PER SIGN

Kimley»Horn

TYPE "E" SIGNS

K:\CHL_PRJ\0I036445 - U-6091(Chestnut Rdb)\Traffic\Signing\CADD\Sign Designs\U-6091_rdy_sgn_psh2.dgn
2/25/2020

Kimley»Horn
©2019
200 S. TRYON ST. • CHARLOTTE, NC 28202

PROJECT REFERENCE NO.	SHEET NO.
U-6091	SIGN-3

SEAL

NORTH CAROLINA PROFESSIONAL SEAL 037923 ENGINEER FRANCIS LAWRENCE MASTERSON, JR.

Documents signed by: Francis Lawrence Masterson, Jr.
DOF 6/26/2020

2/25/2020

DOCUMENT NOT CONSIDERED FINAL UNLESS ALL SIGNATURES COMPLETED

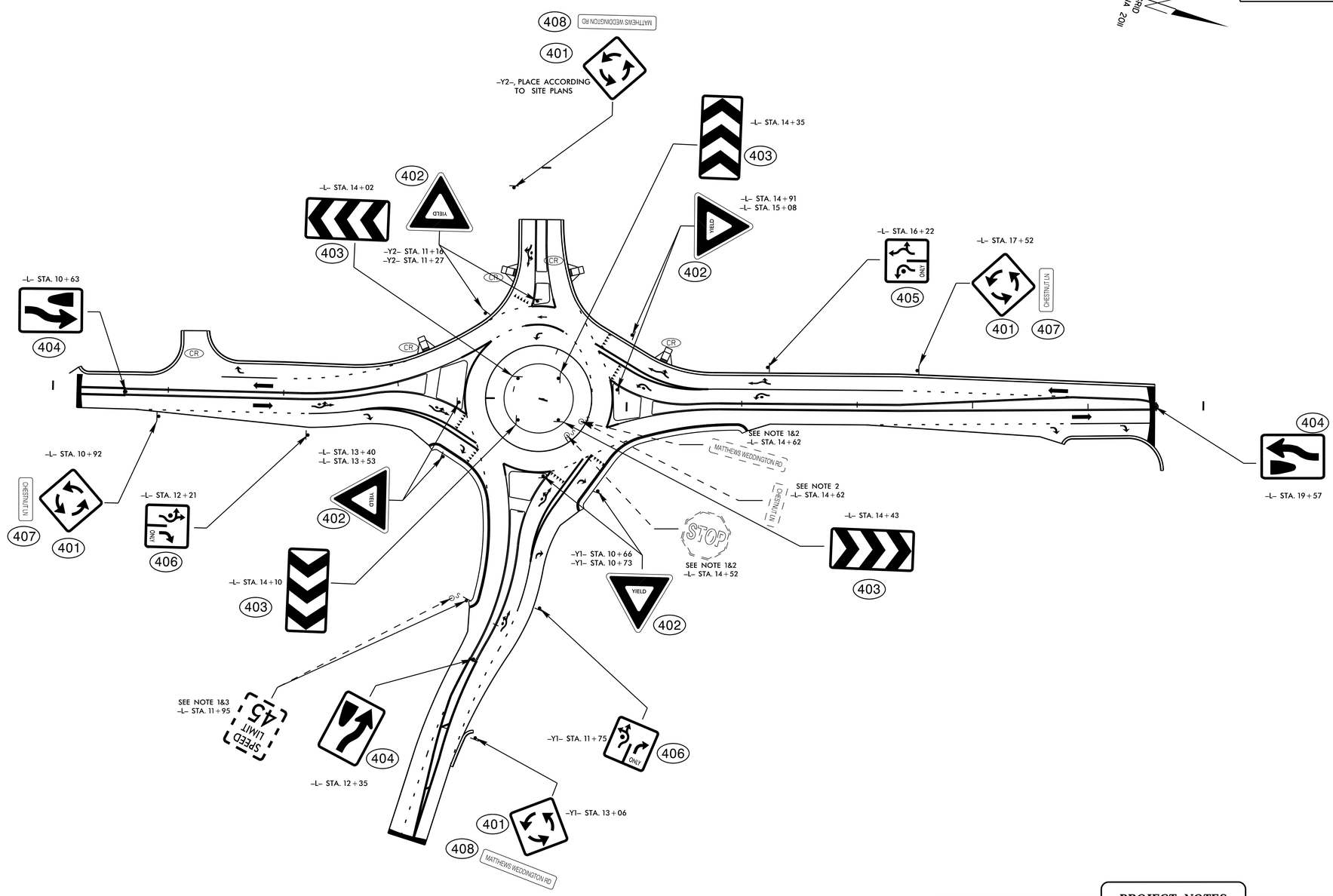

PROJECT NOTES

1. REMOVE AND DISPOSE OF EXISTING, "U"CHANNEL POST
2. DISPOSAL OF SIGN, D, E, F
3. ERECT EXISTING SIGN ON STEEL "U"CHANNEL
4. DISPOSAL OF SIGN SYSTEM "U" CHANNEL

$FILE1$

2/25/2020

DocuSign Envelope ID: A545D44E-2C75-4983-AA21-998C2997308D

TIP PROJECT: U-6091

CONTRACT: DJ00364

PROJECT REFERENCE NO.	SHEET NO.
011036445	UC-1

DOCUMENT NOT CONSIDERED FINAL UNLESS ALL SIGNATURES COMPLETED

STATE OF NORTH CAROLINA
DIVISION OF HIGHWAYS

UNION COUNTY

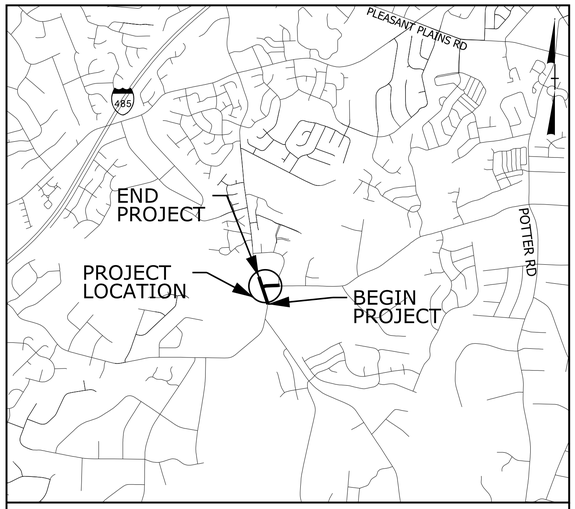

VICINITY MAP NOT TO SCALE

LOCATION: ***INTERSECTION OF MATTHEWS WEDDINGTON ROAD (SR 1345) AND CHESTNUT LANE (SR 1362)***

TYPE OF WORK: ***WATER MAIN RELOCATIONS***

*NOTE TO CONTRACTOR: ALL WATER MAINS SHALL BE RESTRAINED JOINT DI PIPE.

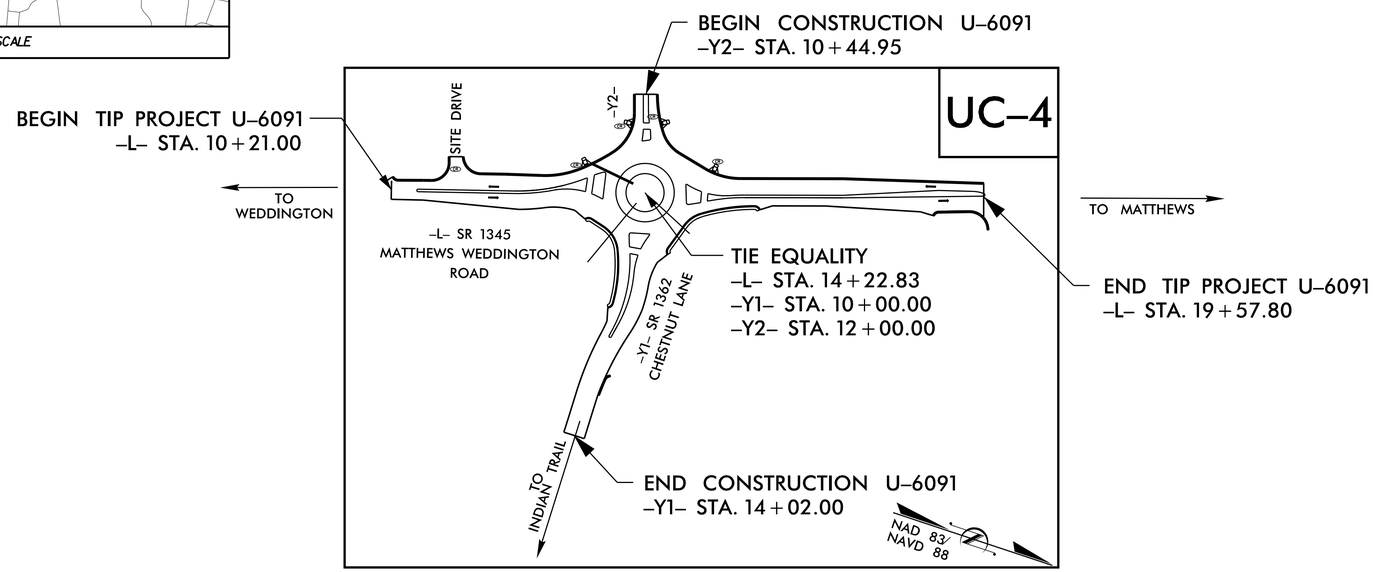

CONTACT INFORMATION

OWNER:	MICHAEL CALDWELL, P.E. (704) 296-4293 MICHAEL.CALDWELL@UNIONCOUNTYNC.GOV
PROJECT ENGINEER:	DANIEL BULA, P.E. (704) 409-1805 DAN.BULA@KIMLEY-HORN.COM 200 SOUTH TRYON STREET, SUITE 200 CHARLOTTE, NORTH CAROLINA 28202

THIS PROJECT IS WITHIN THE MUNICIPAL BOUNDARIES OF THE TOWN OF STALLINGS

DOCUMENT NOT CONSIDERED FINAL UNLESS ALL SIGNATURES COMPLETED

GRAPHIC SCALES

50 25 0 50 100
PLANS

50 25 0 50 100
PROFILE (HORIZONTAL)

10 5 0 10 20
PROFILE (VERTICAL)

INDEX OF SHEETS

SHEET NO.:	DESCRIPTION:
UC-1	TITLE SHEET
UC-2	NCDOT SYMBOLOGY
UC-3	GENERAL NOTES
UC-3A THRU UC-3D	STANDARD DETAILS
UC-4	UTILITY CONSTRUCTION PLAN
UC-5	UTILITY CONSTRUCTION PROFILE

UTILITY OWNERS

WATER - UNION COUNTY
SEWER - UNION COUNTY

PLANS PREPARED FOR THE NCDOT BY:

Kimley»Horn ©2019
NC LICENSE #F-0102
200 SOUTH TRYON STREET, SUITE 200
CHARLOTTE, NORTH CAROLINA 28202
PHONE: (704) 333-5131

2018 STANDARD SPECIFICATIONS

DANIEL G. BULA, P.E.
CONSULTANT CONTACT #1

MATTHEW A. SHOESMITH, P.E.
CONSULTANT CONTACT #2

SEAN EPPERSON, P.E.
NCDOT CONTACT

SEAL

NORTH CAROLINA PROFESSIONAL SEAL ENGINEER DANIEL G. BULA
Docusigned by: Daniel G. Bula
DBD7A41C1E0A4F5...
2/10/2020

STATE OF NORTH CAROLINA DEPARTMENT OF TRANSPORTATION

$$$$$SYSTIME$$$$$
$$$$USERNAME$$$$

DocuSign Envelope ID: 559CD4B3-945C-4C29-A786-61AA33C30DE3

PROJECT REFERENCE NO.	SHEET NO.
U-6091	UC-2

DOCUMENT NOT CONSIDERED FINAL UNLESS ALL SIGNATURES COMPLETED

STATE OF NORTH CAROLINA, DIVISION OF HIGHWAYS

CONVENTIONAL PLAN SHEET SYMBOLS

Note: Not to Scale **S.U.E. = Subsurface Utility Engineering*

REVISIONS

BOUNDARIES AND PROPERTY:

- State Line
- County Line
- Township Line
- City Line
- Reservation Line
- Property Line
- Existing Iron Pin — EIP
- Property Corner
- Property Monument — ECM
- Parcel/Sequence Number — 123
- Existing Fence Line
- Proposed Woven Wire Fence
- Proposed Chain Link Fence
- Proposed Barbed Wire Fence
- Existing Wetland Boundary — WLB
- Proposed Wetland Boundary — WLB
- Existing Endangered Animal Boundary — EAB
- Existing Endangered Plant Boundary — EPB
- Existing Historic Property Boundary — HPB
- Known Contamination Area: Soil
- Potential Contamination Area: Soil
- Known Contamination Area: Water
- Potential Contamination Area: Water
- Contaminated Site: Known or Potential

BUILDINGS AND OTHER CULTURE:

- Gas Pump Vent or U/G Tank Cap
- Sign — S
- Well — W
- Small Mine
- Foundation
- Area Outline
- Cemetery
- Building
- School
- Church
- Dam

HYDROLOGY:

- Stream or Body of Water
- Hydro, Pool or Reservoir
- Jurisdictional Stream — JS
- Buffer Zone 1 — BZ 1
- Buffer Zone 2 — BZ 2
- Flow Arrow
- Disappearing Stream
- Spring
- Wetland
- Proposed Lateral, Tail, Head Ditch — FLOW
- False Sump

RAILROADS:

- Standard Gauge — CSX TRANSPORTATION
- RR Signal Milepost — MILEPOST 35
- Switch — SWITCH
- RR Abandoned
- RR Dismantled

RIGHT OF WAY:

- Baseline Control Point
- Existing Right of Way Marker
- Existing Right of Way Line
- Proposed Right of Way Line — RW
- Proposed Right of Way Line with Iron Pin and Cap Marker — RW
- Proposed Right of Way Line with Concrete or Granite R/W Marker — RW
- Proposed Control of Access Line with Concrete C/A Marker — CA
- Existing Control of Access — CA
- Proposed Control of Access — CA
- Existing Easement Line — E
- Proposed Temporary Construction Easement — E
- Proposed Temporary Drainage Easement — TDE
- Proposed Permanent Drainage Easement — PDE
- Proposed Permanent Drainage / Utility Easement — DUE
- Proposed Permanent Utility Easement — PUE
- Proposed Temporary Utility Easement — TUE
- Proposed Aerial Utility Easement — AUE
- Proposed Permanent Easement with Iron Pin and Cap Marker

ROADS AND RELATED FEATURES:

- Existing Edge of Pavement
- Existing Curb
- Proposed Slope Stakes Cut — C
- Proposed Slope Stakes Fill — F
- Proposed Curb Ramp — CR
- Existing Metal Guardrail
- Proposed Guardrail
- Existing Cable Guiderail
- Proposed Cable Guiderail
- Equality Symbol
- Pavement Removal

VEGETATION:

- Single Tree
- Single Shrub
- Hedge
- Woods Line
- Orchard
- Vineyard — Vineyard

EXISTING STRUCTURES:

MAJOR:

- Bridge, Tunnel or Box Culvert — CONC
- Bridge Wing Wall, Head Wall and End Wall — CONC WW

MINOR:

- Head and End Wall — CONC HW
- Pipe Culvert
- Footbridge
- Drainage Box: Catch Basin, DI or JB — CB
- Paved Ditch Gutter
- Storm Sewer Manhole — S
- Storm Sewer — S

UTILITIES:

POWER:

- Existing Power Pole
- Proposed Power Pole
- Existing Joint Use Pole
- Proposed Joint Use Pole
- Power Manhole — P
- Power Line Tower
- Power Transformer
- U/G Power Cable Hand Hole
- H-Frame Pole
- U/G Power Line LOS B (S.U.E.*) — P
- U/G Power Line LOS C (S.U.E.*) — P
- U/G Power Line LOS D (S.U.E.*) — P

TELEPHONE:

- Existing Telephone Pole
- Proposed Telephone Pole
- Telephone Manhole — T
- Telephone Pedestal — T
- Telephone Cell Tower
- U/G Telephone Cable Hand Hole
- U/G Telephone Cable LOS B (S.U.E.*) — T
- U/G Telephone Cable LOS C (S.U.E.*) — T
- U/G Telephone Cable LOS D (S.U.E.*) — T
- U/G Telephone Conduit LOS B (S.U.E.*) — TC
- U/G Telephone Conduit LOS C (S.U.E.*) — TC
- U/G Telephone Conduit LOS D (S.U.E.*) — TC
- U/G Fiber Optics Cable LOS B (S.U.E.*) — T FO
- U/G Fiber Optics Cable LOS C (S.U.E.*) — T FO
- U/G Fiber Optics Cable LOS D (S.U.E.*) — T FO

WATER:

- Water Manhole — W
- Water Meter
- Water Valve
- Water Hydrant
- U/G Water Line LOS B (S.U.E*) — W
- U/G Water Line LOS C (S.U.E*) — W
- U/G Water Line LOS D (S.U.E*) — W
- Above Ground Water Line — A/G Water

TV:

- TV Pedestal — C
- TV Tower
- U/G TV Cable Hand Hole — HH
- U/G TV Cable LOS B (S.U.E.*) — TV
- U/G TV Cable LOS C (S.U.E.*) — TV
- U/G TV Cable LOS D (S.U.E.*) — TV
- U/G Fiber Optic Cable LOS B (S.U.E.*) — TV FO
- U/G Fiber Optic Cable LOS C (S.U.E.*) — TV FO
- U/G Fiber Optic Cable LOS D (S.U.E.*) — TV FO

GAS:

- Gas Valve
- Gas Meter
- U/G Gas Line LOS B (S.U.E.*) — G
- U/G Gas Line LOS C (S.U.E.*) — G
- U/G Gas Line LOS D (S.U.E.*) — G
- Above Ground Gas Line — A/G Gas

SANITARY SEWER:

- Sanitary Sewer Manhole
- Sanitary Sewer Cleanout
- U/G Sanitary Sewer Line — SS
- Above Ground Sanitary Sewer — A/G Sanitary Sewer
- SS Forced Main Line LOS B (S.U.E.*) — FSS
- SS Forced Main Line LOS C (S.U.E.*) — FSS
- SS Forced Main Line LOS D (S.U.E.*) — FSS

MISCELLANEOUS:

- Utility Pole
- Utility Pole with Base
- Utility Located Object
- Utility Traffic Signal Box — S
- Utility Unknown U/G Line LOS B (S.U.E.*) — ?UTL
- U/G Tank; Water, Gas, Oil
- Underground Storage Tank, Approx. Loc. — UST
- A/G Tank; Water, Gas, Oil
- Geoenvironmental Boring
- U/G Test Hole LOS A (S.U.E.*)
- Abandoned According to Utility Records — AATUR
- End of Information — E.O.I.

DocuSign Envelope ID: 2ACF26EC-06DA-48F3-B72A-1CC448160E37

5/14/99

REVISIONS

Kimley»Horn
200 SOUTH TRYON ST, SUITE 200
CHARLOTTE, N.C. 28202
©2019

PROJECT REFERENCE NO.	SHEET NO.
U-6091	UC-3
DESIGNED BY: DGB	
DRAWN BY: DGB	
CHECKED BY: MAS	
APPROVED BY: ---	
REVISED:	
NORTH CAROLINA DEPARTMENT OF TRANSPORTATION	
UTILITIES ENGINEERING SEC. PHONE:(919)707-6690 FAX:(919)250-4151	UTILITY CONSTRUCTION PLANS ONLY

NORTH CAROLINA PROFESSIONAL SEAL 046861 ENGINEER DANIEL G. BULA
DocuSigned by: Daniel G. Bula
2/18/2020

UTILITY CONSTRUCTION

STANDARD NCDOT NOTES:

1. ALL PROPOSED UTILITY CONSTRUCTION SHALL MEET THE APPLICABLE REQUIREMENTS OF THE NC DEPARTMENT OF TRANSPORTATION'S "STANDARD SPECIFICATIONS FOR ROADS AND STRUCTURES" DATED JANUARY 2018.

2. THE EXISTING WATER AND SEWER UTILITIES BELONG TO UNION COUNTY.

3. ALL WATER LINES SHALL BE INSTALLED IN COMPLIANCE WITH THE RULES AND REGULATIONS OF THE NORTH CAROLINA DEPARTMENT OF ENVIRONMENTAL QUALITY,DIVISION OF WATER RESOURCES,PUBLIC WATER SUPPLY SECTION.ALL SEWER LINES SHALL BE INSTALLED IN COMPLIANCE WITH THE RULES AND REGULATIONS OF THE NORTH CAROLINA DEPARTMENT OF ENVIRONMENTAL QUALITY,DIVISION OF WATER RESOURCES,WATER QUALITY SECTION.PERFORM ALL WORK IN ACCORDANCE WITH THE APPLICABLE PLUMBING CODES.

4. THE UTILITY OWNER OWNS THE EXISTING UTILITY FACILITIES AND WILL OWN THE NEW UTILITY FACILITIES AFTER ACCEPTANCE BY THE DEPARTMENT.THE DEPARTMENT OWNS THE CONSTRUCTION CONTRACT AND HAS ADMINISTRATIVE AUTHORITY.COMMUNICATIONS AND DECISIONS BETWEEN THE CONTRACTOR AND UTILITY OWNER ARE NOT BINDING UPON THE DEPARTMENT OR THIS CONTRACT UNLESS AUTHORIZED BY THE ENGINEER.AGREEMENTS BETWEEN THE UTILITY OWNER AND CONTRACTOR FOR THE WORK THAT IS NOT PART OF THIS CONTRACT OR IS SECONDARY TO THIS CONTRACT ARE ALLOWED,BUT ARE NOT BINDING UPON THE DEPARTMENT.

5. THE CONTRACTOR SHALL:
   - PROVIDE ACCESS FOR THE DEPARTMENT PERSONNEL AND THE OWNER'S REPRESENTATIVES TO ALL PHASES OF CONSTRUCTION.
   - NOTIFY THE DEPARTMENT PERSONNEL AND THE UTILITY OWNER TWO WEEKS PRIOR TO COMMENCEMENT OF ANY WORK AND ONE WEEK PRIOR TO SERVICE INTERRUPTION.
   - KEEP UTILITY OWNERS' REPRESENTATIVES INFORMED OF WORK PROGRESS AND PROVIDE OPPORTUNITY FOR INSPECTION OF CONSTRUCTION AND TESTING.

6. THE PLANS DEPICT THE BEST AVAILABLE INFORMATION FOR THE LOCATION, SIZE,AND TYPE OF MATERIAL FOR ALL EXISTING UTILITIES.THE CONTRACTOR SHALL MAKE INVESTIGATIONS FOR DETERMING THE EXACT LOCATION,SIZE,AND MATERIAL OF EXISTING FACILITIES AS NECESSARY FOR THE CONSTRUCTION OF THE PROPOSED UTILITIES AND FOR AVOIDING DAMAGE TO EXISTING FACILITIES.REPAIR ANY DAMAGE INCURRED TO EXISTING FACILITIES TO THE ORIGINAL CONDITION OR BETTER AT NO ADDITIONAL COST TO THE DEPARTMENT.

7. THE CONTRACTOR SHALL MAKE FINAL CONNECTIONS OF THE NEW WORK TO THE EXISTING SYSTEM WHERE INDICATED ON THE PLANS,AS REQUIRED TO FIT THE ACTUAL CONDITIONS,OR AS DIRECTED.

8. THE CONTRACTOR SHALL MAKE CONNECTIONS BETWEEN EXISTING AND PROPOSED UTILITIES AT THE TIMES MOST CONVENIENT TO THE PUBLIC, WITHOUT ENDANGERING THE UTILITY SERVICE,AND IN ACCORDANCE WITH THE UTILITY OWNER'S REQUIREMENTS.MAKE CONNECTIONS ON WEEKENDS,AT NIGHT, AND ON HOLIDAYS IF NECESSARY.

9. ALL UTILITY MATERIALS SHALL BE APPROVED PRIOR TO DELIVERY TO THE PROJECT.SEE 1500-7."SUBMITTALS AND RECORDS" IN SECTION 1500 OF THE STANDARD SPECIFICATIONS.

GENERAL NOTES:

1. ELEVATIONS SHOWN ARE IN FEET ABOVE MEAN SEA LEVEL.

2. LOCATIONS OF EXISTING SHOWN UTILITIES ARE APPROXIMATE.CONTRACTOR SHALL BE RESPONSIBLE FOR FIELD VERIFYING EXACT LOCATION,ORIENTATION, AND ELEVATION OF EXISTING UTILITIES PRIOR TO EXCAVATION FOR THE FORCE MAIN.

3. CONTRACTOR SHALL NOTIFY THE ENGINEER IMMEDIATELY SHOULD ANY FIELD CONDITIONS BE ENCOUNTERED THAT VARY FROM THE INFORMATION PROVIDED IN THE CONTRACT DOCUMENTS.

4. BURIED TELEPHONE AND CATV CABLES (FIBER OPTICS AND CONVENTIONAL) ARE KNOWN TO VARY DUE TO INSTALLATION TECHNIQUES.THE CONTRACTOR SHALL BE FULLY RESPONSIBLE FOR COORDINATING WITH THE UTILITY COMPANY TO DETERMINE SPECIFIC CABLE LOCATIONS AND NOTIFYING THE ENGINEER OF THE EXACT ELEVATION OF THE CABLES.THE CONTRACTOR SHALL BE RESOPNSIBLE FOR ALL COSTS ASSOCIATED WITH LOCATING, RELOCTING,OR REPAIRING BURIED CABLES ALONG THE PROPOSED WATER LINE ROUTE.

5. CONTRACTOR SHALL FURNISH AND INSTALL ALL SHEETING REQUIRED FOR THE INSTALLATION OF THE WATER MAIN.ALL EXCAVATIONS SHALL BE KEPT WITHIN THE DESIGNATED EASEMENT AND/OR RIGHT-OF-WAY WIDTHS.SHEETING SHALL BE INSTALLED AS REQUIRED TO PROTECT EXISTING UTILITIES.

6. CONTRACTOR SHALL RESTORE GRADE TO PRE-CONSTRUCTION CONDITION UNLESS OTHERWISE NOTED ON THE DRAWINGS.

7. CONTRACTOR SHALL PROVIDE A MEANS TO KEEP ALL NEW PIPING ISOLATED FROM EXISTING PIPING UNTIL ALL NEW PIPING HAS BEEN PRESSURE TESTED, FLUSHED,AND ACCEPTED BY UNION COUNTY FOR SERVICE.

8. CONTRACTOR SHALL FIELD VERIFY EXACT LOCATION,ELEVATION,ORIENTATION, DIMENSIONS,MATERIALS,ETC.,OF EXISTING PIPE PRIOR TO ORDERING MATERIAL AND SHALL USE NECESSARY FITTINGS FOR THE CONNECTION.

9. CONTRACTOR SHALL RELOCATE EXISTING UNDERGROUND CABLES AS REQUIRED TO ACCOMMODATE INSTALLATION OF PROPOSED WATER MAIN.COST SHALL BE PAID BY THE CONTRACTOR.

10. CONTRACTOR SHALL BE RESPONSIBLE FOR COORDINATING WITH UNION COUNTY FOR ANY ADDITIONAL INFORMATION ON EXISTING WATER AND SEWER UTILITIES.

11. ALL PIPE SHALL HAVE RESTRAINED PIPE JOINT.IF A BEND OR FITTING IS RELOCATED BY THE CONTRACTOR FOR HIS CONVENIENCE THEN THE REQUIRED LENGTH OF RESTRAINED JOINTS SHALL BE MAINTAINED AT NO ADDITIONAL COST TO THE OWNER.IF ADDITIONAL BENDS OR FITTINGS ARE INSTALLED BY THE CONTRACTOR FOR HIS CONVENIENCE,THEN THE CONTRACTOR SHALL INSTALL THE REQUIRED LENGTH OF RESTRAINED JOINTS AS DETERMINED BY THE ENGINEER,AT NO ADDITIONAL COST TO THE OWNER.

12. ALL PRESSURIZED PIPE FITTINGS SHALL BE RESTRAINED JOINT.

13. WATER LINE ALIGNMENTS SHOWN ON THE DRAWINGS ARE BASED ON STANDARD FITTINGS AVAILABLE FOR DUCTILE IRON PIPE.JOINT DEFLECTIONS SHALL NOT EXCEED 75 PERCENT OF MANUFACTURER'S RECOMMENDED DEFLECTION.

14. ALL MANHOLE COVERS AND VALVE BOX LIDS FOR WATER LINE SHALL BE FURNISHED PER UNION COUNTY STANDARDS.

STANDARD UTILITY NOTES:

1. ALL MATERIALS & CONSTRUCTION METHODS SHALL BE IN ACCORDANCE WITH UNION COUNTY DESIGN STANDARDS,DETAILS & SPECIFICATIONS.

2. UTILITY SEPARATION REQUIREMENTS:
   A. A DISTANCE OF 100' SHALL BE MAINTAINED BETWEEN SANITARY SEWER & ANY PRIVATE OR PUBLIC WATER SUPPLY SOURCE SUCH AS AN IMPOUNDED RESERVOIR USED AS A SOURCE OF DRINKING WATER.IF ADEQUATE LATERAL SEPARATION CANNOT BE ACHIEVED,FERROUS SANITARY SEWER PIPE SHALL BE SPECIFIED & INSTALLED TO WATERLINE SPECIFICATIONS.HOWEVER,THE MINIMUM SEPARATION SHALL NOT BE LESS THAN 25' FROM A PRIVATE WELL OR 50' FROM A PUBLIC WELL.
   B. WHEN INSTALLING WATER &/OR SEWER MAINS,THE HORIZONTAL SEPARATION BETWEEN UTILITIES SHALL BE 10'.IF THIS SEPARATION CANNOT BE MAINTAINED DUE TO EXISTING CONDITIONS,THE VARIATION ALLOWED IS THE WATER MAIN IN A SEPARATE TRENCH WITH THE ELEVATION OF THE WATER MAIN AT LEAST 18" ABOVE THE TOP OF THE SEWER & MUST BE APPROVED BY THE PUBLIC UTILITIES DIRECTOR. ALL DISTANCES ARE MEASURED FROM OUTSIDE DIAMETER TO OUTSIDE DIAMETER.
   C. WHERE IT IS IMPOSSIBLE TO OBTAIN PROPER SEPARATION,OR ANYTIME A SANITARY SEWER PASSES OVER A WATERMAIN,DIP MATERIALS OR STEEL ENCASEMENT EXTENDED 10' ON EACH SIDE OF CROSSING MUST BE SPECIFIED & INSTALLED TO WATERLINE SPECIFICATIONS.
   D. 5.0' MINIMUM HORIZONTAL SEPARATION IS REQUIRED BETWEEN ALL SANITARY SEWER & STORM SEWER FACILITIES,UNLESS DIP MATERIAL IS SPECIFIED FOR SANITARY SEWER.
   E. MAINTAIN 18" MIN.VERTICAL SEPARATION AT ALL WATERMAIN & RCP STORM DRAIN CROSSINGS; MAINTAIN 24" MIN.VERTICAL SEPARATION AT ALL SANITARY SEWER & RCP STORM DRAIN CROSSINGS. WHERE ADEQUATE SEPARATIONS CANNOT BE ACHIEVED,SPECIFY DIP MATERIALS & A CONCRETE CRADLE HAVING 6" MIN.CLEARANCE (PER DETAIL KH4).
   F. ALL OTHER UNDERGROUND UTILITIES SHALL CROSS WATER & SEWER FACILITIES WITH 18" MIN.VERTICAL SEPARATION REQUIRED.

3. ANY NECESSARY FIELD REVISIONS ARE SUBJECT TO REVIEW & APPROVAL OF AN AMENDED PLAN &/OR PROFILE BY UNION COUNTY PRIOR TO CONSTRUCTION.

4. CONTRACTOR SHALL MAINTAIN CONTINUOUS WATER & SEWER SERVICE TO EXISTING RESIDENCES & BUSINESSES THROUGHOUT CONSTRUCTION OF PROJECT.ANY NECESSARY SERVICE INTERRUPTIONS SHALL BE PRECEDED BY A 72 HOUR ADVANCE NOTICE TO UNION COUNTY.

5. 3.0' MINIMUM COVER IS REQUIRED ON ALL WATER MAINS.

6. INSTALL WATER SERVICES WITH METERS LOCATED AT ROW.

7. NCDOT / RAILROAD ENCROACHMENT AGREEMENTS ARE REQUIRED FOR ANY UTILITY WORK (INCLUDING MAIN EXTENSIONS & SERVICE TAPS) WITHIN STATE OR RAILROAD ROW PRIOR TO CONSTRUCTION.

PROJECT SPECIFIC NOTES:

1. THE PROPOSED UTILITY CONSTRUCTION SHALL MEET THE APPLICABLE REQUIREMENTS OF UNION COUNTY PUBLIC WORKS' "SANITARY SEWER AND WATER SPECIFICATIONS" AND THE NC DEPARTMENT OF TRANSPORTATION'S "STANDARD SPECIFICATIONS FOR ROADS AND STRUCTURES" DATED JANUARY 2018.

2. ALL PROPOSED WATER LINES SHALL BE DUCTILE IRON PIPE PC350 RESTRAINED JOINT.

3. PRIOR TO PROCUREMENT OF MATERIALS,CONTRACTOR SHALL PERFORM "SOFT DIGS" TO VERIFY ACTUAL WATER LINE DEPTH AND MATERIAL AT PROPOSED TIE-IN LOCATIONS.

4. CONTRACTOR SHALL LAY PIPE STRAIGHT IN ALIGNMENT AND GRADIENT OR FOLLOW TRUE CURVES AS NEARLY AS PISSBLE.DO NOT DEFLECT ANY JOINT MORE THAN HALF THE MAXIMUM DEFLECTION RECOMMENDED BY THE MANUFACTURER.

5. CONTRACTOR SHALL ADHERE TO SECTION 1530 "ABANDON OR REMOVE UTILITIES" FOR ABANDONMENT OF EXISTING WATER LINES.

6. PRIOR TO BEGINNING PROJECT,CONTRACTOR SHALL CONTACT MICHAEL CALDWELL OF THE UNION COUNTY PUBLIC WORKS DEPARTMENT AT 704-296-4293.UNION COUNTY PUBLIC WORKS MAY INSPECT THE WORK AT ANY TIME.

7. CONTRACTOR SHALL BEGIN CONSTRUCTION WITH BORE AND JACK INSTALLATION AT -W1- STA 17+00.00.TO ACCOMODATE PROPOSED GAS MAIN CONSTRUCTION.

8. NO INTERUPPTION OF EXISTING WATER SERVICE SHALL BE MADE DURING CONSTRUCTION UNLESS AUTHORIZED BY UNION COUNTY PUBLIC WORKS DEPARTMENT.UNION COUNTY PUBLIC WORKS DEPARTMENT SHALL BE COPIED ON THE WATER MAIN PRESSURE TEST REPORT AND THE WATER MAIN CHLORINATION TEST REPORT.UNION COUNTY WILL WITNESS ALL PRESSURE TESTING.UNION COUNTY PUBLIC WORKS WILL COLLECT SAMPLES AND PERFORM BACTERIOLOGICAL TESTING.EACH SAMPLE COSTS $100.00,PAYABLE BY CHECK MADE OUT TO CATAWBA RIVER WATER PLANT.UNION COUNTY WILL NOT ACCEPT TEST RESULTS FROM OTHER TESTING LABS.

9. CONTRACTOR SHALL COORDINATE SHUTDOWN OF ALL WATER LINES A MINIMUM OF 72 HOURS IN ADVANCE WITH UNION COUNY PUBLIC WORKS DEPARTMENT (MICHAEL CALDWELL,704-296-4293).CONTRACTOR SHALL COMPLETE TIE-INS WITHIN A 6-HOUR WINDOW,AND MAY BE REQUIRED TO COMPLETE THESE TIE-INS AS NIGHT WORK.

10. ALL PROPOSED WATER LINES SHALL HAVE CLASS B BEDDING PER UNION COUNTY STANDARD DETAIL 8.

11. ALL WATER VALVES ARE TO BE OPERATED BY UNION COUNTY OPERATIONS STAFF ONLY.

12. WHEN ABANDONING WATER VALVES,CONTRACTOR SHALL CLOSE VALVE BEFORE REMOVING VALVE BOX.

13. A THRUST RESTRAINT DESIGN PRESSURE OF 200 PSI SHALL BE USED.

2/18/2020

DocuSign Envelope ID: 559CD4B3-945C-4C29-A786-61AA33C30DE3

5/14/99

REVISIONS

Kimley»Horn ©2019
200 SOUTH TRYON ST, SUITE 200
CHARLOTTE, N.C. 28202

PROJECT REFERENCE NO.	SHEET NO.
U-6091	UC-3A
DESIGNED BY: DGB	
DRAWN BY: DGB	
CHECKED BY: MAS	
APPROVED BY: ---	
REVISED:	
NORTH CAROLINA DEPARTMENT OF TRANSPORTATION	
UTILITIES ENGINEERING SEC. PHONE:(919)707-6690 FAX:(919)250-4151	UTILITY CONSTRUCTION PLANS ONLY

NORTH CAROLINA PROFESSIONAL SEAL 038391 ENGINEER DANIEL G. BULTA
DocuSigned by: Daniel G. Bulta
1/14/2020

UTILITY CONSTRUCTION

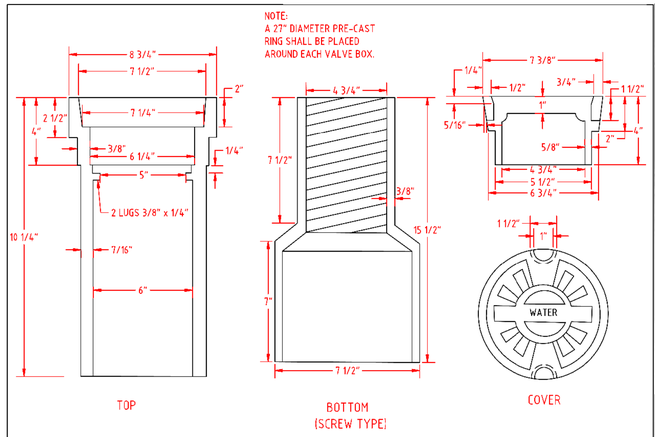

UNION COUNTY PUBLIC WORKS DEPARTMENT
UNION COUNTY, N.C.
STANDARD DETAIL
VALVE BOX
SCALE: N.T.S. DATE: 11-17-06
1

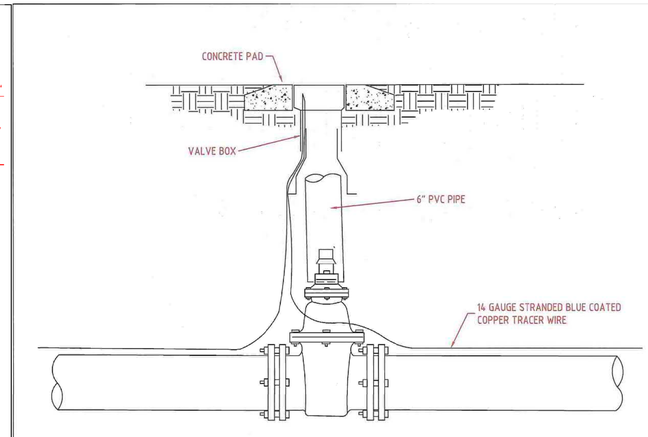

UNION COUNTY PUBLIC WORKS DEPARTMENT
UNION COUNTY, N.C.
STANDARD DETAIL
VALVE BOX INSTALLATION
SCALE: N.T.S. DATE: 10-4-11
1A

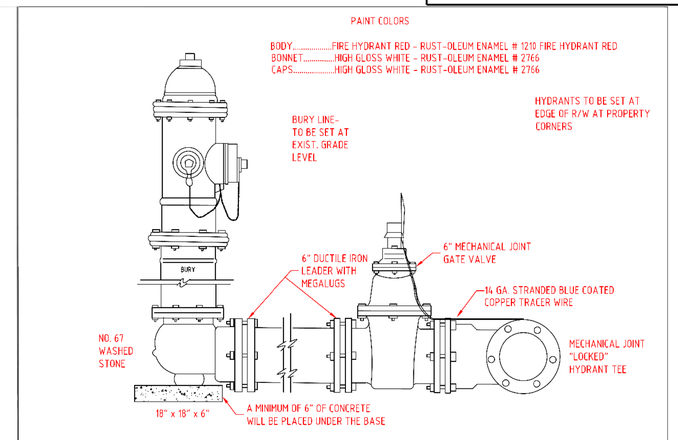

UNION COUNTY PUBLIC WORKS DEPARTMENT
UNION COUNTY, N.C.
STANDARD DETAIL
FIRE HYDRANT INSTALLATION
SCALE: N.T.S. DATE: 1-2-14
3

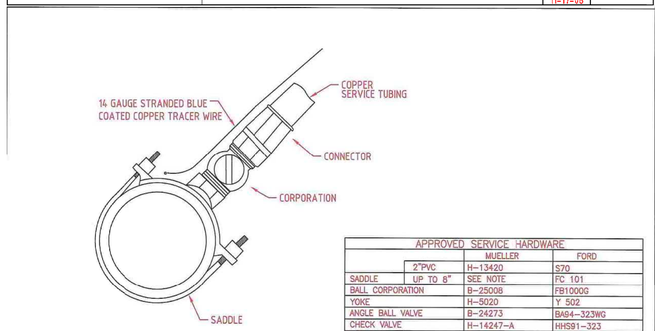

APPROVED SERVICE HARDWARE			
		MUELLER	FORD
	2"PVC	H-13420	S70
SADDLE	UP TO 8"	SEE NOTE	FC 101
BALL CORPORATION		B-25008	FB1000G
YOKE		H-5020	Y 502
ANGLE BALL VALVE		B-24273	BA64-323WG
CHECK VALVE		H-14247-A	HHS91-323
CONNECTORS	COPPER	STYLE 110	GRIP JOINT
EXPANSION CONNECTION			EC 23

NOTE:
ROMAC 101N SHALL REPLACE MUELLER FOR PIPE DIAMETER UP TO 8"

SMITH BLAIR 317, FORD FC 202 OR ROMAC 202N SHALL REPLACE MUELLER FOR PIPE DIA. 12" AND UP

UNION COUNTY PUBLIC WORKS DEPARTMENT
UNION COUNTY, N.C.
STANDARD DETAIL
SERVICE CONNECTION
SCALE: N.T.S. DATE: 10-4-11
5

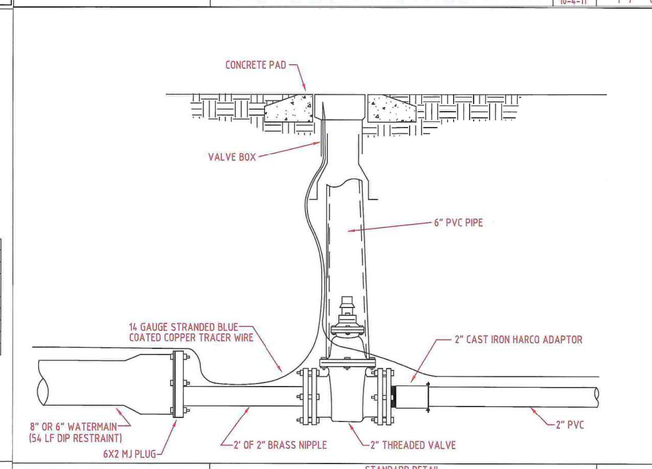

UNION COUNTY PUBLIC WORKS DEPARTMENT
UNION COUNTY, N.C.
STANDARD DETAIL
8" OR 6"X2" REDUCER
SCALE: N.T.S. DATE: 10-4-11
7

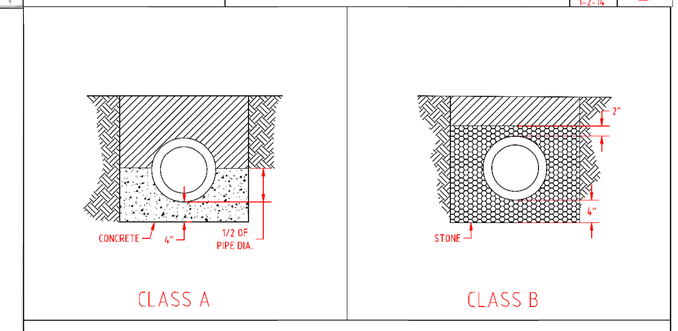

NOTES:
ALL CONCRETE = 3000 PSI
ALL STONE = N.C.D.O.T. NO. 67

UNION COUNTY PUBLIC WORKS DEPARTMENT
UNION COUNTY, N.C.
STANDARD DETAIL
PIPE BEDDING
SCALE: N.T.S. DATE: 11-17-06
8

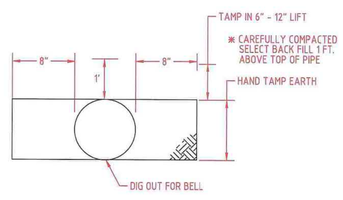

NOTES:
MINIMUM COVER IS 36"
2" PVC SDR 21 (200 PSI)
6"-8" PVC SDR 18
12" OR LARGER DIP

* NO STONES LARGER THAN # 67 STONE SHALL BE USED IN SELECT BACKFILL

UNION COUNTY PUBLIC WORKS DEPARTMENT
UNION COUNTY, N.C.
STANDARD DETAIL
WATER TRENCH
SCALE: N.T.S. DATE: 1-12-06
8B

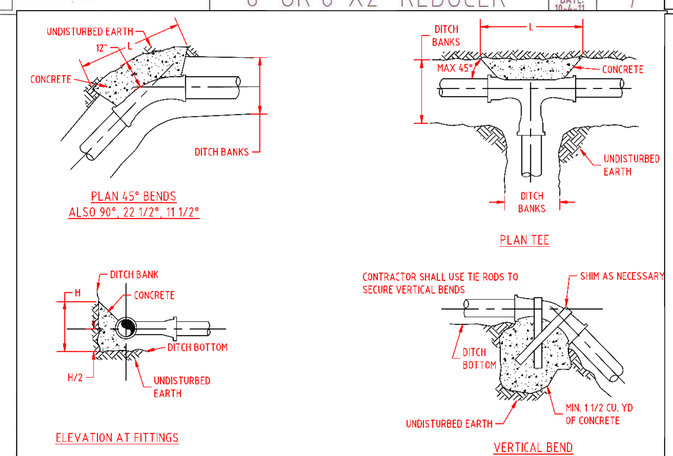

UNION COUNTY PUBLIC WORKS DEPARTMENT
UNION COUNTY, N.C.
STANDARD DETAIL
THRUST BLOCK
SCALE: N.T.S. DATE: 11-17-06
16

ANCHORAGE SCHEDULE											
	11 1/4º BEND		22 1/2º BEND		45º BEND		90º BEND		TEE		TEST PRESSURE
PIPE SIZE	L	H	L	H	L	H	L	H	L	H	(P.S.I.)
6"	1'3"	1'0"	2'3"	1'0"	2'6"	1'6"	2'9"	1'6"	2'0"	1'6"	200
	1'6"	1'3"	2'3"	1'6"	3'0"	1'6"	4'0"	1'6"	3'0"	1'6"	300
8"	1'6"	1'6"	2'6"	1'9"	3'0"	2'0"	3'9"	2'0"	2'6"	2'0"	200
	2'0"	1'6"	3'0"	2'0"	3'9"	2'3"	4'6"	2'6"	3'6"	2'3"	300
12"	2'6"	1'9"	4'0"	2'3"	4'3"	3'0"	5'0"	3'3"	4'0"	3'0"	200
	3'6"	2'0"	5'3"	2'6"	6'0"	3'3"	7'0"	3'6"	5'0"	3'6"	300
14"	3'0"	1'0"	4'0"	3'0"	4'6"	3'9"	6'0"	3'9"	4'6"	3'6"	200
	4'0"	2'6"	5'3"	3'6"	6'0"	4'3"	6'6"	5'0"	5'0"	5'0"	300
16"	3'0"	2'9"	4'6"	3'6"	5'0"	4'6"	7'0"	4'3"	5'0"	4'0"	200
	4'0"	3'0"	6'3"	3'9"	6'5"	5'3"	8'0"	5'3"	7'6"	4'0"	300

THRUST BLOCK DIMENSIONS BASED ON SOIL BEARING CAPACITY OF 2000 P.S.F. AND A WATER TEST PRESSURE OF 150 P.S.I. SIZES OF THRUST BLOCKS MAY BE REVISED BY THE ENGINEER WHERE BEARING CAPACITY OF SOIL VARIES.

PROVIDE TAR PAPER JOINT BETWEEN CONCRETE THRUST BLOCK AND PORTION OF PIPE BEING ANCHORED.

ALL CONCRETE THRUST BLOCKS SHALL BE 2500 P.S.I. CONCRETE.

MAXIMUM VERTICAL DEFLECTION SHALL BE 22 1/2°.

JOINTS SHALL REMAIN FREE OF CONCRETE FOR INSPECTION, REPAIR OR REPLACEMENT OF JOINTS.

UNION COUNTY PUBLIC WORKS DEPARTMENT
UNION COUNTY, N.C.
STANDARD DETAIL
THRUST BLOCK SPECIFICATIONS
SCALE: N/A DATE: 11-17-06
17

1/14/2020

DocuSign Envelope ID: 559CD4B3-945C-4C29-A786-61AA33C30DE3

5/14/99

REVISIONS

Kimley»Horn ©2019
200 SOUTH TRYON ST, SUITE 200
CHARLOTTE, N.C. 28202

PROJECT REFERENCE NO.	SHEET NO.
U-6091	UC-3B
DESIGNED BY: DGB	
DRAWN BY: DGB	
CHECKED BY: MAS	
APPROVED BY: ---	
REVISED:	
NORTH CAROLINA DEPARTMENT OF TRANSPORTATION	
UTILITIES ENGINEERING SEC. PHONE:(919)707-6690 FAX:(919)250-4151	UTILITY CONSTRUCTION PLANS ONLY

NORTH CAROLINA PROFESSIONAL SEAL DocuSigned by: DANIEL G. BUDA ENGINEER 1/14/2020

UTILITY CONSTRUCTION

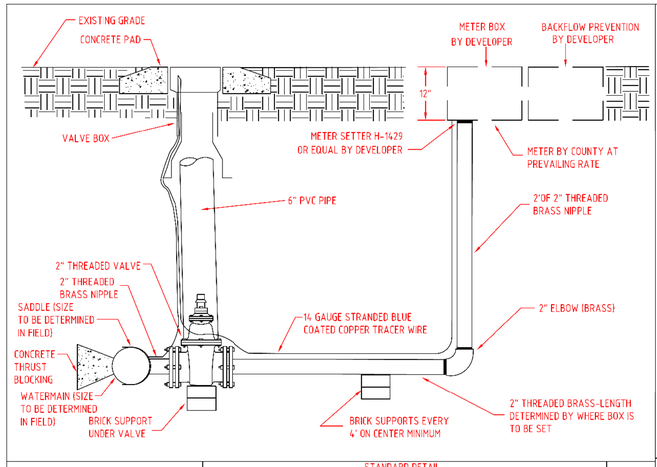

UNION COUNTY PUBLIC WORKS DEPARTMENT
UNION COUNTY, N.C.

STANDARD DETAIL

2" SHORTSIDE SERVICE FOR 1 1/2" OR 2" METERS

SCALE: N.T.S. DATE: 5-22-13 — 19

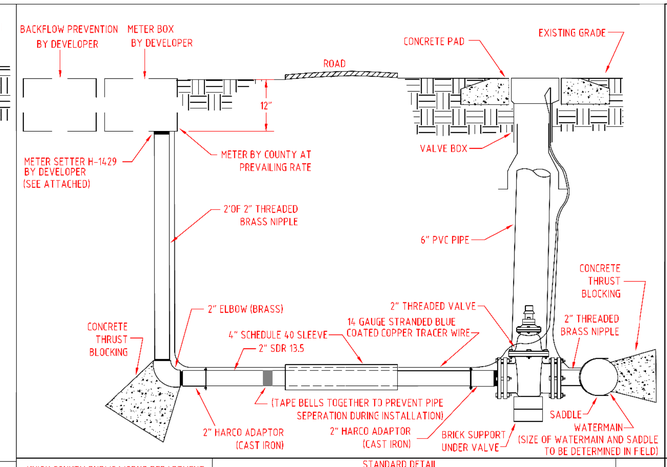

UNION COUNTY PUBLIC WORKS DEPARTMENT
UNION COUNTY, N.C.

STANDARD DETAIL

2" LONGSIDE SERVICE FOR 1 1/2"OR 2" METERS

SCALE: N.T.S. DATE: 5-22-13 — 20

NOTES:

1) INSTALLATION, MATERIALS AND DEVICES SHALL CONFORM TO UNION COUNTY PUBLIC WORKS SPECIFICATIONS AND REQUIREMENTS.

2) ALL PIPE TO BE RESTRAINT JOINT DIP FROM TAP TO BACKFLOW AND/OR FIRE VAULT.THE 1-1/2 & 2 INCH PIPE SHALL BE BRASS TO THE BACKFLOW. ALTERNATE (3 INCH VALVE AND RESTRAINT JOINT DIP IN LIEU OF BRASS)

3) FEES MUST BE PAID PRIOR TO INSTALLATION.

4) NO PVC PIPE SHALL BE USED WITHIN 5 FEET EACH END OF BACKFLOW PREVENTER.

5) 3 INCH & LARGER: CONTRACTOR INSTALLS APPROPIATE DIP LINE THROUGH VAULT AND SUPPLIES VAULT. UNION COUNTY WILL INSTALL METER AND BYPASS AT PREVAILING COSTS. CONTRACTOR TO INSTALL APPROPRIATE SIZE RPZ.

6) FIRE DEPARTMENT CONNECTION (FDC) MUST BE WITHIN 100 FT MAX OF PUBLIC HYDRANT PER FIRE CODE.

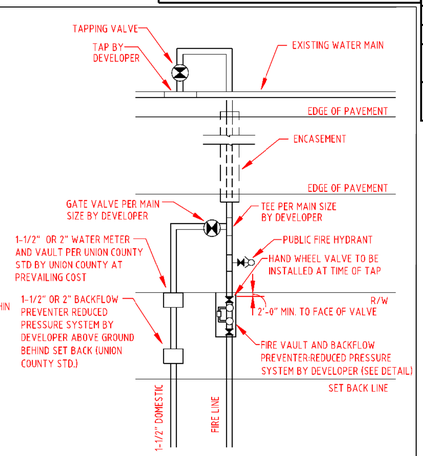

UNION COUNTY PUBLIC WORKS DEPARTMENT
UNION COUNTY, N.C.

STANDARD DETAIL

WATER CONNECTION

SCALE: N.T.S. DATE: 10-17-08 — 22

GENERAL NOTES:

(1) PIPING AND FITTINGS SHALL BE DUCTILE IRON (AWWA C151) CLASS 350 AND SHALL BE RESTRAINED JOINT OR FLANGED AS INDICATED ON THE DETAIL. RESTRAINED JOINTS SHALL BE MEGA-LUG RESTRAINED OR AN APPROVED EQUAL.
(2) ALL VAULTS SHALL BE 3600 PSI CONCRETE AND CAPABLE OF WITHSTANDING 150 PSF LOADING IN NON TRAFFIC AREAS.
(3) ACCESS HATCHES SHALL BE ALUMINUM 150 PSF WITH LOCKABLE COVER DEVICE. MANUFACTURER SHALL BE BILCO, HALIDAY OR APPROVED EQUAL.
(4) INSTALL VAULT AT EDGE OF RIGHT OF WAY. DO NOT PLACE IN PAVEMENT.
(5) PIPING TO BE A MINIMUM OF 18" OFF OF FLOOR.
(6) DEVELOPER MUST CONTACT UCPW CUSTOMER SERVICE TO PAY METER COST & INSTALLATION FEES AND SCHEDULE THE WATER METER INSTALLATION
(7) BYPASS PIPE EQUAL TO METER SIZE

METER DIMENSIONS

Model	Octave			
NOMINAL SIZE	3"	4"	6"	8"
L- LENGTH	12"	14"	18"	20"
B- WIDTH	7 1/2"	9"	11"	13 1/2"
H- HEIGHT	8 1/2"	9 7/8"	10 7/8"	12 7/8"

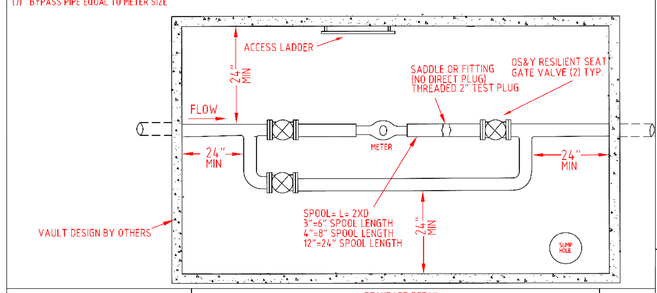

UNION COUNTY PUBLIC WORKS DEPARTMENT
UNION COUNTY, N.C.

STANDARD DETAIL

METER AND VAULT- 3" OR LARGER

SCALE: N.T.S. DATE: 10-22-16 — 28

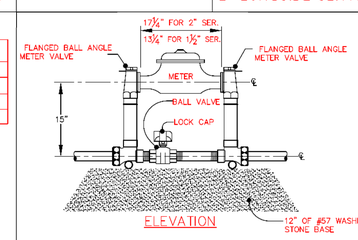

ELEVATION

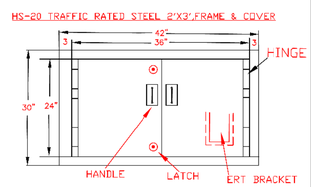

METER VAULT

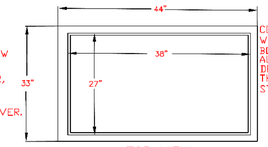

TOP VIEW

NOTES:
1) PIPING TO BE BRASS AND COPPER TUBING. METER INLET AND OUTLET TO BE EQUIPPED WITH FLANGED BALL ANGLE METER.
2) CUSTOM SETTERS SHALL BE EQUIPPED WITH STANDARD LOW BYPASS WITH BALL VALVE AND PADLOCK WINGS
3) CUSTOM SETTERS SHALL BE AS MANFACTURED BY MUELLER, FORD, ANY MCDONALD, OR APPROVED EQUAL.
4) CUSTOM SETTER SHALL BE INSTALLED SUCH THAT METER REGISTER IS LOCATED 5 TO 8 INCHES BELOW METER BOX COVER.
5) METER BY COUNTY @ PREVAILING RATE

UNION COUNTY PUBLIC WORKS DEPARTMENT
UNION COUNTY, N.C.

STANDARD DETAIL

STANDARD $1\frac{1}{2}$" & 2" METER INSTALLATION & VAULT

SCALE: N.T.S. DATE: 6-13-14 — 29

1/14/2020

DocuSign Envelope ID: 559CD4B3-945C-4C29-A786-61AA33C30DE3

5/14/99

REVISIONS

Kimley»Horn ©2019
200 SOUTH TRYON ST, SUITE 200
CHARLOTTE, N.C. 28202

PROJECT REFERENCE NO.	SHEET NO.
U-6091	UC-3C
DESIGNED BY: DGB	
DRAWN BY: DGB	
CHECKED BY: MAS	
APPROVED BY: ---	
REVISED:	
NORTH CAROLINA DEPARTMENT OF TRANSPORTATION	
UTILITIES ENGINEERING SEC. PHONE:(919)707-6690 FAX:(919)250-4151	UTILITY CONSTRUCTION PLANS ONLY

NORTH CAROLINA PROFESSIONAL SEAL 050851 ENGINEER DANIEL G. BULLA
DocuSigned by: Daniel G. Bulla
1/14/2020

UTILITY CONSTRUCTION

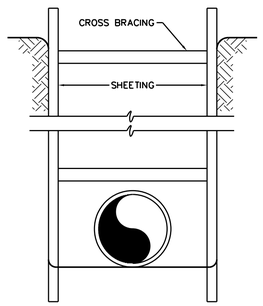

3C / 1 TYPICAL SHEETING
SCALE: N.T.S.

TRENCH EXCAVATION LIMITS		
INTERNAL DIAMETER OF PIPE	W WIDTH OF TRENCH	
	MAX	W=MIN
4"-6"	3'-9"	2'-0"
8"-10"	3'-9"	2'-2"
12"	3'-9"	O.D.+2'
14"-16"	4'-2"	O.D.+2'
18"	4'-4"	O.D.+2'
20",21"	4'-8"	O.D.+2'
24"	4'-11"	O.D.+2'
27"	5'-9"	O.D.+2'
30"	6'-7"	O.D.+2'
36"	7'-4"	O.D.+2'
42"	8'-2"	O.D.+2'
48"	8'-9"	O.D.+2'
54"	9'-4"	O.D.+2'
60"	9'-10"	O.D.+2'
72"	11'-0"	O.D.+2'
78"	11'-8"	O.D.+2'
84"	12'-0"	O.D.+2'
90"	12'-6"	O.D.+2'
96"	13'-0"	O.D.+2'
108"	14'-0"	O.D.+2'
DEPTH OF CUT	S MAXIMUM PAVEMENT REPLACEMENT WIDTH	
0-6'	S=W+4'	
>6-8'	S=W+8'	
>8-10'	S=W+12'	
>10-12'	S=W+16'	
>12-14'	S=W+20'	
>14-16'	S=W+24'	
>16-18'	S=W+28'	
>18'	S=W+32'	
W = TRENCH WIDTH AT BOTTOM OF PIPE. TRENCH SIDE SLOPES SHALL BE IN ACCORDANCE WITH OSHA REQUIREMENTS.		

3C / 2 TRENCH EXCAVATION LIMITS
SCALE: N.T.S.

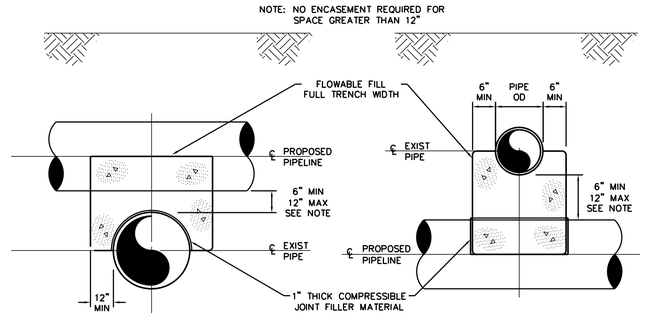

3C / 3 PIPE CRADLE
SCALE: N.T.S.

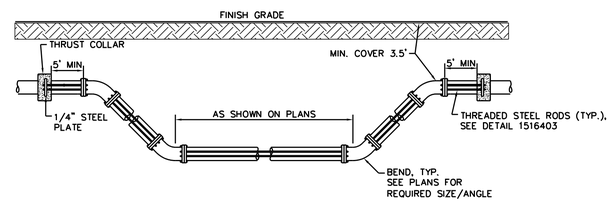

NOTES:
1. ONCE INSTALLED AND TIGHT, THE STEEL RODS AND BOLTS SHALL BE COATED WITH 2 COATS OF BITUMINOUS BASE PAINT.
2. CONCRETE SHALL NOT CONTACT BOLTS OR ENDS OF MECHANICAL JOINT BENDS.
3. MEGALUGS OR RESTRAINED JOINT PIPE AND FITTINGS ARE ALLOWED IN LIEU OF RODDING.
4. CONCRETE ENCASED MEGALUGS MAY BE USED IN LIEU OF THRUST COLLARS.
5. ALL PIPE AND FITTINGS BETWEEN THRUST COLLARS SHALL BE RODDED.

3C / 4 VERTICAL BENDS
SCALE: N.T.S.

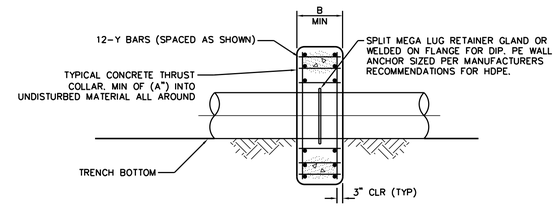

ELEVATION

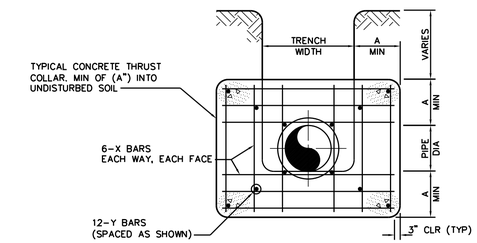

THRUST COLLAR

PIPE SIZE	X BARS	Y BARS	A	B
6"-36"	#5	#5	1'-4"	1'-7"
42"& >	#6	#6	1'-8"	1'-9"

3C / 5 THRUST COLLAR
SCALE: N.T.S.

1/14/2020

DocuSign Envelope ID: 559CD4B3-945C-4C29-A786-61AA33C30DE3

5/14/99

REVISIONS

Kimley»Horn
200 SOUTH TRYON ST, SUITE 200
CHARLOTTE, N.C. 28202
©2019

PROJECT REFERENCE NO.	SHEET NO.
U-6091	UC-4
DESIGNED BY: DGB	
DRAWN BY: DGB	
CHECKED BY: MAS	
APPROVED BY: ---	
REVISED:	
NORTH CAROLINA DEPARTMENT OF TRANSPORTATION	
UTILITIES ENGINEERING SEC. PHONE:(919)707-6690 FAX:(919)250-4151	UTILITY CONSTRUCTION PLANS ONLY

NORTH CAROLINA PROFESSIONAL SEAL 040831 ENGINEER DANIEL G. BULA
Daniel G. Bula
1/14/2020

UTILITY CONSTRUCTION

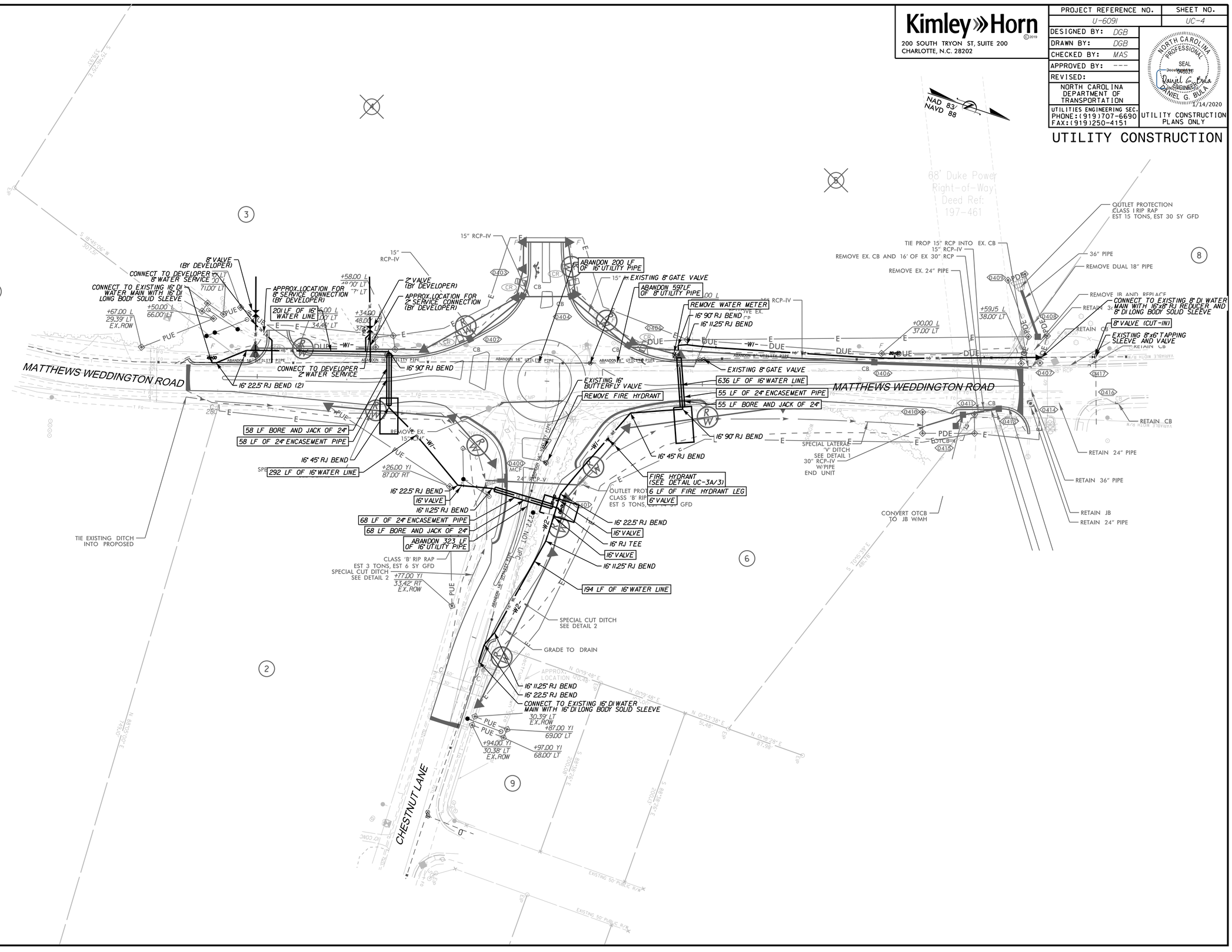

1/14/2020

DocuSign Envelope ID: 559CD4B3-945C-4C29-A786-61AA33C30DE3

Kimley»Horn ©2019
200 SOUTH TRYON ST, SUITE 200
CHARLOTTE, N.C. 28202

PROJECT REFERENCE NO.	SHEET NO.
U-6091	UC-5
DESIGNED BY: DGB	
DRAWN BY: DGB	
CHECKED BY: MAS	
APPROVED BY: ---	
REVISED:	
NORTH CAROLINA DEPARTMENT OF TRANSPORTATION	
UTILITIES ENGINEERING SEC. PHONE:(919)707-6690 FAX:(919)250-4151	UTILITY CONSTRUCTION PLANS ONLY

NORTH CAROLINA PROFESSIONAL SEAL 046031 ENGINEER DANIEL G. BULA
Daniel G. Bula
1/14/2020

UTILITY CONSTRUCTION

REVISIONS

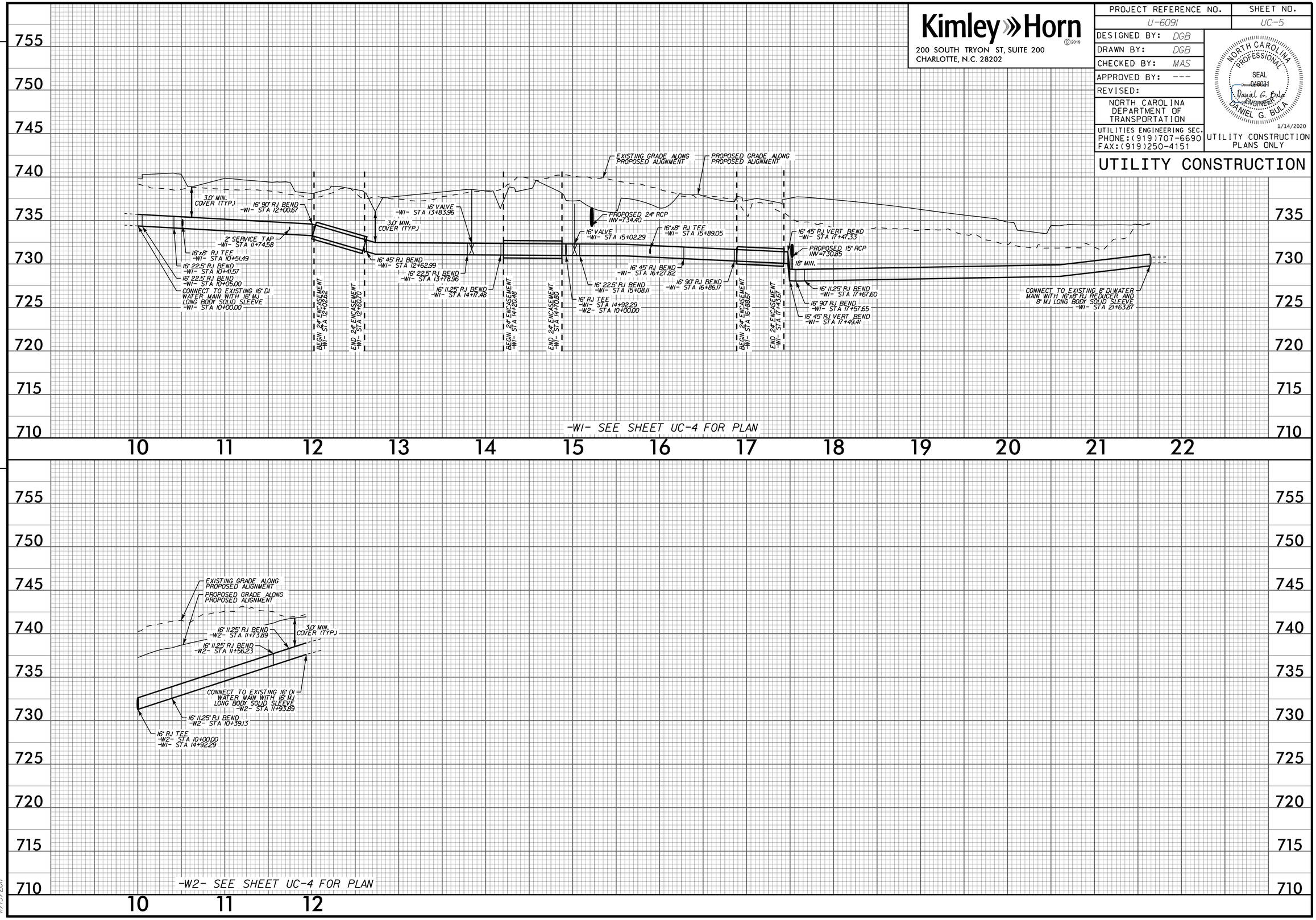

11/13/2017

PROJ. REFERENCE NO.	SHEET NO.
U-6091	X-1

U–6091
CROSS SECTION INDEX

–L– MATTHEWS WEDDINGTON ROAD X–2 THRU X–6

–Y1– CHESTNUT LANE X–7 THRU X–8

–Y2– X–9

0 5 10	PROJ. REFERENCE NO.	SHEET NO.
	U-6091	X-2

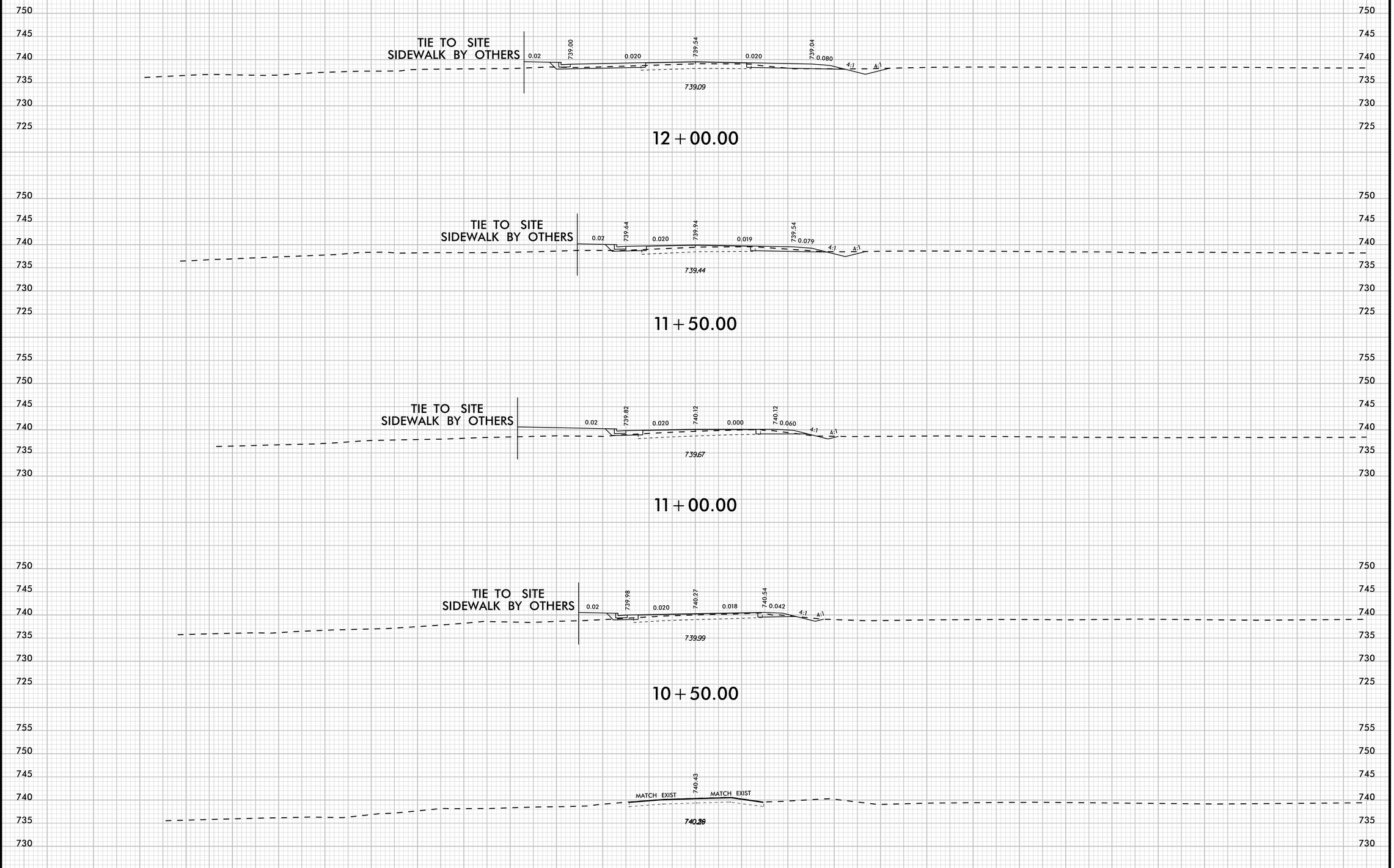

11/13/2017

0 5 10	PROJ. REFERENCE NO.	SHEET NO.
	U-6091	X-3

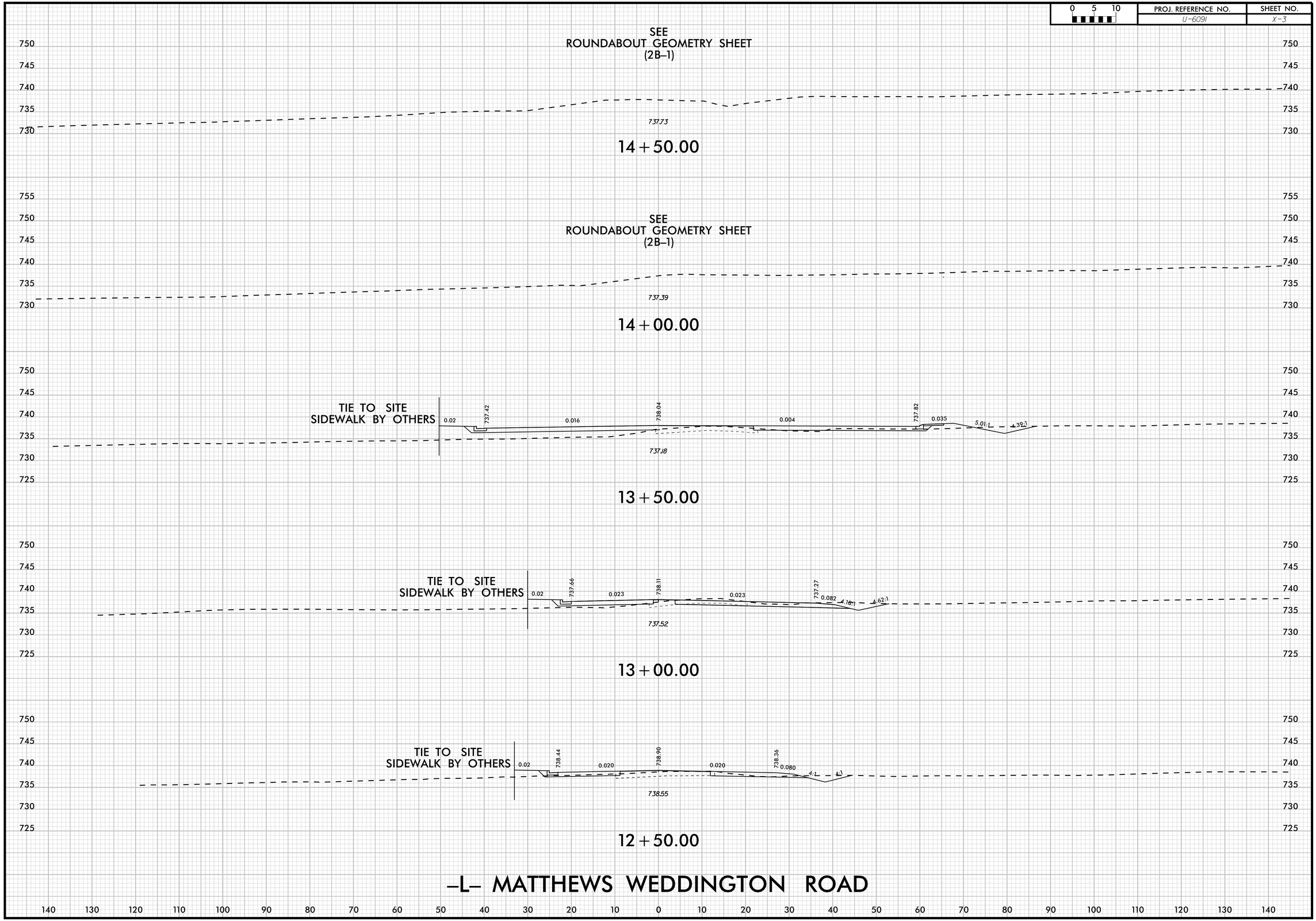

11/13/2017

0 5 10	PROJ. REFERENCE NO.	SHEET NO.
	U-6091	X-4

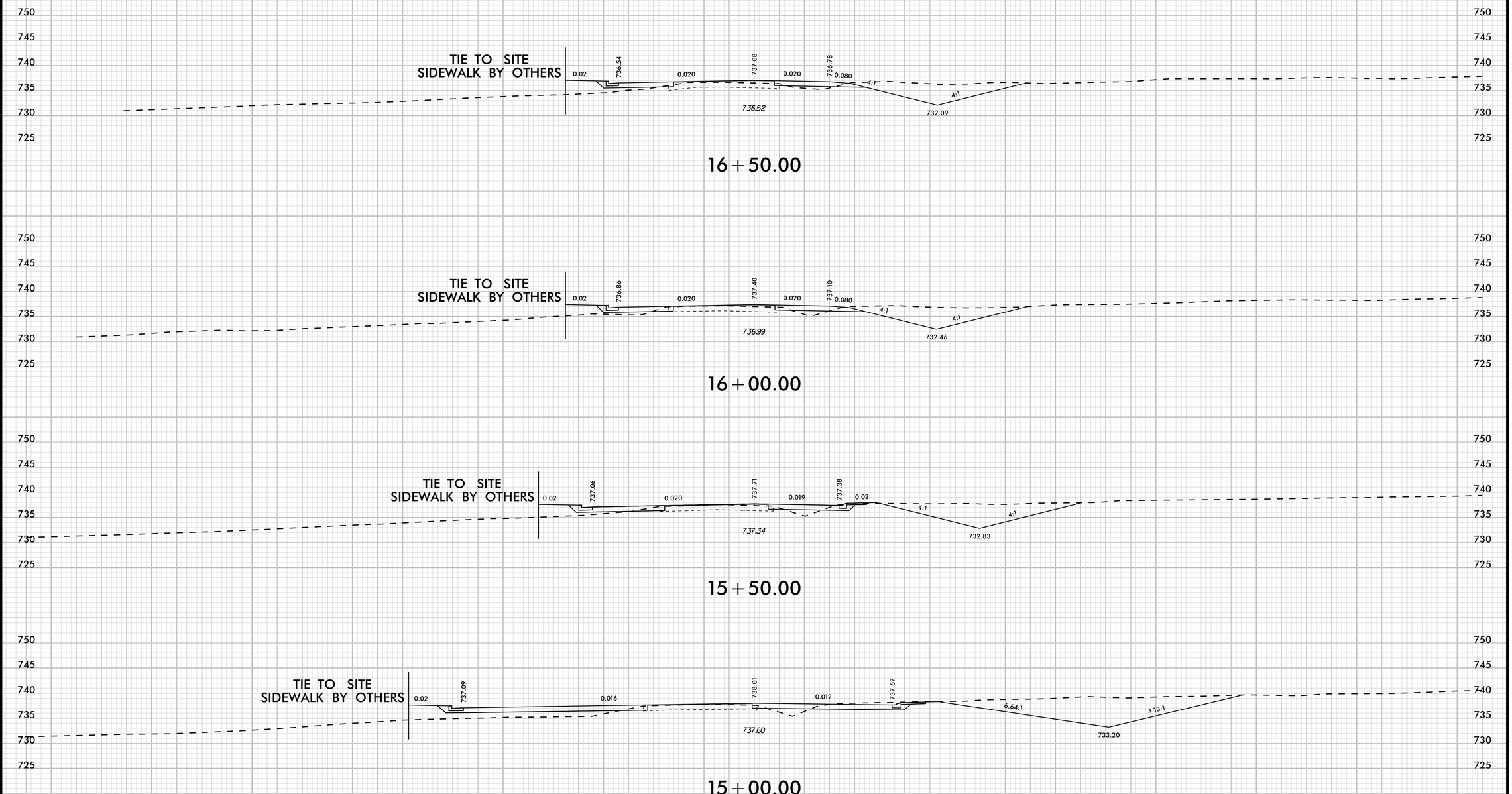

11/13/2017

0 5 10	PROJ. REFERENCE NO.	SHEET NO.
	U-6091	X-5

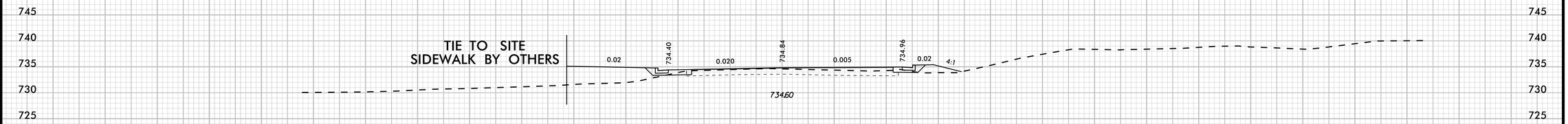

19+00.00

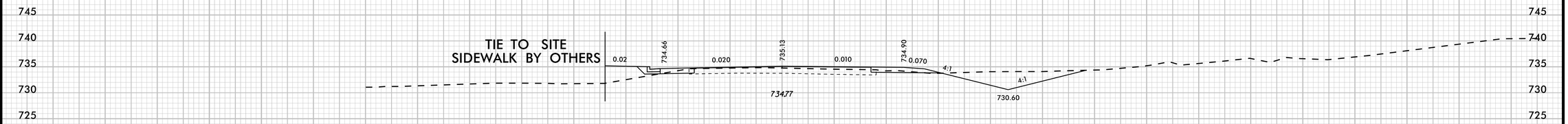

18+50.00

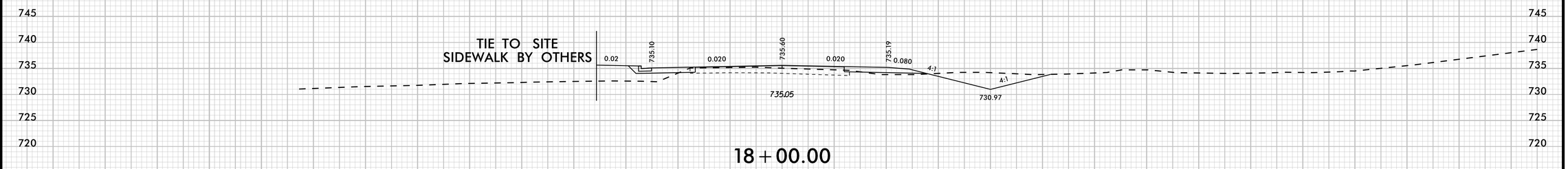

18+00.00

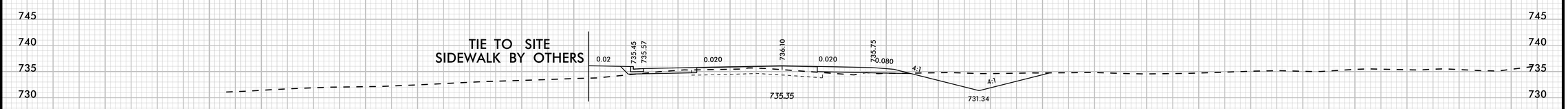

17+50.00

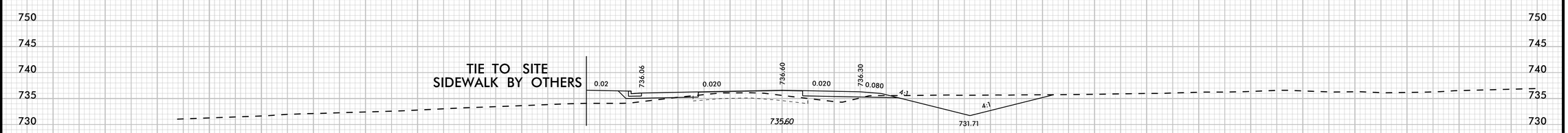

17+00.00

–L– MATTHEWS WEDDINGTON ROAD

140 130 120 110 100 90 80 70 60 50 40 30 20 10 0 10 20 30 40 50 60 70 80 90 100 110 120 130 140

11/13/2017

0 5 10	PROJ. REFERENCE NO.	SHEET NO.
	U-6091	X-6

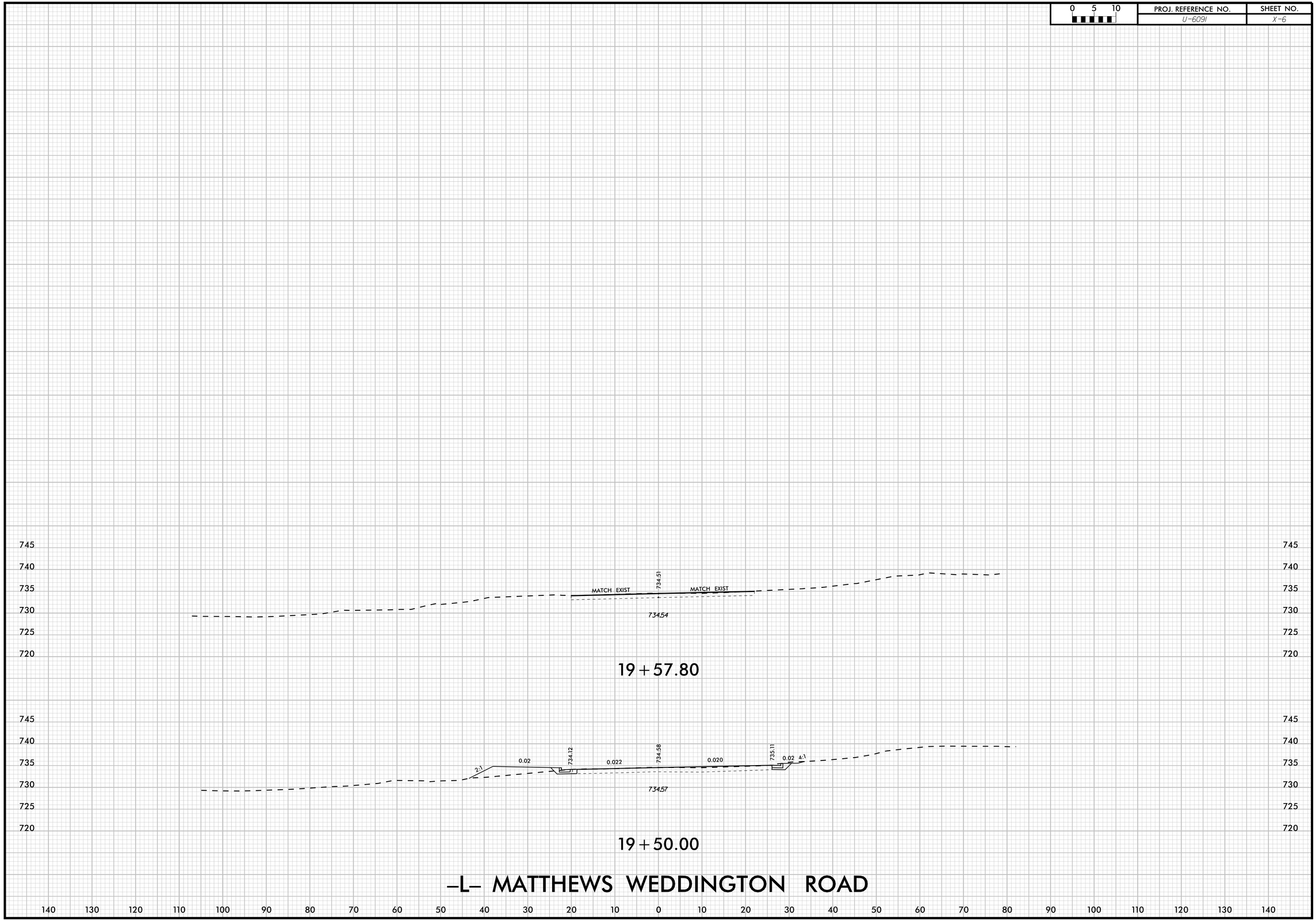

11/13/2017

0 5 10	PROJ. REFERENCE NO.	SHEET NO.
	U-6091	X-7

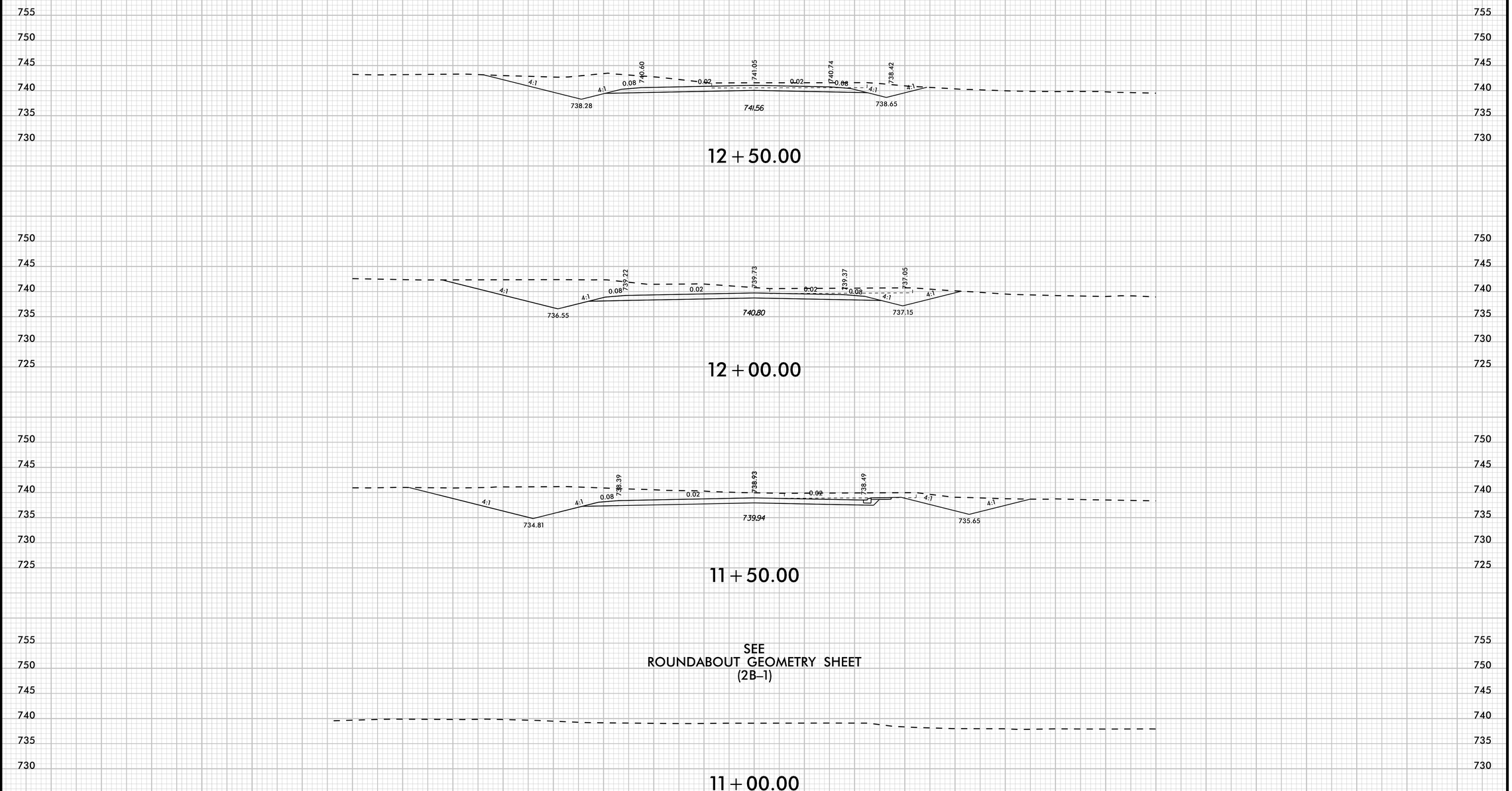

-Y1- CHESTNUT LANE

11/13/2017

0 5 10	PROJ. REFERENCE NO.	SHEET NO.
	U-6091	X-8

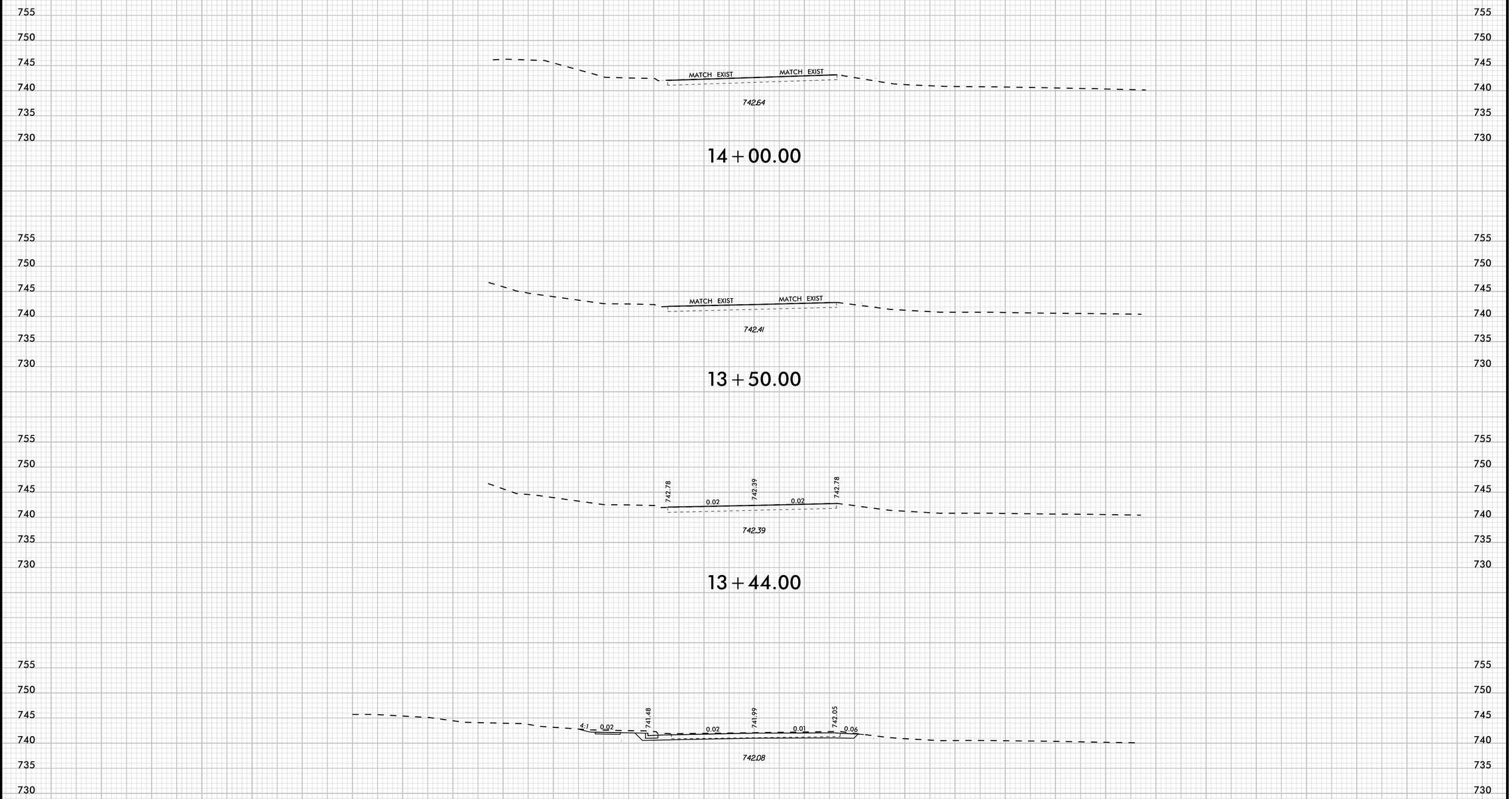

–Y1– CHESTNUT LANE

11/13/2017

0 5 10	PROJ. REFERENCE NO.	SHEET NO.
	U-6091	X-9

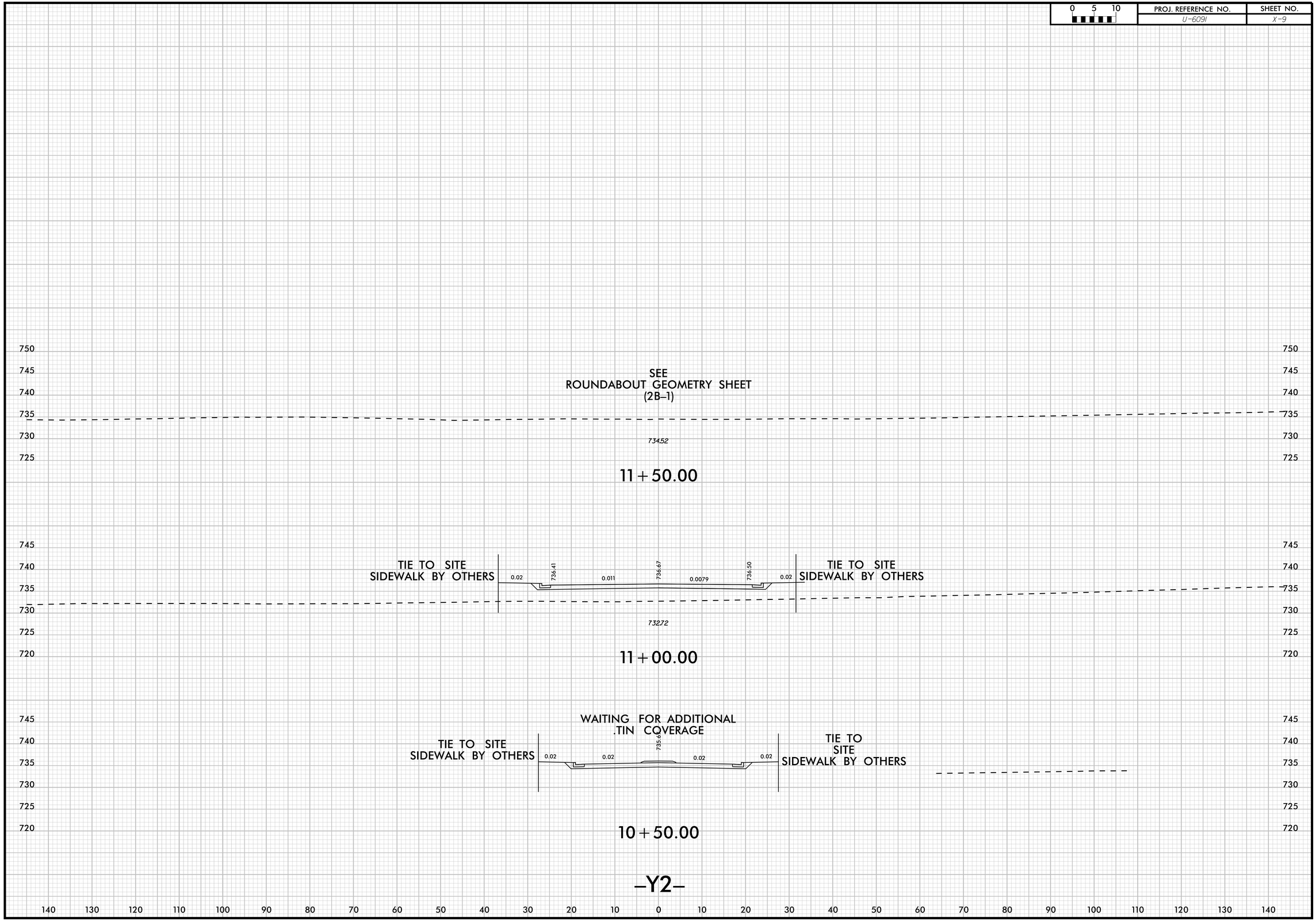

11/13/2017