TIP PROJECT: BD-5110V

See Sheet 1-A For Index of Sheets
See Sheet 1-B For Standard Symbology Sheet

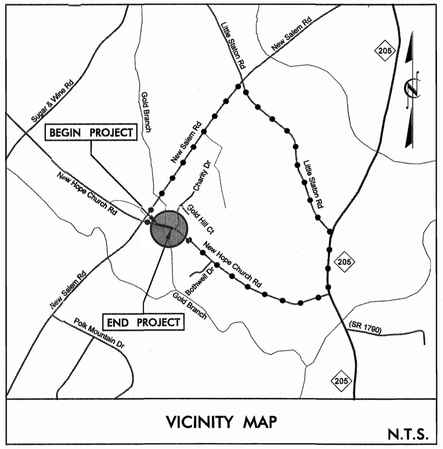

VICINITY MAP N.T.S.

FINAL PLANS

STATE OF NORTH CAROLINA
DIVISION OF HIGHWAYS

UNION COUNTY

STATE	STATE PROJECT REFERENCE NO.	SHEET NO.	TOTAL SHEETS
N.C.	BD-5110V	1	

STATE PROJ. NO.	F. A. PROJ. NO.	DESCRIPTION
45356.1.22	BRZ-1658(1)	P.E.
45356.2.22	BRZ-1658(1)	R /W & UTILITIES
45356.3.22	BRZ-1658(1)	CONST.

LOCATION: BRIDGE #037 OVER GOLD BRANCH ON SR 1658 (NEW HOPE CHURCH ROAD)

TYPE OF WORK: GRADING, PAVING, DRAINAGE & STRUCTURE

NSRS 2007 - NAD 83

BEGIN TIP PROJECT BD-5110V
-L- STA. 10+70.00

END TIP PROJECT BD-5110V
-L- STA. 14+45.00

4

BEGIN BRIDGE
-L- STA. 12+13.88

END BRIDGE
-L- STA. 12+86.13

TO FAIRVIEW

BEGIN CONSTRUCTION
-L- STA. 10+50.00

GOLD BRANCH

SR 1658 (NEW HOPE CHURCH ROAD)
-L-
TO MARSHVILLE

CONTRACT:

FINAL PLANS
3/5/2012

GRAPHIC SCALES

20 10 0 20 40
PLANS

20 10 0 20 40
PROFILE (HORIZONTAL)

4 2 0 4 8
PROFILE (VERTICAL)

DESIGN DATA

ADT 2012 = 760
ADT 2035 = 1,550
DHV = N/A
D = N/A
T = 6%
V = 40 MPH

FUNC. CLASSIFICATION: LOCAL

PROJECT LENGTH

LENGTH OF ROADWAY TIP PROJECT BD-5110V = 0.057 MILES

LENGTH OF STRUCTURE TIP PROJECT BD-5110V = 0.014 MILES

TOTAL LENGTH OF TIP PROJECT BD-5110V = 0.071 MILES

NCDOT CONTACT: GREG JONES, PE
Division Bridge Manager

PLANS PREPARED FOR THE NCDOT BY:
STV/RALPH WHITEHEAD ASSOCIATES, INC.
1000 West Morehead St., Ste. 200, Charlotte NC, 28208
NC License Number F-0991

2012 STANDARD SPECIFICATIONS

RIGHT OF WAY DATE:
SEPTEMBER 22, 2011

LETTING DATE:
APRIL 18, 2012

JOHN N. JOHNSON, PE
PROJECT ENGINEER

MAAMOON K. ABDELAZIZ
PROJECT DESIGN ENGINEER

HYDRAULICS ENGINEER

NORTH CAROLINA PROFESSIONAL SEAL 029803 ENGINEER DAVID C. MORRISON
3/5/12

SIGNATURE: *P.E.*

ROADWAY DESIGN ENGINEER

NORTH CAROLINA PROFESSIONAL SEAL 7215 ENGINEER JOHN N. JOHNSON
3-5-12

SIGNATURE: *P.E.*

DIVISION OF HIGHWAYS STATE OF NORTH CAROLINA

STATE OF NORTH CAROLINA · DEPARTMENT OF TRANSPORTATION

P.E.
STATE HIGHWAY DESIGN ENGINEER

PROJECT REFERENCE NO.	SHEET NO.
BD-5110V	1-A
RW SHEET NO.	

STV / Ralph Whitehead Associates, Inc.
1000 West Morehead St., Ste. 200
Charlotte, NC 28208
NC License Number F-0991

ROADWAY DESIGN ENGINEER

NORTH CAROLINA PROFESSIONAL SEAL 22115 ENGINEER JOHN N. JOHNSON

3-5-12

INDEX OF SHEETS

SHEET NUMBER	SHEET
1	TITLE SHEET
1-A	INDEX OF SHEETS, GENERAL NOTES, AND LIST OF STANDARD DRAWINGS
1-B	CONVENTIONAL SYMBOLS
2	DETAIL SHEET
3	SUMMARIES AND TYPICALS
4	PLAN AND PROFILE SHEET
TCP-1 THRU TCP-2	TRAFFIC CONTROL PLANS
UC-1 THRU UC-4	UTILITY PLANS
UO-1 THRU UO-2	UTILITIES BY OTHERS
EC-1 THRU EC-4	EROSION CONTROL PLANS
X-1 THRU X-2	CROSS-SECTIONS

GENERAL NOTES

GENERAL NOTES: 2012 SPECIFICATIONS
EFFECTIVE: 01-01-2012

GRADE LINE:
GRADING AND SURFACING:

THE GRADE LINES SHOWN DENOTE THE FINISHED ELEVATION OF THE PROPOSED SURFACING AT GRADE POINTS SHOWN ON THE TYPICAL SECTIONS. GRADE LINES MAY BE ADJUSTED AT THEIR BEGINNING AND ENDING AND AT STRUCTURES AS DIRECTED BY THE ENGINEER IN ORDER TO SECURE A PROPER TIE-IN.

CLEARING:

CLEARING ON THIS PROJECT SHALL BE PERFORMED TO THE LIMITS ESTABLISHED BY METHOD II.

SUPERELEVATION:

ALL CURVES ON THIS PROJECT SHALL BE SUPERELEVATED IN ACCORDANCE WITH STD. NO. 225.04 USING THE RATE OF SUPERELEVATION AND RUNOFF SHOWN ON THE PLANS. SUPERELEVATION IS TO BE REVOLVED ABOUT THE GRADE POINTS SHOWN ON THE TYPICAL SECTIONS.

SHOULDER CONSTRUCTION:

ASPHALT, EARTH, AND CONCRETE SHOULDER CONSTRUCTION ON THE HIGH SIDE OF SUPERELEVATED CURVES SHALL BE IN ACCORDANCE WITH STD. NO. 560.01.

GUARDRAIL:

THE GUARDRAIL LOCATIONS SHOWN ON THE PLANS MAY BE ADJUSTED DURING CONSTRUCTION AS DIRECTED BY THE ENGINEER. THE CONTRACTOR SHOULD CONSULT WITH THE ENGINEER PRIOR TO ORDERING GUARDRAIL MATERIAL.

END BENTS:

THE ENGINEER SHALL CHECK THE STRUCTURE END BENT PLANS, DETAILS, AND CROSS-SECTION PRIOR TO SETTING OF THE SLOPE STAKES FOR THE EMBANKMENT OR EXCAVATION APPROACHING A BRIDGE.

RIGHT-OF-WAY MARKERS:

ALL RIGHT-OF-WAY MARKERS ON THIS PROJECT SHALL BE PLACED BY CONTRACT.

STANDARD DRAWINGS

2012 ROADWAY ENGLISH STANDARD DRAWINGS EFF. January, 2012

The following Roadway Standards as appear in "Roadway Standard Drawings" Highway Design Branch - N. C. Department of Transportation - Raleigh, N. C., Dated January, 2012 are applicable to this project and by reference hereby are considered a part of these plans:

STD.NO.	TITLE
DIVISION 2 - EARTHWORK	
200.02	Method of Clearing - Method II
225.02	Guide for Grading Subgrade - Secondary and Local
225.04	Method of Obtaining Superelevation - Two Lane Pavement
DIVISION 5 - SUBGRADE, BASES AND SHOULDERS	
560.01	Method of Shoulder Construction - High Side of Superelevated Curve - Method I
DIVISION 8 - INCIDENTALS	
846.01	Concrete Curb, Gutter and Curb & Gutter
862.01	Guardrail Placement
862.02	Guardrail Installation
862.03	Structure Anchor Units
876.02	Guide for Rip Rap at Pipe Outlets
DIVISION 11 - WORK ZONE TRAFFIC CONTROL	
1110.01	Stationary Work Zone Signs - Mounting Height & Lateral Clearance
1145.01	Barricades - Type III
DIVISION 16 - EROSION CONTROL AND ROADSIDE DEVELOPMENT	
1605.01	Temporary Silt Fence
1606.01	Special Sediment Control Fence
1607.01	Gravel Construction Entrance
1622.01	Guide for Temporary Berms and Slope Drains
1630.01	Riser Basin
1630.03	Temporary Silt Ditch
1630.04	Stilling Basin for Pumped Effluent
1630.05	Temporary Diversion
1630.06	Special Stilling Basin
1632.01	Rock Inlet Sediment Trap Type A
1632.02	Rock Inlet Sediment Trap Type B
1632.03	Rock Inlet Sediment Trap Type C
1633.01	Temporary Rock Silt Check Type A
1633.02	Temporary Rock Silt Check Type B
1634.01	Temporary Rock Sediment Dam Type A
1634.02	Temporary Rock Sediment Dam Type B
1635.01	Rock Pipe Inlet Sediment Trap Type A
1635.02	Rock Pipe Inlet Sediment Trap Type B

R:\Roadway\Proj\BD5110V_rdy_pst01Adgn

3/5/2012

PROJECT REFERENCE NO.	SHEET NO.
BD-5110V	1-B

Note: Not to Scale

****S.U.E. = Subsurface Utility Engineering***

STATE OF NORTH CAROLINA
DIVISION OF HIGHWAYS

CONVENTIONAL PLAN SHEET SYMBOLS

BOUNDARIES AND PROPERTY:

- State Line
- County Line
- Township Line
- City Line
- Reservation Line
- Property Line
- Existing Iron Pin — EIP
- Property Corner
- Property Monument — ECM
- Parcel/Sequence Number — 123
- Existing Fence Line
- Proposed Woven Wire Fence
- Proposed Chain Link Fence
- Proposed Barbed Wire Fence
- Existing Wetland Boundary — WLB
- Proposed Wetland Boundary — WLB
- Existing Endangered Animal Boundary — EAB
- Existing Endangered Plant Boundary — EPB

BUILDINGS AND OTHER CULTURE:

- Gas Pump Vent or U/G Tank Cap
- Sign — S
- Well — W
- Small Mine
- Foundation
- Area Outline
- Cemetery
- Building
- School
- Church
- Dam

HYDROLOGY:

- Stream or Body of Water
- Hydro, Pool or Reservoir
- Jurisdictional Stream — JS
- Buffer Zone 1 — BZ 1
- Buffer Zone 2 — BZ 2
- Flow Arrow
- Disappearing Stream
- Spring
- Wetland
- Proposed Lateral, Tail, Head Ditch — FLOW
- False Sump

RAILROADS:

- Standard Gauge — CSX TRANSPORTATION
- RR Signal Milepost — MILEPOST 35
- Switch — SWITCH
- RR Abandoned
- RR Dismantled

RIGHT OF WAY:

- Baseline Control Point
- Existing Right of Way Marker
- Existing Right of Way Line
- Proposed Right of Way Line — RW
- Proposed Right of Way Line with Iron Pin and Cap Marker — RW
- Proposed Right of Way Line with Concrete or Granite Marker — RW
- Existing Control of Access — CA
- Proposed Control of Access — CA
- Existing Easement Line — E
- Proposed Temporary Construction Easement — E
- Proposed Temporary Drainage Easement — TDE
- Proposed Permanent Drainage Easement — PDE
- Proposed Permanent Utility Easement — PUE
- Proposed Temporary Utility Easement — TUE
- Proposed Permanent Easement with Iron Pin and Cap Marker

ROADS AND RELATED FEATURES:

- Existing Edge of Pavement
- Existing Curb
- Proposed Slope Stakes Cut — C
- Proposed Slope Stakes Fill — F
- Proposed Wheel Chair Ramp — WCR
- Existing Metal Guardrail
- Proposed Guardrail
- Existing Cable Guiderail
- Proposed Cable Guiderail
- Equality Symbol
- Pavement Removal

VEGETATION:

- Single Tree
- Single Shrub
- Hedge
- Woods Line
- Orchard
- Vineyard — Vineyard

EXISTING STRUCTURES:

MAJOR:

- Bridge, Tunnel or Box Culvert — CONC
- Bridge Wing Wall, Head Wall and End Wall — CONC WW

MINOR:

- Head and End Wall — CONC HW
- Pipe Culvert
- Footbridge
- Drainage Box: Catch Basin, DI or JB — CB
- Paved Ditch Gutter
- Storm Sewer Manhole — S
- Storm Sewer — S

UTILITIES:

POWER:

- Existing Power Pole
- Proposed Power Pole
- Existing Joint Use Pole
- Proposed Joint Use Pole
- Power Manhole — P
- Power Line Tower
- Power Transformer
- U/G Power Cable Hand Hole — HH
- H-Frame Pole
- Recorded U/G Power Line — P
- Designated U/G Power Line (S.U.E.*) — P

TELEPHONE:

- Existing Telephone Pole
- Proposed Telephone Pole
- Telephone Manhole — T
- Telephone Booth
- Telephone Pedestal — T
- Telephone Cell Tower
- U/G Telephone Cable Hand Hole — HH
- Recorded U/G Telephone Cable — T
- Designated U/G Telephone Cable (S.U.E.*) — T
- Recorded U/G Telephone Conduit — TC
- Designated U/G Telephone Conduit (S.U.E.*) — TC
- Recorded U/G Fiber Optics Cable — T FO
- Designated U/G Fiber Optics Cable (S.U.E.*) — T FO

WATER:

- Water Manhole — W
- Water Meter
- Water Valve
- Water Hydrant
- Recorded U/G Water Line — W
- Designated U/G Water Line (S.U.E.*) — W
- Above Ground Water Line — A/G Water

TV:

- TV Satellite Dish
- TV Pedestal — C
- TV Tower
- U/G TV Cable Hand Hole — HH
- Recorded U/G TV Cable — TV
- Designated U/G TV Cable (S.U.E.*) — TV
- Recorded U/G Fiber Optic Cable — TV FO
- Designated U/G Fiber Optic Cable (S.U.E.*) — TV FO

GAS:

- Gas Valve
- Gas Meter
- Recorded U/G Gas Line — G
- Designated U/G Gas Line (S.U.E.*) — G
- Above Ground Gas Line — A/G Gas

SANITARY SEWER:

- Sanitary Sewer Manhole
- Sanitary Sewer Cleanout
- U/G Sanitary Sewer Line — SS
- Above Ground Sanitary Sewer — A/G Sanitary Sewer
- Recorded SS Forced Main Line — FSS
- Designated SS Forced Main Line (S.U.E.*) — FSS

MISCELLANEOUS:

- Utility Pole
- Utility Pole with Base
- Utility Located Object
- Utility Traffic Signal Box — S
- Utility Unknown U/G Line — ?UTL
- U/G Tank; Water, Gas, Oil
- A/G Tank; Water, Gas, Oil
- U/G Test Hole (S.U.E.*)
- Abandoned According to Utility Records — AATUR
- End of Information — E.O.I.

r:\roadway\Proj\BD5110V_rdy_psh01B.dgn

3/5/2012

PROJECT REFERENCE NO.	SHEET NO.
BD-5110V	2

DIVISION OF HIGHWAYS
STATE OF NORTH CAROLINA

STATE OF
NORTH CAROLINA
DEPT. OF TRANSPORTATION
DIVISION OF HIGHWAYS
RALEIGH, N.C.

ENGLISH DETAIL DRAWING FOR

MODIFIED CONCRETE FLUME

WITH CONCRETE OR RIP-RAP DITCH

SHEET 1 OF 1

MODFLMDTCH

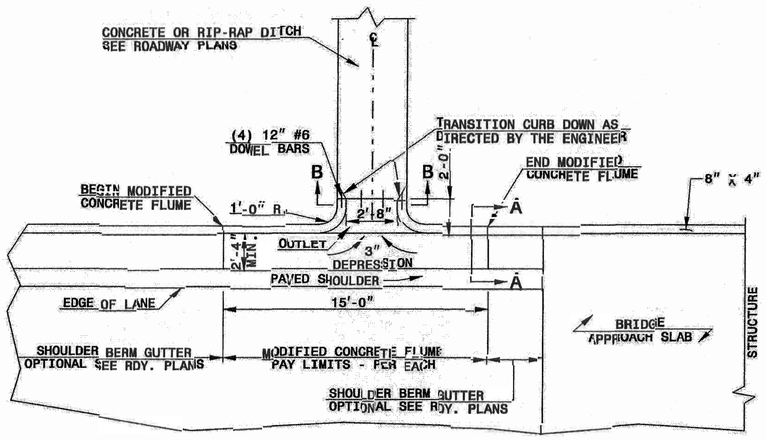

PLAN VIEW

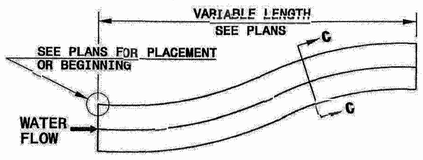

DOWNGRADE OR SAG

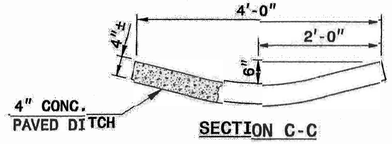

SECTION C-C

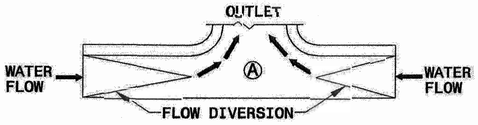

SAG

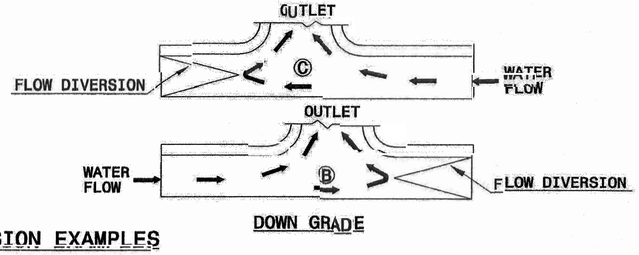

DOWN GRADE

FLOW DIVERSION EXAMPLES

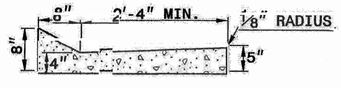

SECTION A-A

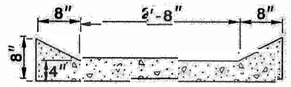

SECTION B-B

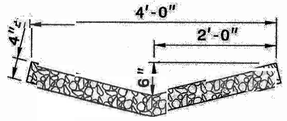

RIP-RAP LINED DITCH

NOTES:

- CONSTRUCT MODIFIED CONCRETE FLUME AND SHOULDER BERM GUTTER IN ACCORDANCE WITH THIS DETAIL.
- CONSTRUCT CONCRETE DITCH IN ACCORDANCE WITH STD. DWG. NO. 850.01.
- CONSTRUCT RIP RAP LINED DITCH IN ACCORDANCE WITH THIS DETAIL, IF CALLED FOR IN PLANS.
- CONCRETE OR RIP RAP LINED DITCH SHALL BE THE TYPE AND LENGTH SPECIFIED BY THE ROADWAY PLANS. THE DITCH SHALL TERMINATE AS SHOWN ON THE PLANS. IF NO TERMINATION IS INDICATED PLACE RIP-RAP AT THE END OF THE DITCH AS INDICATED BY STD. DWG. *876.02* FOR AN 18" PIPE. TRANSITIONS FROM THE DITCH TO TERMINATION SHALL BE AS DIRECTED BY THE ENGINEER.
- MODIFICATIONS SHALL BE AS DICTATED BY SITE CONDITIONS AND DIRECTED BY THE ENGINEER.

NORTH CAROLINA PROFESSIONAL SEAL 032966 ENGINEER
2/24/12

STATE OF
NORTH CAROLINA
DEPT. OF TRANSPORTATION
DIVISION OF HIGHWAYS
RALEIGH, N.C.

ENGLISH DETAIL DRAWING FOR

MODIFIED CONCRETE FLUME

WITH CONCRETE OR RIP-RAP DITCH

SHEET 1 OF 1

MODFLMDTCH

R:\Roadway\Pro\BD5110V_rdy_ast02.dgn

2/23/2012

DIVISION OF HIGHWAYS
STATE OF NORTH CAROLINA

PROJECT REFERENCE NO.	SHEET NO.
BD-5110V	3
R/W SHEET NO.	

ROADWAY DESIGN ENGINEER

NORTH CAROLINA PROFESSIONAL SEAL 22115 ENGINEER JOHN N. JOHNSON
3-5-12

PAVEMENT DESIGN ENGINEER

PAVEMENT DESIGN PROVIDED BY NCDOT

STV / Ralph Whitehead Associates, Inc.
1000 West Morehead St., Ste. 200
Charlotte, NC 28208
NC License Number F-0991

EARTHWORK SUMMARY (IN CUBIC YARDS)

CHAIN	FROM STATION	TO STATION	SIDE	UNCL. EXCAVATION	UNDERCUT	EMBT+%	BORROW	WASTE
–L–	10+70.00	12+15.00	LT & RT	8		17	9	
SUBTOTAL SUMMARY NO. 1				8		17	9	
–L–	12+85.00	14+45.00	LT & RT	9		32	23	
SUBTOTAL SUMMARY NO. 2				9		32	23	
SUBTOTAL SUMMARY 1–2				17		49	32	
LOSS DUE TO CLEARING AND GRUBBING				–229			229	
PROJECT TOTAL				17		49	32	
WASTE IN LIEU OF BORROW								
ESTIMATE 5% FOR TOPSOIL ON BORROW PITS							13	
GRAND TOTAL				–212		49	274	
SAY				0			275	

NOTE: Earthwork quantities are calculated by the Roadway Design Unit. These earthwork quantities are based in part on subsurface data provided by the Geotechnical Engineering Unit.

Approximate quantities only. Unclassified Excavation, Borrow Excavation, Fine Grading, Clearing and Grubbing, Breaking of Existing Pavement, and Removal of Existing Pavement will be paid for at the contract lump sum price for "Grading."

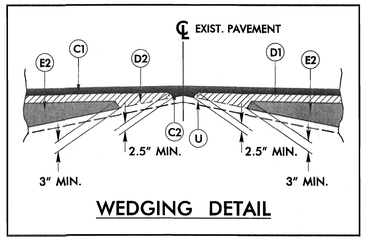

WEDGING DETAIL

	PAVEMENT SCHEDULE
C1	PROP. APPROX. 1.5" ASPHALT CONCRETE SURFACE COURSE, TYPE S9.5B, AT AN AVERAGE RATE OF 168 LBS. PER SQ. YD.
C2	PROP. VAR. DEPTH ASPHALT CONCRETE SURFACE COURSE, TYPE S9.5B, AT AN AVERAGE RATE OF 112 LBS. PER SQ. YD. PER 1" DEPTH. TO BE PLACED IN LAYERS NOT LESS THAN 1.5" IN DEPTH OR GREATER THAN 2.0" IN DEPTH.
D1	PROP. APPROX. 3.5" ASPHALT CONCRETE INTERMEDIATE COURSE, TYPE I19.0B, AT AN AVERAGE RATE OF 399 LBS. PER SQ. YD.
D2	PROP. VAR. DEPTH ASPHALT CONCRETE INTERMEDIATE COURSE, TYPE I19.0B, AT AN AVERAGE RATE OF 114 LBS. PER SQ. YD. PER 1" DEPTH. TO BE PLACED IN LAYERS NOT LESS THAN 2.5" IN DEPTH OR GREATER THAN 4" IN DEPTH.
E1	PROP. APPROX. 3" ASPHALT CONCRETE BASE COURSE, TYPE B25.0B, AT AN AVERAGE RATE OF 342 LBS. PER SQ. YD.
E2	PROP. VAR. DEPTH ASPHALT CONCRETE BASE COURSE, TYPE B25.0B, AT AN AVERAGE RATE OF 114 LBS. PER SQ. YD. PER 1" DEPTH. TO BE PLACED IN LAYERS NOT LESS THAN 3.0" IN DEPTH OR GREATER THAN 5.5" IN DEPTH.
R	CONCRETE SHOULDER BERM GUTTER
T	EARTH MATERIAL
U	EXISTING PAVEMENT
W	PAVEMENT WEDGING

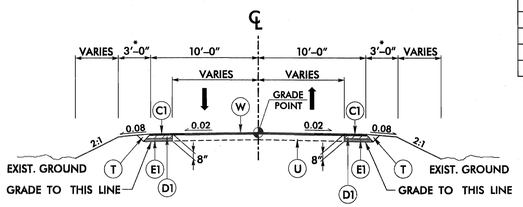

TYPICAL SECTION
–L– STA. 10+70.00 TO 12+13.88 (BEGIN BRIDGE)
–L– STA. 12+86.13 (END BRIDGE) TO 14+45.00

* 6'–0" WITH GUARDRAIL
** ALL PAVEMENT SLOPES ARE 1:1 UNLESS SHOWN OTHERWISE.
*** SEE DETAIL A FOR SHOULDER BERM GUTTER LOCATION

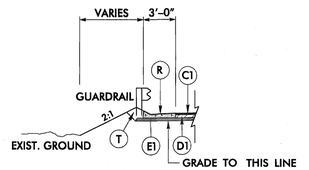

DETAIL A
–L– STA. 12+97.12 TO 13+07.66 (LT. & RT.)

* W MEASURED FROM "N" AT THE BEGINNING OF THE ANCHOR TO "N" AT THE END OF THE ANCHOR.
"N" = DISTANCE FROM EDGE OF LANE TO FACE OF GUARDRAIL.
TOTAL SHOULDER WIDTH = DISTANCE FROM EDGE OF TRAVEL LANE TO SHOULDER BREAK POINT.
FLARE LENGTH = DISTANCE FROM LAST SECTION OF PARALLEL GUARDRAIL TO END OF GUARDRAIL.
W = TOTAL WIDTH OF FLARE FROM BEGINNING OF TAPER TO END OF GUARDRAIL.
G = GATING IMPACT ATTENUATOR TYPE 350
NG = NON-GATING IMPACT ATTENUATOR TYPE 350

GUARDRAIL SUMMARY

SURVEY LINE	BEG. STA.	END STA.	LOCATION	LENGTH: STRAIGHT	LENGTH: SHOP CURVED	LENGTH: DOUBLE FACED	WARRANT POINT: APPROACH END	WARRANT POINT: TRAILING END	"N" DIST. FROM E.O.L.	TOTAL SHOUL. WIDTH	FLARE LENGTH: APPROACH END	FLARE LENGTH: TRAILING END	W*: APPROACH END	W*: TRAILING END	ANCHORS: XI MOD	B–77	GRAU 350	M–350	TYPE III	CAT–1	VI MOD	BIC	AT–1	IMPACT ATTENUATOR TYPE 350: EA	G	NG	SINGLE FACED GUARDRAIL	REMOVE EXISTING GUARDRAIL	REMOVE AND STOCKPILE EXISTING GUARDRAIL	REMARKS
–L–	11+32.63	12+13.88	RT	81.25			12+13.87		3.92–4.92	6.92–7.92	50.0′		1.0′				1		1											
–L–	11+32.63	12+13.88	LT	81.25				12+13.87	3.92–4.92	6.92–7.92		50.0′		1.0′			1		1											
–L–	12+86.13	13+67.85	RT	81.25				12+86.12	3.92–4.92	6.92–7.92		50.0′		1.0′			1		1											
–L–	12+86.13	13+66.92	LT	81.25			12+86.12		3.92–5.54	6.92–8.54	50.0′		1.62′				1		1											
			TOTAL:	325.0													4		4											
			TOTAL ANCHOR LENGTH:	275.0																											
			TOTAL GUARDRAIL LENGTH:	50.0																											
			SAY:	50.0																											

r:\roadway\Proj\BD5110V_rdy_pst03.dgn
3/5/2012

PROJECT REFERENCE NO.	SHEET NO.
BD-5110V	4
RW SHEET NO.	

ROADWAY DESIGN ENGINEER: NORTH CAROLINA PROFESSIONAL SEAL 22115 ENGINEER JOHN A. JOHNSON — 3-5-12

HYDRAULICS ENGINEER: NORTH CAROLINA PROFESSIONAL SEAL 038088 ENGINEER JOHN C. MORRISON — 3/5/12

STV / Ralph Whitehead Associates, Inc.
1000 West Morehead St. Ste. 200
Charlotte, NC 28208
NC License Number F-0991

DATUM DESCRIPTION

THE LOCALIZED COORDINATE SYSTEM DEVELOPED FOR THIS PROJECT IS BASED ON THE STATE PLANE COORDINATES ESTABLISHED BY NCDOT FOR MONUMENT "BD-5110-V BL-2" WITH NAD 83/NSRS 2007 STATE PLANE GRID COORDINATES OF NORTHING: 496110.067(ft) EASTING: 1581303.150(ft)
ELEVATION: 458.63(ft)
THE AVERAGE COMBINED GRID FACTOR USED ON THIS PROJECT (GROUND TO GRID) IS: 0.999858
THE N.C. LAMBERT GRID BEARING AND LOCALIZED HORIZONTAL GROUND DISTANCE FROM "BD-5110-V BL-2" TO -L- POT STATION 10+70.00 IS N 79° 16' 15.806" W 202.120 (ft)
ALL LINEAR DIMENSIONS ARE LOCALIZED HORIZONTAL DISTANCES
VERTICAL DATUM USED IS NAVD 88

BL-1	N 495993.606	E 1581580.081	ELEV 466.93
BL-2	N 496110.067	E 1581303.150	ELEV 458.63
BL-3	N 496167.948	E 1580964.890	ELEV 470.30

DETAIL A
SPECIAL CUT DITCH
(Not to Scale)

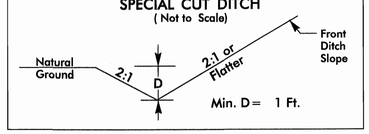

FROM STA. 10+50 TO STA. 12+45 LT.

NAD 83 NSRS 2007

TRIPLE T HOMEBUILDERS, INC.
DB 4754 PG 124

RICHARD AND MELISSA WEBB
DB 1587 PG 538

GOLD BRANCH

SPECIAL CUT DITCH SEE DETAIL A

BEGIN BRIDGE -L- STA 12+13.88

CLASS II RIP RAP

END BRIDGE -L- STA 12+86.13

END SBG +07.66

0.5 TN CLASS A RIP RAP W/2.5 SY GEO FOR DRN, TYPE 2

MODIFIED CONCRETE FLUME

END TIP PROJECT BD-5110V -L- POT 14+45.00

EXISTING R/W

CHARITY DR. SR 2771 BST WIDTH VARIES

30" RCP

TYPE III

GRAU-350

S 76° 20' 49.2" E

SR 1658 NEW HOPE CHURCH RD 18' BST

-L- NEW HOPE CHURCH RD

22' (TYP)

15' TAPER TO EXIST (LT & RT)

TAPER TO EXIST (LT & RT) 20'

BEGIN APPROACH SLAB -L- STA 12+02.88

END APPROACH SLAB -L- STA 12+97.13

CLASS II RIP RAP

BEGIN TIP PROJECT BD-5110V -L- POT 10+70.00

BEGIN CONSTRUCTION -L- 10+44.55

POT Sta. 10+00.00

ALL POWER POLES ARE UNION POWER CORPORATION

NOTE: INCIDENTAL MILL APPROX 25' AT EACH TIE IN TO PROVIDE A SMOOTH TRANSITION TO THE EXISTING ASPHALT PAVEMENT

GARY PAUL SMITH et al
DB 094 PG 484

MARK AND NANCY WHITLEY
DB 1619 PG 726

PC Sta. 13+10.01

PCC Sta. 14+47.27

PT Sta. 15+49.59

POT Sta. 15+84.63

PI Sta 13+78.74
Δ = 3° 08' 31.5" (RT)
D = 2° 17' 30.6"
L = 137.10'
T = 68.57'
R = 2,500.00'

PI Sta 14+98.55
Δ = 9° 46' 13.3" (RT)
D = 9° 32' 57.5"
L = 102.31'
T = 51.28'
R = 600.00'

+73.49 14.49' BL-1

S 63° 26' 04.4" E

NEW HOPE CHURCH RD 18' BST

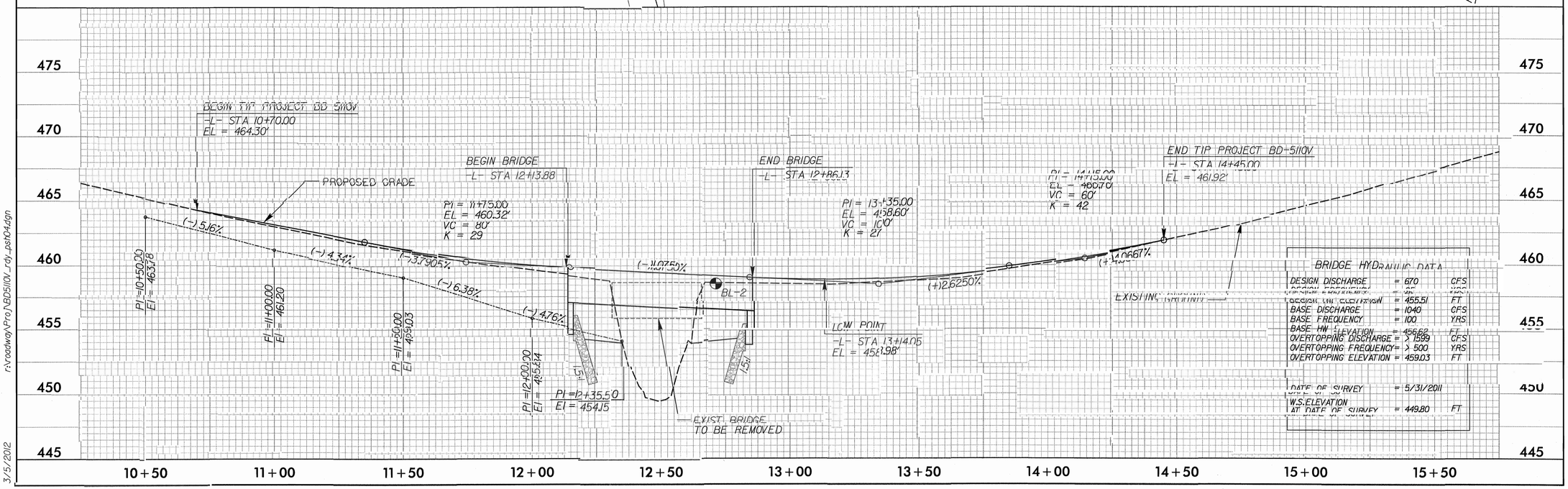

BRIDGE HYDRAULIC DATA

DESIGN DISCHARGE	= 670	CFS
DESIGN HW ELEVATION	= 455.51	FT
BASE DISCHARGE	= 1040	CFS
BASE FREQUENCY	= 100	YRS
BASE HW ELEVATION	= 456.68	FT
OVERTOPPING DISCHARGE	= > 1599	CFS
OVERTOPPING FREQUENCY	= > 500	YRS
OVERTOPPING ELEVATION	= 459.03	FT
DATE OF SURVEY	= 5/31/2011	
W.S.ELEVATION AT DATE OF SURVEY	= 449.80	FT

r:\roaddwg\Proj\BD5110_rdy_pstO4.dgn

3/5/2012

PROJECT REFERENCE NO.	SHEET NO.
BD-5110V	TCP-1
RW SHEET NO.	

STV / Ralph Whitehead Associates, Inc.
1000 West Morehead St., Ste. 200
Charlotte, NC 28208
NC License Number F-0991

ROADWAY DESIGN ENGINEER

NORTH CAROLINA PROFESSIONAL SEAL 22115 ENGINEER KEVIN M. JOHNSON
3-5-12

DETOUR ROUTE

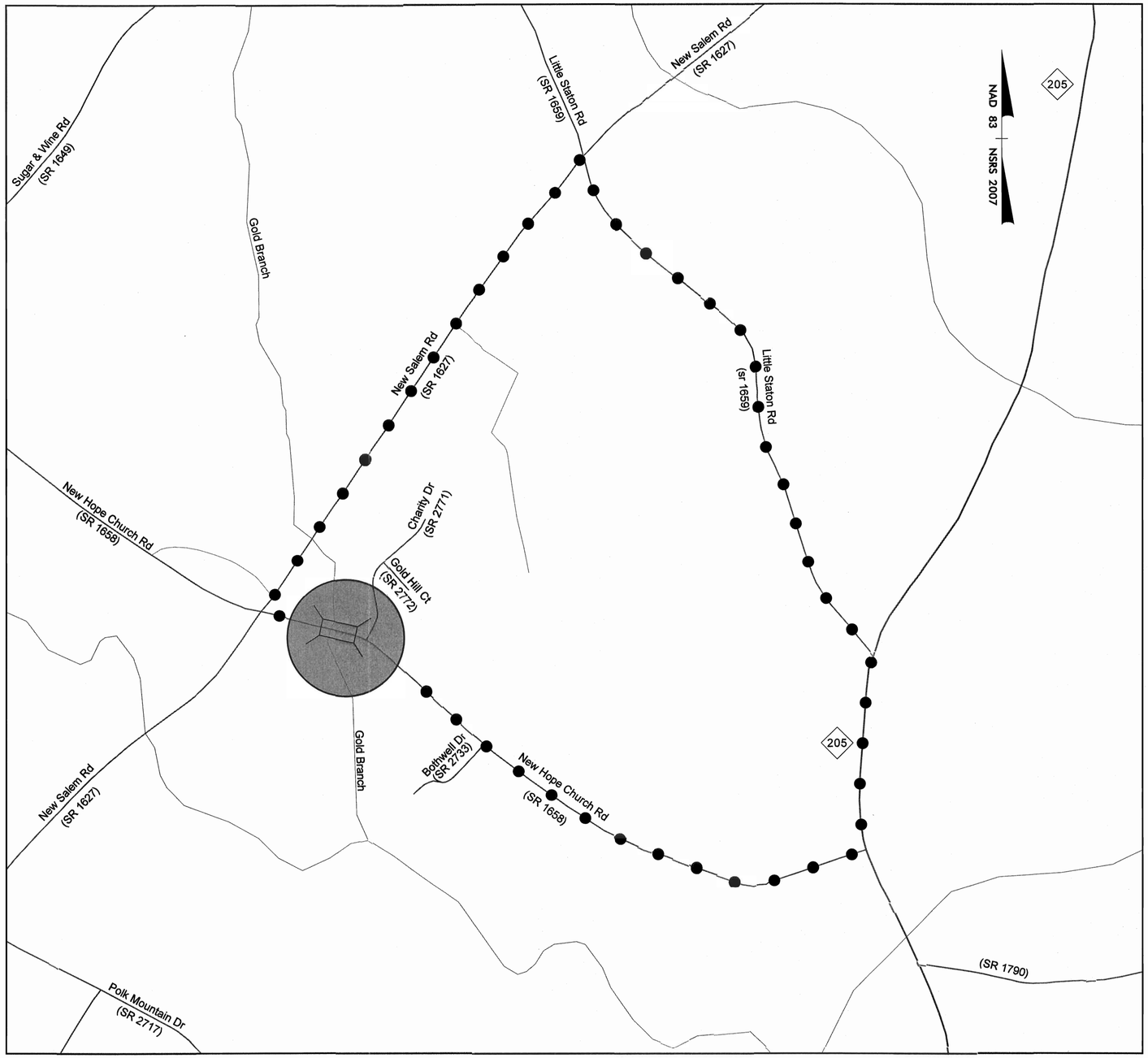

Approximate Scale: 1" = 500'

3/5/2012 r:\Traffic\Traffic Control\TCP\BD5110V_rdy_tcp01.dgn

PROJECT REFERENCE NO.	SHEET NO.
BD-5110V	TCP-2
RW SHEET NO.	

TEMPORARY ROAD CLOSURE

CLOSURE BEYOND DETOUR POINT

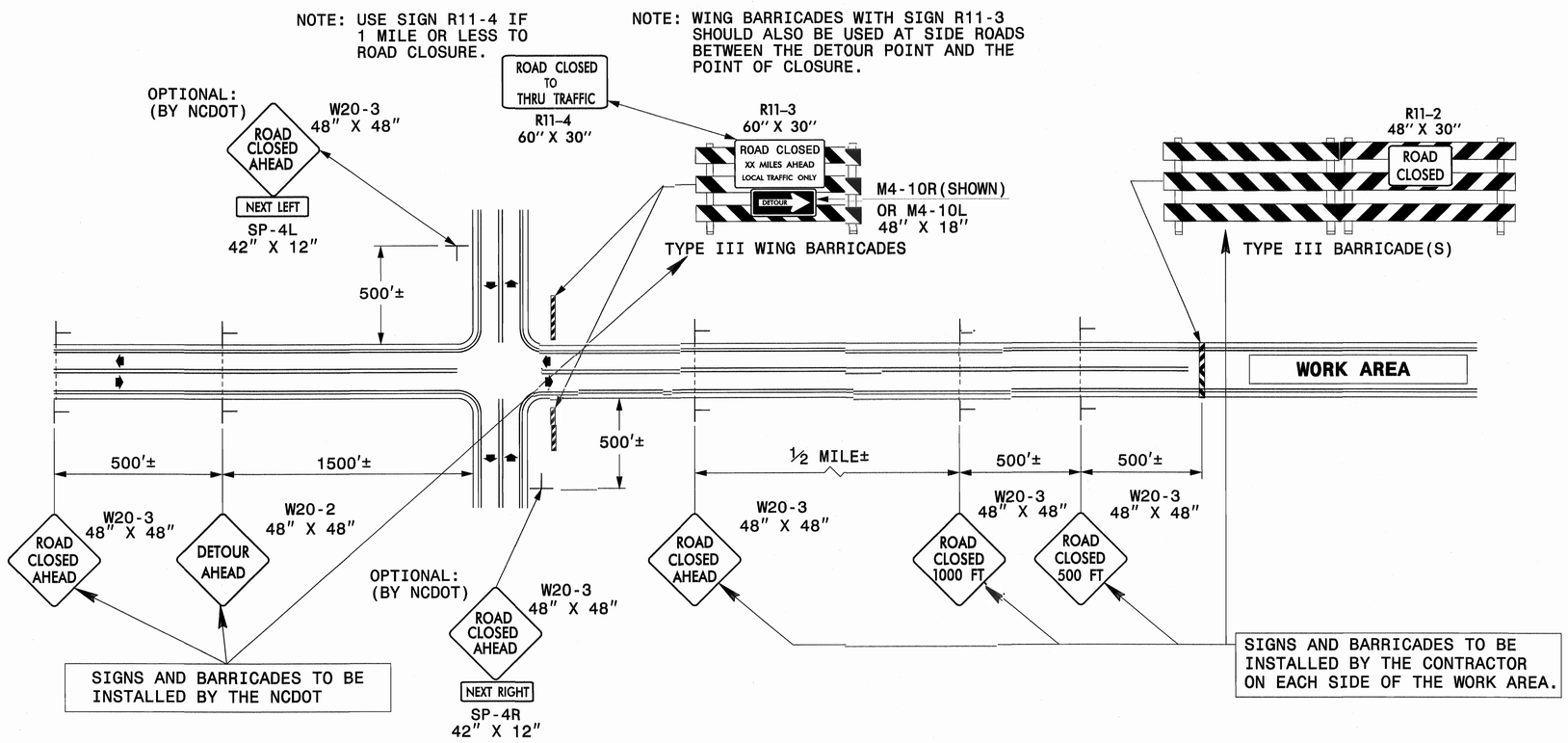

GENERAL NOTES

1-IF NECESSARY USE THIS STD. FOR TWO-LANE, TWO-WAY, AND MULTILANE DIVIDED AND UNDIVIDED ROADWAYS.

2-INSTALLATION OF DETOUR ROUTING PANELS, TEMPORARY ROUTE MARKERS, DESTINATION SIGNS, AND ANY NECESSARY MODIFICATIONS TO EXISTING OR PROPOSED REGULATORY OR WARNING SIGNS WILL BE MADE BY NCDOT FORCES UNLESS OTHERWISE DESIGNATED IN THE PLANS. PROVIDE A MINIMUM 21 CALENDAR DAY NOTICE TO STATE FORCES BEFORE A ROADWAY IS CLOSED TO TRAFFIC SUCH THAT THE NECESSARY PROVISIONS CAN BE MADE TO INSTALL DETOUR ROUTE SIGNS, INFORM LOCAL EMERGENCY AND LAW ENFORCEMENT PERSONNEL, SCHOOLS, OR ANY OTHER PARTIES AFFECTED BY THE ROAD CLOSURE.

3-INSTALL SIGNS BEFORE THE BARRICADES WHEN CLOSING THE ROADWAY TO TRAFFIC. REMOVE BARRICADES BEFORE SIGNS WHEN OPENING THE ROADWAY TO TRAFFIC. INSTALL/REMOVE SIGNS AND BARRICADES WITHIN THE SAME CALENDAR DAY.

4-USE ADDITIONAL TYPE III BARRICADES IN STAGGERED LOCATIONS SUPPLEMENTED WITH SIGN R11-4 "ROAD CLOSED TO THRU TRAFFIC" IN THE EVENT THAT TRAFFIC MUST BE MAINTAINED BEYOND THE DETOUR POINT.

5-DO NOT DISPLAY FRACTIONS OR DECIMALS ON SIGN R11-3 "ROAD CLOSED XX MILES AHEAD".

6-POSITION WING BARRICADES ON THE SHOULDERS AND SLOPE THE STRIPES DOWNWARD IN THE DIRECTION TOWARD WHICH TRAFFIC MUST TURN IN DETOURING.

7-USE PORTABLE SIGNS IF ROAD CLOSURE IS TO BE IMPLEMENTED FOR LESS THAN ONE DAY OR FOR EMERGENCIES.

LEGEND

- ⊢ STATIONARY SIGN
- ⬅ DIRECTION OF TRAFFIC FLOW

r:\Traffic\Traffic Control\TCP\BD5110V_rdy_tcp02.dgn

3/5/2012

09/08/99

TIP PROJECT: BD-5110V

T.I.P. NO.	SHEET NO.
BD-5110V	UC-1

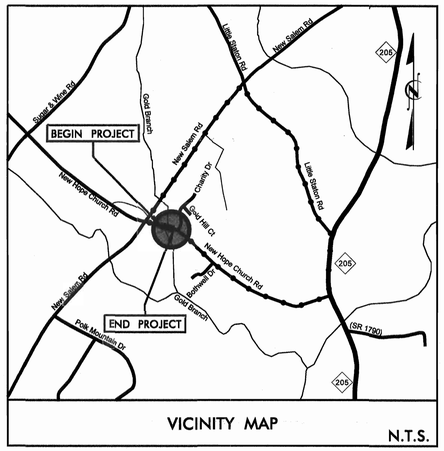

STATE OF NORTH CAROLINA
DIVISION OF HIGHWAYS

UTILITY CONSTRUCTION PLANS
UNION COUNTY

LOCATION: BRIDGE #037 OVER GOLD BRANCH ON SR 1658 (NEW HOPE CHURCH ROAD)

TYPE OF WORK: UTILITY CONSTRUCTION

NSRS 2007 — NAD 83

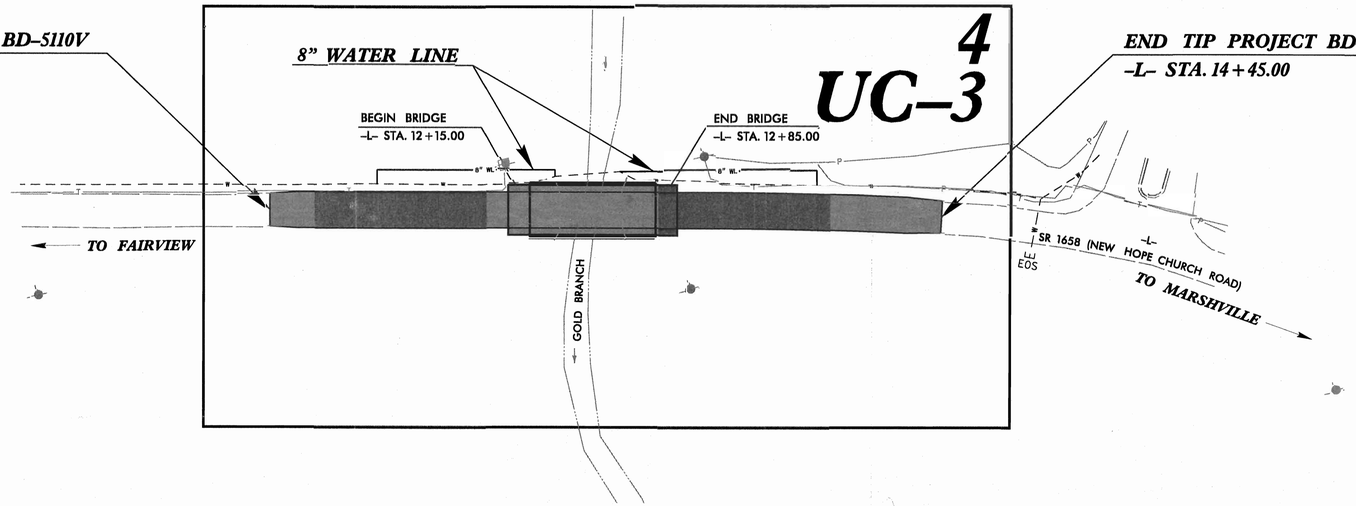

INDEX OF SHEETS

SHEET NO.	*DESCRIPTION*
UC-1	*TITLE SHEET*
UC-2	*SYMBOLOGY SHEET*
UC-3	*UTILITY PLAN AND PROFILE SHEET*

WATER AND SEWER OWNERS ON PROJECT

(1) WATER - UNION COUNTY PUBLIC WORKS

SEAL

NORTH CAROLINA PROFESSIONAL SEAL 26960 ENGINEER REECE W. SCHULER

1/25/12

V&M
Vaughn & Melton
Consulting Engineers
3089-L Beam Road
Charlotte, NC 28217
704-357-0488

STATE OF NORTH CAROLINA DEPARTMENT OF TRANSPORTATION

PREPARED IN THE OFFICE OF:
DIVISION OF HIGHWAYS
UTILITIES ENGINEERING SECTION
1591 MAIL SERVICES CENTER
RALEIGH NC 27699-1591
PHONE (919) 250-4128
FAX (919) 250-4119

Roger Worthington, P.E.	*UTILITIES SECTION ENGINEER*
Xxxxx Xxxxx, P.E.	*UTILITIES SQUAD LEADER PROJECT ENGINEER*
Reece Schuler, PE	*UTILITIES PROJECT DESIGNER*

$$$$SYSTIME$$$$
$$$$USERNAME$$$$
$$$$DGN$$$$

ID-5110V_UI_UC01_tsh.dgn 1/25/2012 3:41:52 PM

5/14/99

Note: Not to Scale

****S.U.E. = Subsurface Utility Engineering***

STATE OF NORTH CAROLINA
DIVISION OF HIGHWAYS

UTILITIES PLAN SHEET SYMBOLS

Vaughn & Melton
Consulting Engineers
Charlotte, North Carolina 704-357-0488
Asheville, North Carolina 828-253-2796
Tri-Cities, Tennessee 423-467-8401
Knoxville, Tennessee 865 546-5800
Middlesboro, Kentucky 606-248-5800
Spartanburg, South Carolina 864-574-4775

Copyright © 2006 Vaughn & Melton, Inc. All Rights Reserved

PROJECT REFERENCE NO.	SHEET NO.
BD-5110V	UC-2
DESIGNED BY: RMS	
DRAWN BY: WSN	
CHECKED BY: RMS	
APPROVED BY:	
REVISED:	
NORTH CAROLINA DEPARTMENT OF TRANSPORTATION	
UTILITIES ENGINEERING SEC. PHONE: (919)250-4128 FAX: (919)250-4119	UTILITY CONSTRUCTION PLANS ONLY

NORTH CAROLINA PROFESSIONAL SEAL 26980 ENGINEER REECE M. SCHULTZ 1/25/12

UTILITY CONSTRUCTION

Water

- Proposed Back Flow Preventor ..... PBFP
- Relocate Back Flow Preventor ..... RBFP
- Existing Water Valve ..... WV
- Proposed Valve ..... GV
- Proposed Tapping Valve ..... TGV
- Existing Water Meter ..... WM
- Proposed Water Meter ..... PWM
- Proposed Water Meter / Vault ..... PWM
- Relocate Water Meter ..... RWM
- Remove Water Meter ..... REM WM

- Existing Hydrant ..... H
- Prop Hydrant ..... PFH
- Relocate Hydrant ..... RFH
- Remove Hydrant ..... REM FH

- Proposed RPZ Back Flow Preventor ..... PRPZ
- Relocate RPZ Back Flow Preventor ..... RRPZ
- 45° Bend w/Thrust Block .....
- Water Plug .....
- Water Cross .....
- Water Plug .....
- Water Reducer .....
- Water Tee .....
- Water Pump Station ..... PS(W)
- Water Thrust Block .....
- Blow Off Valve ..... BO
- Air Release Valve ..... AR
- Water Line Stop ..... LS
- Water Line Stop w Bypass ..... LS/BP

Utility By Other Symbols

- Proposed Tel Pole .....
- Proposed Power Pole .....
- Proposed Joint Use Power, Tel Pole .....
- Proposed Joint Use Power, CATV Pole .....
- Proposed Joint Use Power, Tel, CATV Pole .....
- Proposed Joint Use Tel, CATV Pole .....

Sewer

- Existing Manhole ..... MH
- Proposed UT Manhole .....
- Remove UT Manhole ..... REM UT MH
- Abandon Utility Manhole ..... ABAND MH
- Sewer Line Stop ..... LS
- Sewer Line Stop w Bypass ..... LS/BP
- U/G Sanitary Sewer Line ..... ——SS——

- Sewer Cross .....
- Sewer Plug .....
- Sewer Reducer .....
- Sewer Tee .....
- Sewer Pump Station ..... PS(SS)
- Sewer Thrust Block .....

- PUE Monument .....
- Concrete Pier ..... CP
- Steel Pile Pier ..... SP
- Test Hole (SUE) .....
- Prop Utility Vault ..... UV

SYSTEM §§DGN §§ LEVEL §§ TIME §§

DATUM DESCRIPTION

THE LOCALIZED COORDINATE SYSTEM DEVELOPED FOR THIS PROJECT IS BASED ON THE STATE PLANE COORDINATES ESTABLISHED BY NCDOT FOR MONUMENT "BD-5110-V BL1" WITH NAD 83/NSRS 2007 STATE PLANE GRID COORDINATES OF NORTHING: 495993.606(ft) EASTING: 1581580.081(ft) ELEVATION: 466.93(ft)
THE AVERAGE COMBINED GRID FACTOR USED ON THIS PROJECT (GROUND TO GRID) IS: 0.999858
THE N.C. LAMBERT GRID BEARING AND LOCALIZED HORIZONTAL GROUND DISTANCE FROM "BD-5110-V BL-1" TO -L- POT STATION 10+70.00 IS N 72° 2' 43.570" W 499.860 (ft)
ALL LINEAR DIMENSIONS ARE LOCALIZED HORIZONTAL DISTANCES
VERTICAL DATUM USED IS NAVD 88

BL-1	N 495993.606	E 1581580.081	ELEV 466.93
BL-2	N 496110.067	E 1581303.150	ELEV 458.63
BL-3	N 496167.948	E 1580964.890	ELEV 470.30

DETAIL A
LATERAL 'V' DITCH
(Not to Scale)

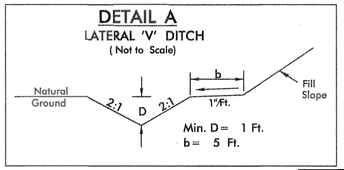

FROM STA. 10+75 TO STA. 12+43 LT.

PROJECT REFERENCE NO.	SHEET NO.
BD-5110V	UC-3
DESIGNED BY: RMS	
DRAWN BY: WSN	
CHECKED BY: RMS	
APPROVED BY:	
REVISED:	

NORTH CAROLINA DEPARTMENT OF TRANSPORTATION
UTILITIES ENGINEERING SEC.
PHONE:(919)250-4128
FAX:(919)250-4119

NORTH CAROLINA PROFESSIONAL SEAL 25960 ENGINEER REECE W. SCHILLEN
1/25/12

UTILITY CONSTRUCTION PLANS ONLY

(1) RICHARD AND MELISSA WEBB
DB 1587 PG 538

(2) GARY PAUL SMITH et al
DB 094 PG 484

(3) MARK AND NANCY WHITLEY
DB 1619 PG 726

(4) TRIPLE T HOMEBUILDERS, INC.
DB 4754 PG 124

ABANDON 100.0 LF 8" UTILITY PIPE

ABANDON 111.4 LF 8" UTILITY PIPE

W1, 104.0 LF 8" DIP WATER LINE

W2, 113.7 LF 8" DIP WATER LINE

90° HORZ. BEND

REFER TO UC-4 FOR CONNECTION DETAIL

CLASS II RIP RAP

CONCRETE FLUME

BEGIN BRIDGE -L- STA 12+15.00

END BRIDGE -L- STA 12+85.00

END SBG +06.53

BEGIN APPROACH SLAB -L- STA 12+03.00

END APPROACH SLAB -L- STA 12+97.00

BEGIN TIP PROJECT BD-5110V -L- POT 10+70.00

END TIP PROJECT BD-5110V -L- POT 14+45.00

EXISTING R/W

LATERAL 'V' DITCH SEE DETAIL A

GRAU-350

TYPE III

NEW HOPE CHURCH RD

SR 1658 NEW HOPE CHURCH RD 18' BST

S 76° 20' 49.2" E

S 63° 26' 04.4" E

TAPER TO EXIST (LT & RT)

22' (TYP)

15'

20'

30" RCP

SR 2771 CHARITY DR. BST WIDTH VARIES

PI Sta 13+78.74
Δ = 3° 08' 31.5" (RT)
D = 2° 17' 30.6"
L = 137.10'
T = 68.57'
R = 2,500.00'

PI Sta 14+98.55
Δ = 9° 46' 13.3" (RT)
D = 9° 32' 57.5"
L = 102.31'
T = 51.28'
R = 600.00'

PC Sta. 13+10.17

PCC Sta. 14+47.27

POT Sta. 10+00.00

GENERAL NOTES:

1. The proposed utility construction shall meet the applicable requirements of the NC Department of Transportation's "Standard Specifications for Roads and Structures" dated January 2012, the standards details as shown on plans, and the project special provisions for utility construction.
2. Wall blocking shall be used on existing water lines at the proposed relocation tie in points.
3. Contractor shall connect all water lines and service connections using necessary fittings.

GRAPHIC SCALES

PLANS: 20 10 0 20 40
PROFILE (HORIZONTAL): 20 10 0 20 40
PROFILE (VERTICAL): 4 2 0 4 8

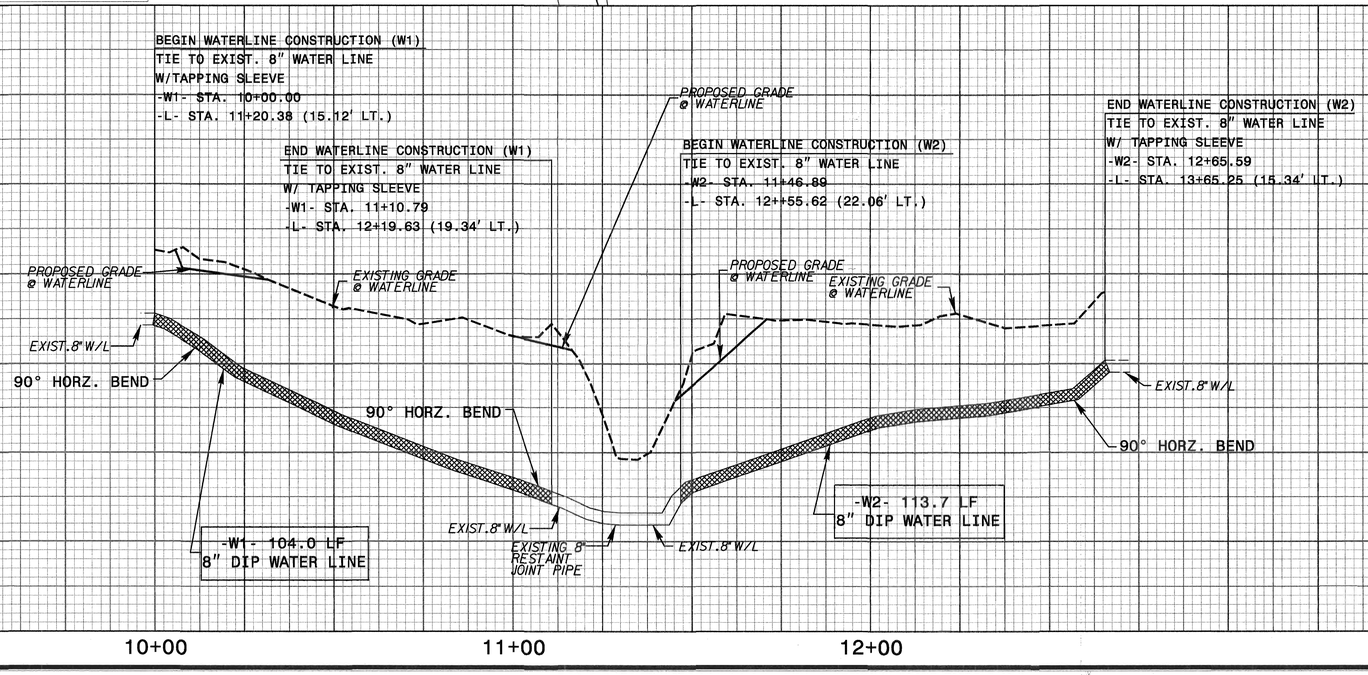

Vaughn & Melton
Consulting Engineers
Charlotte, North Carolina 704-357-0488
Asheville, North Carolina 828-253-2796
Tri-Cities, Tennessee 423-467-940
Knoxville, Tennessee 865 546-5600
Middlesboro, Kentucky 606-248-6600
Spartanburg, South Carolina 864-574-4775

Copyright © 2006 Vaughn & Melton, Inc. All Rights Reserved

I_Union37\BD5110V_utl_UC03.dgn 1/25/2012 3:48:23 PM

5/14/99

Note: Not to Scale

****S.U.E. = Subsurface Utility Engineering***

STATE OF NORTH CAROLINA
DIVISION OF HIGHWAYS

UTILITIES PLAN SHEET DETAILS

Vaughn & Melton
Consulting Engineers
Charlotte, North Carolina 704-357-0488
Asheville, North Carolina 828-253-2796
Tri-Cities, Tennessee 423-467-8401
Knoxville, Tennessee 865 646-5800
Middlesboro, Kentucky 606-248-6600
Spartanburg, South Carolina 864-574-4775

Copyright © 2006 Vaughn & Melton, Inc. All Rights Reserved

PROJECT REFERENCE NO.	SHEET NO.
BD-5110V	UC-4
DESIGNED BY: RMS	
DRAWN BY: CBC	
CHECKED BY: RMS	
APPROVED BY:	
REVISED:	

NORTH CAROLINA PROFESSIONAL ENGINEER SEAL 25060 RICHARD M. SCHMITZ 1/25/12

NORTH CAROLINA DEPARTMENT OF TRANSPORTATION
UTILITIES ENGINEERING SEC.
PHONE:(919)250-4128
FAX:(919)250-4119

UTILITY CONSTRUCTION PLANS ONLY

UTILITY CONSTRUCTION

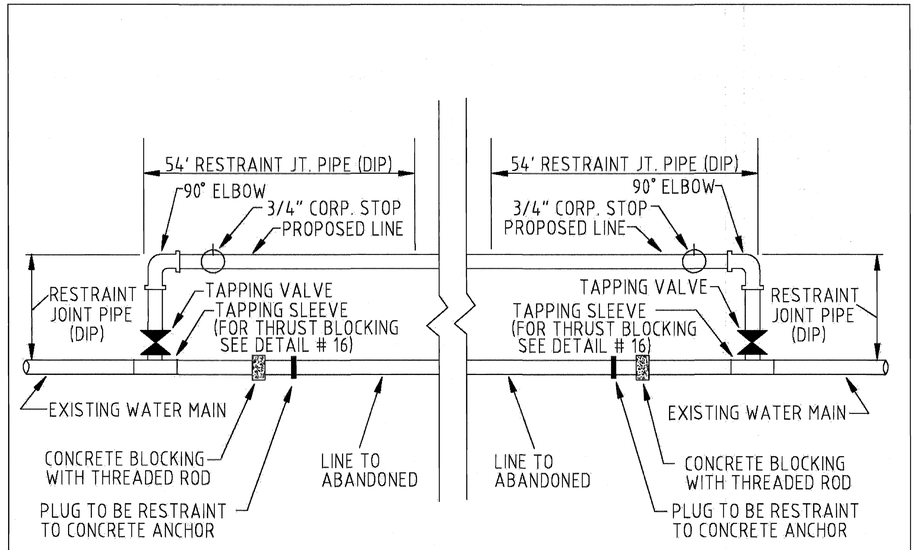

NOTE: ALL WATERMAINS ALONG EXISTING DOT ROADS MUST BE A MINIMUM DISTANCE OF A 1/1 RATIO OFF EDGE OF PAVEMENT OR BACK OF CURB.

UNION COUNTY PUBLIC WORKS DEPARTMENT UNION COUNTY, N.C.	STANDARD DETAIL WATERMAIN RELOCATION FOR SMALL WATERMAINS	SCALE: N.T.S. DATE: 3-8-11	27B

T.I.P. NO.	SHEET NO.
BD-5110V	UO-1

See Sheet 1A For Index of Sheets
See Sheet 1B For Standard Symbology Sheet

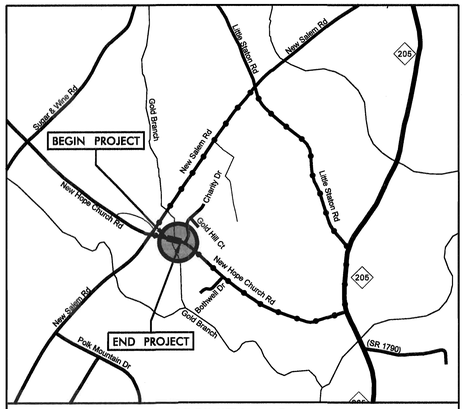

VICINITY MAP N.T.S.

STATE OF NORTH CAROLINA
DIVISION OF HIGHWAYS

UTILITIES BY OTHERS PLANS
UNION COUNTY

LOCATION: BRIDGE #037 OVER GOLD BRANCH ON SR 1658 (NEW HOPE CHURCH ROAD)

TYPE OF WORK: AERIAL POWER & TELEPHONE

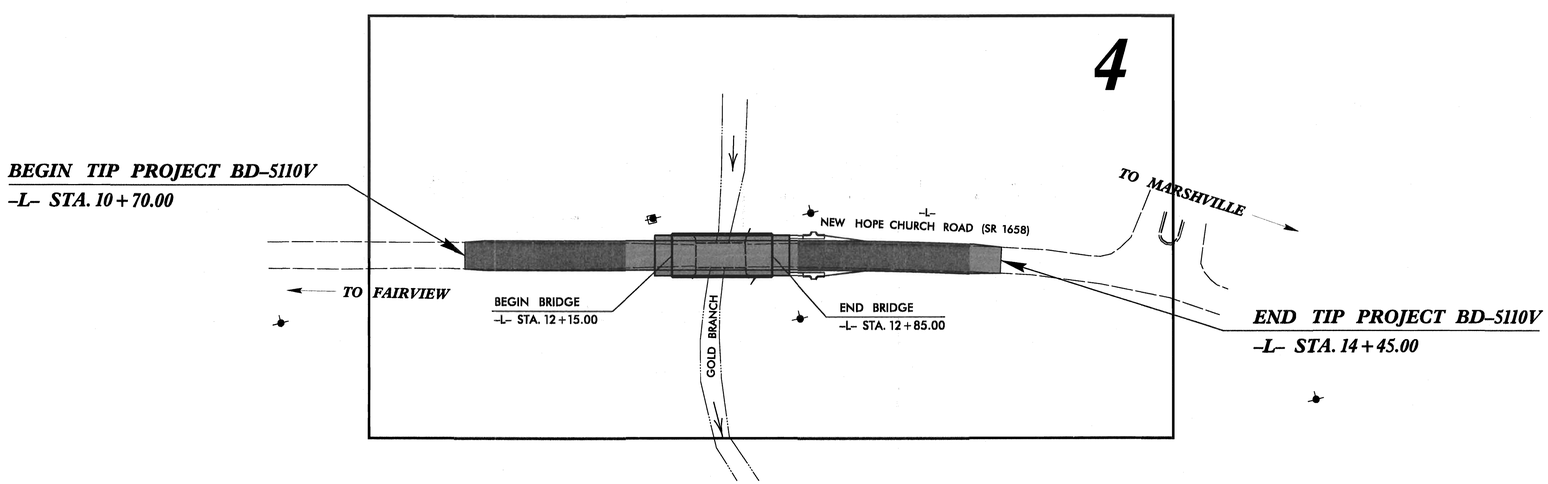

GRAPHIC SCALES

30 15 0 30 60
PLANS

INDEX OF SHEETS

SHEET NO.	DESCRIPTION
UO-1	TITLE SHEET
UO-2	UTILITY BY OTHERS PLAN SHEETS

UTILITY OWNERS ON PROJECT

(1) TELEPHONE - WINDSTREAM COMMUNICATIONS
(2) POWER - UNION POWER COOPERATIVE

SEAL
NORTH CAROLINA PROFESSIONAL SEAL 26980 ENGINEER REECE M. SCHULER
1/25/12

V&M
Vaughn & Melton
Consulting Engineers
3089-L Beam Road
Charlotte, NC 28217
704-357-0488

STATE OF NORTH CAROLINA DEPARTMENT OF TRANSPORTATION

PREPARED IN THE OFFICE OF:
DIVISION OF HIGHWAYS
UTILITIES ENGINEERING SECTION
1591 MAIL SERVICES CENTER
RALEIGH NC 27699-1591
PHONE (919) 250-4128
FAX (919) 250-4119

Roger Worthington, P.E.	UTILITIES SECTION ENGINEER
Xxxxx Xxxxx, P.E.	UTILITIES SQUAD LEADER PROJECT ENGINEER
Reece Schuler, PE	UTILITIES PROJECT DESIGNER

TIP PROJECT: BD-5110V

09/08/99

$$$$$SYSTIME$$$$$
$$$$$DGN$$$$$
$$$$$USERNAME$$$$$

..\BD-5110V_UI_UO1_lab.dgn 1/25/2012 3:27:09 PM

PROJECT REFERENCE NO.	SHEET NO.
BD-5110V	U0-2

UTILITIES BY OTHERS

NOTE:
ALL PROPOSED UTILITY WORK SHOWN ON THIS SHEET WILL BE DONE BY OTHERS

V&M
Vaughn & Melton
Consulting Engineers
Asheville, North Carolina 828-253-2796
Tri-Cities, Tennessee 423-467-8401
Knoxville, Tennessee 865-546-5800
Middlesboro, Kentucky 606-248-6600
Spartanburg, South Carolina 864-574-4775
Charlotte, North Carolina 704-357-0488

Copyright © 2006 Vaughn & Melton, Inc. All Rights Reserved

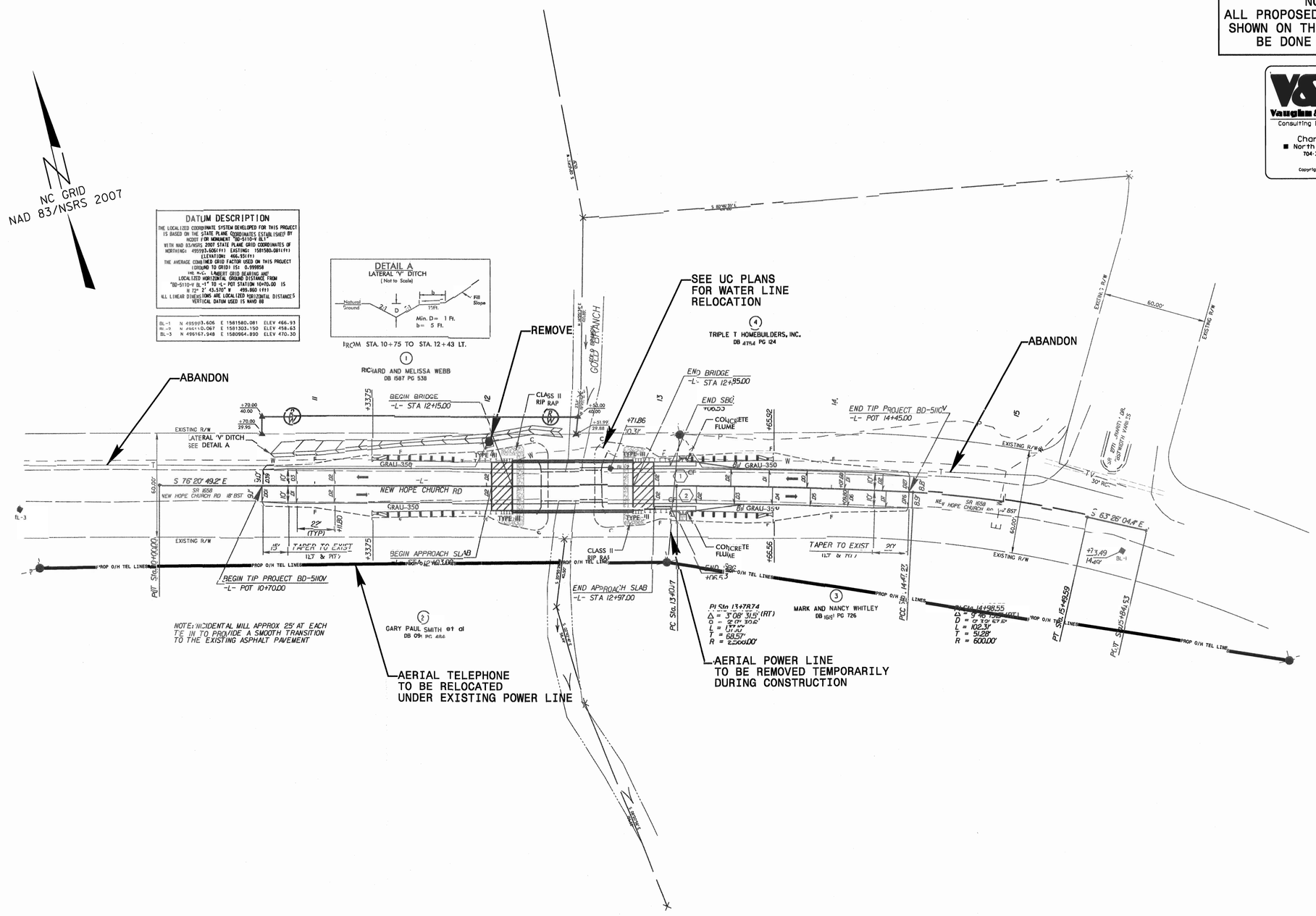

REVISIONS

8/17/99

$$$$SYSTIME$$$$
$$$$DGN$$$$
$$$$USERNAME$$$$

...\BD-5110V_U8_UO2_psh.dgn 1/25/2012 3:31:09 PM

TIP PROJECT: BD-5110V

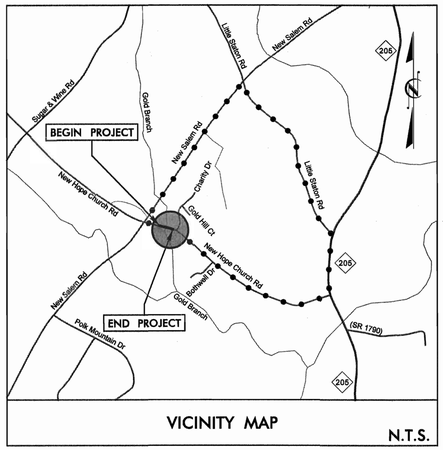

VICINITY MAP N.T.S.

EROSION CONTROL PLANS

STATE OF NORTH CAROLINA
DIVISION OF HIGHWAYS
PLAN FOR PROPOSED
HIGHWAY EROSION CONTROL
UNION COUNTY

LOCATION: BRIDGE #037 OVER GOLD BRANCH ON SR 1658 (NEW HOPE CHURCH ROAD)

STATE	STATE PROJECT REFERENCE NO.	SHEET NO.	TOTAL SHEETS
N.C.	BD-5110V	EC-1	4

STATE PROJ. NO.	F. A. PROJ. NO.	DESCRIPTION
45356.1.22	BRZ-1658(1)	P.E.
45356.2.22	BRZ-1658(1)	R /W & UTILITIES
45356.3.22	BRZ-1658(1)	CONST.

NSRS 2007 · NAD 83

EC-4

BEGIN TIP PROJECT BD-5110V
-L- STA. 10+70.00

END TIP PROJECT BD-5110V
-L- STA. 14+45.00

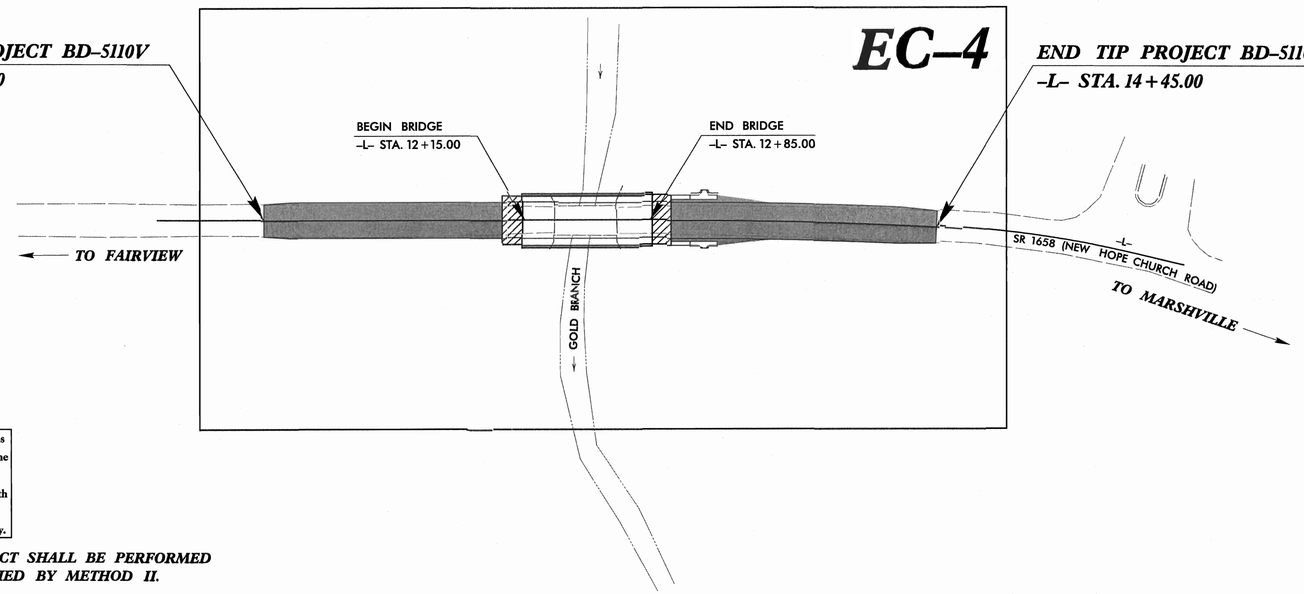

EROSION AND SEDIMENT CONTROL MEASURES

The following roadway english standards as appear in "Roadway Standard Drawings"- Roadway Design Unit - N.C. Department of Transportation - Raleigh, N.C., dated January 2012 and the latest revison thereto are applicable to this project and by reference hereby are considered a part of these plans.

Std. #	Description	Symbol
1605.01	Temporary Silt Fence	
1606.01	Special Sediment Control Fence	
1607.01	Gravel Construction Entrance	
1622.01	Temporary Berms and Slope Drains	
1630.01	Riser Basin	
1630.03	Temporary Silt Ditch	TSD
1630.04	Stilling Basin	
1630.05	Temporary Diversion	TD
1630.06	Special Stilling Basin	
1632.01	Rock Inlet Sediment Trap Type A	A
1632.02	Rock Inlet Sediment Trap Type B	B
1632.03	Rock Inlet Sediment Trap Type C	C
1633.01	Temporary Rock Silt Check Type-A	
1633.02	Temporary Rock Silt Check Type-B	
1634.01	Temporary Rock Sediment Dam Type-A	
1634.02	Temporary Rock Sediment Dam Type-B	
1635.01	Rock Pipe Inlet Sediment Trap Type-A	
1635.02	Rock Pipe Inlet Sediment Trap Type-B	
SP	Silt Basin Type B	
SP	Skimmer Basin	
SP	Tiered Skimmer Basin	
SP	Infiltration Basin	
SP	Wattle	
SP	Coir Fiber Matting	

These Erosion and Sediment Control Plans comply with the regulations set forth by the NCG010000 general construction permit effective August 3, 2011 issued by the North Carolina Department of Environment and Natural resources Division of Water Quality.

CLEARING ON THIS PROJECT SHALL BE PERFORMED TO THE LIMITS ESTABLISHED BY METHOD II.

ENVIRONMENTALLY SENSITIVE AREA(S) EXIST ON THIS PROJECT

Refer To E. C. Special Provisions for Special Considerations.

CONTRACT:

EROSION CONTROL PLANS
352012

GRAPHIC SCALE

20 10 0 20 40

PLANS

ROADSIDE ENVIRONMENTAL UNIT
DIVISION OF HIGHWAYS
STATE OF NORTH CAROLINA

Level III Designer
Davin Morrison, PE #3126

NORTH CAROLINA PROFESSIONAL SEAL 036053 ENGINEER DAVIN C. MORRISON
3/5/12

Prepared In the Office of:

STV/RALPH WHITEHEAD ASSOCIATES, INC.
1000 West Morehead St., Ste. 200, Charlotte NC, 28208
NC License Number F-0991
FOR NORTH CAROLINA DEPARTMENT OF TRANSPORTATION

2012 STANDARD SPECIFICATIONS

PROJECT REFERENCE NO.	SHEET NO.
BD-5110V	EC-2
RW SHEET NO.	

STV / Ralph Whitehead Associates, Inc.
1000 West Morehead St., Ste. 200
Charlotte, NC 28208
NC License Number F-0991

HYDRAULICS ENGINEER

SEAL 038053 ENGINEER JOHN C. MORRISON NORTH CAROLINA PROFESSIONAL 3/5/12

WATTLE WITH POLYACRYLAMIDE DETAIL

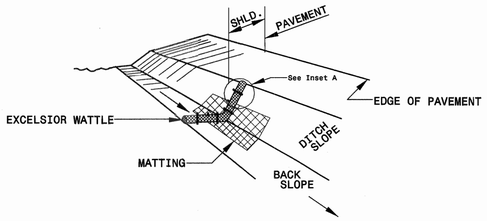

ISOMETRIC VIEW

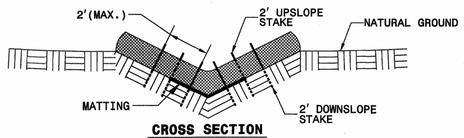

CROSS SECTION VEE DITCH

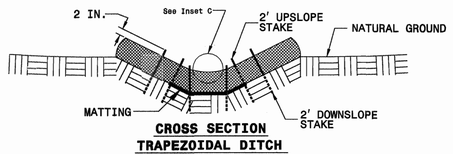

CROSS SECTION TRAPEZOIDAL DITCH

NOTES:

USE MINIMUM 12 IN. DIAMETER EXCELSIOR WATTLE.

USE 2 FT. WOODEN STAKES WITH A 2 IN. BY 2 IN. CROSS SECTION.

ONLY INSTALL WATTLE(S) TO A HEIGHT IN DITCH SO FLOW WILL NOT WASH AROUND WATTLE AND SCOUR DITCH SLOPES AND AS DIRECTED.

INSTALL A MINIMUM OF 2 UPSLOPE STAKES AND 4 DOWNSLOPE STAKES AT AN ANGLE TO WEDGE WATTLE TO BOTTOM OF DITCH.

PROVIDE STAPLES MADE OF 0.125 IN. DIAMETER STEEL WIRE FORMED INTO A U SHAPE NOT LESS THAN 12" IN LENGTH.

INSTALL STAPLES APPROXIMATELY EVERY 1 LINEAR FOOT ON BOTH SIDES OF WATTLE AND AT EACH END TO SECURE IT TO THE SOIL.

INSTALL MATTING IN ACCORDANCE WITH SECTION 1631 OF THE STANDARD SPECIFICATIONS.

PRIOR TO POLYACRYLAMIDE (PAM) APPLICATION, OBTAIN A SOIL SAMPLE FROM PROJECT LOCATION, AND FROM OFFSITE MATERIAL, AND ANALYZE FOR APPROPRIATE PAM FLOCCULANT TO BE APPLIED TO EACH WATTLE.

INITIALLY APPLY 3.5 OUNCES OF ANIONIC OR NEUTRALLY CHARGED POLYACRYLAMIDE (PAM) OVER WATTLE WHERE WATER WILL FLOW AND AFTER EVERY RAINFALL EVENT THAT IS EQUAL TO OR EXCEEDS 0.50 IN.

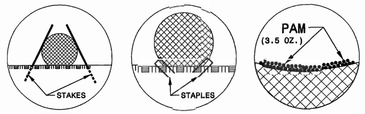

INSET A INSET B INSET C

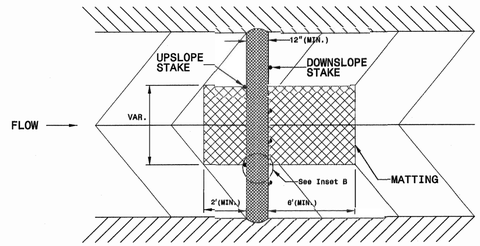

TOP VIEW

WATTLE DETAIL

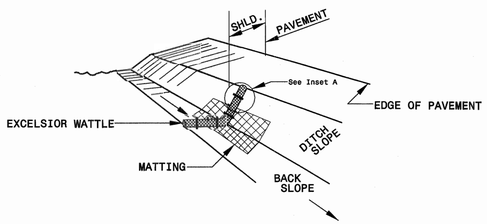

ISOMETRIC VIEW

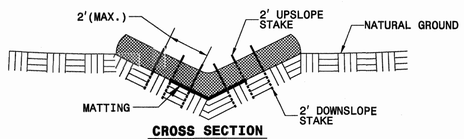

CROSS SECTION VEE DITCH

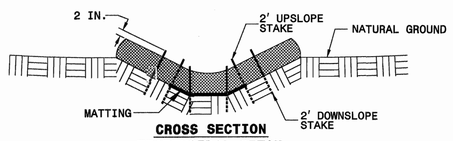

CROSS SECTION TRAPEZOIDAL DITCH

NOTES:

USE MINIMUM 12 IN. DIAMETER EXCELSIOR WATTLE.

USE 2 FT. WOODEN STAKES WITH A 2 IN. BY 2 IN. CROSS SECTION.

ONLY INSTALL WATTLE(S) TO A HEIGHT IN DITCH SO FLOW WILL NOT WASH AROUND WATTLE AND SCOUR DITCH SLOPES AND AS DIRECTED.

INSTALL A MINIMUM OF 2 UPSLOPE STAKES AND 4 DOWNSLOPE STAKES AT AN ANGLE TO WEDGE WATTLE TO BOTTOM OF DITCH.

PROVIDE STAPLES MADE OF 0.125 IN. DIAMETER STEEL WIRE FORMED INTO A U SHAPE NOT LESS THAN 12" IN LENGTH.

INSTALL STAPLES APPROXIMATELY EVERY 1 LINEAR FOOT ON BOTH SIDES OF WATTLE AND AT EACH END TO SECURE IT TO THE SOIL.

INSTALL MATTING IN ACCORDANCE WITH SECTION 1631 OF THE STANDARD SPECIFICATIONS.

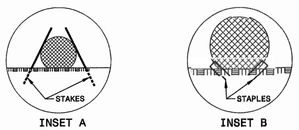

INSET A INSET B

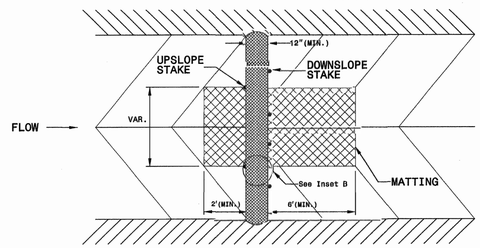

TOP VIEW

MATTING INSTALLATION DETAIL

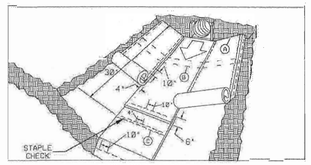

MATTING IN DITCHES

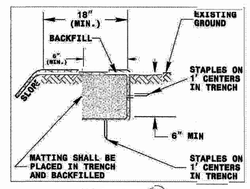

DIAGRAM (A)

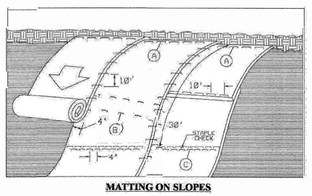

MATTING ON SLOPES

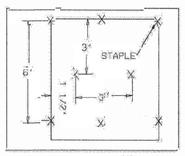

DIAGRAM (B)

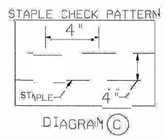

DIAGRAM (C)

NOTES:

THIS DETAIL APPLIES TO STRAW, EXCELSIOR, AND PERMANENT SOIL REINFORCEMENT MAT (PSRM) INSTALLATION.

STAPLES SHALL BE NO. 11 GAUGE STEEL WIRE FORMED INTO A "U" SHAPE WITH A MINIMUM THROAT WIDTH OF 1 INCH AND NOT LESS THAN 6 INCHES IN LENGTH.

r:\roadway\proj\ec\BD5110V_rdy_EC02.dgn

3/5/2012

PROJECT REFERENCE NO.	SHEET NO.
BD-5110V	EC-3
RW SHEET NO.	

STV / Ralph Whitehead Associates, Inc.
1000 West Morehead St., Ste. 200
Charlotte, NC 28208
NC License Number F-0991

HYDRAULICS ENGINEER

NORTH CAROLINA PROFESSIONAL SEAL 038053 ENGINEER JOHN C. MORRISON
3/5/12

DIVISION OF HIGHWAYS
STATE OF NORTH CAROLINA

SOIL STABILIZATION SUMMARY SHEET

MATTING FOR EROSION CONTROL (FOR SLOPE STABILIZATION)

CONST SHEET NO.	LINE	FROM STATION	TO STATION	SIDE	ESTIMATE (SY)
				SUBTOTAL	410
MISCELLANEOUS MATTING TO BE INSTALLED AS DIRECTED BY THE ENGINEER					45
				TOTAL	455
				SAY	455

COIR FIBER MATTING (FOR FLOODPLAIN BENCH)

CONST SHEET NO.	LINE	FROM STATION	TO STATION	SIDE	ESTIMATE (SY)
				SUBTOTAL	165
MISCELLANEOUS MATTING TO BE INSTALLED AS DIRECTED BY THE ENGINEER					20
				TOTAL	185
				SAY	185

MATTING FOR EROSION CONTROL (FOR DITCH STABILIZATION)

CONST SHEET NO.	LINE	FROM STATION	TO STATION	SIDE	ESTIMATE (SY)
4	-L- TSD	10+70	12+28	RT	75
4	-L- TSD	12+72	14+44	LT	80
4	-L- TSD	12+72	14+44	RT	80
				SUBTOTAL	235
MISCELLANEOUS MATTING TO BE INSTALLED AS DIRECTED BY THE ENGINEER					25
				TOTAL	260
				SAY	260

PERMANENT SOIL REINFORCEMENT MATTING (FOR DITCH STABILIZATION)

CONST SHEET NO.	LINE	FROM STATION	TO STATION	SIDE	ESTIMATE (SY)
4	-L- V-DITCH	10+50	12+45	LT	130
				SUBTOTAL	130
MISCELLANEOUS MATTING TO BE INSTALLED AS DIRECTED BY THE ENGINEER					15
				TOTAL	145
				SAY	145

3/5/2012 r:\roadway\proj\ec\BD5110V_rdy_EC03.dgn

PROJECT REFERENCE NO.	SHEET NO.
BD-5110V	EC-4
R/W SHEET NO.	

STV / Ralph Whitehead Associates, Inc.
1000 West Morehead St., Ste. 200
Charlotte, NC 28208
NC License Number F-0991

HYDRAULICS ENGINEER

NORTH CAROLINA PROFESSIONAL SEAL 038053 ENGINEER JUSTIN C. MORRISON
3/5/12

NAD 83 NSRS 2007

TRIPLE T HOMEBUILDERS, INC.
DB 4754 PG 124

RICHARD AND MELISSA WEBB
DB 1587 PG 538

GOLD BRANCH

EXISTING R/W

60.00'

SR 1658
NEW HOPE CHURCH RD 18' BST

SR 2771 CHARITY DR.
BST WIDTH VARIES

30" RCP

TEMP. WATTLE W/PAM
WEIR HEIGHT=2.75'

Place Matting for Erosion Control on Slope as Work Allows.

TEMP. WATTLE
WEIR HEIGHT=2.75'

Place Coir Fiber Matting on Floodplain Bench.

TEMP. WATTLE
WEIR HEIGHT=1.75'

TEMP. WATTLE W/PAM
WEIR HEIGHT=1.75'

TSD

TEMP. SILT DITCH (TYP.)
D=1.0' W/2:1 SIDE SLOPES

TEMP. WATTLE W/PAM
WEIR HEIGHT=2.5'

TEMP. WATTLE
WEIR HEIGHT=2.5'

TEMP. SILT
FENCE (TYP.)

FLOATING
TURBIDITY
CURTAIN

TEMP. WATTLE
WEIR HEIGHT=1.5'

TEMP. WATTLE W/PAM
WEIR HEIGHT=1.5'

Place Matting for Erosion Control on Slope as Work Allows.

TEMP. WATTLE W/PAM
WEIR HEIGHT=1.5'

ALL POWER POLES ARE UNION POWER CORPORATION

GARY PAUL SMITH et al
DB 094 PG 484

MARK AND NANCY WHITLEY
DB 1619 PG 726

BL-1

NOTES: ANY DEVIATION FROM OPTIONS GIVEN WILL REQUIRE PRIOR APPROVAL BY ENGINEER.

ADDITIONAL EROSION CONTROL DEVICES MAY NEED TO BE INSTALLED AS DIRECTED BY THE ENGINEER.

R:\Roadway\Proj\EC\BD5110V_rdy_EC04.dgn

3/6/2012

8/23/99

0 2.5 5	PROJ. REFERENCE NO.	SHEET NO.
	BD-5110V	X-1

75 70 65 60 55 50 45 40 35 30 25 20 15 10 5 0 5 10 15 20 25 30 35 40 45 50 55 60 65 70 75

460 455 450

459.51
0.020 0.020
449.47

12+50

BEGIN BRIDGE 12+13.88

465 460 455

460.09
0.020 0.020
459.66
S.S. 456.90
2:1 2:1 2:1 2:1
455.84
S.S. 459.03

12+00

465 460

461.31
0.020 0.020
461.14
S.S. 460.09
2:1 2:1 2:1 2:1
459.03
S.S. 460.25

11+50

470 465

463.16
0.025 0.015
463.01
S.S. 464.26
2:1 4:1 2:1
461.20
S.S. 462.72

11+00

475 470 465

S.S. 468.99
2:1 4:1
463.78
465.22

10+50

NOTE: Approximate quantities only. Unclassified Excavation, Borrow Excavation, Fine Grading, Clearing and Grubbing, Breaking of Existing Pavement, and Removal of Existing Pavement will be paid for at the contract lump sum price for "Grading."

75 70 65 60 55 50 45 40 35 30 25 20 15 10 5 0 5 10 15 20 25 30 35 40 45 50 55 60 65 70 75

3/5/2012
r:\roadway\Xsc\BD5110V_rdy_xpl_L.dgn
drakeac

8/23/99

0 2.5 5	PROJ. REFERENCE NO.	SHEET NO.
	BD-5110V	X-2

75 70 65 60 55 50 45 40 35 30 25 20 15 10 5 0 5 10 15 20 25 30 35 40 45 50 55 60 65 70 75

470 465 460 455

462.14

14+50

465 460 455

460.33

0.007 0.056

2:1 2:1

460.18

S.S. 459.81 S.S. 458.70

14+00

465 460 455

459.22

0.016 0.033

2:1 2:1

458.95

S.S. 457.53 S.S. 456.57

13+50

465 460 455

459.02

0.020 0.020

2:1 2:1

458.63

S.S. 457.97 S.S. 456.92

13+00

END BRIDGE 12 | 86.13

75 70 65 60 55 50 45 40 35 30 25 20 15 10 5 0 5 10 15 20 25 30 35 40 45 50 55 60 65 70 75

3/5/2012
P:\roadway\Xsc\BD5110V_rdy_xpLL.dgn
drakeac

FA PROJECT NO.
BRZ-1658(1)

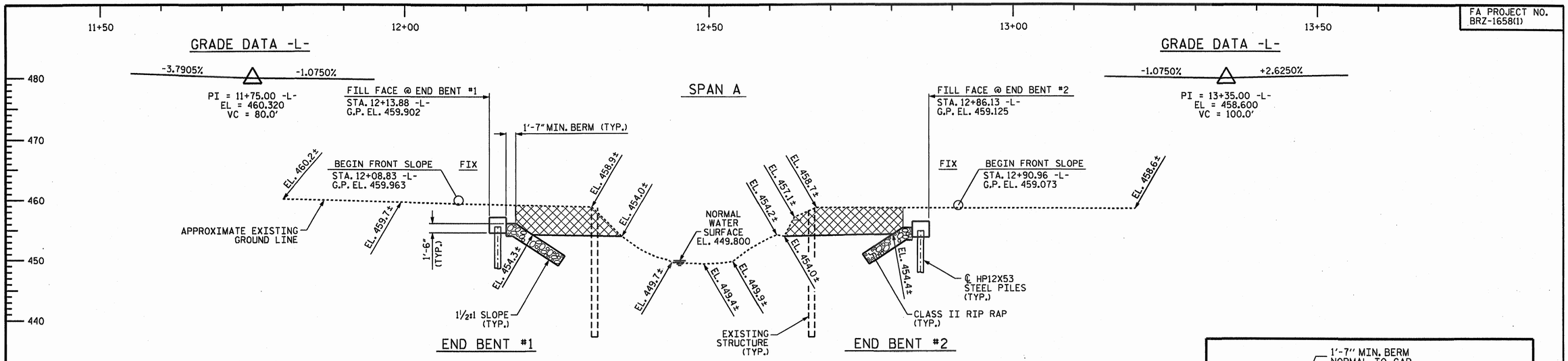

SECTION ALONG -L-

UNCLASSIFIED STRUCTURE EXCAVATION

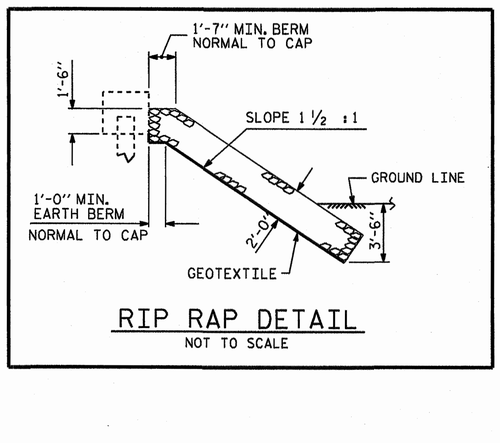

RIP RAP DETAIL

NOT TO SCALE

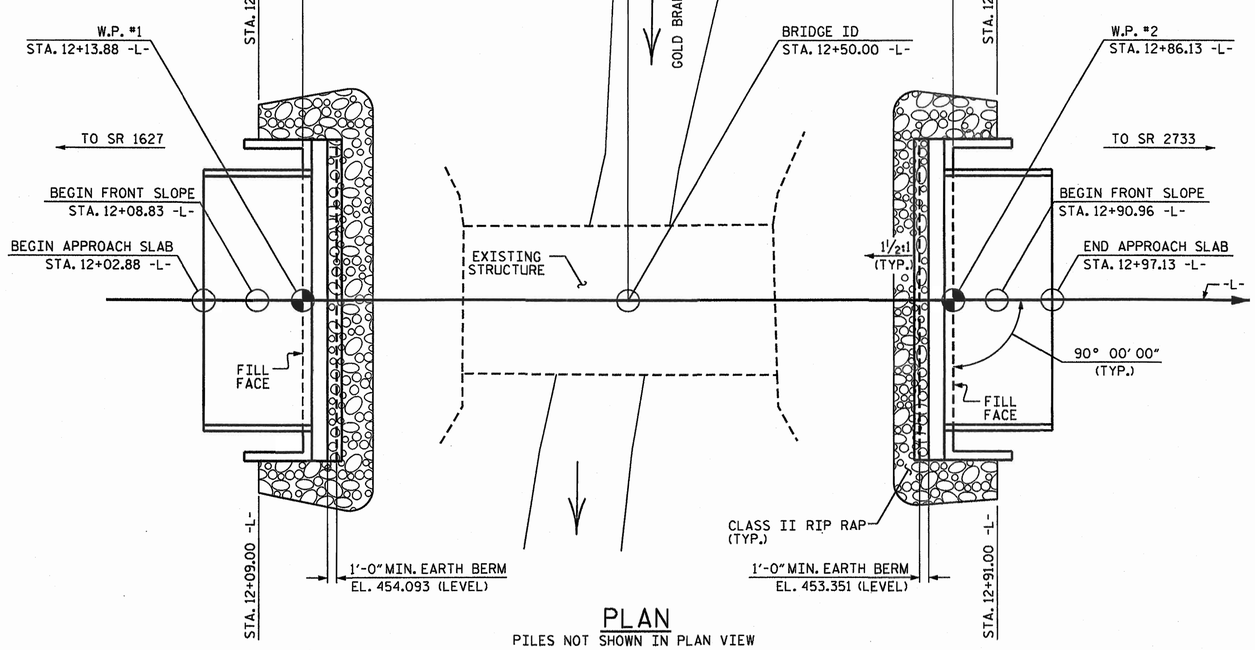

PLAN

PILES NOT SHOWN IN PLAN VIEW

PROJECT NO. BD-5110V

UNION COUNTY

STATION: 12+50.00 -L-

SHEET 1 OF 2 REPLACES BRIDGE #37

STATE OF NORTH CAROLINA
DEPARTMENT OF TRANSPORTATION
RALEIGH

GENERAL DRAWING

BRIDGE ON SR-1658
(NEW HOPE CHURCH ROAD)
OVER GOLD BRANCH
BETWEEN SR 1627 & SR 2733

REVISIONS						SHEET NO.
NO.	BY:	DATE:	NO.	BY:	DATE:	S-1
1			3			TOTAL SHEETS
2			4			12

NORTH CAROLINA PROFESSIONAL SEAL 23371 ENGINEER PAUL A PATEL
1/13/12

NORTH CAROLINA PROFESSIONAL SEAL 23371 ENGINEER PAUL A PATEL
1/13/12

DRAWN BY : R. L. CHESSON DATE : 2011 OCT
CHECKED BY : M.K. BEARD DATE : 11/4/11

13-JAN-2012 09:53
R:\Structures\Plans\BD-5110V_SD_GD.dgn
vpatel

NOTES

ASSUMED LIVE LOAD = HL-93 OR ALTERNATE LOADING.

FOR OTHER DESIGN DATA AND GENERAL NOTES, SEE SHEET SN.

FOR EROSION CONTROL MEASURES SEE EROSION CONTROL PLANS.

THIS BRIDGE HAS BEEN DESIGNED IN ACCORDANCE WITH THE AASHTO LRFD BRIDGE DESIGN SPECIFICATIONS.

THE EXISTING STRUCTURE CONSISTING OF 1 SPAN @ 32'-6" WITH A TIMBER DECK ON I-BEAMS AND A CLEAR ROADWAY OF 17.2 FT. ON ABUTMENTS AND LOCATED AT THE PROPOSED SITE SHALL BE REMOVED.

REMOVAL OF THE EXISTING BRIDGE SHALL BE PERFORMED SO AS NOT TO ALLOW DEBRIS TO FALL INTO THE WATER. THE CONTRACTOR SHALL REMOVE THE BRIDGE AND SUBMIT PLANS FOR DEMOLITION IN ACCORDANCE WITH ARTICLE 402-2 OF THE STANDARD SPECIFICATIONS.

THE MATERIAL SHOWN IN THE CROSS-HATCHED AREA SHALL BE EXCAVATED FOR A DISTANCE OF 25 FT. EACH SIDE OF CENTERLINE ROADWAY AS DIRECTED BY THE ENGINEER. THIS WORK WILL BE PAID FOR AT THE CONTRACT LUMP SUM PRICE FOR UNCLASSIFIED STRUCTURE EXCAVATION. SEE SECTION 412 OF THE STANDARD SPECIFICATIONS.

THE SUBSTRUCTURE OF THE EXISTING BRIDGE INDICATED ON THE PLANS IS FROM THE BEST INFORMATION AVAILABLE. SINCE THIS INFORMATION IS SHOWN FOR THE CONVENIENCE OF THE CONTRACTOR, THE CONTRACTOR SHALL HAVE NO CLAIM WHATSOEVER AGAINST THE DEPARTMENT OF TRANSPORTATION FOR ANY DELAYS OR ADDITIONAL COST INCURRED BASED ON DIFFERENCES BETWEEN THE EXISTING BRIDGE SUBSTRUCTURE SHOWN ON THE PLANS AND THE ACTUAL CONDITIONS AT THE PROJECT SITE.

FOR UTILITY INFORMATION, SEE ROADWAY PLANS.

THE BRIDGE IS LOCATED IN SEISMIC ZONE 1.

ASPHALT WEARING SURFACE IS INCLUDED IN ROADWAY QUANTITY ON ROADWAY PLANS.

THIS STRUCTURE HAS BEEN DESIGNED IN ACCORDANCE WITH HEC 18, "EVALUATING SCOUR AT BRIDGES", MAY, 2001.

THE CONTRACTOR SHALL PROVIDE INDEPENDENT ASSURANCE SAMPLES OF REINFORCING STEEL AS FOLLOWS: FOR PROJECTS REQUIRING UP TO 400 TONS OF REINFORCING STEEL, ONE 30 INCH SAMPLE OF EACH SIZE BAR USED, AND FOR PROJECTS REQUIRING OVER 400 TONS OF REINFORCING STEEL, TWO 30 INCH SAMPLES OF EACH SIZE BAR USED. THE BARS FROM WHICH THE SAMPLES ARE TAKEN MUST THEN BE SPLICED WITH REPLACEMENT BARS OF THE SIZE AND LENGTH OF THE SAMPLE, PLUS A MINIMUM LAP SPLICE OF THIRTY BAR DIAMETERS. PAYMENT FOR THE SAMPLES OF REINFORCING STEEL SHALL BE CONSIDERED INCIDENTAL TO VARIOUS PAY ITEMS.

INASMUCH AS THE PAINT SYSTEM ON THE EXISTING STRUCTURAL STEEL CONTAINS LEAD, THE CONTRACTOR'S ATTENTION IS DIRECTED TO ARTICLE 107-1 OF THE STANDARD SPECIFICATIONS. ANY COSTS RESULTING FROM COMPLIANCE WITH APPLICABLE STATE OR FEDERAL REGULATIONS PERTAINING TO HANDLING OF MATERIALS CONTAINING LEAD BASED PAINT SHALL BE INCLUDED IN THE BID PRICE FOR "REMOVAL OF EXISTING STRUCTURE AT STATION 12+50.00-L-."

FOR SUBMITTAL OF WORKING DRAWINGS, SEE SPECIAL PROVISIONS.

FOR FALSEWORK AND FORMWORK, SEE SPECIAL PROVISIONS.

FOR CRANE SAFETY, SEE SPECIAL PROVISIONS.

FOR GROUT FOR STRUCTURES, SEE SPECIAL PROVISIONS.

FOR PILES, SEE SECTION 450 OF THE STANDARD SPECIFICATIONS.

PILES AT END BENT NO. 1 ARE DESIGNED FOR A FACTORED RESISTANCE OF 100 TONS PER PILE.

DRIVE PILES AT END BENT NO. 1 TO A REQUIRED DRIVING RESISTANCE OF 167 TONS PER PILE.

PILES AT END BENT NO. 2 ARE DESIGNED FOR A FACTORED RESISTANCE OF 100 TONS PER PILE.

DRIVE PILES AT END BENT NO. 2 TO A REQUIRED DRIVING RESISTANCE OF 167 TONS PER PILE.

BENCH MARK: NCDOT MONUMENT BD-5110V BL-2,
BASELINE POINT: 12+71.86 -L-, 10.31' LT, ELEV. 458.630

HYDRAULIC DATA

DESIGN DISCHARGE	=	670 C.F.S.
FREQUENCY OF DESIGN FLOOD	=	25 YR.
DESIGN HIGH WATER ELEVATION	=	455.510
DRAINAGE AREA	=	1.7 SQ.MI.
BASE DISCHARGE (Q100)	=	1040 C.F.S.
BASE HIGH WATER ELEVATION	=	456.620

OVERTOPPING FLOOD DATA

OVERTOPPING DISCHARGE	=	1599+ C.F.S.
FREQUENCY OF OVERTOPPING FLOOD	=	500+ YR.
OVERTOPPING FLOOD ELEVATION	=	459.030

TOTAL BILL OF MATERIAL

	REMOVAL OF EXISTING STRUCTURE	UNCLASSIFIED STRUCTURE EXCAVATION	CLASS A CONCRETE	BRIDGE APPROACH SLABS	REINFORCING STEEL	HP12X53 STEEL PILES		VERTICAL CONCRETE BARRIER RAIL	RIP RAP CLASS II (2'-0" THICK)	GEOTEXTILE FOR DRAINAGE	ELASTOMERIC BEARINGS	3'-0" X 2'-0" PRESTRESSED CONCRETE CORED SLABS	
	LUMP SUM	LUMP SUM	CU.YDS.	LUMP SUM	LBS.	NO.	LIN.FT.	LIN.FT.	TONS	SQ. YDS.	LUMP SUM	No.	LIN.FT.
SUPERSTRUCTURE	LUMP SUM	LUMP SUM		LUMP SUM				140.25			LUMP SUM	10	700.00
END BENT #1			13.3		1977	5	65		40	45			
END BENT #2			13.3		1977	5	100		30	35			
TOTAL	LUMP SUM	LUMP SUM	26.6	LUMP SUM	3954	10	165	140.25	70	80	LUMP SUM	10	700.00

PROJECT NO. BD-5110V

UNION COUNTY

STATION: 12+50.00 -L-

SHEET 2 OF 2

STATE OF NORTH CAROLINA
DEPARTMENT OF TRANSPORTATION
RALEIGH

STRUCTURE
TOTAL BILL OF MATERIAL
AND
STRUCTURE NOTES

NORTH CAROLINA PROFESSIONAL SEAL 23371 ENGINEER VIPUL A. PATEL
1/13/12

REVISIONS						SHEET NO.
NO.	BY:	DATE:	NO.	BY:	DATE:	S-2
1			3			TOTAL SHEETS
2			4			12

DRAWN BY : R. L. CHESSON DATE : 2011 OCT
CHECKED BY : M.K. BEARD DATE : 11/4/11

13-JAN-2012 09:52
R:\Structures\Plans\BD-5110V_SD_GD.dgn
vpatel

LOAD AND RESISTANCE FACTOR RATING (LRFD) SUMMARY FOR PRESTRESSED CONCRETE GIRDERS

LEVEL		VEHICLE	WEIGHT (W) (TONS)	CONTROLLING LOAD RATING	MINIMUM RATING FACTORS (RF)	TONS = W X RF	STRENGTH I LIMIT STATE										SERVICE III LIMIT STATE						COMMENT NUMBER
								MOMENT					SHEAR					MOMENT						
							LIVELOAD FACTORS	DISTRIBUTION FACTORS (DF)	RATING FACTOR	SPAN	GIRDER LOCATION	DISTANCE FROM LEFT END OF SPAN (ft)	DISTRIBUTION FACTORS (DF)	RATING FACTOR	SPAN	GIRDER LOCATION	DISTANCE FROM LEFT END OF SPAN (ft)	LIVELOAD FACTORS	DISTRIBUTION FACTORS (DF)	RATING FACTOR	SPAN	GIRDER LOCATION	DISTANCE FROM LEFT END OF SPAN (ft)	
DESIGN LOAD RATING		HL-93(Inv)	N/A	**1**	1.006	--	1.75	0.273	1.03	70'	EL	34.5	0.507	1.32	70'	EL	6.9	0.80	0.273	**1.01**	70'	EL	**34.5**	
		HL-93(Opr)	N/A	--	1.341	--	1.35	0.273	1.34	70'	EL	34.5	0.507	1.72	70'	EL	6.9	N/A	--	--	--	--	--	
		HS-20(Inv)	36.000	**2**	1.306	47.02	1.75	0.273	1.34	70'	EL	34.5	0.507	1.65	70'	EL	6.9	0.80	0.273	**1.31**	70'	EL	**34.5**	
		HS-20(Opr)	36.000	--	1.74	62.64	1.35	0.273	1.74	70'	EL	34.5	0.507	2.14	70'	EL	6.9	N/A	--	--	--	--	--	
LEGAL LOAD RATING	SV	SNSH	13.500	--	2.917	39.379	1.4	0.273	3.75	70'	EL	34.5	0.507	4.87	70'	EL	6.9	0.80	0.273	2.92	70'	EL	34.5	
		SNGARBS2	20.000	--	2.187	43.741	1.4	0.273	2.81	70'	EL	34.5	0.507	3.47	70'	EL	6.9	0.80	0.273	2.19	70'	EL	34.5	
		SNAGRIS2	22.000	--	2.077	45.69	1.4	0.273	2.67	70'	EL	34.5	0.507	3.23	70'	EL	6.9	0.80	0.273	2.08	70'	EL	34.5	
		SNCOTTS3	27.250	--	1.452	39.565	1.4	0.273	1.87	70'	EL	34.5	0.507	2.43	70'	EL	6.9	0.80	0.273	1.45	70'	EL	34.5	
		SNAGGRS4	34.925	--	1.218	42.554	1.4	0.273	1.57	70'	EL	34.5	0.507	2.03	70'	EL	6.9	0.80	0.273	1.22	70'	EL	34.5	
		SNS5A	35.550	--	1.191	42.346	1.4	0.273	1.53	70'	EL	34.5	0.507	2.06	70'	EL	6.9	0.80	0.273	1.19	70'	EL	34.5	
		SNS6A	39.950	--	1.095	43.747	1.4	0.273	1.41	70'	EL	34.5	0.507	1.88	70'	EL	6.9	0.80	0.273	1.10	70'	EL	34.5	
		SNS7B	42.000	--	1.043	43.806	1.4	0.273	1.34	70'	EL	34.5	0.507	1.85	70'	EL	6.9	0.80	0.273	1.04	70'	EL	34.5	
	TTST	TNAGRIT3	33.000	--	1.336	44.087	1.4	0.273	1.72	70'	EL	34.5	0.507	2.23	70'	EL	6.9	0.80	0.273	1.34	70'	EL	34.5	
		TNT4A	33.075	--	1.342	44.401	1.4	0.273	1.72	70'	EL	34.5	0.507	2.17	70'	EL	6.9	0.80	0.273	1.34	70'	EL	34.5	
		TNT6A	41.600	--	1.1	45.746	1.4	0.273	1.41	70'	EL	34.5	0.507	1.98	70'	EL	6.9	0.80	0.273	1.10	70'	EL	34.5	
		TNT7A	42.000	--	1.106	46.462	1.4	0.273	1.42	70'	EL	34.5	0.507	1.94	70'	EL	6.9	0.80	0.273	1.11	70'	EL	34.5	
		TNT7B	42.000	--	1.147	48.18	1.4	0.273	1.47	70'	EL	34.5	0.507	1.8	70'	EL	6.9	0.80	0.273	1.15	70'	EL	34.5	
		TNAGRIT4	43.000	--	1.089	46.838	1.4	0.273	1.4	70'	EL	34.5	0.507	1.74	70'	EL	6.9	0.80	0.273	1.09	70'	EL	34.5	
		TNAGT5A	45.000	--	1.026	46.175	1.4	0.273	1.32	70'	EL	34.5	0.507	1.74	70'	EL	6.9	0.80	0.273	1.03	70'	EL	34.5	
		TNAGT5B	45.000	**3**	1.013	45.579	1.4	0.273	1.3	70'	EL	34.5	0.507	1.66	70'	EL	6.9	0.80	0.273	**1.01**	70'	EL	**34.5**	

LOAD FACTORS:

DESIGN LOAD RATING FACTORS	LIMIT STATE	γ_{DC}	γ_{DW}
	STRENGTH I	1.25	1.50
	SERVICE III	1.00	1.00

NOTES:

MINIMUM RATING FACTORS ARE BASED ON THE STRENGTH I AND SERVICE III LIMIT STATES.

ALLOWABLE STRESSES FOR SERVICE III LIMIT STATE ARE AS REQUIRED FOR DESIGN.

COMMENTS:

1.
2.
3.
4.

⟨#⟩ CONTROLLING LOAD RATING

⟨1⟩ DESIGN LOAD RATING (HL-93)

⟨2⟩ DESIGN LOAD RATING (HS-20)

⟨3⟩ LEGAL LOAD RATING **

** SEE CHART FOR VEHICLE TYPE

GIRDER LOCATION

I - INTERIOR GIRDER
EL - EXTERIOR LEFT GIRDER
ER - EXTERIOR RIGHT GIRDER

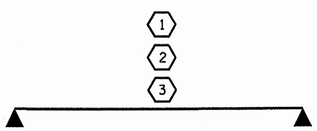

LRFR SUMMARY

FOR SPAN 'A'

PROJECT NO. BD-5110V

UNION COUNTY

STATION: 12+50.00 -L-

STATE OF NORTH CAROLINA
DEPARTMENT OF TRANSPORTATION
RALEIGH

STANDARD
LRFR SUMMARY FOR
70' CORED SLAB UNIT
90° SKEW
(NON-INTERSTATE TRAFFIC)

NORTH CAROLINA PROFESSIONAL SEAL 23371 ENGINEER VIPUL A. PATEL
1/13/12

REVISIONS						SHEET NO.
NO.	BY:	DATE:	NO.	BY:	DATE:	S-3
1			3			TOTAL SHEETS
2			4			12

ASSEMBLED BY : R. L. CHESSON DATE : 2011 OCT
CHECKED BY : M.K. BEARD DATE : 11/4/11

DRAWN BY : CVC 6/10
CHECKED BY : DNS 6/10

13-JAN-2012 09:52
R:\Structures\Plans\BD-5110V_SD_LRFR.dgn
vpatel

STD. NO. 24LRFR1_90S_70L

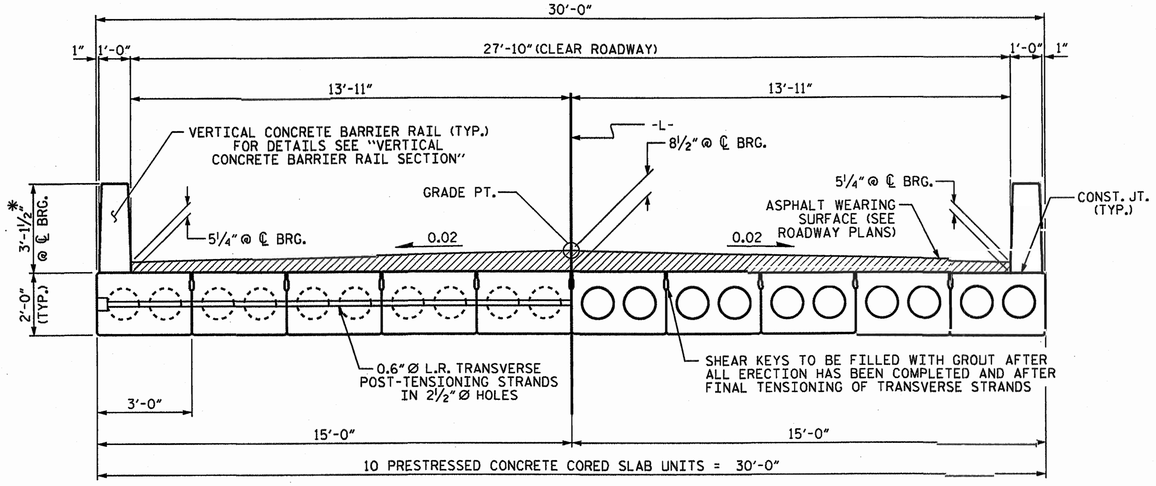

HALF SECTION
AT INTERMEDIATE DIAPHRAGMS

HALF SECTION
THROUGH VOIDS

TYPICAL SECTION

* - THE MAXIMUM BARRIER RAIL HEIGHT AND ASPHALT THICKNESS IS SHOWN. THE HEIGHT OF THE BARRIER RAIL AND ASPHALT THICKNESS VARIES WHILE THE TOP OF THE BARRIER RAIL FOLLOWS THE PROFILE OF THE GUTTERLINE. FOR RAIL HEIGHT DETAILS AND ASPHALT THICKNESS, SEE THE "VERTICAL CONCRETE BARRIER RAIL SECTION" DETAIL.

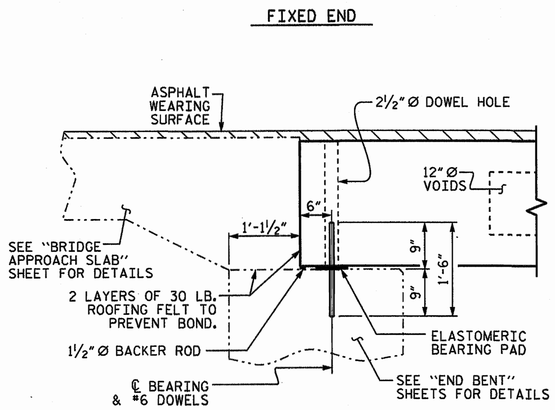

SECTION AT END BENT

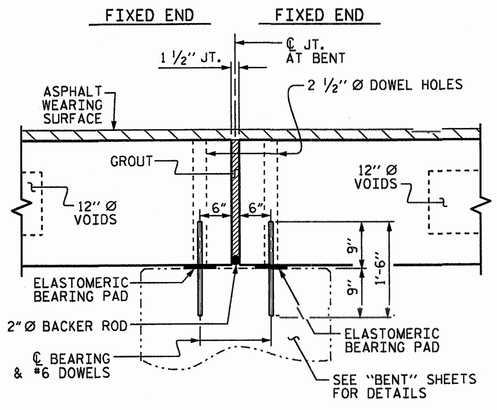

SECTION AT BENT

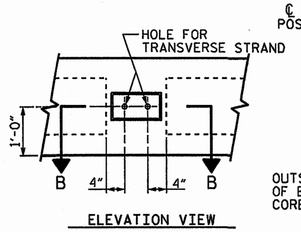

ELEVATION VIEW

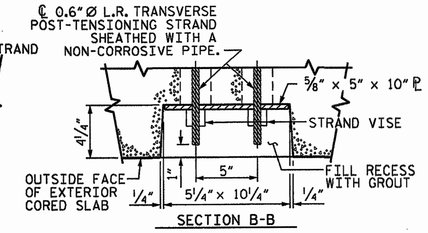

SECTION B-B

GROUTED RECESS AT END OF POST-TENSIONED STRAND OF CORED SLABS

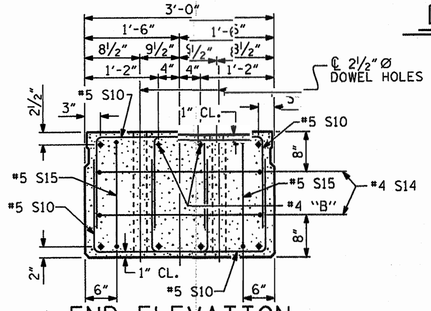

END ELEVATION

SHOWING PLACEMENT OF DOUBLE STIRRUPS AND LOCATION OF DOWEL HOLES. (STRAND LAYOUT NOT SHOWN.) INTERIOR SLAB UNIT SHOWN-EXTERIOR SLAB UNIT SIMILAR EXCEPT SHEAR KEY LOCATION.

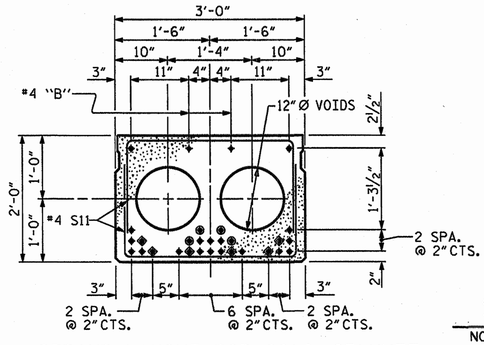

STRAND LAYOUT FOR 60' & 65' UNIT

(24 STRANDS REQUIRED)

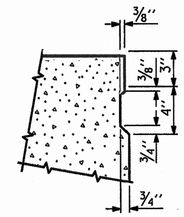

SHEAR KEY DETAIL

NOTE: OMIT SHEAR KEY ON OUTSIDE FACE OF EXTERIOR CORED SLABS.

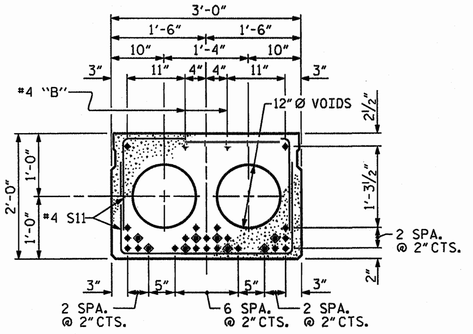

STRAND LAYOUT FOR 70' UNIT

(28 STRANDS REQUIRED)

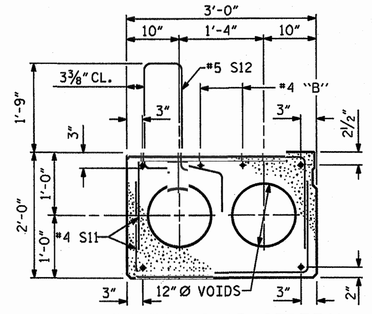

EXTERIOR SLAB SECTION

(FOR PRESTRESSED STRAND LAYOUT, SEE INTERIOR SLAB SECTION.)

INTERIOR SLAB SECTION
0.6" Ø LOW RELAXATION

◈ BOND SHALL BE BROKEN ON THESE STRANDS FOR A DISTANCE OF 12'-0" FROM END OF CORED SLAB UNIT. SEE STANDARD SPECIFICATIONS, ARTICLE 1078-7.

◉ OPTIONAL FULL LENGTH DEBONDED STRANDS. THESE STRANDS ARE NOT REQUIRED. IF THE FABRICATOR CHOOSES TO INCLUDE THESE STRANDS IN THE CORED SLAB UNIT, THE STRANDS SHALL BE DEBONDED FOR THE FULL LENGTH OF THE UNIT AT NO ADDITIONAL COST. SEE STANDARD SPECIFICATIONS, ARTICLE 1078-7.

DEBONDING LEGEND

PROJECT NO. BD-5110V
UNION COUNTY
STATION: 12+50.00 -L-

SHEET 1 OF 3

STATE OF NORTH CAROLINA
DEPARTMENT OF TRANSPORTATION
RALEIGH
STANDARD

3'-0" X 2'-0" PRESTRESSED CONCRETE CORED SLAB UNIT

NORTH CAROLINA PROFESSIONAL SEAL 23371 ENGINEER VIPUL A. PATEL
1/13/12

REVISIONS						SHEET NO.
NO.	BY:	DATE:	NO.	BY:	DATE:	S-4
1			3			TOTAL SHEETS
2			4			12

ASSEMBLED BY : R. L. CHESSON	DATE : 2011 OCT	
CHECKED BY : M.K. BEARD	DATE : 11/4/11	
DRAWN BY : MAA	6/10	
CHECKED BY : MKT	7/10	

13-JAN-2012 09:51
R:\Structures\Plans\BD-5110V_SD_CS.dgn
vpatel

STD. NO. 24PCS4_30_90S

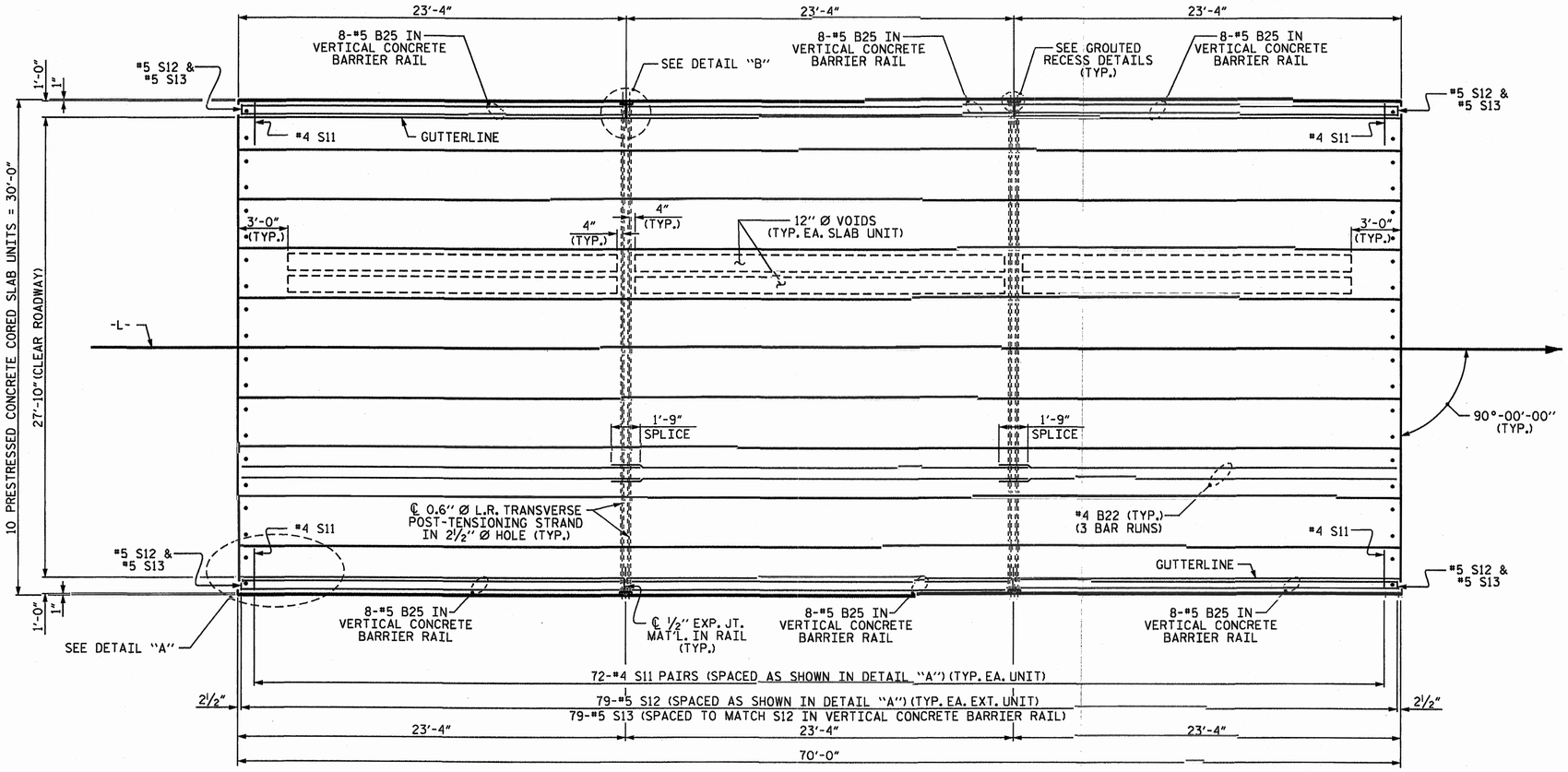

PLAN OF UNIT

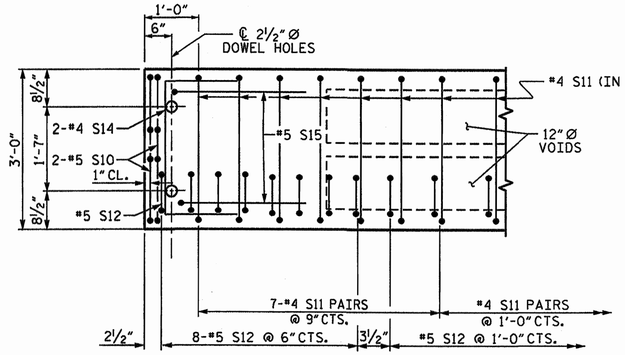

DETAIL "A"

NOTE: EXTERIOR UNIT SHOWN - INTERIOR UNIT SIMILAR EXCEPT OMIT #5 S12 BARS.

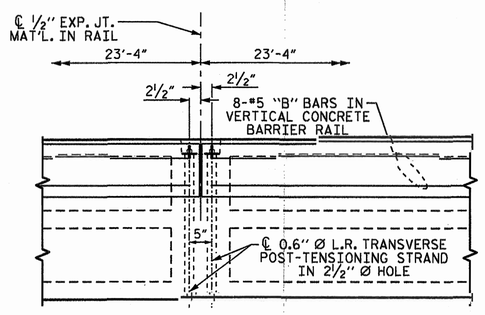

DETAIL "B"

#4 S11 BARS MAY BE SHIFTED AS NECESSARY TO MAINTAIN 1" CLEAR TO GROUTED RECESS AND 2½" Ø TRANSVERSE POST-TENSIONING STRAND HOLES

PROJECT NO. BD-5110V

UNION COUNTY

STATION: 12+50.00 -L-

SHEET 2 OF 3

STATE OF NORTH CAROLINA
DEPARTMENT OF TRANSPORTATION
RALEIGH

PLAN OF 70' UNIT 27'-10" CLEAR ROADWAY 90° SKEW

NORTH CAROLINA PROFESSIONAL SEAL 23371 ENGINEER VIMAL A. PATEL
1/13/12

REVISIONS						SHEET NO.
NO.	BY:	DATE:	NO.	BY:	DATE:	S-5
1			3			TOTAL SHEETS
2			4			12

ASSEMBLED BY : R. L. CHESSON DATE : 2011 OCT
CHECKED BY : M.K. BEARD DATE : 11/4/11

DRAWN BY : MAA 6/10
CHECKED BY : MKT 7/10

13-JAN-2012 09:51
R:\Structures\Plans\BD-5110V_SD_CS.dgn
vpatel

STD. NO. 24PCS_30_90S_70L

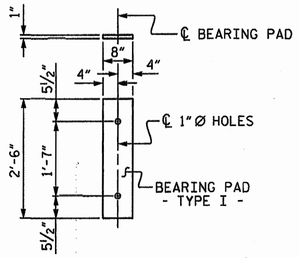

FIXED END
(TYPE I - 20 REQ'D)

ELASTOMERIC BEARING DETAILS

ELASTOMER IN ALL BEARINGS SHALL BE 60 DUROMETER HARDNESS.

GRADE 270 STRANDS	0.6"Ø L.R.
AREA (SQUARE INCHES)	0.217
ULTIMATE STRENGTH (LBS. PER STRAND)	58,600
APPLIED PRESTRESS (LBS. PER STRAND)	43,950

CORED SLABS REQUIRED	NUMBER	LENGTH	TOTAL LENGTH
70' UNIT			
EXTERIOR C.S.	2	70'-0"	140'-0"
INTERIOR C.S.	8	70'-0"	560'-0"
TOTAL	10	70'-0"	700'-0"

BAR TYPES

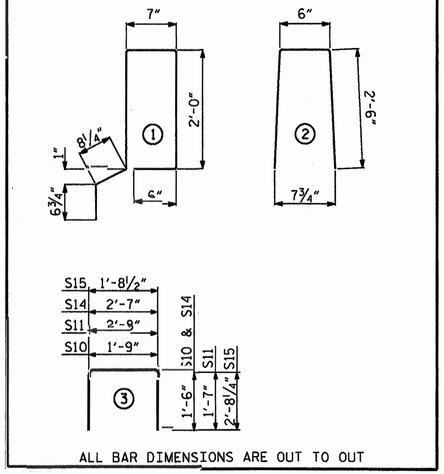

ALL BAR DIMENSIONS ARE OUT TO OUT

NOTES

ALL PRESTRESSING STRANDS SHALL BE 7-WIRE LOW RELAXATION GRADE 270 STRANDS AND SHALL CONFORM TO AASHTO M203 EXCEPT FOR SAMPLING REQUIREMENTS WHICH SHALL BE IN ACCORDANCE WITH THE STANDARD SPECIFICATIONS.

ALL REINFORCING STEEL CAST WITH THE CORED SLAB SECTIONS SHALL BE GRADE 60 AND SHALL BE INCLUDED IN THE UNIT PRICE BID FOR PRESTRESSED CONCRETE CORED SLABS.

RECESSES FOR TRANSVERSE STRANDS SHALL BE GROUTED AFTER THE TENSIONING OF THE STRANDS.

THE 2½"Ø DOWEL HOLES AT FIXED ENDS OF SLAB SECTIONS SHALL BE FILLED WITH NON-SHRINK GROUT.

THE 2"Ø BACKER ROD SHALL CONFORM TO THE REQUIREMENTS OF TYPE M BOND BREAKER. SEE SECTION 1028 OF THE STANDARD SPECIFICATIONS.

WHEN CORED SLABS ARE CAST, AN INTERNAL HOLD-DOWN SYSTEM SHALL BE EMPLOYED TO PREVENT VOIDS FROM RISING OR MOVING SIDEWAYS. AT LEAST SIX WEEKS PRIOR TO CASTING CORED SLABS, THE CONTRACTOR SHALL SUBMIT TO THE ENGINEER FOR REVIEW AND COMMENT, DETAILED DRAWINGS OF THE PROPOSED HOLD-DOWN SYSTEM. IN ADDITION TO STRUCTURAL DETAILS, LOCATION AND SPACING OF THE HOLD-DOWNS SHALL BE INDICATED.

THE TRANSFER OF LOAD FROM THE ANCHORAGES TO THE CORED SLAB UNIT SHALL BE DONE WHEN THE CONCRETE HAS REACHED A COMPRESSIVE STRENGTH OF NOT LESS THAN THE REQUIRED STRENGTH SHOWN IN THE "CONCRETE RELEASE STRENGTH" TABLE.

ALL REINFORCING STEEL IN VERTICAL CONCRETE BARRIER RAILS SHALL BE EPOXY COATED.

PRESTRESSING STRANDS SHALL BE CUT FLUSH WITH THE CORED SLAB UNIT ENDS.

APPLY EPOXY PROTECTIVE COATING TO CORED SLAB UNIT ENDS.

GROOVED CONTRACTION JOINTS, ½" IN DEPTH, SHALL BE TOOLED IN ALL EXPOSED FACES OF THE BARRIER RAIL AND IN ACCORDANCE WITH ARTICLE 825-10(B) OF THE STANDARD SPECIFICATIONS. A CONTRACTION JOINT SHALL BE LOCATED AT EACH THIRD POINT BETWEEN BARRIER RAIL EXPANSION JOINTS. ONLY ONE CONTRACTION JOINT IS REQUIRED AT MIDPOINT OF BARRIER RAIL SEGMENTS LESS THAN 20 FEET IN LENGTH AND NO CONTRACTION JOINTS ARE REQUIRED FOR THOSE SEGMENTS LESS THAN 10 FEET IN LENGTH.

TRANSVERSE POST TENSIONING OF THE CORED SLAB UNITS SHALL BE DONE IN ACCORDANCE WITH THE STANDARD SPECIFICATIONS.

MAINTAIN A SYMMETRIC TENSION FORCE BETWEEN EACH PAIR OF TRANSVERSE POST TENSIONING STRANDS IN THE DIAPHRAGM.

THE #4 S11 STIRRUPS MAY BE SHIFTED AS NECESSARY TO MAINTAIN 1" CLEAR TO THE GROUTED RECESS.

FOR GROUT FOR STRUCTURES, SEE SPECIAL PROVISIONS.

BILL OF MATERIAL FOR VERTICAL CONCRETE BARRIER RAIL						
BAR	BARS PER PAIR OF EXTERIOR UNITS 70' UNIT	TOTAL NO.	SIZE	TYPE	LENGTH	WEIGHT
*B25	48	48	#5	STR	22'-11"	1147
*S13	158	158	#5	2	5'-6"	906
* EPOXY COATED REINFORCING STEEL				LBS.		2053
CLASS AA CONCRETE				CU.YDS.		14.8
TOTAL VERTICAL CONCRETE BARRIER RAIL				LN. FT.		140.25

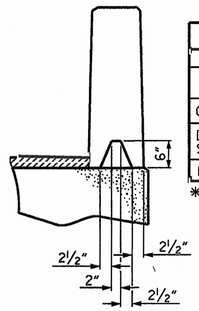

SECTION S-S
AT DAM IN OPEN JOINT
(THIS IS TO BE USED ONLY WHEN SLIP FORM IS USED)

DEAD LOAD DEFLECTION AND CAMBER	3'-0" x 2'-0"
70' CORED SLAB UNIT	0.6"Ø L.R. STRAND
CAMBER (SLAB ALONE IN PLACE)	4⅝" ↑
DEFLECTION DUE TO SUPERIMPOSED DEAD LOAD**	13/16" ↓
FINAL CAMBER	3½" ↑

** INCLUDES FUTURE WEARING SURFACE

BILL OF MATERIAL FOR ONE 70' CORED SLAB UNIT				EXTERIOR UNIT		INTERIOR UNIT	
BAR	NUMBER	SIZE	TYPE	LENGTH	WEIGHT	LENGTH	WEIGHT
B22	6	#4	STR	24'-6"	98	24'-6"	98
S10	8	#5	3	4'-9"	40	4'-9"	40
S11	144	#4	3	5'-10"	561	5'-10"	561
*S12	79	#5	1	6'-4"	522		
S14	4	#4	3	5'-7"	15	5'-7"	15
S15	4	#5	3	7'-1"	30	7'-1"	30
REINFORCING STEEL			LBS.		744		744
* EPOXY COATED REINFORCING STEEL			LBS.		522		
7000 P.S.I. CONCRETE			CU.YDS.		11.8		11.8
0.6"Ø L.R. STRANDS			No.		28		28

CONCRETE RELEASE STRENGTH	
UNIT	PSI
60' & 65' UNITS	4800
70' UNITS	5500

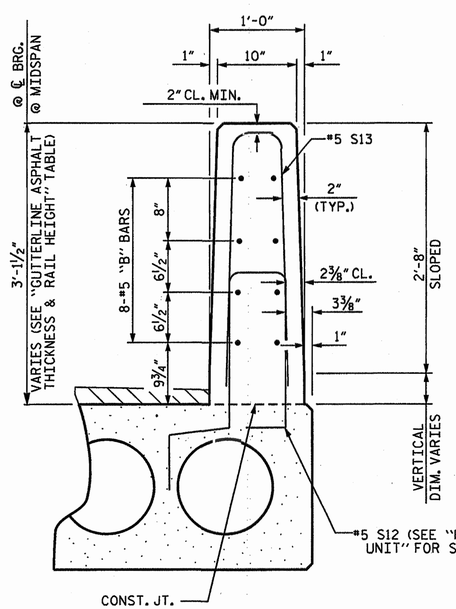

SECTION THRU RAIL

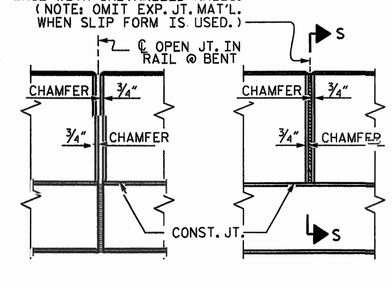

ELEVATION AT EXPANSION JOINTS

GUTTERLINE ASPHALT THICKNESS & RAIL HEIGHT	ASPHALT OVERLAY THICKNESS @ MID-SPAN	RAIL HEIGHT @ MID-SPAN
70' UNITS	1¾"	2'-10"

VERTICAL CONCRETE BARRIER RAIL DETAILS

ASSEMBLED BY : R. L. CHESSON	DATE : 2011 OCT	
CHECKED BY : M.K. BEARD	DATE : 11/4/11	
DRAWN BY : MAA	6/10	
CHECKED BY : MKT	7/10	

13-JAN-2012 12:13
R:\Structures\Plans\BD-5110V_SD_CS.dgn
vpatel

NORTH CAROLINA PROFESSIONAL SEAL 23371 ENGINEER VIPUL A. PATEL

PROJECT NO. BV-5110V
UNION COUNTY
STATION: 12+50.00 -L-

SHEET 3 OF 3

STATE OF NORTH CAROLINA
DEPARTMENT OF TRANSPORTATION
RALEIGH
STANDARD
3'-0" X 2'-0"
PRESTRESSED CONCRETE
CORED SLAB UNIT

REVISIONS						SHEET NO.
NO.	BY:	DATE:	NO.	BY:	DATE:	S-6
1			3			TOTAL SHEETS
2			4			12

STD. NO. 24PCS3_30_90S

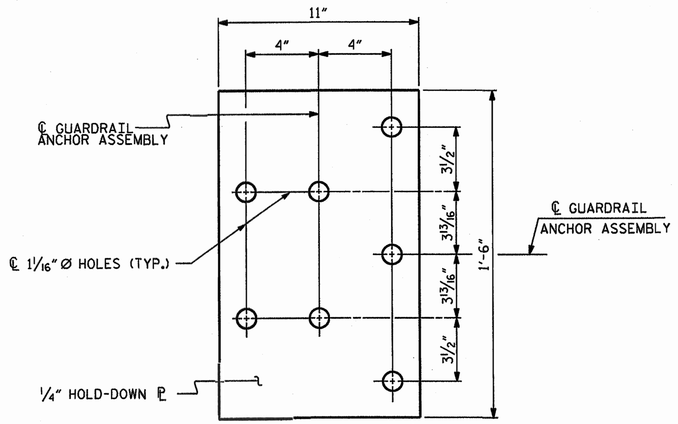

PLAN

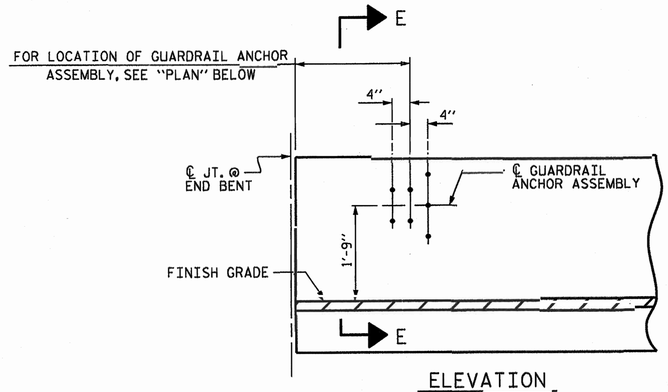

ELEVATION

NOTES

THE GUARDRAIL ANCHOR ASSEMBLY SHALL CONSIST OF A 1/4" HOLD DOWN PLATE AND 7 - 7/8" Ø BOLTS WITH NUTS AND WASHERS.

THE HOLD-DOWN PLATE SHALL CONFORM TO AASHTO M270 GRADE 36. AFTER FABRICATION, THE HOLD-DOWN PLATE SHALL BE HOT-DIP GALVANIZED IN ACCORDANCE WITH AASHTO M111.

BOLTS SHALL CONFORM TO THE REQUIREMENTS OF ASTM A307 AND NUTS SHALL CONFORM TO THE REQUIREMENTS OF AASHTO M291. BOLTS, NUTS AND WASHERS SHALL BE GALVANIZED. (AT THE CONTRACTOR'S OPTION, STAINLESS STEEL BOLTS, NUTS AND WASHERS MAY BE USED AS AN ALTERNATE FOR THE 7/8" Ø GALVANIZED BOLTS, NUTS AND WASHERS. THEY SHALL CONFORM TO OR EXCEED THE MECHANICAL REQUIREMENTS OF ASTM A307. THE USE OF THIS ALTERNATE SHALL BE APPROVED BY THE ENGINEER.)

THE GUARDRAIL ANCHOR ASSEMBLY IS REQUIRED AT ALL POINTS WHERE APPROACH GUARDRAIL IS TO BE ATTACHED TO THE END OF BARRIER RAIL. FOR POINTS OF ATTACHMENT, SEE SKETCH.

AFTER INSTALLATION, THE EXPOSED THREAD OF THE BOLT SHALL BE BURRED WITH A SHARP POINTED TOOL.

THE COST OF THE GUARDRAIL ANCHOR ASSEMBLY SHALL BE INCLUDED IN THE UNIT CONTRACT PRICE BID FOR VERTICAL CONCRETE BARRIER RAIL.

THE VERTICAL REINFORCING BARS MAY BE SHIFTED SLIGHTLY IN THE VERTICAL CONCRETE BARRIER RAIL TO CLEAR ASSEMBLY BOLTS.

THE 1 1/4" Ø HOLES SHALL BE FORMED OR DRILLED WITH A CORE BIT. IMPACT TOOLS WILL NOT BE PERMITTED. ANY CONCRETE DAMAGED BY THIS WORK SHALL BE REPAIRED TO THE SATISFACTION OF THE ENGINEER.

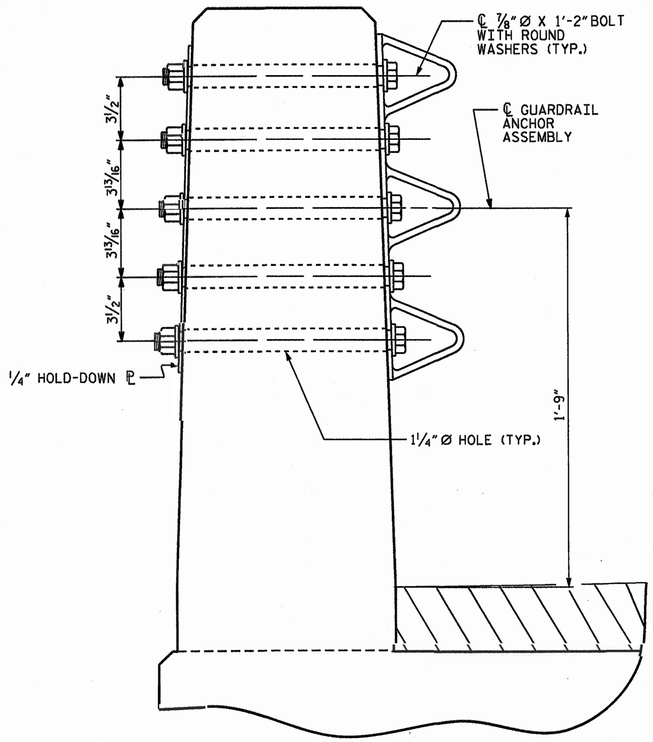

SECTION E-E

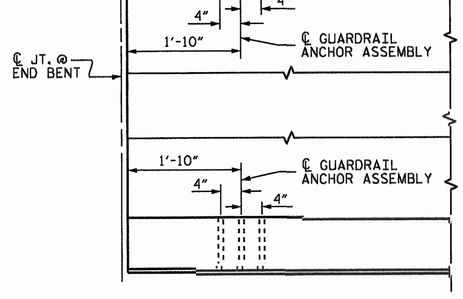

PLAN

GUARDRAIL ANCHOR ASSEMBLY DETAILS

LOCATION OF ANCHORS FOR GUARDRAIL

END BENT #1 SHOWN, END BENT #2 SIMILAR.

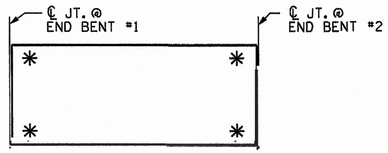

SKETCH SHOWING POINTS OF ATTACHMENT

✳ DENOTES GUARDRAIL ANCHOR ASSEMBLY

PROJECT NO. BD-5110V

UNION COUNTY

STATION: 12+50.00 -L-

STATE OF NORTH CAROLINA
DEPARTMENT OF TRANSPORTATION
RALEIGH

STANDARD
GUARDRAIL ANCHORAGE FOR VERTICAL CONCRETE BARRIER RAIL

REVISIONS						SHEET NO.
NO.	BY:	DATE:	NO.	BY:	DATE:	S-7
1			3			TOTAL SHEETS
2			4			12

NORTH CAROLINA PROFESSIONAL SEAL 23371 ENGINEER VIPUL A. PATEL
1/13/12

ASSEMBLED BY : R. L. CHESSON	DATE : 2011 OCT
CHECKED BY : M.K. BEARD	DATE : 11/4/11
DRAWN BY : MAA 5/10	ADDED 5/6/10
CHECKED BY : GM 5/10	REV. 10/1/11 MAA/GM

13-JAN-2012 09:50
R:\Structures\Plans\BD-5110V_SD_CS.dgn
vpatel

(SHT 1) STD. NO. GRA3

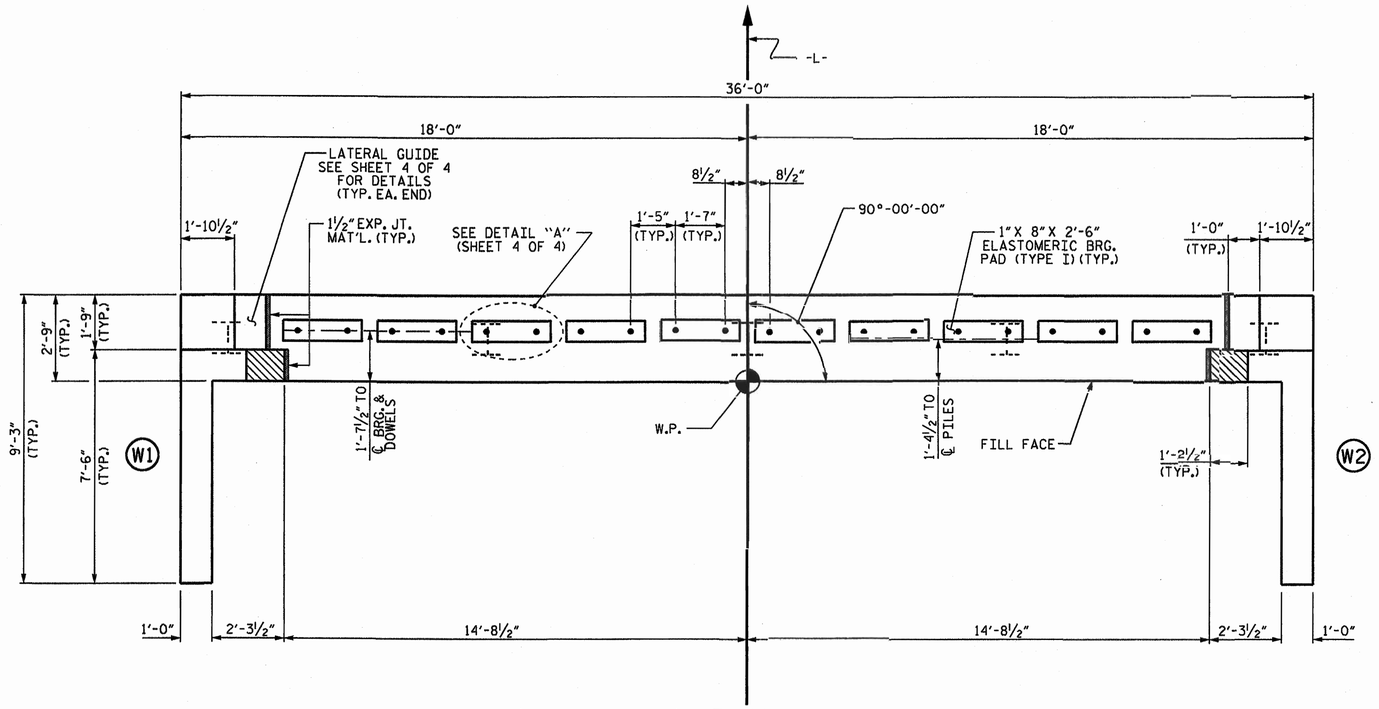

PLAN

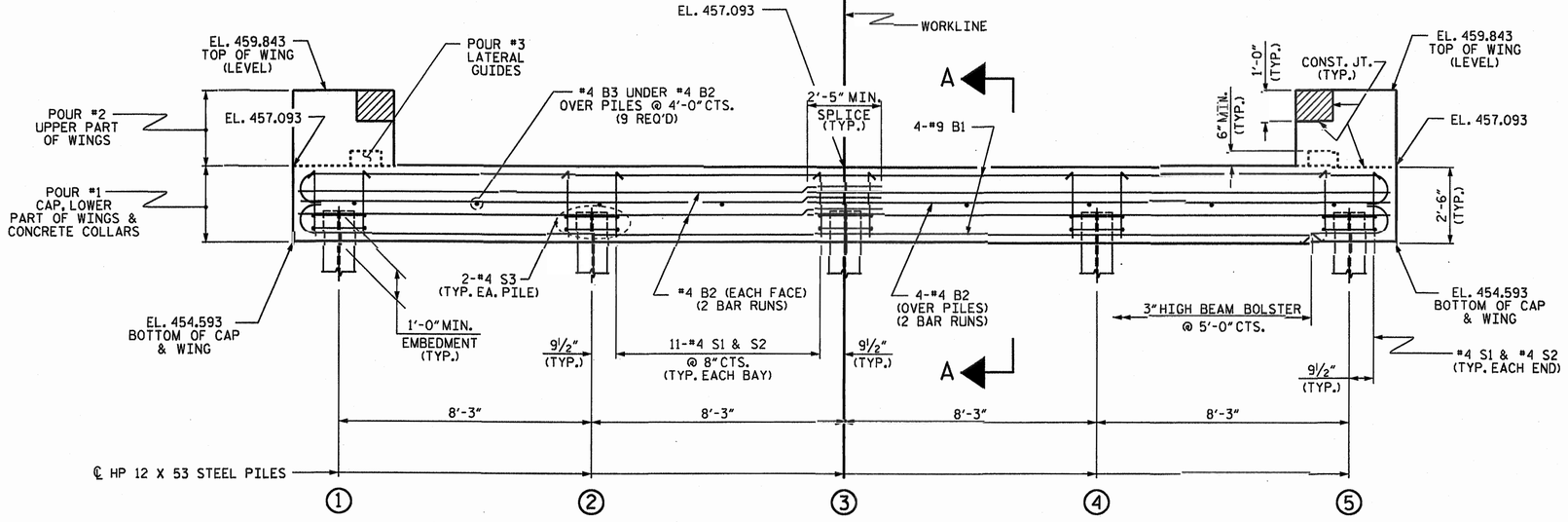

ELEVATION

WINGS NOT SHOWN FOR CLARITY.
FOR SECTION A-A, SEE SHEET 4 OF 4.
CONCRETE COLLARS FOR STEEL PILES NOT SHOWN IN PLAN AND ELEVATION VIEWS FOR CLARITY.
SEE "CORROSION PROTECTION FOR STEEL PILES DETAIL", SHEET 4 OF 4.

NOTES

STIRRUPS IN CAP MAY BE SHIFTED AS NECESSARY TO CLEAR DOWELS.

THE LATERAL GUIDES ARE NOT TO BE POURED UNTIL AFTER THE CORED SLAB UNITS ARE IN PLACE.

THE CONCRETE IN THE SHADED AREA OF THE WING SHALL BE POURED AFTER THE VERTICAL CONCRETE BARRIER RAIL IS CAST IF SLIP FORMING IS USED.

FOR PILE SPLICE DETAILS, SEE SHEET 4 OF 4.

FOR WING DETAILS, SEE SHEET 3 OF 4.

THE CONTRACTOR HAS THE OPTION TO OMIT THE LATERAL GUIDE IF APPROVED BY THE ENGINEER.

PROJECT NO. BD-5110V

UNION COUNTY

STATION: 12+50.00 -L-

SHEET 1 OF 4

STATE OF NORTH CAROLINA
DEPARTMENT OF TRANSPORTATION
RALEIGH

SUBSTRUCTURE

END BENT No. 1

REVISIONS					
NO.	BY:	DATE:	NO.	BY:	DATE:
1			3		
2			4		

SHEET NO. S-8

TOTAL SHEETS 12

NORTH CAROLINA PROFESSIONAL SEAL 23371 ENGINEER VIMAL A. PATEL
1/13/12

ASSEMBLED BY : R. L. CHESSON DATE : 2011 OCT
CHECKED BY : M.K. BEARD DATE : 11/4/11

DRAWN BY : DGE 02/10
CHECKED BY : MKT 02/10

13-JAN-2012 09:50
R:\Structures\Plans\BD-5110V_SD_E*.dgn
vpatel

STD. NO. EB_30_90S

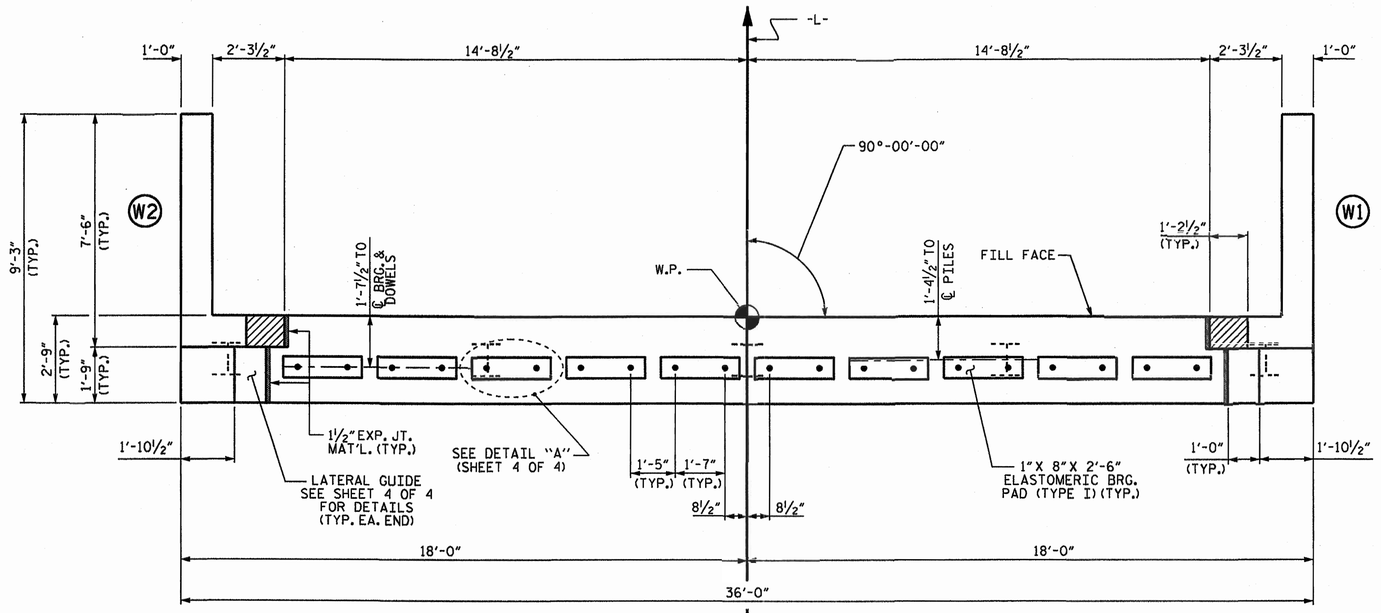

PLAN

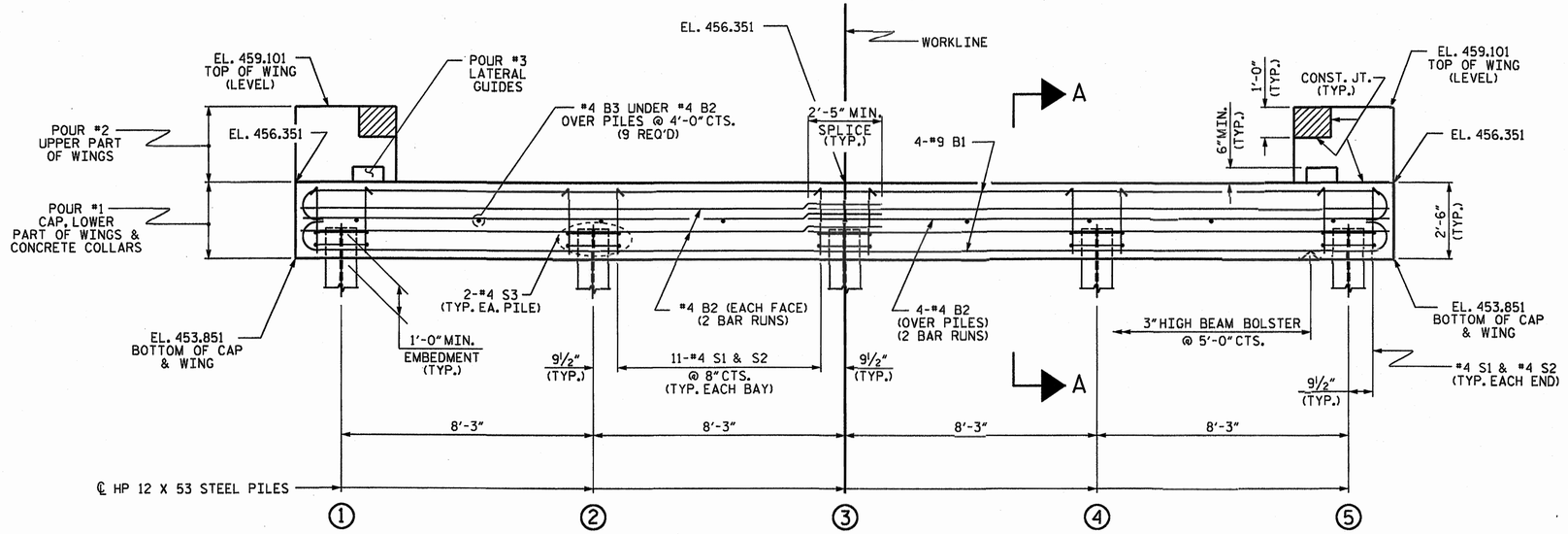

ELEVATION

WINGS NOT SHOWN FOR CLARITY.
FOR SECTION A-A, SEE SHEET 4 OF 4.
CONCRETE COLLARS FOR STEEL PILES NOT SHOWN IN PLAN AND ELEVATION VIEWS FOR CLARITY.
SEE "CORROSION PROTECTION FOR STEEL PILES DETAIL", SHEET 4 OF 4.

NOTES

STIRRUPS IN CAP MAY BE SHIFTED AS NECESSARY TO CLEAR DOWELS.

THE LATERAL GUIDES ARE NOT TO BE POURED UNTIL AFTER THE CORED SLAB UNITS ARE IN PLACE.

THE CONCRETE IN THE SHADED AREA OF THE WING SHALL BE POURED AFTER THE VERTICAL CONCRETE BARRIER RAIL IS CAST IF SLIP FORMING IS USED.

FOR PILE SPLICE DETAILS, SEE SHEET 4 OF 4.

FOR WING DETAILS, SEE SHEET 3 OF 4.

THE CONTRACTOR HAS THE OPTION TO OMIT THE LATERAL GUIDE IF APPROVED BY THE ENGINEER.

ASSEMBLED BY :	R. L. CHESSON DATE : 2011 OCT
CHECKED BY :	M.K. BEARD DATE : 11/4/11
DRAWN BY :	DGE 02/10
CHECKED BY :	MKT 02/10

13-JAN-2012 09:49
R:\Structures\Plans\BD-5110V_SD_E*.dgn
vpatel

NORTH CAROLINA PROFESSIONAL SEAL 23371 ENGINEER VIMAL A. PATEL
1/13/12

PROJECT NO. BD-5110V
UNION COUNTY
STATION: 12+50.00 -L-

SHEET 2 OF 4

STATE OF NORTH CAROLINA
DEPARTMENT OF TRANSPORTATION
RALEIGH

SUBSTRUCTURE

END BENT No. 2

REVISIONS						SHEET NO.
NO.	BY:	DATE:	NO.	BY:	DATE:	S-9
1			3			TOTAL SHEETS
2			4			12

STD. NO. EB_30_90S

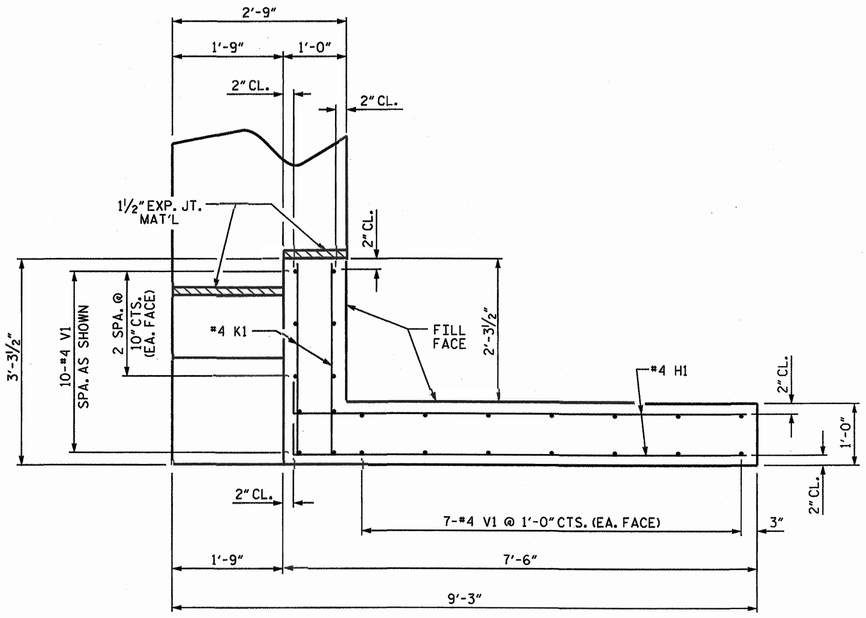

PLAN OF WING (W1)

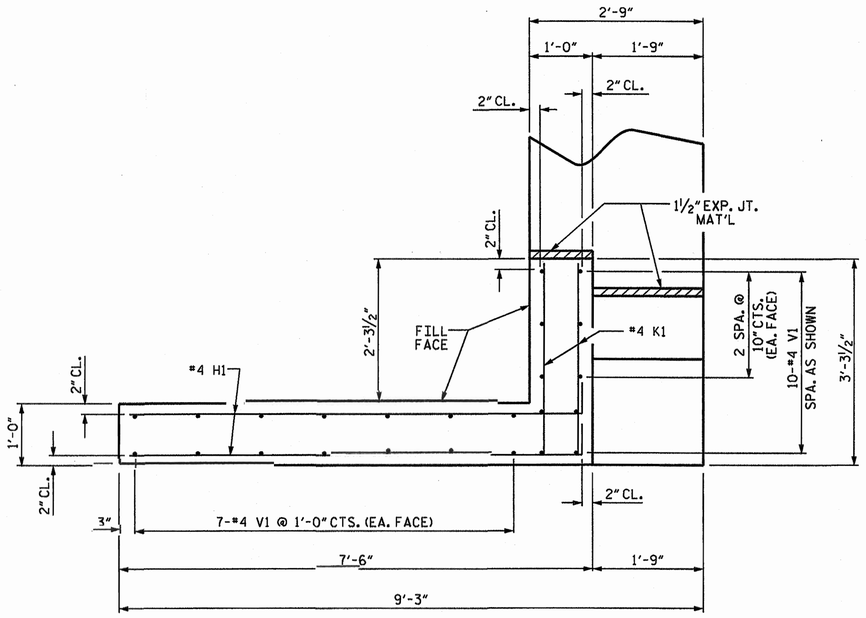

PLAN OF WING (W2)

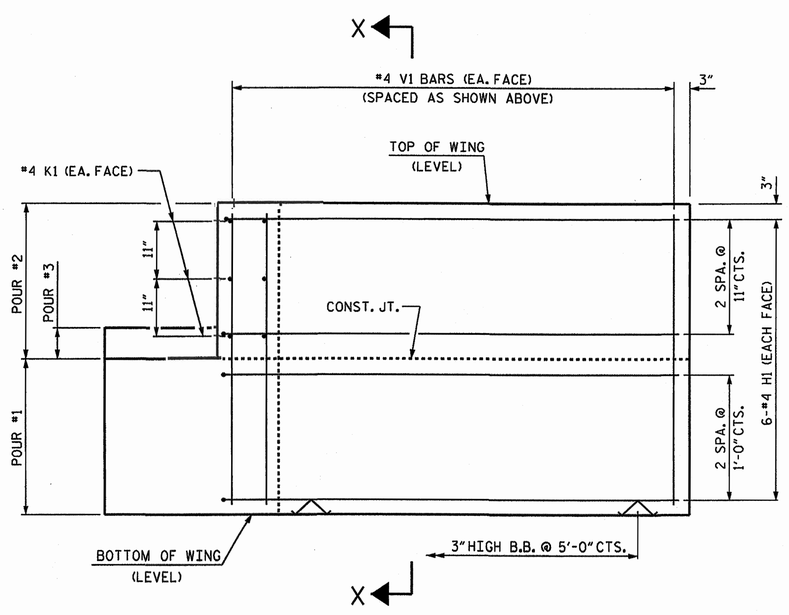

ELEVATION OF WING (W1)

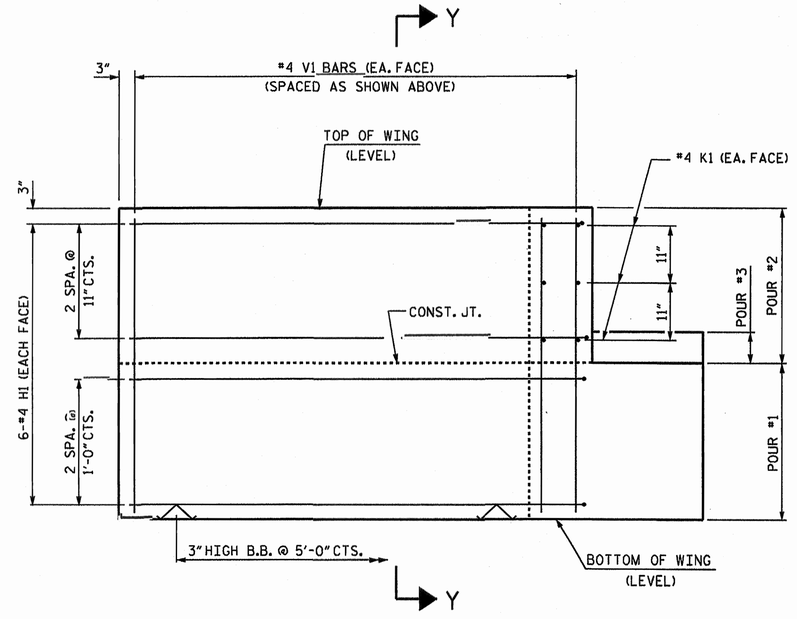

ELEVATION OF WING (W2)

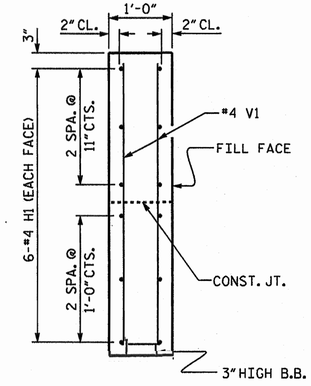

SECTION X-X

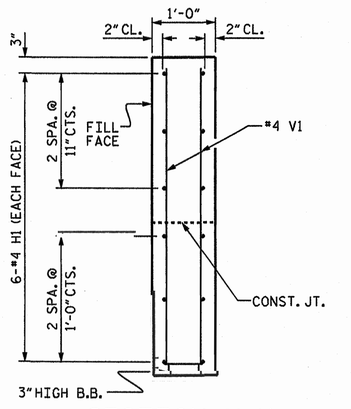

SECTION Y-Y

PROJECT NO. BD-5110V

UNION COUNTY

STATION: 12+50.00 -L-

SHEET 3 OF 4

STATE OF NORTH CAROLINA
DEPARTMENT OF TRANSPORTATION
RALEIGH

SUBSTRUCTURE

END BENT
WING DETAILS

REVISIONS					
NO.	BY:	DATE:	NO.	BY:	DATE:
1			3		
2			4		

SHEET NO. S-10
TOTAL SHEETS 12

NORTH CAROLINA PROFESSIONAL SEAL 23871 ENGINEER VIPUL A. PATEL
1/13/12

WING DETAILS

ASSEMBLED BY : R. L. CHESSON	DATE : 2011 OCT	
CHECKED BY : M.K. BEARD	DATE : 11/4/11	
DRAWN BY : DGE	02/10	
CHECKED BY : MKT	02/10	

13-JAN-2012 09:49
R:\Structures\Plans\BD-5110V_SD_E*.dgn
vpatel

STD. NO. EB_30_90S

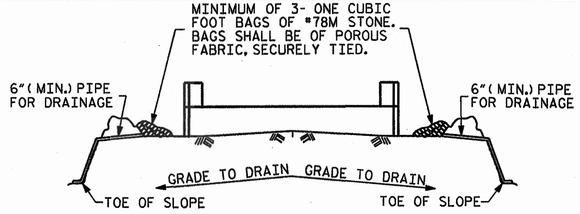

BAGGED STONE AND PIPE SHALL BE PLACED IMMEDIATELY AFTER COMPLETION OF END BENT EXCAVATION. PIPE MAY BE EITHER CONCRETE, CORRUGATED STEEL, CORRUGATED ALUMINUM ALLOY, OR CORRUGATED PLASTIC. PERFORATED PIPE WILL NOT BE ALLOWED.

BAGGED STONE SHALL REMAIN IN PLACE UNTIL THE ENGINEER DIRECTS THAT IT BE REMOVED. THE CONTRACTOR SHALL REMOVE AND DISPOSE OF SILT ACCUMULATIONS AT BAGGED STONE WHEN SO DIRECTED BY THE ENGINEER. BAGS SHALL BE REMOVED AND REPLACED WHENEVER THE ENGINEER DETERMINES THAT THEY HAVE DETERIORATED AND LOST THEIR EFFECTIVENESS.

NO SEPARATE PAYMENT WILL BE MADE FOR THIS WORK AND THE ENTIRE COST OF THIS WORK SHALL BE INCLUDED IN THE UNIT CONTRACT PRICE BID FOR THE SEVERAL PAY ITEMS.

TEMPORARY DRAINAGE AT END BENT

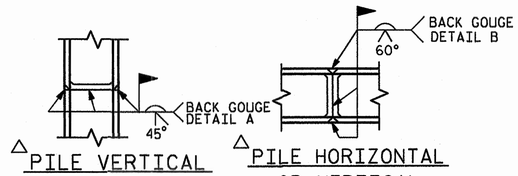

△POSITION OF PILE DURING WELDING.

PILE SPLICE DETAILS

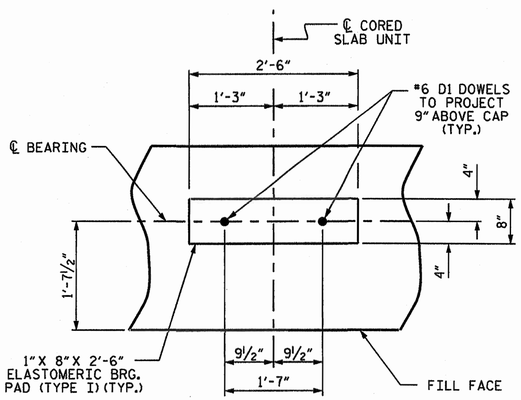

DETAIL "A"

(END BENT No. 1 SHOWN, END BENT No. 2 SIMILAR BY ROTATION)

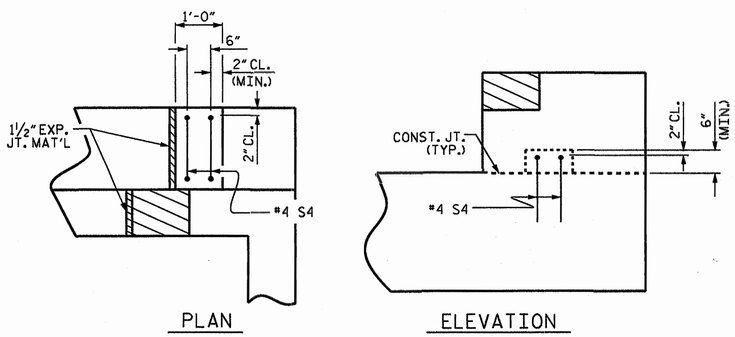

LATERAL GUIDE DETAILS

(RIGHT LATERAL GUIDE SHOWN, LEFT END SIMILAR)

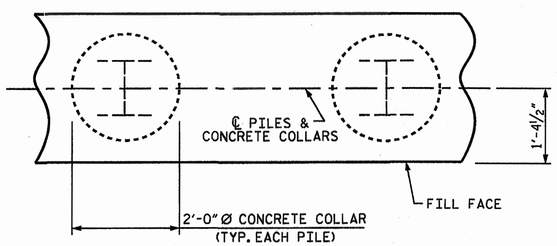

PLAN

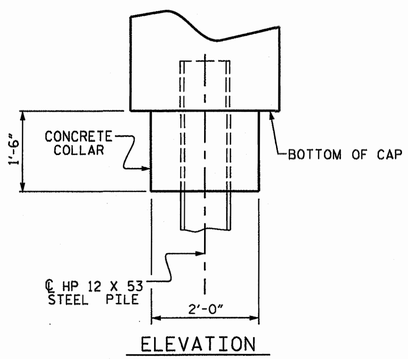

ELEVATION

CORROSION PROTECTION FOR STEEL PILES DETAIL

(END BENT No. 1 SHOWN, END BENT No. 2 SIMILAR BY ROTATION)

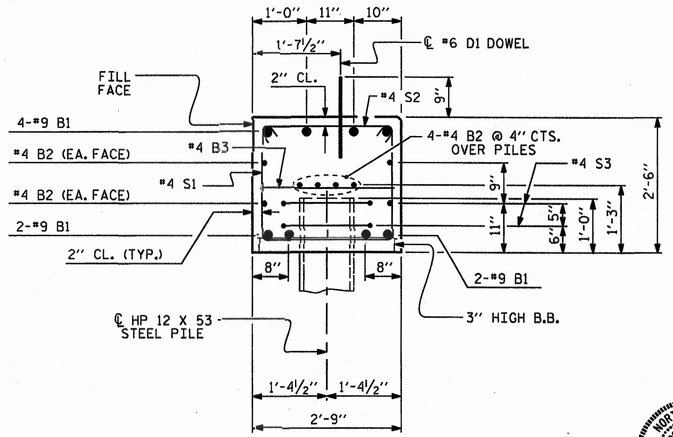

SECTION A-A

(CONCRETE COLLAR NOT SHOWN FOR CLARITY. SEE "CORROSION PROTECTION FOR STEEL PILES DETAIL.")

BAR TYPES

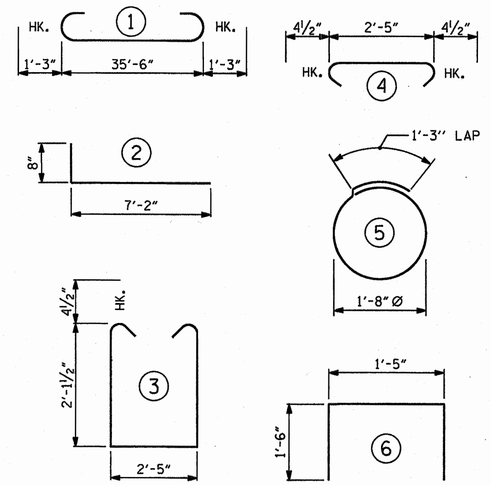

ALL BAR DIMENSIONS ARE OUT TO OUT.

END BENT No. 1		END BENT No. 2	
HP 12 X 53 STEEL PILES		HP 12 X 53 STEEL PILES	
NO: 5	LIN. FT.= 65	NO: 5	LIN. FT.= 100

BILL OF MATERIAL FOR ONE END BENT

BAR	NO.	SIZE	TYPE	LENGTH	WEIGHT
B1	8	#9	1	38'-0"	1034
B2	16	#4	STR	19'-1"	204
B3	9	#4	STR	2'-5"	15
D1	20	#6	STR	1'-6"	45
H1	24	#4	2	7'-10"	126
K1	12	#4	STR	2'-11"	23
S1	46	#4	3	7'-5"	228
S2	46	#4	4	3'-2"	97
S3	10	#4	5	6'-6"	43
S4	4	#4	6	4'-5"	12
V1	48	#4	STR	4'-8"	150

REINFORCING STEEL (FOR ONE END BENT) 1977 LBS.

CLASS A CONCRETE BREAKDOWN (FOR ONE END BENT)

POUR #1	CAP, LOWER PART OF WINGS & COLLARS	11.2 C.Y.
POUR #2	UPPER PART OF WINGS	2.0 C.Y.
POUR #3	LATERAL GUIDES	0.1 C.Y.
TOTAL CLASS A CONCRETE		13.3 C.Y.

PROJECT NO. BD-5110V

UNION COUNTY

STATION: 12+50.00 -L-

SHEET 4 OF 4

STATE OF NORTH CAROLINA
DEPARTMENT OF TRANSPORTATION
RALEIGH

SUBSTRUCTURE

END BENT No. 1 & 2 DETAILS

NORTH CAROLINA PROFESSIONAL SEAL 23371 ENGINEER VIPUL A. PATEL
1/13/12

REVISIONS						SHEET NO.
NO.	BY:	DATE:	NO.	BY:	DATE:	S-11
1			3			TOTAL SHEETS
2			4			12

ASSEMBLED BY : R. L. CHESSON	DATE : 2011 OCT
CHECKED BY : M.K. BEARD	DATE : 11/4/11
DRAWN BY : DGE 02/10	
CHECKED BY : MKT 02/10	

13-JAN-2012 09:49
R:\Structures\Plans\BD-5110V_SD_E*.dgn
vpatel

STD. NO. EB_30_90S

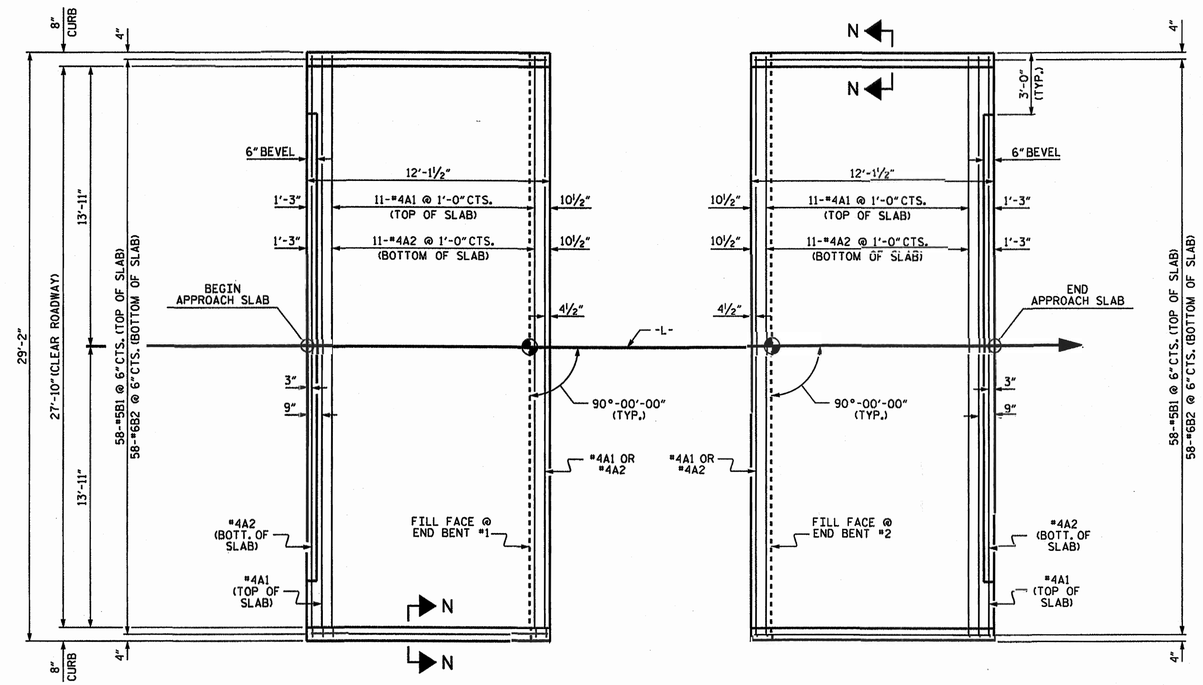

PLAN @ END BENT #1 PLAN @ END BENT #2

DIMENSIONS SHOWN ARE TYPICAL FOR BOTH APPROACH SLABS

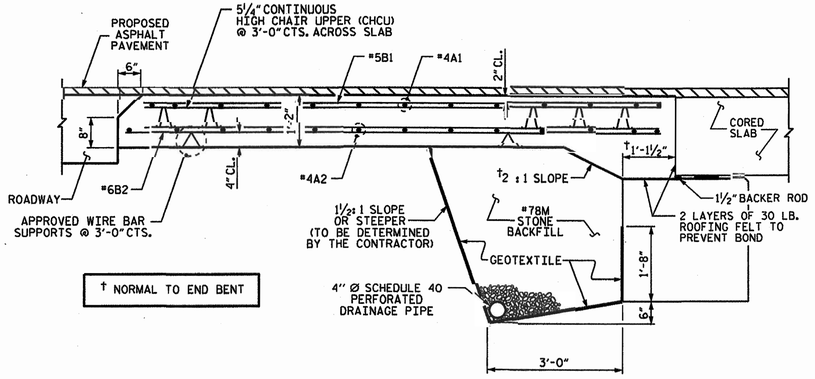

SECTION THRU SLAB

NOTES

FOR BRIDGE APPROACH FILL INCLUDING GEOTEXTILE, 4" Ø DRAINAGE PIPE, AND #78M STONE BACKFILL, SEE ROADWAY PLANS.

GEOTEXTILE SHALL BE TYPE 1 IN ACCORDANCE WITH THE STANDARD SPECIFICATIONS SECTION 1056.

#78M STONE BACKFILL (CLASS V SELECT MATERIAL) SHALL BE IN ACCORDANCE WITH STANDARD SPECIFICATIONS SECTION 1016.

#78M STONE BACKFILL IS TO BE CONTINUOUS ALONG FILL FACE OF BACKWALL FROM OUTSIDE EDGE TO OUTSIDE EDGE OF APPROACH SLAB.

FOR THE 4" Ø DRAINAGE PIPE OUTLET(S), SEE ROADWAY STANDARD DRAWINGS.

AREA BETWEEN THE WINGWALL AND APPROACH SLAB SHALL BE GRADED TO DRAIN THE WATER AWAY FROM THE FILL FACE OF THE BRIDGE AND SHALL BE PAVED. SEE ROADWAY PLANS.

APPROACH SLAB GROOVING IS NOT REQUIRED.

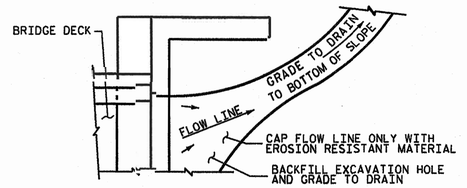

NOTE: IF THE APPROACH SLAB IS NOT CONSTRUCTED IMMEDIATELY AFTER THE BACKFILLING OF THE END BENT EXCAVATION, GRADE TO DRAIN TO THE BOTTOM OF THE SLOPE AND PROVIDE EROSION RESISTANT MATERIAL, SUCH AS FIBERGLASS ROVING OR AS DIRECTED BY THE ENGINEER TO PREVENT SOIL EROSION AND TO PROTECT THE AREA ADJACENT TO THE STRUCTURE. THE CONTRACTOR WILL BE REQUIRED TO REMOVE THESE MATERIALS PRIOR TO CONSTRUCTION OF THE APPROACH SLAB.

TEMPORARY DRAINAGE DETAIL

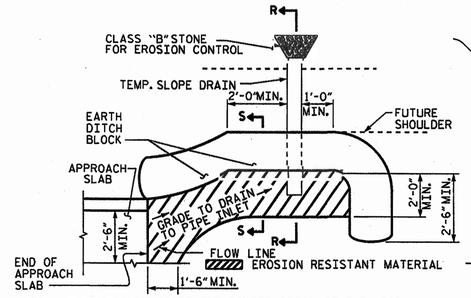

NOTE: IMMEDIATELY AFTER THE CONSTRUCTION OF THE APPROACH SLAB, THE CONTRACTOR SHALL PROVIDE TEMPORARY BERM AND SLOPE DRAIN. CONTRACTOR SHALL GRADE TO PIPE INLET AND PROVIDE EROSION RESISTANT MATERIAL AS SHOWN. THE EROSION RESISTANT MATERIAL SHALL BE EITHER 1) ASPHALT PLANT MIX, TYPE 1 OR TYPE 2, MIN. 2" DEPTH, 2) EROSION CONTROL MAT, OR 3) CONCRETE, AS DIRECTED BY THE ENGINEER. THE SLOPE DRAIN SHALL CONSIST OF A NON-PERFORATED TEMPORARY DRAINAGE PIPE, 12 INCHES IN DIAMETER.

PLAN VIEW

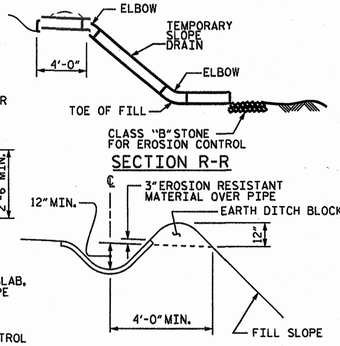

SECTION S-S

TEMPORARY BERM AND SLOPE DRAIN DETAILS

(TO BE USED WHEN SHOULDER BERM GUTTER IS REQUIRED)

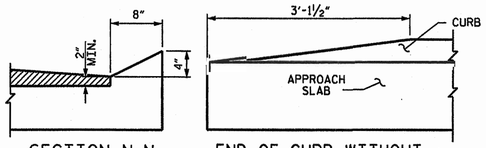

SECTION N-N END OF CURB WITHOUT SHOULDER BERM GUTTER

CURB DETAILS

SPLICE LENGTHS		
BAR SIZE	EPOXY COATED	UNCOATED
#4	2'-0"	1'-9"
#5	2'-6"	2'-2"
#6	3'-10"	2'-7"

NORTH CAROLINA PROFESSIONAL SEAL 23371 ENGINEER VIRAL A. PATEL
1/13/12

BILL OF MATERIAL

APPROACH SLAB AT EB #1

BAR	NO.	SIZE	TYPE	LENGTH	WEIGHT
* A1	13	#4	STR	28'-10"	250
A2	13	#4	STR	28'-10"	250
* B1	58	#5	STR	11'-2"	676
B2	58	#6	STR	11'-8"	1016
REINFORCING STEEL				LBS.	1266
* EPOXY COATED REINFORCING STEEL				LBS.	926
CLASS AA CONCRETE				C.Y.	18.1

APPROACH SLAB AT EB #2

BAR	NO.	SIZE	TYPE	LENGTH	WEIGHT
* A1	13	#4	STR	28'-10"	250
A2	13	#4	STR	28'-10"	250
* B1	58	#5	STR	11'-2"	676
B2	58	#6	STR	11'-8"	1016
REINFORCING STEEL				LBS.	1266
* EPOXY COATED REINFORCING STEEL				LBS.	926
CLASS AA CONCRETE				C.Y.	18.1

PROJECT NO. BD-5110V

UNION COUNTY

STATION: 12+50.00 -L-

STATE OF NORTH CAROLINA
DEPARTMENT OF TRANSPORTATION
RALEIGH

STANDARD BRIDGE APPROACH SLAB FOR PRESTRESSED CONCRETE CORED SLAB UNIT (SUB-REGIONAL TIER) 90° SKEW

NO.	BY:	DATE:	NO.	BY:	DATE:
1			3		
2			4		

SHEET NO. S-12

TOTAL SHEETS 12

ASSEMBLED BY :	J.P. ADAMS	DATE :	1/12/12
CHECKED BY :	V.A. PATEL	DATE :	1/12/12
DRAWN BY : SHS/MAA 5-09	REV. 12-11		MAA/AAC
CHECKED BY : BCH 5-09			

13-JAN-2012 09:48
R:\Structures\Plans\BD-5110V_SD_AS.dgn
vpatel

STD. NO. BAS_30_90S

STANDARD NOTES

DESIGN DATA:

SPECIFICATIONS	A.A.S.H.T.O. (CURRENT)
LIVE LOAD	SEE PLANS
IMPACT ALLOWANCE	SEE A.A.S.H.T.O.
STRESS IN EXTREME FIBER OF	
STRUCTURAL STEEL - AASHTO M270 GRADE 36	20,000 LBS. PER SQ. IN.
- AASHTO M270 GRADE 50W	27,000 LBS. PER SQ. IN.
- AASHTO M270 GRADE 50	27,000 LBS. PER SQ. IN.
REINFORCING STEEL IN TENSION	
GRADE 60	24,000 LBS. PER SQ. IN.
CONCRETE IN COMPRESSION	1,200 LBS. PER SQ. IN.
CONCRETE IN SHEAR	SEE A.A.S.H.T.O.
STRUCTURAL TIMBER - TREATED OR	
UNTREATED - EXTREME FIBER STRESS	1,800 LBS. PER SQ. IN.
COMPRESSION PERPENDICULAR TO GRAIN OF TIMBER	375 LBS. PER SQ. IN.
EQUIVALENT FLUID PRESSURE OF EARTH	30 LBS. PER CU. FT. (MINIMUM)

MATERIAL AND WORKMANSHIP:

EXCEPT AS MAY OTHERWISE BE SPECIFIED ON PLANS OR IN THE SPECIAL PROVISIONS, ALL MATERIAL AND WORKMANSHIP SHALL BE IN ACCORDANCE WITH THE 2012 "STANDARD SPECIFICATIONS FOR ROADS AND STRUCTURES" OF THE N. C. DEPARTMENT OF TRANSPORTATION.

STEEL SHEET PILING FOR PERMANENT OR TEMPORARY APPLICATIONS SHALL BE HOT ROLLED.

CONCRETE:

UNLESS OTHERWISE REQUIRED ON PLANS, CLASS A CONCRETE SHALL BE USED FOR ALL PORTIONS OF ALL STRUCTURES WITH THE EXCEPTION THAT: CLASS AA CONCRETE SHALL BE USED IN BRIDGE SUPERSTRUCTURES, ABUTMENT BACKWALLS, AND APPROACH SLABS; AND CLASS B CONCRETE SHALL BE USED FOR SLOPE PROTECTION AND RIP RAP.

CONCRETE CHAMFERS:

UNLESS OTHERWISE NOTED ON THE PLANS, ALL EXPOSED CORNERS ON STRUCTURES SHALL BE CHAMFERED 3/4" WITH THE FOLLOWING EXCEPTIONS: TOP CORNERS OF CURBS MAY BE ROUNDED TO 1-1/2" RADIUS WHICH IS BUILT INTO CURB FORMS; CORNERS OF TRANSVERSE FLOOR EXPANSION JOINTS SHALL BE ROUNDED WITH A 1/4" FINISHING TOOL UNLESS OTHERWISE REQUIRED ON PLANS; AND CORNERS OF EXPANSION JOINTS IN THE ROADWAY FACES AND TOPS OF CURBS AND SIDEWALKS SHALL BE ROUNDED TO A 1/4" RADIUS WITH A FINISHING STONE OR TOOL UNLESS OTHERWISE REQUIRED ON PLANS.

DOWELS:

DOWELS WHEN INDICATED ON PLANS AS FOR CULVERT EXTENSIONS, SHALL BE EMBEDDED AT LEAST 12" INTO THE OLD CONCRETE AND GROUTED INTO PLACE WITH 1:2 CEMENT MORTAR.

ALLOWANCE FOR DEAD LOAD DEFLECTION, SETTLEMENT, ETC. IN CASTING SUPERSTRUCTURES:

BRIDGES SHALL BE BUILT ON THE GRADE OR VERTICAL CURVE SHOWN ON PLANS. SLABS, CURBS AND PARAPETS SHALL CONFORM TO THE GRADE OR CURVE.

ALL DIMENSIONS WHICH ARE GIVEN IN SECTION AND ARE AFFECTED BY DEAD LOAD DEFLECTIONS ARE DIMENSIONS AT CENTER LINE OF BEARING UNLESS OTHERWISE NOTED ON PLANS. IN SETTING FORMS FOR STEEL BEAM BRIDGES AND PRESTRESSED CONCRETE GIRDER BRIDGES, ADJUSTMENTS SHALL BE MADE DUE TO THE DEAD LOAD DEFLECTIONS FOR THE ELEVATIONS SHOWN. WHERE BLOCKS ARE SHOWN OVER BEAMS FOR BUILDING UP TO THE SLAB, THE VERTICAL DIMENSIONS OF THE BLOCKS SHALL BE ADJUSTED BETWEEN BEARINGS TO COMPENSATE FOR DEAD LOAD DEFLECTIONS, VERTICAL CURVE ORDINATE, AND ACTUAL BEAM CAMBER. WHERE BOTTOM OF SLAB IS IN LINE WITH BOTTOM OF TOP FLANGES, DEPTH OF SLAB BETWEEN BEARINGS SHALL BE ADJUSTED TO COMPENSATE FOR DEAD LOAD DEFLECTION, VERTICAL CURVE ORDINATE, AND ACTUAL BEAM CAMBER.

IN SETTING FALSEWORK AND FORMS FOR REINFORCED CONCRETE SPANS, AN ALLOWANCE SHALL BE MADE FOR DEAD LOAD DEFLECTIONS, SETTLEMENT OF FALSEWORK, AND PERMANENT CAMBER WHICH SHALL BE PROVIDED FOR IN ADDITION TO THE ELEVATIONS SHOWN. AFTER REMOVAL OF THE FALSEWORK, THE FINISHED STRUCTURES SHALL CONFORM TO THE PROFILE AND ELEVATIONS SHOWN ON THE PLANS AND CONSTRUCTION ELEVATIONS FURNISHED BY THE ENGINEER.

DETAILED DRAWINGS FOR FALSEWORK OR FORMS FOR BRIDGE SUPERSTRUCTURE AND ANY STRUCTURE OR PARTS OF A STRUCTURE AS NOTED ON THE PLANS SHALL BE SUBMITTED TO THE ENGINEER FOR APPROVAL BEFORE CONSTRUCTION OF THE FALSEWORK OR FORMS IS STARTED.

REINFORCING STEEL:

ALL REINFORCING STEEL SHALL BE DEFORMED. DIMENSIONS RELATIVE TO PLACEMENT OF REINFORCING ARE TO CENTERS OF BARS UNLESS OTHERWISE INDICATED IN THE PLANS. DIMENSIONS ON BAR DETAILS ARE TO CENTERS OF BARS OR ARE OUT TO OUT AS INDICATED ON PLANS.

WIRE BAR SUPPORTS SHALL BE PROVIDED FOR REINFORCING STEEL WHERE INDICATED ON THE PLANS. WHEN BAR SUPPORT PIECES ARE PLACED IN CONTINUOUS LINES, THEY SHALL BE SO PLACED THAT THE ENDS OF THE SUPPORTING WIRES SHALL BE LAPPED TO LOCK LEGS ON ADJOINING PIECES.

STRUCTURAL STEEL:

AT THE CONTRACTOR'S OPTION, HE MAY SUBSTITUTE 7/8" Ø SHEAR STUDS FOR THE 3/4" Ø STUDS SPECIFIED ON THE PLANS. THIS SUBSTITUTION SHALL BE MADE AT THE RATE OF 3 - 7/8" Ø STUDS FOR 4 - 3/4" Ø STUDS, AND STUD SPACING CHANGES SHALL BE MADE AS NECESSARY TO PROVIDE THE SAME EQUIVALENT NUMBER OF 7/8" Ø STUDS ALONG THE BEAM AS SHOWN FOR 3/4" Ø STUDS BASED ON THE RATIO OF 3 - 7/8" Ø STUDS FOR 4 - 3/4" Ø STUDS. STUDS OF THE LENGTH SPECIFIED ON THE PLANS MUST BE PROVIDED. THE MAXIMUM SPACING SHALL BE 2'-0".

EXCEPT AT THE INTERIOR SUPPORTS OF CONTINUOUS BEAMS WHERE THE COVER PLATE IS IN CONTACT WITH BEARING PLATE, THE CONTRACTOR MAY, AT HIS OPTION, SUBSTITUTE FOR THE COVER PLATES DESIGNATED ON THE PLANS COVER PLATES OF THE EQUIVALENT AREA PROVIDED THESE PLATES ARE AT LEAST 5/16" IN THICKNESS AND DO NOT EXCEED A WIDTH EQUAL TO THE FLANGE WIDTH LESS 2" OR A THICKNESS EQUAL TO 2 TIMES THE FLANGE THICKNESS. THE SIZE OF FILLET WELDS SHALL CONFORM TO THE REQUIREMENTS OF THE CURRENT ANSI/AASHTO/AWS "BRIDGE WELDING CODE". ELECTROSLAG WELDING WILL NOT BE PERMITTED.

WITH THE SOLE EXCEPTION OF EDGES AT SURFACES WHICH BEAR ON OTHER SURFACES, ALL SHARP EDGES AND ENDS OF SHAPES AND PLATES SHALL BE SLIGHTLY ROUNDED BY SUITABLE MEANS TO A RADIUS OF APPROXIMATELY 1/16 INCH OR EQUIVALENT FLAT SURFACE AT A SUITABLE ANGLE PRIOR TO PAINTING, GALVANIZING, OR METALLIZING.

HANDRAILS AND POSTS:

METAL STANDARDS AND FACES OF THE CONCRETE END POSTS FOR THE METAL RAIL SHALL BE SET NORMAL TO THE GRADE OF THE CURB, UNLESS OTHERWISE SHOWN ON PLANS. THE METAL RAIL AND TOPS OF CONCRETE POSTS USED WITH THE ALUMINUM RAIL SHALL BE BUILT PARALLEL TO THE GRADE OF THE CURB.

METAL HANDRAILS SHALL BE IN ACCORDANCE WITH THE PLANS. RAILS SHALL BE AS MANUFACTURED FOR BRIDGE RAILING. CASTINGS SHALL BE OF A UNIFORM APPEARANCE. FINS AND OTHER DEFORMATIONS RESULTING FROM CASTING OR OTHERWISE SHALL BE REMOVED IN A MANNER SO THAT A UNIFORM COLORING OF THE COMPLETED CASTING SHALL BE OBTAINED. CASTINGS WITH DISCOLORATIONS OR OF NON-UNIFORM COLORING WILL NOT BE ACCEPTED. CERTIFIED MILL REPORTS ARE REQUIRED FOR METAL RAILS AND POSTS.

SPECIAL NOTES:

GENERALLY, IN CASE OF DISCREPANCY, THIS STANDARD SHEET OF NOTES SHALL GOVERN OVER THE SPECIFICATIONS, BUT THE REMAINDER OF THE PLANS SHALL GOVERN OVER NOTES HEREON, AND SPECIAL PROVISIONS SHALL GOVERN OVER ALL. SEE SPECIFICATIONS ARTICLE 105-4.

ENGLISH

JANUARY, 1990

STD. NO. SN

REV. 6-16-95 EEM @ RGW REV. 5-7-03 RWW @ JTE REV. 10-1-11 MAA @ GM
REV. 8-16-99 RWW @ LES REV. 5-1-06 TLA @ GM

13-JAN-2012 09:48
R:\Structures\Plans\BD-5110V_SD_AS.dgn
vpatel