TIP PROJECT: BD-5110W

See Sheet 1-A For Index of Sheets
See Sheet 1-B For Standard Symbology Sheet

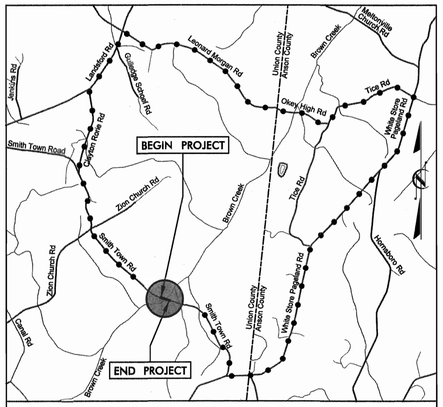

VICINITY MAP N.T.S.

FINAL PLANS

STATE OF NORTH CAROLINA
DIVISION OF HIGHWAYS

UNION COUNTY

STATE	STATE PROJECT REFERENCE NO.	SHEET NO.	TOTAL SHEETS
N.C.	BD-5110W	1	

STATE PROJ. NO.	F.A. PROJ. NO.	DESCRIPTION
45356.1.23	BRZ-1915(5)	P.E.
45356.2.23	BRZ-1915(5)	R /W & UTILITIES
45356.3.23	BRZ-1915(5)	CONST.

LOCATION: BRIDGE #109 OVER BROWN CREEK ON SR 1915 (SMITH TOWN ROAD)

TYPE OF WORK: GRADING, PAVING, DRAINAGE & STRUCTURE

NSRS 2007 NAD 83

BEGIN TIP PROJECT BD-5110W
-L- STA. 10+65.00

END TIP PROJECT BD-5110W
-L- STA. 14+90.00

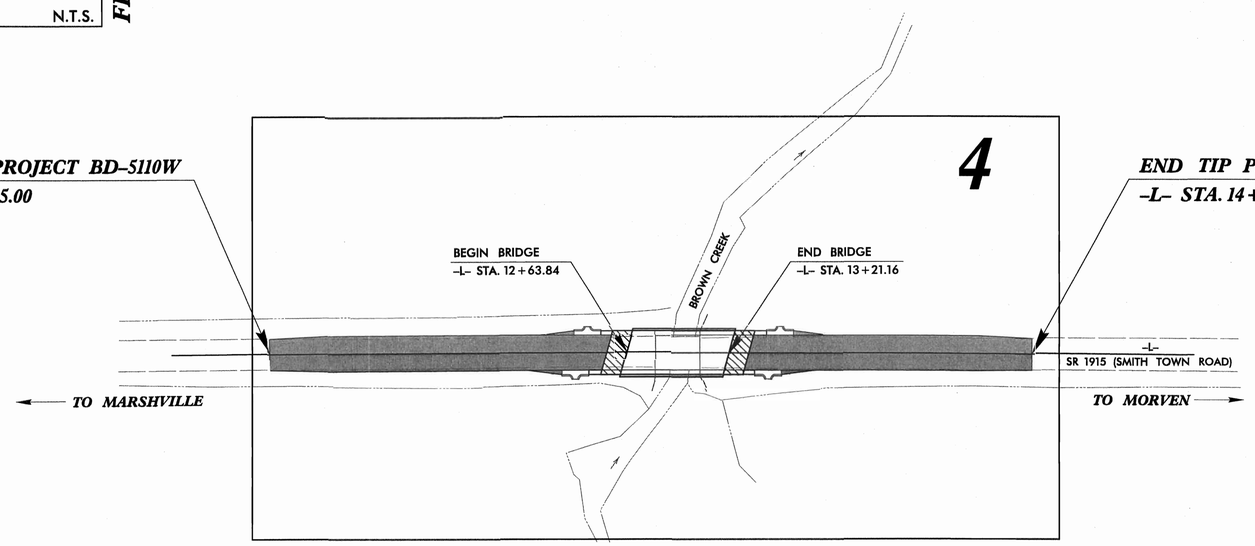

CONTRACT:

FINAL PLANS
3/5/2012

GRAPHIC SCALES

20 10 0 20 40
PLANS

20 10 0 20 40
PROFILE (HORIZONTAL)

4 2 0 4 8
PROFILE (VERTICAL)

DESIGN DATA

ADT 2012 = 340
ADT 2035 = 770
DHV = N/A
D = N/A
T = 6%
V = 45 MPH

FUNC. CLASSIFICATION: LOCAL

PROJECT LENGTH

LENGTH OF ROADWAY TIP PROJECT BD-5110W = 0.069 MILES
LENGTH OF STRUCTURE TIP PROJECT BD-5110W = 0.011 MILES
TOTAL LENGTH OF TIP PROJECT BD-5110W = 0.080 MILES

NCDOT CONTACT: GREG JONES, PE
Division Bridge Manager

PLANS PREPARED FOR THE NCDOT BY:
STV/RALPH WHITEHEAD ASSOCIATES, INC.
1000 West Morehead St., Ste. 200, Charlotte NC, 28208
NC License Number F-0991

2012 STANDARD SPECIFICATIONS

RIGHT OF WAY DATE:
SEPTEMBER 22, 2011

LETTING DATE:
APRIL 18, 2012

JOHN N. JOHNSON, PE
PROJECT ENGINEER

MAAMOON K. ABDELAZIZ
PROJECT DESIGN ENGINEER

HYDRAULICS ENGINEER
NORTH CAROLINA PROFESSIONAL SEAL 038063 ENGINEER DARWIN C. MORRISON
3/5/12 P.E.
SIGNATURE:

ROADWAY DESIGN ENGINEER
NORTH CAROLINA PROFESSIONAL SEAL 22115 ENGINEER JOHN N. JOHNSON
3-5-12 P.E.
SIGNATURE:

DIVISION OF HIGHWAYS STATE OF NORTH CAROLINA

STATE OF NORTH CAROLINA DEPARTMENT OF TRANSPORTATION

P.E.
STATE HIGHWAY DESIGN ENGINEER

PROJECT REFERENCE NO.	SHEET NO.
BD-5110W	1-A
R/W SHEET NO.	

STV / Ralph Whitehead Associates, Inc.
1000 West Morehead St., Ste. 200
Charlotte, NC 28208
NC License Number F-0991

ROADWAY DESIGN ENGINEER

NORTH CAROLINA PROFESSIONAL SEAL 22115 ENGINEER JOHN N. JOHNSON

3-5-12

INDEX OF SHEETS

SHEET NUMBER	SHEET
1	TITLE SHEET
1-A	INDEX OF SHEETS, GENERAL NOTES, AND LIST OF STANDARD DRAWINGS
1-B	CONVENTIONAL SYMBOLS
2	DETAIL SHEET
3	SUMMARIES AND TYPICALS
4	PLAN AND PROFILE SHEET
TCP-1 THRU TCP-2	TRAFFIC CONTROL PLANS
UO-1 THRU UO-2	UTILITIES BY OTHERS
EC-1 THRU EC-4	EROSION CONTROL PLANS
X-1 THRU X-2	CROSS-SECTIONS

GENERAL NOTES

GENERAL NOTES: 2012 SPECIFICATIONS
EFFECTIVE: 01-01-2012

GRADE LINE:
GRADING AND SURFACING:

THE GRADE LINES SHOWN DENOTE THE FINISHED ELEVATION OF THE PROPOSED SURFACING AT GRADE POINTS SHOWN ON THE TYPICAL SECTIONS. GRADE LINES MAY BE ADJUSTED AT THEIR BEGINNING AND ENDING AND AT STRUCTURES AS DIRECTED BY THE ENGINEER IN ORDER TO SECURE A PROPER TIE-IN.

CLEARING:

CLEARING ON THIS PROJECT SHALL BE PERFORMED TO THE LIMITS ESTABLISHED BY METHOD II.

SUPERELEVATION:

ALL CURVES ON THIS PROJECT SHALL BE SUPERELEVATED IN ACCORDANCE WITH STD. NO. 225.04 USING THE RATE OF SUPERELEVATION AND RUNOFF SHOWN ON THE PLANS. SUPERELEVATION IS TO BE REVOLVED ABOUT THE GRADE POINTS SHOWN ON THE TYPICAL SECTIONS.

SHOULDER CONSTRUCTION:

ASPHALT, EARTH, AND CONCRETE SHOULDER CONSTRUCTION ON THE HIGH SIDE OF SUPERELEVATED CURVES SHALL BE IN ACCORDANCE WITH STD. NO. 560.01.

GUARDRAIL:

THE GUARDRAIL LOCATIONS SHOWN ON THE PLANS MAY BE ADJUSTED DURING CONSTRUCTION AS DIRECTED BY THE ENGINEER. THE CONTRACTOR SHOULD CONSULT WITH THE ENGINEER PRIOR TO ORDERING GUARDRAIL MATERIAL.

END BENTS:

THE ENGINEER SHALL CHECK THE STRUCTURE END BENT PLANS, DETAILS, AND CROSS-SECTION PRIOR TO SETTING OF THE SLOPE STAKES FOR THE EMBANKMENT OR EXCAVATION APPROACHING A BRIDGE.

RIGHT-OF-WAY MARKERS:

ALL RIGHT-OF-WAY MARKERS ON THIS PROJECT SHALL BE PLACED BY CONTRACT.

STANDARD DRAWINGS

2012 ROADWAY ENGLISH STANDARD DRAWINGS EFF. January, 2012

The following Roadway Standards as appear in "Roadway Standard Drawings" Highway Design Branch - N. C. Department of Transportation - Raleigh, N. C., Dated January, 2012 are applicable to this project and by reference hereby are considered a part of these plans:

STD.NO.	TITLE
DIVISION 2 - EARTHWORK	
200.02	Method of Clearing - Method II
225.02	Guide for Grading Subgrade - Secondary and Local
225.04	Method of Obtaining Superelevation - Two Lane Pavement
DIVISION 5 - SUBGRADE, BASES AND SHOULDERS	
560.01	Method of Shoulder Construction - High Side of Superelevated Curve - Method I
DIVISION 8 - INCIDENTALS	
846.01	Concrete Curb, Gutter and Curb & Gutter
862.01	Guardrail Placement
862.02	Guardrail Installation
862.03	Structure Anchor Units
876.02	Guide for Rip Rap at Pipe Outlets
DIVISION 11 - WORK ZONE TRAFFIC CONTROL	
1110.01	Stationary Work Zone Signs - Mounting Height & Lateral Clearance
1145.01	Barricades - Type III
DIVISION 16 - EROSION CONTROL AND ROADSIDE DEVELOPMENT	
1605.01	Temporary Silt Fence
1606.01	Special Sediment Control Fence
1607.01	Gravel Construction Entrance
1622.01	Guide for Temporary Berms and Slope Drains
1630.01	Riser Basin
1630.03	Temporary Silt Ditch
1630.04	Stilling Basin for Pumped Effluent
1630.05	Temporary Diversion
1630.06	Special Stilling Basin
1632.01	Rock Inlet Sediment Trap Type A
1632.02	Rock Inlet Sediment Trap Type B
1632.03	Rock Inlet Sediment Trap Type C
1633.01	Temporary Rock Silt Check Type A
1633.02	Temporary Rock Silt Check Type B
1634.01	Temporary Rock Sediment Dam Type A
1634.02	Temporary Rock Sediment Dam Type B
1635.01	Rock Pipe Inlet Sediment Trap Type A
1635.02	Rock Pipe Inlet Sediment Trap Type B

PROJECT REFERENCE NO.	SHEET NO.
BD-5110W	1-B

Note: Not to Scale

****S.U.E. = Subsurface Utility Engineering***

STATE OF NORTH CAROLINA
DIVISION OF HIGHWAYS

CONVENTIONAL PLAN SHEET SYMBOLS

BOUNDARIES AND PROPERTY:

- State Line
- County Line
- Township Line
- City Line
- Reservation Line
- Property Line
- Existing Iron Pin — EIP
- Property Corner
- Property Monument — ECM
- Parcel/Sequence Number — 23
- Existing Fence Line
- Proposed Woven Wire Fence
- Proposed Chain Link Fence
- Proposed Barbed Wire Fence
- Existing Wetland Boundary — WLB
- Proposed Wetland Boundary — WLB
- Existing Endangered Animal Boundary — EAB
- Existing Endangered Plant Boundary — EPB

BUILDINGS AND OTHER CULTURE:

- Gas Pump Vent or U/G Tank Cap
- Sign — S
- Well — W
- Small Mine
- Foundation
- Area Outline
- Cemetery
- Building
- School
- Church
- Dam

HYDROLOGY:

- Stream or Body of Water
- Hydro, Pool or Reservoir
- Jurisdictional Stream — JS
- Buffer Zone 1 — BZ 1
- Buffer Zone 2 — BZ 2
- Flow Arrow
- Disappearing Stream
- Spring
- Wetland
- Proposed Lateral, Tail, Head Ditch — FLOW
- False Sump

RAILROADS:

- Standard Gauge — CSX TRANSPORTATION
- RR Signal Milepost — MILEPOST 35
- Switch — SWITCH
- RR Abandoned
- RR Dismantled

RIGHT OF WAY:

- Baseline Control Point
- Existing Right of Way Marker
- Existing Right of Way Line
- Proposed Right of Way Line — RW
- Proposed Right of Way Line with Iron Pin and Cap Marker — RW
- Proposed Right of Way Line with Concrete or Granite Marker — RW
- Existing Control of Access — CA
- Proposed Control of Access — CA
- Existing Easement Line — E
- Proposed Temporary Construction Easement — E
- Proposed Temporary Drainage Easement — TDE
- Proposed Permanent Drainage Easement — PDE
- Proposed Permanent Utility Easement — PUE
- Proposed Temporary Utility Easement — TUE
- Proposed Permanent Easement with Iron Pin and Cap Marker

ROADS AND RELATED FEATURES:

- Existing Edge of Pavement
- Existing Curb
- Proposed Slope Stakes Cut — C
- Proposed Slope Stakes Fill — F
- Proposed Wheel Chair Ramp — WCR
- Existing Metal Guardrail
- Proposed Guardrail
- Existing Cable Guiderail
- Proposed Cable Guiderail
- Equality Symbol
- Pavement Removal

VEGETATION:

- Single Tree
- Single Shrub
- Hedge
- Woods Line
- Orchard
- Vineyard — Vineyard

EXISTING STRUCTURES:

MAJOR:

- Bridge, Tunnel or Box Culvert — CONC
- Bridge Wing Wall, Head Wall and End Wall — CONC WW

MINOR:

- Head and End Wall — CONC HW
- Pipe Culvert
- Footbridge
- Drainage Box: Catch Basin, DI or JB — CB
- Paved Ditch Gutter
- Storm Sewer Manhole — S
- Storm Sewer — S

UTILITIES:

POWER:

- Existing Power Pole
- Proposed Power Pole
- Existing Joint Use Pole
- Proposed Joint Use Pole
- Power Manhole — P
- Power Line Tower
- Power Transformer
- U/G Power Cable Hand Hole — HH
- H-Frame Pole
- Recorded U/G Power Line — P
- Designated U/G Power Line (S.U.E.*) — P

TELEPHONE:

- Existing Telephone Pole
- Proposed Telephone Pole
- Telephone Manhole — T
- Telephone Booth
- Telephone Pedestal — T
- Telephone Cell Tower
- U/G Telephone Cable Hand Hole — HH
- Recorded U/G Telephone Cable — T
- Designated U/G Telephone Cable (S.U.E.*) — T
- Recorded U/G Telephone Conduit — TC
- Designated U/G Telephone Conduit (S.U.E.*) — TC
- Recorded U/G Fiber Optics Cable — T FO
- Designated U/G Fiber Optics Cable (S.U.E.*) — T FO

WATER:

- Water Manhole — W
- Water Meter
- Water Valve
- Water Hydrant
- Recorded U/G Water Line — W
- Designated U/G Water Line (S.U.E.*) — W
- Above Ground Water Line — A/G Water

TV:

- TV Satellite Dish
- TV Pedestal — C
- TV Tower
- U/G TV Cable Hand Hole — HH
- Recorded U/G TV Cable — TV
- Designated U/G TV Cable (S.U.E.*) — TV
- Recorded U/G Fiber Optic Cable — TV FO
- Designated U/G Fiber Optic Cable (S.U.E.*) — TV FO

GAS:

- Gas Valve
- Gas Meter
- Recorded U/G Gas Line — G
- Designated U/G Gas Line (S.U.E.*) — G
- Above Ground Gas Line — A/G Gas

SANITARY SEWER:

- Sanitary Sewer Manhole
- Sanitary Sewer Cleanout
- U/G Sanitary Sewer Line — SS
- Above Ground Sanitary Sewer — A/G Sanitary Sewer
- Recorded SS Forced Main Line — FSS
- Designated SS Forced Main Line (S.U.E.*) — FSS

MISCELLANEOUS:

- Utility Pole
- Utility Pole with Base
- Utility Located Object
- Utility Traffic Signal Box — S
- Utility Unknown U/G Line — ?UTL
- U/G Tank; Water, Gas, Oil
- A/G Tank; Water, Gas, Oil
- U/G Test Hole (S.U.E.*)
- Abandoned According to Utility Records — AATUR
- End of Information — E.O.I.

r:\roadway\proj\BD5110W_rdy_psts01B.dgn

3/5/2012

PROJECT REFERENCE NO.	SHEET NO.
BD-5110W	2

DIVISION OF HIGHWAYS
STATE OF NORTH CAROLINA

STATE OF
NORTH CAROLINA
DEPT. OF TRANSPORTATION
DIVISION OF HIGHWAYS
RALEIGH, N.C.

ENGLISH DETAIL DRAWING FOR
MODIFIED CONCRETE FLUME
WITH CONCRETE OR RIP-RAP DITCH

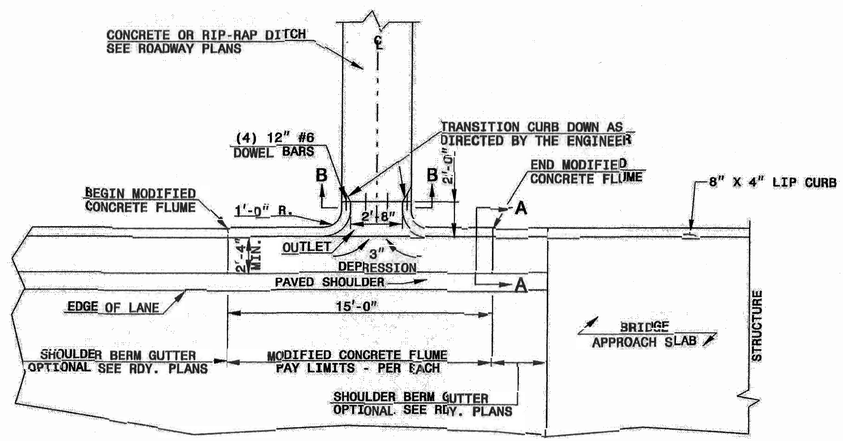

PLAN VIEW

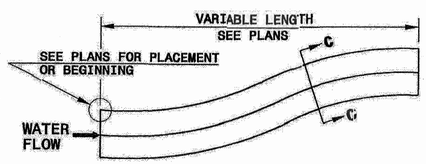

DOWNGRADE OR SAG

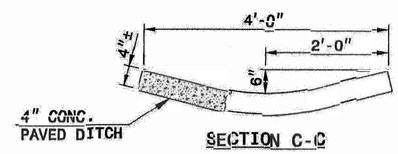

SECTION C-C

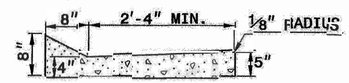

SECTION A-A

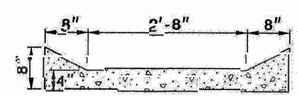

SECTION B-B

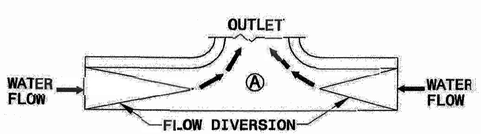

SAG

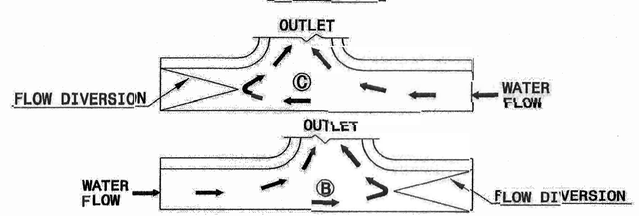

DOWN GRADE

FLOW DIVERSION EXAMPLES

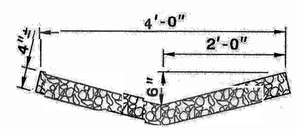

RIP-RAP LINED DITCH

NOTES:

- CONSTRUCT MODIFIED CONCRETE FLUME AND SHOULDER BERM GUTTER IN ACCORDANCE WITH THIS DETAIL.
- CONSTRUCT CONCRETE DITCH IN ACCORDANCE WITH STD. DWG. NO. 850.01.
- CONSTRUCT RIP RAP LINED DITCH IN ACCORDANCE WITH THIS DETAIL, IF CALLED FOR IN PLANS.
- CONCRETE OR RIP RAP LINED DITCH SHALL BE THE TYPE AND LENGTH SPECIFIED BY THE ROADWAY PLANS. THE DITCH SHALL TERMINATE AS SHOWN ON THE PLANS. IF NO TERMINATION IS INDICATED PLACE RIP-RAP AT THE END OF THE DITCH AS INDICATED BY STD. DWG. 876.02 FOR AN 18" PIPE. TRANSITIONS FROM THE DITCH TO TERMINATION SHALL BE AS DIRECTED BY THE ENGINEER.
- MODIFICATIONS SHALL BE AS DICTATED BY SITE CONDITIONS AND DIRECTED BY THE ENGINEER.

NORTH CAROLINA PROFESSIONAL SEAL 022966 ENGINEER JOEL S. HOWERTON 2/24/12

SHEET 1 OF 1
MODFLMDTCH

STATE OF
NORTH CAROLINA
DEPT. OF TRANSPORTATION
DIVISION OF HIGHWAYS
RALEIGH, N.C.

ENGLISH DETAIL DRAWING FOR
MODIFIED CONCRETE FLUME
WITH CONCRETE OR RIP-RAP DITCH

SHEET 1 OF 1
MODFLMDTCH

R:\Roadway\Proj\BD5110W_rdy_psh02.dgn

2/23/2012

DIVISION OF HIGHWAYS
STATE OF NORTH CAROLINA

PROJECT REFERENCE NO.	SHEET NO.
BD-5110W	3
R/W SHEET NO.	

ROADWAY DESIGN ENGINEER

NORTH CAROLINA PROFESSIONAL SEAL 22115 ENGINEER JOHN N. JOHNSON

3-5-12

PAVEMENT DESIGN ENGINEER

PAVEMENT DESIGN PROVIDED BY NCDOT

STV / Ralph Whitehead Associates, Inc.
1000 West Morehead St., Ste. 200
Charlotte, NC 28208
NC License Number F-0991

EARTHWORK SUMMARY (IN CUBIC YARDS)

CHAIN	FROM STATION	TO STATION	SIDE	UNCL. EXCAVATION	UNDERCUT	EMBT+%	BORROW	WASTE
-L-	10+70.00	11+76.82	LT & RT	37		170	133	
SUBTOTAL SUMMARY NO. 1				37		170	133	
-L-	12+49.16	13+50.00	LT & RT	4		30	26	
SUBTOTAL SUMMARY NO. 2				4		30	26	
SUBTOTAL SUMMARY 1-2				41		200	159	
LOSS DUE TO CLEARING AND GRUBBING				-154			154	
PROJECT TOTAL				41		200	159	
WASTE IN LIEU OF BORROW								
ESTIMATE 5% FOR TOPSOIL ON BORROW PITS							16	
GRAND TOTAL				-113		200	329	
SAY				0			330	

NOTE: Earthwork quantities are calculated by the Roadway Design Unit. These earthwork quantities are based in part on subsurface data provided by the Geotechnical Engineering Unit.

Approximate quantities only. Unclassified Excavation, Borrow Excavation, Fine Grading, Clearing and Grubbing, Breaking of Existing Pavement, and Removal of Existing Pavement will be paid for at the contract lump sum price for "Grading."

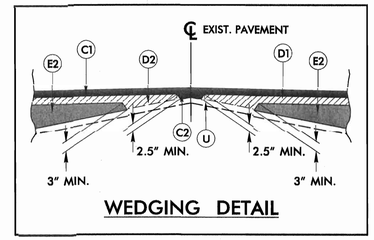

WEDGING DETAIL

	PAVEMENT SCHEDULE
C1	PROP. APPROX. 1.5" ASPHALT CONCRETE SURFACE COURSE, TYPE S9.5B, AT AN AVERAGE RATE OF 168 LBS. PER SQ. YD.
C2	PROP. VAR. DEPTH ASPHALT CONCRETE SURFACE COURSE, TYPE S9.5B, AT AN AVERAGE RATE OF 112 LBS. PER SQ. YD. PER 1" DEPTH. TO BE PLACED IN LAYERS NOT LESS THAN 1.5" IN DEPTH OR GREATER THAN 2.0" IN DEPTH.
D1	PROP. APPROX. 3.5" ASPHALT CONCRETE INTERMEDIATE COURSE, TYPE I19.0B, AT AN AVERAGE RATE OF 399 LBS. PER SQ. YD.
D2	PROP. VAR. DEPTH ASPHALT CONCRETE INTERMEDIATE COURSE, TYPE I19.0B, AT AN AVERAGE RATE OF 114 LBS. PER SQ. YD. PER 1" DEPTH. TO BE PLACED IN LAYERS NOT LESS THAN 2.5" IN DEPTH OR GREATER THAN 4" IN DEPTH.
E1	PROP. APPROX. 3" ASPHALT CONCRETE BASE COURSE, TYPE B25.0B, AT AN AVERAGE RATE OF 342 LBS. PER SQ. YD.
E2	PROP. VAR. DEPTH ASPHALT CONCRETE BASE COURSE, TYPE B25.0B, AT AN AVERAGE RATE OF 114 LBS. PER SQ. YD. PER 1" DEPTH. TO BE PLACED IN LAYERS NOT LESS THAN 3.0" IN DEPTH OR GREATER THAN 5.5" IN DEPTH.
R	CONCRETE SHOULDER BERM GUTTER
T	EARTH MATERIAL
U	EXISTING PAVEMENT
W	PAVEMENT WEDGING

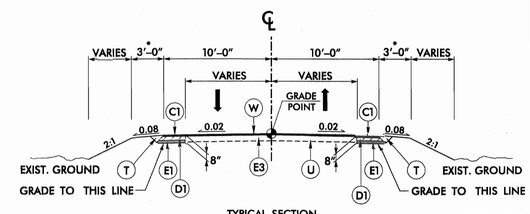

TYPICAL SECTION
-L- STA. 10+65.00 TO 12+63.84 (BEGIN BRIDGE)
-L- STA. 13+21.16 (END BRIDGE) TO 14+90.00

* 6'-0" WITH GUARDRAIL
** ALL PAVEMENT SLOPES ARE 1:1 UNLESS SHOWN OTHERWISE.
*** SEE DETAIL A FOR SHOULDER BERM GUTTER LOCATION

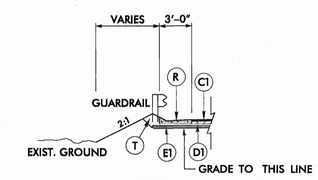

DETAIL A
-L- STA. 12+42.99 TO 12+50.14 (RT.)
-L- STA. 12+49.69 TO 12+55.54 (LT.)
-L- STA. 13+29.50 TO 13+35.35 (RT)
-L- STA. 13+34.82 TO 13+41.96 (LT.)

* W MEASURED FROM "N" AT THE BEGINNING OF THE ANCHOR TO "N" AT THE END OF THE ANCHOR.
"N" = DISTANCE FROM EDGE OF LANE TO FACE OF GUARDRAIL.
TOTAL SHOULDER WIDTH = DISTANCE FROM EDGE OF TRAVEL LANE TO SHOULDER BREAK POINT.
FLARE LENGTH = DISTANCE FROM LAST SECTION OF PARALLEL GUARDRAIL TO END OF GUARDRAIL.
W = TOTAL WIDTH OF FLARE FROM BEGINNING OF TAPER TO END OF GUARDRAIL.
G = GATING IMPACT ATTENUATOR TYPE 350
NG = NON-GATING IMPACT ATTENUATOR TYPE 350

GUARDRAIL SUMMARY

SURVEY LINE	BEG. STA.	END STA.	LOCATION	LENGTH			WARRANT POINT		"N" DIST. FROM E.O.L.	TOTAL SHOUL. WIDTH	FLARE LENGTH		W*		ANCHORS								IMPACT ATTENUATOR TYPE 350			SINGLE FACED GUARDRAIL	REMOVE EXISTING GUARDRAIL	REMOVE AND STOCKPILE EXISTING GUARDRAIL	REMARKS
				STRAIGHT	SHOP CURVED	DOUBLE FACED	APPROACH END	TRAILING END			APPROACH END	TRAILING END	APPROACH END	TRAILING END	XI MOD	B-77	GRAU 350	M-350	TYPE III	CAT-1	VI MOD	BIC	AT-1	EA	G	NG				
-L-	11+79.19	12+60.50	RT	81.25			12+60.50		2.35-3.18	5.35-6.18	81.25'		0.77'				1		1											
-L-	11+85.99	12+67.18	LT	81.25				12+67.18	2.41-3.62	5.41-6.62		81.25'		1.21'			1		1											
-L-	13+17.84	13+99.20	RT	81.25				13+17.84	2.37-3.21	5.37-6.21		81.25'		0.79'			1		1											
-L-	13+24.47	14+05.71	LT	81.25			13+24.47		2.42-3.65	5.42-6.65	81.25'		1.23'				1		1											
			TOTAL:	325.0													4		4											
			TOTAL ANCHOR LENGTH:	275.0																										
			TOTAL GUARDRAIL LENGTH:	50.0																										
			SAY:	50.0																										

r:\roadway\proj\BD5110W_rdy_psh03.dgn

3/5/2012

PROJECT REFERENCE NO.	SHEET NO.
BD-5110W	4
R/W SHEET NO.	
ROADWAY DESIGN ENGINEER	HYDRAULICS ENGINEER

NORTH CAROLINA PROFESSIONAL SEAL 22115 ENGINEER JOHN N. JOHNSON 3-5-12

NORTH CAROLINA PROFESSIONAL SEAL 038093 ENGINEER D. C. MORRISON 3/5/12

STV / Ralph Whitehead Associates, Inc.
1000 West Morehead St. Ste. 200
Charlotte, NC 28208
NC License Number F-0991

DATUM DESCRIPTION

THE LOCALIZED COORDINATE SYSTEM DEVELOPED FOR THIS PROJECT IS BASED ON THE STATE PLANE COORDINATES ESTABLISHED BY NCDOT FOR MONUMENT "BD-5110-W BL-2"
WITH NAD 83/NSRS 2007 STATE PLANE GRID COORDINATES OF
NORTHING: 400183.022(ft) EASTING: 1600186.377(ft)
ELEVATION: 341.82(ft)
THE AVERAGE COMBINED GRID FACTOR USED ON THIS PROJECT (GROUND TO GRID) IS: 0.999886
THE N.C. LAMBERT GRID BEARING AND LOCALIZED HORIZONTAL GROUND DISTANCE FROM "BD-5110-W BL-2" TO -L- POT STATION 10+65.00 IS N 69° 32' 48.215" W 243.585 (ft)
ALL LINEAR DIMENSIONS ARE LOCALIZED HORIZONTAL DISTANCES
VERTICAL DATUM USED IS NAVD 88

BL-1	N 400113.007	E 1600477.254	ELEV 341.58
BL-2	N 400183.022	E 1600186.377	ELEV 341.82
BL-3	N 400283.197	E 1599874.102	ELEV 341.26

DETAIL A
SPECIAL LATERAL DITCH
(Not to Scale)

Natural Ground, 2:1, d, D, 4:1 or Flatter, Front Ditch Slope

Type of Liner= Matting for Erosion Control
Min. D= 1.5 Ft.
Max. d= 1.5 Ft.

FROM STA. 11+50 TO STA. 12+79 RT.

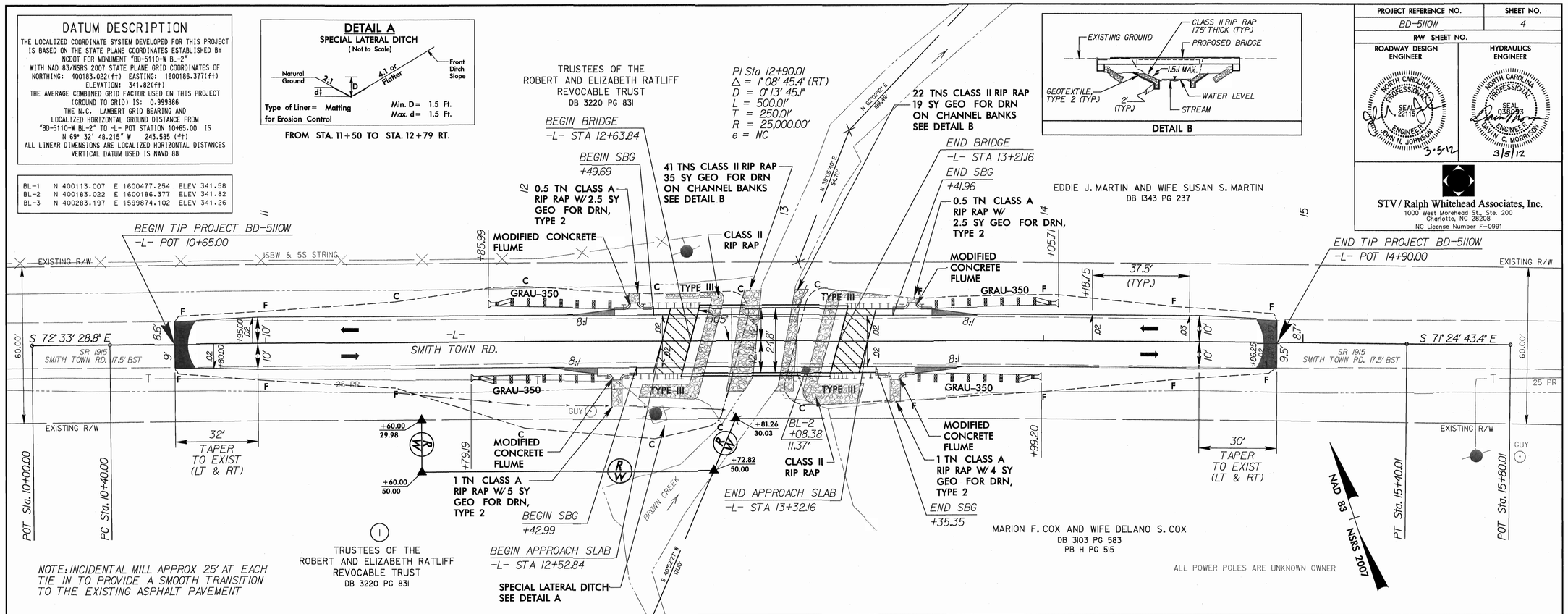

DETAIL B

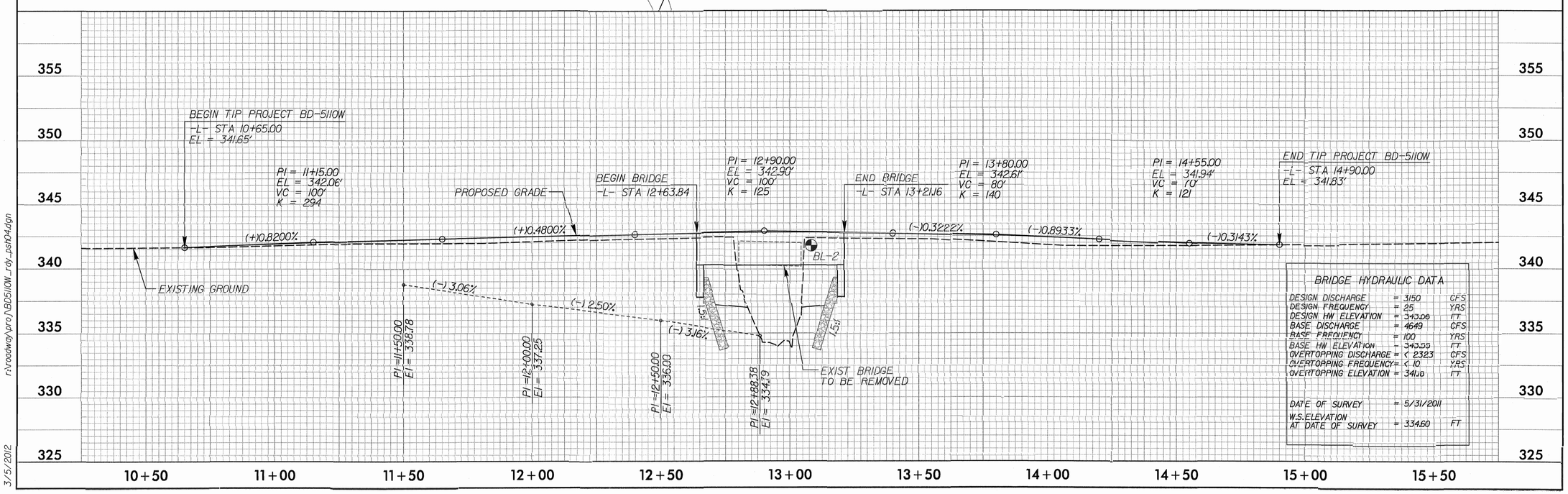

BRIDGE HYDRAULIC DATA

DESIGN DISCHARGE	= 3150	CFS
DESIGN FREQUENCY	= 25	YRS
DESIGN HW ELEVATION	= 343.06	FT
BASE DISCHARGE	= 4649	CFS
BASE FREQUENCY	= 100	YRS
BASE HW ELEVATION	= 343.55	FT
OVERTOPPING DISCHARGE	= < 2323	CFS
OVERTOPPING FREQUENCY	= < 10	YRS
OVERTOPPING ELEVATION	= 341.10	FT
DATE OF SURVEY	= 5/31/2011	
W.S. ELEVATION AT DATE OF SURVEY	= 334.60	FT

r:\roadway\proj\BD5110W_rdy_psh04.dgn

3/5/2012

PROJECT REFERENCE NO.	SHEET NO.
BD-5110W	TCP-1
R/W SHEET NO.	

STV / Ralph Whitehead Associates, Inc.
1000 West Morehead St., Ste. 200
Charlotte, NC 28208
NC License Number F-0991

ROADWAY DESIGN ENGINEER

NORTH CAROLINA PROFESSIONAL SEAL 22115 ENGINEER JOHN N. JOHNSON

3-5-12

DETOUR ROUTE

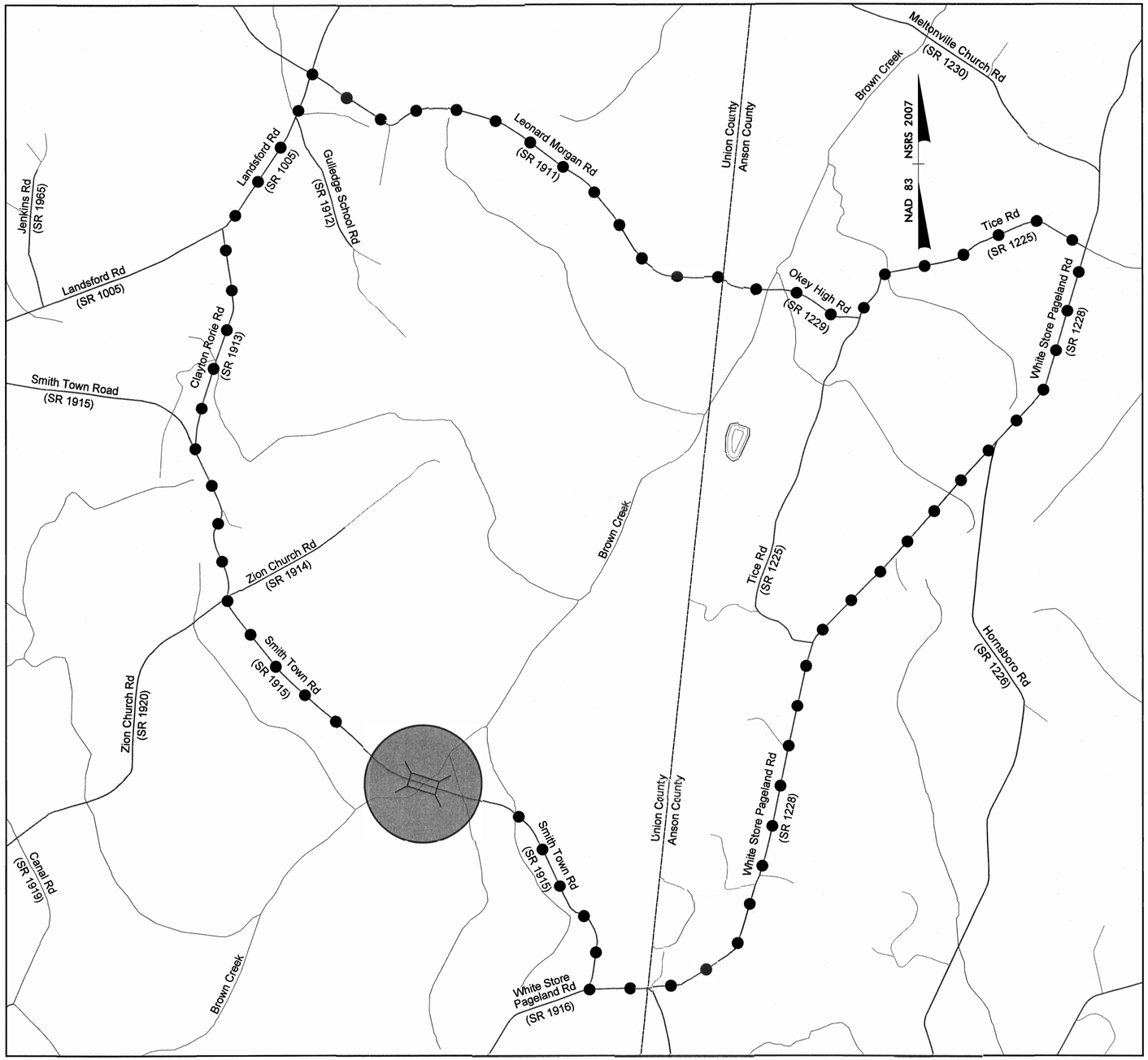

Scale Approximately 1" = 1000'

r:\Traffic\Traffic Control\TCP\BD5110W_rdy_tcp01.dgn

3/5/2012

PROJECT REFERENCE NO.	SHEET NO.
BD-5110W	TCP-2
R/W SHEET NO.	

TEMPORARY ROAD CLOSURE

CLOSURE BEYOND DETOUR POINT

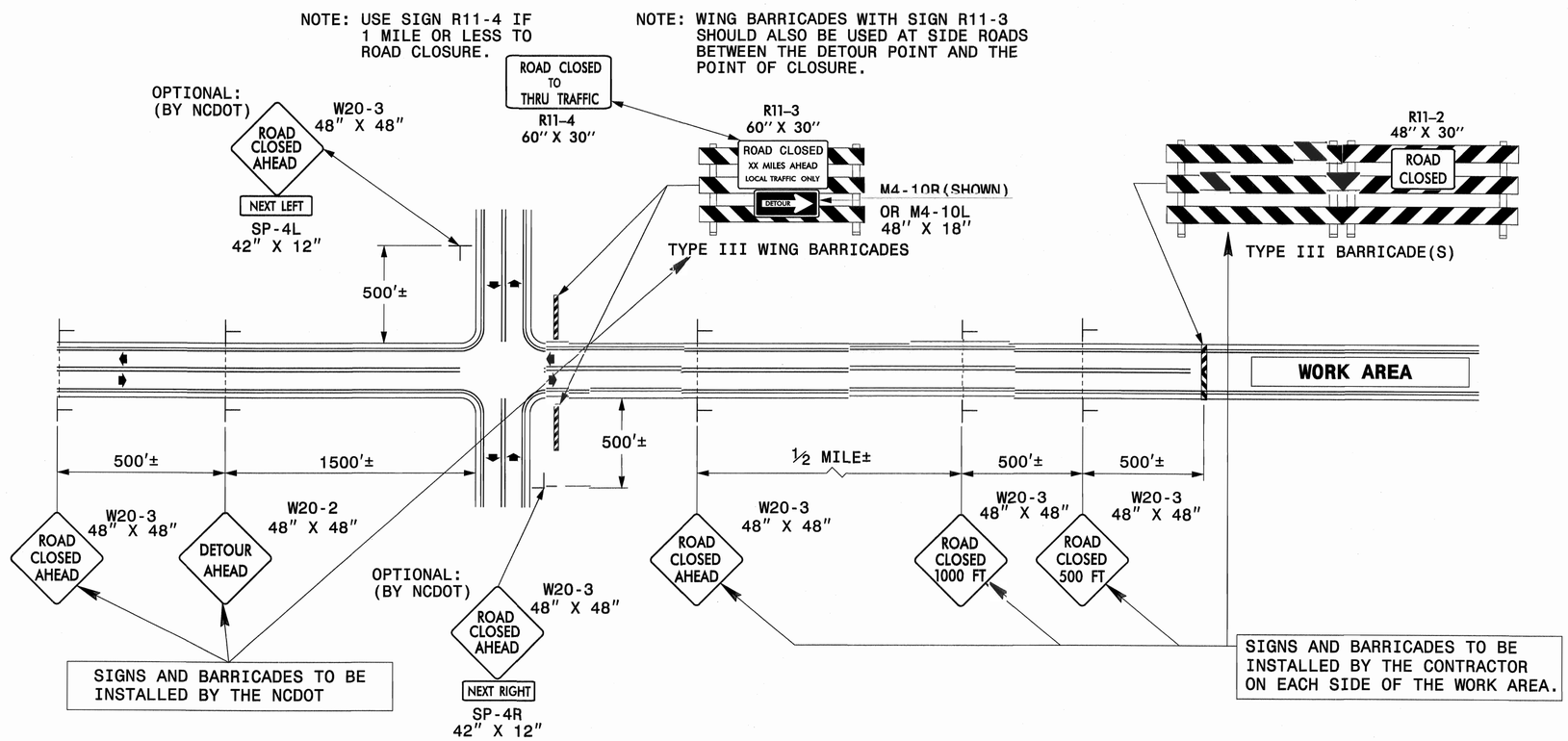

GENERAL NOTES

1-IF NECESSARY USE THIS STD. FOR TWO-LANE, TWO-WAY, AND MULTILANE DIVIDED AND UNDIVIDED ROADWAYS.

2-INSTALLATION OF DETOUR ROUTING PANELS, TEMPORARY ROUTE MARKERS, DESTINATION SIGNS, AND ANY NECESSARY MODIFICATIONS TO EXISTING OR PROPOSED REGULATORY OR WARNING SIGNS WILL BE MADE BY NCDOT FORCES UNLESS OTHERWISE DESIGNATED IN THE PLANS. PROVIDE A MINIMUM 21 CALENDAR DAY NOTICE TO STATE FORCES BEFORE A ROADWAY IS CLOSED TO TRAFFIC SUCH THAT THE NECESSARY PROVISIONS CAN BE MADE TO INSTALL DETOUR ROUTE SIGNS, INFORM LOCAL EMERGENCY AND LAW ENFORCEMENT PERSONNEL, SCHOOLS, OR ANY OTHER PARTIES AFFECTED BY THE ROAD CLOSURE.

3-INSTALL SIGNS BEFORE THE BARRICADES WHEN CLOSING THE ROADWAY TO TRAFFIC. REMOVE BARRICADES BEFORE SIGNS WHEN OPENING THE ROADWAY TO TRAFFIC. INSTALL/REMOVE SIGNS AND BARRICADES WITHIN THE SAME CALENDAR DAY.

4-USE ADDITIONAL TYPE III BARRICADES IN STAGGERED LOCATIONS SUPPLEMENTED WITH SIGN R11-4 "ROAD CLOSED TO THRU TRAFFIC" IN THE EVENT THAT TRAFFIC MUST BE MAINTAINED BEYOND THE DETOUR POINT.

5-DO NOT DISPLAY FRACTIONS OR DECIMALS ON SIGN R11-3 "ROAD CLOSED XX MILES AHEAD".

6-POSITION WING BARRICADES ON THE SHOULDERS AND SLOPE THE STRIPES DOWNWARD IN THE DIRECTION TOWARD WHICH TRAFFIC MUST TURN IN DETOURING.

7-USE PORTABLE SIGNS IF ROAD CLOSURE IS TO BE IMPLEMENTED FOR LESS THAN ONE DAY OR FOR EMERGENCIES.

LEGEND

- ├ STATIONARY SIGN
- ⬆ DIRECTION OF TRAFFIC FLOW

r:\Traffic\TrafficControl\TCP\BD5110W_rdy_tcp02.dgn
3/5/2012

TIP PROJECT: BD-5110W

T.I.P. NO.	SHEET NO.
BD-5110W	UO-1

See Sheet 1A For Index of Sheets
See Sheet 1B For Standard Symbology Sheet

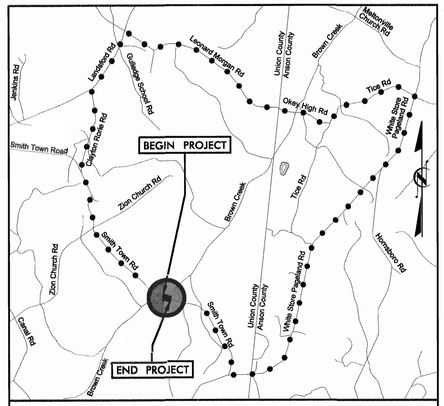

VICINITY MAP N.T.S.

STATE OF NORTH CAROLINA
DIVISION OF HIGHWAYS

UTILITIES BY OTHERS PLANS
UNION COUNTY

LOCATION: BRIDGE #109 OVER BROWN CREEK ON SR 1915 (SMITH TOWN ROAD)

TYPE OF WORK: AERIAL & UNDERGROUND TELEPHONE

NAD 83

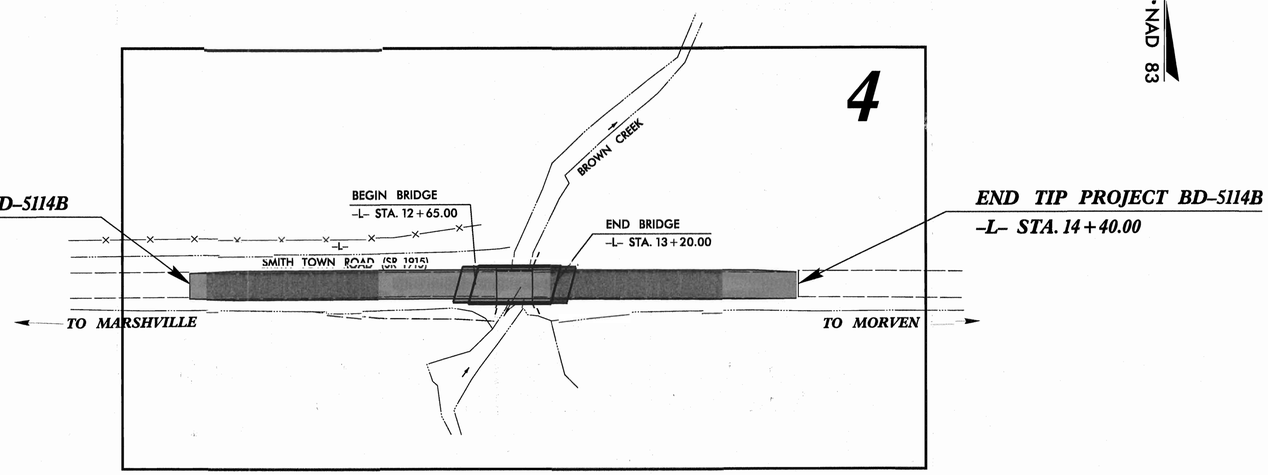

BEGIN TIP PROJECT BD-5114B
-L- STA. 11+40.00

END TIP PROJECT BD-5114B
-L- STA. 14+40.00

GRAPHIC SCALES

20 10 0 20 40
PLANS

INDEX OF SHEETS

SHEET NO.	DESCRIPTION
UO-1	TITLE SHEET
UO-2	UTILITY BY OTHERS PLAN SHEETS

UTILITY OWNERS ON PROJECT

(1) TELEPHONE - WINDSTREAM COMMUNICATIONS
(2) POWER - PEE DEE ELECTRIC

SEAL NORTH CAROLINA PROFESSIONAL SEAL 26960 ENGINEER REECE M. SCHULER
2/2/12

V&M
Vaughn & Melton
Consulting Engineers
3089-L Beam Road
Charlotte, NC 28217
704-357-0488

PREPARED IN THE OFFICE OF:
DIVISION OF HIGHWAYS
UTILITIES ENGINEERING SECTION
1591 MAIL SERVICES CENTER
RALEIGH NC 27699-1591
PHONE (919) 250-4128
FAX (919) 250-4119

Roger Worthington, P.E.	UTILITIES SECTION ENGINEER
Xxxxx Xxxxx, P.E.	UTILITIES SQUAD LEADER PROJECT ENGINEER
Reece Schuler, PE	UTILITIES PROJECT DESIGNER

$$$$SYSTIME$$$$
$$$$USERNAME$$$$
09/08/99
BD-5110W_UI_UO1_tab.dgn 2/2/2012 11:32:16 AM

PROJECT REFERENCE NO.	SHEET NO.
BD-5110W	U0-2

UTILITIES BY OTHERS

NOTE:
ALL PROPOSED UTILITY WORK SHOWN ON THIS SHEET WILL BE DONE BY OTHERS

V&M
Vaughn & Melton
Consulting Engineers
Charlotte, North Carolina 704 837-7815
Asheville, North Carolina 828-253-2796
Tri-Cities, Tennessee 423-467-9401
Knoxville, Tennessee 865 546-5800
Middlesboro, Kentucky 606-248-6600
Spartanburg, South Carolina 864-574-4775

Copyright © 2006 Vaughn & Melton, Inc. All Rights Reserved

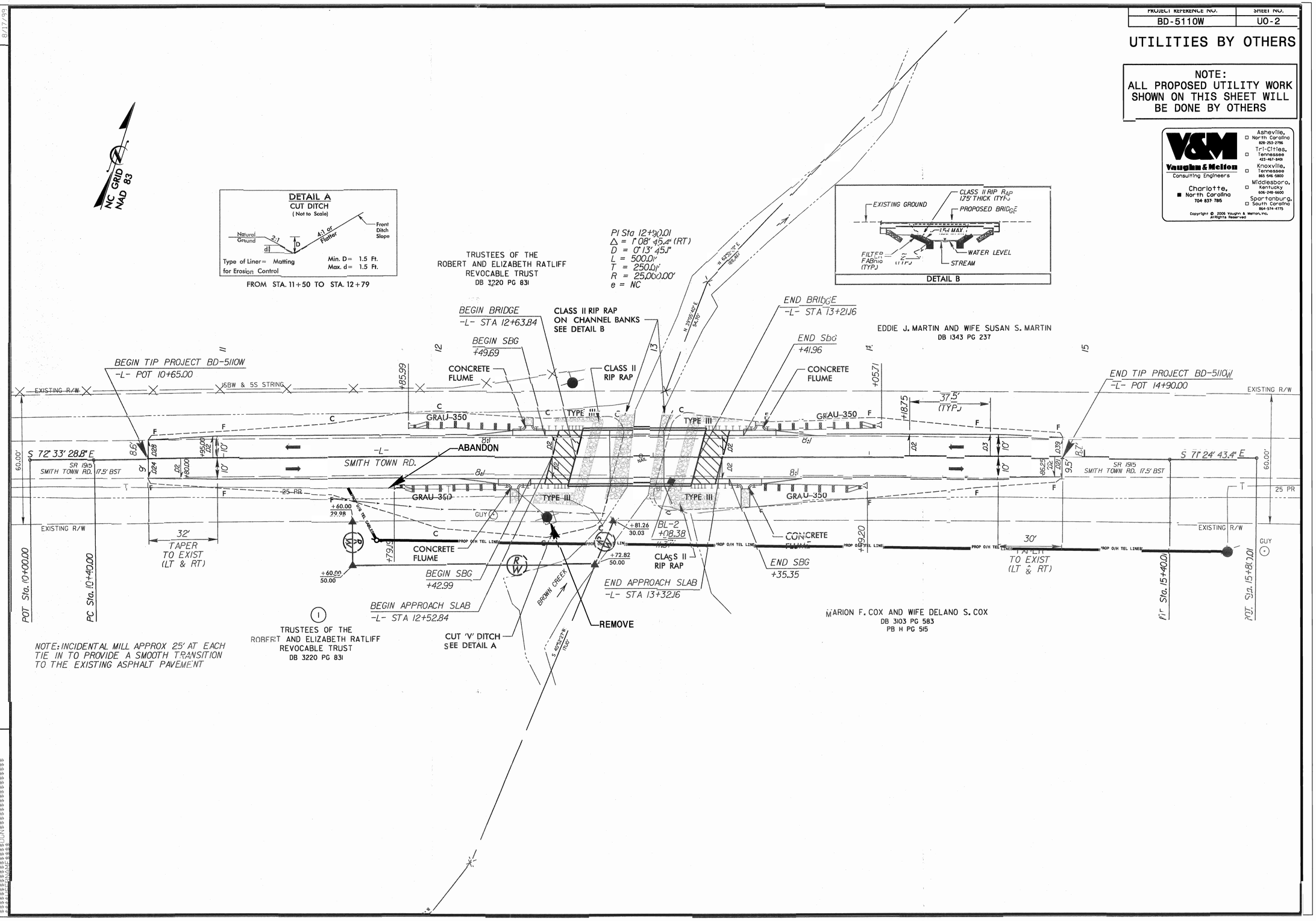

REVISIONS

8/17/99

U0-5110W_DI_U02_pab.dgn 2/2/2012 11:34:42 AM

TIP PROJECT: BD-5110W

STATE	STATE PROJECT REFERENCE NO.	SHEET NO.	TOTAL SHEETS
N.C.	BD-5110W	EC-1	4

STATE PROJ. NO.	F.A. PROJ. NO.	DESCRIPTION
45356.1.23	BRZ-1915(5)	P.E.
45356.2.23	BRZ-1915(5)	R /W & UTILITIES
45356.3.23	BRZ-1915(5)	CONST.

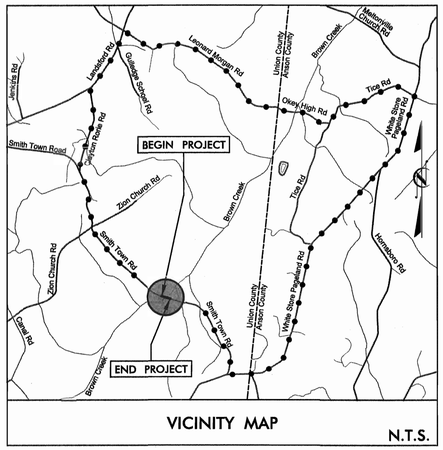

EROSION CONTROL PLANS

STATE OF NORTH CAROLINA
DIVISION OF HIGHWAYS

PLAN FOR PROPOSED
HIGHWAY EROSION CONTROL

UNION COUNTY

LOCATION: BRIDGE #109 OVER BROWN CREEK ON SR 1915 (SMITH TOWN ROAD)

NSRS 2007 - NAD 83

EC-4

BEGIN TIP PROJECT BD-5110W
-L- STA. 10+65.00

END TIP PROJECT BD-5110W
-L- STA. 14+90.00

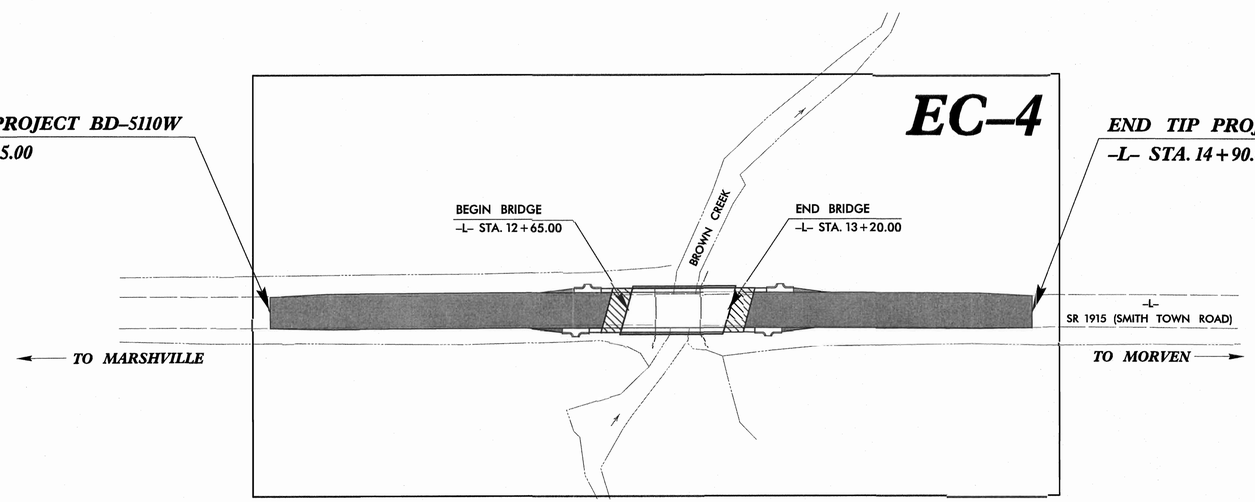

EROSION AND SEDIMENT CONTROL MEASURES

The following roadway english standards as appear in "Roadway Standard Drawings"- Roadway Design Unit - N.C. Department of Transportation - Raleigh, N.C., dated January 2012 and the latest revison thereto are applicable to this project and by reference hereby are considered a part of these plans.

Std. #	Description	Symbol
1605.01	Temporary Silt Fence	
1606.01	Special Sediment Control Fence	
1607.01	Gravel Construction Entrance	
1622.01	Temporary Berms and Slope Drains	
1630.01	Riser Basin	
1630.03	Temporary Silt Ditch	TSD
1630.04	Stilling Basin	
1630.05	Temporary Diversion	TD
1630.06	Special Stilling Basin	
1632.01	Rock Inlet Sediment Trap Type A	A
1632.02	Rock Inlet Sediment Trap Type B	B
1632.03	Rock Inlet Sediment Trap Type C	C
1633.01	Temporary Rock Silt Check Type-A	
1633.02	Temporary Rock Silt Check Type-B	
1634.01	Temporary Rock Sediment Dam Type-A	
1634.02	Temporary Rock Sediment Dam Type-B	
1635.01	Rock Pipe Inlet Sediment Trap Type-A	
1635.02	Rock Pipe Inlet Sediment Trap Type-B	
SP	Silt Basin Type B	
SP	Skimmer Basin	
SP	Tiered Skimmer Basin	
SP	Infiltration Basin	
SP	Wattle	
SP	Coir Fiber Matting	

ENVIRONMENTALLY SENSITIVE AREA(S) EXIST ON THIS PROJECT

Refer To E. C. Special Provisions for Special Considerations.

CLEARING ON THIS PROJECT SHALL BE PERFORMED TO THE LIMITS ESTABLISHED BY METHOD II.

CONTRACT:

GRAPHIC SCALE

20 10 0 20 40

PLANS

ROADSIDE ENVIRONMENTAL UNIT
DIVISION OF HIGHWAYS
STATE OF NORTH CAROLINA

Level III Designer
Davin Morrison, PE #3126

NORTH CAROLINA PROFESSIONAL SEAL 038093 ENGINEER DAVIN G. MORRISON

3/5/12

Prepared In the Office of:

STV/RALPH WHITEHEAD ASSOCIATES, INC.
1000 West Morehead St., Ste. 200, Charlotte NC, 28208
NC License Number F-0991
FOR NORTH CAROLINA DEPARTMENT OF TRANSPORTATION

2012 STANDARD SPECIFICATIONS

EROSION CONTROL PLANS
3/5/2012

PROJECT REFERENCE NO.	SHEET NO.
BD-5110W	EC-2
R/W SHEET NO.	

STV / Ralph Whitehead Associates, Inc.
1000 West Morehead St. Ste. 200
Charlotte, NC 28208
NC License Number F-0991

HYDRAULICS ENGINEER

NORTH CAROLINA PROFESSIONAL SEAL 038053 ENGINEER JUSTIN C. MORRISON
3/5/12

WATTLE WITH POLYACRYLAMIDE DETAIL

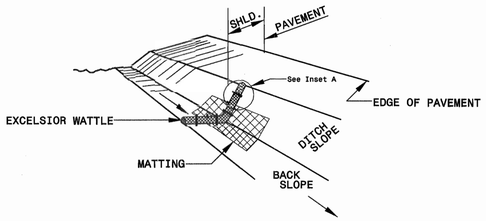

ISOMETRIC VIEW

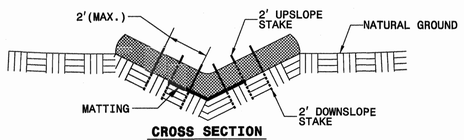

CROSS SECTION VEE DITCH

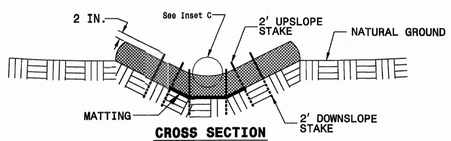

CROSS SECTION TRAPEZOIDAL DITCH

NOTES:

USE MINIMUM 12 IN. DIAMETER EXCELSIOR WATTLE.

USE 2 FT. WOODEN STAKES WITH A 2 IN. BY 2 IN. CROSS SECTION.

ONLY INSTALL WATTLE(S) TO A HEIGHT IN DITCH SO FLOW WILL NOT WASH AROUND WATTLE AND SCOUR DITCH SLOPES AND AS DIRECTED.

INSTALL A MINIMUM OF 2 UPSLOPE STAKES AND 4 DOWNSLOPE STAKES AT AN ANGLE TO WEDGE WATTLE TO BOTTOM OF DITCH.

PROVIDE STAPLES MADE OF 0.125 IN. DIAMETER STEEL WIRE FORMED INTO A U SHAPE NOT LESS THAN 12" IN LENGTH.

INSTALL STAPLES APPROXIMATELY EVERY 1 LINEAR FOOT ON BOTH SIDES OF WATTLE AND AT EACH END TO SECURE IT TO THE SOIL.

INSTALL MATTING IN ACCORDANCE WITH SECTION 1631 OF THE STANDARD SPECIFICATIONS.

PRIOR TO POLYACRYLAMIDE (PAM) APPLICATION, OBTAIN A SOIL SAMPLE FROM PROJECT LOCATION, AND FROM OFFSITE MATERIAL, AND ANALYZE FOR APPROPRIATE PAM FLOCCULANT TO BE APPLIED TO EACH WATTLE.

INITIALLY APPLY 3.5 OUNCES OF ANIONIC OR NEUTRALLY CHARGED POLYACRYLAMIDE (PAM) OVER WATTLE WHERE WATER WILL FLOW AND AFTER EVERY RAINFALL EVENT THAT IS EQUAL TO OR EXCEEDS 0.50 IN.

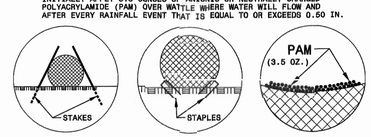

INSET A INSET B INSET C

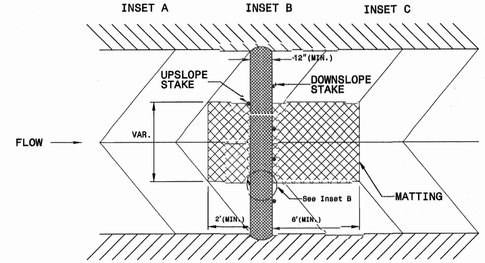

TOP VIEW

WATTLE DETAIL

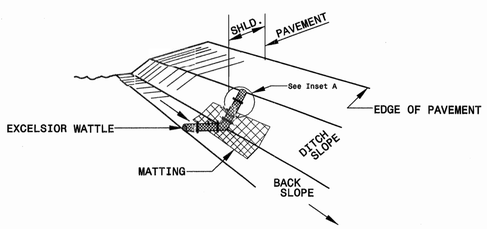

ISOMETRIC VIEW

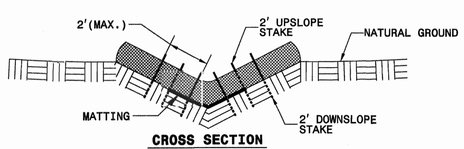

CROSS SECTION VEE DITCH

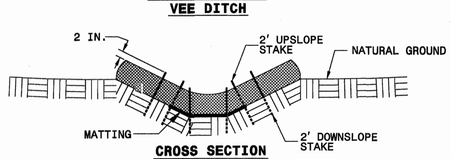

CROSS SECTION TRAPEZOIDAL DITCH

NOTES:

USE MINIMUM 12 IN. DIAMETER EXCELSIOR WATTLE.

USE 2 FT. WOODEN STAKES WITH A 2 IN. BY 2 IN. CROSS SECTION.

ONLY INSTALL WATTLE(S) TO A HEIGHT IN DITCH SO FLOW WILL NOT WASH AROUND WATTLE AND SCOUR DITCH SLOPES AND AS DIRECTED.

INSTALL A MINIMUM OF 2 UPSLOPE STAKES AND 4 DOWNSLOPE STAKES AT AN ANGLE TO WEDGE WATTLE TO BOTTOM OF DITCH.

PROVIDE STAPLES MADE OF 0.125 IN. DIAMETER STEEL WIRE FORMED INTO A U SHAPE NOT LESS THAN 12" IN LENGTH.

INSTALL STAPLES APPROXIMATELY EVERY 1 LINEAR FOOT ON BOTH SIDES OF WATTLE AND AT EACH END TO SECURE IT TO THE SOIL.

INSTALL MATTING IN ACCORDANCE WITH SECTION 1631 OF THE STANDARD SPECIFICATIONS.

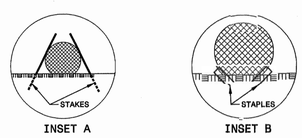

INSET A INSET B

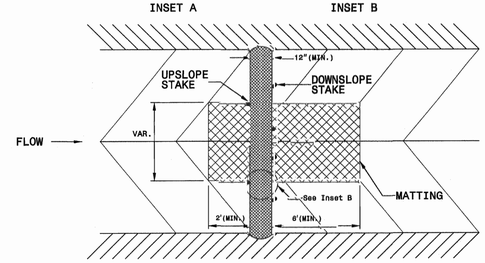

TOP VIEW

MATTING INSTALLATION DETAIL

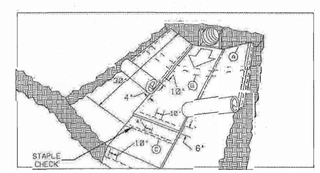

MATTING IN DITCHES

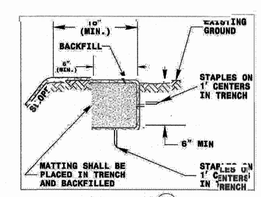

DIAGRAM (A)

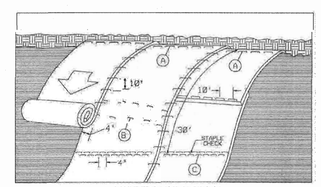

MATTING ON SLOPES

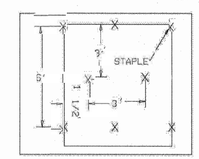

DIAGRAM (B)

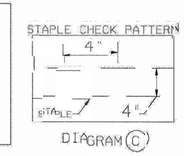

DIAGRAM (C)

NOTES:

THIS DETAIL APPLIES TO STRAW, EXCELSIOR, AND PERMANENT SOIL REINFORCEMENT MAT (PSRM) INSTALLATION.

STAPLES SHALL BE NO. 11 GAUGE STEEL WIRE FORMED INTO A "U" SHAPE WITH A MINIMUM THROAT WIDTH OF 1 INCH AND NOT LESS THAN 6 INCHES IN LENGTH.

r:\roadway\pro\ECVB051ON_rdy_EC02.dgn

3/5/2012

PROJECT REFERENCE NO.	SHEET NO.
BD-5110W	EC-3
RW SHEET NO.	

STV / Ralph Whitehead Associates, Inc.
1000 West Morehead St., Ste. 200
Charlotte, NC 28208
NC License Number F-0991

HYDRAULICS ENGINEER

NORTH CAROLINA PROFESSIONAL SEAL 038053 ENGINEER RALPH C. MORRISON
3/5/12

DIVISION OF HIGHWAYS
STATE OF NORTH CAROLINA

SOIL STABILIZATION SUMMARY SHEET

MATTING FOR EROSION CONTROL (FOR SLOPE STABILIZATION)

CONST SHEET NO.	LINE	FROM STATION	TO STATION	SIDE	ESTIMATE (SY)
			SUBTOTAL		535
MISCELLANEOUS MATTING TO BE INSTALLED AS DIRECTED BY THE ENGINEER					55
				TOTAL	590
				SAY	590

COIR FIBER MATTING (FOR FLOODPLAIN BENCH)

CONST SHEET NO.	LINE	FROM STATION	TO STATION	SIDE	ESTIMATE (SY)
			SUBTOTAL		75
MISCELLANEOUS MATTING TO BE INSTALLED AS DIRECTED BY THE ENGINEER					10
				TOTAL	85
				SAY	85

MATTING FOR EROSION CONTROL (FOR DITCH STABILIZATION)

CONST SHEET NO.	LINE	FROM STATION	TO STATION	SIDE	ESTIMATE (SY)
4	V-DITCH	11+50	12+79	RT	140
			SUBTOTAL		140
MISCELLANEOUS MATTING TO BE INSTALLED AS DIRECTED BY THE ENGINEER					15
				TOTAL	155
				SAY	155

PROJECT REFERENCE NO.	SHEET NO.
BD-5110W	EC-4
RW SHEET NO.	

STV / Ralph Whitehead Associates, Inc.
1000 West Morehead St., Ste. 200
Charlotte, NC 28208
NC License Number F-0991

HYDRAULICS ENGINEER

SEAL 038027 NORTH CAROLINA PROFESSIONAL ENGINEER JOHN C. MORRISON
3/5/12

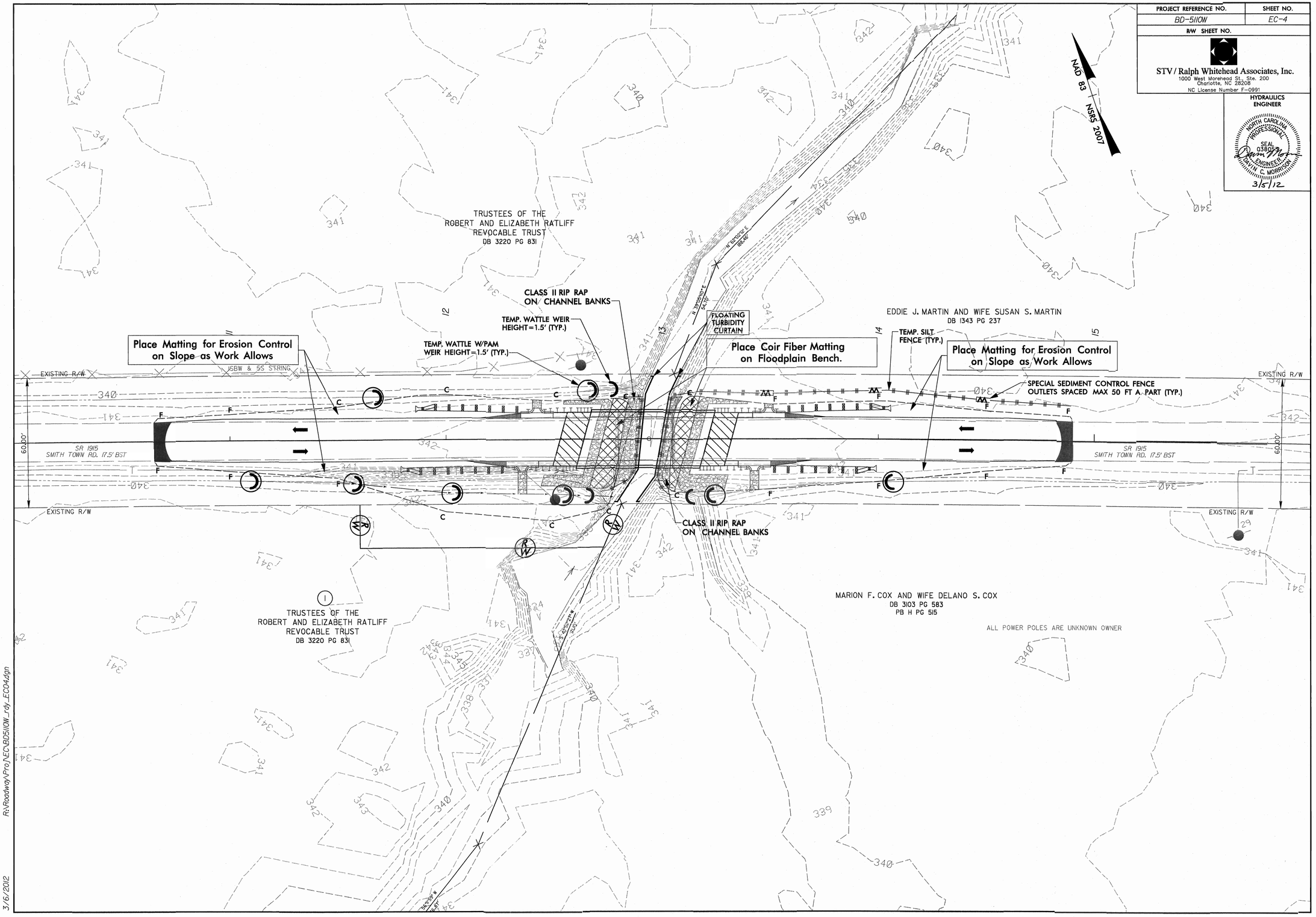

R:\Roadway\Proj\EC\BD5110W_rdy_EC04.dgn

3/6/2012

8/23/99

0 2.5 5	PROJ. REFERENCE NO.	SHEET NO.
	BD-5110W	X-1

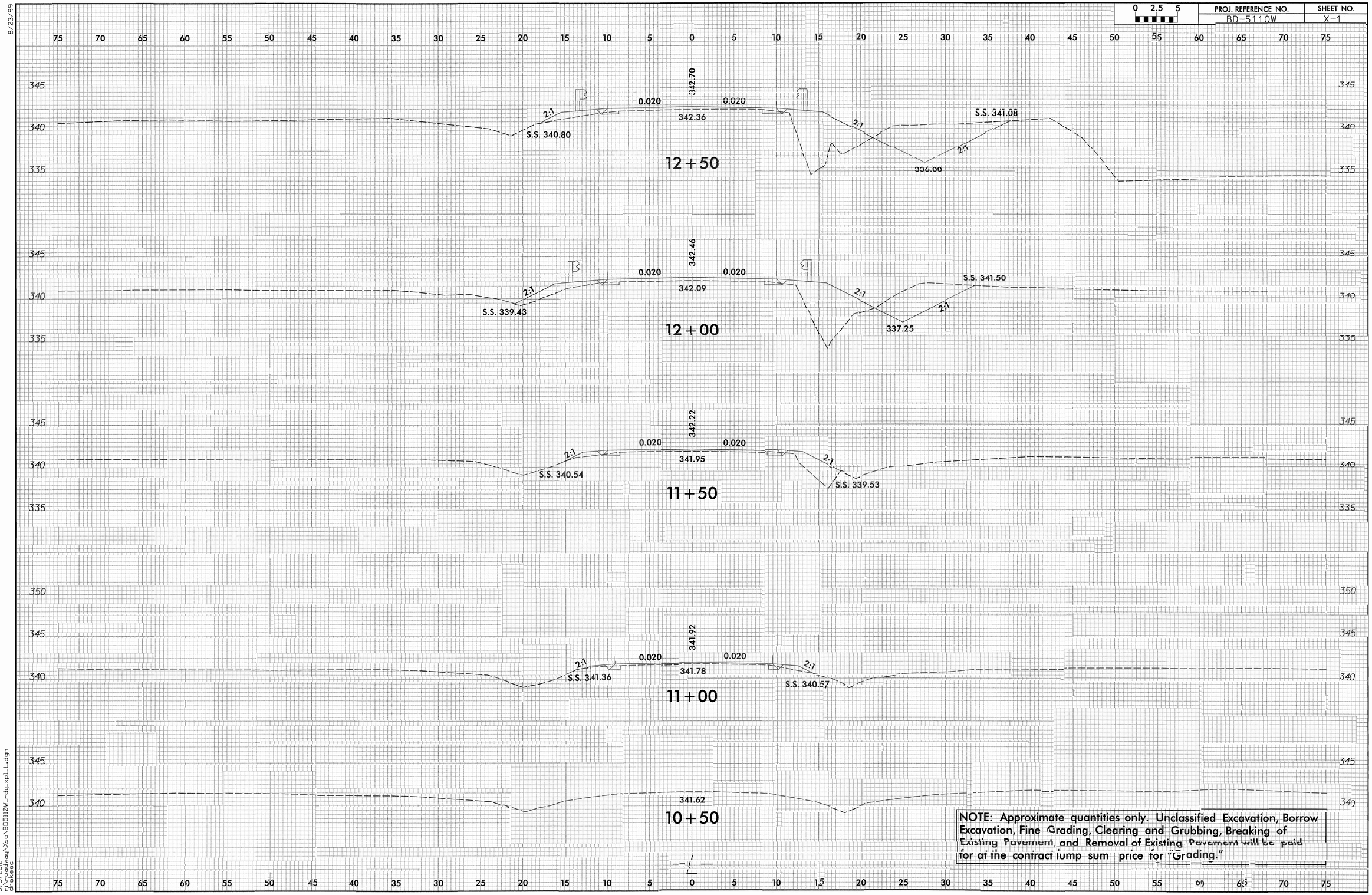

NOTE: Approximate quantities only. Unclassified Excavation, Borrow Excavation, Fine Grading, Clearing and Grubbing, Breaking of Existing Pavement, and Removal of Existing Pavement will be paid for at the contract lump sum price for "Grading."

3/5/2012
r:\roadway\xso\BD5110W_rdy_xpl_1.dgn
drakeac

8/23/99

0 2.5 5	PROJ. REFERENCE NO.	SHEET NO.
	BD-5110W	X-2

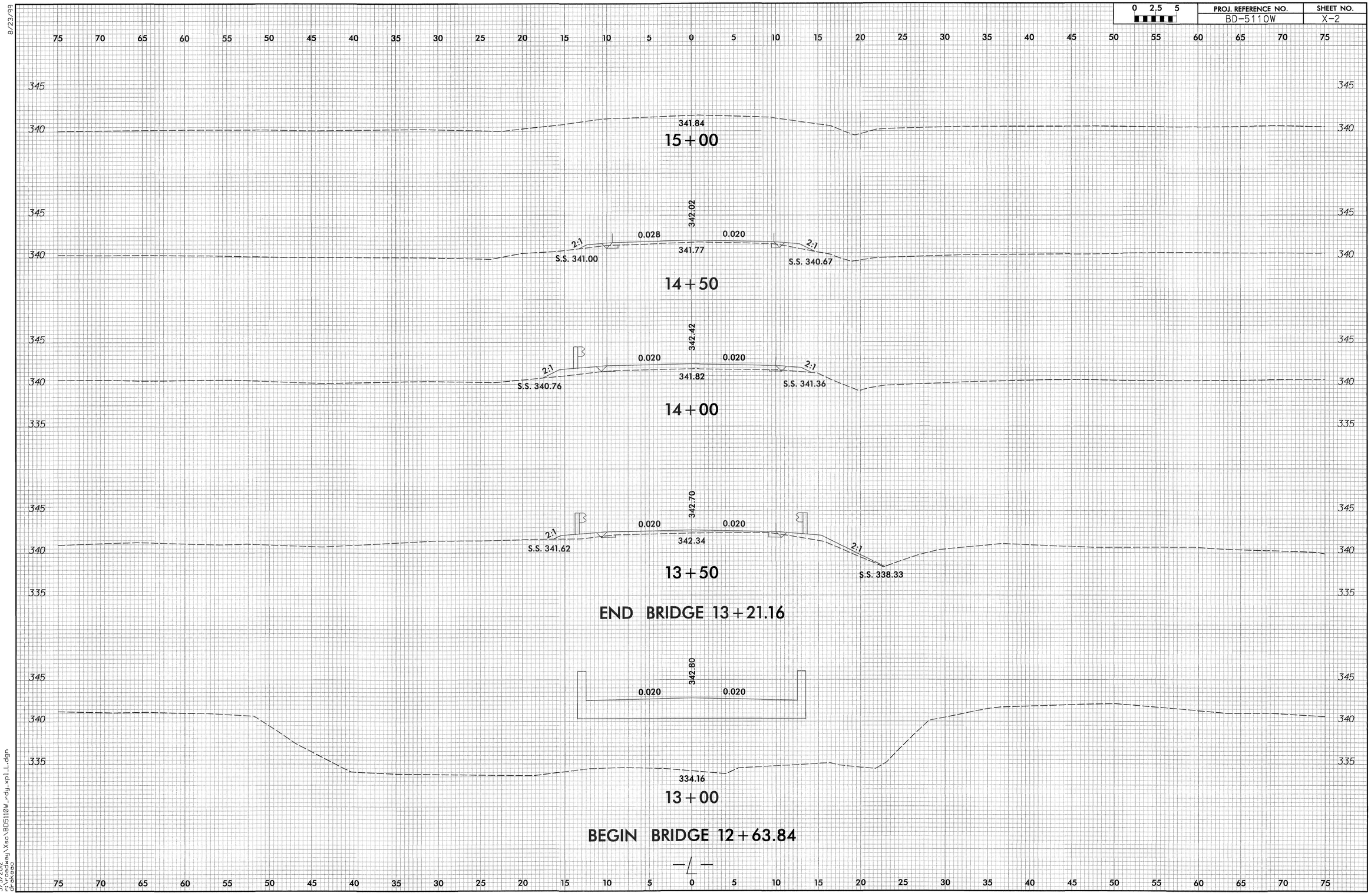

3/5/2012
r:\roadway\Xsc\BD5110W_rdy_xpl_L.dgn
drakeac

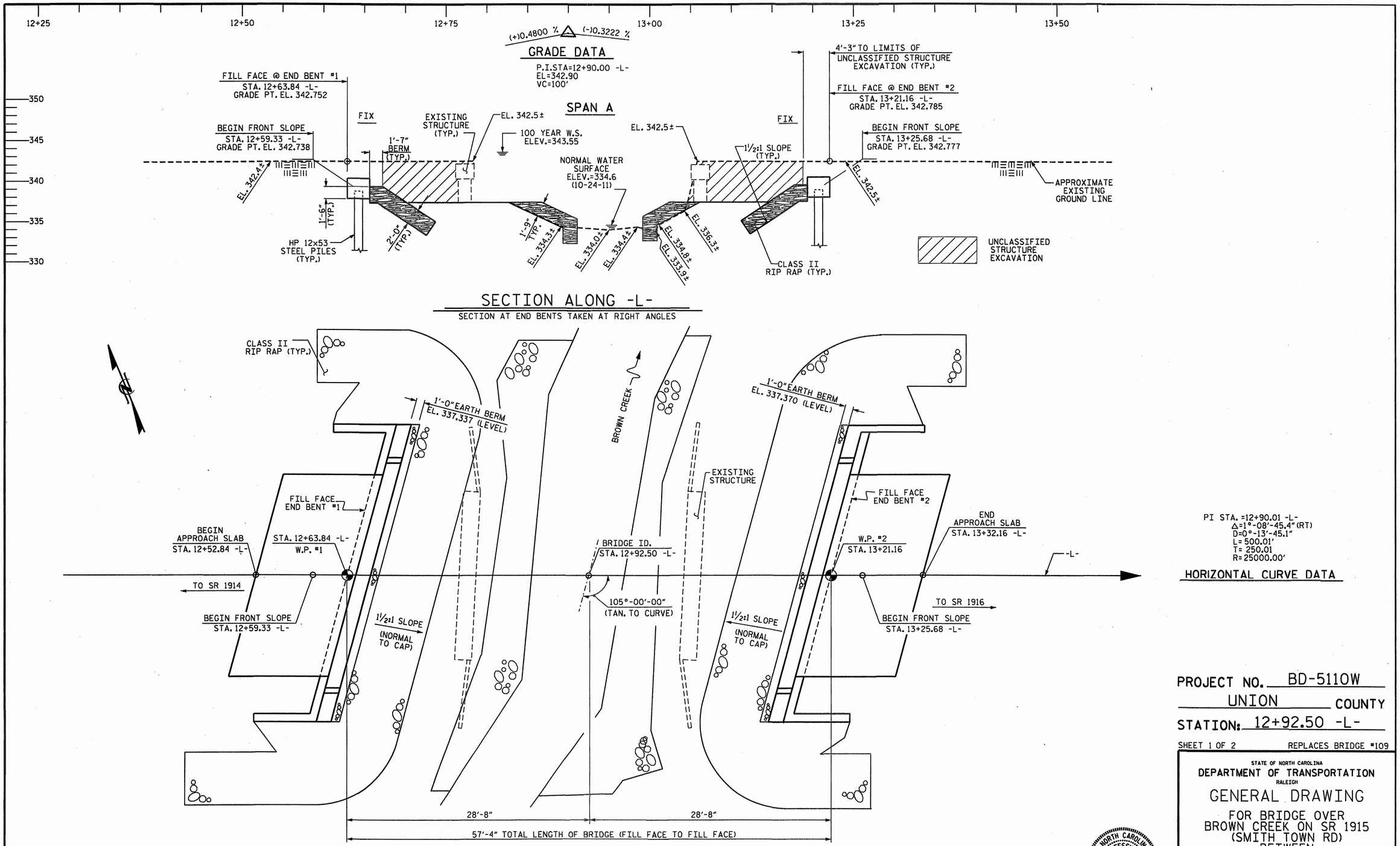

PI STA. =12+90.01 -L-
Δ=1°-08'-45.4" (RT)
D=0°-13'-45.1"
L=500.01'
T=250.01
R=25000.00'

HORIZONTAL CURVE DATA

PROJECT NO. BD-5110W
UNION COUNTY
STATION: 12+92.50 -L-

SHEET 1 OF 2 REPLACES BRIDGE #109

STATE OF NORTH CAROLINA
DEPARTMENT OF TRANSPORTATION
RALEIGH

GENERAL DRAWING
FOR BRIDGE OVER
BROWN CREEK ON SR 1915
(SMITH TOWN RD)
BETWEEN
SR 1914 AND SR 1228

NORTH CAROLINA PROFESSIONAL SEAL 20125 ENGINEER MARSHALL G. CHEEK, JR.
11-22-11

REVISIONS						SHEET NO.
NO.	BY:	DATE:	NO.	BY:	DATE:	S-1
1			3			TOTAL SHEETS
2			4			13

DRAWN BY : R.Z. DEAN DATE : 10/2011
CHECKED BY : M.G.CHEEK DATE : 11/2011

22-NOV-2011 07:44
S:\PDII\sdquady\Low_Impact_Bridges\BD-5110W\Final Plans\BD-5110W_SD_GD.DGN
dahodge

STRUCTURE NOTES

FOR PILES, SEE SECTION 450 OF THE STANDARD SPECIFICATIONS.

PILES AT END BENT NO. 1 & END BENT NO. 2 ARE DESIGNED FOR A FACTORED RESISTANCE OF 85 TONS PER PILE.

DRIVE PILES AT END BENT NO. 1 & END BENT NO. 2 TO A REQUIRED RESISTANCE OF 142 TONS PER PILE.

STEEL H-PILES POINTS ARE REQUIRED FOR STEEL H-PILES AT END BENT NO. 1 AND END BENT NO. 2. FOR STEEL PILE POINTS, SEE SECTION 450 OF THE STANDARD SPECIFICATIONS.

THIS BRIDGE HAS BEEN DESIGNED IN ACCORDANCE WITH HEC 18. "EVALUATING SCOUR AT BRIDGES", MAY, 2001.

NO WAITING PERIOD IS REQUIRED FOR END BENT CONSTRUCTION AFTER COMPLETION OF EMBANKMENT.

REMOVAL OF THE EXISTING BRIDGE SHALL BE PERFORMED SO AS NOT TO ALLOW DEBRIS TO FALL INTO THE WATER AND IN ACCORDANCE WITH ARTICLE 402-2 OF THE STANDARD SPECIFICATIONS.

THE EXISTING BRIDGE CONSISTING OF 1 SPAN (25'-6") WITH AN 5" ASPHALT WEARING SURFACE ON A TIMBER DECK AND STEEL I-BEAMS SUPPORTED BY A SUBSTRUCTURE OF TIMBER CAPS, POST & SILLS, AND TIMBER BUCKHEADS SHALL BE REMOVED.

THE SUBSTRUCTURE OF THE EXISTING BRIDGE INDICATED ON THE PLANS IS FROM THE BEST INFORMATION AVAILABLE. SINCE THIS INFORMATION IS SHOWN FOR THE CONVENIENCE OF THE CONTRACTOR, THE CONTRACTOR SHALL HAVE NO CLAIM WHATSOEVER AGAINST THE DEPARTMENT OF TRANSPORTATION FOR ANY DELAYS OR ADDITIONAL COST INCURRED BASED ON DIFFERENCES BETWEEN THE EXISTING BRIDGE SUBSTRUCTURE SHOWN ON THE PLANS AND THE ACTUAL CONDITIONS AT THE PROJECT SITE.

ASSUMED LIVE LOAD = HL-93 OR ALTERNATE LOADING.

FOR OTHER DESIGN DATA AND GENERAL NOTES, SEE SHEET SN.

FOR EROSION CONTROL MEASURES, SEE EROSION CONTROL PLANS.

THIS BRIDGE HAS BEEN DESIGNED IN ACCORDANCE WITH THE AASHTO LFRD BRIDGE DESIGN SPECIFICATIONS.

FOR SUBMITTAL OF WORKING DRAWINGS, SEE SPECIAL PROVISIONS.

FOR CRANE SAFETY, SEE SPECIAL PROVISIONS.

FOR GROUT FOR STRUCTURES, SEE SPECIAL PROVISIONS.

FOR FALSEWORK AND FORMWORK, SEE SPECIAL PROVISIONS.

THE MATERIAL SHOWN IN THE CROSS-HATCHED AREA ON SHEET S-1 SHALL BE EXCAVATED FOR A DISTANCE OF 25 FT. EACH SIDE OF CENTERLINE ROADWAY AS DIRECTED BY THE ENGINEER. THIS WORK WILL BE PAID FOR AT THE CONTRACT LUMP SUM PRICE FOR UNCLASSIFIED STRUCTURE EXCAVATION. SEE SECTION 412 OF THE STANDARD SPECIFICATIONS.

INASMUCH AS THE PAINT SYSTEM ON THE EXISTING STRUCTURAL STEEL CONTAINS LEAD, THE CONTRACTOR'S ATTENTION IS DIRECTED TO ARTICLE 107-1 OF THE STANDARD SPECIFICATIONS. ANY COSTS RESULTING FROM COMPLIANCE WITH APPLICABLE STATE OR FEDERAL REGULATIONS PERTAINING TO HANDLING OF MATERIALS CONTAINING LEAD BASED PAINT SHALL BE INCLUDED IN THE BID PRICE FOR "REMOVAL OF EXISTING STRUCTURE".

HYDRAULIC DATA

DESIGN DISCHARGE	=	3150 c.f.s.
FREQUENCY OF DESIGN FLOOD	=	25 YRS.
DESIGN HIGH WATER ELEVATION	=	343.06
DRAINAGE AREA	=	18.7 SQ. MI.
BASIC DISCHARGE (Q100)	=	4649 c.f.s.
BASIC HIGH WATER ELEVATION	=	343.55

OVERTOPPING FLOOD DATA

OVERTOPPING DISCHARGE	=	2323 c.f.s.
FREQUENCY OF OVERTOPPING FLOOD	=	100+ YRS.
OVERTOPPING FLOOD ELEVATION	=	

STRUCTURE TOTAL BILL OF MATERIAL

	REMOVAL OF EXISTING STRUCTURE	UNCLASSIFIED STRUCTURE EXCAVATION	CLASS A CONCRETE	BRIDGE APPROACH SLABS	REINFORCING STEEL	HP 12X53 STEEL PILES		STEEL PILE POINTS	VERTICAL CONCRETE BARRIER RAIL	RIP RAP CLASS II (2'-0" THICK)	FILTER FABRIC FOR DRAINAGE	ELASTOMERIC BEARINGS	3'-0" X 1'-9" PRESTRESSED CONCRETE CORED SLABS
	LUMP SUM	LUMP SUM	CU. YDS.	LUMP SUM	LBS.	NO.	LIN. FT.	EACH	LIN. FT.	TONS	SQ. YDS.	LUMP SUM	LIN. FT.
SUPERSTRUCTURE	LUMP SUM			LUMP SUM					110.25			LUMP SUM	495.00
END BENT #1		LUMP SUM	12.7		1904	5	50	5		204	242		
END BENT #2		LUMP SUM	12.7		1904	5	100	5		105	117		
TOTAL	LUMP SUM	LUMP SUM	25.4	LUMP SUM	3808	10	150	10	110.25	309	359	LUMP SUM	495.00

PROJECT NO. BD-5110W
UNION COUNTY
STATION: 12+95.50 -L-
SHEET 2 OF 2

STATE OF NORTH CAROLINA
DEPARTMENT OF TRANSPORTATION
RALEIGH

STRUCTURE TOTAL BILL OF MATERIAL AND STRUCTURE NOTES

NORTH CAROLINA PROFESSIONAL SEAL 20125 ENGINEER MARSHALL G. CHEEK, JR.
11-22-11

REVISIONS								SHEET NO.
NO.	BY:	DATE:	NO.	BY:	DATE:			S-2
1			3					TOTAL SHEETS
2			4					13

DRAWN BY : R.Z. DEAN DATE : 10/2011
CHECKED BY : M.G. CHEEK DATE : 11/2011

22-NOV-2011 07:45
S:\PDII\sdquady\Low_Impact_Bridges\BD-5110W\Final Plans\BD-5110W_SD_GD.DGN
dahodge

LOAD AND RESISTANCE FACTOR RATING (LRFD) SUMMARY FOR PRESTRESSED CONCRETE GIRDERS

LEVEL		VEHICLE	WEIGHT (W) (TONS)	CONTROLLING LOAD RATING	MINIMUM RATING FACTORS (RF)	TONS = W X RF	STRENGTH I LIMIT STATE											SERVICE III LIMIT STATE						COMMENT NUMBER
								MOMENT					SHEAR						MOMENT					
							LIVELOAD FACTORS	DISTRIBUTION FACTORS (DF)	RATING FACTOR	SPAN	GIRDER LOCATION	DISTANCE FROM LEFT END OF SPAN (ft)	DISTRIBUTION FACTORS (DF)	RATING FACTOR	SPAN	GIRDER LOCATION	DISTANCE FROM LEFT END OF SPAN (ft)	LIVELOAD FACTORS	DISTRIBUTION FACTORS (DF)	RATING FACTOR	SPAN	GIRDER LOCATION	DISTANCE FROM LEFT END OF SPAN (ft)	
DESIGN LOAD RATING		HL-93(Inv)	N/A	1	1.065	--	1.75	0.27	1.25	55'	EL	26.982	0.616	1.12	55'	EL	5.396	0.80	0.27	1.07	55'	EL	26.982	
		HL-93(Opr)	N/A	--	1.452	--	1.35	0.27	1.61	55'	EL	26.982	0.616	1.45	55'	EL	5.396	N/A	--	--	--	--	--	
		HS-20(Inv)	36.000	2	1.335	48.043	1.75	0.27	1.56	55'	EL	26.982	0.616	1.34	55'	EL	5.396	0.80	0.27	1.33	55'	EL	26.982	
		HS-20(Opr)	36.000	--	1.734	62.425	1.35	0.27	2.02	55'	EL	26.982	0.616	1.73	55'	EL	5.396	N/A	--	--	--	--	--	
LEGAL LOAD RATING	SV	SNSH	13.500	--	2.802	37.83	1.4	0.27	4.09	55'	EL	26.982	0.616	3.81	55'	EL	5.396	0.80	0.27	2.80	55'	EL	26.982	
		SNGARBS2	20.000	--	2.175	43.506	1.4	0.27	3.18	55'	EL	26.982	0.616	2.76	55'	EL	5.396	0.80	0.27	2.18	55'	EL	26.982	
		SNAGRIS2	22.000	--	2.099	46.173	1.4	0.27	3.07	55'	EL	26.982	0.616	2.58	55'	EL	5.396	0.80	0.27	2.10	55'	EL	26.982	
		SNCOTTS3	27.250	--	1.397	38.065	1.4	0.27	2.04	55'	EL	26.982	0.616	1.91	55'	EL	5.396	0.80	0.27	1.40	55'	EL	26.982	
		SNAGGRS4	34.925	--	1.2	41.922	1.4	0.27	1.75	55'	EL	26.982	0.616	1.62	55'	EL	5.396	0.80	0.27	1.20	55'	EL	26.982	
		SNS5A	35.550	--	1.172	41.648	1.4	0.27	1.71	55'	EL	26.982	0.616	1.66	55'	EL	5.396	0.80	0.27	1.17	55'	EL	26.982	
		SNS6A	39.950	--	1.089	43.514	1.4	0.27	1.59	55'	EL	26.982	0.616	1.53	55'	EL	5.396	0.80	0.27	1.09	55'	EL	26.982	
		SNS7B	42.000	--	1.038	43.587	1.4	0.27	1.52	55'	EL	26.982	0.616	1.53	55'	EL	5.396	0.80	0.27	1.04	55'	EL	26.982	
	TTST	TNAGRIT3	33.000	--	1.333	43.973	1.4	0.27	1.95	55'	EL	26.982	0.616	1.81	55'	EL	5.396	0.80	0.27	1.33	55'	EL	26.982	
		TNT4A	33.075	--	1.342	44.4	1.4	0.27	1.96	55'	EL	26.982	0.616	1.75	55'	EL	5.396	0.80	0.27	1.34	55'	EL	26.982	
		TNT6A	41.600	--	1.112	46.252	1.4	0.27	1.62	55'	EL	26.982	0.616	1.67	55'	EL	5.396	0.80	0.27	1.11	55'	EL	26.982	
		TNT7A	42.000	--	1.125	47.255	1.4	0.27	1.64	55'	EL	26.982	0.616	1.56	55'	EL	5.396	0.80	0.27	1.13	55'	EL	26.982	
		TNT7B	42.000	--	1.174	49.318	1.4	0.27	1.72	55'	EL	26.982	0.616	1.47	55'	EL	5.396	0.80	0.27	1.17	55'	EL	26.982	
		TNAGRIT4	43.000	--	1.111	47.786	1.4	0.27	1.62	55'	EL	26.982	0.616	1.42	55'	EL	5.396	0.80	0.27	1.11	55'	EL	26.982	
		TNAGT5A	45.000	--	1.041	46.851	1.4	0.27	1.52	55'	EL	26.982	0.616	1.44	55'	EL	5.396	0.80	0.27	1.04	55'	EL	26.982	
		TNAGT5B	45.000	3	1.023	46.02	1.4	0.27	1.49	55'	EL	26.982	0.616	1.35	55'	EL	5.396	0.80	0.27	1.02	55'	EL	26.982	

LOAD FACTORS:

	LIMIT STATE	γ_{DC}	γ_{DW}
DESIGN LOAD RATING FACTORS	STRENGTH I	1.25	1.50
	SERVICE III	1.00	1.00

NOTES:

MINIMUM RATING FACTORS ARE BASED ON THE STRENGTH I AND SERVICE III LIMIT STATES.

ALLOWABLE STRESSES FOR SERVICE III LIMIT STATE ARE AS REQUIRED FOR DESIGN.

COMMENTS:

1.
2.
3.
4.

(#) CONTROLLING LOAD RATING

- (1) DESIGN LOAD RATING (HL-93)
- (2) DESIGN LOAD RATING (HS-20)
- (3) LEGAL LOAD RATING **
- ** SEE CHART FOR VEHICLE TYPE

GIRDER LOCATION

- I - INTERIOR GIRDER
- EL - EXTERIOR LEFT GIRDER
- ER - EXTERIOR RIGHT GIRDER

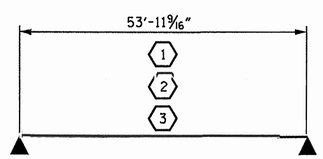

LRFR SUMMARY

FOR SPAN 'A'

NOTE: SPAN DIMENSIONS ARE FROM ℄ BEARING TO ℄ BEARING

PROJECT NO. BD-5110W
UNION COUNTY
STATION: 12+92.50 -L-

STATE OF NORTH CAROLINA
DEPARTMENT OF TRANSPORTATION
RALEIGH

STANDARD
LRFR SUMMARY FOR
55' CORED SLAB UNIT
105° SKEW
(NON-INTERSTATE TRAFFIC)

NORTH CAROLINA PROFESSIONAL SEAL 20125 ENGINEER MARSHALL G. CHEEK, JR.
11-15-11

ASSEMBLED BY :	R.Z.DEAN	DATE :	10/2011
CHECKED BY :	M.G. CHEEK	DATE :	11/2011
DRAWN BY : CVC	6/10		
CHECKED BY : DNS	6/10		

REVISIONS							
NO.	BY:	DATE:	NO.	BY:	DATE:	SHEET NO.	S-3
1			3			TOTAL SHEETS	13
2			4				

15-NOV-2011 09:04
S:\PGII\sdquady\Low_Impact_Bridges\BD-5110W\Final Plans\BD-5110W_SD_LRFR.dgn
dahodge

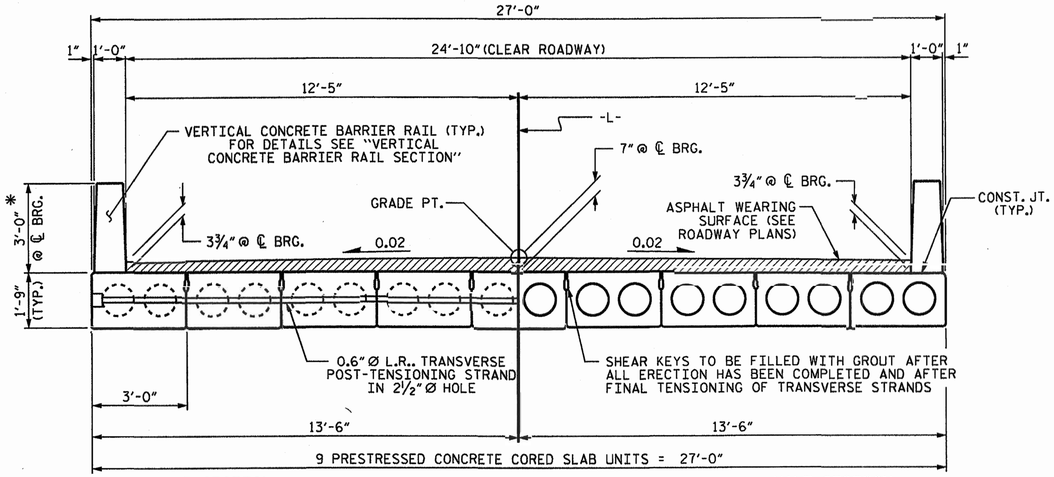

TYPICAL SECTION

* - THE MAXIMUM BARRIER RAIL HEIGHT AND ASPHALT THICKNESS IS SHOWN. THE HEIGHT OF THE BARRIER RAIL AND ASPHALT THICKNESS VARIES WHILE THE TOP OF THE BARRIER RAIL FOLLOWS THE PROFILE OF THE GUTTERLINE. FOR RAIL HEIGHT DETAILS AND ASPHALT THICKNESS SEE "VERTICAL CONCRETE BARRIER RAIL SECTION" DETAIL, SHEET 3 OF 3.

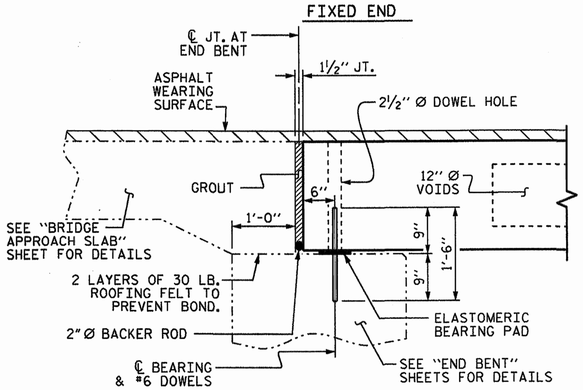

SECTION AT END BENT

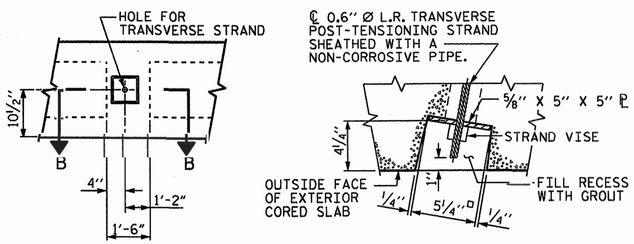

ELEVATION VIEW

SECTION B-B

GROUTED RECESS AT END OF POST-TENSIONED STRAND OF CORED SLABS

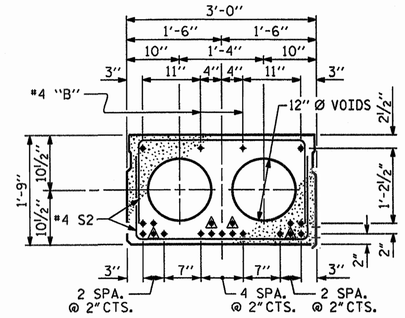

STRAND LAYOUT FOR 50' & 55' UNIT

(19 STRANDS REQUIRED)

INTERIOR SLAB SECTION
0.6" Ø LOW RELAXATION

▲ BOND SHALL BE BROKEN ON THESE STRANDS FOR A DISTANCE OF 6'-0" FROM END OF CORED SLAB UNIT. SEE STANDARD SPECIFICATIONS, ARTICLE 1078-7.

■ BOND SHALL BE BROKEN ON THESE STRANDS FOR A DISTANCE OF 2'-0" FROM END OF CORED SLAB UNIT. SEE STANDARD SPECIFICATIONS, ARTICLE 1078-7.

● OPTIONAL FULL LENGTH DEBONDED STRANDS. THESE STRANDS ARE NOT REQUIRED. IF THE FABRICATOR CHOOSES TO INCLUDE THESE STRANDS IN THE CORED SLAB UNIT, THE STRANDS SHALL BE DEBONDED FOR THE FULL LENGTH OF THE UNIT AT NO ADDITIONAL COST. SEE STANDARD SPECIFICATIONS, ARTICLE 1078-7.

DEBONDING LEGEND

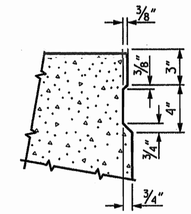

SHEAR KEY DETAIL

NOTE: OMIT SHEAR KEY ON OUTSIDE FACE OF EXTERIOR CORED SLABS.

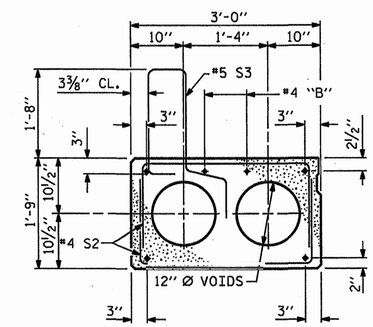

EXTERIOR SLAB SECTION

(FOR PRESTRESSED STRAND LAYOUT, SEE "INTERIOR SLAB SECTION".)

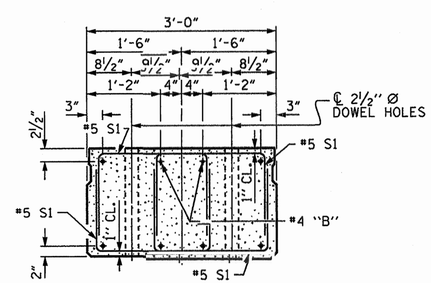

END ELEVATION

SHOWING PLACEMENT OF DOUBLE STIRRUPS AND LOCATION OF DOWEL HOLES. (STRAND LAYOUT NOT SHOWN.) INTERIOR SLAB UNIT SHOWN-EXTERIOR SLAB UNIT SIMILAR EXCEPT SHEAR KEY LOCATION.

PROJECT NO. BD-5110W
UNION COUNTY
STATION: 12+92.50 -L-

SHEET 1 OF 3

STATE OF NORTH CAROLINA
DEPARTMENT OF TRANSPORTATION
RALEIGH

STANDARD
3'-0" X 1'-9"
PRESTRESSED CONCRETE
CORED SLAB UNIT
105° SKEW

NORTH CAROLINA PROFESSIONAL SEAL 20125 ENGINEER
11-15-11

REVISIONS						SHEET NO.
NO.	BY:	DATE:	NO.	BY:	DATE:	S-4
1			3			TOTAL SHEETS
2			4			13

ASSEMBLED BY : R.Z.DEAN	DATE : 10/2011	
CHECKED BY : M.G. CHEEK	DATE : 11/2011	
DRAWN BY : DGE	5/09	
CHECKED BY: BCH	6/09	

15-NOV-2011 08:20
S:\PGII\adquady\Low_Impact_Bridges\BD-5110W\Final Plans\BD-5110W_SD_CS.dgn
dahodge

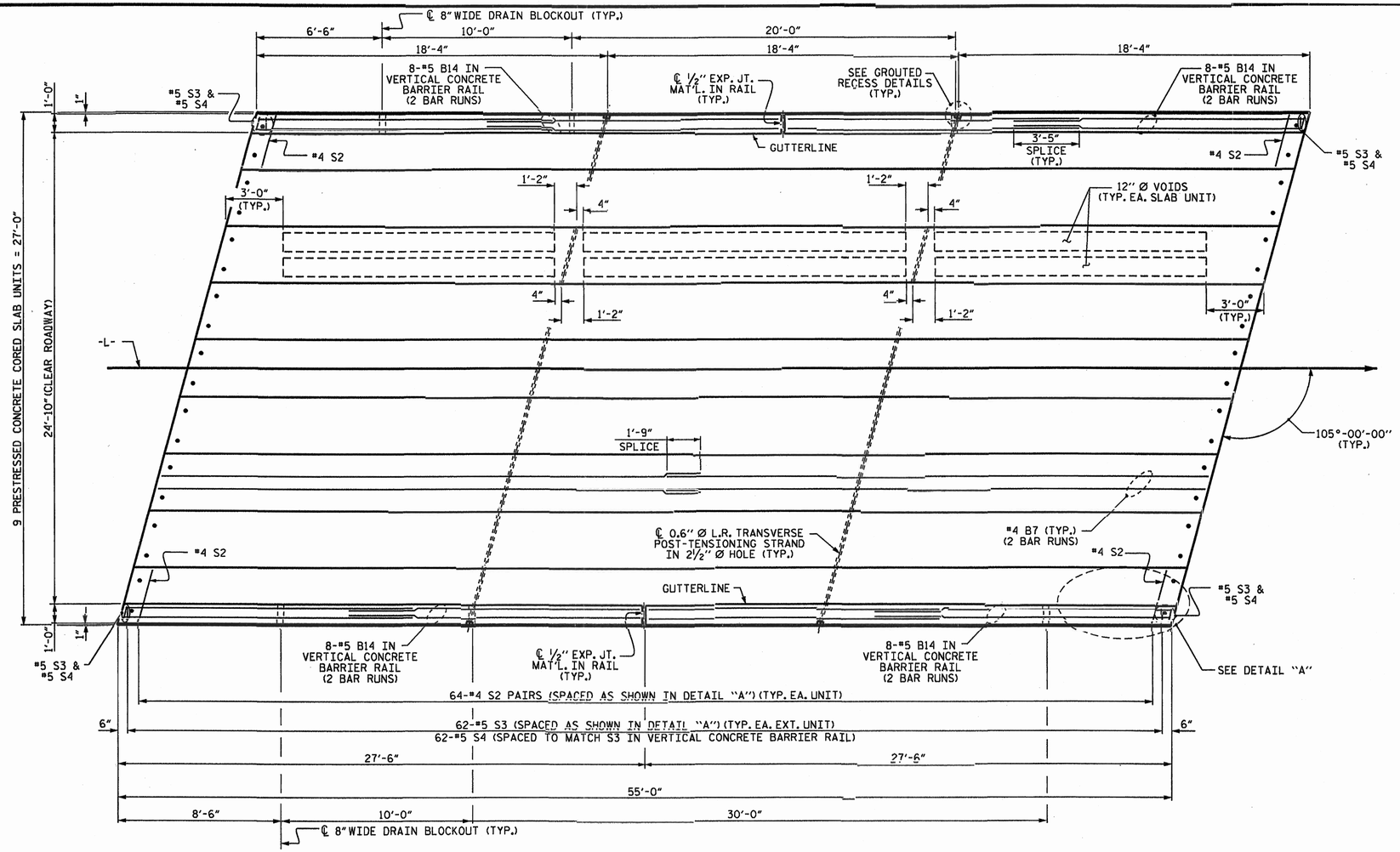

PLAN OF UNIT

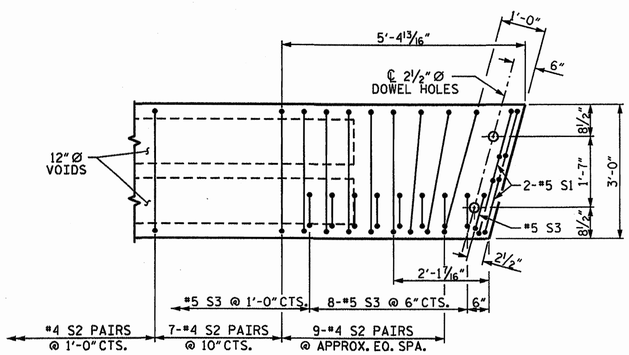

DETAIL "A"

NOTE: EXTERIOR UNIT SHOWN - INTERIOR UNIT SIMILAR EXCEPT OMIT #5 S3 BARS.

PROJECT NO. BD-5110W
UNION COUNTY
STATION: 12+92.50 -L-

SHEET 2 OF 3

STATE OF NORTH CAROLINA
DEPARTMENT OF TRANSPORTATION
RALEIGH

PLAN OF 55' UNIT
24'-10" CLEAR ROADWAY
105° SKEW

NORTH CAROLINA PROFESSIONAL SEAL 20125 ENGINEER MARSHALL G. CHEEK, JR.
11-15-11

ASSEMBLED BY :	R.Z. DEAN	DATE :	10/2011
CHECKED BY :	M.G. CHEEK	DATE :	11/2011
DRAWN BY :	DGE	5/09	
CHECKED BY:	BCH	6/09	

REVISIONS							SHEET NO.
NO.	BY:	DATE:	NO.	BY:	DATE:		S-5
1			3				TOTAL SHEETS
2			4				13

15-NOV-2011 09:07
S:\PGII\sdquady\Low_Impact_Bridges\BD-5110W\Final Plans\BD-5110W_SD_CS.dgn
dphodge

GRADE 270 STRANDS	
	0.6"Ø L.R.
AREA (SQUARE INCHES)	0.217
ULTIMATE STRENGTH (LBS. PER STRAND)	58,600
APPLIED PRESTRESS (LBS. PER STRAND)	43,950

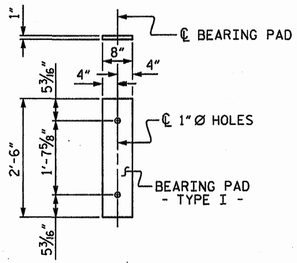

FIXED END
(TYPE I - 18 REQ'D)

ELASTOMERIC BEARING DETAILS

ELASTOMER IN ALL BEARINGS SHALL BE 50 DUROMETER HARDNESS.

BILL OF MATERIAL FOR ONE 55' CORED SLAB UNIT

				EXTERIOR UNIT		INTERIOR UNIT	
BAR	NUMBER	SIZE	TYPE	LENGTH	WEIGHT	LENGTH	WEIGHT
B7	4	#4	STR	28'-3"	75	28'-3"	75
S1	8	#5	3	4'-3"	35	4'-3"	35
S2	128	#4	3	5'-4"	456	5'-4"	456
* S3	64	#5	1	6'-2"	412		
REINFORCING STEEL			LBS.		566		566
* EPOXY COATED REINFORCING STEEL			LBS.		412		
6500 P.S.I. CONCRETE			CU. YDS.		7.9		7.9
0.6"Ø L.R. STRANDS			No.		19		19

DEAD LOAD DEFLECTION AND CAMBER	
	3'-0" x 1'-9"
55' CORED SLAB UNIT	0.6"Ø L.R. STRAND
CAMBER (SLAB ALONE IN PLACE)	2 1/2" ↑
DEFLECTION DUE TO SUPERIMPOSED DEAD LOAD**	1/4" ↓
FINAL CAMBER	2 1/4" ↑

** INCLUDES FUTURE WEARING SURFACE

CONCRETE RELEASE STRENGTH	
UNIT	PSI
55' UNITS	4900

CORED SLABS REQUIRED			
	NUMBER	LENGTH	TOTAL LENGTH
55' UNIT			
EXTERIOR C.S.	2	55'-0"	110'-0"
INTERIOR C.S.	7	55'-0"	385'-0"
TOTAL	9		495'-0"

BAR TYPES

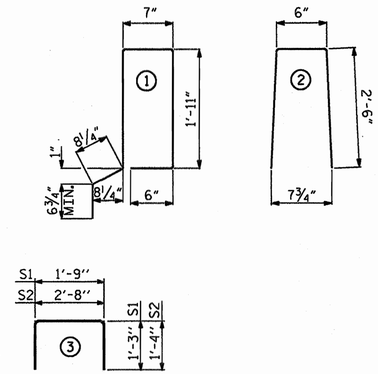

ALL BAR DIMENSIONS ARE OUT TO OUT

NOTES

ALL PRESTRESSING STRANDS SHALL BE 7-WIRE LOW RELAXATION GRADE 270 STRANDS AND SHALL CONFORM TO AASHTO M203 EXCEPT FOR SAMPLING REQUIREMENTS WHICH SHALL BE IN ACCORDANCE WITH THE STANDARD SPECIFICATIONS.

ALL REINFORCING STEEL CAST WITH THE CORED SLAB SECTIONS SHALL BE GRADE 60 AND SHALL BE INCLUDED IN THE UNIT PRICE BID FOR PRESTRESSED CONCRETE CORED SLABS.

RECESSES FOR TRANSVERSE STRANDS SHALL BE GROUTED AFTER THE TENSIONING OF THE STRANDS.

THE 2 1/2"Ø DOWEL HOLES AT FIXED ENDS OF SLAB SECTIONS SHALL BE FILLED WITH NON-SHRINK GROUT.

THE 2"Ø BACKER ROD SHALL CONFORM TO THE REQUIREMENTS OF TYPE M BOND BREAKER. SEE SECTION 1028 OF THE STANDARD SPECIFICATIONS.

WHEN CORED SLABS ARE CAST, AN INTERNAL HOLD-DOWN SYSTEM SHALL BE EMPLOYED TO PREVENT VOIDS FROM RISING OR MOVING SIDEWAYS. AT LEAST SIX WEEKS PRIOR TO CASTING CORED SLABS, THE CONTRACTOR SHALL SUBMIT TO THE ENGINEER FOR REVIEW AND COMMENT, DETAILED DRAWINGS OF THE PROPOSED HOLD-DOWN SYSTEM. IN ADDITION TO STRUCTURAL DETAILS, LOCATION AND SPACING OF THE HOLD-DOWNS SHALL BE INDICATED.

ALL REINFORCING STEEL IN THE VERTICAL CONCRETE BARRIER RAIL SHALL BE EPOXY COATED.

PRESTRESSING STRANDS SHALL BE CUT FLUSH WITH THE CORED SLAB UNIT ENDS.

APPLY EPOXY PROTECTIVE COATING TO CORED SLAB UNIT ENDS.

GROOVED CONTRACTION JOINTS, 1/2" IN DEPTH, SHALL BE TOOLED IN ALL EXPOSED FACES OF THE BARRIER RAIL AND IN ACCORDANCE WITH ARTICLE 825-10(B) OF THE STANDARD SPECIFICATIONS. A CONTRACTION JOINT SHALL BE LOCATED AT EACH THIRD POINT BETWEEN BARRIER RAIL EXPANSION JOINTS. ONLY ONE CONTRACTION JOINT IS REQUIRED AT MIDPOINT OF BARRIER RAIL SEGMENTS LESS THAN 20 FEET IN LENGTH AND NO CONTRACTION JOINTS ARE REQUIRED FOR THOSE SEGMENTS LESS THAN 10 FEET IN LENGTH.

TRANSVERSE POST TENSIONING OF THE CORED SLAB UNITS SHALL BE DONE IN ACCORDANCE WITH THE STANDARD SPECIFICATIONS.

THE TRANSFER OF LOAD FROM THE ANCHORAGES TO THE CORED SLAB UNIT SHALL BE DONE WHEN THE CONCRETE HAS REACHED A COMPRESSIVE STRENGTH OF NOT LESS THAN THE REQUIRED STRENGTH SHOWN IN THE "CONCRETE RELEASE STRENGTH" TABLE.

FOR GROUT FOR STRUCTURES, SEE SPECIAL PROVISIONS.

BILL OF MATERIAL FOR VERTICAL CONCRETE BARRIER RAIL

BAR	BARS PER PAIR OF EXTERIOR UNITS	TOTAL NO.	SIZE	TYPE	LENGTH	WEIGHT
	55' UNIT					
* B14	64		#5	STR	15'-5"	1029
* S4	128		#5	2	5'-6"	734
* EPOXY COATED REINFORCING STEEL				LBS.		1763
CLASS AA CONCRETE				CU.YDS.		11.3
TOTAL VERTICAL CONCRETE BARRIER RAIL				LN. FT.		110.25

GUTTERLINE ASPHALT THICKNESS & RAIL HEIGHT

24'-10" CLEAR ROADWAY	ASPHALT OVERLAY THICKNESS	RAIL HEIGHT
	@ MID-SPAN	@ MID-SPAN
	NORMAL CROWN SECTION	
55' UNITS	1 1/2"	2'-9 3/4"

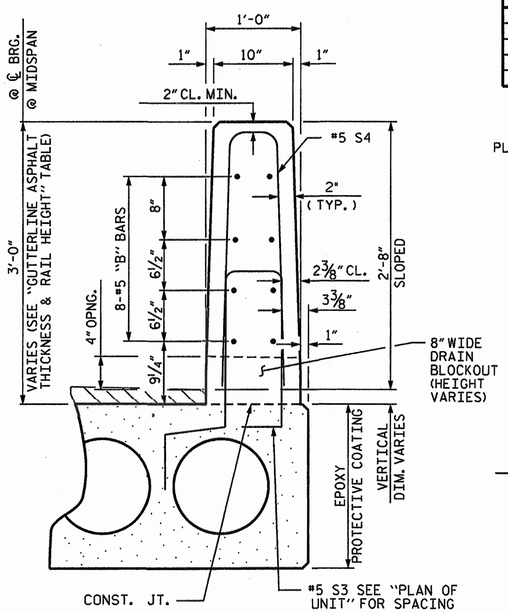

VERTICAL CONCRETE BARRIER RAIL SECTION

℄ 1/2" EXP. JT. MAT'L HELD IN PLACE WITH GALVANIZED NAILS. (NOTE: OMIT EXP. JT. MAT'L. WHEN SLIP FORM IS USED.)

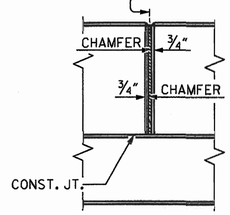

ELEVATION AT EXPANSION JOINTS

PROJECT NO. BD-5110W
UNION COUNTY
STATION: 12+92.50 -L-

SHEET 3 OF 3

STATE OF NORTH CAROLINA
DEPARTMENT OF TRANSPORTATION
RALEIGH

STANDARD
3'-0" X 1'-9"
PRESTRESSED CONCRETE
CORED SLAB UNIT
105° SKEW

NORTH CAROLINA PROFESSIONAL SEAL 20125 ENGINEER
11-15-11

ASSEMBLED BY : R.Z. DEAN	DATE : 10/2011		
CHECKED BY : M.G. CHEEK	DATE : 11/2011		
DRAWN BY : DGE 5/09			
CHECKED BY: BCH 6/09			

REVISIONS						SHEET NO.
NO.	BY:	DATE:	NO.	BY:	DATE:	S-6
1			3			TOTAL SHEETS
2			4			13

15-NOV-2011 08:20
S:\PGII\sdquady\Low_Impact_Bridges\BD-5110W\Final Plans\BD-5110W_SD_CS.dgn
dahodge

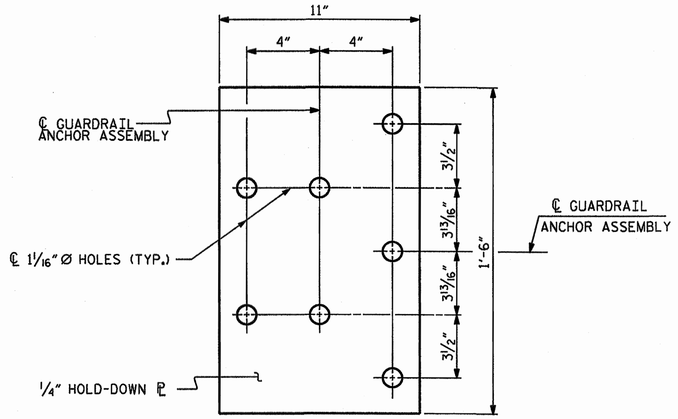

PLAN

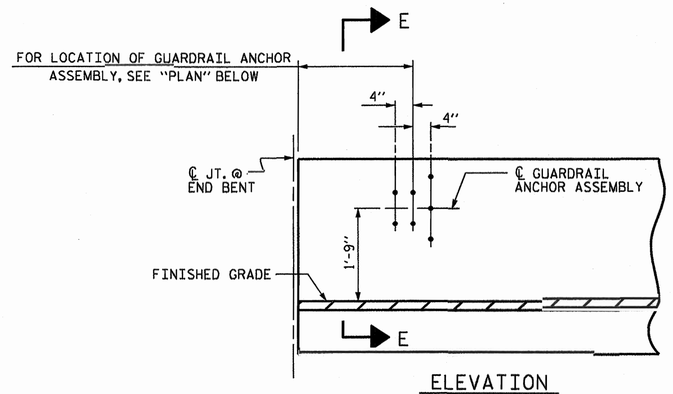

ELEVATION

NOTES

THE GUARDRAIL ANCHOR ASSEMBLY SHALL CONSIST OF A 1/4" HOLD DOWN PLATE AND 7 - 7/8" Ø BOLTS WITH NUTS AND WASHERS.

THE HOLD-DOWN PLATE SHALL CONFORM TO AASHTO M270 GRADE 36. AFTER FABRICATION, THE HOLD-DOWN PLATE SHALL BE HOT-DIP GALVANIZED IN ACCORDANCE WITH AASHTO M111.

BOLTS SHALL CONFORM TO THE REQUIREMENTS OF ASTM A307 AND NUTS SHALL CONFORM TO THE REQUIREMENTS OF AASHTO M291. BOLTS, NUTS AND WASHERS SHALL BE GALVANIZED. (AT THE CONTRACTOR'S OPTION, STAINLESS STEEL BOLTS, NUTS AND WASHERS MAY BE USED AS AN ALTERNATE FOR THE 7/8" Ø GALVANIZED BOLTS, NUTS AND WASHERS. THEY SHALL CONFORM TO OR EXCEED THE MECHANICAL REQUIREMENTS OF ASTM A307. THE USE OF THIS ALTERNATE SHALL BE APPROVED BY THE ENGINEER.)

THE GUARDRAIL ANCHOR ASSEMBLY IS REQUIRED AT ALL POINTS WHERE APPROACH GUARDRAIL IS TO BE ATTACHED TO THE END OF BARRIER RAIL. FOR POINTS OF ATTACHMENT, SEE SKETCH.

AFTER INSTALLATION, THE EXPOSED THREAD OF THE BOLT SHALL BE BURRED WITH A SHARP POINTED TOOL.

THE COST OF THE GUARDRAIL ANCHOR ASSEMBLY SHALL BE INCLUDED IN THE UNIT CONTRACT PRICE BID FOR VERTICAL CONCRETE BARRIER RAIL.

THE VERTICAL REINFORCING BARS MAY BE SHIFTED SLIGHTLY IN THE VERTICAL CONCRETE BARRIER RAIL TO CLEAR ASSEMBLY BOLTS.

THE 1 1/4" Ø HOLES SHALL BE FORMED OR DRILLED WITH A CORE BIT. IMPACT TOOLS WILL NOT BE PERMITTED. ANY CONCRETE DAMAGED BY THIS WORK SHALL BE REPAIRED TO THE SATISFACTION OF THE ENGINEER.

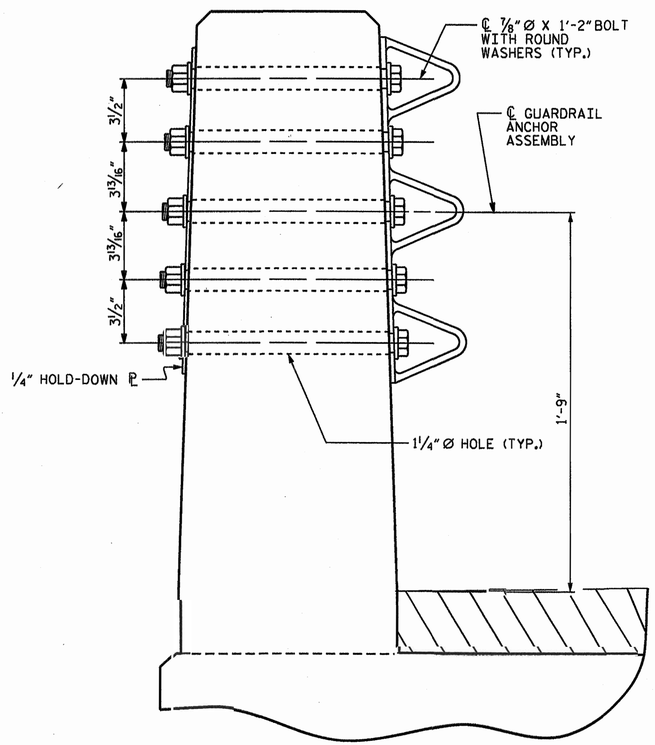

SECTION E-E

GUARDRAIL ANCHOR ASSEMBLY DETAILS

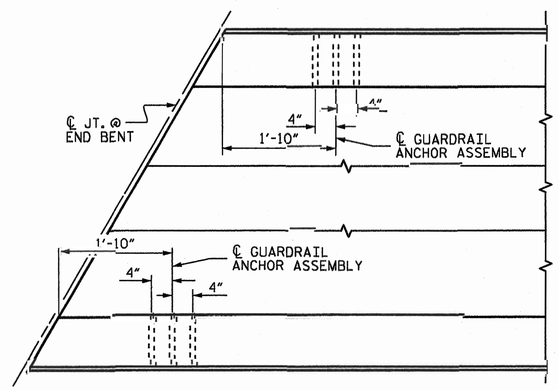

PLAN

LOCATION OF ANCHORS FOR GUARDRAIL

END BENT NO. 1 SHOWN, END BENT NO. 2 SIMILAR.

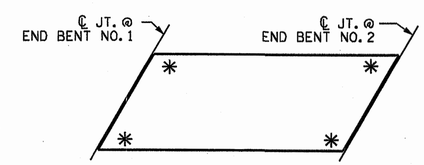

SKETCH SHOWING POINTS OF ATTACHMENT

✳ DENOTES GUARDRAIL ANCHOR ASSEMBLY

PROJECT NO. BD-5110W
UNION COUNTY
STATION: 12+95.50 -L-

STATE OF NORTH CAROLINA
DEPARTMENT OF TRANSPORTATION
RALEIGH

STANDARD
GUARDRAIL ANCHORAGE FOR VERTICAL CONCRETE BARRIER RAIL

NORTH CAROLINA PROFESSIONAL SEAL 20125 ENGINEER MARSHALL M. CHEEK, JR.
11-15-11

ASSEMBLED BY : R.Z. DEAN	DATE : 10/2011		
CHECKED BY : M.G. CHEEK	DATE : 11/2011		
DRAWN BY : MAA 5/10	ADDED 5/6/10		
CHECKED BY : GM 5/10	REV. 10/1/11	MAA/GM	

REVISIONS						SHEET NO.
NO.	BY:	DATE:	NO.	BY:	DATE:	S-7
1			3			TOTAL SHEETS
2			4			13

15-NOV-2011 09:12
S:\PGII\adquady\Low_Impact_Bridges\BD-5110W\Final Plans\BD-5110W_SD_CS.dgn
dahodge

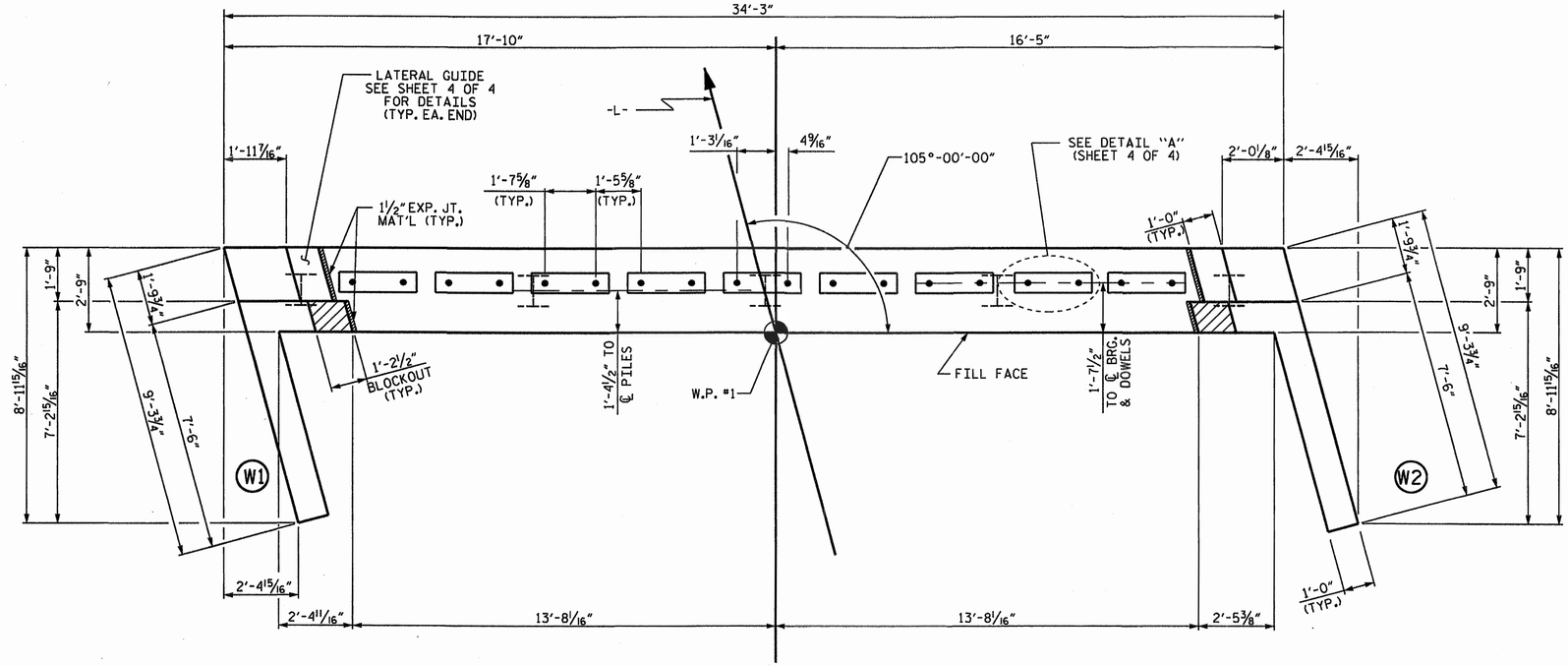

PLAN

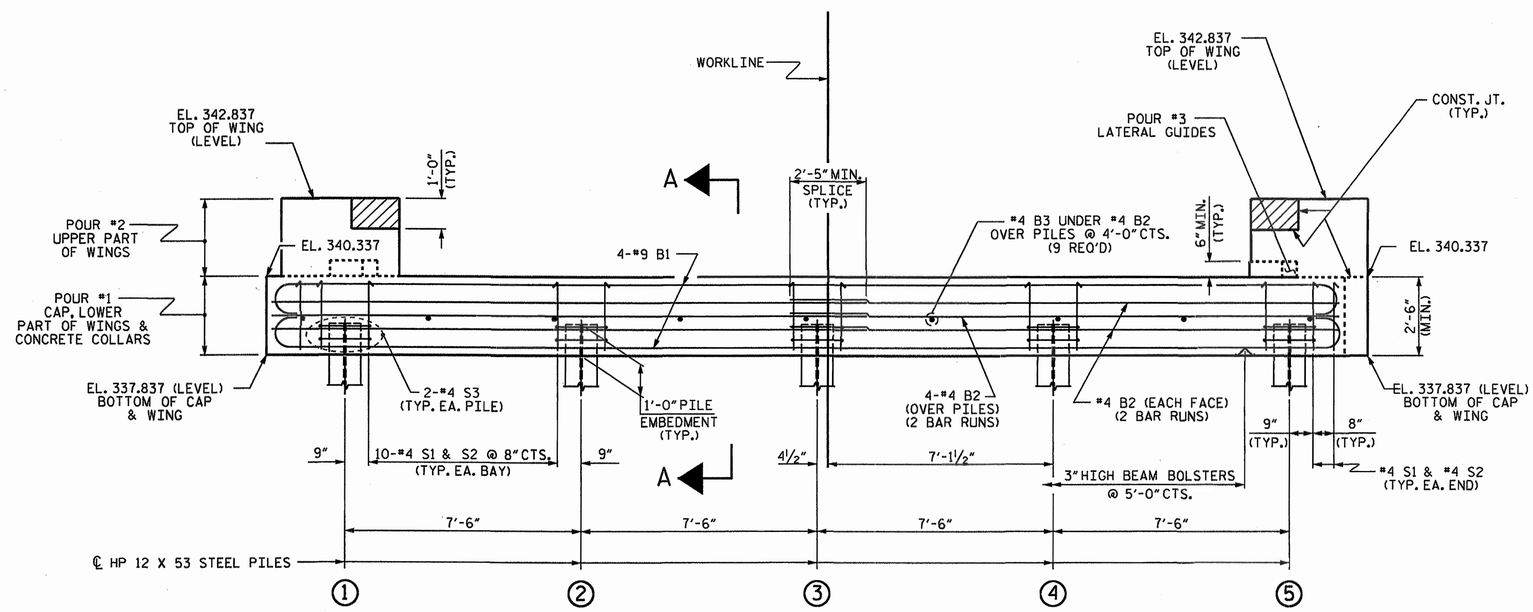

ELEVATION

WINGS NOT SHOWN FOR CLARITY.
FOR SECTION A-A, SEE SHEET 4 OF 4.
CONCRETE COLLARS FOR STEEL PILES NOT SHOWN IN PLAN AND ELEVATION VIEWS FOR CLARITY.
SEE "CORROSION PROTECTION FOR STEEL PILES DETAIL", SHEET 4 OF 4.

NOTES

STIRRUPS IN CAP MAY BE SHIFTED AS NECESSARY TO CLEAR DOWELS.

THE LATERAL GUIDES ARE NOT TO BE POURED UNTIL AFTER THE CORED SLAB UNITS ARE IN PLACE.

THE CONCRETE IN THE SHADED AREA OF THE WING SHALL BE POURED AFTER THE VERTICAL CONCRETE BARRIER RAIL IS CAST IF SLIP FORMING IS USED.

FOR PILE SPLICE DETAILS, SEE SHEET 4 OF 4.

FOR WING DETAILS, SEE SHEET 3 OF 4.

THE CONTRACTOR HAS THE OPTION TO OMIT THE LATERAL GUIDES IF APPROVED BY THE ENGINEER.

PROJECT NO. BD-5110W
UNION COUNTY
STATION: 12+92.50 -L-

SHEET 1 OF 4

STATE OF NORTH CAROLINA
DEPARTMENT OF TRANSPORTATION
RALEIGH

SUBSTRUCTURE
END BENT NO. 1

ASSEMBLED BY : R.Z. DEAN	DATE : 10/2011
CHECKED BY : M.G. CHEEK	DATE : 11/2011
DRAWN BY : DGE	03/10
CHECKED BY : MKT	03/10

NORTH CAROLINA PROFESSIONAL SEAL 20125 ENGINEER MARSHALL G. CHEEK, JR.
11-15-11

REVISIONS						SHEET NO.
NO.	BY:	DATE:	NO.	BY:	DATE:	S-8
1			3			TOTAL SHEETS
2			4			13

15-NOV-2011 08:18
S:\PGII\adquady\Low_Impact_Bridges\BD-5110W\Final Plans\BD-5110W_SD_E*.dgn
dahodge

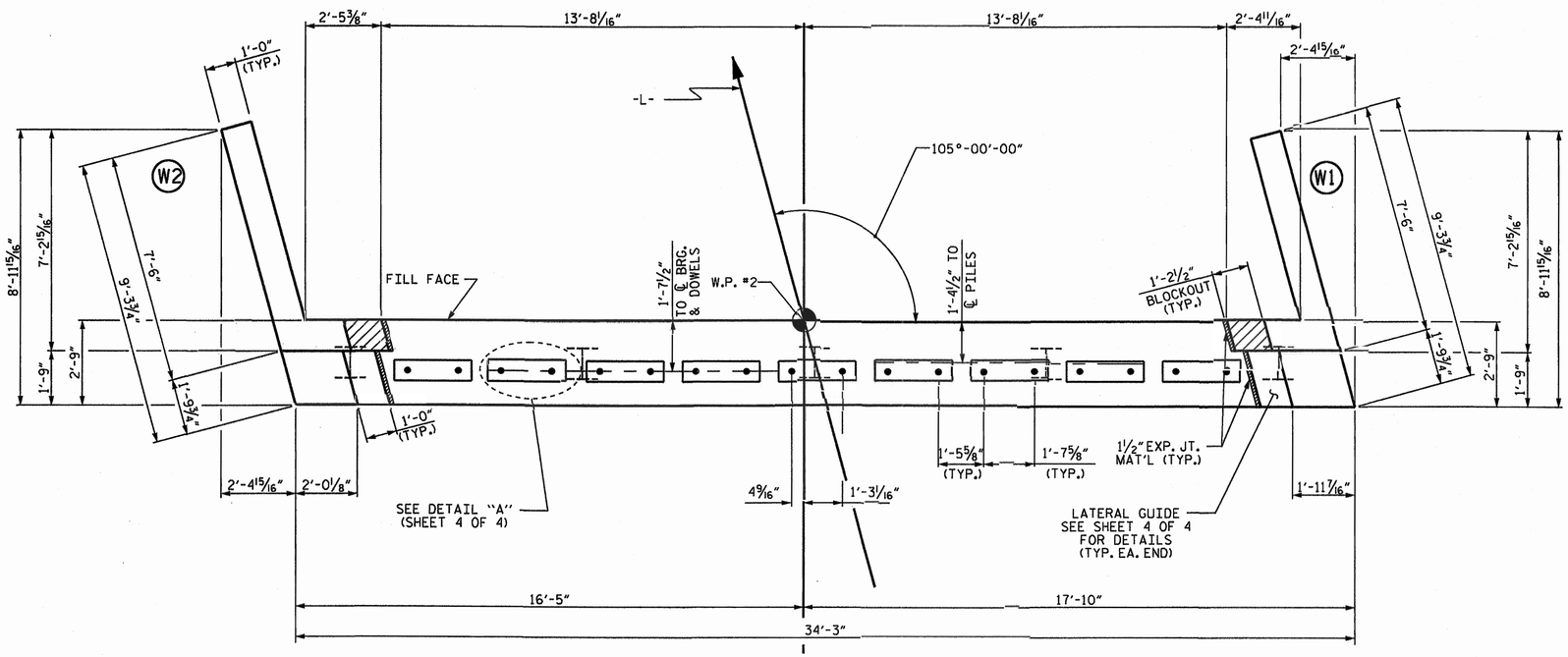

PLAN

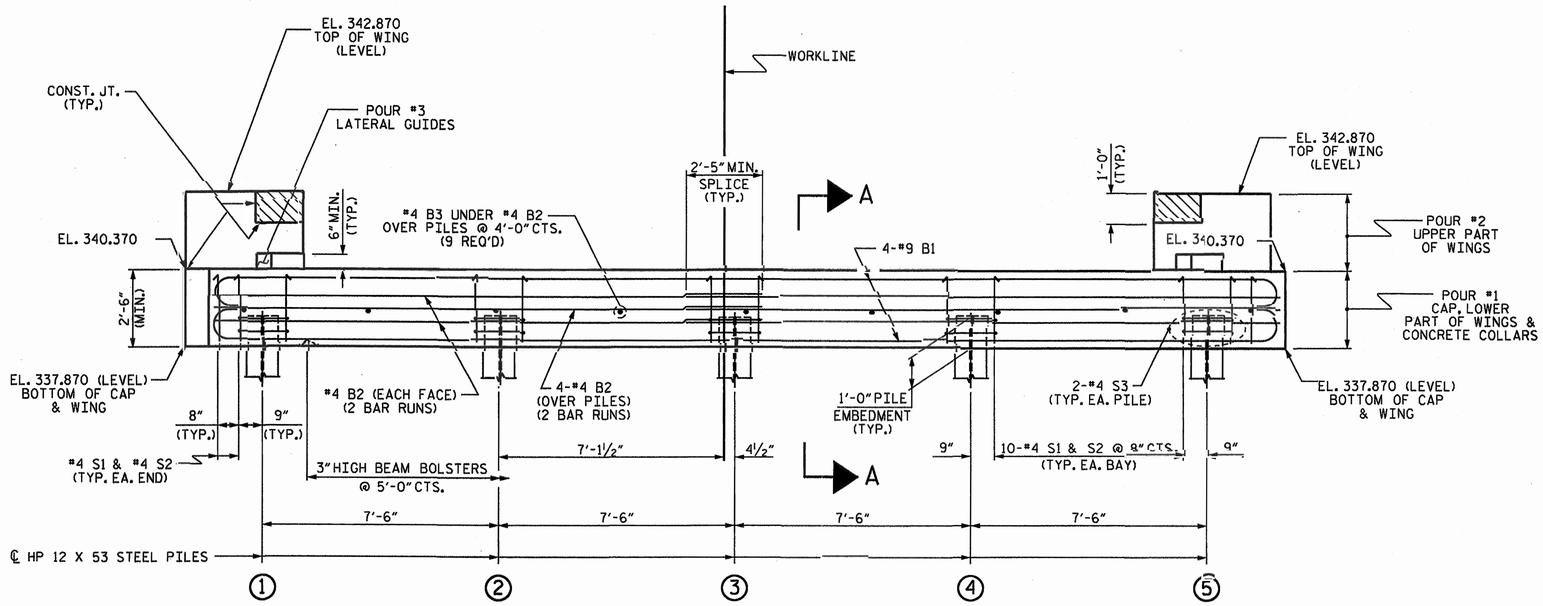

ELEVATION

WINGS NOT SHOWN FOR CLARITY.
FOR SECTION A-A, SEE SHEET 4 OF 4.
CONCRETE COLLARS FOR STEEL PILES NOT SHOWN IN PLAN AND ELEVATION VIEWS FOR CLARITY.
SEE "CORROSION PROTECTION FOR STEEL PILES DETAIL", SHEET 4 OF 4.

NOTES

STIRRUPS IN CAP MAY BE SHIFTED AS NECESSARY TO CLEAR DOWELS.

THE LATERAL GUIDES ARE NOT TO BE POURED UNTIL AFTER THE CORED SLAB UNITS ARE IN PLACE.

THE CONCRETE IN THE SHADED AREA OF THE WING SHALL BE POURED AFTER THE VERTICAL CONCRETE BARRIER RAIL IS CAST IF SLIP FORMING IS USED.

FOR PILE SPLICE DETAILS, SEE SHEET 4 OF 4.

FOR WING DETAILS, SEE SHEET 3 OF 4.

THE CONTRACTOR HAS THE OPTION TO OMIT THE LATERAL GUIDES IF APPROVED BY THE ENGINEER.

PROJECT NO. BD-5110W
UNION COUNTY
STATION: 12+92.50 -L-

SHEET 2 OF 4

STATE OF NORTH CAROLINA
DEPARTMENT OF TRANSPORTATION
RALEIGH

SUBSTRUCTURE
END BENT NO. 2

NORTH CAROLINA PROFESSIONAL SEAL 20125 ENGINEER MARSHALL G. CHEEK, JR.
11-15-11

REVISIONS									SHEET NO.
NO.	BY:	DATE:	NO.	BY:	DATE:	NO.	BY:	DATE:	S-9
1			3			5			TOTAL SHEETS
2			4			6			13

ASSEMBLED BY : R.Z. DEAN		DATE : 10/2011	
CHECKED BY : M.G. CHEEK		DATE : 11/2011	
DRAWN BY : DGE	03/10		
CHECKED BY : MKT	03/10		

15-NOV-2011 08:18
S:\PDII\sdquady\Low_Impact_Bridges\BD-5110W\Final Plans\BD-5110W_SD_E*.dgn
dahodge

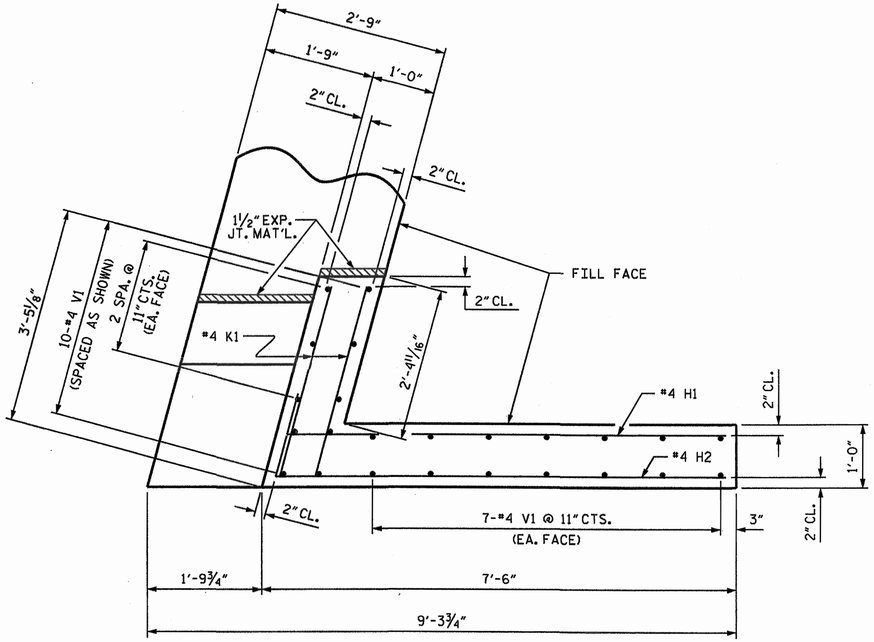

PLAN OF WING (W1)

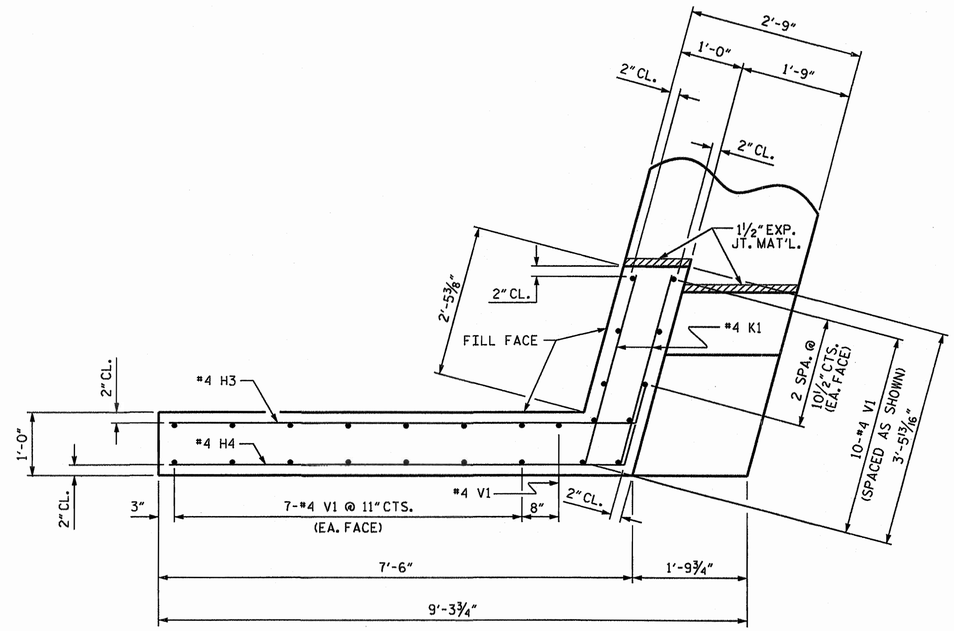

PLAN OF WING (W2)

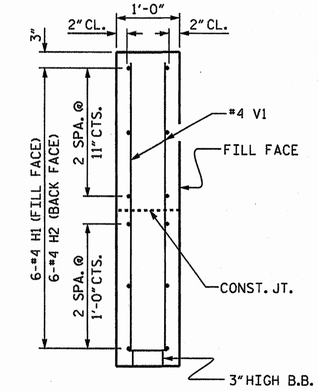

SECTION X-X

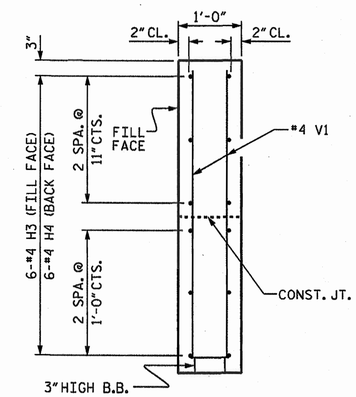

SECTION Y-Y

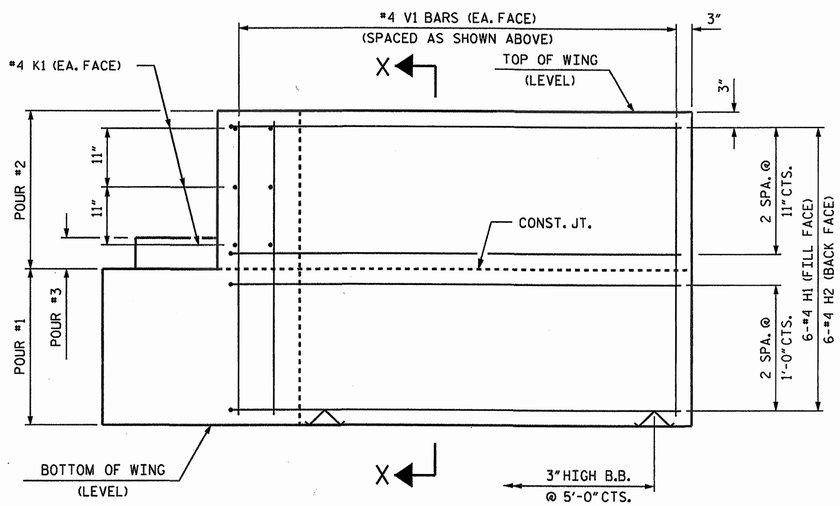

ELEVATION OF WING (W1)

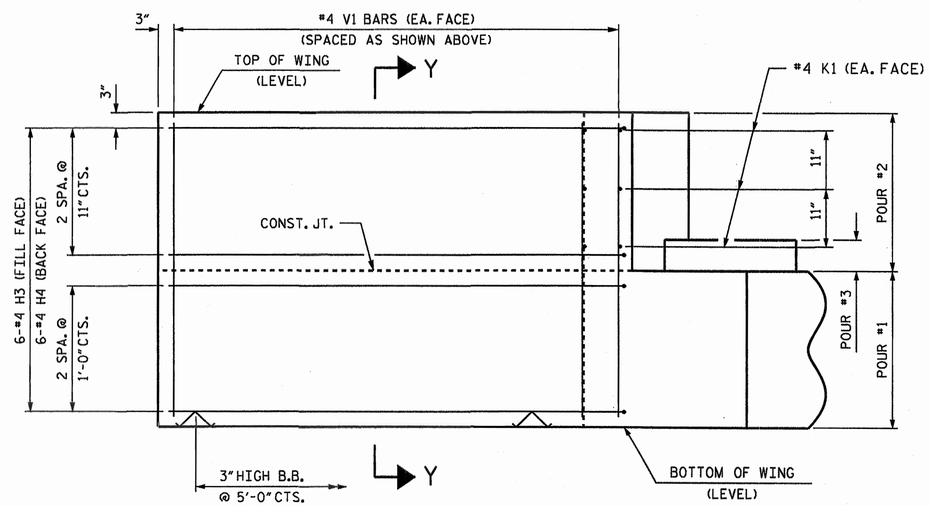

ELEVATION OF WING (W2)

WING DETAILS

PROJECT NO. BD-5110W
UNION COUNTY
STATION: 12+95.50 -L-

SHEET 3 OF 4

STATE OF NORTH CAROLINA
DEPARTMENT OF TRANSPORTATION
RALEIGH

SUBSTRUCTURE
END BENT
WING DETAILS

NORTH CAROLINA PROFESSIONAL SEAL 20125 ENGINEER MARSHALL G. CHEEK, JR.
11-15-11

ASSEMBLED BY : R.Z. DEAN	DATE : 10/2011		
CHECKED BY : M.G. CHEEK	DATE : 11/2011		
DRAWN BY : DGE 03/10			
CHECKED BY : MKT 03/10			

REVISIONS						SHEET NO.
NO.	BY:	DATE:	NO.	BY:	DATE:	S-10
1			3			TOTAL SHEETS
2			4			13

15-NOV-2011 08:18
S:\PGII\sdquady\Low_Impact_Bridges\BD-5110W\Final Plans\BD-5110W_SD_E*.dgn
dahodge

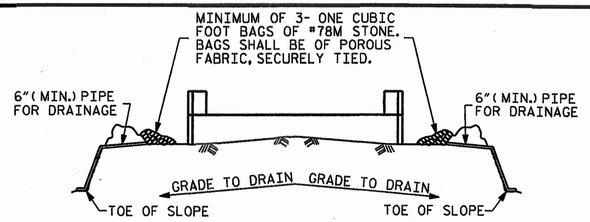

BAGGED STONE AND PIPE SHALL BE PLACED IMMEDIATELY AFTER COMPLETION OF END BENT EXCAVATION. PIPE MAY BE EITHER CONCRETE, CORRUGATED STEEL, CORRUGATED ALUMINUM ALLOY, OR CORRUGATED PLASTIC. PERFORATED PIPE WILL NOT BE ALLOWED.

BAGGED STONE SHALL REMAIN IN PLACE UNTIL THE ENGINEER DIRECTS THAT IT BE REMOVED. THE CONTRACTOR SHALL REMOVE AND DISPOSE OF SILT ACCUMULATIONS AT BAGGED STONE WHEN SO DIRECTED BY THE ENGINEER. BAGS SHALL BE REMOVED AND REPLACED WHENEVER THE ENGINEER DETERMINES THAT THEY HAVE DETERIORATED AND LOST THEIR EFFECTIVENESS.

NO SEPARATE PAYMENT WILL BE MADE FOR THIS WORK AND THE ENTIRE COST OF THIS WORK SHALL BE INCLUDED IN THE UNIT CONTRACT PRICE BID FOR THE SEVERAL PAY ITEMS.

TEMPORARY DRAINAGE AT END BENT

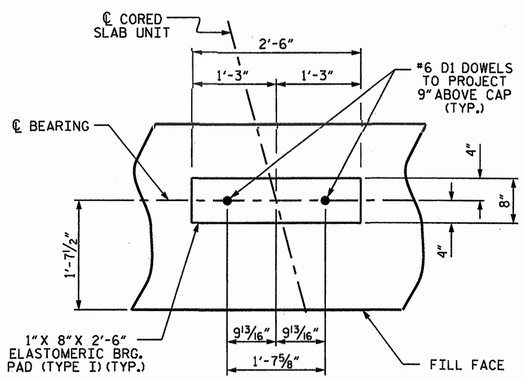

DETAIL "A"

(END BENT NO. 1 SHOWN, END BENT NO. 2 SIMILAR BY ROTATION)

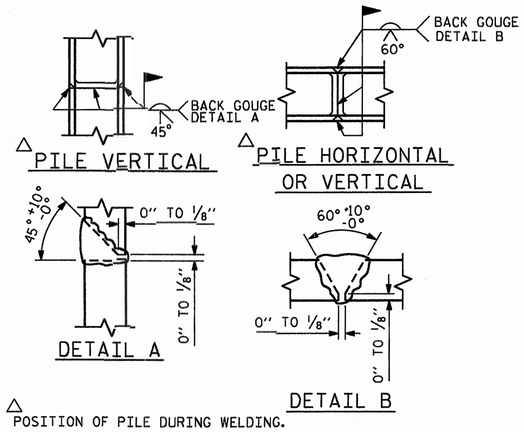

PILE SPLICE DETAILS

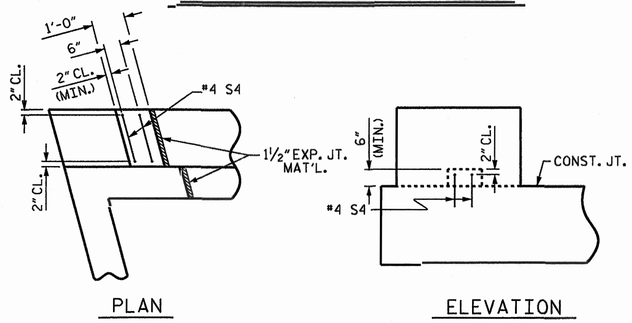

LATERAL GUIDE DETAILS

(END BENT NO. 1, LEFT LATERAL GUIDE SHOWN, RIGHT END SIMILAR)
(END BENT NO. 2 SIMILAR BY ROTATION)

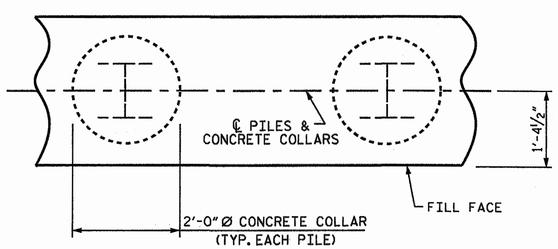

PLAN

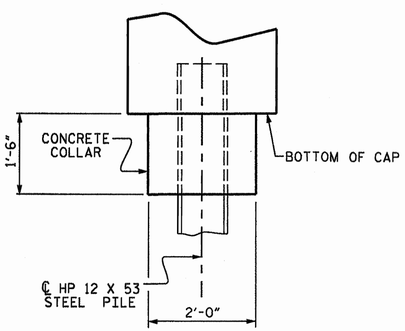

ELEVATION

CORROSION PROTECTION FOR STEEL PILES DETAIL

(END BENT NO. 1 SHOWN, END BENT NO. 2 SIMILAR BY ROTATION)

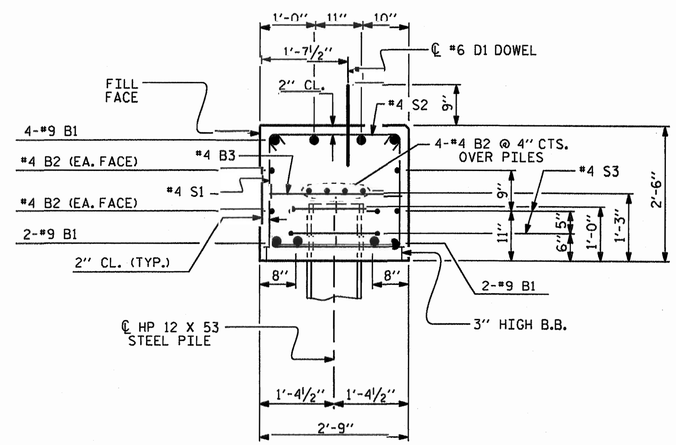

SECTION A-A

(CONCRETE COLLAR NOT SHOWN FOR CLARITY.
SEE "CORROSION PROTECTION FOR STEEL PILES DETAIL.")

BAR TYPES

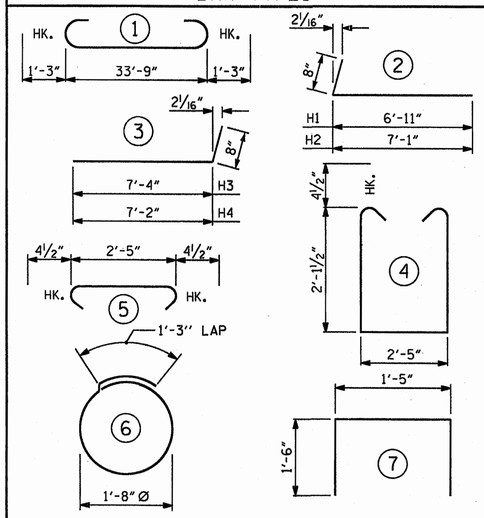

ALL BAR DIMENSIONS ARE OUT TO OUT.

END BENT NO. 1		END BENT NO. 2	
HP 12 X 53 STEEL PILES		HP 12 X 53 STEEL PILES	
NO: 5	LIN. FT.= 50	NO: 5	LIN. FT.= 100

BILL OF MATERIAL FOR ONE END BENT

BAR	NO.	SIZE	TYPE	LENGTH	WEIGHT
B1	8	#9	1	36'-3"	986
B2	16	#4	STR	18'-2"	194
B3	9	#4	STR	2'-5"	15
D1	18	#6	STR	1'-6"	41
H1	6	#4	2	7'-7"	30
H2	6	#4	2	7'-9"	31
H3	6	#4	3	8'-0"	32
H4	6	#4	3	7'-10"	31
K1	12	#4	STR	3'-1"	25
S1	44	#4	4	7'-5"	218
S2	44	#4	5	3'-2"	93
S3	10	#4	6	6'-6"	43
S4	4	#4	7	4'-5"	12
V1	49	#4	STR	4'-8"	153
REINFORCING STEEL (FOR ONE END BENT)					1904 LBS

CLASS A CONCRETE BREAKDOWN (FOR ONE END BENT)

POUR #1	CAP, LOWER PART OF WINGS & COLLARS	10.8 C.Y.
POUR #2	UPPER PART OF WINGS	1.8 C.Y.
POUR #3	LATERAL GUIDES	0.1 C.Y.
TOTAL CLASS A CONCRETE		12.7 C.Y.

PROJECT NO. BD-5110W
UNION COUNTY
STATION: 12+92.50 -L-

SHEET 4 OF 4

STATE OF NORTH CAROLINA
DEPARTMENT OF TRANSPORTATION
RALEIGH

SUBSTRUCTURE

END BENT NO. 1 & 2 DETAILS

NORTH CAROLINA PROFESSIONAL SEAL 20125 ENGINEER M. G. CHEEK, JR.
11-15-11

REVISIONS							SHEET NO.
NO.	BY:	DATE:	NO.	BY:	DATE:		S-11
1			3				TOTAL SHEETS
2			4				13

ASSEMBLED BY : R.Z. DEAN	DATE : 10/2011	
CHECKED BY : M.G. CHEEK	DATE : 11/2011	
DRAWN BY : DGE	03/10	
CHECKED BY : MKT	03/10	

15-NOV-2011 08:17
S:\PDII\sdquady\Low_Impact_Bridges\BD-5110W\Final Plans\BD-5110W_SD_E*.dgn
dahodge

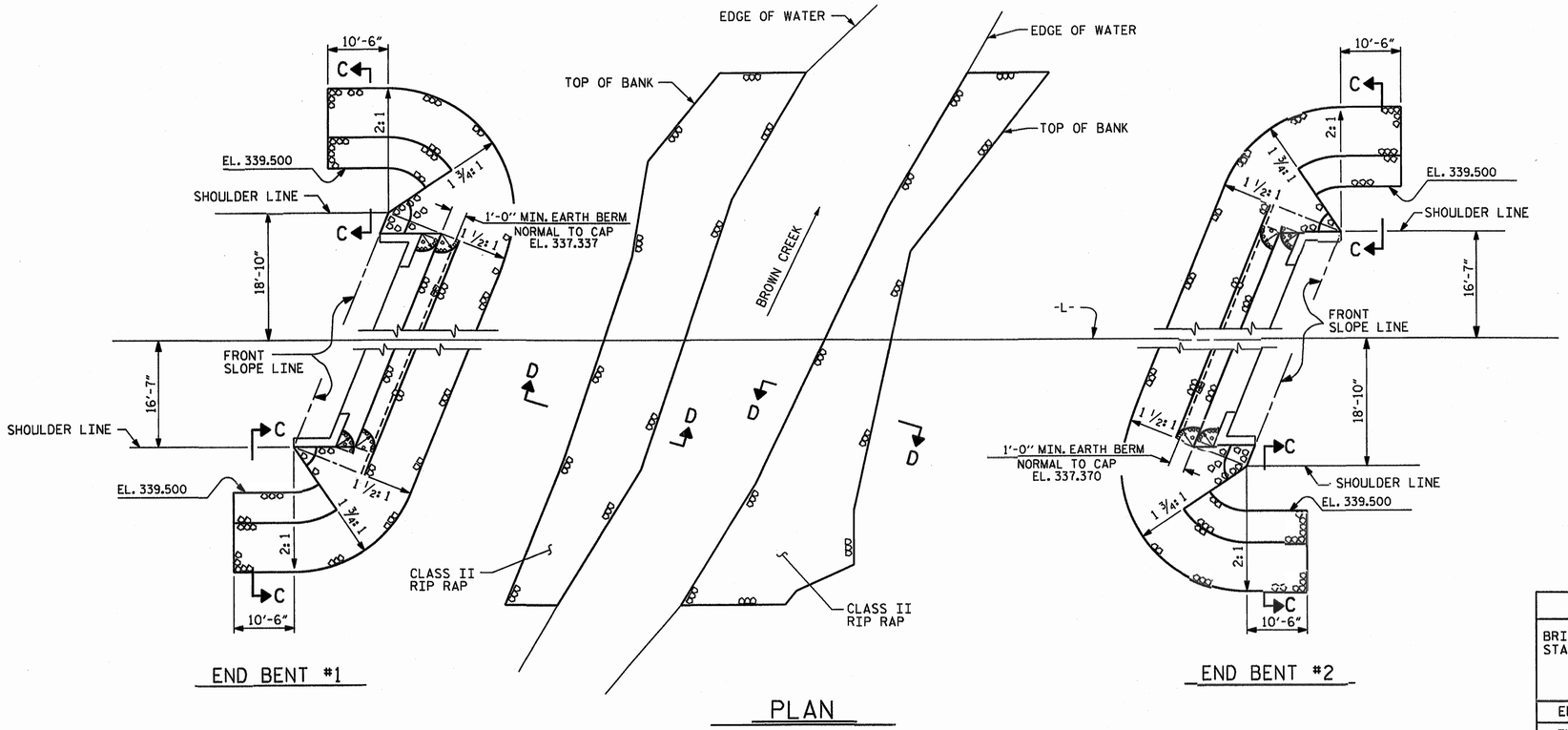

PLAN

NOTES :

FOR BERM WIDTH DIMENSIONS, SEE GENERAL DRAWING.

FOLLOWING REMOVAL OF THE EXISTING STRUCTURE, AND AT THE DIRECTION OF THE ENGINEER, THE DISTURBED AREAS OF THE BANKS SHALL BE COVERED WITH CLASS II RIP RAP.

ESTIMATED QUANTITIES

BRIDGE @ STA. 12+92.50 -L-	RIP RAP CLASS II (2'-0" THICK)	GEOTEXTILE FOR DRAINAGE
	TONS	SQUARE YARDS
END BENT 1	105	117
END BENT 2	105	117
* CREEK BANKS	99	125

* CREEK BANK QUANTITIES ARE INCLUDED WITH END BENT #1 QUANTITIES IN TOTAL BILL OF MATERIAL.

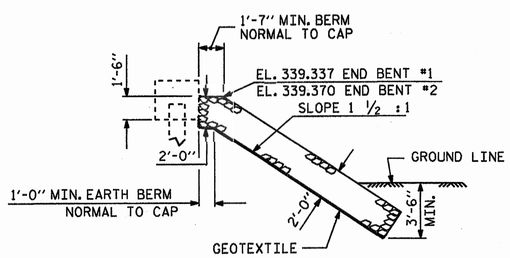

℄ SECTION
BERM RIP RAPPED

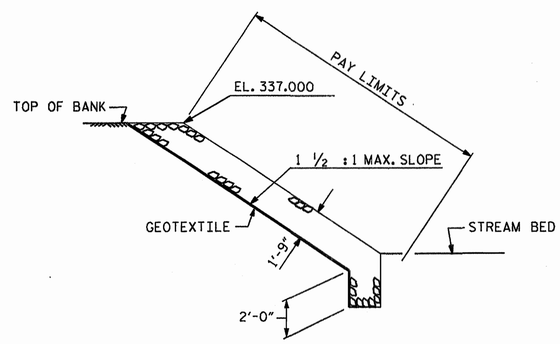

SECTION D-D

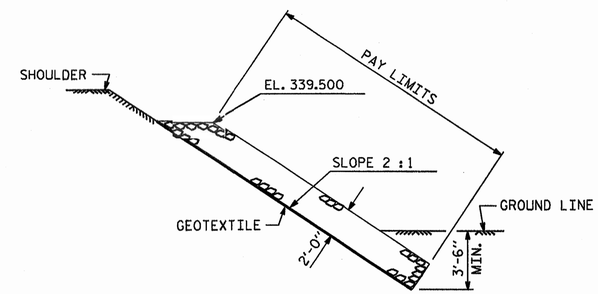

SECTION C-C

PROJECT NO. BD-5110W
UNION COUNTY
STATION: 12+92.50 -L-

STATE OF NORTH CAROLINA
DEPARTMENT OF TRANSPORTATION
RALEIGH
STANDARD
RIP RAP DETAILS

NORTH CAROLINA PROFESSIONAL SEAL 20125 ENGINEER
11-22-11

REVISIONS								SHEET NO.
NO.	BY:	DATE:	NO.	BY:	DATE:			S-12
1			3					TOTAL SHEETS
2			4					13

ASSEMBLED BY : D. HODGE		DATE : 11/11	
CHECKED BY : M.G. CHEEK		DATE : 11/11	
DRAWN BY : REK 1/84	REV. 10/17/00	RWW/LES	
CHECKED BY : RDU 1/84	REV. 5/1/06R	TLA/GM	
	REV. 10/1/11	MAA/GM	

22-NOV-2011 07:45
S:\PGII\adquady\Low_Impact_Bridges\BD-5110W\Final Plans\BD-5110W_SD_GD.DGN
dahodge

STD. NO. RR1 (Sht 3)

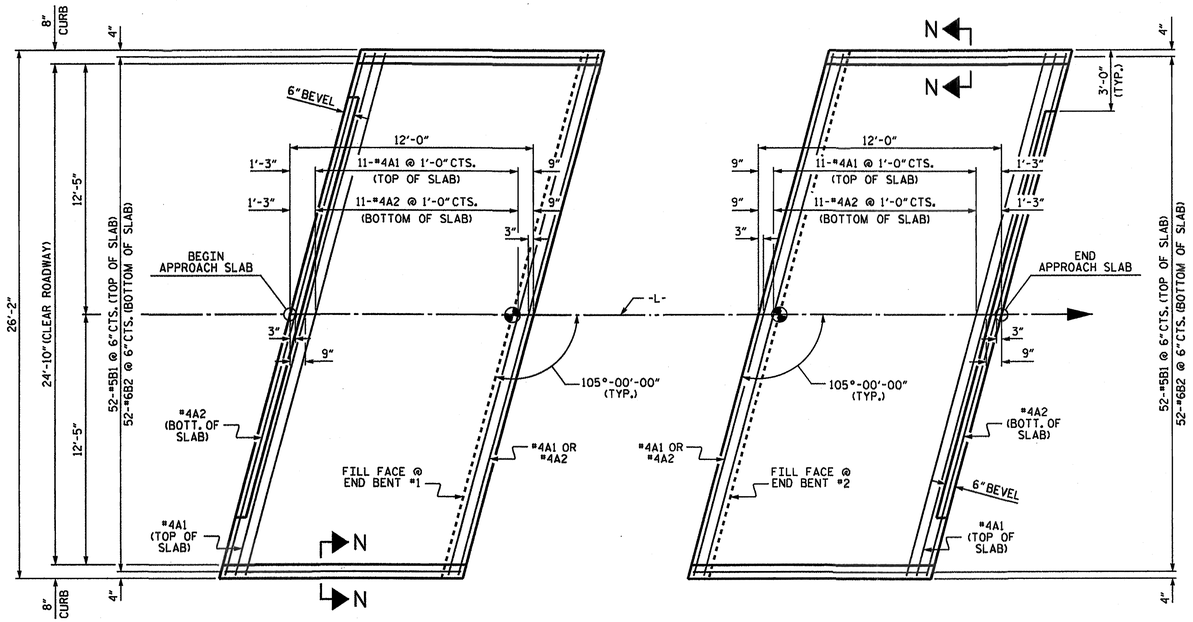

PLAN @ END BENT NO. 1

PLAN @ END BENT NO. 2

DIMENSIONS SHOWN ARE TYPICAL FOR BOTH APPROACH SLABS

NOTES

FOR BRIDGE APPROACH FILL INCLUDING FABRIC, 4"Ø DRAINAGE PIPE, AND #78M STONE BACKFILL, SEE ROADWAY PLANS.

GEOTEXTILE SHALL BE TYPE 1 ENGINEERING FABRIC IN ACCORDANCE WITH THE STANDARD SPECIFICATIONS SECTION 1056.

#78M STONE BACKFILL (CLASS V SELECT MATERIAL) SHALL BE IN ACCORDANCE WITH STANDARD SPECIFICATIONS SECTION 1016.

#78M STONE BACKFILL IS TO BE CONTINUOUS ALONG FILL FACE OF BACKWALL FROM OUTSIDE EDGE TO OUTSIDE EDGE OF APPROACH SLAB.

FOR THE 4"Ø DRAINAGE PIPE OUTLET(S), SEE ROADWAY STANDARD DRAWINGS.

AREA BETWEEN THE WINGWALL AND APPROACH SLAB SHALL BE GRADED TO DRAIN THE WATER AWAY FROM THE FILL FACE OF THE BRIDGE AND SHALL BE PAVED. SEE ROADWAY PLANS.

FOR JOINT DETAILS, SEE "PRESTRESSED CONCRETE CORED SLAB UNIT" SHEETS.

THE JOINT AT THE END BENT SHALL BE GROUTED AS SOON AS PRACTICAL AFTER THE CONSTRUCTION OF THE APPROACH SLABS.

THE CONTRACTOR HAS THE OPTION TO OMIT GROUT BETWEEN THE APPROACH SLAB AND THE CORED SLAB UNITS AND POUR THE APPROACH SLAB DIRECTLY AGAINST THE CORED SLAB UNITS. SEE "OPTIONAL JOINT DETAIL".

APPROACH SLAB GROOVING IS NOT REQUIRED.

BILL OF MATERIAL

APPROACH SLAB AT EB NO. 1

BAR	NO.	SIZE	TYPE	LENGTH	WEIGHT
* A1	13	#4	STR	26'-8"	232
A2	13	#4	STR	26'-8"	232
* B1	52	#5	STR	11'-1"	601
B2	52	#6	STR	11'-7"	905
REINFORCING STEEL				LBS.	1137
* EPOXY COATED REINFORCING STEEL				LBS.	833
CLASS AA CONCRETE				C. Y.	14.9

APPROACH SLAB AT EB NO. 2

BAR	NO.	SIZE	TYPE	LENGTH	WEIGHT
* A1	13	#4	STR	26'-8"	232
A2	13	#4	STR	26'-8"	232
* B1	52	#5	STR	11'-1"	601
B2	52	#6	STR	11'-7"	905
REINFORCING STEEL				LBS.	1137
* EPOXY COATED REINFORCING STEEL				LBS.	833
CLASS AA CONCRETE				C. Y.	14.9

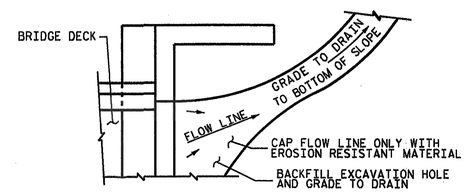

NOTE: IF THE APPROACH SLAB IS NOT CONSTRUCTED IMMEDIATELY AFTER THE BACKFILLING OF THE END BENT EXCAVATION, GRADE TO DRAIN TO THE BOTTOM OF THE SLOPE AND PROVIDE EROSION RESISTANT MATERIAL, SUCH AS FIBERGLASS ROVING OR AS DIRECTED BY THE ENGINEER TO PREVENT SOIL EROSION AND TO PROTECT THE AREA ADJACENT TO THE STRUCTURE. THE CONTRACTOR WILL BE REQUIRED TO REMOVE THESE MATERIALS PRIOR TO CONSTRUCTION OF THE APPROACH SLAB.

TEMPORARY DRAINAGE DETAIL

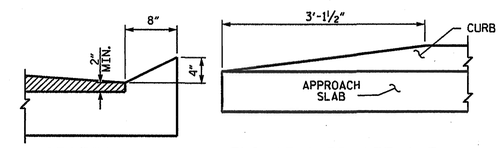

SECTION N-N

END OF CURB WITHOUT SHOULDER BERM GUTTER

CURB DETAILS

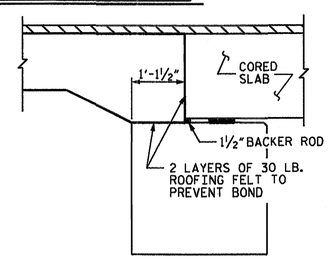

OPTIONAL JOINT DETAIL

SPLICE LENGTHS		
BAR SIZE	EPOXY COATED	UNCOATED
#4	2'-0"	1'-9"
#5	2'-6"	2'-2"
#6	3'-10"	2'-7"

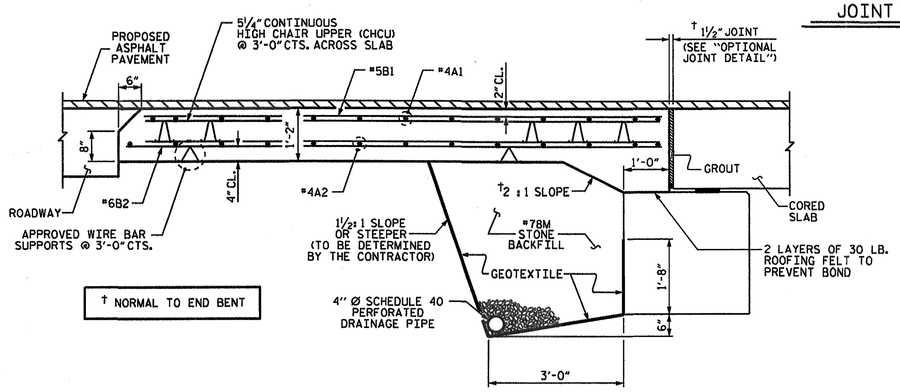

† NORMAL TO END BENT

SECTION THRU SLAB

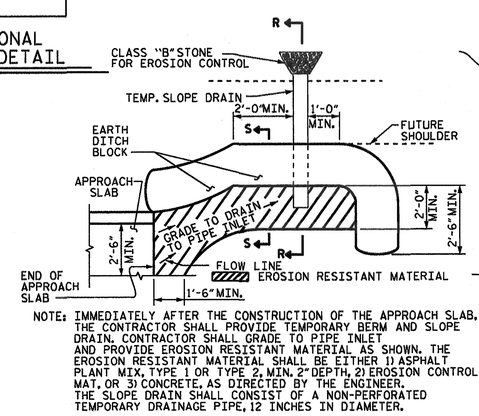

NOTE: IMMEDIATELY AFTER THE CONSTRUCTION OF THE APPROACH SLAB, THE CONTRACTOR SHALL PROVIDE TEMPORARY BERM AND SLOPE DRAIN. CONTRACTOR SHALL GRADE TO PIPE INLET AND PROVIDE EROSION RESISTANT MATERIAL AS SHOWN. THE EROSION RESISTANT MATERIAL SHALL BE EITHER 1) ASPHALT PLANT MIX, TYPE 1 OR TYPE 2, MIN. 2" DEPTH, 2) EROSION CONTROL MAT, OR 3) CONCRETE, AS DIRECTED BY THE ENGINEER. THE SLOPE DRAIN SHALL CONSIST OF A NON-PERFORATED TEMPORARY DRAINAGE PIPE, 12 INCHES IN DIAMETER.

PLAN VIEW

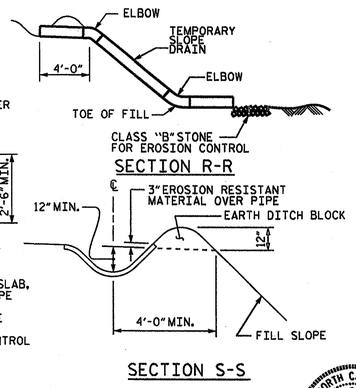

SECTION S-S

TEMPORARY BERM AND SLOPE DRAIN DETAILS

(TO BE USED WHEN SHOULDER BERM GUTTER IS REQUIRED)

PROJECT NO. BD-5110W

UNION COUNTY

STATION: 12+95.50 -L-

STATE OF NORTH CAROLINA
DEPARTMENT OF TRANSPORTATION
RALEIGH

STANDARD
BRIDGE APPROACH SLAB
FOR PRESTRESSED CONCRETE
CORED SLAB UNIT
(SUB-REGIONAL TIER)
105° SKEW

REVISIONS						SHEET NO.
NO.	BY:	DATE:	NO.	BY:	DATE:	S-13
1			3			TOTAL SHEETS
2			4			13

NORTH CAROLINA PROFESSIONAL SEAL 20125 ENGINEER
11-18-11

ASSEMBLED BY :	R.Z. DEAN	DATE :	10/2011
CHECKED BY :	M.G. CHEEK	DATE :	11/2011
DRAWN BY : SHS/MAA	5-09		
CHECKED BY : BCH	5-09		

18-NOV-2011 09:36
S:\PGII\sdquady\Low_Impact_Bridges\BD-5110W\FinalPlans\BD-5110W_SD_AS.dgn
mpoole

STANDARD NOTES

DESIGN DATA:

SPECIFICATIONS	A.A.S.H.T.O. (CURRENT)
LIVE LOAD	SEE PLANS
IMPACT ALLOWANCE	SEE A.A.S.H.T.O.
STRESS IN EXTREME FIBER OF	
STRUCTURAL STEEL - AASHTO M270 GRADE 36	20,000 LBS. PER SQ. IN.
- AASHTO M270 GRADE 50W	27,000 LBS. PER SQ. IN.
- AASHTO M270 GRADE 50	27,000 LBS. PER SQ. IN.
REINFORCING STEEL IN TENSION	
GRADE 60	24,000 LBS. PER SQ. IN.
CONCRETE IN COMPRESSION	1,200 LBS. PER SQ. IN.
CONCRETE IN SHEAR	SEE A.A.S.H.T.O.
STRUCTURAL TIMBER - TREATED OR	
UNTREATED - EXTREME FIBER STRESS	1,800 LBS. PER SQ. IN.
COMPRESSION PERPENDICULAR TO GRAIN OF TIMBER	375 LBS. PER SQ. IN.
EQUIVALENT FLUID PRESSURE OF EARTH	30 LBS. PER CU. FT. (MINIMUM)

MATERIAL AND WORKMANSHIP:

EXCEPT AS MAY OTHERWISE BE SPECIFIED ON PLANS OR IN THE SPECIAL PROVISIONS, ALL MATERIAL AND WORKMANSHIP SHALL BE IN ACCORDANCE WITH THE 2006 "STANDARD SPECIFICATIONS FOR ROADS AND STRUCTURES" OF THE N. C. DEPARTMENT OF TRANSPORTATION.

STEEL SHEET PILING FOR PERMANENT OR TEMPORARY APPLICATIONS SHALL BE HOT ROLLED.

CONCRETE:

UNLESS OTHERWISE REQUIRED ON PLANS, CLASS A CONCRETE SHALL BE USED FOR ALL PORTIONS OF ALL STRUCTURES WITH THE EXCEPTION THAT: CLASS AA CONCRETE SHALL BE USED IN BRIDGE SUPERSTRUCTURES, ABUTMENT BACKWALLS, AND APPROACH SLABS; AND CLASS B CONCRETE SHALL BE USED FOR SLOPE PROTECTION AND RIP RAP.

CONCRETE CHAMFERS:

UNLESS OTHERWISE NOTED ON THE PLANS, ALL EXPOSED CORNERS ON STRUCTURES SHALL BE CHAMFERED 3/4" WITH THE FOLLOWING EXCEPTIONS: TOP CORNERS OF CURBS MAY BE ROUNDED TO 1-1/2" RADIUS WHICH IS BUILT INTO CURB FORMS; CORNERS OF TRANSVERSE FLOOR EXPANSION JOINTS SHALL BE ROUNDED WITH A 1/4" FINISHING TOOL UNLESS OTHERWISE REQUIRED ON PLANS; AND CORNERS OF EXPANSION JOINTS IN THE ROADWAY FACES AND TOPS OF CURBS AND SIDEWALKS SHALL BE ROUNDED TO A 1/4" RADIUS WITH A FINISHING STONE OR TOOL UNLESS OTHERWISE REQUIRED ON PLANS.

DOWELS:

DOWELS WHEN INDICATED ON PLANS AS FOR CULVERT EXTENSIONS, SHALL BE EMBEDDED AT LEAST 12" INTO THE OLD CONCRETE AND GROUTED INTO PLACE WITH 1:2 CEMENT MORTAR.

ALLOWANCE FOR DEAD LOAD DEFLECTION, SETTLEMENT, ETC. IN CASTING SUPERSTRUCTURES:

BRIDGES SHALL BE BUILT ON THE GRADE OR VERTICAL CURVE SHOWN ON PLANS. SLABS, CURBS AND PARAPETS SHALL CONFORM TO THE GRADE OR CURVE.

ALL DIMENSIONS WHICH ARE GIVEN IN SECTION AND ARE AFFECTED BY DEAD LOAD DEFLECTIONS ARE DIMENSIONS AT CENTER LINE OF BEARING UNLESS OTHERWISE NOTED ON PLANS. IN SETTING FORMS FOR STEEL BEAM BRIDGES AND PRESTRESSED CONCRETE GIRDER BRIDGES, ADJUSTMENTS SHALL BE MADE DUE TO THE DEAD LOAD DEFLECTIONS FOR THE ELEVATIONS SHOWN. WHERE BLOCKS ARE SHOWN OVER BEAMS FOR BUILDING UP TO THE SLAB, THE VERTICAL DIMENSIONS OF THE BLOCKS SHALL BE ADJUSTED BETWEEN BEARINGS TO COMPENSATE FOR DEAD LOAD DEFLECTIONS, VERTICAL CURVE ORDINATE, AND ACTUAL BEAM CAMBER. WHERE BOTTOM OF SLAB IS IN LINE WITH BOTTOM OF TOP FLANGES, DEPTH OF SLAB BETWEEN BEARINGS SHALL BE ADJUSTED TO COMPENSATE FOR DEAD LOAD DEFLECTION, VERTICAL CURVE ORDINATE, AND ACTUAL BEAM CAMBER.

IN SETTING FALSEWORK AND FORMS FOR REINFORCED CONCRETE SPANS, AN ALLOWANCE SHALL BE MADE FOR DEAD LOAD DEFLECTIONS, SETTLEMENT OF FALSEWORK, AND PERMANENT CAMBER WHICH SHALL BE PROVIDED FOR IN ADDITION TO THE ELEVATIONS SHOWN. AFTER REMOVAL OF THE FALSEWORK, THE FINISHED STRUCTURES SHALL CONFORM TO THE PROFILE AND ELEVATIONS SHOWN ON THE PLANS AND CONSTRUCTION ELEVATIONS FURNISHED BY THE ENGINEER.

DETAILED DRAWINGS FOR FALSEWORK OR FORMS FOR BRIDGE SUPERSTRUCTURE AND ANY STRUCTURE OR PARTS OF A STRUCTURE AS NOTED ON THE PLANS SHALL BE SUBMITTED TO THE ENGINEER FOR APPROVAL BEFORE CONSTRUCTION OF THE FALSEWORK OR FORMS IS STARTED.

REINFORCING STEEL:

ALL REINFORCING STEEL SHALL BE DEFORMED. DIMENSIONS RELATIVE TO PLACEMENT OF REINFORCING ARE TO CENTERS OF BARS UNLESS OTHERWISE INDICATED IN THE PLANS. DIMENSIONS ON BAR DETAILS ARE TO CENTERS OF BARS OR ARE OUT TO OUT AS INDICATED ON PLANS.

WIRE BAR SUPPORTS SHALL BE PROVIDED FOR REINFORCING STEEL WHERE INDICATED ON THE PLANS. WHEN BAR SUPPORT PIECES ARE PLACED IN CONTINUOUS LINES, THEY SHALL BE SO PLACED THAT THE ENDS OF THE SUPPORTING WIRES SHALL BE LAPPED TO LOCK LEGS ON ADJOINING PIECES.

STRUCTURAL STEEL:

AT THE CONTRACTOR'S OPTION, HE MAY SUBSTITUTE 7/8" Ø SHEAR STUDS FOR THE 3/4" Ø STUDS SPECIFIED ON THE PLANS. THIS SUBSTITUTION SHALL BE MADE AT THE RATE OF 3 - 7/8" Ø STUDS FOR 4 - 3/4" Ø STUDS, AND STUD SPACING CHANGES SHALL BE MADE AS NECESSARY TO PROVIDE THE SAME EQUIVALENT NUMBER OF 7/8" Ø STUDS ALONG THE BEAM AS SHOWN FOR 3/4" Ø STUDS BASED ON THE RATIO OF 3 - 7/8" Ø STUDS FOR 4 - 3/4" Ø STUDS. STUDS OF THE LENGTH SPECIFIED ON THE PLANS MUST BE PROVIDED. THE MAXIMUM SPACING SHALL BE 2'-0".

EXCEPT AT THE INTERIOR SUPPORTS OF CONTINUOUS BEAMS WHERE THE COVER PLATE IS IN CONTACT WITH BEARING PLATE, THE CONTRACTOR MAY, AT HIS OPTION, SUBSTITUTE FOR THE COVER PLATES DESIGNATED ON THE PLANS COVER PLATES OF THE EQUIVALENT AREA PROVIDED THESE PLATES ARE AT LEAST 5/16" IN THICKNESS AND DO NOT EXCEED A WIDTH EQUAL TO THE FLANGE WIDTH LESS 2" OR A THICKNESS EQUAL TO 2 TIMES THE FLANGE THICKNESS. THE SIZE OF FILLET WELDS SHALL CONFORM TO THE REQUIREMENTS OF THE CURRENT ANSI/AASHTO/AWS "BRIDGE WELDING CODE". ELECTROSLAG WELDING WILL NOT BE PERMITTED.

WITH THE SOLE EXCEPTION OF EDGES AT SURFACES WHICH BEAR ON OTHER SURFACES, ALL SHARP EDGES AND ENDS OF SHAPES AND PLATES SHALL BE SLIGHTLY ROUNDED BY SUITABLE MEANS TO A RADIUS OF APPROXIMATELY 1/16 INCH OR EQUIVALENT FLAT SURFACE AT A SUITABLE ANGLE PRIOR TO PAINTING, GALVANIZING, OR METALLIZING.

HANDRAILS AND POSTS:

METAL STANDARDS AND FACES OF THE CONCRETE END POSTS FOR THE METAL RAIL SHALL BE SET NORMAL TO THE GRADE OF THE CURB, UNLESS OTHERWISE SHOWN ON PLANS. THE METAL RAIL AND TOPS OF CONCRETE POSTS USED WITH THE ALUMINUM RAIL SHALL BE BUILT PARALLEL TO THE GRADE OF THE CURB.

METAL HANDRAILS SHALL BE IN ACCORDANCE WITH THE PLANS. RAILS SHALL BE AS MANUFACTURED FOR BRIDGE RAILING. CASTINGS SHALL BE OF A UNIFORM APPEARANCE. FINS AND OTHER DEFORMATIONS RESULTING FROM CASTING OR OTHERWISE SHALL BE REMOVED IN A MANNER SO THAT A UNIFORM COLORING OF THE COMPLETED CASTING SHALL BE OBTAINED. CASTINGS WITH DISCOLORATIONS OR OF NON-UNIFORM COLORING WILL NOT BE ACCEPTED. CERTIFIED MILL REPORTS ARE REQUIRED FOR METAL RAILS AND POSTS.

SPECIAL NOTES:

GENERALLY, IN CASE OF DISCREPANCY, THIS STANDARD SHEET OF NOTES SHALL GOVERN OVER THE SPECIFICATIONS, BUT THE REMAINDER OF THE PLANS SHALL GOVERN OVER NOTES HEREON, AND SPECIAL PROVISIONS SHALL GOVERN OVER ALL. SEE SPECIFICATIONS ARTICLE 105-4.

ENGLISH

JANUARY, 1990