STATE	STATE PROJECT REFERENCE NO.	SHEET NO.	TOTAL SHEETS
N.C.	17BP.10.R.43	1	

STATE PROJ.NO.	F.A.PROJ.NO.	DESCRIPTION
17BP.10.R.43		PE
17BP.10.R.43		R/W & UTILITIES
17BP.10.R.43		CONSTR

STATE OF NORTH CAROLINA
DIVISION OF HIGHWAYS

ANSON COUNTY

LOCATION: BRIDGE #030244 OVER CRANES BRANCH ON SR 1429 (CAMERON–BRILEY ROAD)

TYPE OF WORK: PAVING, GRADING, DRAINAGE & STRUCTURE

See Sheet 1-A For Index of Sheets
See Sheet 1-B For Conventional Symbols

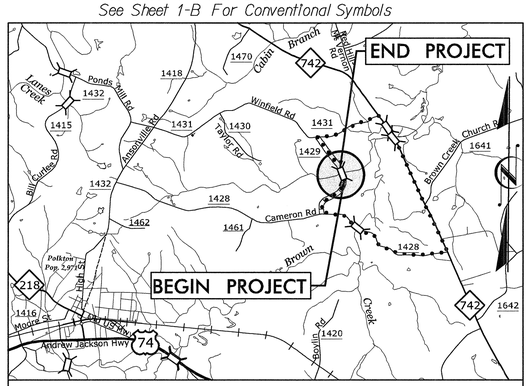

VICINITY MAP N.T.S.

NAD 83/ NSRS 2007

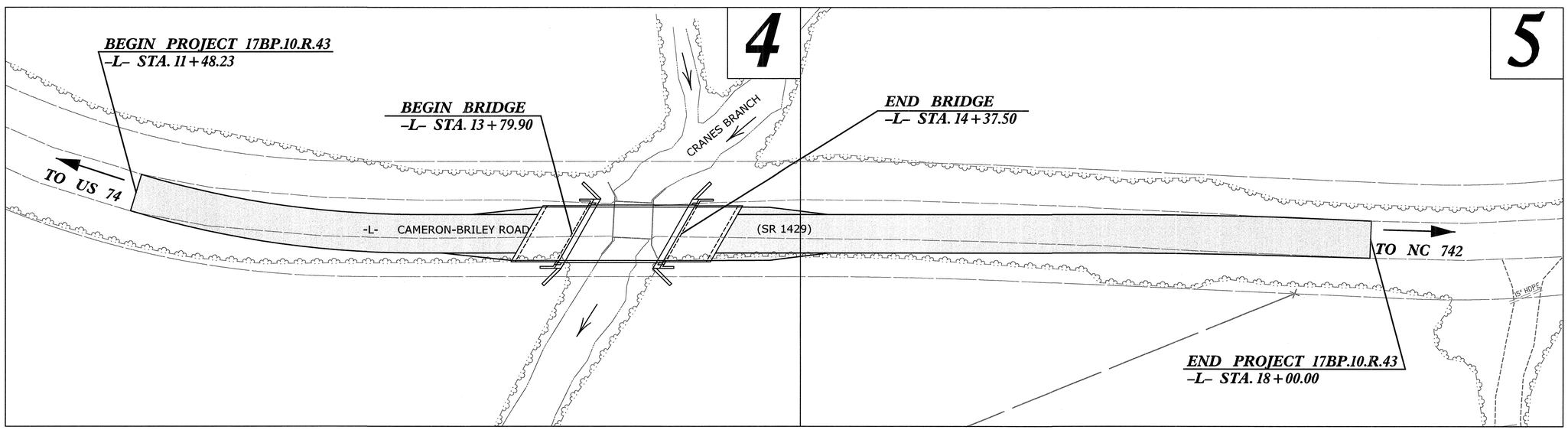

NCDOT CONTACT:
GARLAND HAYWOOD, P.E.
DIVISION BRIDGE PROGRAM MANAGER
(704) 983–4400

THIS PROJECT IS WITHIN THE MUNCIPAL BOUNDARIES OF POLKTON.
CLEARING ON THIS PROJECT SHALL BE PERFORMED
TO THE LIMITS ESTABLISHED BY METHOD II.

GRAPHIC SCALES

20 10 0 20 40
PLANS

20 10 0 20 40
PROFILE (HORIZONTAL)

4 2 0 4 8
PROFILE (VERTICAL)

DESIGN DATA

ADT 2012 = NA
ADT NA = NA
DHV = NA
D = NA
T = NA *
V = 55 MPH
TTST = NA DUAL = NA
FUNC CLASS = RURAL LOCAL

PROJECT LENGTH

LENGTH OF STRUCTURE PROJECT 17BP.10.R.43 = 0.011 MILES
LENGTH OF ROADWAY PROJECT 17BP.10.R.43 = 0.112 MILES
TOTAL LENGTH OF PROJECT 17BP.10.R.43 = 0.123 MILES
DESIGN EXCEPTION FOR:
- DESIGN SPEED
- VERTICAL ALIGNMENT

Prepared for NCDOT In the Office of:
Gannett Fleming
GANNETT FLEMING, INC.
301 S. McDOWELL STREET, SUITE 1008
CHARLOTTE, NORTH CAROLINA 28204-2644
PHONE: 704-375-2438 FAX: 704-332-9361
GF PROJECT NO.– 055335.264
NC Lic. No. F-0270

2012 STANDARD SPECIFICATIONS

RIGHT OF WAY DATE:
DECEMBER 2012

LETTING DATE:
APRIL 2013

ALLISON C. JOHNSON, P.E.
PROJECT ENGINEER

CANDICE L. LATSON, P.E.
PROJECT DESIGN ENGINEER

HYDRAULICS ENGINEER
NORTH CAROLINA PROFESSIONAL SEAL 21656 ENGINEER ROGER S. WEADON
4/19/13
SIGNATURE: P.E.

ROADWAY DESIGN ENGINEER
NORTH CAROLINA PROFESSIONAL SEAL 19421 ENGINEER ALLISON C. JOHNSON
4/19/13
SIGNATURE: P.E.

DIVISION OF HIGHWAYS
STATE OF NORTH CAROLINA
STATE OF NORTH CAROLINA DEPARTMENT OF TRANSPORTATION

REVISIONS

REVISION	DATE	DESCRIPTION	APPROVED
1	4/19/13	REVISED BRIDGE LAYOUT	ACJ

09/08/99

PROJECT: 17BP.10.R.43

CONTRACT:

K:\55335_Div10\030244\Roadway\Proj\B030244_Rdy_tsh.dgn
Fkeys

PROJECT REFERENCE NO.	SHEET NO.
17BP.10.R.43	1-A
R/W SHEET NO.	
ROADWAY DESIGN ENGINEER	HYDRAULICS ENGINEER

NORTH CAROLINA PROFESSIONAL SEAL 15424 ENGINEER ALLISON C. JOHNSON 1/25/13

NORTH CAROLINA PROFESSIONAL SEAL 21656 ENGINEER ROGER S. WELDON 1/28/13

INDEX OF SHEETS

SHEET NUMBER	SHEET
1	TITLE SHEET
1-A	INDEX OF SHEETS, GENERAL NOTES, AND LIST OF STANDARD DRAWINGS
1-B	CONVENTIONAL SYMBOLS
1-C	SURVEY CONTROL SHEET
2	PAVEMENT SCHEDULE, TYPICAL SECTIONS, AND DETAILS
3	EARTHWORK SUMMARY, SUMMARY OF GUARDRAIL, RIGHT OF WAY SUMMARY & DRAINAGE SUMMARY
4-5	PLAN & PROFILE SHEET
TCP-1 THRU TCP-2	TRAFFIC CONTROL PLANS
EC-1 THRU EC-4	EROSION CONTROL PLANS
X-1 THRU X-5	CROSS-SECTIONS
S-1 THRU S-14	BRIDGE PLANS

GENERAL NOTES

GENERAL NOTES:

2012 SPECIFICATIONS
EFFECTIVE: 01-17-12
REVISED: 11/01/11

GRADING AND SURFACING OR RESURFACING AND WIDENING:

THE GRADE LINES SHOWN DENOTE THE FINISHED ELEVATION OF THE PROPOSED SURFACING AT GRADE POINTS SHOWN ON THE TYPICAL SECTIONS. WHERE NO GRADE LINES ARE SHOWN, THE PROFILES SHOWN DENOTE THE TOP ELEVATION OF THE EXISTING PAVEMENT ALONG THE CENTER LINE OF SURVEY ON WHICH THE PROPOSED RESURFACING WILL BE PLACED. GRADE LINES MAY BE ADJUSTED BY THE ENGINEER IN ORDER TO SECURE A PROPER TIE-IN.

CLEARING:

CLEARING ON THIS PROJECT SHALL BE PERFORMED TO THE LIMITS ESTABLISHED BY METHOD II.

SUPERELEVATION:

ALL CURVES ON THIS PROJECT SHALL BE SUPERELEVATED IN ACCORDANCE WITH STD. NO. 225.04 USING THE RATE OF SUPERELEVATION AND RUNOFF SHOWN ON THE PLANS. SUPERELEVATION IS TO BE REVOLVED ABOUT THE GRADE POINTS SHOWN ON THE TYPICAL SECTIONS.

SHOULDER CONSTRUCTION:

ASPHALT, EARTH, AND CONCRETE SHOULDER CONSTRUCTION ON THE HIGH SIDE OF SUPERELEVATED CURVES SHALL BE IN ACCORDANCE WITH STD. NO. 560.01.

GUARDRAIL:

THE GUARDRAIL LOCATIONS SHOWN ON THE PLANS MAY BE ADJUSTED DURING CONSTRUCTION AS DIRECTED BY THE ENGINEER. THE CONTRACTOR SHOULD CONSULT WITH THE ENGINEER PRIOR TO ORDERING GUARDRAIL MATERIAL.

RIGHT-OF-WAY MARKERS:

ALL RIGHT-OF-WAY MARKERS ON THIS PROJECT SHALL BE PLACED BY CONTRACT.

STANDARD DRAWINGS

2012 ROADWAY ENGLISH STANDARD DRAWINGS

The following Roadway Standards as appear in "Roadway Standard Drawings" Highway Design Branch - N. C. Department of Transportation - Raleigh, N. C., Dated January, 2012 are applicable to this project and by reference hereby are considered a part of these plans:

STD.NO.	TITLE
DIVISION 2 - EARTHWORK	
200.02	Method of Clearing - Method II
225.02	Guide for Grading Subgrade - Secondary and Local
225.04	Method of Obtaining Superelevation - Two Lane Pavement
DIVISION 5 - SUBGRADE, BASES AND SHOULDERS	
560.01	Method of Shoulder Construction - High Side of Superelevated Curve - Method I
DIVISION 8 - INCIDENTALS	
846.01	Concrete Curb, Gutter and Curb & Gutter
862.01	Guardrail Placement
862.02	Guardrail Installation
876.01	Rip Rap in Channels
876.02	Rip Rap at Pipe Outlets
876.04	Drainage Ditches with Class B Rip Rap
DIVISION 11 - WORK ZONE TRAFFIC CONTROL	
1110.01	Stationary Work Zone Signs - Mounting Height & Lateral Clearance
1145.01	Barricades - Type III
DIVISION 16 - EROSION CONTROL AND ROADSIDE DEVELOPMENT	
1605.01	Temporary Silt Fence
1622.01	Guide for Temporary Berms and Slope Drain
1630.02	Silt Basin Type B
1631.01	Matting Installation
1640.01	Coir Fiber Baffle

8/17/99
1/25/2013
K:\55335_Div10\030244\Roadway\Proj\B030244_Rdy_pshlA.dgn

04/16/11

PROJECT REFERENCE NO.	SHEET NO.
17BP.10.R.43	1-B

Note: Not to Scale

**S.U.E. = Subsurface Utility Engineering*

STATE OF NORTH CAROLINA
DIVISION OF HIGHWAYS

CONVENTIONAL PLAN SHEET SYMBOLS

BOUNDARIES AND PROPERTY:

- State Line
- County Line
- Township Line
- City Line
- Reservation Line
- Property Line
- Existing Iron Pin — EIP
- Property Corner
- Property Monument — ECM
- Parcel/Sequence Number — 123
- Existing Fence Line
- Proposed Woven Wire Fence
- Proposed Chain Link Fence
- Proposed Barbed Wire Fence
- Existing Wetland Boundary — WLB
- Proposed Wetland Boundary — WLB
- Existing Endangered Animal Boundary — EAB
- Existing Endangered Plant Boundary — EPB
- Known Soil Contamination: Area or Site
- Potential Soil Contamination: Area or Site

BUILDINGS AND OTHER CULTURE:

- Gas Pump Vent or U/G Tank Cap
- Sign — S
- Well — W
- Small Mine
- Foundation
- Area Outline
- Cemetery
- Building
- School
- Church
- Dam

HYDROLOGY:

- Stream or Body of Water
- Hydro, Pool or Reservoir
- Jurisdictional Stream — JS
- Buffer Zone 1 — BZ 1
- Buffer Zone 2 — BZ 2
- Flow Arrow
- Disappearing Stream
- Spring
- Wetland
- Proposed Lateral, Tail, Head Ditch — FLOW
- False Sump

RAILROADS:

- Standard Gauge — CSX TRANSPORTATION
- RR Signal Milepost — MILEPOST 35
- Switch — SWITCH
- RR Abandoned
- RR Dismantled

RIGHT OF WAY:

- Baseline Control Point
- Existing Right of Way Marker
- Existing Right of Way Line
- Proposed Right of Way Line — RW
- Proposed Right of Way Line with Iron Pin and Cap Marker — RW
- Proposed Right of Way Line with Concrete or Granite R/W Marker — RW
- Proposed Control of Access Line with Concrete C/A Marker — CA
- Existing Control of Access — CA
- Proposed Control of Access — CA
- Existing Easement Line — E
- Proposed Temporary Construction Easement — E
- Proposed Temporary Drainage Easement — TDE
- Proposed Permanent Drainage Easement — PDE
- Proposed Permanent Drainage / Utility Easement — DUE
- Proposed Permanent Utility Easement — PUE
- Proposed Temporary Utility Easement — TUE
- Proposed Aerial Utility Easement — AUE
- Proposed Permanent Easement with Iron Pin and Cap Marker

ROADS AND RELATED FEATURES:

- Existing Edge of Pavement
- Existing Curb
- Proposed Slope Stakes Cut — C
- Proposed Slope Stakes Fill — F
- Proposed Curb Ramp — CR
- Existing Metal Guardrail
- Proposed Guardrail
- Existing Cable Guiderail
- Proposed Cable Guiderail
- Equality Symbol
- Pavement Removal

VEGETATION:

- Single Tree
- Single Shrub
- Hedge
- Woods Line
- Orchard
- Vineyard — Vineyard

EXISTING STRUCTURES:

MAJOR:

- Bridge, Tunnel or Box Culvert — CONC
- Bridge Wing Wall, Head Wall and End Wall — CONC WW

MINOR:

- Head and End Wall — CONC HW
- Pipe Culvert
- Footbridge
- Drainage Box: Catch Basin, DI or JB — CB
- Paved Ditch Gutter
- Storm Sewer Manhole — S
- Storm Sewer — S

UTILITIES:

POWER:

- Existing Power Pole
- Proposed Power Pole
- Existing Joint Use Pole
- Proposed Joint Use Pole
- Power Manhole — P
- Power Line Tower
- Power Transformer
- U/G Power Cable Hand Hole
- H-Frame Pole
- Recorded U/G Power Line — P
- Designated U/G Power Line (S.U.E.*) — P

TELEPHONE:

- Existing Telephone Pole
- Proposed Telephone Pole
- Telephone Manhole — T
- Telephone Booth
- Telephone Pedestal — T
- Telephone Cell Tower
- U/G Telephone Cable Hand Hole — HH
- Recorded U/G Telephone Cable — T
- Designated U/G Telephone Cable (S.U.E.*) — T
- Recorded U/G Telephone Conduit — TC
- Designated U/G Telephone Conduit (S.U.E.*) — TC
- Recorded U/G Fiber Optics Cable — T FO
- Designated U/G Fiber Optics Cable (S.U.E.*) — T FO

WATER:

- Water Manhole — W
- Water Meter
- Water Valve
- Water Hydrant
- Recorded U/G Water Line — W
- Designated U/G Water Line (S.U.E.*) — W
- Above Ground Water Line — A/G Water

TV:

- TV Satellite Dish
- TV Pedestal — C
- TV Tower
- U/G TV Cable Hand Hole — HH
- Recorded U/G TV Cable — TV
- Designated U/G TV Cable (S.U.E.*) — TV
- Recorded U/G Fiber Optic Cable — TV FO
- Designated U/G Fiber Optic Cable (S.U.E.*) — TV FO

GAS:

- Gas Valve
- Gas Meter
- Recorded U/G Gas Line — G
- Designated U/G Gas Line (S.U.E.*) — G
- Above Ground Gas Line — A/G Gas

SANITARY SEWER:

- Sanitary Sewer Manhole
- Sanitary Sewer Cleanout
- U/G Sanitary Sewer Line — SS
- Above Ground Sanitary Sewer — A/G Sanitary Sewer
- Recorded SS Forced Main Line — FSS
- Designated SS Forced Main Line (S.U.E.*) — FSS

MISCELLANEOUS:

- Utility Pole
- Utility Pole with Base
- Utility Located Object
- Utility Traffic Signal Box — S
- Utility Unknown U/G Line — ?UTL
- U/G Tank; Water, Gas, Oil
- Underground Storage Tank, Approx. Loc. — UST
- A/G Tank; Water, Gas, Oil
- Geoenvironmental Boring
- U/G Test Hole (S.U.E.*)
- Abandoned According to Utility Records — AATUR
- End of Information — E.O.I.

PROJECT REFERENCE NO.	SHEET NO.
17BP.10.R.43	1C
Location and Surveys	

SURVEY CONTROL SHEET
PRELIMINARY PLANS

BL

POINT	DESC.	NORTH	EAST	ELEVATION	L244 STATION	OFFSET
1	BL-1	467234.6480	1654384.7180	252.06	11+97.84	17.90 LT
2	BL-2	467448.5540	1654307.6790	240.85	14+26.85	4.62 RT
3	BL-3	467636.5960	1654184.5720	244.76	16+50.51	17.56 LT

DATUM DESCRIPTION

THE LOCALIZED COORDINATE SYSTEM DEVELOPED FOR THIS PROJECT IS BASED ON THE STATE PLANE COORDINATES ESTABLISHED BY NCDOT FOR MONUMENT "03-0244_BL-2"
WITH NAD 83/NSRS 2007 STATE PLANE GRID COORDINATES OF
NORTHING: 467448.554(ft) EASTING: 1654307.679(ft)
ELEVATION: 240.85(ft)
THE AVERAGE COMBINED GRID FACTOR USED ON THIS PROJECT (GROUND TO GRID) IS: 0.99980
THE N.C. LAMBERT GRID BEARING AND LOCALIZED HORIZONTAL GROUND DISTANCE FROM "03-0244_BL-2" TO -L- STATION 10+00.00 IS S16°03'58.7"E 420.57'
ALL LINEAR DIMENSIONS ARE LOCALIZED HORIZONTAL DISTANCES
VERTICAL DATUM USED IS NAVD 88

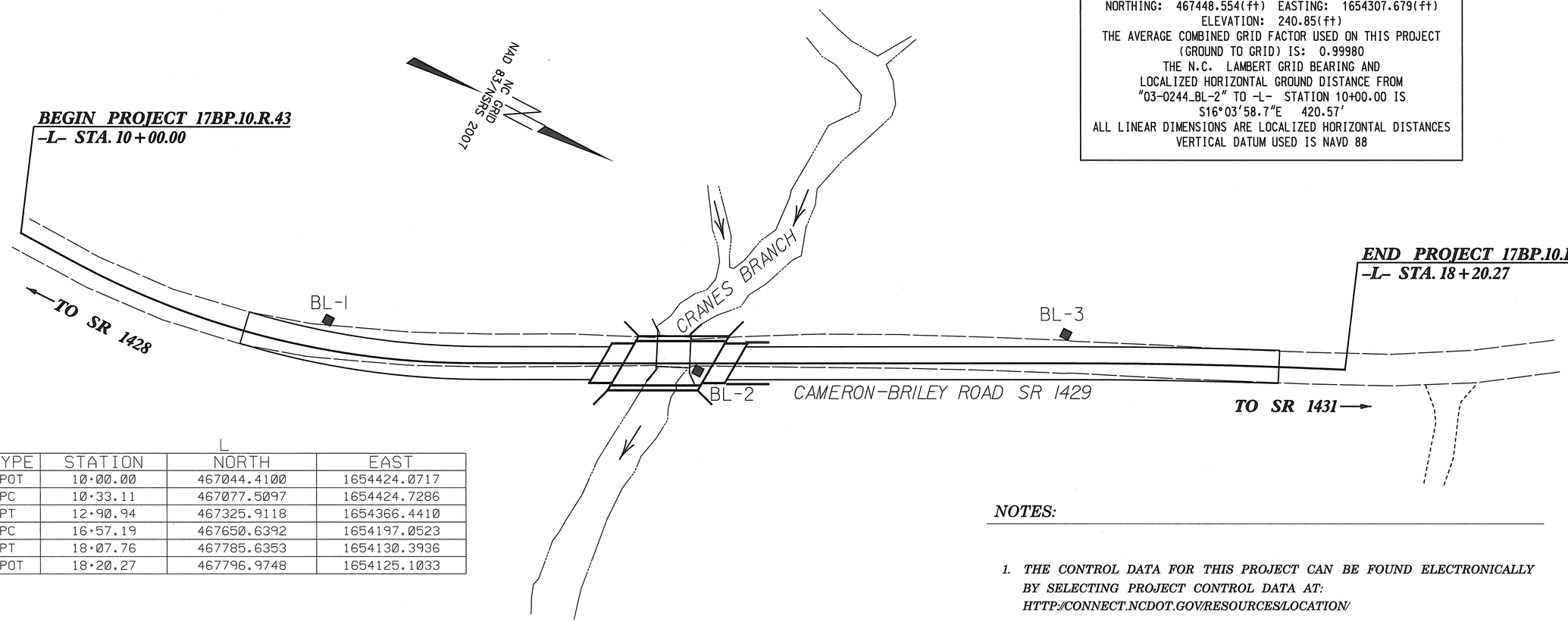

L

TYPE	STATION	NORTH	EAST
POT	10+00.00	467044.4100	1654424.0717
PC	10+33.11	467077.5097	1654424.7286
PT	12+90.94	467325.9118	1654366.4410
PC	16+57.19	467650.6392	1654197.0523
PT	18+07.76	467785.6353	1654130.3936
POT	18+20.27	467796.9748	1654125.1033

PERMANENT EASEMENT MARKER

ALIGN	STATION	OFFSET	NORTH	EAST
L	11+85.27	26.33	467235.0480	1654430.7283
L	12+00.27	29.12	467250.9923	1654428.8786
L	12+70.03	28.26	467319.2239	1654401.2984
L	12+96.79	30.78	467345.3344	1654391.0255
L	13+48.48	40.78	467395.7889	1654375.9855
L	13+74.68	49.97	467423.2687	1654372.0163
L	14+50.17	45.33	467488.0539	1654332.9888
L	15+04.43	35.64	467531.6806	1654299.3026
L	15+04.43	35.64	467531.6831	1654299.3010
L	16+03.30	32.70	467617.9813	1654250.9693
L	17+23.24	33.26	467724.2992	1654196.8584
L	17+33.96	29.21	467732.0203	1654188.5155

NOTES:

1. *THE CONTROL DATA FOR THIS PROJECT CAN BE FOUND ELECTRONICALLY BY SELECTING PROJECT CONTROL DATA AT: HTTP:/CONNECT.NCDOT.GOV/RESOURCES/LOCATION/*

   THE FILES TO BE FOUND ARE AS FOLLOWS: 030244_LS_CONTROL.TXT

2. *SITE CALIBRATION INFORMATION HAS NOT BEEN PROVIDED FOR THIS PROJECT. IF FURTHER INFORMATION IS NEEDED, PLEASE CONTACT THE LOCATION AND SURVEYS UNIT.*

3. *PROJECT CONTROL ESTABLISHED USING GLOBAL POSITIONING SYSTEM. POSITIONS ESTABLISHED USING NCGS REAL TIME KINEMATIC NETWORK (VRS)*

   MONUMENTS USED OR SET FOR PROJECT CONTROL BY THE NCDOT LOCATION AND SURVEYS UNIT:

- ● *INDICATES GEODETIC CONTROL MONUMENTS FOR HORIZONTAL CONTROL*
- ■ *INDICATES BASELINE MONUMENTS FOR HORIZONTAL PROJECT CONTROL*
- ⊠ *INDICATES BENCHMARKS FOR VERTICAL PROJECT CONTROL*

NOTE: DRAWING NOT TO SCALE

12/12/12 TBL
1/25/2013
K:\55335_Div10\030244\Roadway\Proj\030244_ls_lc.dgn

PROJECT REFERENCE NO.	SHEET NO.
17BP.10.R.43	2

ROADWAY DESIGN ENGINEER

NORTH CAROLINA PROFESSIONAL SEAL 15444 ENGINEER ALISON C. JOHNSON

(SEAL) 4/19/13

PAVEMENT DESIGN ENGINEER

NORTH CAROLINA PROFESSIONAL SEAL 21656 ENGINEER ROGER S. WEADON

4/19/13

Gannett Fleming

301 S. McDOWELL STREET, SUITE 1008
CHARLOTTE, NORTH CAROLINA 28204-2644

NC Lic. No. F-0270

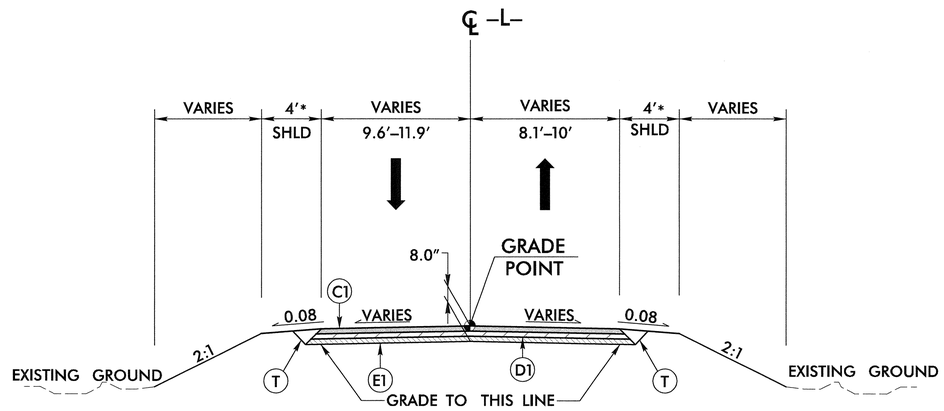

TYPICAL SECTION NO. 1

-L- STA. 11+48.23 TO STA. 18+00.00

* NOTE: SEE PLAN FOR SUPER ELEVATION RATES AND TRANSITIONS
7'-0" WITH GUARDRAIL

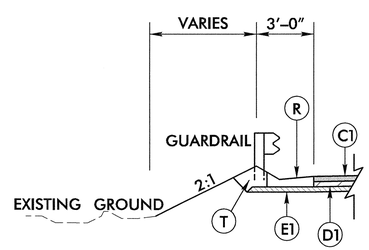

DETAIL A - SHOULDER BERM GUTTER

-L- STA. 14+52.78 TO STA. 14+83.60 LT ⚠1

-L- STA. 14+69.62 TO STA. 14+83.60 RT ⚠1

PAVEMENT SCHEDULE	
ITEM	DESCRIPTION
C1	PROP. APPROX. 1.5" ASPHALT CONCRETE SURFACE COURSE, TYPE S9.5B, AT AN AVERAGE RATE OF 168 LBS. PER SQ. YD.
D1	PROP. APPROX. 3.5" ASPHALT CONCRETE INTERMEDIATE COURSE, TYPE I19.0B, AT AN AVERAGE RATE OF 399 LBS. PER SQ. YD.
E1	PROP. APPROX. 3" ASPHALT CONCRETE BASE COURSE, TYPE B25.0B, AT AN AVERAGE RATE OF 342 LBS. PER SQ. YD.
R	SHOULDER BERM GUTTER
T	EARTH MATERIAL

NOTE: PAVEMENT EDGE SLOPES ARE 1:1 UNLESS SHOWN OTHERWISE

REVISIONS

REVISION	DATE	DESCRIPTION	APPROVED
1	4/19/13	REVISED SHOULDER BERM GUTTER	ACJ

6/2/99

4/19/2013
K:\55335_Divi0\030244\Roadway\Proj\B030244_Rdy_typ.dgn

COMPUTED BY:	CLL	DATE:	9/12/12
CHECKED BY:	ACJ	DATE:	9/12/12

STATE OF NORTH CAROLINA
DIVISION OF HIGHWAYS

PROJECT REFERENCE NO.	SHEET NO.
17BP.10.R.43	3
RW SHEET NO.	
ROADWAY DESIGN ENGINEER	HYDRAULICS ENGINEER
NORTH CAROLINA PROFESSIONAL ENGINEER SEAL 15424 ALLISON C. JOHNSON 4/19/13	NORTH CAROLINA PROFESSIONAL ENGINEER SEAL 21656 ROGER S. WEADON 4/19/13

Gannett Fleming
301 S. McDOWELL STREET, SUITE 1008
CHARLOTTE, NORTH CAROLINA 28204-2644
NC Lic. No. F-0270

REVISIONS

REVISION	DATE	DESCRIPTION	APPROVED
1	4/10/13	REVISED STANDARD NUMBER	ACJ
2	4/10/13	CHANGED FROM DRAINAGE PIPE TO RCP	ACJ
3	4/19/13	RELOCATED DRAINAGE STRUCTURES	ACJ
4	4/19/13	REVISED GUARDRAIL	ACJ

12/06/07

RIGHT OF WAY AREA DATA

PARCEL NO.	PROPERTY OWNERS NAMES	TOTAL ACREAGE	AREA TAKEN	AREA REMAINING RT.	AREA REMAINING LT.	CONST. EASE.	PERM. DRAIN. EASE.	TEMP. DRAIN. EASE.	DUAL UTILITY EASE.
1	ELOISE BRILEY HEIRS	351.33 AC					6,546 SF		

SUMMARY OF EARTHWORK
(in Cubic Yards)

STATION	STATION	UNCL. EXCAV.	EMBANK. +%	BORROW	WASTE
11+48.23	18+00.00	312	288		24
PROJECT TOTALS:		312	288		24
ESTIMATE 5% FOR TOPSOIL ON BORROW PITS					
GRAND TOTALS:		312	288		24
SAY:					30

Earthwork quantities are calculated by the Roadway Design Unit. These earthwork quantities are based in part on subsurface data provided by the Geotechnical Engineering Unit.

Approximate quantities only. Unclassified Excavation, Borrow Excavation, Shoulder Borrow, Fine Grading, Clearing and Grubbing, Breaking of Existing Pavement, and Removal of Existing Pavement will be paid for at the contract lump sum price for "Grading".

"N" = DISTANCE FROM EDGE OF LANE TO FACE OF GUARDRAIL.
TOTAL SHOULDER WIDTH = DISTANCE FROM EDGE OF TRAVEL LANE TO SHOULDER BREAK POINT.
FLARE LENGTH = DISTANCE FROM LAST SECTION OF PARALLEL GUARDRAIL TO END OF GUARDRAIL.
W = TOTAL WIDTH OF FLARE FROM BEGINNING OF TAPER TO END OF GUARDRAIL.
G = GATING IMPACT ATTENUATOR TYPE 350
NG = NON-GATING IMPACT ATTENUATOR TYPE 350

GUARDRAIL SUMMARY

SURVEY LINE	BEG. STA.	END STA.	LOCATION	LENGTH STRAIGHT	LENGTH SHOP CURVED	LENGTH DOUBLE FACED	WARRANT POINT APPROACH END	WARRANT POINT TRAILING END	"N" DIST. FROM E.O.L.	TOTAL SHOUL. WIDTH	FLARE LENGTH APPROACH END	FLARE LENGTH TRAILING END	W APPROACH END	W TRAILING END
-L-	13+01.50	13+89.00	LT	87.5				13+89.00	4	7	50	50		1.0
-L-	12+85.91	13+73.41	RT	87.5			13+73.41		4	7	50	50		1.0
-L-	14+44.00	15+44.00	LT	100			14+44.00		4	7	50	50		1.0
-L-	14+28.41	15+28.41	RT	100	4			14+28.41	4	7	50	50		1.0
			TOTAL:	375										
			TOTAL ANCHOR LENGTH:	275										
			TOTAL GUARDRAIL LENGTH	100										
			SAY:	100										

SURVEY LINE	BEG. STA.	ANCHORS XI MOD	XI	GRAU 350	M-350	TYPE III	CAT-1	VI MOD	BIC	AT-1	IMPACT ATTENUATOR TYPE 350 EA	G	NG	SINGLE FACED GUARDRAIL	REMOVE EXISTING GUARDRAIL	REMOVE AND STOCKPILE EXISTING GUARDRAIL	REMARKS
-L-	13+01.50			1		1											
-L-	12+85.91			1		1											
-L-	14+44.00			1		1											
-L-	14+28.41			1		1											
TOTAL:				4		4											

LIST OF PIPES, ENDWALLS, ETC. (FOR PIPES 48" & UNDER)

STATION	LOCATION (LT,RT, OR CL)	STRUCTURE NO. FROM	STRUCTURE NO. TO	TOP ELEVATION	INVERT ELEVATION	INVERT ELEVATION	SLOPE CRITICAL
3 -L- 14+81.51	LT	0401		241.0			
		IN	OUT		238.3	237.0	6.00
3 -L- 14+81.79	RT	0402		241.0			
		IN	OUT		237.0	235.1	9.50

STATION	DRAINAGE PIPE (RCP, CSP, CAAP, HDPE, or PVC) 12"	15"	18"	24"	30"	36"	42"	48"	DO NOT USE RCP	DO NOT USE CSP	DO NOT USE CAAP	DO NOT USE HDPE	C.S. PIPE 12" (.064)	15" (.064)	18" (.064)	24" (.064)	36" (.079)	42" (.109)	48" (.109)
3 -L- 14+81.51																			
3 -L- 14+81.79																			

STATION	R.C. PIPE (CLASS III) 15"	18"	24"	30"	36"	42"	48"	R.C. PIPE (CLASS IV) 12"	15"	18"	24"	30"	36"	42"	48"
3 -L- 14+81.51															
	20														
3 -L- 14+81.79															
	20 2														

STATION	**" R. C. PIPE (CLASS V)	**" R. C. PIPE CULVERTS, CONTRACTOR DESIGN PIPE	**" R. C. PIPE CULVERTS, CONTRACTOR DESIGN PIPE	15" SIDE DRAIN PIPE	18" SIDE DRAIN PIPE	ENDWALLS STD. 838.01, STD. 838.11 OR STD. 838.80 (UNLESS NOTED OTHERWISE) CU. YDS. R.C.P.	C.S.P.	QUANTITIES FOR DRAINAGE STRUCTURES * TOTAL L.F. FOR PAY QUANTITY SHALL BE COL. 'A' + (1.3 X COL.'B') PER EACH (0' THRU 5.0')	LIN. *FT. A 5.0' THRU 10.0'	B 10.0' AND ABOVE	C.B. STD. 840.01 OR STD. 840.02	FRAME, GRATES AND HOOD STANDARD 840.03 TYPE OF GRATE E	F	G		CONCRETE TRANSITIONAL SECTION CATCH BASIN	DROP INLET		G.D.I. FRAME WITH GRATE STD. 840.22	1 G.D.I. FRAME WITH TWO GRATES STD. 840.29	G.D.I. (N.S.) FRAME WITH GRATE STD. 840.24	G.D.I. (N.S.) FRAME WITH TWO GRATES STD. 840.24	T.B.D.I. STD. 840.35	CORR. STEEL ELBOWS NO. & SIZE	CONC. COLLARS CL. "B" C.Y. STD 840.72	CONC. & BRICK PIPE PLUG, C.Y. STD. 840.71	PIPE REMOVAL LIN.FT.	REMARKS
3 -L- 14+81.51								1												1			1					
3 -L- 14+81.79								1												1			1					

ABBREVIATIONS

C.B.	CATCH BASIN
N.D.I.	NARROW DROP INLET
D.I.	DROP INLET
G.D.I.	GRATED DROP INLET
G.D.I. (N.S.)	GRATED DROP INLET (NARROW SLOT)
J.B.	JUNCTION BOX
M.H.	MANHOLE
T.B.D.I.	TRAFFIC BEARING DROP INLET
T.B.J.B.	TRAFFIC BEARING JUNCTION BOX

4/19/2013
K:\5535_Div10\030244\Roadway\Proj\B030244_Rdy_sum_3.dgn

PROJECT REFERENCE NO.	SHEET NO.
17BP.10.R.43	4
R/W SHEET NO.	

ROADWAY DESIGN ENGINEER: SEAL 054243

HYDRAULICS ENGINEER: SEAL 21656, 4/19/13

Gannett Fleming
301 S. McDOWELL STREET, SUITE 1008
CHARLOTTE, NORTH CAROLINA 28204-2644
NC Lic. No. F-0270

REVISIONS			
REVISION	DESCRIPTION	DATE	APPROVED
1	REVISED APPROACH SLAB AND DRAINAGE	4/19/13	ACJ

8/17/99

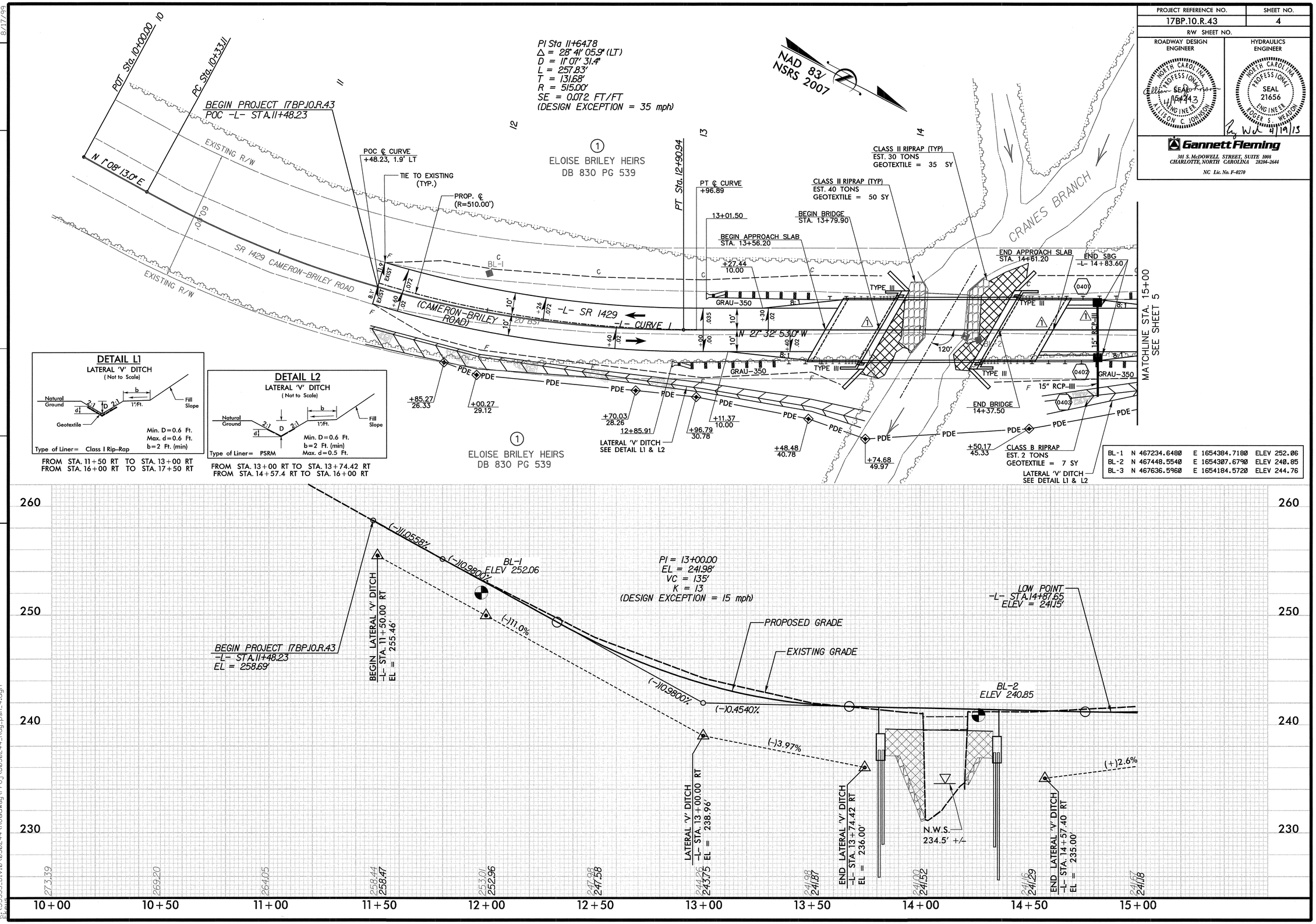

K:\55335_Div10\030244\Roadway\Proj\B030244_Rdy_psh_4.dgn

PROJECT REFERENCE NO.	SHEET NO.
17BP.10.R.43	5
R/W SHEET NO.	

ROADWAY DESIGN ENGINEER — NORTH CAROLINA PROFESSIONAL SEAL 019243 ENGINEER WILSON C JOHNSON

HYDRAULICS ENGINEER — NORTH CAROLINA PROFESSIONAL SEAL 21656 ENGINEER ROGER S WENDON — 4/19/13

Gannett Fleming
301 S. McDOWELL STREET, SUITE 1008
CHARLOTTE, NORTH CAROLINA 28204-2644
NC Lic. No. F-0270

REVISIONS			
REVISION	DATE	DESCRIPTION	APPROVED
1	4/19/13	REVISED GUARDRAIL	ACJ

8/17/99

DETAIL L1
LATERAL 'V' DITCH
(Not to Scale)

FROM STA. 11+50 RT TO STA. 13+00 RT
FROM STA. 16+00 RT TO STA. 17+50 RT

DETAIL L2
LATERAL 'V' DITCH
(Not to Scale)

FROM STA. 13+00 RT TO STA. 13+74.42 RT
FROM STA. 14+57.4 RT TO STA. 16+00 RT

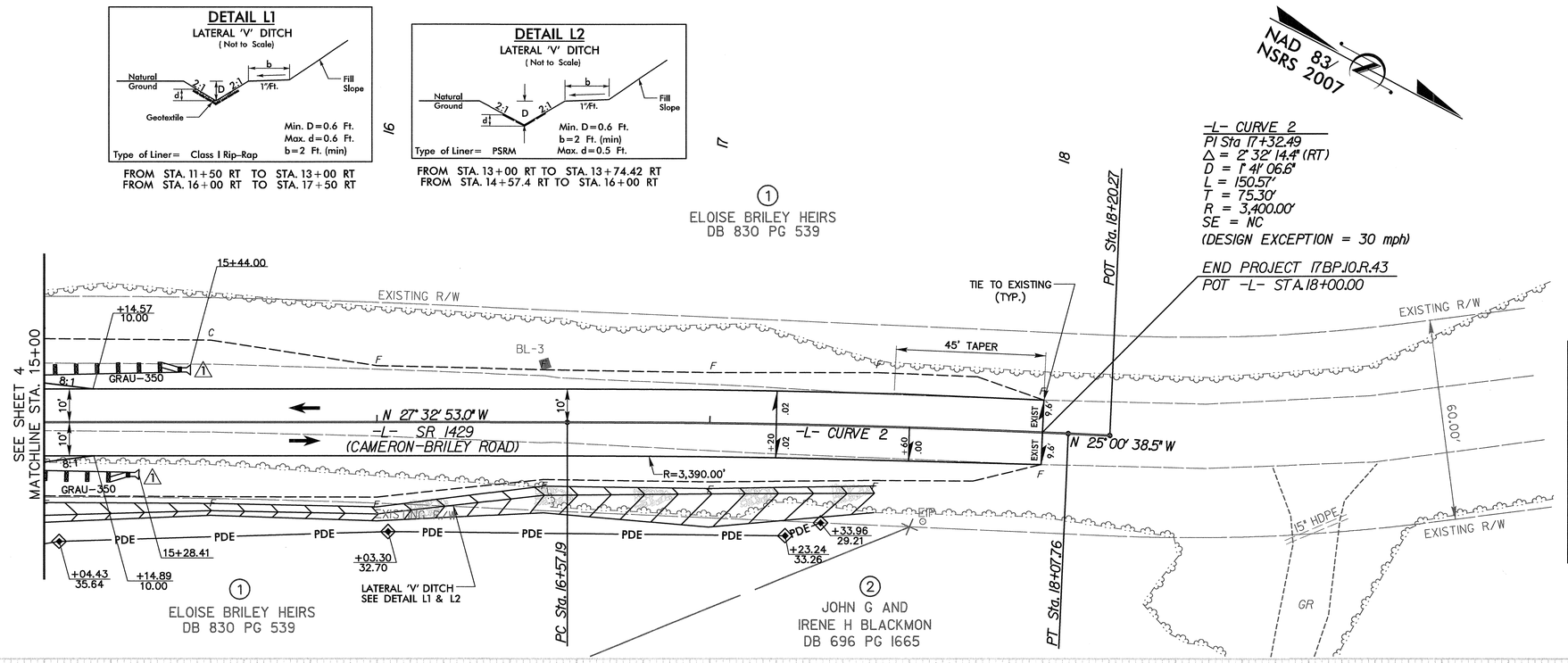

DATUM DESCRIPTION

THE LOCALIZED COORDINATE SYSTEM DEVELOPED FOR THIS PROJECT IS BASED ON THE STATE PLANE COORDINATES ESTABLISHED BY NCDOT FOR MONUMENT "03-0244_BL-2"
WITH NAD 83/NSRS 2007 STATE PLANE GRID COORDINATES OF
NORTHING: 467448.554(ft) EASTING: 1654307.679(ft)
ELEVATION: 240.85(ft)
THE AVERAGE COMBINED GRID FACTOR USED ON THIS PROJECT (GROUND TO GRID) IS: 0.99980
THE N.C. LAMBERT GRID BEARING AND LOCALIZED HORIZONTAL GROUND DISTANCE FROM "03-0244_BL-2" TO -L- STATION 10+00.00 IS
S16°03'58.7"E 420.57'
ALL LINEAR DIMENSIONS ARE LOCALIZED HORIZONTAL DISTANCES
VERTICAL DATUM USED IS NAVD 88

BL-1	N 467234.6480	E 1654384.7180	ELEV 252.06
BL-2	N 467448.5540	E 1654307.6790	ELEV 240.85
BL-3	N 467636.5960	E 1654184.5720	ELEV 244.76

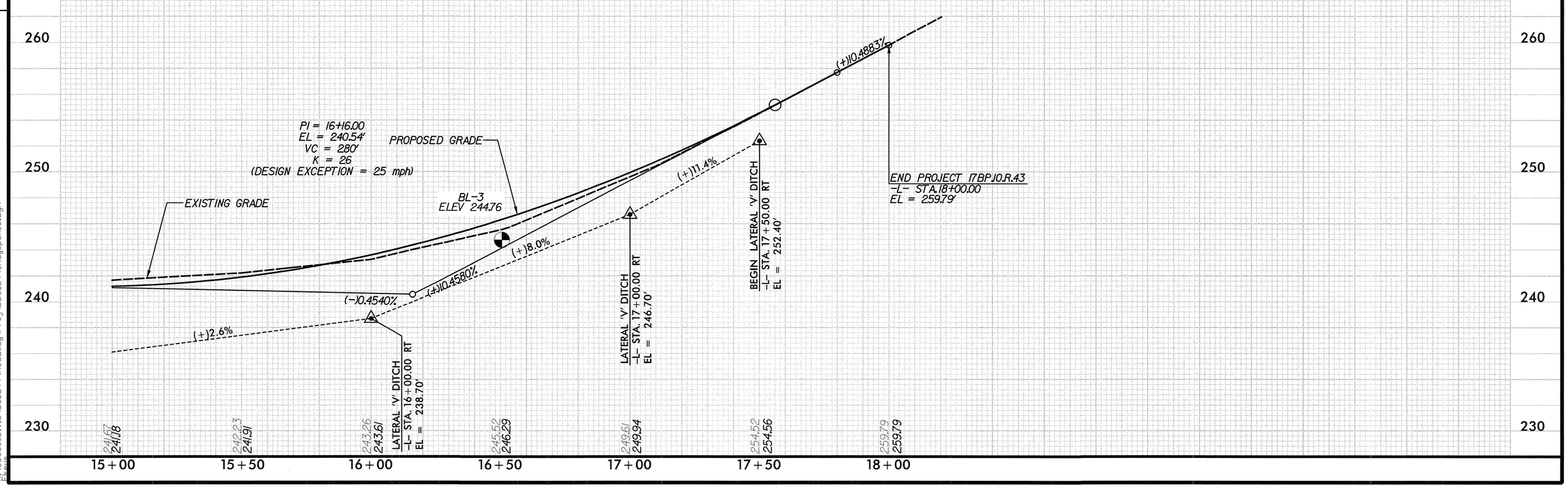

4/19/2013
S:\55335_Div10\030244\Roadway\Proj\B030244_Rdy_psh_5.dgn

PROJECT REFERENCE NO.	SHEET NO.
17BP.10.R.43	TCP-1
R/W SHEET NO.	
ROADWAY DESIGN ENGINEER	HYDRAULICS ENGINEER

NORTH CAROLINA PROFESSIONAL SEAL 15421 ENGINEER ALLISON C. JOHNSON
SEAL
1/25/13

DETOUR ROUTE

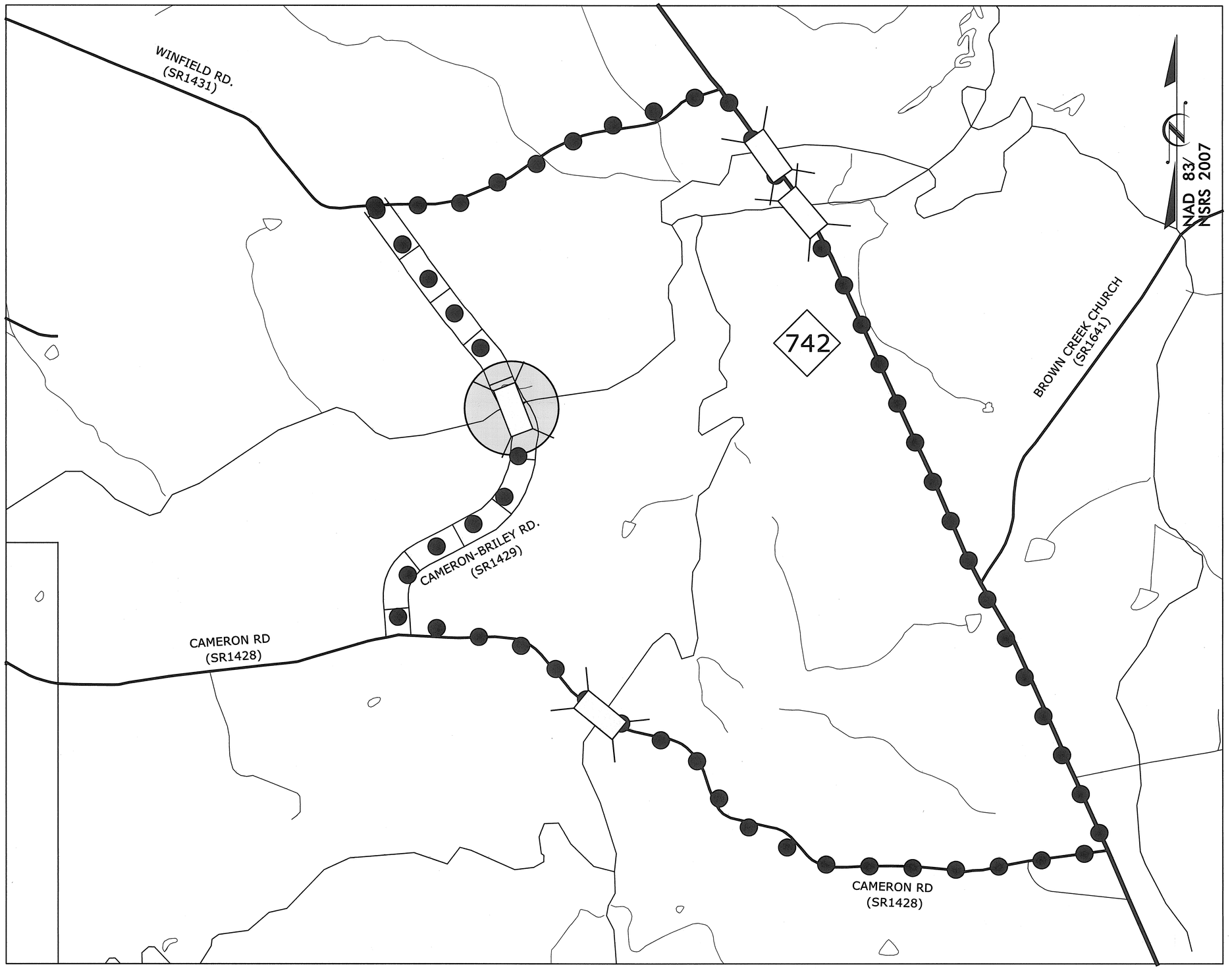

REVISIONS

8/17/99

1/25/2013
k:\5535_Div10\030244\Traffic\TrafficControl\TCP\B030244_TC_TCP_1.dgn

STATE	PROJECT NO.	SHEET NO.	TOTAL SHEETS
N.C.	17BP.10.R.43	TCP-2	
F.A. PROJECT NO.			

NOTE: USE SIGN R11-4 IF 1 MILE OR LESS TO ROAD CLOSURE.

NOTE: WING BARRICADES WITH SIGN R11-3 SHOULD ALSO BE USED AT SIDE ROADS BETWEEN THE DETOUR POINT AND THE POINT OF CLOSURE.

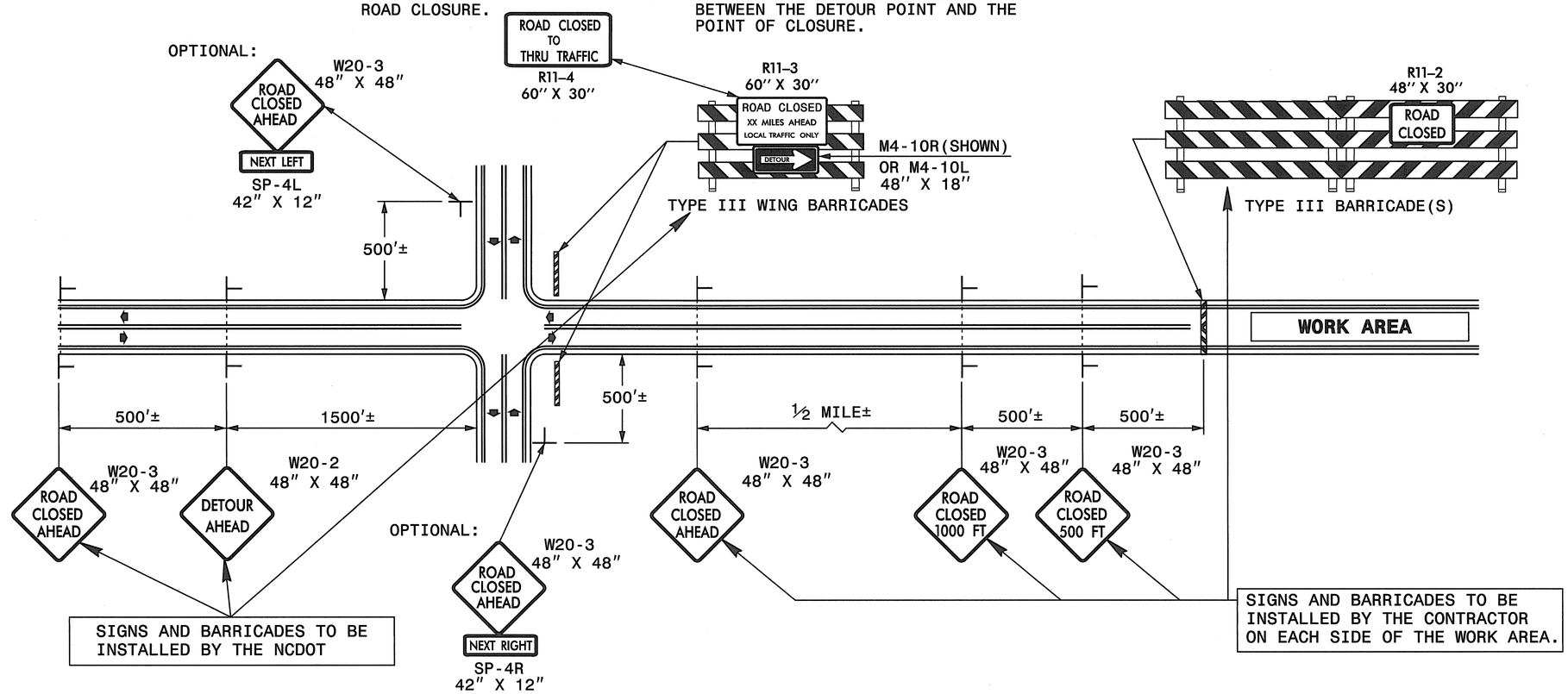

GENERAL NOTES

1-IF NECESSARY USE THIS STD. FOR TWO-LANE, TWO-WAY, AND MULTILANE DIVIDED AND UNDIVIDED ROADWAYS.

2-INSTALLATION OF DETOUR ROUTING PANELS, TEMPORARY ROUTE MARKERS, DESTINATION SIGNS, AND ANY NECESSARY MODIFICATIONS TO EXISTING OR PROPOSED REGULATORY OR WARNING SIGNS WILL BE MADE BY NCDOT FORCES UNLESS OTHERWISE DESIGNATED IN THE PLANS. PROVIDE A MINIMUM 21 CALENDAR DAY NOTICE TO STATE FORCES BEFORE A ROADWAY IS CLOSED TO TRAFFIC SUCH THAT THE NECESSARY PROVISIONS CAN BE MADE TO INSTALL DETOUR ROUTE SIGNS, INFORM LOCAL EMERGENCY AND LAW ENFORCEMENT PERSONNEL, SCHOOLS, OR ANY OTHER PARTIES AFFECTED BY THE ROAD CLOSURE.

3-INSTALL SIGNS BEFORE THE BARRICADES WHEN CLOSING THE ROADWAY TO TRAFFIC. REMOVE BARRICADES BEFORE SIGNS WHEN OPENING THE ROADWAY TO TRAFFIC. INSTALL/REMOVE SIGNS AND BARRICADES WITHIN THE SAME CALENDAR DAY.

4-USE ADDITIONAL TYPE III BARRICADES IN STAGGERED LOCATIONS SUPPLEMENTED WITH SIGN R11-4 "ROAD CLOSED TO THRU TRAFFIC" IN THE EVENT THAT TRAFFIC MUST BE MAINTAINED BEYOND THE DETOUR POINT.

5-DO NOT DISPLAY FRACTIONS OR DECIMALS ON SIGN R11-3 "ROAD CLOSED XX MILES AHEAD".

6-POSITION WING BARRICADES ON THE SHOULDERS AND SLOPE THE STRIPES DOWNWARD IN THE DIRECTION TOWARD WHICH TRAFFIC MUST TURN IN DETOURING.

7-USE PORTABLE SIGNS IF ROAD CLOSURE IS TO BE IMPLEMENTED FOR LESS THAN ONE DAY OR FOR EMERGENCIES.

LEGEND

- STATIONARY SIGN
- DIRECTION OF TRAFFIC FLOW

TEMPORARY ROAD CLOSURE
CLOSURE BEYOND DETOUR POINT

		REVISIONS	
SCALE	-NA-		
DATE	1-19-10		
DWG. BY	TWB		
APPROVED	RWB		

REVISIONS

8/17/99

1/25/2013
K:\55335_Div10\030244\Traffic\TrafficControl\TCP\B030244_TC_TCP_2.dgn

TIP PROJECT: 17BP.10.R.43

STATE	STATE PROJECT REFERENCE NO.	SHEET NO.	TOTAL SHEETS
N.C.	17BP.10.R.43	EC-1	

STATE PROJ. NO.	F. A. PROJ. NO.	DESCRIPTION

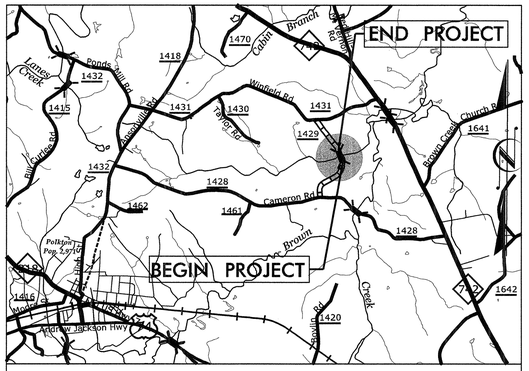

VICINITY MAP

N.T.S.

STATE OF NORTH CAROLINA
DIVISION OF HIGHWAYS

PLAN FOR PROPOSED
HIGHWAY EROSION CONTROL

ANSON COUNTY

LOCATION: BRIDGE #030244 OVER CRAVES BRANCH ON SR 1429 (CAMERON–BRILEY ROAD)

NAD 83/ NSRS 2007

TYPE OF WORK: PAVING, GRADING, DRAINAGE & STRUCTURE

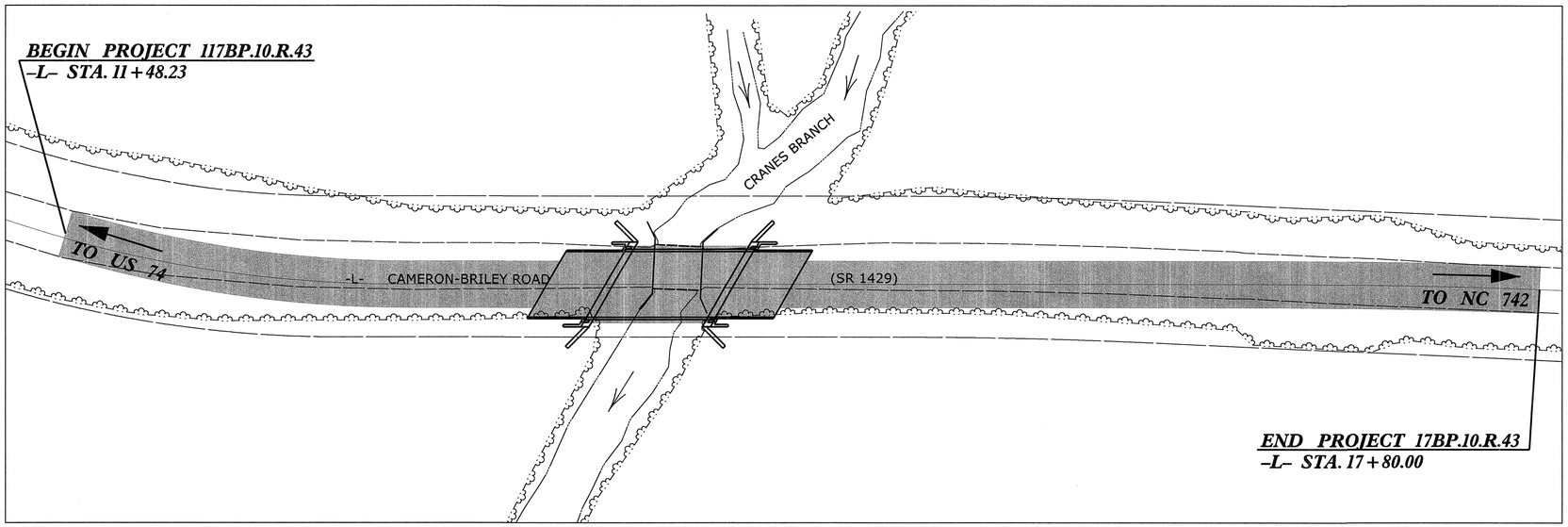

EROSION AND SEDIMENT CONTROL MEASURES

Std. #	Description	Symbol
1630.03	Temporary Silt Ditch	TSD
1630.05	Temporary Diversion	TD
1605.01	Temporary Silt Fence	
1606.01	Special Sediment Control Fence	
1622.01	Temporary Berms and Slope Drains	
1630.02	Silt Basin Type B	
1633.01	Temporary Rock Silt Check Type-A	
	Temporary Rock Silt Check Type-A with Matting and Polyacrylamide (PAM)	
1633.02	Temporary Rock Silt Check Type-B	
	Wattle / Coir Fiber Wattle	CW
	Wattle / Coir Fiber Wattle with Polyacrylamide (PAM)	
1634.01	Temporary Rock Sediment Dam Type-A	
1634.02	Temporary Rock Sediment Dam Type-B	
1635.01	Rock Pipe Inlet Sediment Trap Type-A	
1635.02	Rock Pipe Inlet Sediment Trap Type-B	
1630.04	Stilling Basin	
1630.06	Special Stilling Basin	
	Rock Inlet Sediment Trap:	
1632.01	Type A	A
1632.02	Type B	B
1632.03	Type C	C
	Skimmer Basin	
	Tiered Skimmer Basin	
	Infiltration Basin	

THIS PROJECT CONTAINS EROSION CONTROL PLANS FOR CLEARING AND GRUBBING PHASE OF CONSTRUCTION.

ROGER WEADON, P.E.
LEVEL IIIA NAME

619
LEVEL IIIA CERTIFICATION NO.

GRAPHIC SCALE

0
PLANS

0
PROFILE (HORIZONTAL)

0
PROFILE (VERTICAL)

ROADSIDE ENVIRONMENTAL UNIT
DIVISION OF HIGHWAYS
STATE OF NORTH CAROLINA

NORTH CAROLINA PROFESSIONAL SEAL 21656 ENGINEER ROGER S. WEADON

4/19/13

THESE EROSION AND SEDIMENT CONTROL PLANS COMPLY WITH THE REGULATIONS SET FORTH BY THE NCG-010000 GENERAL CONSTRUCTION PERMIT EFFECTIVE AUGUST 3, 2011 ISSUED BY THE NORTH CAROLINA DEPARTMENT OF ENVIRONMENT AND NATURAL RESOURCES DIVISION OF WATER QUALITY.

Prepared In the Office of:

ROADSIDE ENVIRONMENTAL UNIT

1 South Wilmington St.
Raleigh, NC 27611

2012 STANDARD SPECIFICATIONS

Roadway Standard Drawings

The following roadway english standards as appear in "Roadway Standard Drawings"– Roadway Design Unit – N. C. Department of Transportation – Raleigh, N. C., dated January 2012 and the latest revison thereto are applicable to this project and by reference hereby are considered a part of these plans.

1604.01	Railroad Erosion Control Detail	1632.01	Rock Inlet Sediment Trap Type A
1605.01	Temporary Silt Fence	1632.02	Rock Inlet Sediment Trap Type B
1606.01	Special Sediment Control Fence	1632.03	Rock Inlet Sediment Trap Type C
1607.01	Gravel Construction Entrance	1633.01	Temporary Rock Silt Check Type A
1622.01	Temporary Berms and Slope Drains	1633.02	Temporary Rock Silt Check Type B
1630.01	Riser Basin	1634.01	Temporary Rock Sediment Dam Type A
1630.02	Silt Basin Type B	1634.02	Temporary Rock Sediment Dam Type B
1630.03	Temporary Silt Ditch	1635.01	Rock Pipe Inlet Sediment Trap Type A
1630.04	Stilling Basin	1635.02	Rock Pipe Inlet Sediment Trap Type B
1630.05	Temporary Diversion	1640.01	Coir Fiber Baffle
1630.06	Special Stilling Basin	1645.01	Temporary Stream Crossing
1631.01	Matting Installation		

R:\HydroEng\ 4/19/2013 2:31:11 PM EC CADD\030244_EC_tsh.dgn

PROJECT REFERENCE NO.	SHEET NO.
17BP.10.R.43	EC-3A
R/W SHEET NO.	

MA Engineering CONSULTANTS, INC.
598 East Chatham Street Suite 137 Cary, NC 27511
Phone: 919.297.0220 Fax: 919.297.0221

DIVISION OF HIGHWAYS
STATE OF NORTH CAROLINA

SOIL STABILIZATION TIMEFRAMES

SITE DESCRIPTION	STABILIZATION TIME	TIMEFRAME EXCEPTIONS
PERIMETER DIKES, SWALES, DITCHES AND SLOPES	7 DAYS	NONE
HIGH QUALITY WATER (HQW) ZONES	7 DAYS	NONE
SLOPES STEEPER THAN 3:1	7 DAYS	IF SLOPES ARE 10' OR LESS IN LENGTH AND ARE NOT STEEPER THAN 2:1, 14 DAYS ARE ALLOWED.
SLOPES 3:1 OR FLATTER	14 DAYS	7 DAYS FOR SLOPES GREATER THAN 50' IN LENGTH.
ALL OTHER AREAS WITH SLOPES FLATTER THAN 4:1	14 DAYS	NONE, EXCEPT FOR PERIMETERS AND HQW ZONES.

PROJECT REFERENCE NO.	SHEET NO.
17BP.10.R.43	EC-3

DIVISION OF HIGHWAYS
STATE OF NORTH CAROLINA

SOIL STABILIZATION SUMMARY SHEET

MATTING FOR EROSION CONTROL

CONST SHEET NO.	LINE	FROM STATION	TO STATION	SIDE	ESTIMATE (SY)
4	L	1300	1375	RT	20
4	L	1460	1600	RT	55
			SUBTOTAL		75
MISCELLANEOUS MATTING TO BE INSTALLED AS DIRECTED BY THE ENGINEER					1745
				TOTAL	1820
				SAY	1850

PERMANENT SOIL REINFORCEMENT MAT

CONST SHEET NO.	LINE	FROM STATION	TO STATION	SIDE	ESTIMATE (SY)
			SUBTOTAL		0
		ADDITIONAL PSRM TO BE INSTALLED			0
				TOTAL	0
				SAY	0

PROJECT REFERENCE NO.	SHEET NO.
17BP.10.R.43	EC-2
R/W SHEET NO.	

WATTLE WITH POLYACRYLAMIDE (PAM) DETAIL

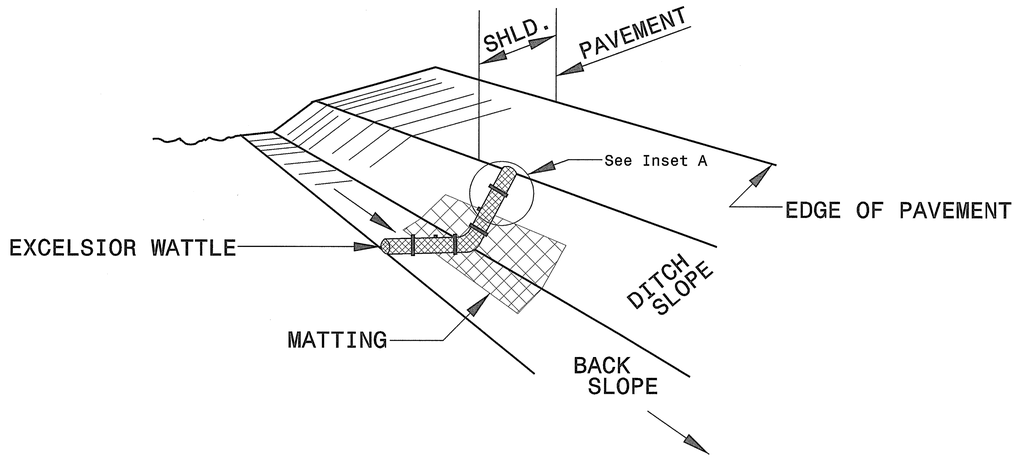

ISOMETRIC VIEW

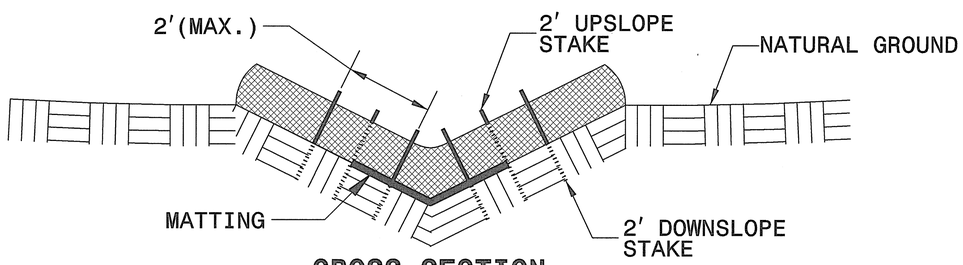

CROSS SECTION
VEE DITCH

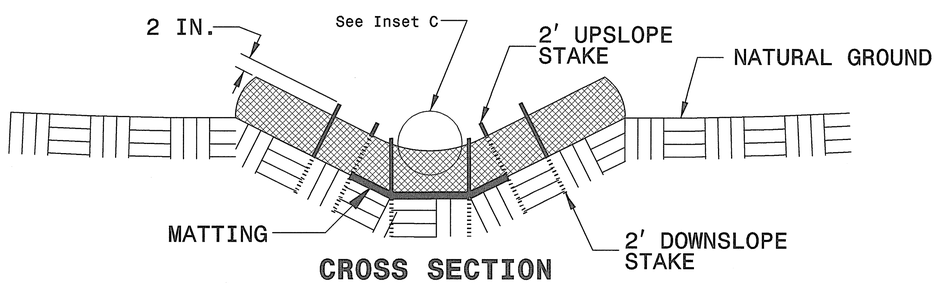

CROSS SECTION
TRAPEZOIDAL DITCH

NOTES:

USE MINIMUM 12 IN. DIAMETER EXCELSIOR WATTLE.

USE 2 FT. WOODEN STAKES WITH A 2 IN. BY 2 IN. NOMINAL CROSS SECTION.

ONLY INSTALL WATTLE(S) TO A HEIGHT IN DITCH SO FLOW WILL NOT WASH AROUND WATTLE AND SCOUR DITCH SLOPES AND AS DIRECTED.

INSTALL A MINIMUM OF 2 UPSLOPE STAKES AND 4 DOWNSLOPE STAKES AT AN ANGLE TO WEDGE WATTLE TO BOTTOM OF DITCH.

PROVIDE STAPLES MADE OF 0.125 IN. DIAMETER STEEL WIRE FORMED INTO A U SHAPE NOT LESS THAN 12" IN LENGTH.

INSTALL STAPLES APPROXIMATELY EVERY 1 LINEAR FOOT ON BOTH SIDES OF WATTLE AND AT EACH END TO SECURE IT TO THE SOIL.

INSTALL MATTING IN ACCORDANCE WITH SECTION 1631 OF THE STANDARD SPECIFICATIONS.

PRIOR TO POLYACRYLAMIDE (PAM) APPLICATION, OBTAIN A SOIL SAMPLE FROM PROJECT LOCATION, AND FROM OFFSITE MATERIAL, AND ANALYZE FOR APPROPRIATE PAM FLOCCULANT TO BE APPLIED TO EACH WATTLE.

INITIALLY APPLY 2 OUNCES OF ANIONIC OR NEUTRALLY CHARGED PAM OVER WATTLE WHERE WATER WILL FLOW AND 1 OUNCE OF PAM ON MATTING ON EACH SIDE OF WATTLE. REAPPLY PAM AFTER EVERY RAINFALL EVENT THAT IS EQUAL TO OR EXCEEDS 0.50 IN.

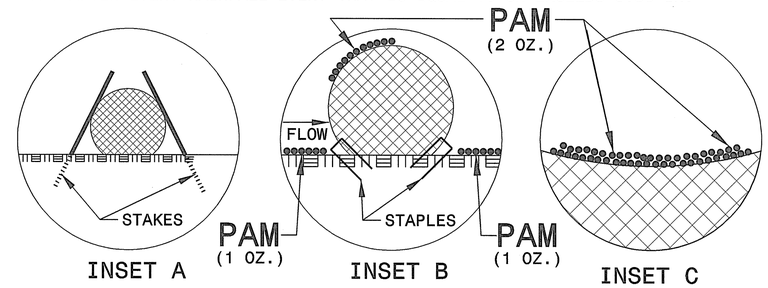

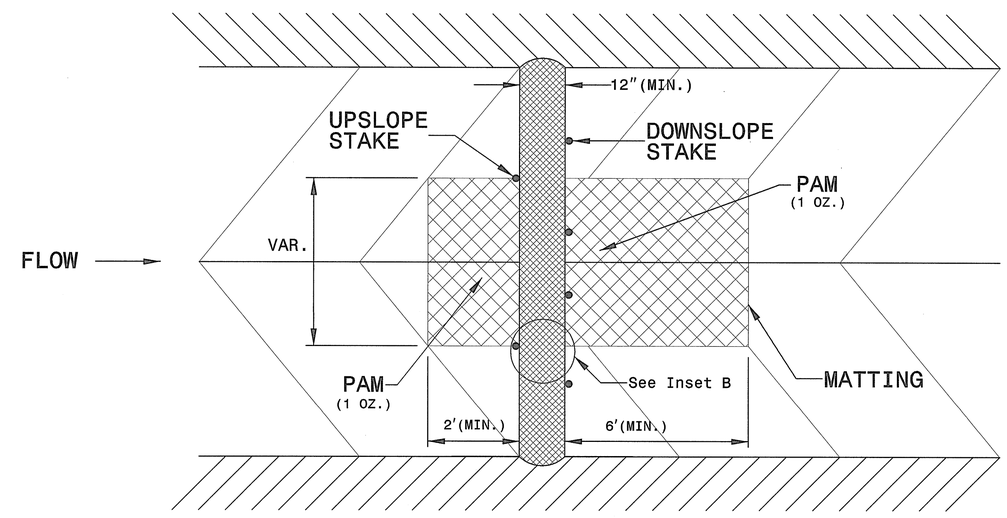

TOP VIEW

REVISIONS

8/17/99

1/28/2013
H:\Pubs\Publics\EC\EC CADD\030244_EC_psh2.dgn
2:25:03 PM

PROJECT REFERENCE NO.	SHEET NO.
17BP.10.R.43	4
R/W SHEET NO.	

HYDRAULICS ENGINEER

NORTH CAROLINA PROFESSIONAL SEAL 21656 ENGINEER ROGER S. WEADON

Roger Weadon 4/19/13

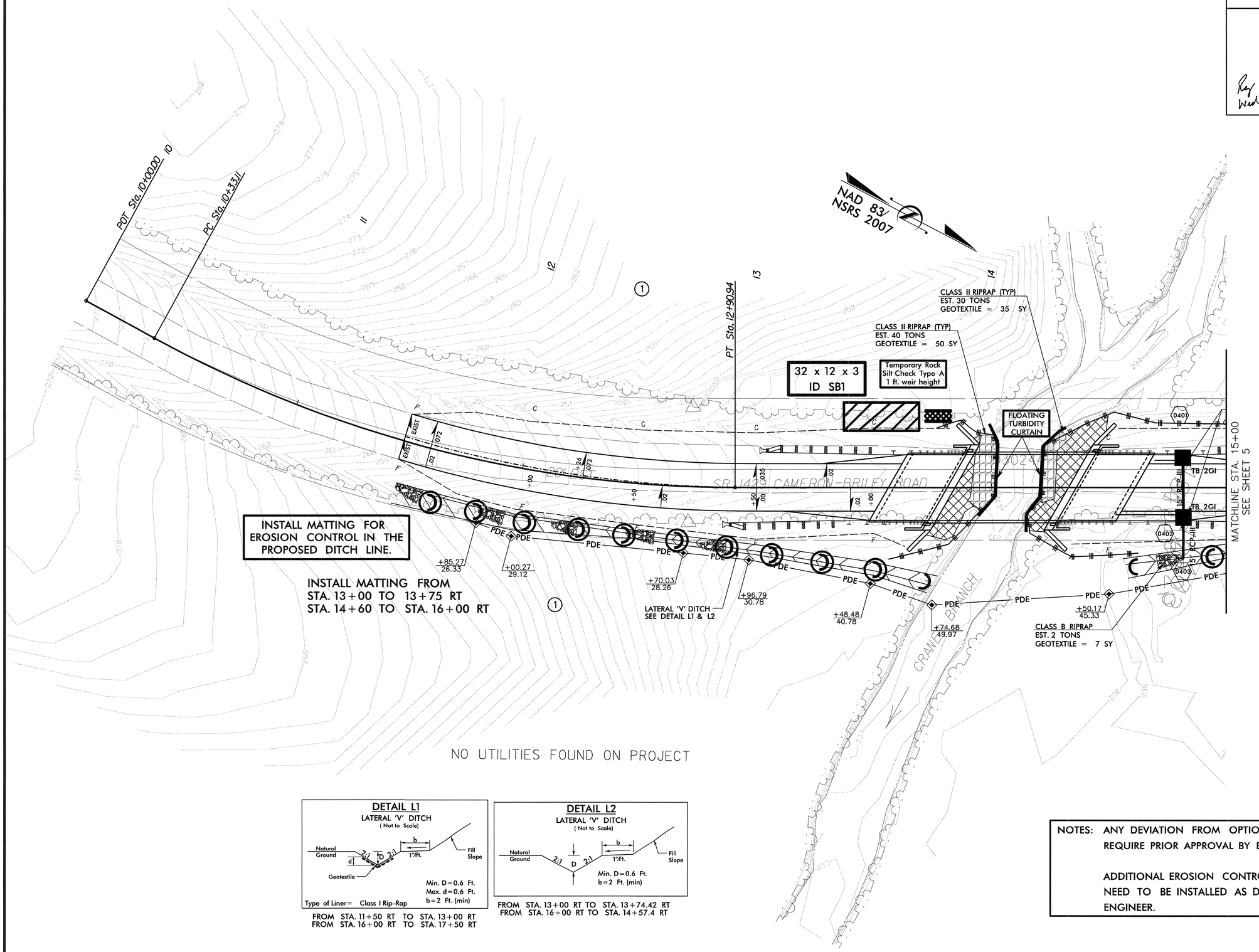

DETAIL L1

LATERAL 'V' DITCH

(Not to Scale)

FROM STA. 11+50 RT TO STA. 13+00 RT
FROM STA. 16+00 RT TO STA. 17+50 RT

DETAIL L2

LATERAL 'V' DITCH

(Not to Scale)

FROM STA. 13+00 RT TO STA. 13+74.42 RT
FROM STA. 16+00 RT TO STA. 14+57.4 RT

NOTES: ANY DEVIATION FROM OPTIONS GIVEN WILL REQUIRE PRIOR APPROVAL BY ENGINEER.

ADDITIONAL EROSION CONTROL DEVICES MAY NEED TO BE INSTALLED AS DIRECTED BY THE ENGINEER.

PROJECT REFERENCE NO.	SHEET NO.
17BP.10.R.43	5
R/W SHEET NO.	

HYDRAULICS ENGINEER

NORTH CAROLINA PROFESSIONAL SEAL 21656 ENGINEER ROGER S. WEADON

4/19/13

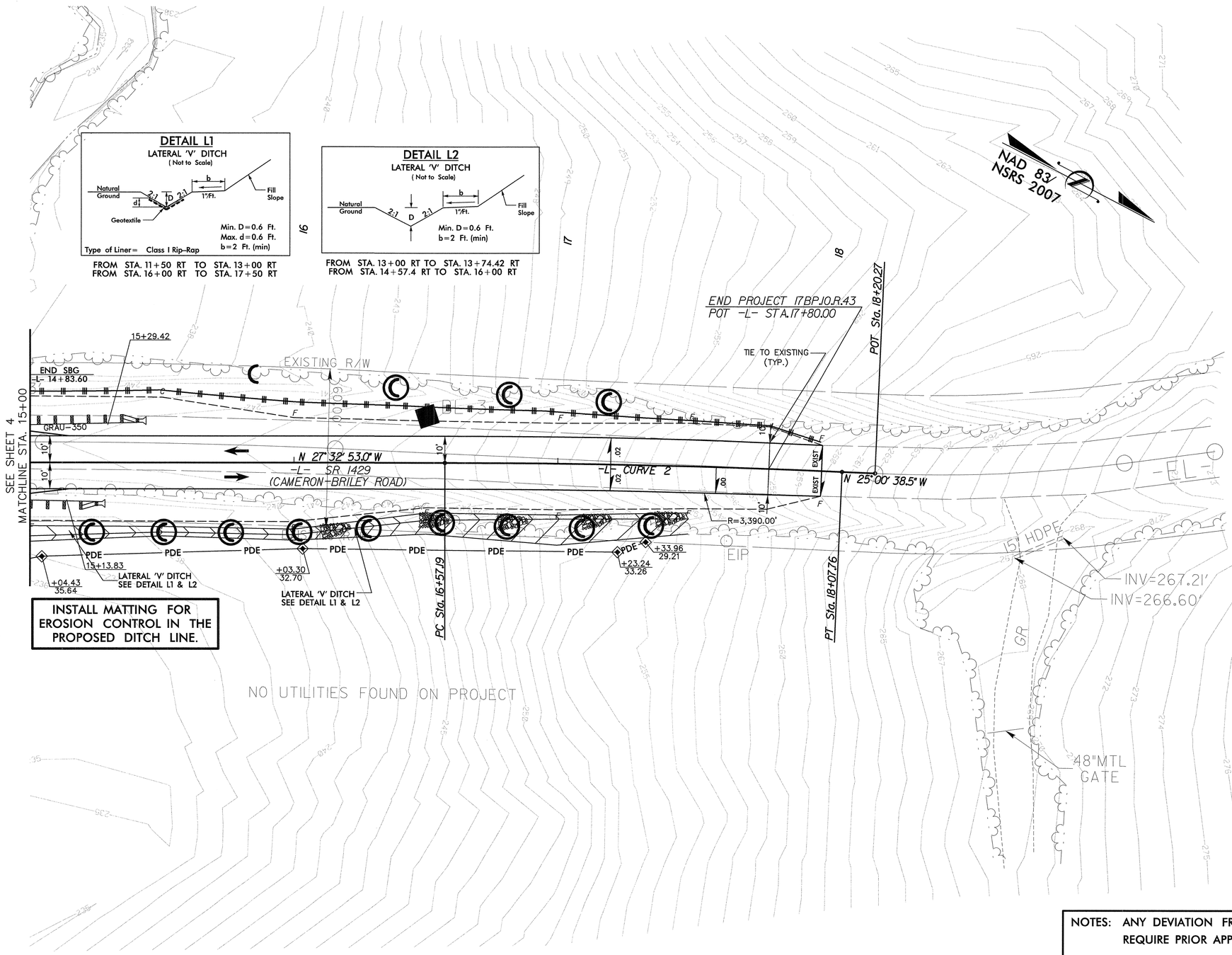

NOTES: ANY DEVIATION FROM OPTIONS GIVEN WILL REQUIRE PRIOR APPROVAL BY ENGINEER.

ADDITIONAL EROSION CONTROL DEVICES MAY NEED TO BE INSTALLED AS DIRECTED BY THE ENGINEER.

REVISIONS

8/17/99

4/19/2013
R:\Hydraulics\EC\EC CADD\030244_EC_psh_5.dgn

8/23/99

0 2.5 5	PROJ. REFERENCE NO.	SHEET NO.
	17BP.10.R.43	X-1

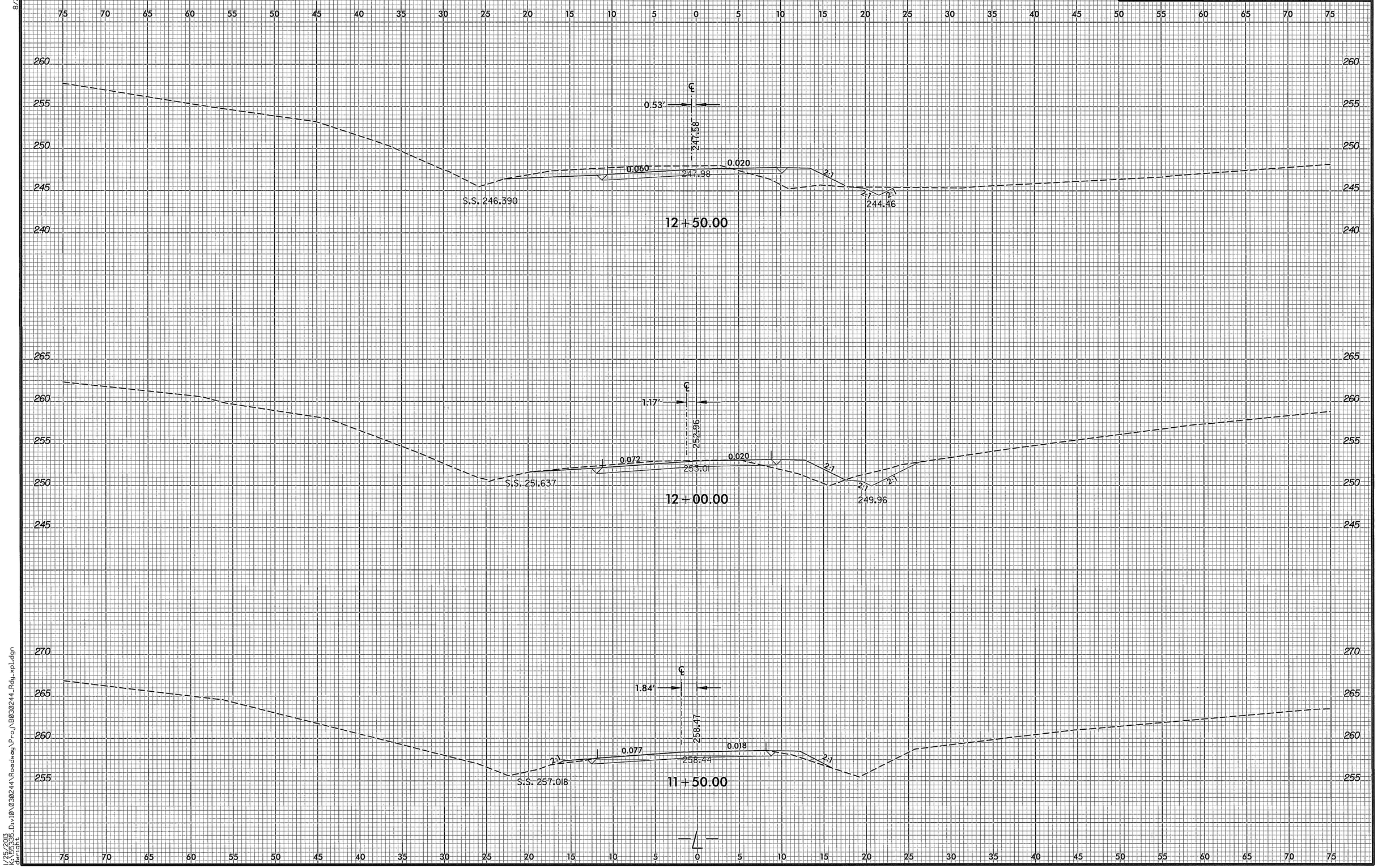

1/25/2013
K:\55335_Div10\030244\Roadway\Proj\B030244_Rdy_xpl.dgn
ARTIGRE

8/23/99

0 2.5 5	PROJ. REFERENCE NO.	SHEET NO.
	17BP.10.R.43	X-2

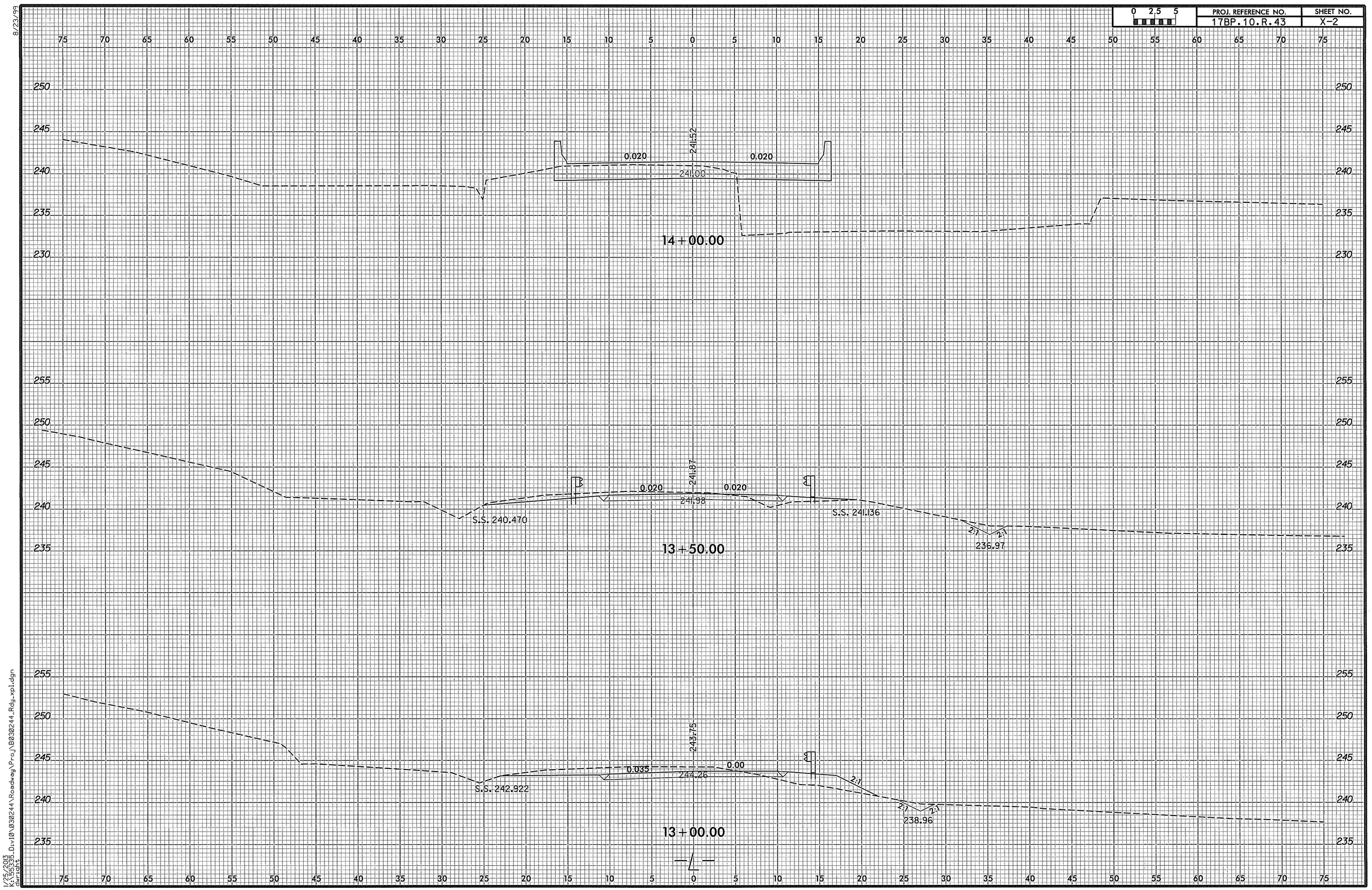

1/25/2013
K:\55535_Div10\030244\Roadway\Proj\B030244_Rdy_xp1.dgn
swrcant2

PROJ. REFERENCE NO.	SHEET NO.
17BP.10.R.43	X-3

REVISIONS

REV	DATE	DESCRIPTION	APPROVED
1	4/19/2013	ADDED APPROACH SLAB	ACJ

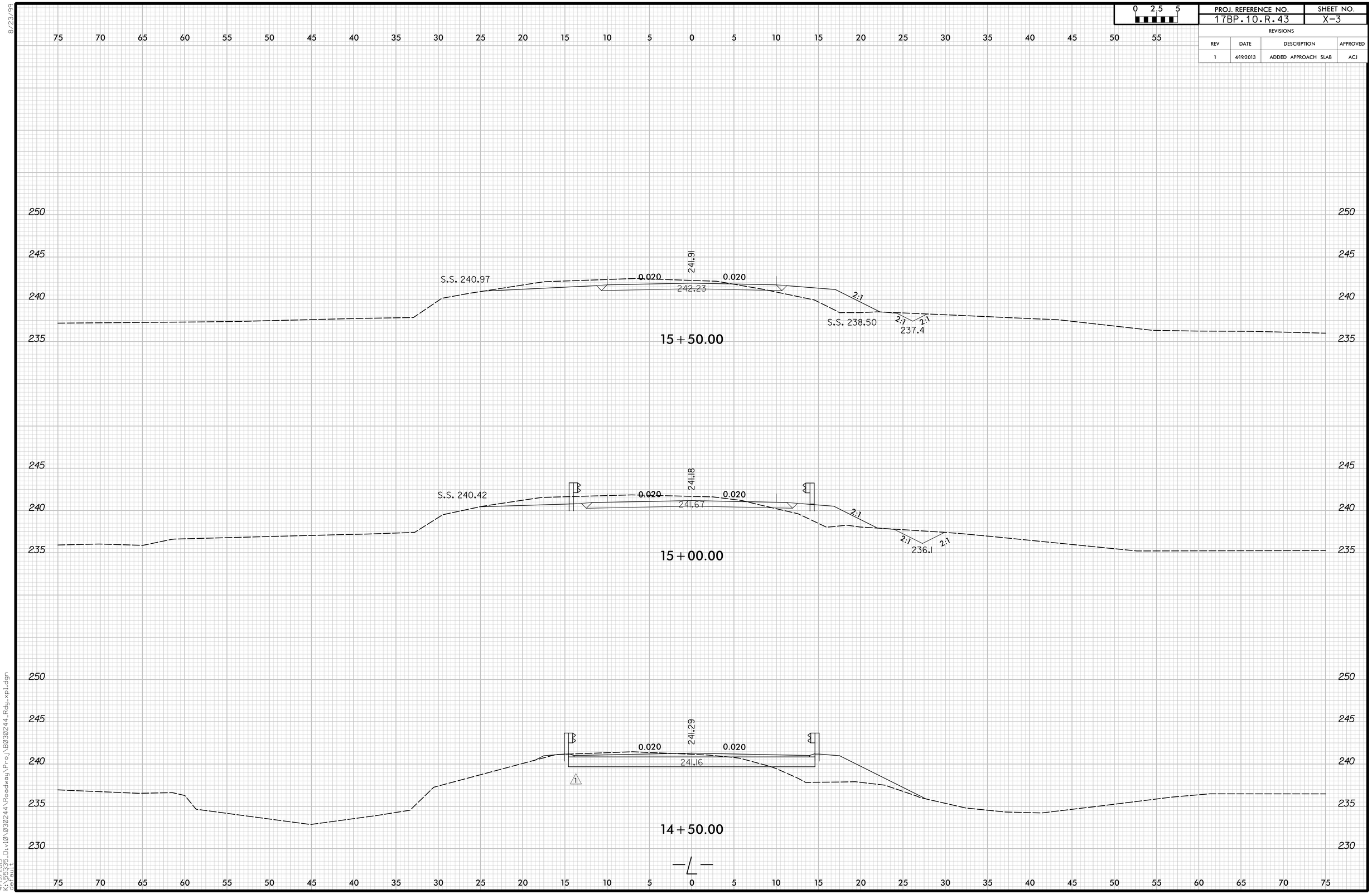

8/23/99

4/19/2013
K:\5633_Div10\030244\Roadway\Proj\B030244_Rdy_xpl.dgn
default

8/23/99

0 2.5 5	PROJ. REFERENCE NO.	SHEET NO.
	17BP.10.R.43	X-4

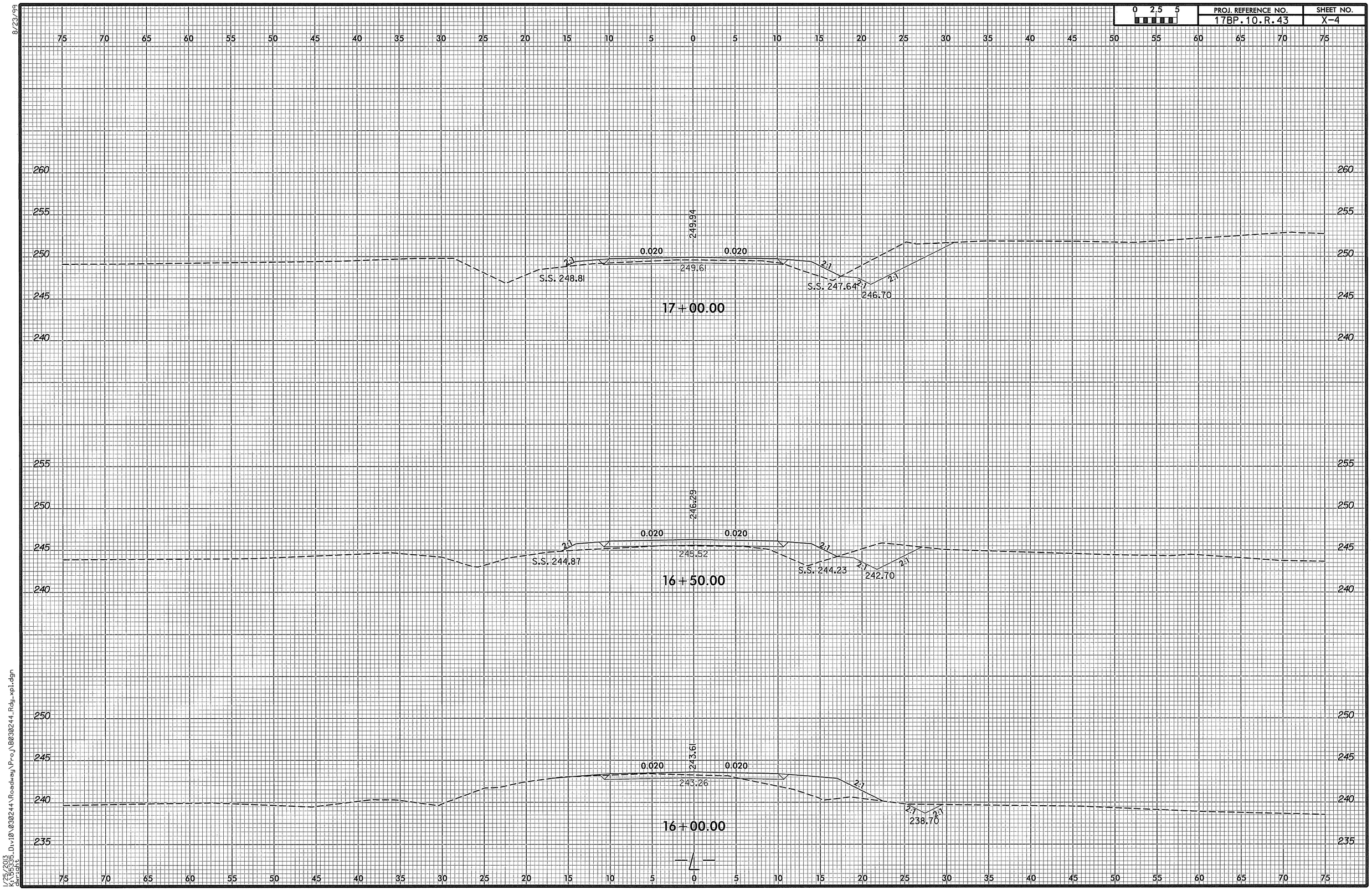

1/25/2005
X:\SSS_Div10\030244\Roadway\Proj\B030244_Rdg_xpl.dgn
ARTSS2

8/23/99

0 2.5 5	PROJ. REFERENCE NO.	SHEET NO.
	17BP.10.R.43	X-5

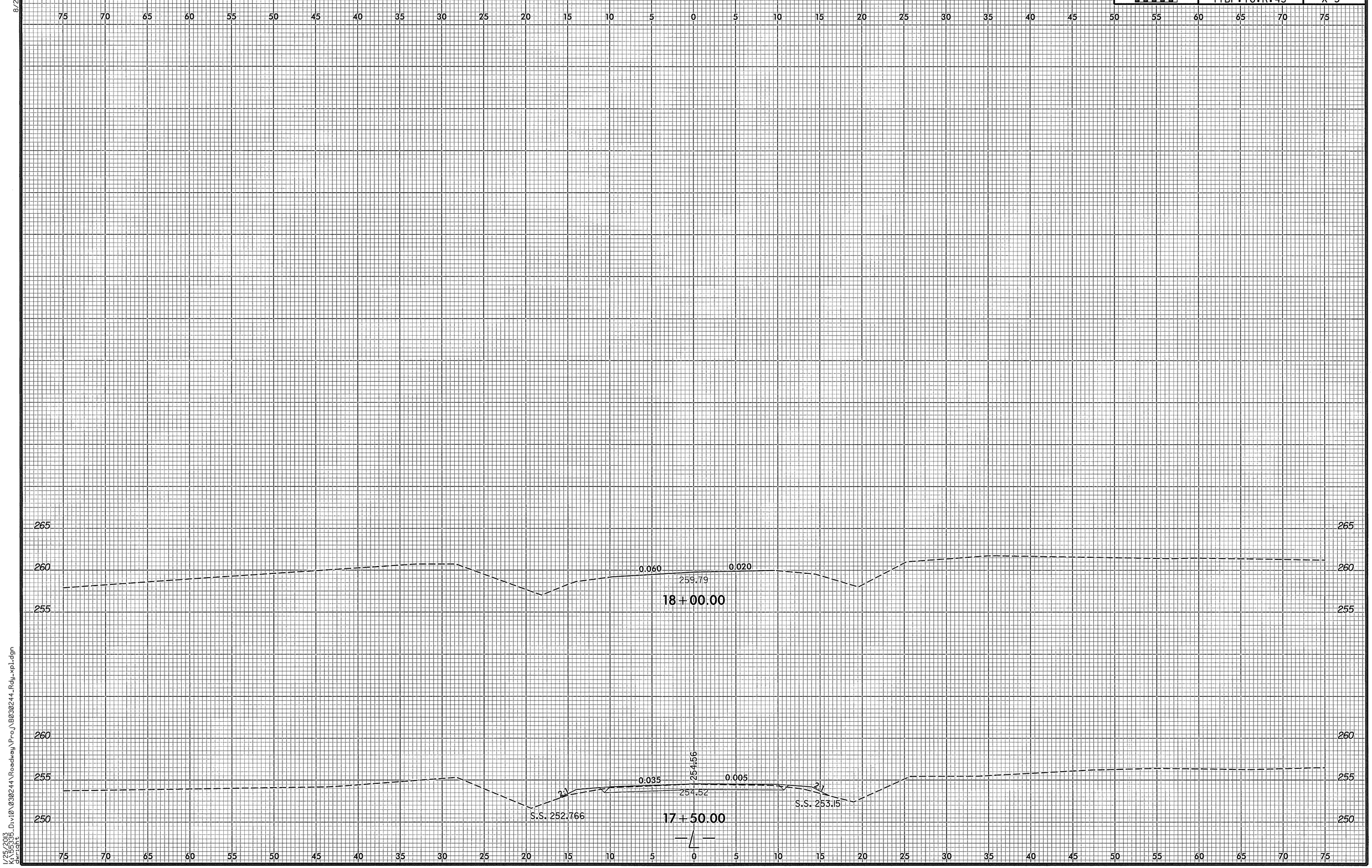

1/25/2013
K:\155335_Div10\030244\Roadway\Proj\B030244_Rdy_xpl.dgn
dwright

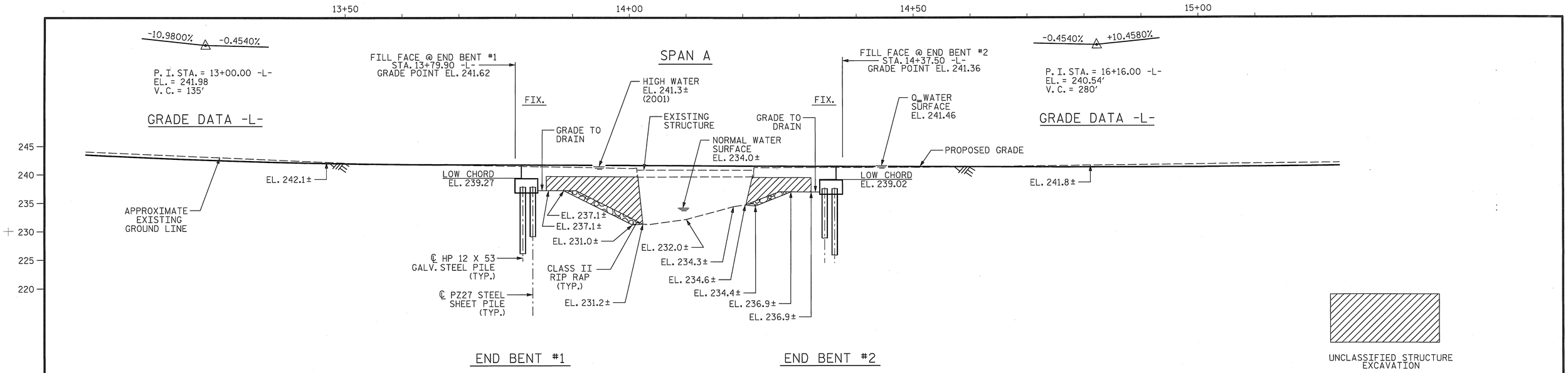

SECTION ALONG CENTER LINE SURVEY -L-

(SECTIONS AT END BENTS ARE AT RIGHT ANGLES)

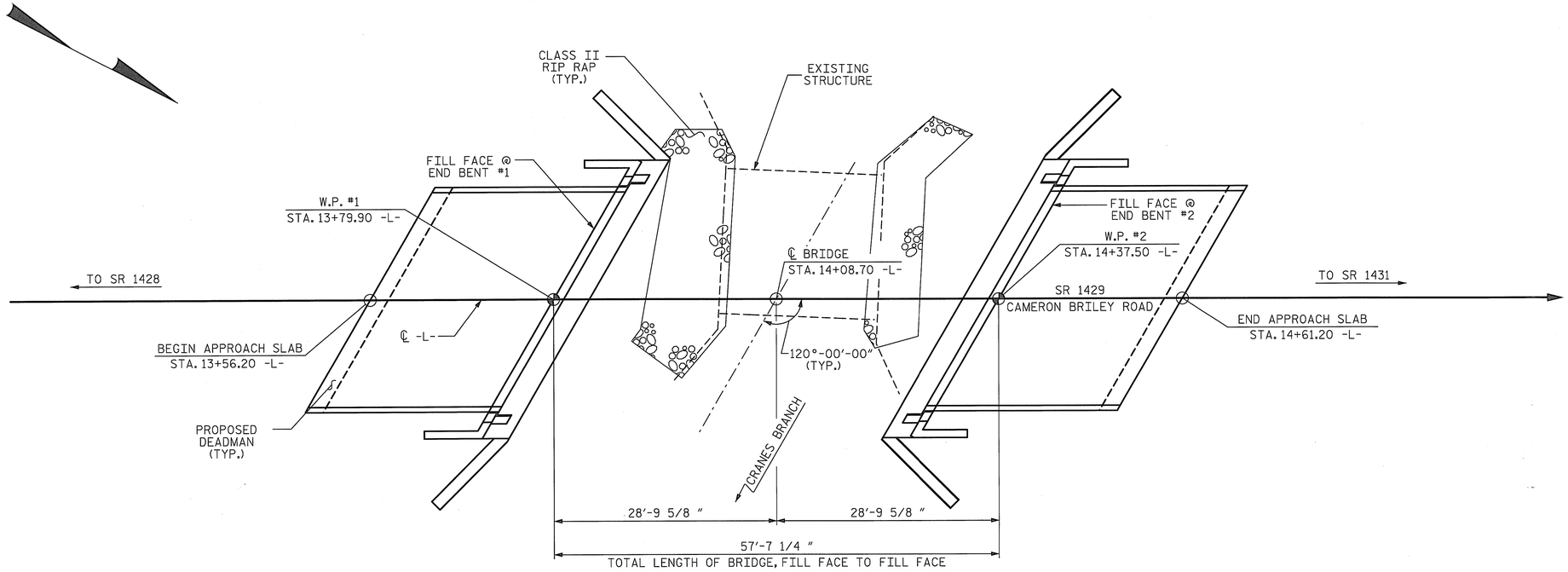

PLAN

(PILES NOT SHOWN IN PLAN VIEW)

I HEREBY CERTIFY THESE PLANS ARE THE AS-BUILT PLANS

PROJECT NO. 17BP.10.R.43

ANSON COUNTY

STATION: 14+08.70 -L-

SHEET 1 OF 4 REPLACES BR. #244

STATE OF NORTH CAROLINA
DEPARTMENT OF TRANSPORTATION
RALEIGH

GENERAL DRAWING

FOR BRIDGE OVER CRANES BRANCH ON SR 1429 BETWEEN SR 1428 AND SR 1431

PLANS PREPARED BY:

Gannett Fleming
RALEIGH, NORTH CAROLINA

NORTH CAROLINA PROFESSIONAL SEAL 037180 ENGINEER RICHARD F. WERTMAN

REVISIONS						SHEET NO.
NO.	BY:	DATE:	NO.	BY:	DATE:	S-1
1			3			TOTAL SHEETS
2			4			14

DRAWN BY : L. M. SAMPLES DATE : 11-07-12
CHECKED BY : J. M. KEPICH DATE : 11-14-12

FILE: K:\055335 Anson Co. BRP\Structure 244\030244\Structures\030244_SD_GD_244.dgn
DATE: 14-Nov-2012 13:23

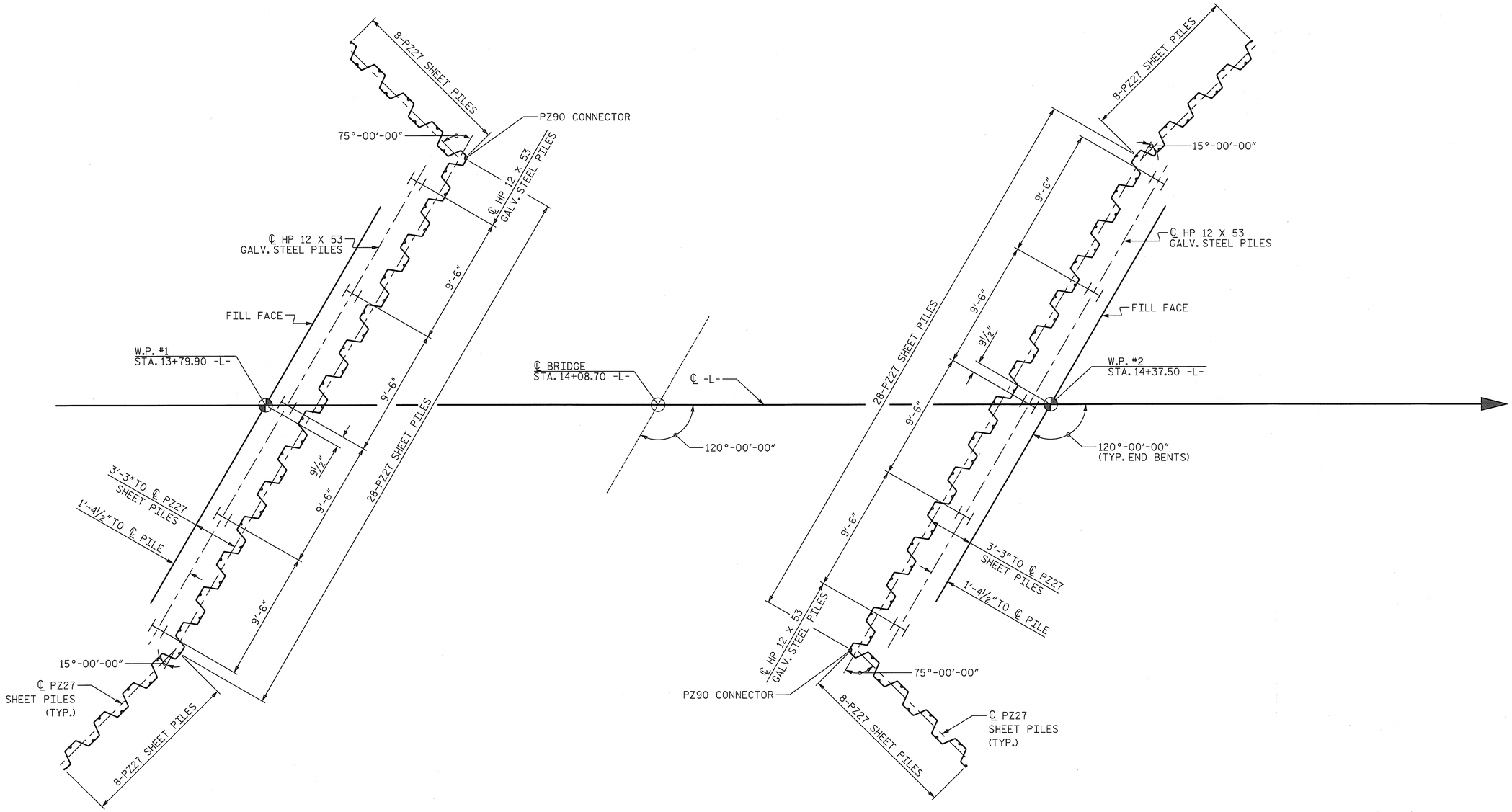

END BENT #1

END BENT #2

FOUNDATION LAYOUT

DIMENSIONS LOCATING PILES ARE SHOWN TO PILE CENTERLINE.

NOTES:

FOR PILES, SEE SECTION 450 OF THE STANDARD SPECIFICATIONS.

PILES AT END BENTS NO. 1 AND NO. 2 ARE DESIGNED FOR A FACTORED RESISTANCE OF 85 TONS.

PILE EXCAVATION IS REQUIRED TO INSTALL PILES AT END BENT NO. 1. EXCAVATE HOLES AT PILE LOCATIONS TO ELEVATION 222 FEET AND WITH A PENETRATION OF AT LEAST 5 FEET INTO ROCK AS DEFINED BY ARTICLE 411-1 OF THE STANDARD SPECIFICATIONS. FOR PILE EXCAVATION, SEE SECTION 450 OF THE STANDARD SPECIFICATIONS.

PILE EXCAVATION IS REQUIRED TO INSTALL PILES AT END BENT NO. 2. EXCAVATE HOLES AT PILE LOCATIONS TO ELEVATION 221 FEET AND WITH A PENETRATION OF AT LEAST 5 FEET INTO ROCK AS DEFINED BY ARTICLE 411-1 OF THE STANDARD SPECIFICATIONS. FOR PILE EXCAVATION, SEE SECTION 450 OF THE STANDARD SPECIFICATIONS.

CONCRETE OR GROUT IS REQUIRED TO FILL HOLES FOR PILE EXCAVATION AT END BENT NO. 1 AND END BENT NO. 2. ABOVE EL 224, THE HOLES SHALL BE BACKFILLED WITH CLASS II TYPE 1 MATERIAL, CLASS III TYPE 1 SELECT MATERIAL, OR EXCAVATABLE FLOWABLE FILL.

INSTALL STEEL SHEET PILES TO REFUSAL AND TO A TIP ELEVATION NO HIGHER THAN EL 223.5. FOR SHEET PILES, SEE ARTICLE 1084-2 OF THE STANDARD SPECIFICATIONS.

THE CONTRACTOR SHALL USE PZ27 STEEL SHEET PILES OR EQUIVALENT.

FOR 18" STEEL SHEET PILES, SEE SPECIAL PROVISIONS.

PLANS PREPARED BY:

Gannett Fleming
RALEIGH, NORTH CAROLINA

NORTH CAROLINA PROFESSIONAL SEAL 037180 ENGINEER RICHARD F. WERTMAN

PROJECT NO. 17BP.10.R.43
ANSON COUNTY
STATION: 14+08.70 -L-

SHEET 2 OF 4

STATE OF NORTH CAROLINA
DEPARTMENT OF TRANSPORTATION
RALEIGH

GENERAL DRAWING
FOR BRIDGE OVER CRANES BRANCH ON SR 1429 BETWEEN SR 1428 AND SR 1431

REVISIONS						SHEET NO.
NO.	BY:	DATE:	NO.	BY:	DATE:	S-2
1			3			TOTAL SHEETS
2			4			14

DRAWN BY : L.M. SAMPLES DATE : 11/13/12
CHECKED BY : J.M. KEPICH DATE : 11/19/12

FILE: K:\055335 Anson Co BRP\Structure 244\030244\Structures\030244_SD_GD_244.dgn
DATE: 13-Nov-2012 09:21

BENCH MARK : NCDOT LS CONTROL PT. "BL-2" 12.25' RIGHT OF STA. 12+25.35 -L- EL. 240.85'

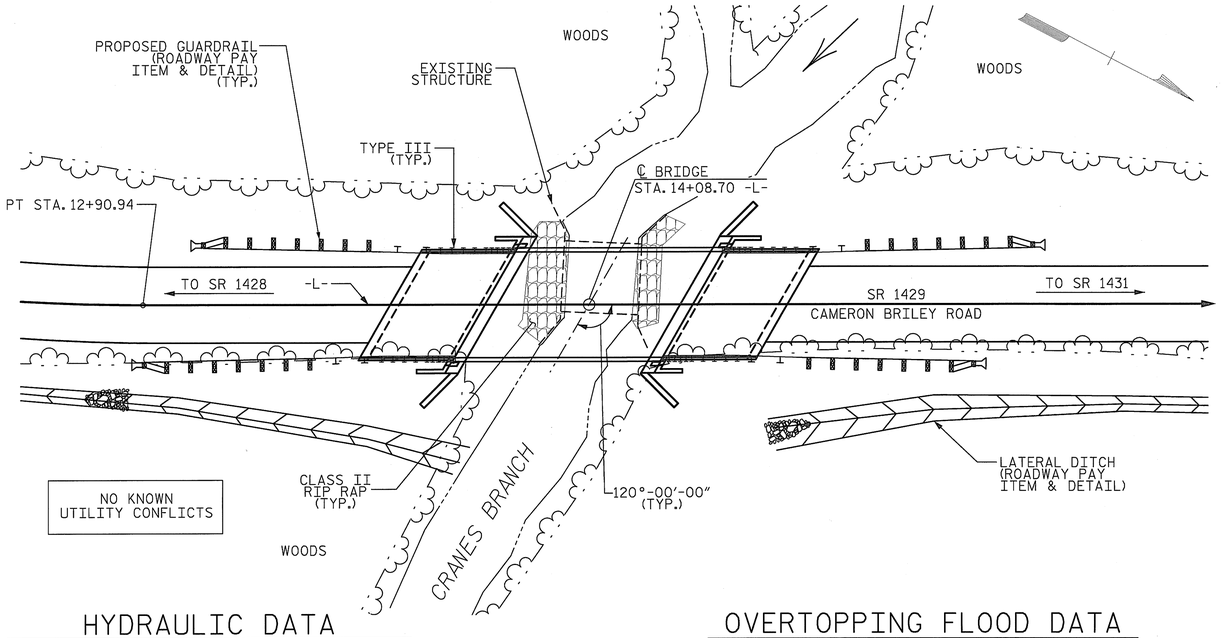

HYDRAULIC DATA

DESIGN DISCHARGE	= 900 C.F.S.
FREQUENCY OF DESIGN FLOOD	= 25 YRS.
DESIGN HIGH WATER ELEVATION	= 240.2
DRAINAGE AREA	= 2.4 SQ. MI.
BASE DISCHARGE (Q100)	= 1300 C.F.S.
BASE HIGH WATER ELEVATION	= 241.46

OVERTOPPING FLOOD DATA

OVERTOPPING DISCHARGE	= 1283 C.F.S.
FREQUENCY OF OVERTOPPING FLOOD	= 100 YRS.(-)
OVERTOPPING FLOOD ELEVATION	= 241.4

LOCATION SKETCH

NOTES:

ASSUMED LIVE LOAD = HL-93 OR ALTERNATE LOADING.

FOR OTHER DESIGN DATA AND GENERAL NOTES, SEE SHEET SN.

FOR EROSION CONTROL MEASURES, SEE EROSION CONTROL PLANS.

THIS BRIDGE HAS BEEN DESIGNED IN ACCORDANCE WITH THE AASHTO LRFD BRIDGE DESIGN SPECIFICATIONS.

THIS BRIDGE IS LOCATED IN SEISMIC ZONE 1.

THE EXISTING 1 SPAN STRUCTURE (1 @ 22'-6") WITH A CLEAR ROADWAY WIDTH OF 19.2' ON A TIMBER DECK WITH 10 LINES OF 6X14" TIMBER JOISTS ON A SUBSTRUCTURE CONSISTING OF YOUNT MASONRY ABUTMENTS AT THE SITE OF THE PROPOSED STRUCTURE SHALL BE REMOVED. THE EXISTING BRIDGE IS PRESENTLY POSTED BELOW THE LEGAL LOAD LIMIT. SHOULD THE STRUCTURAL INTEGRITY OF THE BRIDGE FURTHER DETERIORATE, THE LOAD LIMITATION MAY BE REDUCED AS FOUND NECESSARY DURING THE LIFE OF THE PROJECT.

REMOVAL OF THE EXISTING BRIDGE SHALL BE PERFORMED SO AS NOT TO ALLOW DEBRIS TO FALL INTO THE WATER. THE CONTRACTOR SHALL REMOVE THE BRIDGE AND SUBMIT PLANS FOR DEMOLITION IN ACCORDANCE WITH ARTICLE 402-2 OF THE STANDARD SPECIFICATIONS.

THE SUBSTRUCTURE OF THE EXISTING BRIDGE INDICATED ON THE PLANS IS FROM THE BEST INFORMATION AVAILABLE. SINCE THIS INFORMATION IS SHOWN FOR THE CONVENIENCE OF THE CONTRACTOR, THE CONTRACTOR SHALL HAVE NO CLAIM WHATSOEVER AGAINST THE DEPARTMENT OF TRANSPORTATION FOR ANY DELAYS OR ADDITIONAL COST INCURRED BASED ON DIFFERENCES BETWEEN THE EXISTING BRIDGE SUBSTRUCTURE SHOWN ON THE PLANS AND THE ACTUAL CONDITIONS AT THE PROJECT SITE.

THE MATERIAL SHOWN IN THE CROSS-HATCHED AREA SHALL BE EXCAVATED FOR A DISTANCE OF 30 FT. EACH SIDE OF CENTERLINE ROADWAY AS DIRECTED BY THE ENGINEER. THIS WORK WILL BE PAID AT THE CONTRACT LUMP SUM PRICE FOR UNCLASSIFIED STRUCTURE EXCAVATION. SEE SECTION 412 OF THE STANDARD SPECIFICATIONS.

ASPHALT WEARING SURFACE IS INCLUDED IN ROADWAY QUANTITY ON ROADWAY PLANS.

FOR CRANE SAFETY, SEE SPECIAL PROVISIONS.

FOR GROUT FOR STRUCTURES, SEE SPECIAL PROVISIONS.

THIS STRUCTURE HAS BEEN DESIGNED IN ACCORDANCE WITH HEC 18, "EVALUATING SCOUR AT BRIDGES".

FOR SUBMITTAL OF WORKING DRAWINGS, SEE SPECIAL PROVISIONS.

FOR FALSEWORK AND FORMWORK, SEE SPECIAL PROVISIONS.

TOTAL BILL OF MATERIAL

	REMOVAL OF EXISTING STRUCTURE	UNCLASSIFIED STRUCTURE EXCAVATION	PILE EXCAVATION IN SOIL	PILE EXCAVATION NOT IN SOIL	CLASS A CONCRETE	BRIDGE APPROACH SLABS	REINFORCING STEEL	EPOXY COATED REINFORCING STEEL	HP 12 X 53 GALVANIZED STEEL PILES		CONCRETE BARRIER RAIL	RIP RAP CLASS II (2'-0" THICK)	GEOTEXTILE FOR DRAINAGE	ELASTOMERIC BEARINGS	3'-0" X 1'-9" PRESTRESSED CONCRETE CORED SLABS		18" STEEL SHEET PILES
	LUMP SUM	LUMP SUM	LIN.FT.	LIN.FT.	CU. YDS.	LUMP SUM	LBS.	LBS.	NO.	LIN.FT.	LIN.FT.	TONS	SQ.YDS.	LUMP SUM	NO.	LIN.FT.	SQ.FT.
SUPERSTRUCTURE											110.29				10	550	
END BENT NO. 1			135	25	20.8		2933	160	5	175		40	50				903.5
END BENT NO. 2			120	25	20.8		2933	160	5	175		30	35				887.0
TOTAL	LUMP SUM	LUMP SUM	255	50	41.6	LUMP SUM	5866	320	10	350	110.29	70	85	LUMP SUM	10	550	1790.5

PROJECT NO. 17BP.10.R.43

ANSON COUNTY

STATION: 14+08.70 -L-

SHEET 3 OF 4

STATE OF NORTH CAROLINA
DEPARTMENT OF TRANSPORTATION
RALEIGH

GENERAL DRAWING

FOR BRIDGE OVER CRANES BRANCH ON SR 1429 BETWEEN SR 1428 AND SR 1431

PLANS PREPARED BY:

Gannett Fleming
RALEIGH, NORTH CAROLINA

NORTH CAROLINA PROFESSIONAL SEAL 037189 ENGINEER RICHARD F. WERTMAN

REVISIONS								SHEET NO.
NO.	BY:	DATE:	NO.	BY:	DATE:			S-3
1			3					TOTAL SHEETS
2			4					14

DRAWN BY : L.M. SAMPLES DATE : 11-07-12
CHECKED BY : J.M. KEPICH DATE : 11-19-12

FILE:K:\055335 Anson Co.BRP\Structure 244\030244\Structures\030244_SD_GD_244.dgn
DATE:11-Nov-2012 17:28

LOAD AND RESISTANCE FACTOR RATING (LRFD) SUMMARY FOR PRESTRESSED CONCRETE GIRDERS

LEVEL		VEHICLE	WEIGHT (W) (TONS)	CONTROLLING LOAD RATING	MINIMUM RATING FACTORS (RF)	TONS = W X RF	STRENGTH I LIMIT STATE											SERVICE III LIMIT STATE						COMMENT NUMBER
							LIVELOAD FACTORS	MOMENT					SHEAR					LIVELOAD FACTORS	MOMENT					
								DISTRIBUTION FACTORS (DF)	RATING FACTOR	SPAN	GIRDER LOCATION	DISTANCE FROM LEFT END OF SPAN (ft)	DISTRIBUTION FACTORS (DF)	RATING FACTOR	SPAN	GIRDER LOCATION	DISTANCE FROM LEFT END OF SPAN (ft)		DISTRIBUTION FACTORS (DF)	RATING FACTOR	SPAN	GIRDER LOCATION	DISTANCE FROM LEFT END OF SPAN (ft)	
DESIGN LOAD RATING		HL-93(Inv)	N/A	1	1.163	--	1.75	0.249	1.36	55′	EL	26.923	0.659	1.21	55′	EL	10.769	0.80	0.249	**1.16**	55′	EL	**26.923**	
		HL-93(Opr)	N/A	--	1.564	--	1.35	0.249	1.76	55′	EL	26.923	0.659	1.56	55′	EL	10.769	N/A	--	--	--	--	--	
		HS-20(Inv)	36.000	2	1.424	51.265	1.75	0.249	1.7	55′	EL	26.923	0.659	**1.42**	55′	EL	**10.769**	0.80	0.249	1.46	55′	EL	26.923	
		HS-20(Opr)	36.000	--	1.846	66.455	1.35	0.249	2.2	55′	EL	26.923	0.659	1.85	55′	EL	10.769	N/A	--	--	--	--	--	
LEGAL LOAD RATING	SV	SNSH	13.500	--	3.057	41.264	1.4	0.249	4.46	55′	EL	26.923	0.659	3.96	55′	EL	10.769	0.80	0.249	3.06	55′	EL	26.923	
		SNGARBS2	20.000	--	2.374	47.473	1.4	0.249	3.46	55′	EL	26.923	0.659	2.9	55′	EL	10.769	0.80	0.249	2.37	55′	EL	26.923	
		SNAGRIS2	22.000	--	2.291	50.392	1.4	0.249	3.34	55′	EL	26.923	0.659	2.72	55′	EL	10.769	0.80	0.249	2.29	55′	EL	26.923	
		SNCOTTS3	27.250	--	1.524	41.521	1.4	0.249	2.22	55′	EL	26.923	0.659	1.98	55′	EL	10.769	0.80	0.249	1.52	55′	EL	26.923	
		SNAGGRS4	34.925	--	1.31	45.74	1.4	0.249	1.91	55′	EL	26.923	0.659	1.71	55′	EL	10.769	0.80	0.249	1.31	55′	EL	26.923	
		SNS5A	35.550	--	1.278	45.439	1.4	0.249	1.86	55′	EL	26.923	0.659	1.76	55′	EL	10.769	0.80	0.249	1.28	55′	EL	26.923	
		SNS6A	39.950	--	1.189	47.481	1.4	0.249	1.73	55′	EL	26.923	0.659	1.63	55′	EL	10.769	0.80	0.249	1.19	55′	EL	26.923	
		SNS7B	42.000	--	1.132	47.562	1.4	0.249	1.65	55′	EL	26.923	0.659	1.64	55′	EL	10.769	0.80	0.249	1.13	55′	EL	26.923	
	TTST	TNAGRIT3	33.000	--	1.454	47.984	1.4	0.249	2.12	55′	EL	26.923	0.659	1.92	55′	EL	10.769	0.80	0.249	1.45	55′	EL	26.923	
		TNT4A	33.075	--	1.465	48.451	1.4	0.249	2.14	55′	EL	26.923	0.659	1.85	55′	EL	10.769	0.80	0.249	1.46	55′	EL	26.923	
		TNT6A	41.600	--	1.213	50.478	1.4	0.249	1.77	55′	EL	26.923	0.659	1.81	55′	EL	10.769	0.80	0.249	1.21	55′	EL	26.923	
		TNT7A	42.000	--	1.228	51.576	1.4	0.249	1.79	55′	EL	26.923	0.659	1.67	55′	EL	10.769	0.80	0.249	1.23	55′	EL	26.923	
		TNT7B	42.000	--	1.282	53.827	1.4	0.249	1.87	55′	EL	26.923	0.659	1.58	55′	EL	10.769	0.80	0.249	1.28	55′	EL	26.923	
		TNAGRIT4	43.000	--	1.213	52.158	1.4	0.249	1.77	55′	EL	26.923	0.659	1.52	55′	EL	10.769	0.80	0.249	1.21	55′	EL	26.923	
		TNAGT5A	45.000	--	1.136	51.134	1.4	0.249	1.66	55′	EL	26.923	0.659	1.55	55′	EL	10.769	0.80	0.249	1.14	55′	EL	26.923	
		TNAGT5B	45.000	3	1.116	50.224	1.4	0.249	1.63	55′	EL	26.923	0.659	1.44	55′	EL	10.769	0.80	0.249	**1.12**	55′	EL	**26.923**	

LOAD FACTORS:

DESIGN LOAD RATING FACTORS	LIMIT STATE	γ_{DC}	γ_{DW}
	STRENGTH I	1.25	1.50
	SERVICE III	1.00	1.00

NOTES:

MINIMUM RATING FACTORS ARE BASED ON THE STRENGTH I AND SERVICE III LIMIT STATES.

ALLOWABLE STRESSES FOR SERVICE III LIMIT STATE ARE AS REQUIRED FOR DESIGN.

COMMENTS:

1.
2.
3.
4.

(#) CONTROLLING LOAD RATING

(1) DESIGN LOAD RATING (HL-93)

(2) DESIGN LOAD RATING (HS-20)

(3) LEGAL LOAD RATING **

** SEE CHART FOR VEHICLE TYPE

GIRDER LOCATION

I - INTERIOR GIRDER
EL - EXTERIOR LEFT GIRDER
ER - EXTERIOR RIGHT GIRDER

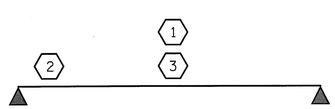

LRFR SUMMARY

FOR SPAN A

PROJECT NO. 17BP.10.R.43

ANSON COUNTY

STATION: 14+08.70 -L-

SHEET 4 OF 4

STATE OF NORTH CAROLINA
DEPARTMENT OF TRANSPORTATION
RALEIGH

STANDARD
GENERAL DRAWING
LRFR SUMMARY FOR
55′ CORED SLAB UNIT
60° SKEW & 120° SKEW
(NON-INTERSTATE TRAFFIC)

REVISIONS						SHEET NO.
NO.	BY:	DATE:	NO.	BY:	DATE:	S-4
1			3			TOTAL SHEETS
2			4			14

ASSEMBLED BY : L.M. SAMPLES DATE : 11/09/12
CHECKED BY : J.M. KEPICH DATE : 11/12/12

DRAWN BY : CVC 6/10
CHECKED BY : DNS 6/10

PLANS PREPARED BY:
Gannett Fleming
RALEIGH, NORTH CAROLINA

THESE PLANS HAVE BEEN PROPERLY EXAMINED BY THE UNDERSIGNED. I HAVE DETERMINED THAT THEY COMPLY WITH EXISTING NORTH CAROLINA CODES, AND HAVE BEEN PROPERLY ADAPTED FOR USE IN THIS AREA.

NORTH CAROLINA PROFESSIONAL SEAL 037180 ENGINEER RICHARD F WERTMAN

STD. NO. 21LRFR1_60&120S_55L

FILE: K:\055335 Anson Co.BRP\Structure 244\030244\Structures\030244_SD_GD_244.dgn
DATE: 13-Nov-2012 09:20

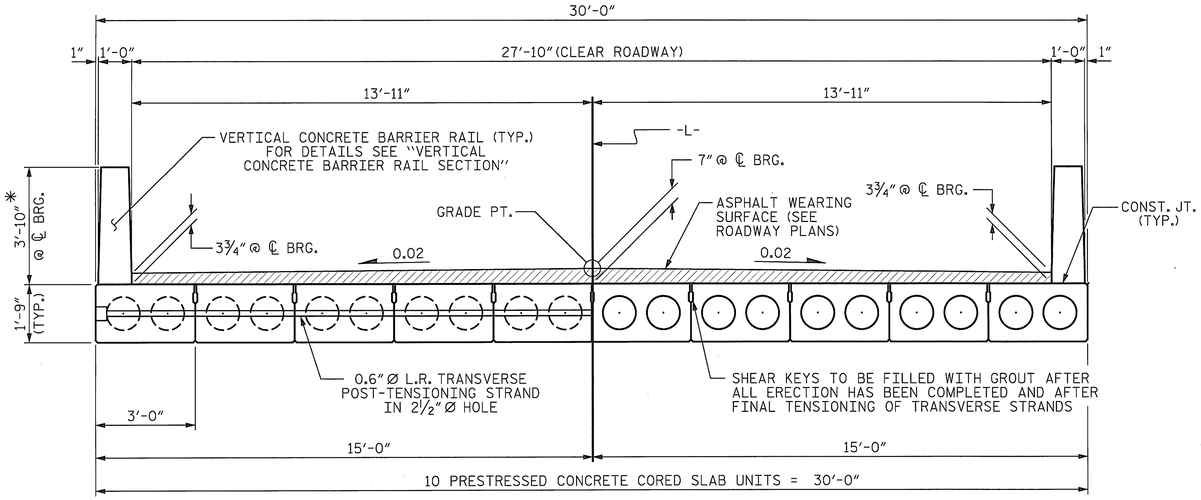

HALF SECTION
AT INTERMEDIATE DIAPHRAGMS

HALF SECTION
THROUGH VOIDS

TYPICAL SECTION

* - THE MAXIMUM BARRIER RAIL HEIGHT AND ASPHALT THICKNESS IS SHOWN. THE HEIGHT OF THE BARRIER RAIL AND ASPHALT THICKNESS VARIES WHILE THE TOP OF THE BARRIER RAIL FOLLOWS THE PROFILE OF THE GUTTERLINE. FOR RAIL HEIGHT DETAILS AND ASPHALT THICKNESS SEE THE "VERTICAL CONCRETE BARRIER RAIL SECTION" DETAIL.

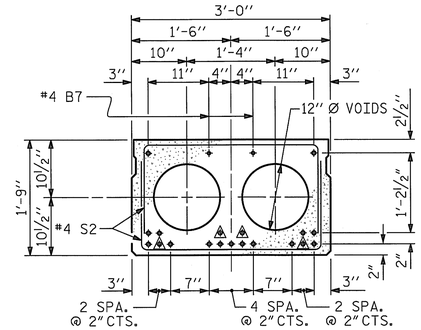

INTERIOR SLAB SECTION
(55' UNIT)
(19 STRANDS REQUIRED)

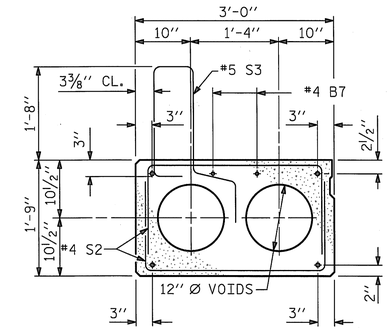

EXT. SLAB SECTION
(FOR PRESTRESSED STRAND LAYOUT, SEE INTERIOR SLAB SECTION.)

0.6" Ø LOW RELAXATION STRAND LAYOUT

⚠ BOND SHALL BE BROKEN ON THESE STRANDS FOR A DISTANCE OF 6'-0" FROM END OF CORED SLAB UNIT. SEE STANDARD SPECIFICATIONS, ARTICLE 1078-7.

DEBONDING LEGEND

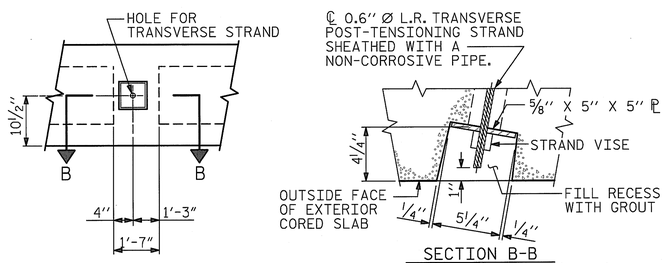

ELEVATION VIEW

SECTION B-B

GROUTED RECESS AT END OF POST-TENSIONED STRAND OF CORED SLABS

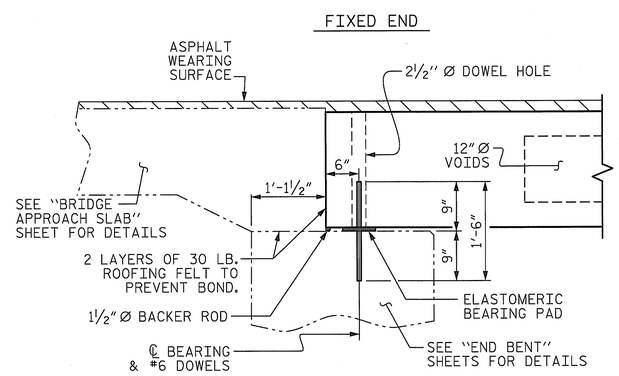

SECTION AT END BENT

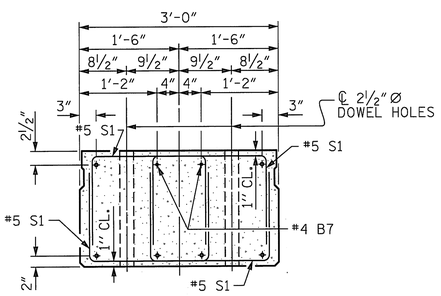

END ELEVATION

SHOWING PLACEMENT OF DOUBLE STIRRUPS AND LOCATION OF DOWEL HOLES. (STRAND LAYOUT NOT SHOWN.) INTERIOR SLAB UNIT SHOWN-EXTERIOR SLAB UNIT SIMILAR EXCEPT SHEAR KEY LOCATION.

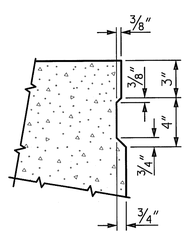

SHEAR KEY DETAIL

NOTE: OMIT SHEAR KEY ON OUTSIDE FACE OF EXTERIOR CORED SLABS.

PROJECT NO. 17BP.10.R.43
ANSON COUNTY
STATION: 14+08.70 -L-

SHEET 1 OF 3

STATE OF NORTH CAROLINA
DEPARTMENT OF TRANSPORTATION
RALEIGH

STANDARD
3'-0" X 1'-9"
PRESTRESSED CONCRETE CORED SLAB UNIT
120° SKEW

ASSEMBLED BY : L.M. SAMPLES	DATE : 11/07/12		
CHECKED BY : J.M. KEPICH	DATE : 11/07/12		
DRAWN BY : DGE 5/09	REV. 12/11	MAA/AAC	
CHECKED BY : BCH 6/09			

PLANS PREPARED BY:
Gannett Fleming
RALEIGH, NORTH CAROLINA

THESE PLANS HAVE BEEN PROPERLY EXAMINED BY THE UNDERSIGNED. I HAVE DETERMINED THAT THEY COMPLY WITH EXISTING NORTH CAROLINA CODES, AND HAVE BEEN PROPERLY ADAPTED FOR USE IN THIS AREA.

NORTH CAROLINA PROFESSIONAL SEAL 037180 ENGINEER RICHARD F. WERTMAN

REVISIONS								SHEET NO.
NO.	BY:	DATE:	NO.	BY:	DATE:			S-5
1			3					TOTAL SHEETS
2			4					14

STD. NO. 21" PCS2_30_120S

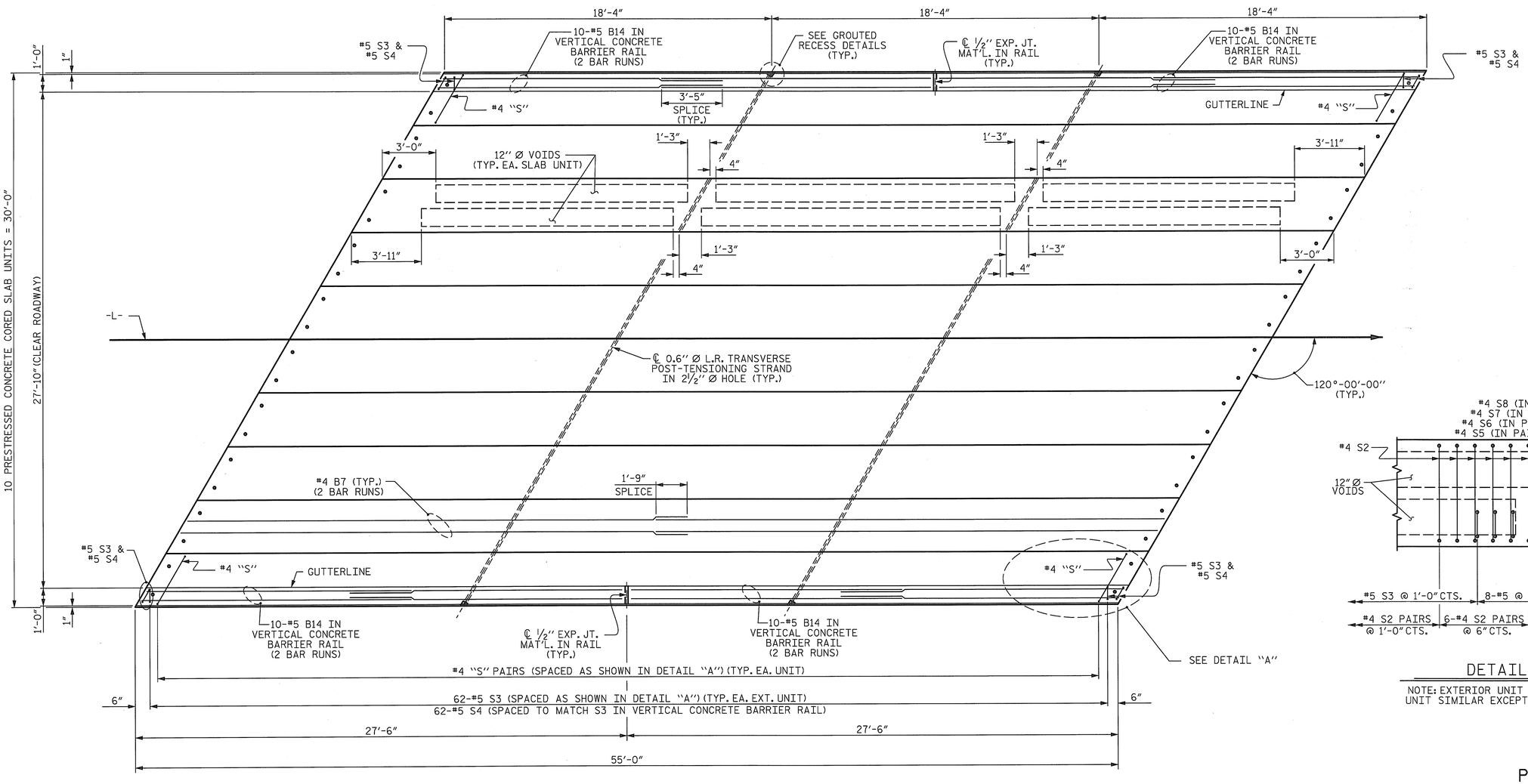

PLAN OF UNIT

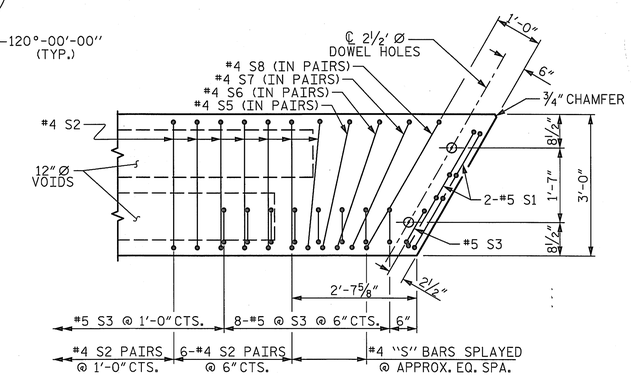

DETAIL "A"

NOTE: EXTERIOR UNIT SHOWN - INTERIOR UNIT SIMILAR EXCEPT OMIT #5 S3 BARS.

PROJECT NO. 17BP.10.R.43

ANSON COUNTY

STATION: 14+08.70 -L-

SHEET 2 OF 3

STATE OF NORTH CAROLINA
DEPARTMENT OF TRANSPORTATION
RALEIGH

PLAN OF 55' UNIT
27'-10" CLEAR ROADWAY
120° SKEW

REVISIONS							SHEET NO.
NO.	BY:	DATE:	NO.	BY:	DATE:		S-6
1			3				TOTAL SHEETS
2			4				14

ASSEMBLED BY : L.M. SAMPLES		DATE : 11/07/12	
CHECKED BY : J.M. KEPICH		DATE : 11/07/12	
DRAWN BY : DGE	3/09	REV. 12/5/11	MAA/AAC
CHECKED BY : BCH	3/09		

PLANS PREPARED BY:
Gannett Fleming
RALEIGH, NORTH CAROLINA

THESE PLANS HAVE BEEN PROPERLY EXAMINED BY THE UNDERSIGNED. I HAVE DETERMINED THAT THEY COMPLY WITH EXISTING NORTH CAROLINA CODES, AND HAVE BEEN PROPERLY ADAPTED FOR USE IN THIS AREA.

NORTH CAROLINA PROFESSIONAL SEAL 037180 ENGINEER RICHARD F. WERTMAN

STD. NO. 21" PCS_30_120S_55L

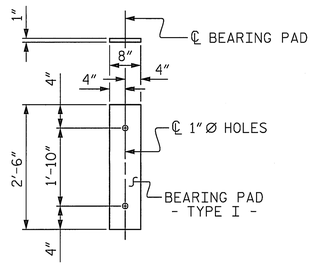

FIXED END
(TYPE I - 20 REQ'D)

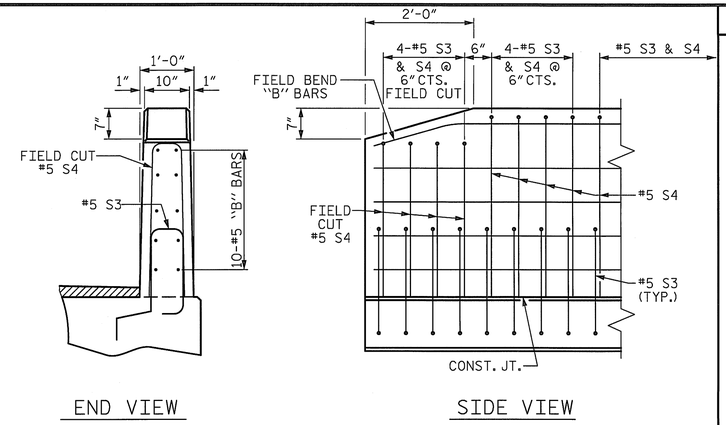

END OF RAIL DETAILS

BAR TYPES

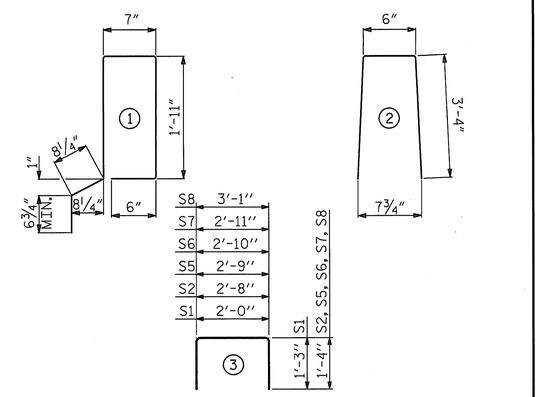

ALL BAR DIMENSIONS ARE OUT TO OUT

NOTES

ALL PRESTRESSING STRANDS SHALL BE 7-WIRE LOW RELAXATION GRADE 270 STRANDS AND SHALL CONFORM TO AASHTO M203 EXCEPT FOR SAMPLING REQUIREMENTS WHICH SHALL BE IN ACCORDANCE WITH THE STANDARD SPECIFICATIONS.

ALL REINFORCING STEEL CAST WITH THE CORED SLAB SECTIONS SHALL BE GRADE 60 AND SHALL BE INCLUDED IN THE UNIT PRICE BID FOR PRESTRESSED CONCRETE CORED SLABS.

RECESSES FOR TRANSVERSE STRANDS SHALL BE GROUTED AFTER THE TENSIONING OF THE STRANDS.

THE 2½"Ø DOWEL HOLES AT FIXED ENDS OF SLAB SECTIONS SHALL BE FILLED WITH NON-SHRINK GROUT.

THE BACKER RODS SHALL CONFORM TO THE REQUIREMENTS OF TYPE M BOND BREAKER. SEE SECTION 1028 OF THE STANDARD SPECIFICATIONS.

WHEN CORED SLABS ARE CAST, AN INTERNAL HOLD-DOWN SYSTEM SHALL BE EMPLOYED TO PREVENT VOIDS FROM RISING OR MOVING SIDEWAYS. AT LEAST SIX WEEKS PRIOR TO CASTING CORED SLABS, THE CONTRACTOR SHALL SUBMIT TO THE ENGINEER FOR REVIEW AND COMMENT, DETAILED DRAWINGS OF THE PROPOSED HOLD-DOWN SYSTEM. IN ADDITION TO STRUCTURAL DETAILS, LOCATION AND SPACING OF THE HOLD-DOWNS SHALL BE INDICATED.

ALL REINFORCING STEEL IN THE VERTICAL CONCRETE BARRIER RAIL SHALL BE EPOXY COATED.

PRESTRESSING STRANDS SHALL BE CUT FLUSH WITH THE CORED SLAB UNIT ENDS.

APPLY EPOXY PROTECTIVE COATING TO CORED SLAB UNIT ENDS.

GROOVED CONTRACTION JOINTS, ½" IN DEPTH, SHALL BE TOOLED IN ALL EXPOSED FACES OF THE BARRIER RAIL AND IN ACCORDANCE WITH ARTICLE 825-10(B) OF THE STANDARD SPECIFICATIONS. A CONTRACTION JOINT SHALL BE LOCATED AT EACH THIRD POINT BETWEEN BARRIER RAIL EXPANSION JOINTS. ONLY ONE CONTRACTION JOINT IS REQUIRED AT MIDPOINT OF BARRIER RAIL SEGMENTS LESS THAN 20 FEET IN LENGTH AND NO CONTRACTION JOINTS ARE REQUIRED FOR THOSE SEGMENTS LESS THAN 10 FEET IN LENGTH.

TRANSVERSE POST TENSIONING OF THE CORED SLAB UNITS SHALL BE DONE IN ACCORDANCE WITH THE STANDARD SPECIFICATIONS.

THE TRANSFER OF LOAD FROM THE ANCHORAGES TO THE CORED SLAB UNIT SHALL BE DONE WHEN THE CONCRETE HAS REACHED A COMPRESSIVE STRENGTH OF NOT LESS THAN THE REQUIRED STRENGTH SHOWN IN THE "CONCRETE RELEASE STRENGTH" TABLE.

FOR GROUT FOR STRUCTURES, SEE SPECIAL PROVISIONS.

ELASTOMERIC BEARING DETAILS

ELASTOMER IN ALL BEARINGS SHALL BE 50 DUROMETER HARDNESS.

CONCRETE RELEASE STRENGTH	
UNIT	PSI
55' UNITS	4900

GRADE 270 STRANDS	0.6"Ø L.R.
AREA (SQUARE INCHES)	0.217
ULTIMATE STRENGTH (LBS. PER STRAND)	58,600
APPLIED PRESTRESS (LBS. PER STRAND)	43,950

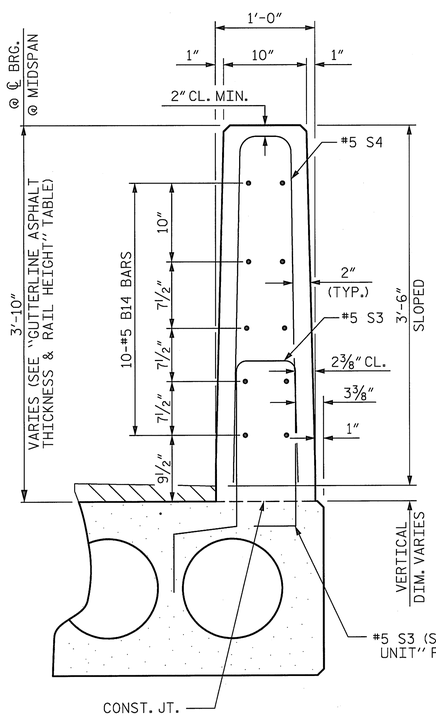

VERTICAL CONCRETE BARRIER RAIL SECTION

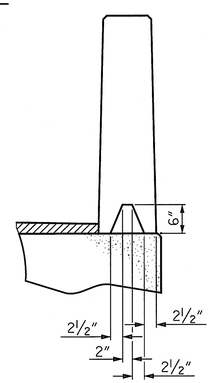

SECTION S-S
AT DAM IN OPEN JOINT
(THIS IS TO BE USED ONLY WHEN SLIP FORM IS USED)

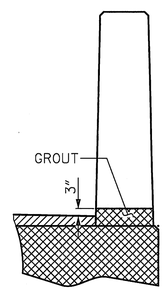

SECTION T-T
AT OPEN JOINT AT BENT
(THIS IS TO BE USED WHERE FOAM JOINT IS NOT USED)

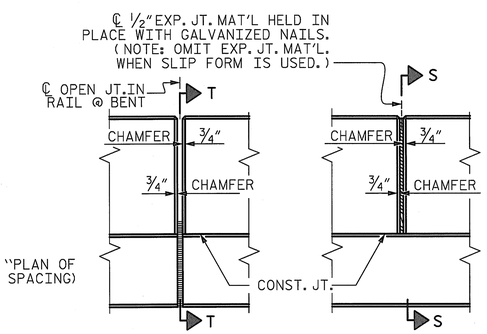

ELEVATION AT EXPANSION JOINTS

BILL OF MATERIAL FOR VERTICAL CONCRETE BARRIER RAIL						
BAR	BARS PER PAIR OF EXTERIOR UNITS	TOTAL NO.	SIZE	TYPE	LENGTH	WEIGHT
	55' UNIT					
✱B14	80	80	#5	STR	15'-6"	1293
✱ S4	128	128	#5	2	7'-2"	957
✱ EPOXY COATED REINFORCING STEEL				LBS.		2250
CLASS AA CONCRETE				CU.YDS.		14.4
TOTAL VERTICAL CONCRETE BARRIER RAIL				LN. FT.		110.29

DEAD LOAD DEFLECTION AND CAMBER	
	3'-0" x 1'-9"
55' CORED SLAB UNIT	0.6"Ø L.R. STRAND
CAMBER (SLAB ALONE IN PLACE)	2½" ↑
DEFLECTION DUE TO SUPERIMPOSED DEAD LOAD✱✱	¼" ↓
FINAL CAMBER	2¼" ↑

✱✱ INCLUDES FUTURE WEARING SURFACE

CORED SLABS REQUIRED			
	NUMBER	LENGTH	TOTAL LENGTH
55' UNIT			
EXTERIOR C.S.	2	55'-0"	110'-0"
INTERIOR C.S.	8	55'-0"	440'-0"
TOTAL	10		550'-0"

GUTTERLINE ASPHALT THICKNESS & RAIL HEIGHT		
27'-10" CLEAR ROADWAY	ASPHALT OVERLAY THICKNESS	RAIL HEIGHT
	@ MID-SPAN	@ MID-SPAN
	NORMAL CROWN SECTION	
55' UNITS	1½"	3'-7¾"

BILL OF MATERIAL FOR ONE 55' CORED SLAB UNIT							
				EXTERIOR UNIT		INTERIOR UNIT	
BAR	NUMBER	SIZE	TYPE	LENGTH	WEIGHT	LENGTH	WEIGHT
B7	4	#4	STR	28'-3"	75	28'-3"	75
S1	8	#5	3	4'-6"	38	4'-6"	38
S2	112	#4	3	5'-4"	399	5'-4"	399
✱ S3	64	#5	1	6'-2"	412		
S5	4	#4	3	5'-5"	14	5'-5"	14
S6	4	#4	3	5'-6"	15	5'-6"	15
S7	4	#4	3	5'-7"	15	5'-7"	15
S8	4	#4	3	5'-9"	15	5'-9"	15
REINFORCING STEEL			LBS.		571		571
✱ EPOXY COATED REINFORCING STEEL			LBS.		412		
6500 P.S.I. CONCRETE			CU. YDS.		8.0		8.0
0.6"Ø L.R. STRANDS			No.		19		19

PROJECT NO. 17BP.10.R.43
ANSON COUNTY
STATION: 14+08.70 -L-

SHEET 3 OF 3

STATE OF NORTH CAROLINA
DEPARTMENT OF TRANSPORTATION
RALEIGH

STANDARD
3'-0" X 1'-9"
PRESTRESSED CONCRETE
CORED SLAB UNIT
120° SKEW

ASSEMBLED BY : L.M. SAMPLES	DATE : 11/07/12
CHECKED BY : J.M. KEPICH	DATE : 11/08/12
DRAWN BY : DGE 5/09	REV. 12/11 MAA/AAC
CHECKED BY : BCH 6/09	

PLANS PREPARED BY:
Gannett Fleming
RALEIGH, NORTH CAROLINA

THESE PLANS HAVE BEEN PROPERLY EXAMINED BY THE UNDERSIGNED. I HAVE DETERMINED THAT THEY COMPLY WITH EXISTING NORTH CAROLINA CODES, AND HAVE BEEN PROPERLY ADAPTED FOR USE IN THIS AREA.

NORTH CAROLINA PROFESSIONAL SEAL 037180 ENGINEER RICHARD F. WERTMAN 2-1-13

REVISIONS						SHEET NO.
NO.	BY:	DATE:	NO.	BY:	DATE:	S-7
1			3			TOTAL SHEETS
2			4			14

STD. NO. 21" PCS3_30_120S

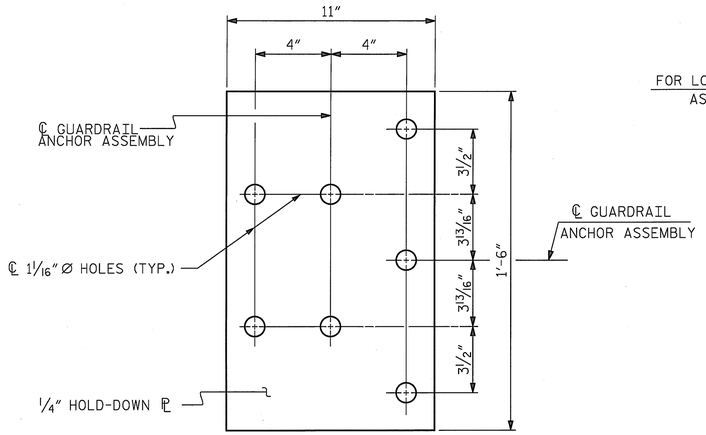

PLAN

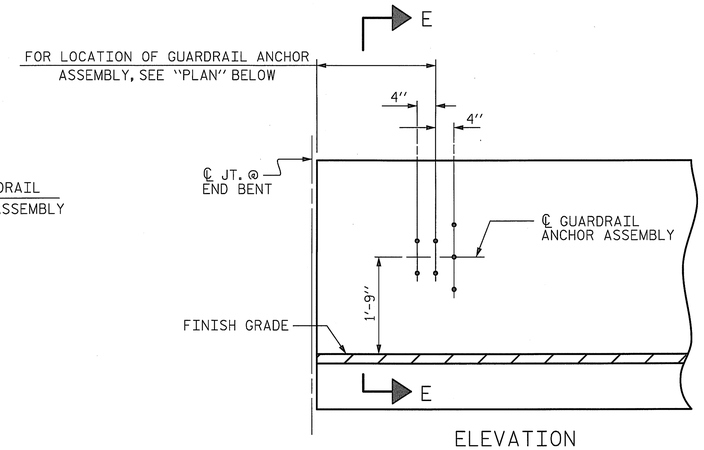

ELEVATION

NOTES

THE GUARDRAIL ANCHOR ASSEMBLY SHALL CONSIST OF A 1/4" HOLD DOWN PLATE AND 7 - 7/8" Ø BOLTS WITH NUTS AND WASHERS.

THE HOLD-DOWN PLATE SHALL CONFORM TO AASHTO M270 GRADE 36. AFTER FABRICATION, THE HOLD-DOWN PLATE SHALL BE HOT-DIP GALVANIZED IN ACCORDANCE WITH AASHTO M111.

BOLTS SHALL CONFORM TO THE REQUIREMENTS OF ASTM A307 AND NUTS SHALL CONFORM TO THE REQUIREMENTS OF AASHTO M291. BOLTS, NUTS AND WASHERS SHALL BE GALVANIZED. (AT THE CONTRACTOR'S OPTION, STAINLESS STEEL BOLTS, NUTS AND WASHERS MAY BE USED AS AN ALTERNATE FOR THE 7/8" Ø GALVANIZED BOLTS, NUTS AND WASHERS. THEY SHALL CONFORM TO OR EXCEED THE MECHANICAL REQUIREMENTS OF ASTM A307. THE USE OF THIS ALTERNATE SHALL BE APPROVED BY THE ENGINEER.)

THE GUARDRAIL ANCHOR ASSEMBLY IS REQUIRED AT ALL POINTS WHERE APPROACH GUARDRAIL IS TO BE ATTACHED TO THE END OF BARRIER RAIL. FOR POINTS OF ATTACHMENT, SEE SKETCH.

AFTER INSTALLATION, THE EXPOSED THREAD OF THE BOLT SHALL BE BURRED WITH A SHARP POINTED TOOL.

THE COST OF THE GUARDRAIL ANCHOR ASSEMBLY SHALL BE INCLUDED IN THE UNIT CONTRACT PRICE BID FOR VERTICAL CONCRETE BARRIER RAIL.

THE VERTICAL REINFORCING BARS MAY BE SHIFTED SLIGHTLY IN THE VERTICAL CONCRETE BARRIER RAIL TO CLEAR ASSEMBLY BOLTS.

THE 1 1/4" Ø HOLES SHALL BE FORMED OR DRILLED WITH A CORE BIT. IMPACT TOOLS WILL NOT BE PERMITTED. ANY CONCRETE DAMAGED BY THIS WORK SHALL BE REPAIRED TO THE SATISFACTION OF THE ENGINEER.

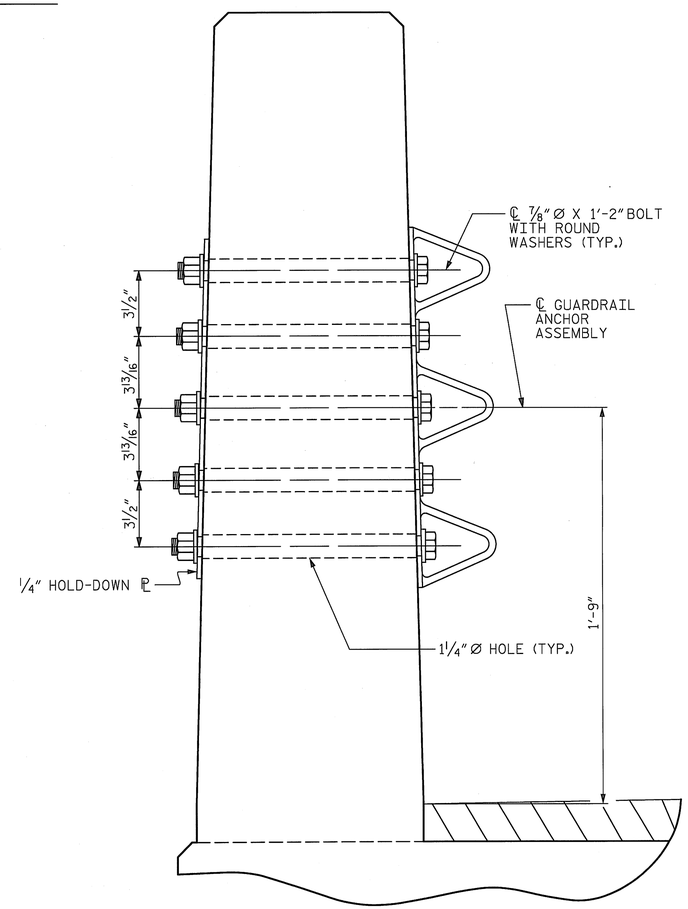

SECTION E-E

GUARDRAIL ANCHOR ASSEMBLY DETAILS

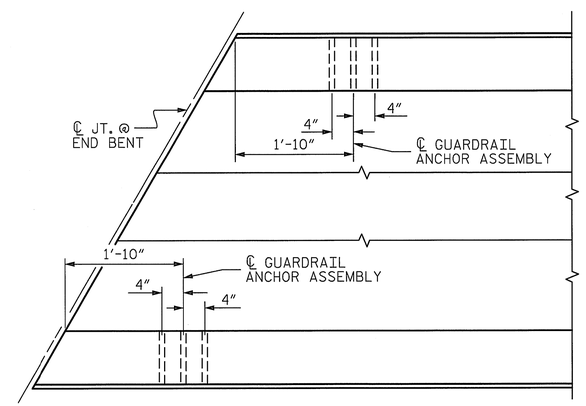

PLAN

LOCATION OF ANCHORS FOR GUARDRAIL

END BENT #1 SHOWN, END BENT #2 SIMILAR.

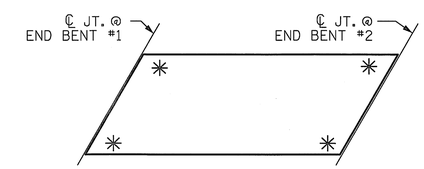

SKETCH SHOWING POINTS OF ATTACHMENT

✳ DENOTES GUARDRAIL ANCHOR ASSEMBLY

PROJECT NO. 17BP.10.R.43

ANSON COUNTY

STATION: 14+08.70 -L-

STATE OF NORTH CAROLINA
DEPARTMENT OF TRANSPORTATION
RALEIGH

STANDARD
GUARDRAIL ANCHORAGE FOR VERTICAL CONCRETE BARRIER RAIL

ASSEMBLED BY : L.M. SAMPLES	DATE : 11/07/12
CHECKED BY : J.M. KEPICH	DATE : 11/08/12
DRAWN BY : MAA 5/10	ADDED 5/6/10
CHECKED BY : GM 5/10	REV. 10/1/11 MAA/GM
	REV. 12/5/11 MAA/GM

PLANS PREPARED BY:
Gannett Fleming
RALEIGH, NORTH CAROLINA

THESE PLANS HAVE BEEN PROPERLY EXAMINED BY THE UNDERSIGNED. I HAVE DETERMINED THAT THEY COMPLY WITH EXISTING NORTH CAROLINA CODES, AND HAVE BEEN PROPERLY ADAPTED FOR USE IN THIS AREA.

NORTH CAROLINA PROFESSIONAL SEAL 037180 ENGINEER RICHARD F. WERTMAN

REVISIONS						
NO.	BY:	DATE:	NO.	BY:	DATE:	
1			3			
2			4			

SHEET NO. S-8
TOTAL SHEETS 14

STD. NO. GRA3

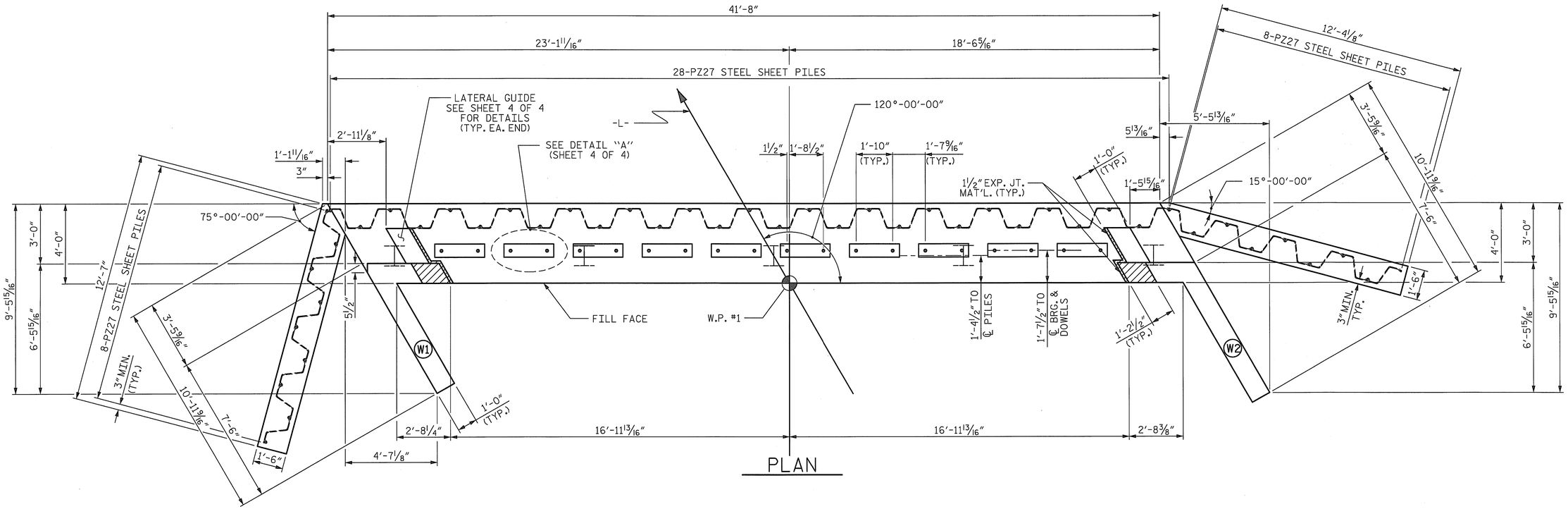

PLAN

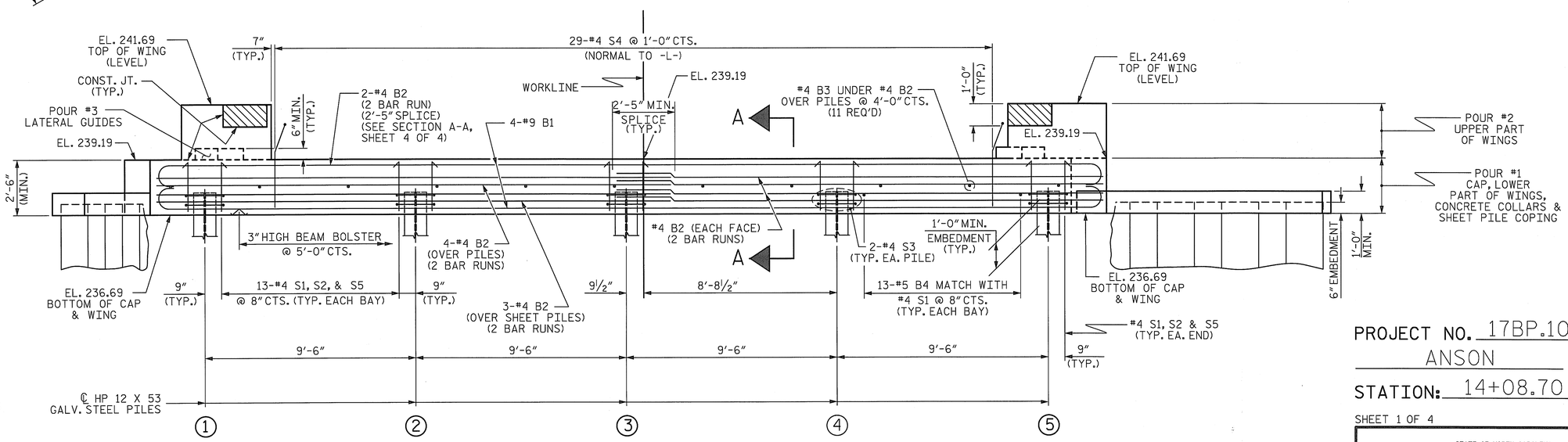

ELEVATION

WINGS NOT SHOWN FOR CLARITY.
FOR SECTION A-A, SEE SHEET 4 OF 4.
CONCRETE COLLARS FOR STEEL PILES NOT SHOWN IN PLAN AND ELEVATION VIEWS FOR CLARITY.
SEE "CORROSION PROTECTION FOR STEEL PILES DETAIL", SHEET 4 OF 4.

NOTES

STIRRUPS IN CAP MAY BE SHIFTED AS NECESSARY TO CLEAR DOWELS.

THE LATERAL GUIDES ARE NOT TO BE POURED UNTIL AFTER THE CORED SLAB UNITS ARE IN PLACE.

THE CONCRETE IN THE SHADED AREA OF THE WING SHALL BE POURED AFTER THE VERTICAL CONCRETE BARRIER RAIL IS CAST IF SLIP FORMING IS USED.

FOR PILE SPLICE DETAILS, SEE SHEET 4 OF 4.

FOR WING DETAILS, SEE SHEET 3 OF 4.

THE CONTRACTOR HAS THE OPTION TO OMIT THE LATERAL GUIDE IF APPROVED BY THE ENGINEER.

DRAWN BY : L.M. SAMPLES DATE : 11/18/12
CHECKED BY : J.M. KEPICH DATE : 11/19/12

PLANS PREPARED BY:
Gannett Fleming
RALEIGH, NORTH CAROLINA

NORTH CAROLINA PROFESSIONAL SEAL 037180 ENGINEER RICHARD F. WERTMAN

PROJECT NO. 17BP.10.R.43
ANSON COUNTY
STATION: 14+08.70 -L-

SHEET 1 OF 4

STATE OF NORTH CAROLINA
DEPARTMENT OF TRANSPORTATION
RALEIGH

SUBSTRUCTURE

END BENT No. 1

REVISIONS						SHEET NO.
NO.	BY:	DATE:	NO.	BY:	DATE:	S-9
1			3			TOTAL SHEETS
2			4			14

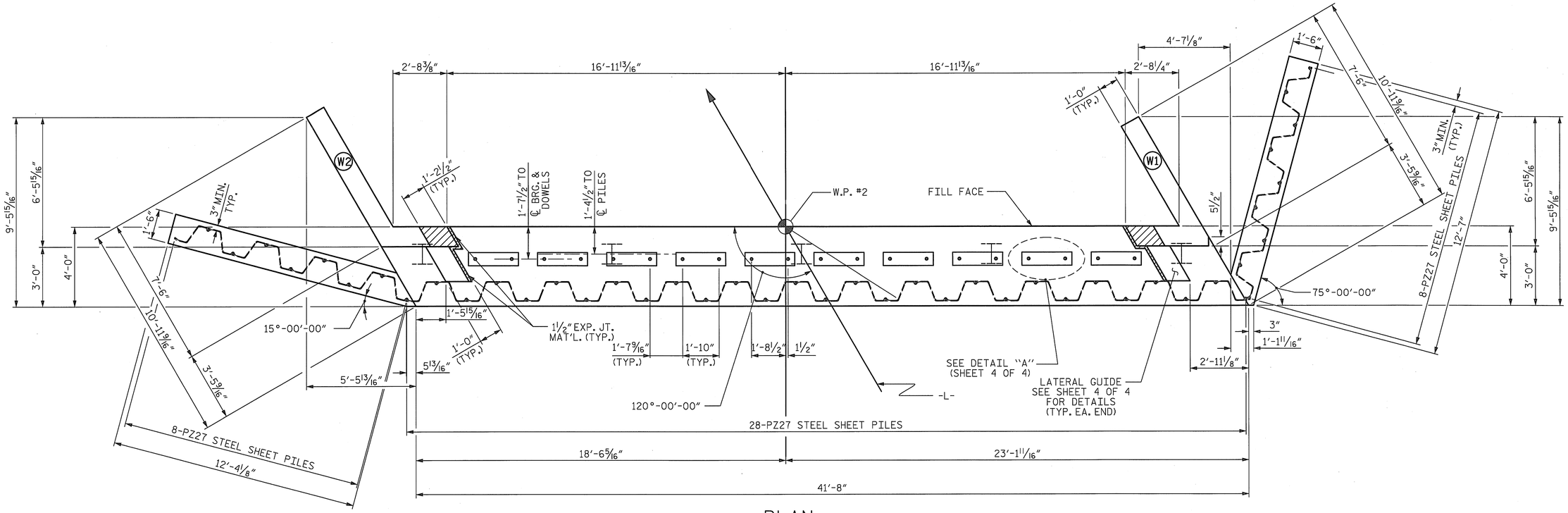

PLAN

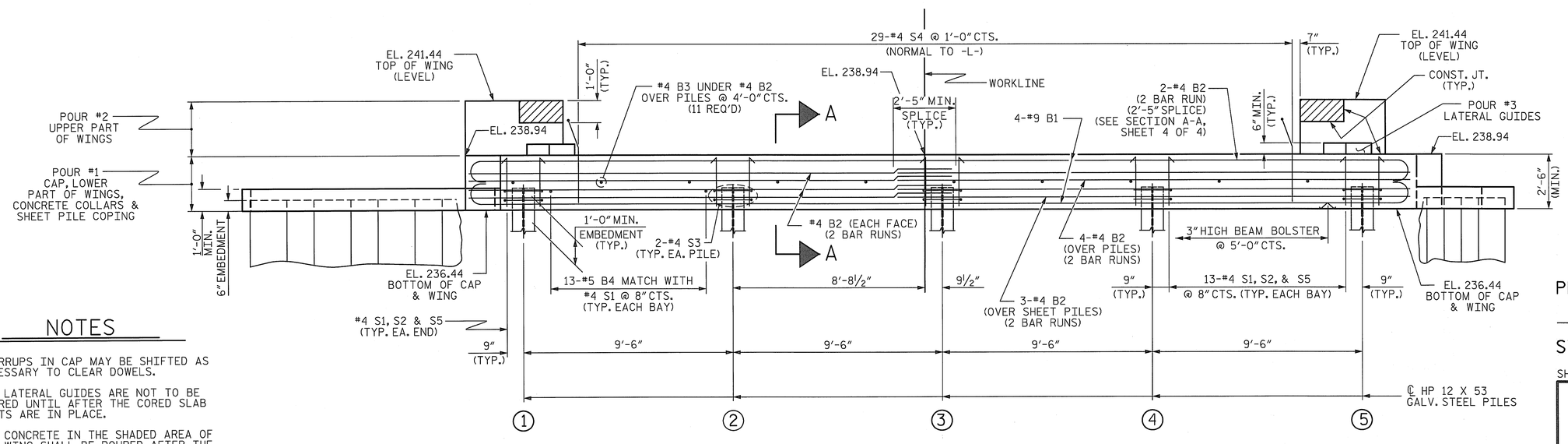

ELEVATION

WINGS NOT SHOWN FOR CLARITY.
FOR SECTION A-A, SEE SHEET 4 OF 4.
CONCRETE COLLARS FOR STEEL PILES NOT SHOWN IN PLAN AND ELEVATION VIEWS FOR CLARITY.
SEE "CORROSION PROTECTION FOR STEEL PILES DETAIL", SHEET 4 OF 4.

NOTES

STIRRUPS IN CAP MAY BE SHIFTED AS NECESSARY TO CLEAR DOWELS.

THE LATERAL GUIDES ARE NOT TO BE POURED UNTIL AFTER THE CORED SLAB UNITS ARE IN PLACE.

THE CONCRETE IN THE SHADED AREA OF THE WING SHALL BE POURED AFTER THE VERTICAL CONCRETE BARRIER RAIL IS CAST IF SLIP FORMING IS USED.

FOR PILE SPLICE DETAILS, SEE SHEET 4 OF 4.

FOR WING DETAILS, SEE SHEET 3 OF 4.

THE CONTRACTOR HAS THE OPTION TO OMIT THE LATERAL GUIDE IF APPROVED BY THE ENGINEER.

DRAWN BY : L.M. SAMPLES DATE : 11/18/12
CHECKED BY : J.M. KEPICH DATE : 11/19/12

PLANS PREPARED BY:
Gannett Fleming
RALEIGH, NORTH CAROLINA

NORTH CAROLINA PROFESSIONAL SEAL 037180 ENGINEER RICHARD F WERTMAN

PROJECT NO. 17BP.10.R.43
ANSON COUNTY
STATION: 14+08.70 -L-

SHEET 2 OF 4

STATE OF NORTH CAROLINA
DEPARTMENT OF TRANSPORTATION
RALEIGH

SUBSTRUCTURE

END BENT No. 2

REVISIONS								SHEET NO.
NO.	BY:	DATE:	NO.	BY:	DATE:			S-10
1			3					TOTAL SHEETS
2			4					14

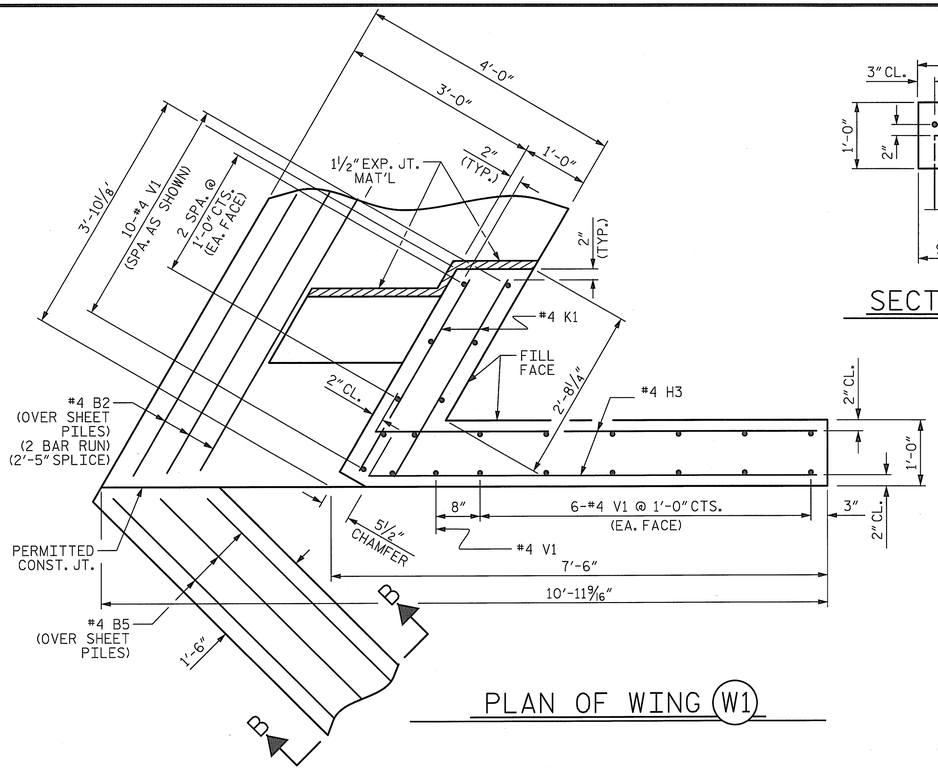

PLAN OF WING (W1)

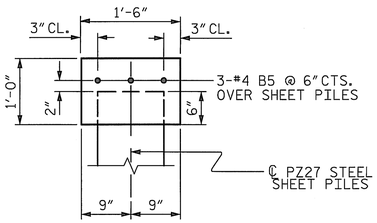

SECTION B-B

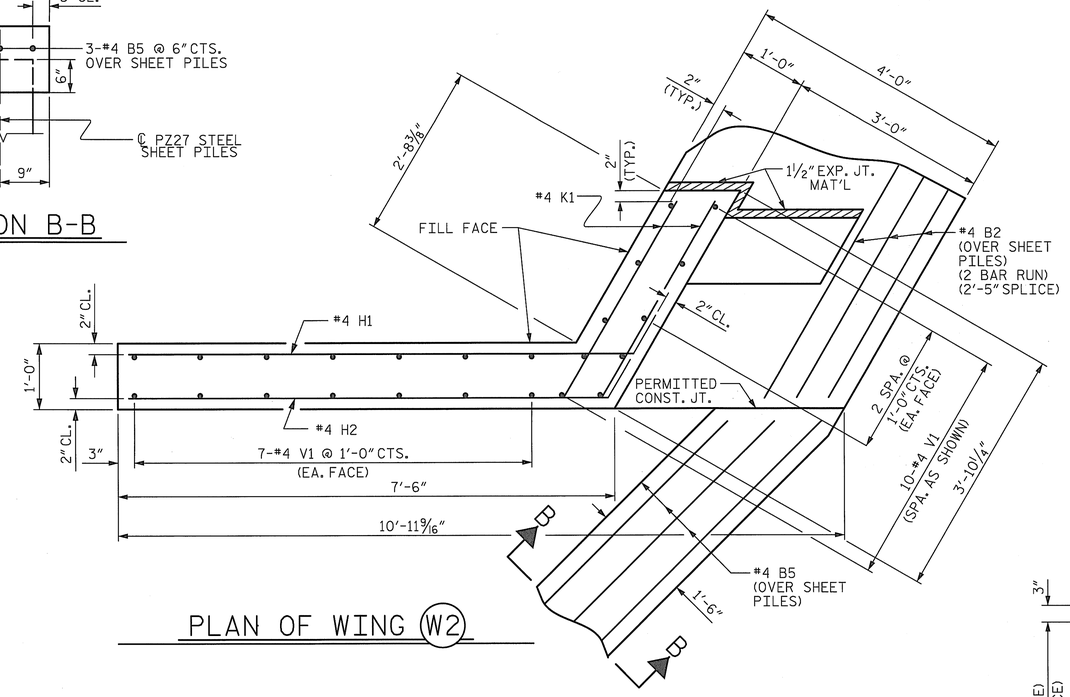

PLAN OF WING (W2)

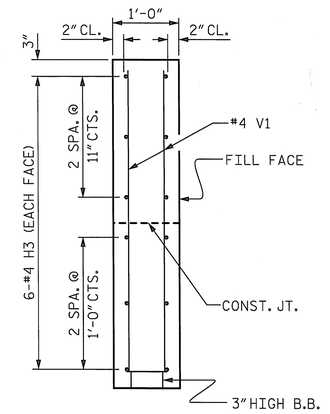

SECTION X-X

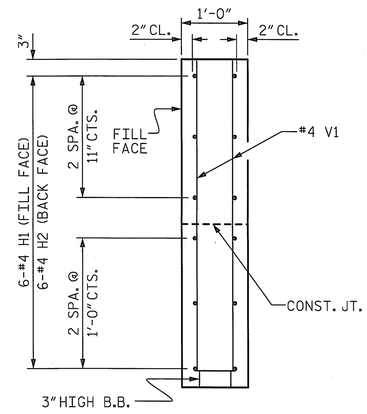

SECTION Y-Y

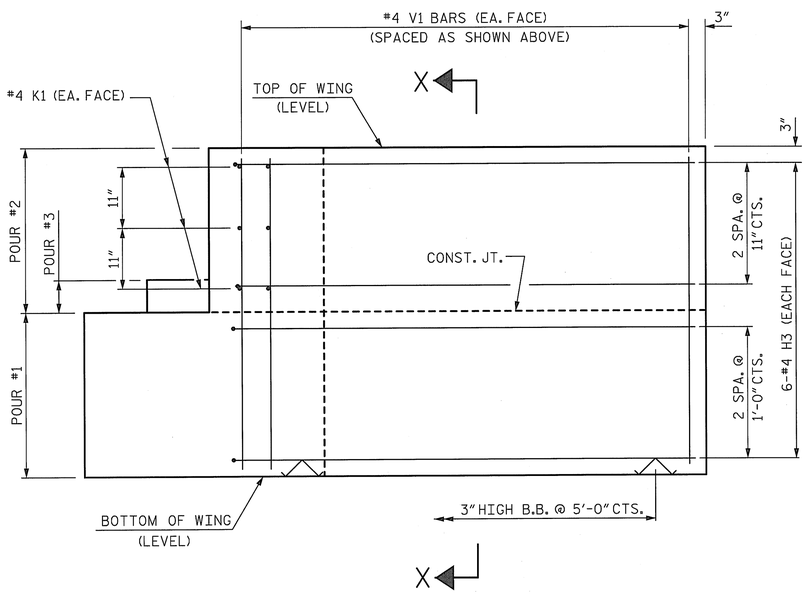

ELEVATION OF WING (W1)

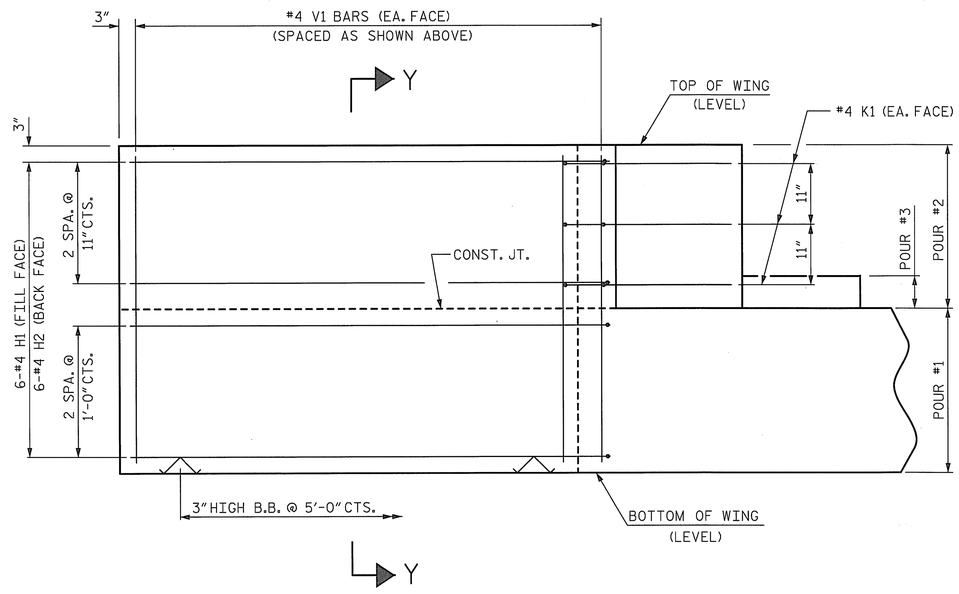

ELEVATION OF WING (W2)

WING DETAILS

PROJECT NO. 17BP.10.R.43

ANSON COUNTY

STATION: 14+08.70 -L-

SHEET 3 OF 4

STATE OF NORTH CAROLINA
DEPARTMENT OF TRANSPORTATION
RALEIGH

SUBSTRUCTURE
END BENT
WING DETAILS

PLANS PREPARED BY:
Gannett Fleming
RALEIGH, NORTH CAROLINA

NORTH CAROLINA PROFESSIONAL SEAL 037180 ENGINEER RICHARD F. WERTMAN

REVISIONS								SHEET NO.
NO.	BY:	DATE:	NO.	BY:	DATE:			S-11
1			3					TOTAL SHEETS
2			4					14

DRAWN BY : L.M. SAMPLES DATE : 11/14/12
CHECKED BY : J.M. KEPICH DATE : 11/19/12

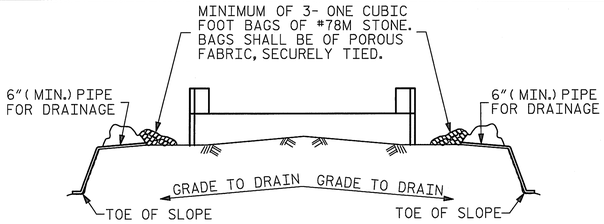

BAGGED STONE AND PIPE SHALL BE PLACED IMMEDIATELY AFTER COMPLETION OF END BENT EXCAVATION. PIPE MAY BE EITHER CONCRETE, CORRUGATED STEEL, CORRUGATED ALUMINUM ALLOY, OR CORRUGATED PLASTIC. PERFORATED PIPE WILL NOT BE ALLOWED.

BAGGED STONE SHALL REMAIN IN PLACE UNTIL THE ENGINEER DIRECTS THAT IT BE REMOVED. THE CONTRACTOR SHALL REMOVE AND DISPOSE OF SILT ACCUMULATIONS AT BAGGED STONE WHEN SO DIRECTED BY THE ENGINEER. BAGS SHALL BE REMOVED AND REPLACED WHENEVER THE ENGINEER DETERMINES THAT THEY HAVE DETERIORATED AND LOST THEIR EFFECTIVENESS.

NO SEPARATE PAYMENT WILL BE MADE FOR THIS WORK AND THE ENTIRE COST OF THIS WORK SHALL BE INCLUDED IN THE UNIT CONTRACT PRICE BID FOR THE SEVERAL PAY ITEMS.

TEMPORARY DRAINAGE AT END BENT

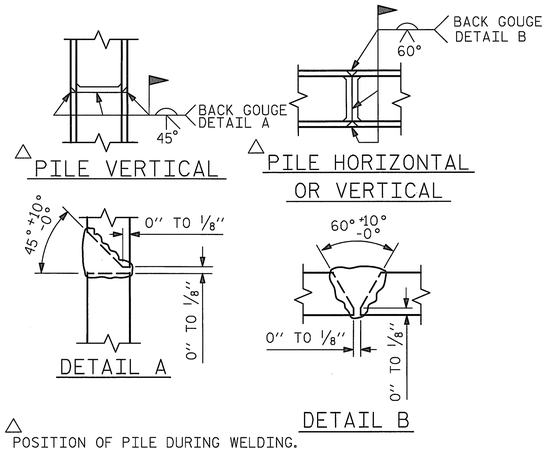

PILE SPLICE DETAILS

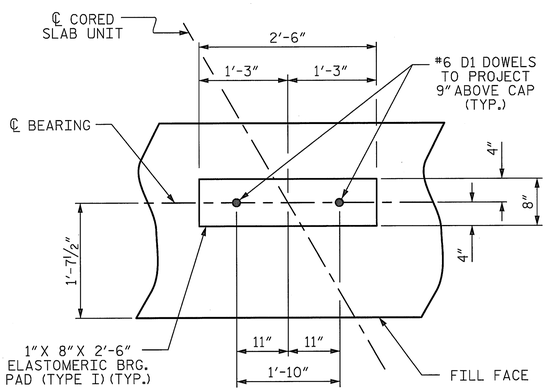

DETAIL "A"

(END BENT No. 1 SHOWN, END BENT No. 2 SIMILAR BY ROTATION)

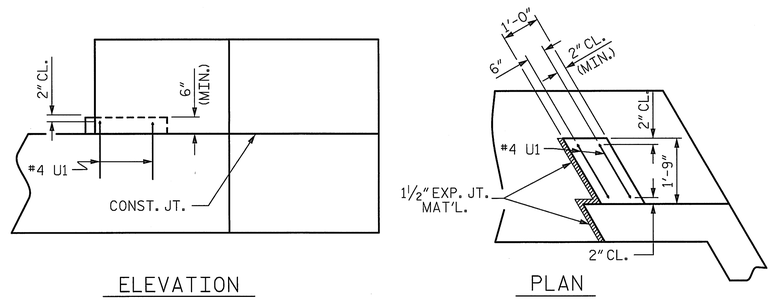

LATERAL GUIDE DETAILS

(END BENT No. 1, RIGHT LATERAL GUIDE SHOWN, LEFT END SIMILAR)
(END BENT No. 2 SIMILAR BY ROTATION)

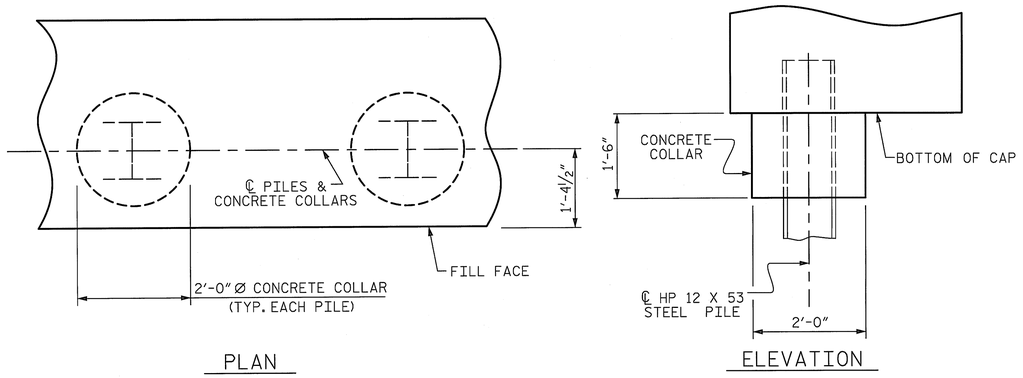

CORROSION PROTECTION FOR STEEL PILES DETAIL

(END BENT No. 1 SHOWN, END BENT No. 2 SIMILAR BY ROTATION)

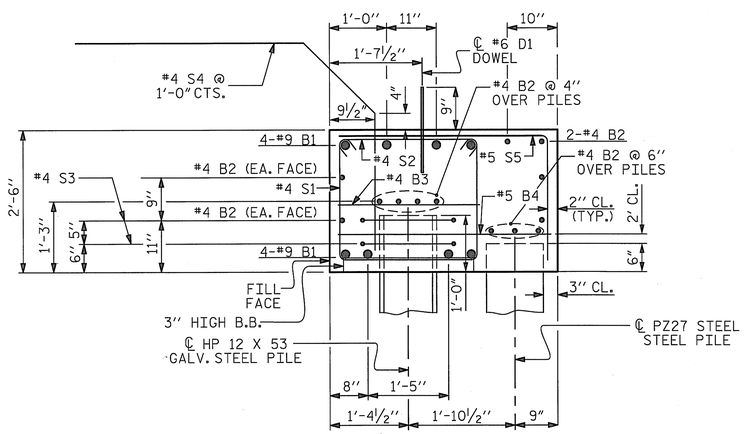

SECTION A-A

(CONCRETE COLLAR NOT SHOWN FOR CLARITY.
SEE "CORROSION PROTECTION FOR STEEL PILES DETAIL.")

BAR TYPES

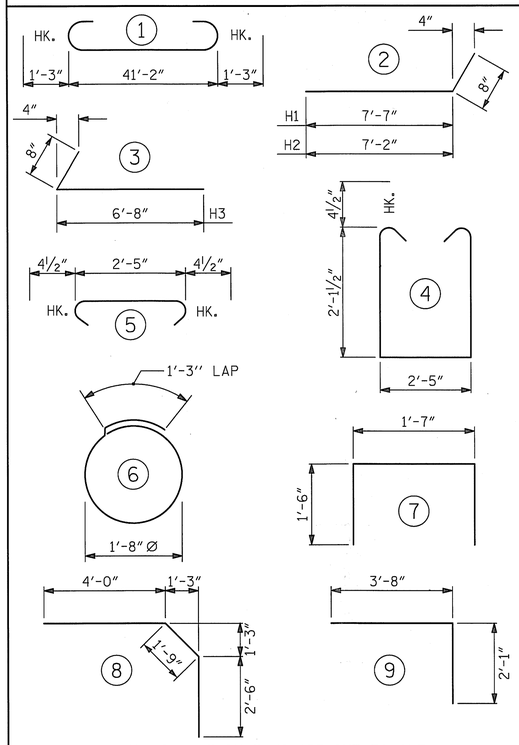

ALL BAR DIMENSIONS ARE OUT TO OUT.

BILL OF MATERIAL
FOR ONE END BENT

BAR	NO.	SIZE	TYPE	LENGTH	WEIGHT
B1	8	#9	1	43'-8"	1188
B2	26	#4	STR	21'-11"	381
B3	11	#4	STR	2'-5"	18
B4	52	#5	STR	3'-8"	199
B5	6	#4	STR	11'-3"	45
D1	20	#6	STR	1'-6"	45
H1	6	#4	2	8'-3"	33
H2	6	#4	2	7'-10"	31
H3	12	#4	3	7'-4"	59
K1	12	#4	STR	3'-3"	26
S1	54	#4	4	7'-5"	268
S2	54	#4	5	3'-2"	114
S3	10	#4	6	6'-6"	43
✱S4	29	#4	8	8'-3"	160
S5	54	#5	9	5'-9"	324
U1	4	#4	7	4'-7"	12
V1	47	#4	STR	4'-8"	147

REINFORCING STEEL (FOR ONE END BENT) 2933 LBS.
✱EPOXY COATED REINFORCING STEEL (FOR ONE END BENT) 160 LBS.

CLASS A CONCRETE BREAKDOWN (FOR ONE END BENT)

POUR #1	CAP, LOWER PART OF WINGS, COLLARS, & COPING	18.8 C.Y.
POUR #2	UPPER PART OF WINGS	1.9 C.Y.
POUR #3	LATERAL GUIDES	0.1 C.Y.
TOTAL CLASS A CONCRETE		20.8 C.Y.

END BENT No. 1
HP 12 X 53 GALV. STEEL PILES
NO: 5 LIN. FT.= 175

18" STEEL SHEET PILES
PZ27 NO.= 44
PZ90 NO.= 1
SQ.FT.=903.5

END BENT No. 2
HP GALV. 12 X 53 STEEL PILES
NO: 5 LIN. FT.= 175

18" STEEL SHEET PILES
PZ27 NO.= 44
PZ90 NO.= 1
SQ.FT.=887.0

PROJECT NO. 17BP.10.R.43
ANSON COUNTY
STATION: 14+08.70 -L-

SHEET 4 OF 4

STATE OF NORTH CAROLINA
DEPARTMENT OF TRANSPORTATION
RALEIGH

SUBSTRUCTURE

END BENT No. 1 & 2 DETAILS

PLANS PREPARED BY:
Gannett Fleming
RALEIGH, NORTH CAROLINA

NORTH CAROLINA PROFESSIONAL SEAL 037180 ENGINEER RICHARD F. WERTMAN

REVISIONS								SHEET NO.
NO.	BY:	DATE:	NO.	BY:	DATE:			S-12
1			3					TOTAL SHEETS
2			4					14

DRAWN BY : L.M. SAMPLES DATE : 11/16/12
CHECKED BY : J.M. KEPICH DATE : 11/19/12

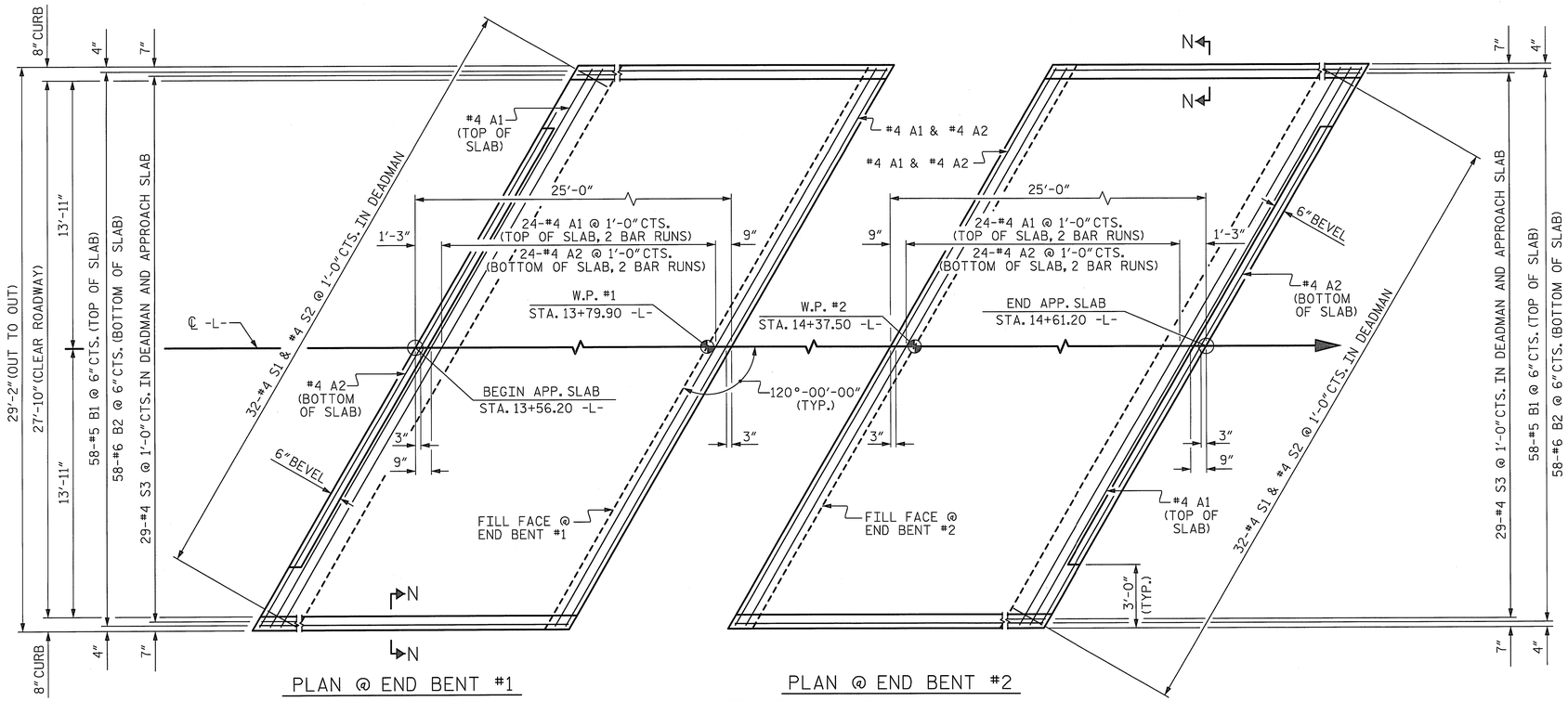

DIMENSIONS SHOWN ARE TYPICAL FOR BOTH APPROACH SLABS
"B3" & "B4" BARS IN DEADMAN NOT SHOWN FOR CLARITY

BAR TYPES

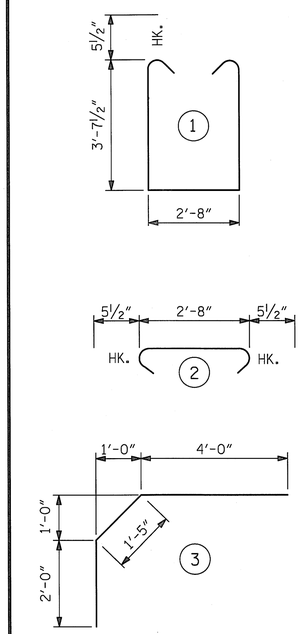

ALL BAR DIMENSIONS ARE OUT TO OUT

BILL OF MATERIAL

APPROACH SLAB AT EB #1

BAR	NO.	SIZE	TYPE	LENGTH	WEIGHT
* A1	52	#4	STR	17'-8"	614
A2	52	#4	STR	17'-7"	611
* B1	58	#5	STR	24'-0"	1452
B2	58	#6	STR	24'-6"	2134
B3	16	#6	STR	18'-0"	433
B4	8	#4	STR	17'-7"	94
S1	32	#5	1	10'-10"	362
S2	32	#5	2	3'-7"	120
* S3	29	#4	3	7'-5"	144
REINFORCING STEEL				LBS.	3754
* EPOXY COATED REINFORCING STEEL				LBS.	2210

CLASS AA CONCRETE BREAKDOWN

POUR 1	DEADMAN	C.Y.	15.0
POUR 2	APPROACH SLAB	C.Y.	33.4
TOTAL CLASS AA CONCRETE		C.Y.	48.4

APPROACH SLAB AT EB #2

BAR	NO.	SIZE	TYPE	LENGTH	WEIGHT
* A1	52	#4	STR	17'-8"	614
A2	52	#4	STR	17'-7"	611
* B1	58	#5	STR	24'-0"	1452
B2	58	#6	STR	24'-6"	2134
B3	16	#6	STR	18'-0"	433
B4	8	#4	STR	17'-7"	94
S1	32	#5	1	10'-10"	362
S2	32	#5	2	3'-7"	120
* S3	29	#4	3	7'-5"	144
REINFORCING STEEL				LBS.	3754
* EPOXY COATED REINFORCING STEEL				LBS.	2210

CLASS AA CONCRETE BREAKDOWN

POUR 1	DEADMAN	C.Y.	15.0
POUR 2	APPROACH SLAB	C.Y.	33.4
TOTAL CLASS AA CONCRETE		C.Y.	48.4

SPLICE LENGTHS

BAR SIZE	EPOXY COATED	UNCOATED
#4	2'-0"	1'-9"
#5	2'-6"	2'-2"
#6	3'-10"	2'-7"

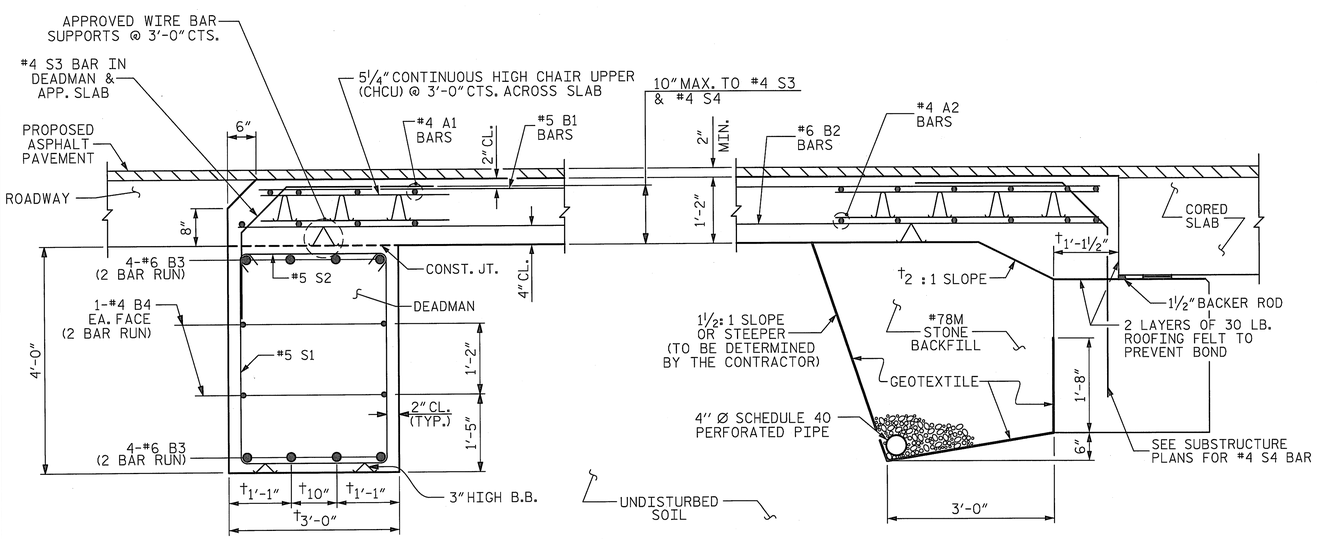

† NORMAL TO END BENT

SECTION THRU SLAB

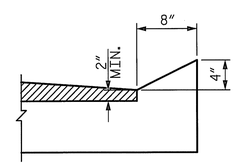

SECTION N-N

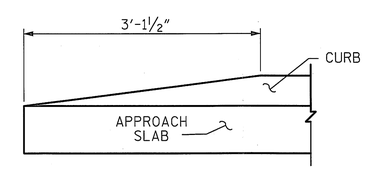

END OF CURB WITHOUT SHOULDER BERM GUTTER

CURB DETAILS

PROJECT NO. 17BP.10.R.43

ANSON COUNTY

STATION: 14+08.70 -L-

SHEET 1 OF 2

STATE OF NORTH CAROLINA
DEPARTMENT OF TRANSPORTATION
RALEIGH

BRIDGE APPROACH SLAB
FOR PRESTRESSED CONCRETE
CORED SLAB
(SUB-REGIONAL TIER)
120° SKEW

PLANS PREPARED BY:
Gannett Fleming
RALEIGH, NORTH CAROLINA

NORTH CAROLINA PROFESSIONAL SEAL 037180 ENGINEER RICHARD F. WERTMAN

REVISIONS								SHEET NO.
NO.	BY:	DATE:	NO.	BY:	DATE:			S-13
1			3					TOTAL SHEETS
2			4					14

DRAWN BY : L.M. SAMPLES DATE : 11/09/12
CHECKED BY : J.M. KEPICH DATE : 11/09/12

FILE: k:\055335 Anson Co.BRP\Structure 244\030244\Structures\030244_SD_AS_244.dgn
DATE: 12-Nov-2012 09:40

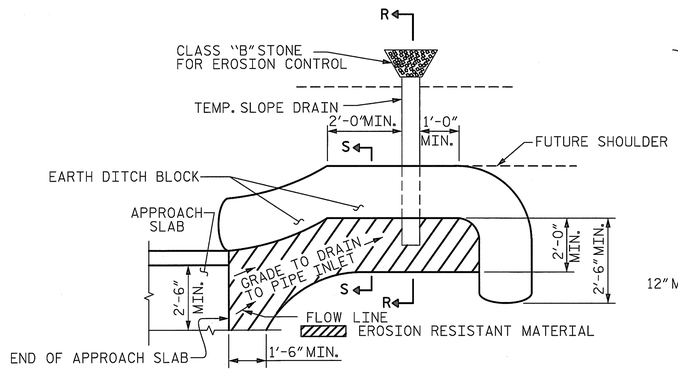

NOTE: IMMEDIATELY AFTER THE CONSTRUCTION OF THE APPROACH SLAB, THE CONTRACTOR SHALL PROVIDE TEMPORARY BERM AND SLOPE DRAIN. CONTRACTOR SHALL GRADE TO PIPE INLET AND PROVIDE EROSION RESISTANT MATERIAL AS SHOWN. THE EROSION RESISTANT MATERIAL SHALL BE EITHER 1) ASPHALT PLANT MIX, TYPE 1 OR TYPE 2, MIN. 2" DEPTH, 2) EROSION CONTROL MAT, OR 3) CONCRETE, AS DIRECTED BY THE ENGINEER. THE SLOPE DRAIN SHALL CONSIST OF A NON-PERFORATED TEMPORARY DRAINAGE PIPE, 12 INCHES IN DIAMETER.

PLAN VIEW

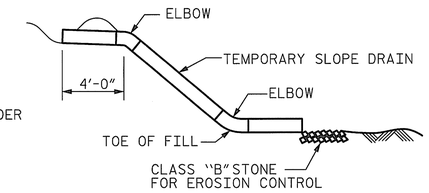

SECTION R-R

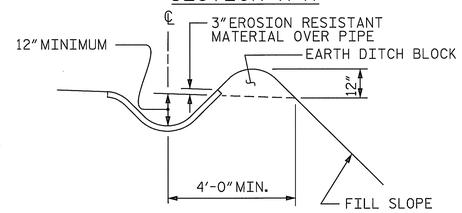

SECTION S-S

TEMPORARY BERM AND SLOPE DRAIN DETAILS

(TO BE USED WHEN SHOULDER BERM GUTTER IS REQUIRED)

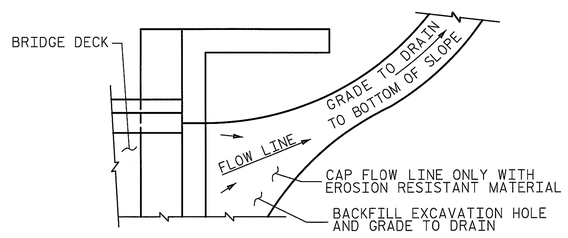

NOTE: IF THE APPROACH SLAB IS NOT CONSTRUCTED IMMEDIATELY AFTER THE BACKFILLING OF THE END BENT EXCAVATION, GRADE TO DRAIN TO THE BOTTOM OF THE SLOPE AND PROVIDE EROSION RESISTANT MATERIAL, SUCH AS FIBERGLASS ROVING OR AS DIRECTED BY THE ENGINEER TO PREVENT SOIL EROSION AND TO PROTECT THE AREA ADJACENT TO THE STRUCTURE. THE CONTRACTOR WILL BE REQUIRED TO REMOVE THESE MATERIALS PRIOR TO CONSTRUCTION OF THE APPROACH SLAB.

TEMPORARY DRAINAGE DETAIL

NOTES

FOR BRIDGE APPROACH FILL INCLUDING GEOTEXTILE, 4" Ø DRAINAGE PIPE, AND #78M STONE BACKFILL, SEE ROADWAY PLANS.

GEOTEXTILE SHALL BE TYPE 1 IN ACCORDANCE WITH THE STANDARD SPECIFICATIONS SECTION 1056.

#78M STONE BACKFILL (CLASS V SELECT MATERIAL) SHALL BE IN ACCORDANCE WITH STANDARD SPECIFICATIONS SECTION 1016.

#78M STONE BACKFILL IS TO BE CONTINUOUS ALONG FILL FACE OF BACKWALL FROM OUTSIDE EDGE TO OUTSIDE EDGE OF APPROACH SLAB.

FOR THE 4" Ø DRAINAGE PIPE OUTLET(S), SEE ROADWAY STANDARD DRAWINGS.

AREA BETWEEN THE WINGWALL AND APPROACH SLAB SHALL BE GRADED TO DRAIN THE WATER AWAY FROM THE FILL FACE OF THE BRIDGE AND SHALL BE PAVED. SEE ROADWAY PLANS.

APPROACH SLAB GROOVING IS NOT REQUIRED.

PROJECT NO. 17BP.10.R.43

ANSON COUNTY

STATION: 14+08.70 -L-

SHEET 2 OF 2

STATE OF NORTH CAROLINA
DEPARTMENT OF TRANSPORTATION
RALEIGH

BRIDGE APPROACH SLAB
FOR PRESTRESSED CONCRETE
CORED SLAB
(SUB-REGIONAL TIER)
120° SKEW

REVISIONS								SHEET NO.
NO.	BY:	DATE:	NO.	BY:	DATE:			S-14
1			3					TOTAL SHEETS
2			4					14

PLANS PREPARED BY:

Gannett Fleming
RALEIGH, NORTH CAROLINA

NORTH CAROLINA PROFESSIONAL SEAL 037180 ENGINEER RICHARD F. WERTMAN

DRAWN BY : L.M. SAMPLES DATE : 11/09/12
CHECKED BY : J.M. KEPICH DATE : 11/12/12

FILE: K:\055335 Anson Co. BRP\Structure 244\030244\Structures\030244_SD_AS_244.dgn
DATE: 11-Nov-2012 17:25