TIP:W-5710AB

PROJECT: 44856.3.28

STATE	STATE PROJECT REFERENCE NO.	SHEET NO.	TOTAL SHEETS
N.C.	44856.3.28	1	

STATE PROJ. NO.	F.A. PROJ. NO.	DESCRIPTION
44856.1.28	HSIP-1542(012)	P.E.
44856.2.28	HSIP-1542(012)	R/W
44856.3.28	HSIP-1542(012)	CONST.

STATE OF NORTH CAROLINA
DIVISION OF HIGHWAYS
STANLY COUNTY

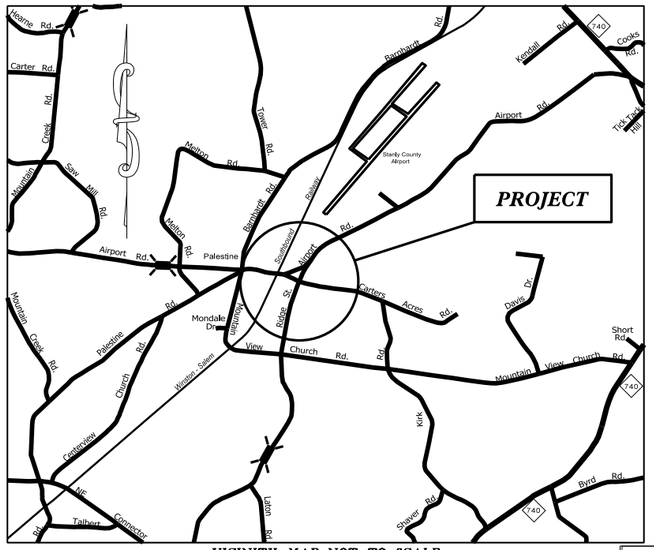

VICINITY MAP NOT TO SCALE

LOCATION: *INTERSECTION OF RIDGE ST. (SR-1542) AND CARTERS ACRES RD. (SR-1524)*

TYPE OF WORK: *GRADING, MILLING, PAVEMENT REMOVAL, PAVING, MONOLITHIC CONCRETE ISLANDS, AND THERMOPLASTIC PAVEMENT MARKINGS*

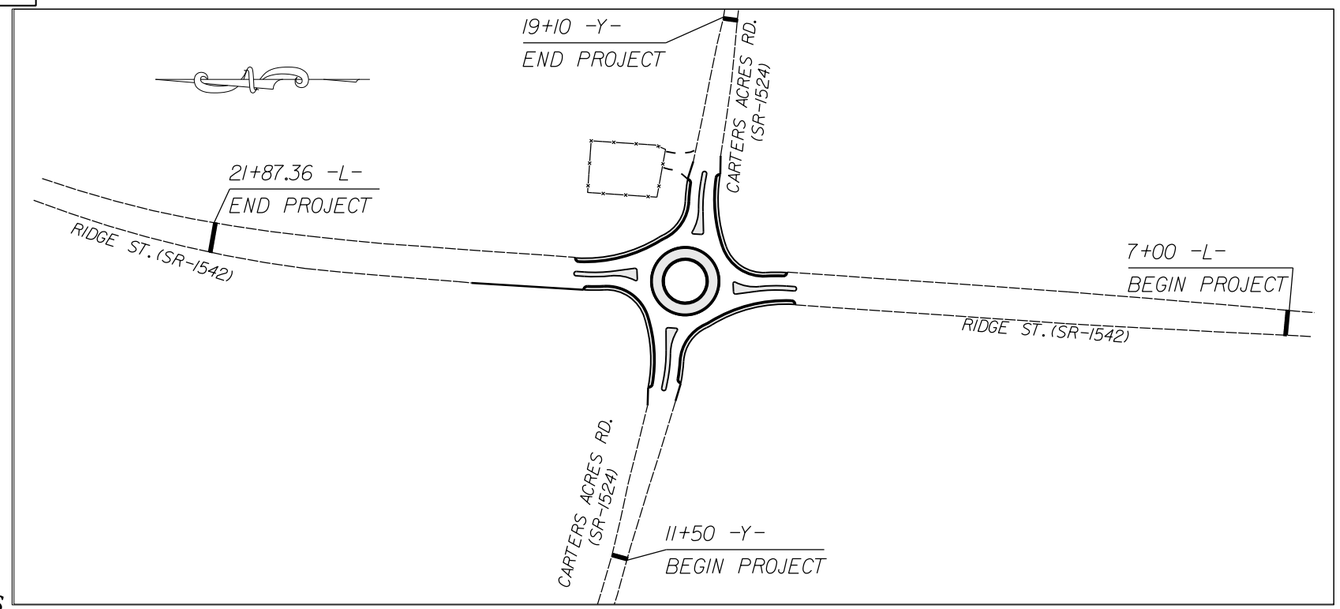

CLEARING ON THIS PROJECT SHALL BE TO THE LIMITS ESTABLISHED BY METHOD III AS DESCRIBED IN THE NCDOT STANDARD DRAWINGS

GRAPHIC SCALES

PLANS: 0 50 100

PROFILE (HORIZONTAL): 0 50 100

PROFILE (VERTICAL): 0 5 10

DESIGN DATA

ADT	=	
ADT	=	
DHV	=	%
D	=	%
T	=	%
V	=	MPH

PROJECT LENGTH

LENGTH OF ROADWAY PROJECT 44856.3.28	= 0.43	MILES
TOTAL LENGTH OF STATE PROJECT 44856.3.8	= 0.43	MILES

Prepared In the Office of:

DIVISION OF HIGHWAYS

DIVISION TEN

DIVISION DESIGN / CONSTRUCT UNIT

2018 STANDARD SPECIFICATIONS

RIGHT OF WAY DATE:

LETTING DATE: May 5, 2021

DONALD HARWARD
PROJECT ENGINEER

JASON BROOKS
PROJECT DESIGN ENGINEER

ROADWAY DESIGN ENGINEER

NORTH CAROLINA PROFESSIONAL SEAL 034357 ENGINEER SEAN MICHAEL EPPERSON

DocuSigned by:

A92E75CC0FFB43B...

SIGNATURE

24-MAR-2021 06:49
S:\DDC\RDY\Stanly\W-5710AB_Ridge St_ Car
jcbrooks AT DIV10-318330L

SURVEY CONTROL SHEET

PROJECT NO.	SHEET NO.
44856.3.28	1A
F.A. PROJECT NO.	HSIP-1542(012)

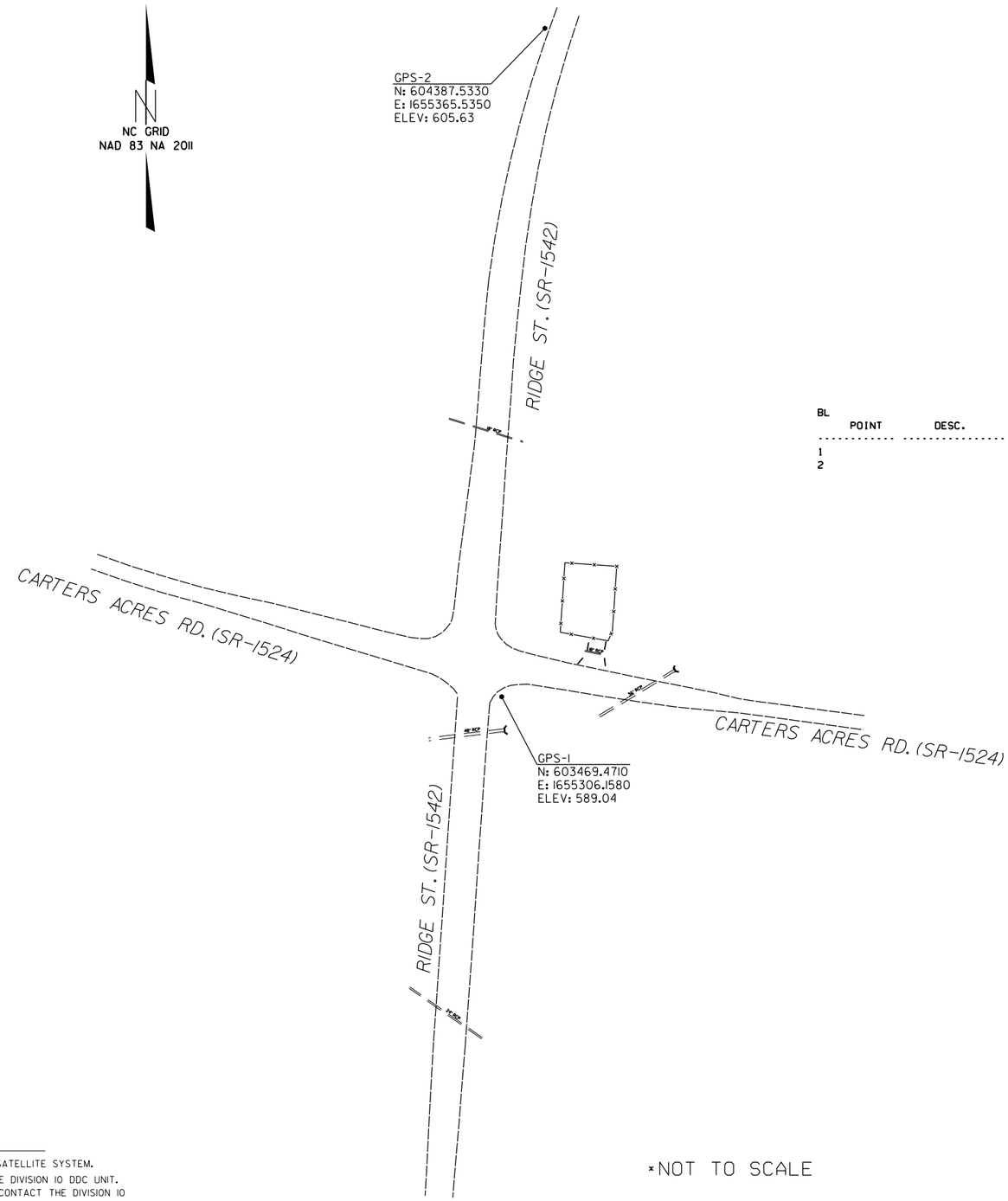

BL

POINT	DESC.	NORTH	EAST	ELEVATION	L STATION	OFFSET
1		603469.4710	1655306.1580	589.04	14+84.74	38.60 RT
2		604387.5330	1655365.5350	605.63	24+03.79	22.61 LT

DATUM DESCRIPTION

THE LOCALIZED COORDINATE SYSTEM DEVELOPED FOR THIS PROJECT IS BASED ON THE STATE PLANE COORDINATES ESTABLISHED BY NCDOT FOR MONUMENT "BL-1"
WITH NAD 83/NA 2011 STATE PLANE GRID COORDINATES OF
NORTHING: 603469.471(ft) EASTING: 1655306.158(ft)
ELEVATION: 589.04(ft)
THE AVERAGE COMBINED GRID FACTOR USED ON THIS PROJECT (GROUND TO GRID) IS: 0.99987604
THE N.C. LAMBERT GRID BEARING AND LOCALIZED HORIZONTAL GROUND DISTANCE FROM "BL-1" TO -L- STATION 7+00 IS
S 7° 47' 28" E 785.69'
ALL LINEAR DIMENSIONS ARE LOCALIZED HORIZONTAL DISTANCES
VERTICAL DATUM USED IS NAVD 88

*NOT TO SCALE

NOTES:

1. PROJECT CONTROL WAS ESTABLISHED USING GNSS, THE GLOBAL NAVIGATION SATELLITE SYSTEM.
2. THE SURVEY CONTROL DATA FOR THIS PROJECT HAS BEEN COMPILED BY THE DIVISION 10 DDC UNIT. IF FURTHER INFORMATION REGARDING PROJECT CONTROL IS NEEDED, PLEASE CONTACT THE DIVISION 10 DDC UNIT.

ROUNDABOUT AT THE INTERSECTION OF
RIDGE ST.(SR-1542) AND
CARTERS ACRES RD.(SR-1524)

		REVISIONS	
SCALE	N/A		
DATE	10-2019		
DWG. BY	JCB		
DESIGN BY	JCB		
APPROVED	JDH		

PROJECT NO.	SHEET NO.
44856.3.28	2
F.A. PROJECT NO. HSIP-1542(012)	

ROADWAY DESIGN ENGINEER

NORTH CAROLINA PROFESSIONAL SEAL 034357 ENGINEER SEAL MICHAEL J. SHEPHERD

DocuSigned by:

A92E75CC0FFB43B...

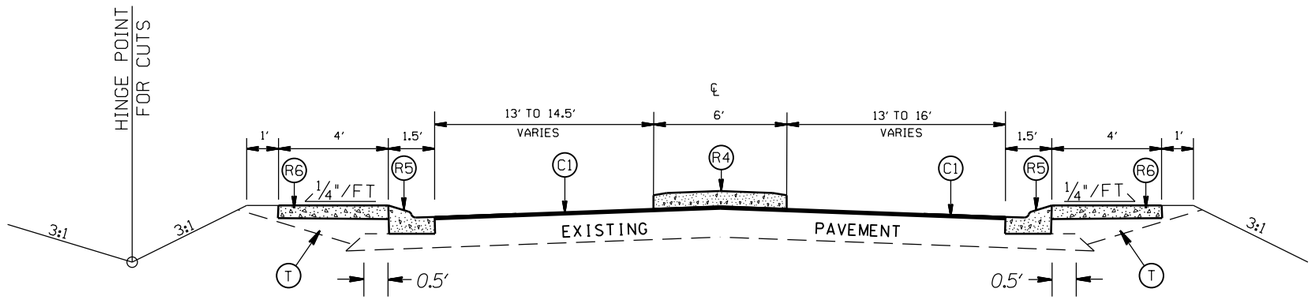

TYPICAL SECTION NO. 3

STA. 13+92.59 TO 14+06.20 -L-
STA. 16+35.84 TO 16+71.10 -L-
STA. 16+73.26 TO 16+81.57 -Y-

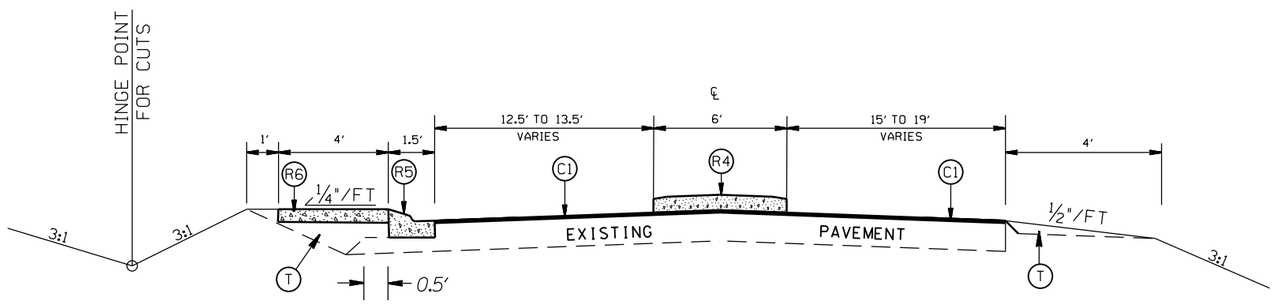

TYPICAL SECTION NO. 2

STA. 13+78.32 TO 13+92.59 -L-

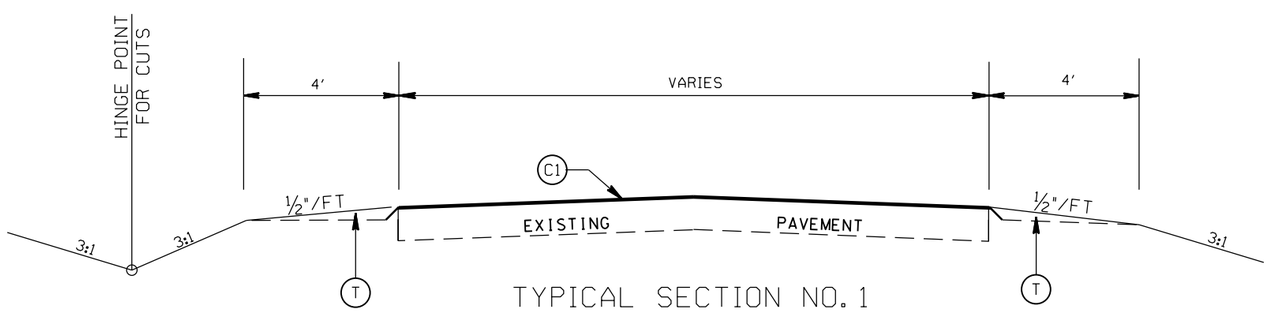

TYPICAL SECTION NO. 1

STA. 7+00.00 TO 13+78.32 -L-
STA. 16+85.40 TO 21+87.36 -L-
STA. 11+50.00 TO 13+63.79 -Y-
STA. 17+20.84 TO 19+10.00 -Y-

PAVEMENT SCHEDULE

C1	PROP. APPROX. 1½" ASPHALT CONC. SURFACE COURSE, TYPE S9.5B, AT AN AVERAGE RATE OF 168 LBS. PER SQ. YD.
C2	PROP. APPROX. 3" ASPHALT CONC. SURFACE COURSE, TYPE S9.5B, AT AN AVERAGE RATE OF 168 LBS. PER SQ. YD. IN EACH OF TWO LAYERS.
D1	PROP. APPROX. 4" ASPHALT CONC. INTERMEDIATE COURSE, TYPE I19.0C, AT AN AVERAGE RATE OF 456 LBS. PER SQ. YD.
D2	PROP. VARIABLE DEPTH ASPHALT CONC. INTERMEDIATE COURSE.
E1	PROP. APPROX. 5" ASPHALT CONC. BASE COURSE, TYPE B25.0C, AT AN AVERAGE RATE OF 570 LBS. PER SQ. YD.
R1	PROP. 2'-6" CONC. CURB & GUTTER
R2	PROP. 1'-6" CONC. CURB & GUTTER, CLASS AA CONCRETE
R3	PROP. 7" TRUCK MOUNTABLE CONC. ISLAND, CLASS AA CONCRETE
R4	PROP. 5" MONOLITHIC CONC. ISLAND (SURFACE MOUNTED)
R5	PROP. 1'-6" CURB & GUTTER W/ BLACK TINT, CLASS AA CONCRETE
R6	PROP. 7" TRUCK MOUNTABLE CONC. ISLAND W/ BLACK TINT, CLASS AA CONCRETE
T	EARTH MATERIAL

ROUNDABOUT AT THE INTERSECTION OF RIDGE ST.(SR-1542) AND CARTERS ACRES RD.(SR-1524)

		REVISIONS	
SCALE	N/A		
DATE	1-2020		
DWG. BY	JCB		
DESIGN BY	JCB		
APPROVED	JDH		

PROJECT NO.	SHEET NO.
44856.3.28	2A
F.A. PROJECT NO. HSIP-1542(012)	

ROADWAY DESIGN ENGINEER

NORTH CAROLINA PROFESSIONAL SEAL 034357 ENGINEER SEAL MICHAEL DEMPSEY HUNTER

DocuSigned by:

A92E75CC0FFB43B...

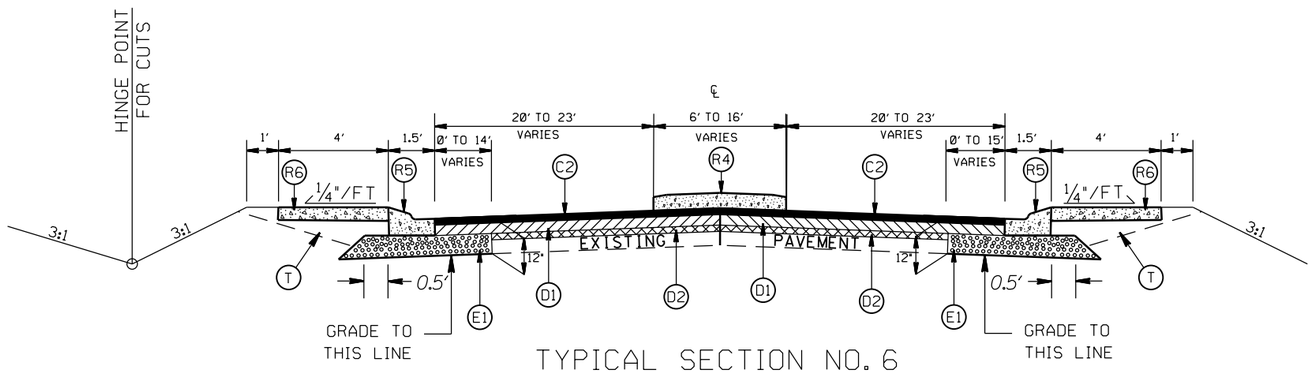

TYPICAL SECTION NO. 6

STA. 14+60.66 TO 14+66.85 -L-
STA. 16+07.31 TO 16+11.56 -Y-

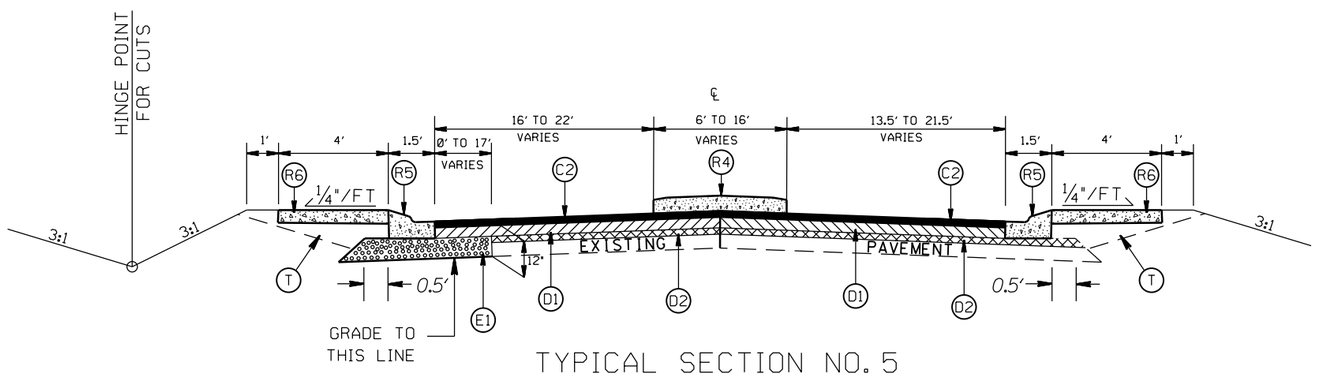

TYPICAL SECTION NO. 5

STA. 14+27.25 TO 14+60.66 -L-
STA. 14+31.82 TO 14+77.31 -Y-

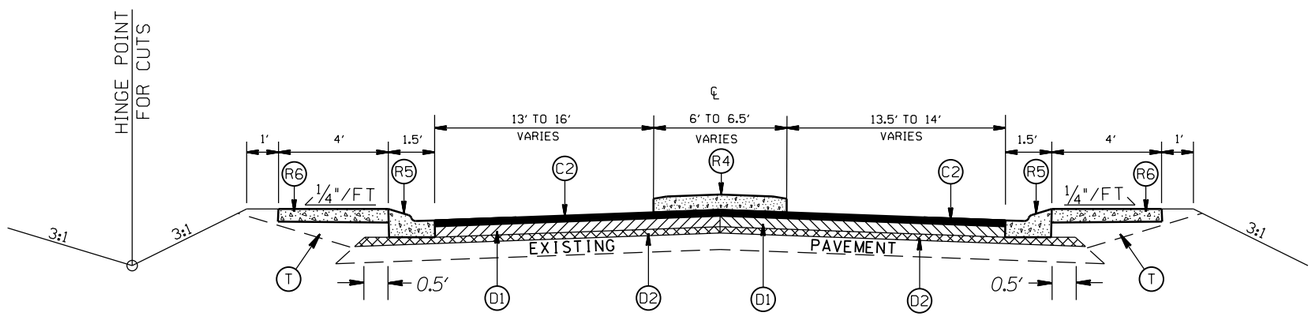

TYPICAL SECTION NO. 4

STA. 14+06.20 TO 14+27.25 -L-
STA. 16+65.94 TO 16+73.26 -Y-

PAVEMENT SCHEDULE

C1	PROP. APPROX. 1½" ASPHALT CONC. SURFACE COURSE, TYPE S9.5B, AT AN AVERAGE RATE OF 168 LBS. PER SQ. YD.
C2	PROP. APPROX. 3" ASPHALT CONC. SURFACE COURSE, TYPE S9.5B, AT AN AVERAGE RATE OF 168 LBS. PER SQ. YD. IN EACH OF TWO LAYERS.
D1	PROP. APPROX. 4" ASPHALT CONC. INTERMEDIATE COURSE, TYPE I19.0C, AT AN AVERAGE RATE OF 456 LBS. PER SQ. YD.
D2	PROP. VARIABLE DEPTH ASPHALT CONC. INTERMEDIATE COURSE.
E1	PROP. APPROX. 5" ASPHALT CONC. BASE COURSE, TYPE B25.0C, AT AN AVERAGE RATE OF 570 LBS. PER SQ. YD.
R1	PROP. 2'-6" CONC. CURB & GUTTER
R2	PROP. 1'-6" CONC. CURB & GUTTER, CLASS AA CONCRETE
R3	PROP. 7" TRUCK MOUNTABLE CONC. ISLAND, CLASS AA CONCRETE
R4	PROP. 5" MONOLITHIC CONC. ISLAND (SURFACE MOUNTED)
R5	PROP. 1'-6" CURB & GUTTER W/ BLACK TINT, CLASS AA CONCRETE
R6	PROP. 7" TRUCK MOUNTABLE CONC. ISLAND W/ BLACK TINT, CLASS AA CONCRETE
T	EARTH MATERIAL

ROUNDABOUT AT THE INTERSECTION OF RIDGE ST.(SR-1542) AND CARTERS ACRES RD.(SR-1524)

		REVISIONS	
SCALE	N/A		
DATE	1-2020		
DWG. BY	JCB		
DESIGN BY	JCB		
APPROVED	JDH		

PROJECT NO.	SHEET NO.
44856.3.28	2B
F.A. PROJECT NO. HSIP-1542(012)	

ROADWAY DESIGN ENGINEER

NORTH CAROLINA PROFESSIONAL SEAL 034357 ENGINEER SEAL

DocuSigned by:

A92E75CC0FFB43B...

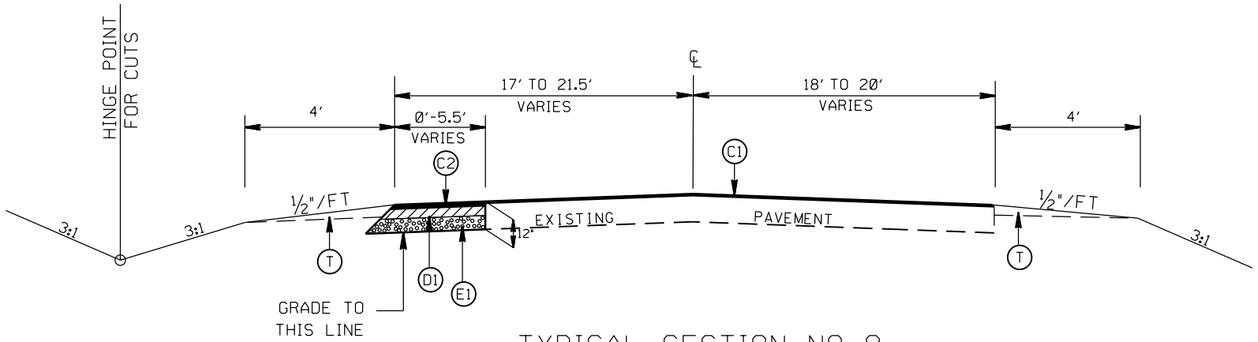

TYPICAL SECTION NO. 9

STA. 13+63.79 TO 13+88.79 -Y-

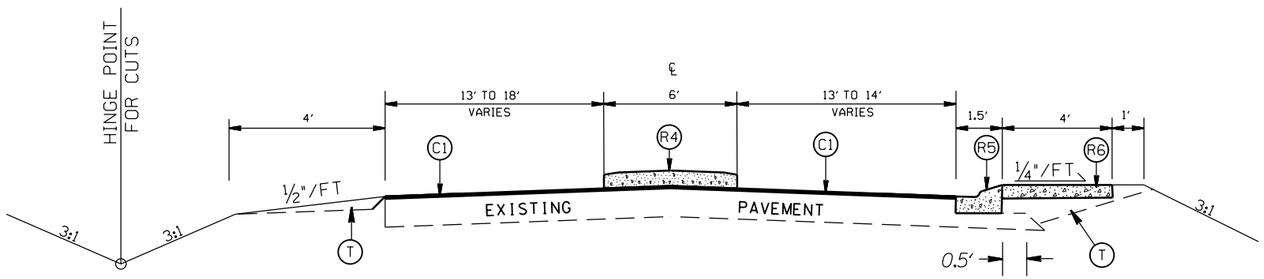

TYPICAL SECTION NO. 8

STA. 16+71.10 TO 16+85.40 -L-

STA. 16+81.57 TO 16+95.84 -Y-

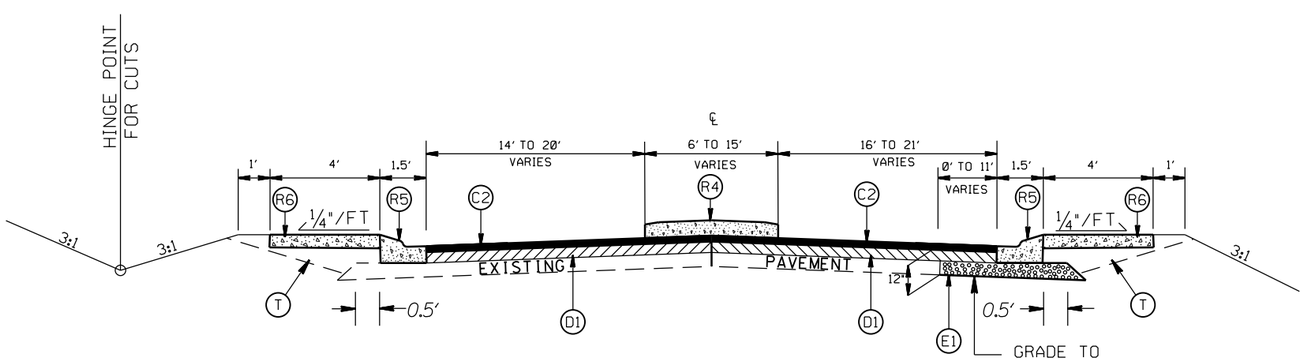

TYPICAL SECTION NO. 7

STA. 15+96.85 TO 16+35.84 -L-

PAVEMENT SCHEDULE

C1	PROP. APPROX. 1½" ASPHALT CONC. SURFACE COURSE, TYPE S9.5B, AT AN AVERAGE RATE OF 168 LBS. PER SQ. YD.
C2	PROP. APPROX. 3" ASPHALT CONC. SURFACE COURSE, TYPE S9.5B, AT AN AVERAGE RATE OF 168 LBS. PER SQ. YD. IN EACH OF TWO LAYERS.
D1	PROP. APPROX. 4" ASPHALT CONC. INTERMEDIATE COURSE, TYPE I19.0C, AT AN AVERAGE RATE OF 456 LBS. PER SQ. YD.
D2	PROP. VARIABLE DEPTH ASPHALT CONC. INTERMEDIATE COURSE.
E1	PROP. APPROX. 5" ASPHALT CONC. BASE COURSE, TYPE B25.0C, AT AN AVERAGE RATE OF 570 LBS. PER SQ. YD.
R1	PROP. 2'-6" CONC. CURB & GUTTER
R2	PROP. 1'-6" CONC. CURB & GUTTER, CLASS AA CONCRETE
R3	PROP. 7" TRUCK MOUNTABLE CONC. ISLAND, CLASS AA CONCRETE
R4	PROP. 5" MONOLITHIC CONC. ISLAND (SURFACE MOUNTED)
R5	PROP. 1'-6" CURB & GUTTER W/ BLACK TINT, CLASS AA CONCRETE
R6	PROP. 7" TRUCK MOUNTABLE CONC. ISLAND W/ BLACK TINT, CLASS AA CONCRETE
T	EARTH MATERIAL

ROUNDABOUT AT THE INTERSECTION OF RIDGE ST. (SR-1542) AND CARTERS ACRES RD. (SR-1524)

		REVISIONS	
SCALE	N/A		
DATE	1-2020		
DWG. BY	JCB		
DESIGN BY	JCB		
APPROVED	JDH		

PROJECT NO.	SHEET NO.
44856.3.28	2C
F.A. PROJECT NO. HSIP-1542(012)	

ROADWAY DESIGN ENGINEER

NORTH CAROLINA PROFESSIONAL SEAL 034357 ENGINEER SEAL MICHAEL J. PETERSON

Docusigned by:

A92E75CC0FFB43B...

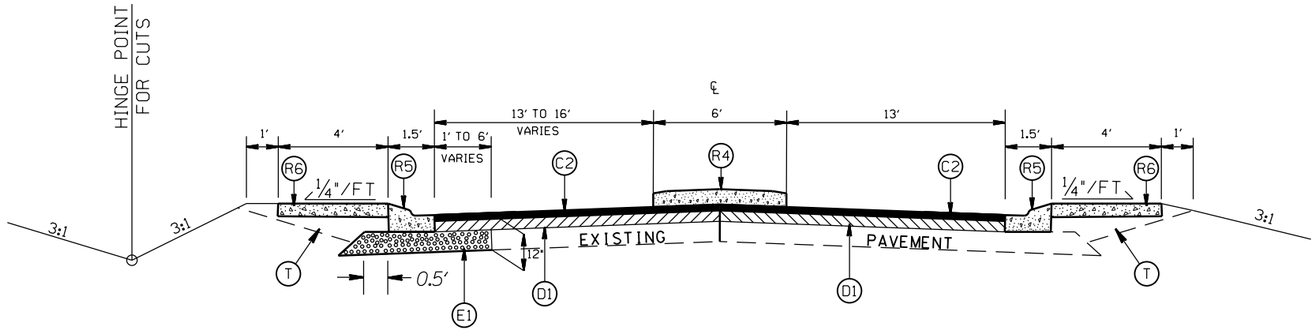

TYPICAL SECTION NO. 11

STA. 14+03.06 TO 14+31.82 -Y-

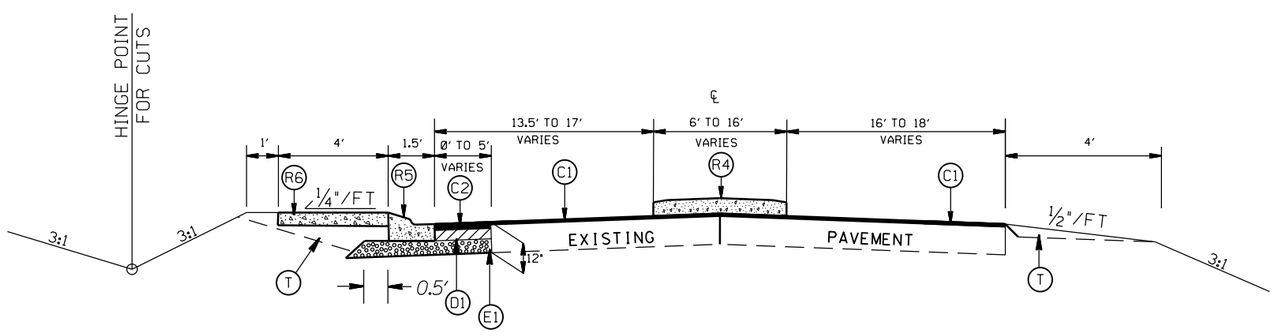

TYPICAL SECTION NO. 10

STA. 13+88.79 to 14+03.06 -Y-

PAVEMENT SCHEDULE

C1	PROP. APPROX. 1½" ASPHALT CONC. SURFACE COURSE, TYPE S9.5B, AT AN AVERAGE RATE OF 168 LBS. PER SQ. YD.
C2	PROP. APPROX. 3" ASPHALT CONC. SURFACE COURSE, TYPE S9.5B, AT AN AVERAGE RATE OF 168 LBS. PER SQ. YD. IN EACH OF TWO LAYERS.
D1	PROP. APPROX. 4" ASPHALT CONC. INTERMEDIATE COURSE, TYPE I19.0C, AT AN AVERAGE RATE OF 456 LBS. PER SQ. YD.
D2	PROP. VARIABLE DEPTH ASPHALT CONC. INTERMEDIATE COURSE.
E1	PROP. APPROX. 5" ASPHALT CONC. BASE COURSE, TYPE B25.0C, AT AN AVERAGE RATE OF 570 LBS. PER SQ. YD.
R1	PROP. 2'-6" CONC. CURB & GUTTER
R2	PROP. 1'-6" CONC. CURB & GUTTER, CLASS AA CONCRETE
R3	PROP. 7" TRUCK MOUNTABLE CONC. ISLAND, CLASS AA CONCRETE
R4	PROP. 5" MONOLITHIC CONC. ISLAND (SURFACE MOUNTED)
R5	PROP. 1'-6" CURB & GUTTER W/ BLACK TINT, CLASS AA CONCRETE
R6	PROP. 7" TRUCK MOUNTABLE CONC. ISLAND W/ BLACK TINT, CLASS AA CONCRETE
T	EARTH MATERIAL

ROUNDABOUT AT THE INTERSECTION OF RIDGE ST.(SR-1542) AND CARTERS ACRES RD.(SR-1524)

SCALE	N/A	
DATE	1-2020	
DWG. BY	JCB	
DESIGN BY	JCB	
APPROVED	JDH	

DIVISION OF HIGHWAYS

REVISIONS	

PROJECT NO.	SHEET NO.
44856.3.28	2D
F.A. PROJECT NO. HSIP-1542(012)	

ROADWAY DESIGN ENGINEER

NORTH CAROLINA PROFESSIONAL SEAL 034357 ENGINEER

DocuSigned by:

A92E75CC0FFB43B...

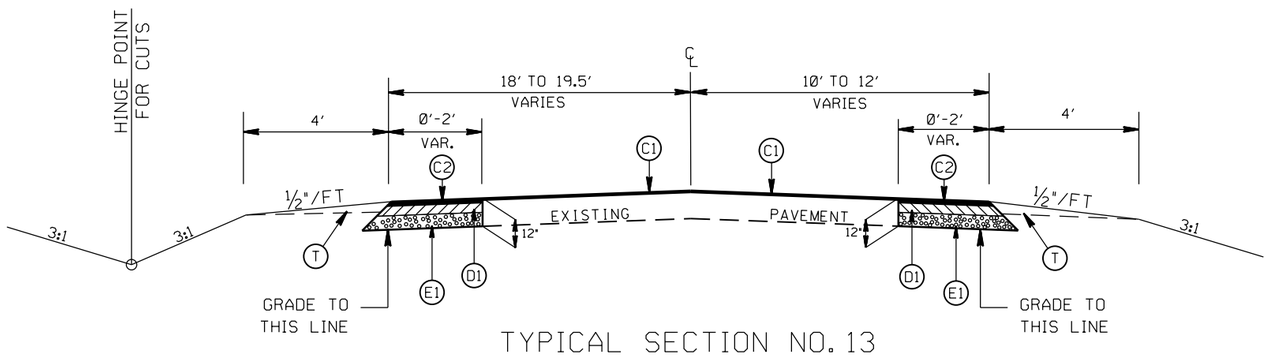

TYPICAL SECTION NO. 13

STA. 16+95.84 TO 17+06.57 -Y-

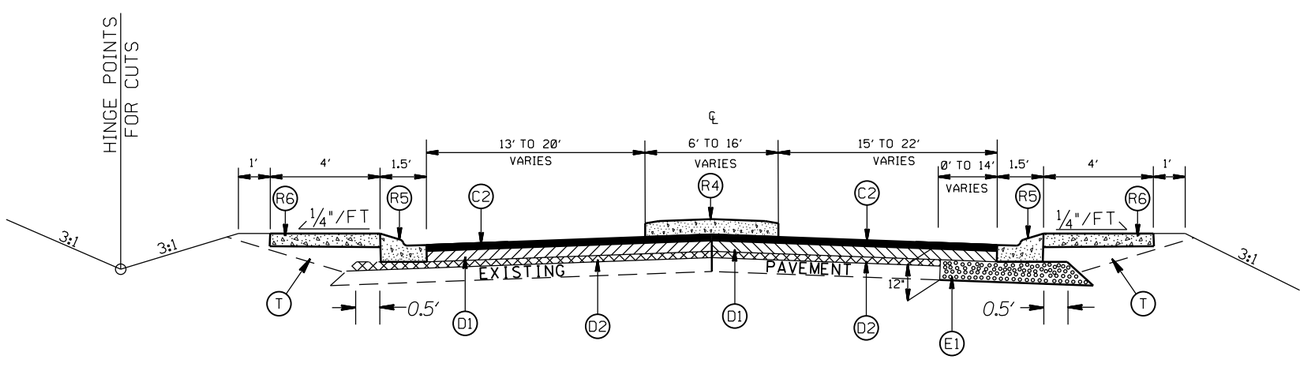

TYPICAL SECTION NO. 12

STA. 16+11.56 TO 16+65.94 -Y-

PAVEMENT SCHEDULE

C1	PROP. APPROX. 1½" ASPHALT CONC. SURFACE COURSE, TYPE S9.5B, AT AN AVERAGE RATE OF 168 LBS. PER SQ. YD.
C2	PROP. APPROX. 3" ASPHALT CONC. SURFACE COURSE, TYPE S9.5B, AT AN AVERAGE RATE OF 168 LBS. PER SQ. YD. IN EACH OF TWO LAYERS.
D1	PROP. APPROX. 4" ASPHALT CONC. INTERMEDIATE COURSE, TYPE I19.0C, AT AN AVERAGE RATE OF 456 LBS. PER SQ. YD.
D2	PROP. VARIABLE DEPTH ASPHALT CONC. INTERMEDIATE COURSE.
E1	PROP. APPROX. 5" ASPHALT CONC. BASE COURSE, TYPE B25.0C, AT AN AVERAGE RATE OF 570 LBS. PER SQ. YD.
R1	PROP. 2'-6" CONC. CURB & GUTTER
R2	PROP. 1'-6" CONC. CURB & GUTTER, CLASS AA CONCRETE
R3	PROP. 7" TRUCK MOUNTABLE CONC. ISLAND, CLASS AA CONCRETE
R4	PROP. 5" MONOLITHIC CONC. ISLAND (SURFACE MOUNTED)
R5	PROP. 1'-6" CURB & GUTTER W/ BLACK TINT, CLASS AA CONCRETE
R6	PROP. 7" TRUCK MOUNTABLE CONC. ISLAND W/ BLACK TINT, CLASS AA CONCRETE
T	EARTH MATERIAL

ROUNDABOUT AT THE INTERSECTION OF RIDGE ST.(SR-1542) AND CARTERS ACRES RD.(SR-1524)

		REVISIONS	
SCALE	N/A		
DATE	1-2020		
DWG. BY	JCB		
DESIGN BY	JCB		
APPROVED	JDH		

PROJECT NO.	SHEET NO.
44856.3.28	2E
F.A. PROJECT NO. HSIP-1542(012)	

ROADWAY DESIGN ENGINEER

NORTH CAROLINA PROFESSIONAL SEAL 034357 ENGINEER SEAL MICHAEL D. HEMPHILL

DocuSigned by:

A92E75CC0FFB43B...

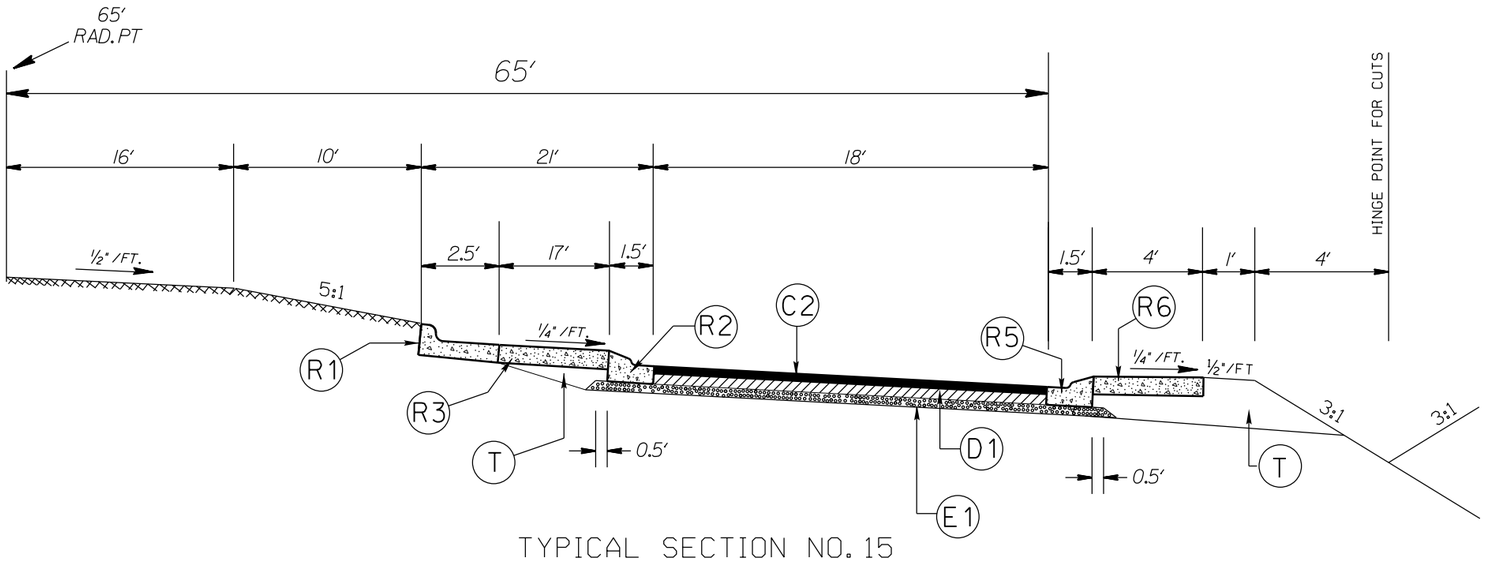

TYPICAL SECTION NO. 15

ROUNDABOUT

STA. 14+66.85 TO 15+96.85 -L-

STA. 14+77.31 TO 16+07.31 -Y-

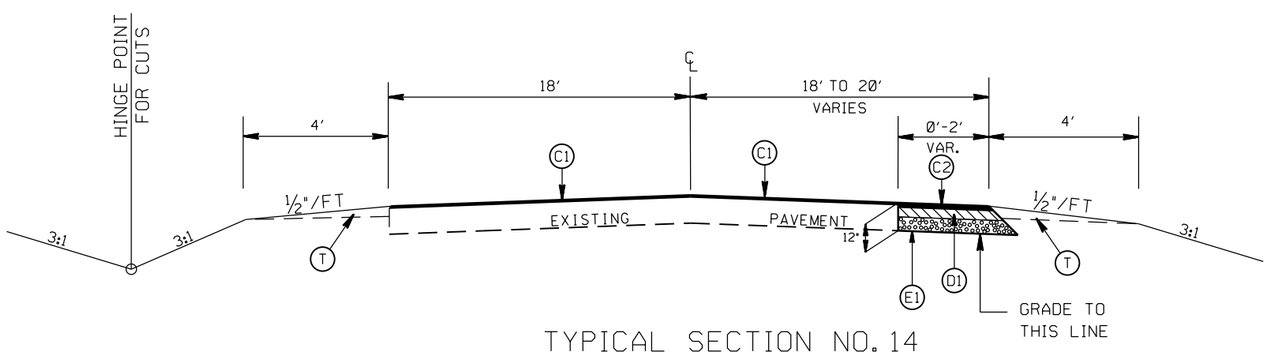

TYPICAL SECTION NO. 14

STA. 17+06.57 TO 17+20.84 -Y-

PAVEMENT SCHEDULE

C1	PROP. APPROX. 1½" ASPHALT CONC. SURFACE COURSE, TYPE S9.5B, AT AN AVERAGE RATE OF 168 LBS. PER SQ. YD.
C2	PROP. APPROX. 3" ASPHALT CONC. SURFACE COURSE, TYPE S9.5B, AT AN AVERAGE RATE OF 168 LBS. PER SQ. YD. IN EACH OF TWO LAYERS.
D1	PROP. APPROX. 4" ASPHALT CONC. INTERMEDIATE COURSE, TYPE I19.0C, AT AN AVERAGE RATE OF 456 LBS. PER SQ. YD.
D2	PROP. VARIABLE DEPTH ASPHALT CONC. INTERMEDIATE COURSE.
E1	PROP. APPROX. 5" ASPHALT CONC. BASE COURSE, TYPE B25.0C, AT AN AVERAGE RATE OF 570 LBS. PER SQ. YD.
R1	PROP. 2′-6" CONC. CURB & GUTTER
R2	PROP. 1′-6" CONC. CURB & GUTTER, CLASS AA CONCRETE
R3	PROP. 7" TRUCK MOUNTABLE CONC. ISLAND, CLASS AA CONCRETE
R4	PROP. 5" MONOLITHIC CONC. ISLAND (SURFACE MOUNTED)
R5	PROP. 1′-6" CURB & GUTTER W/ BLACK TINT, CLASS AA CONCRETE
R6	PROP. 7" TRUCK MOUNTABLE CONC. ISLAND W/ BLACK TINT, CLASS AA CONCRETE
T	EARTH MATERIAL

ROUNDABOUT AT THE INTERSECTION OF RIDGE ST.(SR-1542) AND CARTERS ACRES RD.(SR-1524)

		REVISIONS	
SCALE	N/A		
DATE	1-2020		
DWG. BY	JCB		
DESIGN BY	JCB		
APPROVED	JDH		

PROJECT NO.	SHEET NO.
44856.3.28	2F
F.A. PROJECT NO. HSIP-1542(012)	

ROADWAY DESIGN ENGINEER

NORTH CAROLINA PROFESSIONAL SEAL 034357 ENGINEER SEAL MICHAEL S. BRUMSON

DocuSigned by:

A92E75CC0FFB43E...

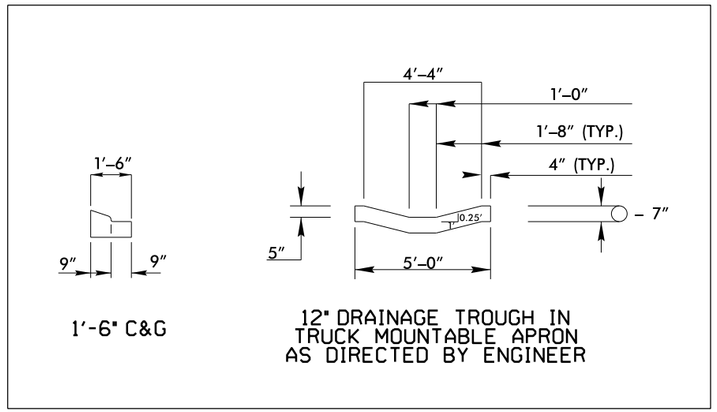

DRAINAGE TROUGH DETAIL

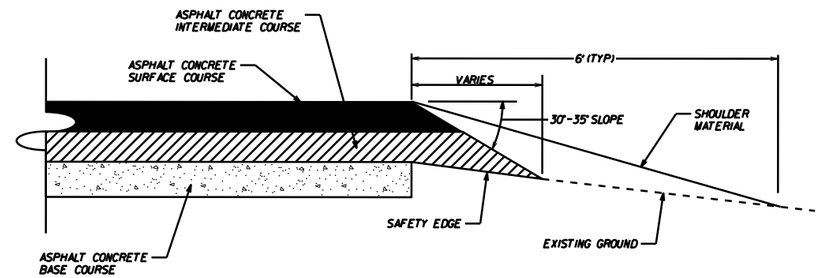

SAFETY EDGE DETAIL

PAVEMENT SCHEDULE

C1	PROP. APPROX. 1½" ASPHALT CONC. SURFACE COURSE, TYPE S9.5B AT AN AVERAGE RATE OF 168 LBS. PER SQ. YD.
C2	PROP. APPROX. 3" ASPHALT CONC. SURFACE COURSE, TYPE S9.5B, AT AN AVERAGE RATE OF 168 LBS. PER SQ. YD. IN EACH OF TWO LAYERS.
D1	PROP. APPROX. 4" ASPHALT CONC. INTERMEDIATE COURSE, TYPE I19.0C, AT AN AVERAGE RATE OF 456 LBS. PER SQ. YD.
D2	PROP. VARIABLE DEPTH ASPHALT CONC. INTERMEDIATE COURSE.
E1	PROP. APPROX. 5" ASPHALT CONC. BASE COURSE, TYPE B25.0C, AT AN AVERAGE RATE OF 570 LBS. PER SQ. YD.
R1	PROP. 2'-6" CONC. CURB & GUTTER
R2	PROP. 1'-6" CONC. CURB & GUTTER, CLASS AA CONCRETE
R3	PROP. 7" TRUCK MOUNTABLE CONC. ISLAND, CLASS AA CONCRETE
R4	PROP. 5" MONOLITHIC CONC. ISLAND (SURFACE MOUNTED)
R5	PROP. 1'-6" CURB & GUTTER W/ BLACK TINT, CLASS AA CONCRETE
R6	PROP. 7" TRUCK MOUNTABLE CONC. ISLAND W/ BLACK TINT, CLASS AA CONCRETE
T	EARTH MATERIAL

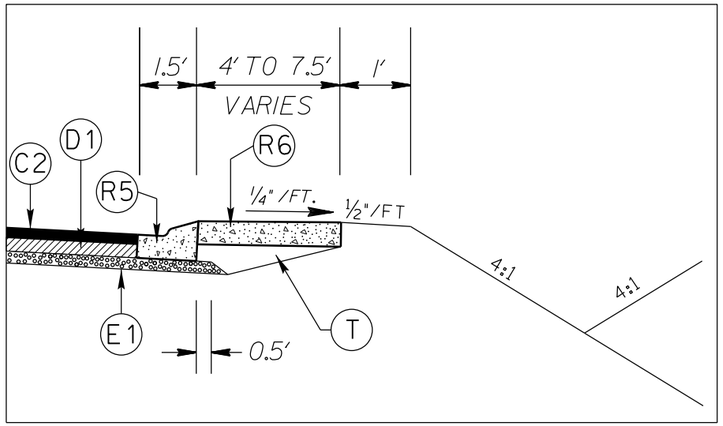

APRON DETAIL

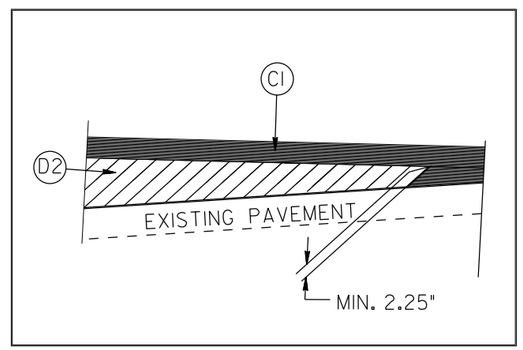

WEDGING DETAIL

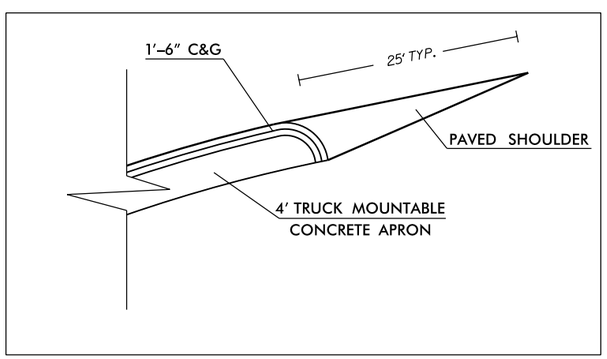

CURB DETAIL

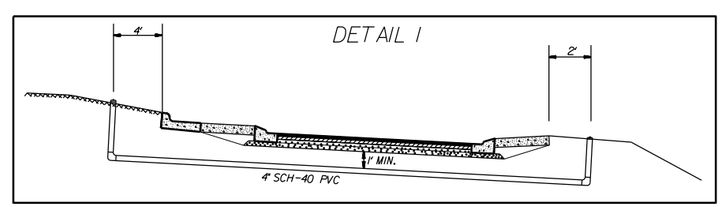

PVC PIPE DETAIL

ROUNDABOUT AT THE INTERSECTION OF
RIDGE ST.(SR-1542) AND
CARTERS ACRES RD.(SR-1524)

			REVISIONS	
SCALE	N/A			
DATE	1-2020			
DWG. BY	JCB			
DESIGN BY	JCB			
APPROVED	JDH			

PROJECT NO.	SHEET NO.
44856.3.28	2G
F.A. PROJECT NO. HSIP-1542(012)	

ROADWAY DESIGN ENGINEER

NORTH CAROLINA PROFESSIONAL SEAL 034357 ENGINEER SEAL

DocuSigned by:

A92E75CC0FFB43B...

STATE OF NORTH CAROLINA
DEPT. OF TRANSPORTATION
DIVISION OF HIGHWAYS
RALEIGH, N.C.

1-12

ENGLISH STANDARD DRAWING FOR

MOUNTING OF TYPE 'D', 'E' AND 'F' SIGNS ON 'U' CHANNEL POSTS

SHEET 2 OF 2

904.50

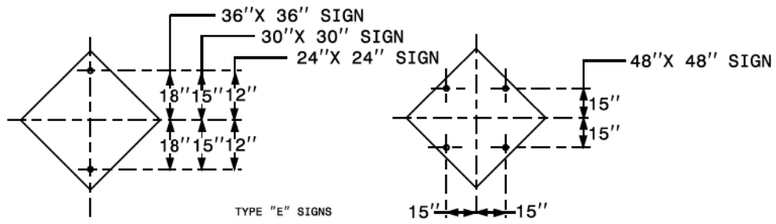

TYPE "E" SIGNS

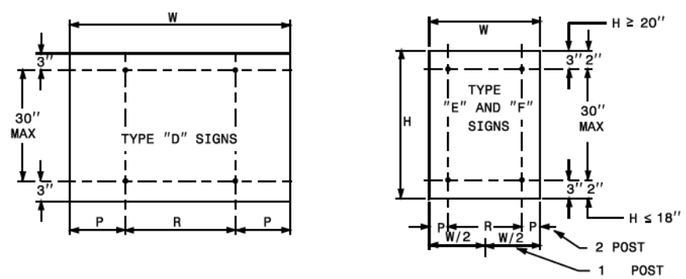

	NO. SUPPORTS		
	2	3 *	4
P	.207W	.145W	.107W
R	.586W	.355W	.262W

UNITS ON ATTACHED SHEET

*MINIMUM 4 FT. BETWEEN CHANNEL POSTS

HOLE PUNCHING DETAIL

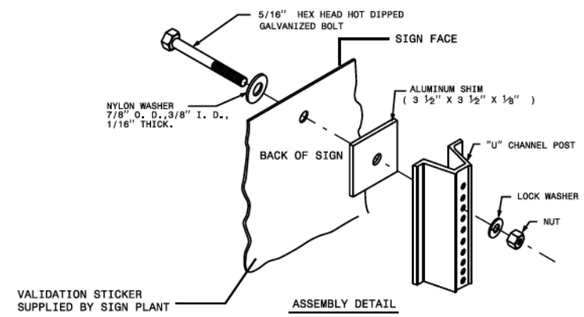

ASSEMBLY DETAIL

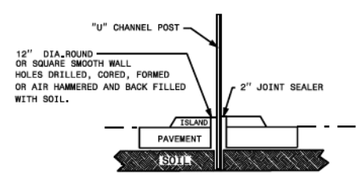

DETAIL FOR INSTALLATION OF CHANNEL POST IN CONCRETE

STATE OF NORTH CAROLINA
DEPT. OF TRANSPORTATION
DIVISION OF HIGHWAYS
RALEIGH, N.C.

1-12

ENGLISH STANDARD DRAWING FOR

MOUNTING OF TYPE 'D', 'E' AND 'F' SIGNS ON 'U' CHANNEL POSTS

SHEET 2 OF 2

904.50

12" DIA.HOLE LOCATION FOR SIGN U-CHANNEL POST IN SPLITTER ISLANDS

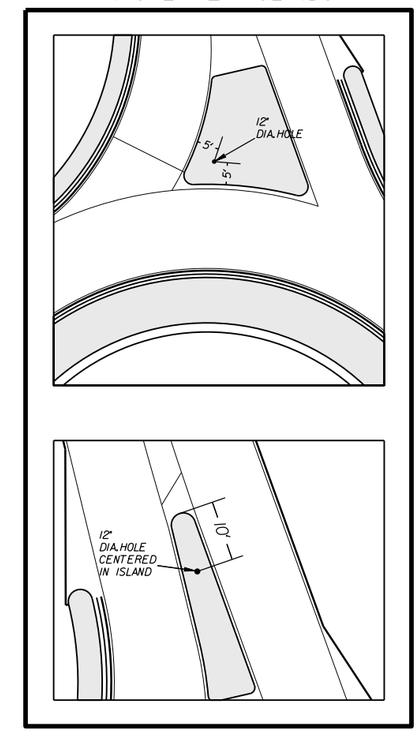

ROUNDABOUT AT THE INTERSECTION OF RIDGE ST.(SR-1542) AND CARTERS ACRES RD.(SR-1524)

		REVISIONS	
SCALE	N/A		
DATE	1-2020		
DWG. BY	JCB		
DESIGN BY	JCB		
APPROVED	JDH		

COMPUTED BY: JCB DATE: 12-10-19
CHECKED BY: DATE:

PROJECT REFERENCE NO.	SHEET NO.
44856.3.28	3

STATE OF NORTH CAROLINA
DIVISION OF HIGHWAYS
STATEWIDE
LIST OF PIPES, ENDWALLS, ETC. (FOR PIPES 48" & UNDER)

NOTE: Invert Elevations are for Bid Purposes only and shall not be used for project construction stakeout.
See "Standard Specifications For Roads and Structures, Section 300-5".

STATION	LOCATION (LT, RT, OR CL)	STRUCTURE NO. FROM	STRUCTURE NO. TO	TOP ELEVATION	INVERT ELEVATION	INVERT ELEVATION	SLOPE CRITICAL	SIDE DRAIN PIPE (RCP, CSP, CAAP, HDPE, or PVC) 12"	15"	18"	24"	30"	36"	42"	48"	DO NOT USE RCP	DO NOT USE CSP	DO NOT USE CAAP	DO NOT USE HDPE	C.S. PIPE 12" .064	15" .064	18" .064	24" .064	36" .079	42" .109	48" .109	R.C. PIPE (CLASS III) 15"	18"	24"	30"	36"	42"	48"
15+50 -Y-	LT.		401		589.21	589.05																						20'					
TOTALS:																												20'					

STATION	R.C. PIPE (CLASS IV) 12"	15"	18"	24"	30"	36"	42"	48"	*** R. C. PIPE (CLASS V)	*** R. C. PIPE CULVERTS, CONTRACTOR DESIGN PIPE	*** R. C. PIPE CULVERTS, CONTRACTOR DESIGN PIPE	15" SIDE DRAIN PIPE	18" SIDE DRAIN PIPE	ENDWALLS STD. 838.01, STD. 838.11 OR STD. 838.80 (UNLESS NOTED OTHERWISE) CU. YDS. R.C.P.	C.S.P.	QUANTITIES FOR DRAINAGE STRUCTURES * TOTAL L.F. FOR PAY QUANTITY SHALL BE COL. 'A' + (1.3 X COL. 'B') PER EACH (0' THRU 5.0')	LIN. *FT. A 5.0' THRU 10.0'	B 10.0' AND ABOVE	C.B. STD. 840.01 OR STD. 840.02	FRAME, GRATES AND HOOD STANDARD 840.03 TYPE OF GRATE E	F	G	CONCRETE TRANSITIONAL SECTION CATCH BASIN	DROP INLET	CORR. STEEL ELBOWS NO. & SIZE	CONC. COLLARS CL. "B" C.Y. STD 840.72	CONC. & BRICK PIPE PLUG, C.Y. STD. 840.71	PIPE REMOVAL LIN. FT.	REMARKS
15+50 -Y-																														EXTEND EXISTING DRIVEWAY PIPE
TOTALS:																														

SIZE / THICKNESS OR GAUGE

ABBREVIATIONS

- C.B. CATCH BASIN
- N.D.I. NARROW DROP INLET
- D.I. DROP INLET
- G.D.I. GRATED DROP INLET
- G.D.I. (N.S.) GRATED DROP INLET (NARROW SLOT)
- J.B. JUNCTION BOX
- M.H. MANHOLE
- T.B.D.I. TRAFFIC BEARING DROP INLET
- T.B.J.B. TRAFFIC BEARING JUNCTION BOX

4/04/06

24-MAR-2021 08:12
St. Caters Acres RAB\sum\W-5710AB_Ridge St_Caters Acres_st9_sum.dgn

PROJECT NO.	SHEET NO.
44856.3.28	4
F.A. PROJECT NO. HSIP-1542(012)	

ROADWAY DESIGN ENGINEER

NORTH CAROLINA PROFESSIONAL SEAL 034357 ENGINEER SEAN MICHAEL EPPERSON

DocuSigned by:

A92E75CC0FFB43B...

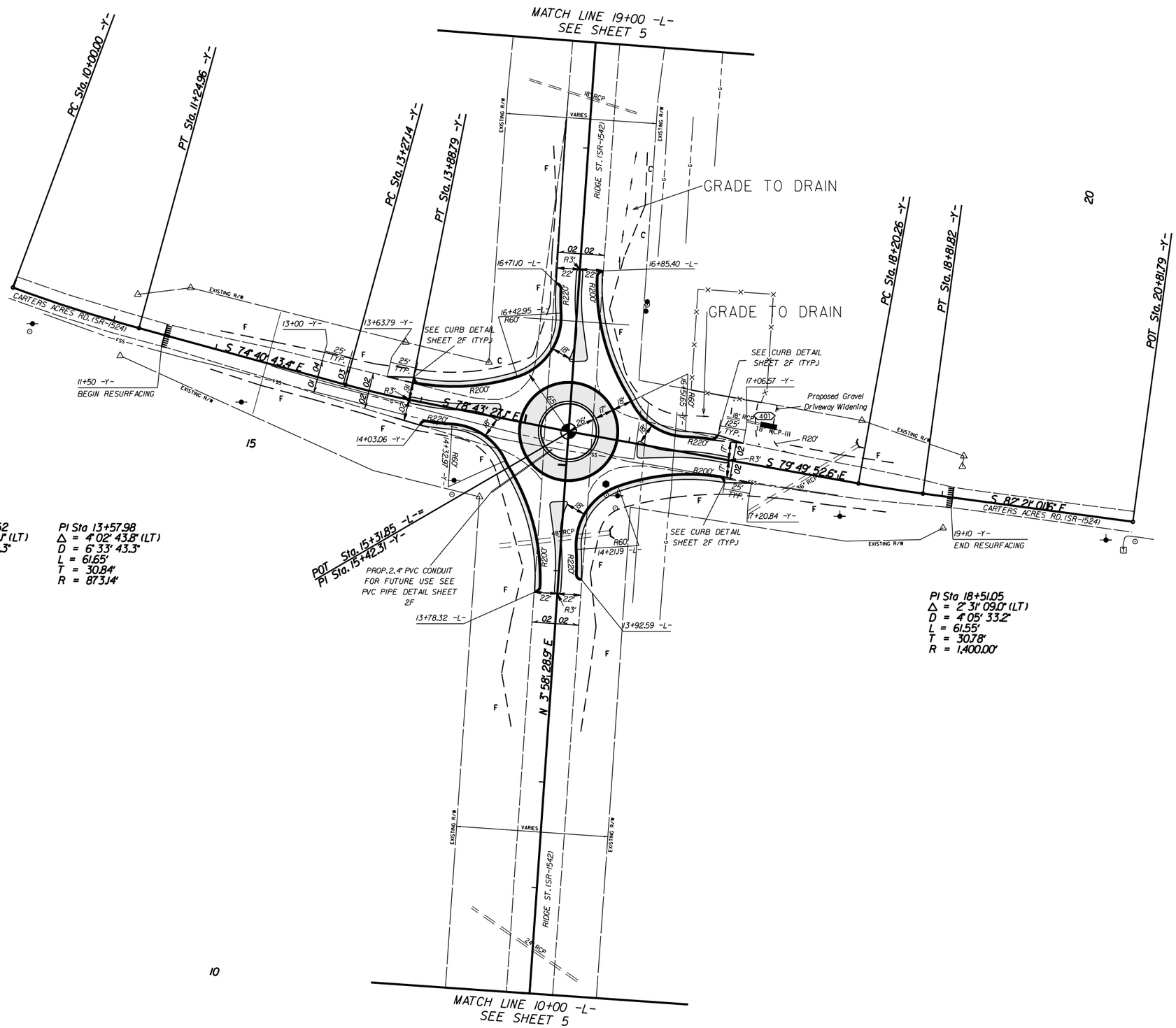

PI Sta 10+62.52
Δ = 5° 04' 42.1" (LT)
D = 4° 03' 50.3"
L = 124.96'
T = 62.52'
R = 1,409.85'

PI Sta 13+57.98
Δ = 4° 02' 43.8" (LT)
D = 6° 33' 43.3"
L = 61.65'
T = 30.84'
R = 873.14'

PI Sta 18+51.05
Δ = 2° 31' 09.0" (LT)
D = 4° 05' 33.2"
L = 61.55'
T = 30.78'
R = 1,400.00'

NOTE: INCIDENTAL MILL APPROXIMATELY 25' AT EACH TIE IN TO PROVIDE A SMOOTH TRANSITION TO THE EXISTING ASPHALT PAVEMENT.

ROUNDABOUT AT THE INTERSECTION OF RIDGE ST.(SR-1542) AND CARTERS ACRES RD.(SR-1524)

			REVISIONS	
SCALE	1"=50'	DIVISION OF HIGHWAYS STATE OF NORTH CAROLINA DEPARTMENT OF TRANSPORTATION		
DATE	11-2019			
DWG. BY	JCB			
DESIGN BY	JCB			
APPROVED	JDH			

PROJECT NO.	SHEET NO.
44856.3.28	4A
F.A. PROJECT NO. HSIP-1542(012)	

ROADWAY DESIGN ENGINEER

NORTH CAROLINA PROFESSIONAL SEAL 034357 ENGINEER SEAN MICHAEL EPPERSON

DocuSigned by:

A92E75CC0FFB43E...

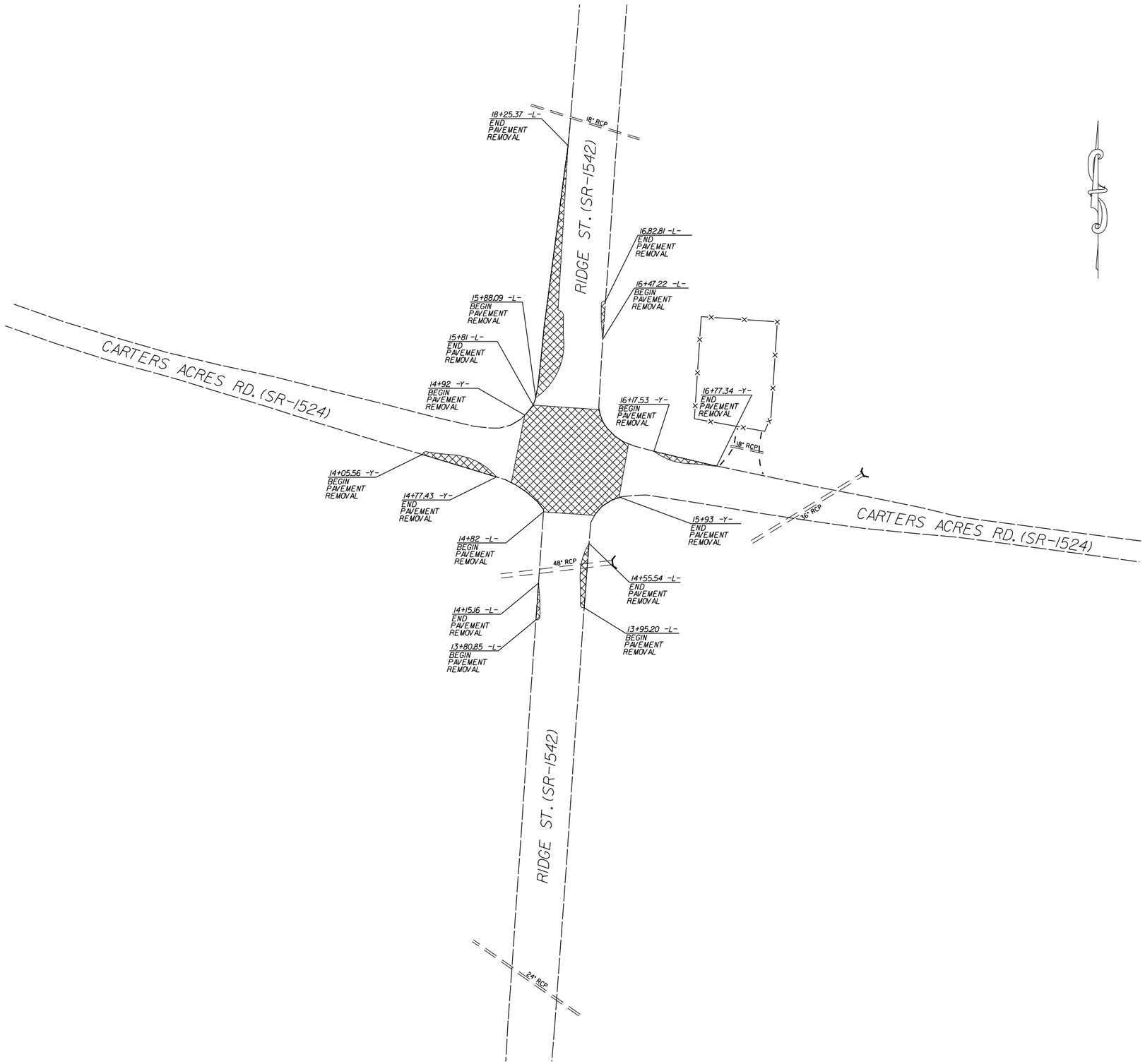

FULL DEPTH PAVEMENT REMOVAL

ROUNDABOUT AT THE INTERSECTION OF
RIDGE ST.(SR-1542) AND
CARTER ACRES RD.(SR-1524)

			REVISIONS	
SCALE	1"=50'	DIVISION OF HIGHWAYS STATE OF NORTH CAROLINA		
DATE	11-2019			
DWG. BY	JCB			
DESIGN BY	JCB			
APPROVED	JDH			

PROJECT NO.	SHEET NO.
44856.3.28	5
F.A. PROJECT NO. HSIP-1542(012)	

ROADWAY DESIGN ENGINEER

NORTH CAROLINA PROFESSIONAL SEAL 034357 ENGINEER SEAL MICHAEL E. JOHNSON

DocuSigned by:

A92E75CC0FFB43B...

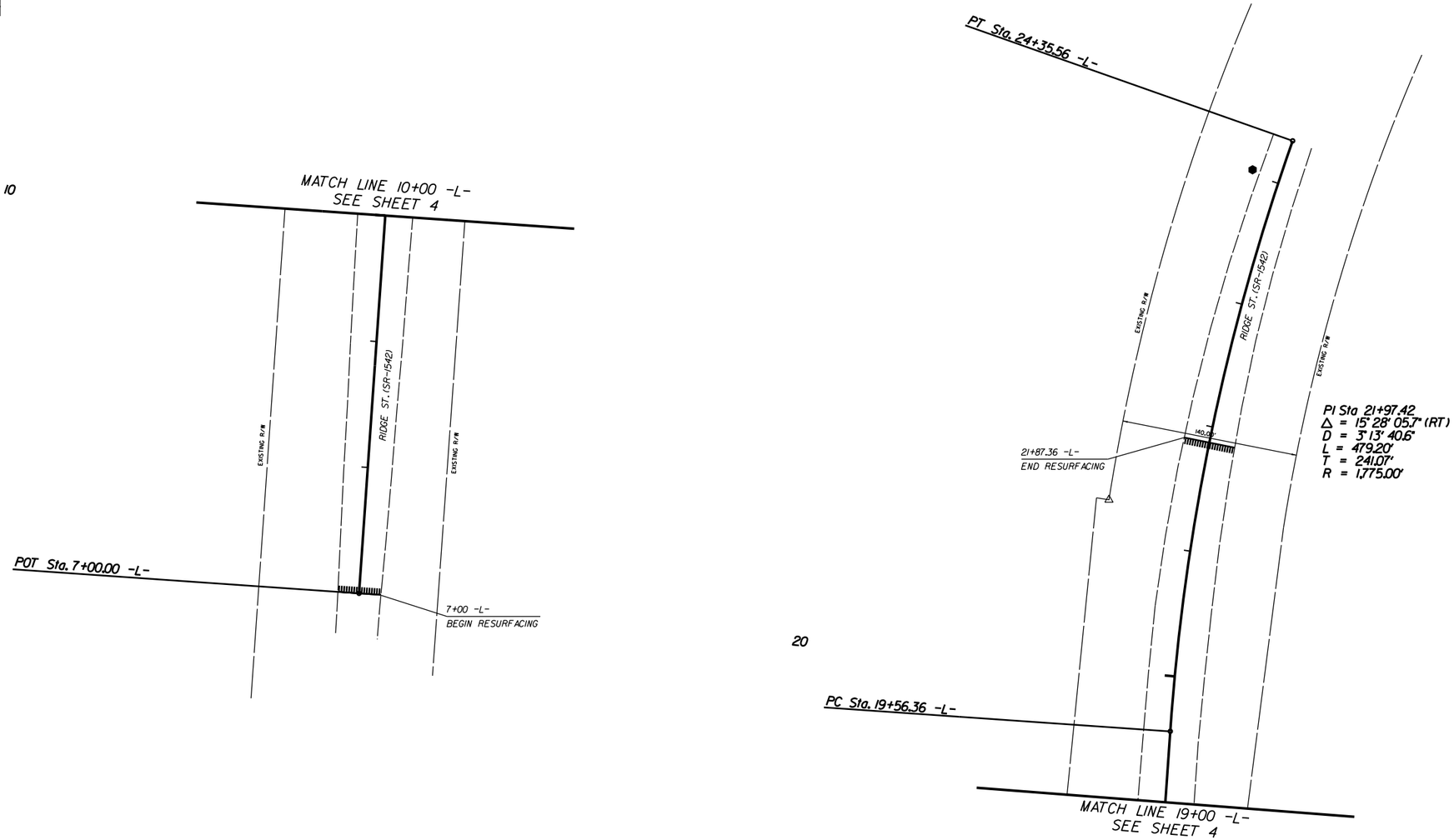

NOTE: INCIDENTAL MILL APPROX. 25' AT EACH TIE IN TO PROVIDE A SMOOTH TRANSITION TO THE EXISTING ASPHALT PAVEMENT.

ROUNDABOUT AT THE INTERSECTION OF RIDGE ST. (SR-1542) AND CARTERS ACRES RD. (SR-1524)

			REVISIONS	
SCALE	1"=50'	DIVISION OF HIGHWAYS STATE OF NORTH CAROLINA DEPARTMENT OF TRANSPORTATION		
DATE	11-2019			
DWG. BY	JCB			
DESIGN BY	JCB			
APPROVED	JDH			

PROJECT REFERENCE NO.	SHEET NO.
44856.3.28	6

ROADWAY DESIGN ENGINEER

NORTH CAROLINA PROFESSIONAL SEAL 034357 ENGINEER SEAN MICHAEL ROSCOE

DocuSigned by:

HYDRAULICS ENGINEER

DOCUMENT NOT CONSIDERED FINAL UNLESS ALL SIGNATURES COMPLETED

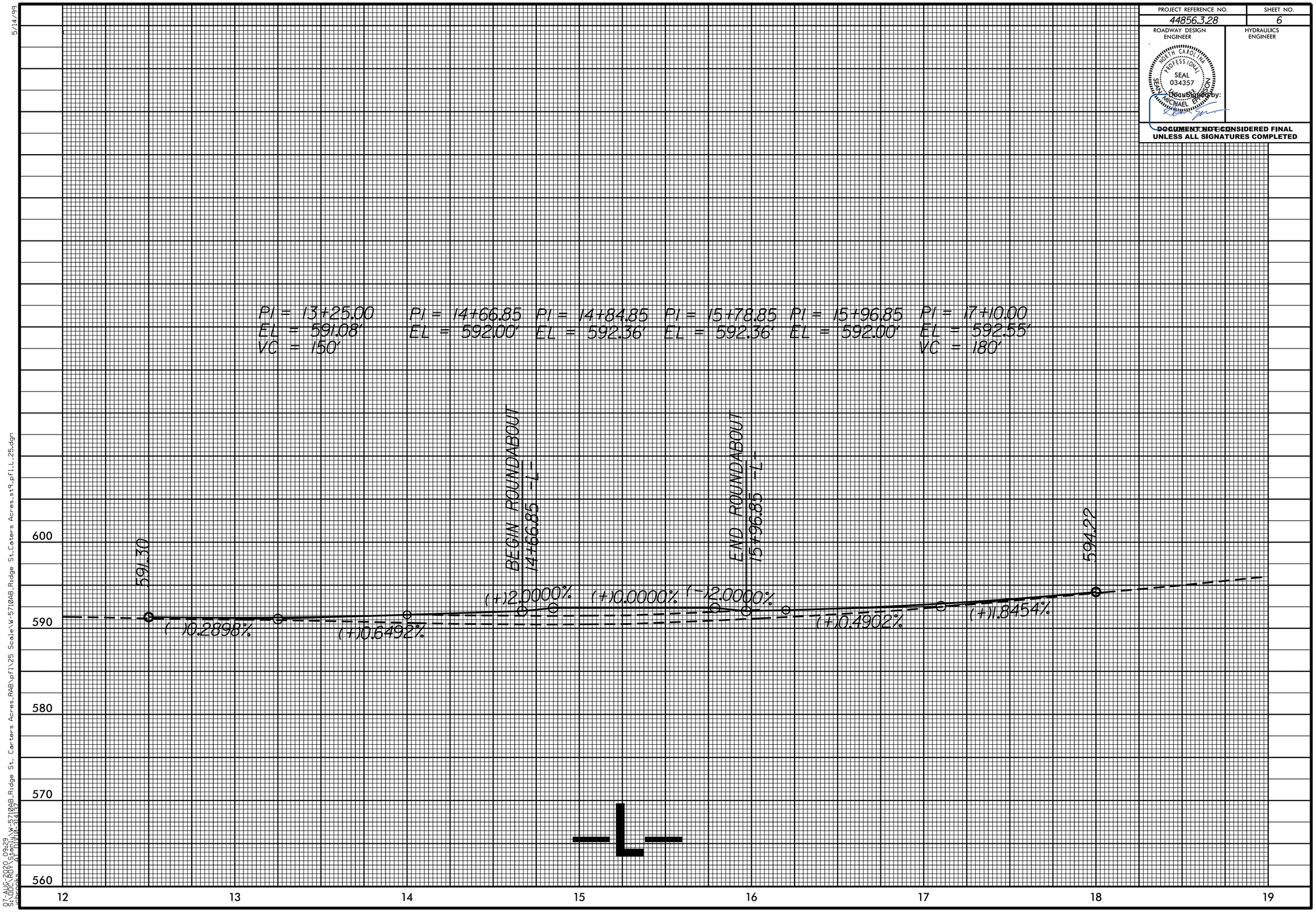

07-AUG-2020 09:29
S:\DDC\ROY\Stanly\W-5710AB_Ridge St. Carters Acres_RAB\pfl\25 Scale\W-5710AB_Ridge St.Carters Acres_s19_pfl_L_25.dgn
jcbrooks AT DIVD-34147

PROJECT REFERENCE NO.	SHEET NO.
44856.3.28	7

ROADWAY DESIGN ENGINEER

NORTH CAROLINA PROFESSIONAL SEAL 034357 ENGINEER SEAN MICHAEL

DocuSigned by:

HYDRAULICS ENGINEER

DOCUMENT NOT CONSIDERED FINAL UNLESS ALL SIGNATURES COMPLETED

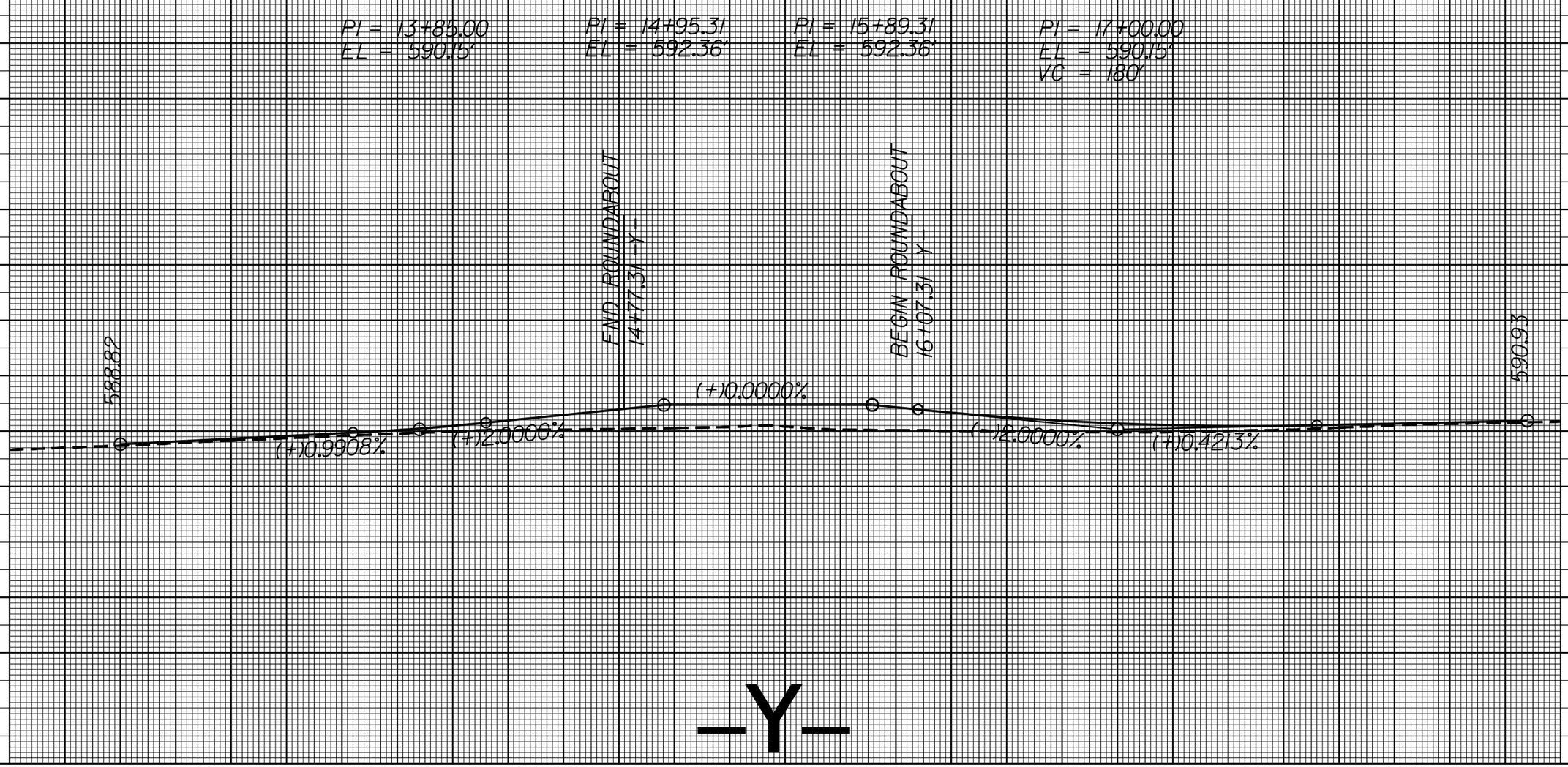

03-SEP-2020 07:53
S:\DOC\ROY\Stanly\W-5710AB_Ridge St. Carters Acres_RAB\pfl\25 Scale\W-5710AB_Ridge St.Carters Acres_s19_pfl_Y_25.dgn
checks AT DWG-34137

5/14/99

TIP PROJECT: W-5710AB

STATE	STATE PROJECT REFERENCE NO.	SHEET NO.	TOTAL SHEETS
N.C.	44856.3.28	EC-1	

STATE PROJ. NO.	F.A. PROJ. NO.	DESCRIPTION
44856.1.28	HSIP-1542(012)	P.E.
44856.2.28	HSIP-1542(012)	R/W
44856.3.28	HSIP-1542(012)	CONST.

STATE OF NORTH CAROLINA
DIVISION OF HIGHWAYS

PLAN FOR PROPOSED
HIGHWAY EROSION CONTROL

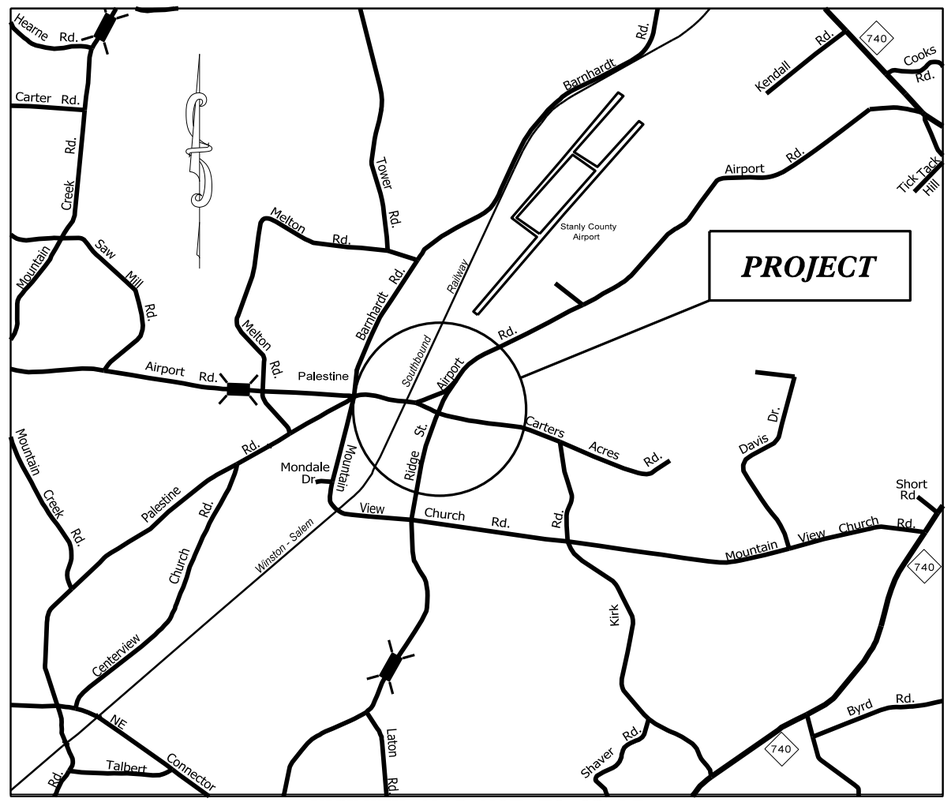

VICINITY MAP NOT TO SCALE

EROSION AND SEDIMENT CONTROL MEASURES

Std. #	Description	Symbol
1630.03	Temporary Silt Ditch	TSD
1630.05	Temporary Diversion	TD
1605.01	Temporary Silt Fence	
1606.01	Special Sediment Control Fence	
1622.01	Temporary Berms and Slope Drains	
1630.02	Silt Basin Type B	
1633.01	Temporary Rock Silt Check Type-A	
	Temporary Rock Silt Check Type-A with Matting and Polyacrylamide (PAM)	
1633.02	Temporary Rock Silt Check Type-B	
	Wattle / Coir Fiber Wattle	SW CFW
	Wattle / Coir Fiber Wattle with Polyacrylamide (PAM)	
1634.01	Temporary Rock Sediment Dam Type-A	
1634.02	Temporary Rock Sediment Dam Type-B	
1635.01	Rock Pipe Inlet Sediment Trap Type-A	
1635.02	Rock Pipe Inlet Sediment Trap Type-B	
1630.04	Stilling Basin	
1630.06	Special Stilling Basin	
	Rock Inlet Sediment Trap:	
1632.01	Type A	A
1632.02	Type B	B
1632.03	Type C	C
	Skimmer Basin	
	Tiered Skimmer Basin	
	Infiltration Basin	

THIS PROJECT CONTAINS EROSION CONTROL PLANS FOR CLEARING AND GRUBBING PHASE OF CONSTRUCTION.

INSTALL PERIMETER EROSION CONTROL MEASURES DURING INITIAL CLEARING PHASE

GRAPHIC SCALE

0
PLANS

0
PROFILE (HORIZONTAL)

0
PROFILE (VERTICAL)

ROADSIDE ENVIRONMENTAL UNIT
DIVISION OF HIGHWAYS
STATE OF NORTH CAROLINA

THESE EROSION AND SEDIMENT CONTROL PLANS COMPLY WITH THE REGULATIONS SET FORTH BY THE NCG-010000 GENERAL CONSTRUCTION PERMIT EFFECTIVE APRIL 1, 2019 ISSUED BY THE NORTH CAROLINA DEPARTMENT OF ENVIRONMENT AND NATURAL RESOURCES DIVISION OF WATER QUALITY.

Prepared In the Office of:

DDC UNIT DIVISION 10
DEPARTMENT OF TRANSPORTATION
DIVISION OF HIGHWAYS

2018 STANDARD SPECIFICATIONS

Designed by:

CHAD BURRIS — *NAME*
4159 — *LEVEL III CERTIFICATION NO.*

Roadway Standard Drawings

The following roadway english standards as appear in "Roadway Standard Drawings"– Roadway Design Unit – N. C. Department of Transportation – Raleigh, N. C., dated January 2018 and the latest revison thereto are applicable to this project and by reference hereby are considered a part of these plans.

1604.01	Railroad Erosion Control Detail	1632.01	Rock Inlet Sediment Trap Type A
1605.01	Temporary Silt Fence	1632.02	Rock Inlet Sediment Trap Type B
1606.01	Special Sediment Control Fence	1632.03	Rock Inlet Sediment Trap Type C
1607.01	Gravel Construction Entrance	1633.01	Temporary Rock Silt Check Type A
1622.01	Temporary Berms and Slope Drains	1633.02	Temporary Rock Silt Check Type B
1630.01	Riser Basin	1634.01	Temporary Rock Sediment Dam Type A
1630.02	Silt Basin Type B	1634.02	Temporary Rock Sediment Dam Type B
1630.03	Temporary Silt Ditch	1635.01	Rock Pipe Inlet Sediment Trap Type A
1630.04	Stilling Basin	1635.02	Rock Pipe Inlet Sediment Trap Type B
1630.05	Temporary Diversion	1640.01	Coir Fiber Baffle
1630.06	Special Stilling Basin	1645.01	Temporary Stream Crossing
1631.01	Matting Installation		

e St. Carters Acres.st9.erosion_TSH.dgn
01-AUG-2020 16:36
Job-code: AT 01/18-31137

PROJECT NO.	SHEET NO.
44856.3.28	EC-2
F.A. PROJECT NO.	HSIP-1542(012)

WATTLE WITH POLYACRYLAMIDE (PAM) DETAIL

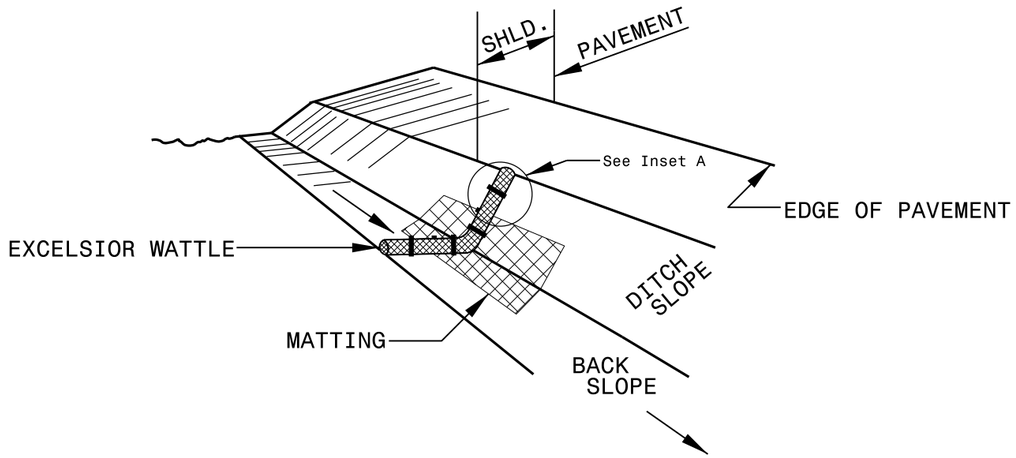

ISOMETRIC VIEW

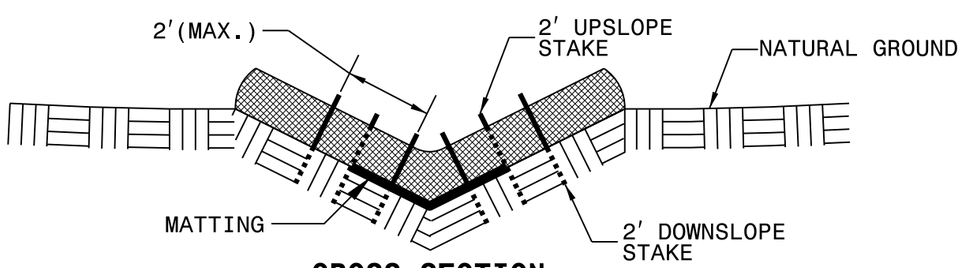

CROSS SECTION VEE DITCH

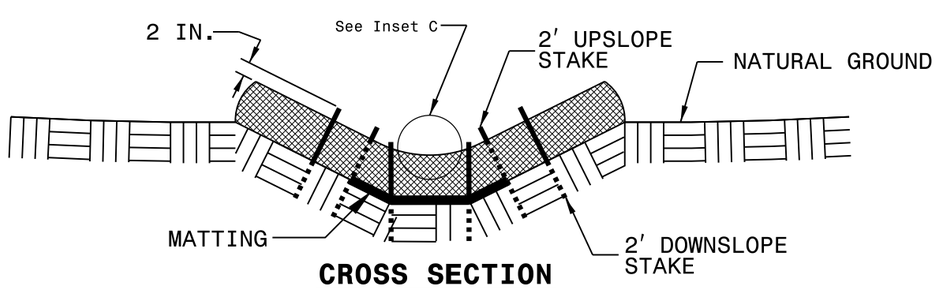

CROSS SECTION TRAPEZOIDAL DITCH

NOTES:

USE MINIMUM 12 IN. DIAMETER EXCELSIOR WATTLE.

USE 2 FT. WOODEN STAKES WITH A 2 IN. BY 2 IN. NOMINAL CROSS SECTION.

ONLY INSTALL WATTLE(S) TO A HEIGHT IN DITCH SO FLOW WILL NOT WASH AROUND WATTLE AND SCOUR DITCH SLOPES AND AS DIRECTED.

INSTALL A MINIMUM OF 2 UPSLOPE STAKES AND 4 DOWNSLOPE STAKES AT AN ANGLE TO WEDGE WATTLE TO BOTTOM OF DITCH.

PROVIDE STAPLES MADE OF 0.125 IN. DIAMETER STEEL WIRE FORMED INTO A U SHAPE NOT LESS THAN 12″ IN LENGTH.

INSTALL STAPLES APPROXIMATELY EVERY 1 LINEAR FOOT ON BOTH SIDES OF WATTLE AND AT EACH END TO SECURE IT TO THE SOIL.

INSTALL MATTING IN ACCORDANCE WITH SECTION 1631 OF THE STANDARD SPECIFICATIONS.

PRIOR TO POLYACRYLAMIDE (PAM) APPLICATION, OBTAIN A SOIL SAMPLE FROM PROJECT LOCATION, AND FROM OFFSITE MATERIAL, AND ANALYZE FOR APPROPRIATE PAM FLOCCULANT TO BE APPLIED TO EACH WATTLE.

INITIALLY APPLY 2 OUNCES OF ANIONIC OR NEUTRALLY CHARGED PAM OVER WATTLE WHERE WATER WILL FLOW AND 1 OUNCE OF PAM ON MATTING ON EACH SIDE OF WATTLE. REAPPLY PAM AFTER EVERY RAINFALL EVENT THAT IS EQUAL TO OR EXCEEDS 0.50 IN.

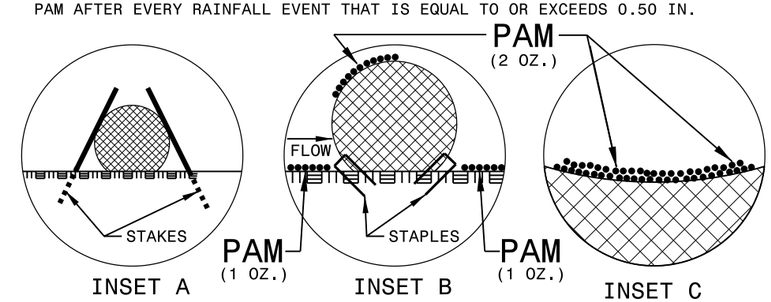

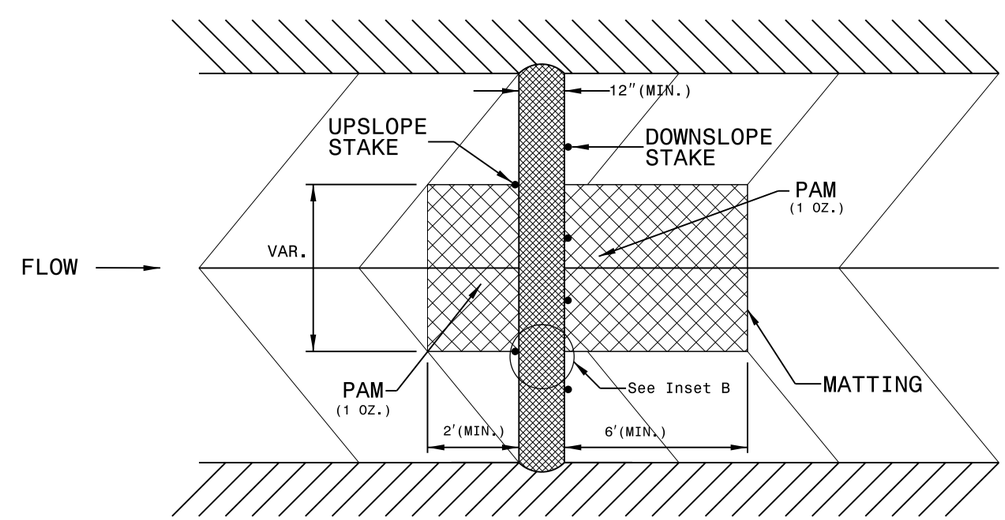

TOP VIEW

PROJECT REFERENCE NO.	SHEET NO.
44856.3.28	EC-2A
R/W SHEET NO.	
ROADWAY DESIGN ENGINEER	HYDRAULICS ENGINEER

MATTING INSTALLATION DETAIL

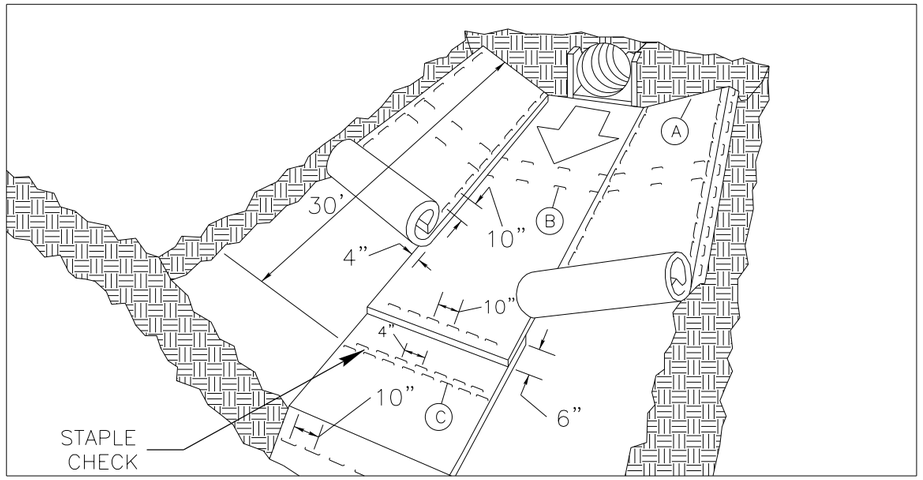

MATTING IN DITCHES

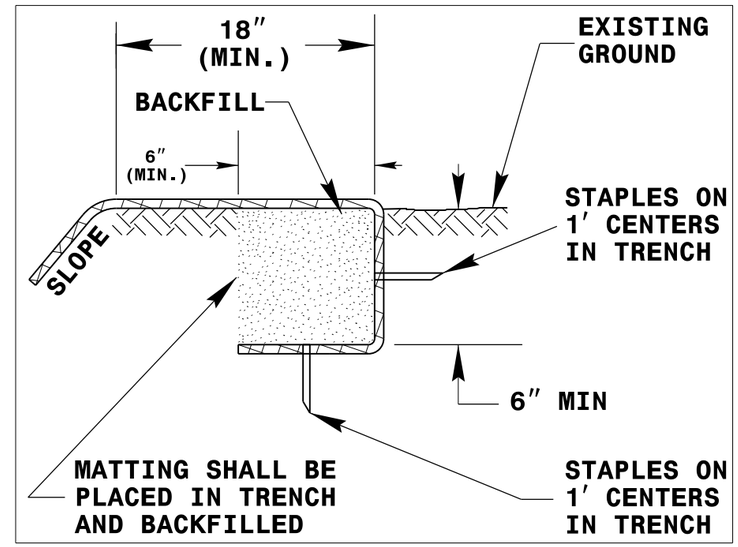

DIAGRAM A

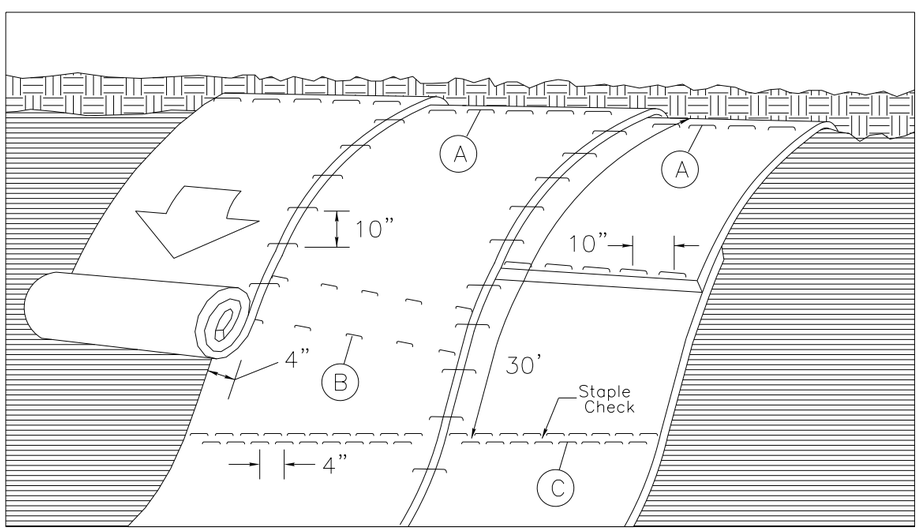

MATTING ON SLOPES

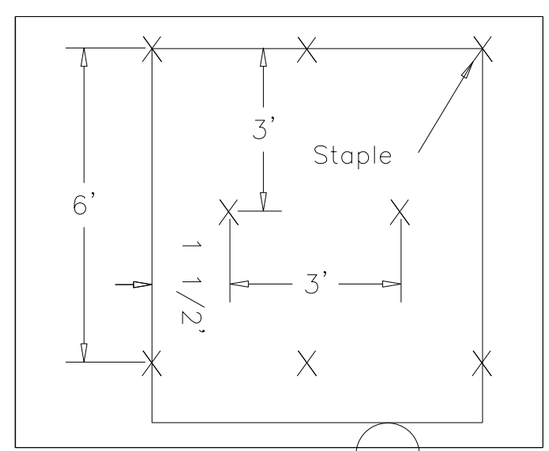

DIAGRAM B

Staple Check Pattern

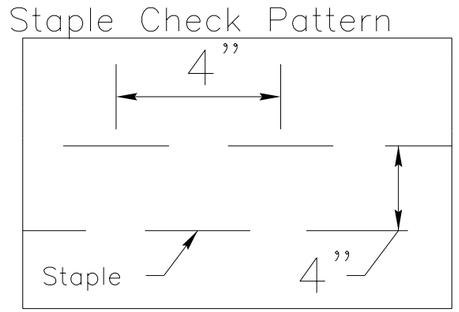

DIAGRAM C

NOTES:

THIS DETAIL APPLIES TO STRAW, EXCELSIOR, AND PERMANENT SOIL REINFORCEMENT MAT (PSRM) INSTALLATION.

STAPLES SHALL BE NO. 11 GAUGE STEEL WIRE FORMED INTO A "U" SHAPE WITH A MINIMUM THROAT WIDTH OF 1 INCH AND NOT LESS THAN 6 INCHES IN LENGTH.

NOT TO SCALE

PROJECT REFERENCE NO.	SHEET NO.
44856.3.28	EC-3
ROADWAY DESIGN ENGINEER	HYDRAULICS ENGINEER

DIVISION OF HIGHWAYS
STATE OF NORTH CAROLINA

SOIL STABILIZATION TIMEFRAMES

SITE DESCRIPTION	STABILIZATION TIME	TIMEFRAME EXCEPTIONS
PERIMETER DIKES, SWALES, DITCHES AND SLOPES	7 DAYS	NONE
HIGH QUALITY WATER (HQW) ZONES	7 DAYS	NONE
SLOPES STEEPER THAN 3:1	7 DAYS	IF SLOPES ARE 10' OR LESS IN LENGTH AND ARE NOT STEEPER THAN 2:1, 14 DAYS ARE ALLOWED.
SLOPES 3:1 OR FLATTER	14 DAYS	7 DAYS FOR SLOPES GREATER THAN 50' IN LENGTH.
ALL OTHER AREAS WITH SLOPES FLATTER THAN 4:1	14 DAYS	NONE, EXCEPT FOR PERIMETERS AND HQW ZONES.

PROJECT NO.	SHEET NO.
44856.3.28	EC-4
F.A. PROJECT NO. HSIP-1542(012)	

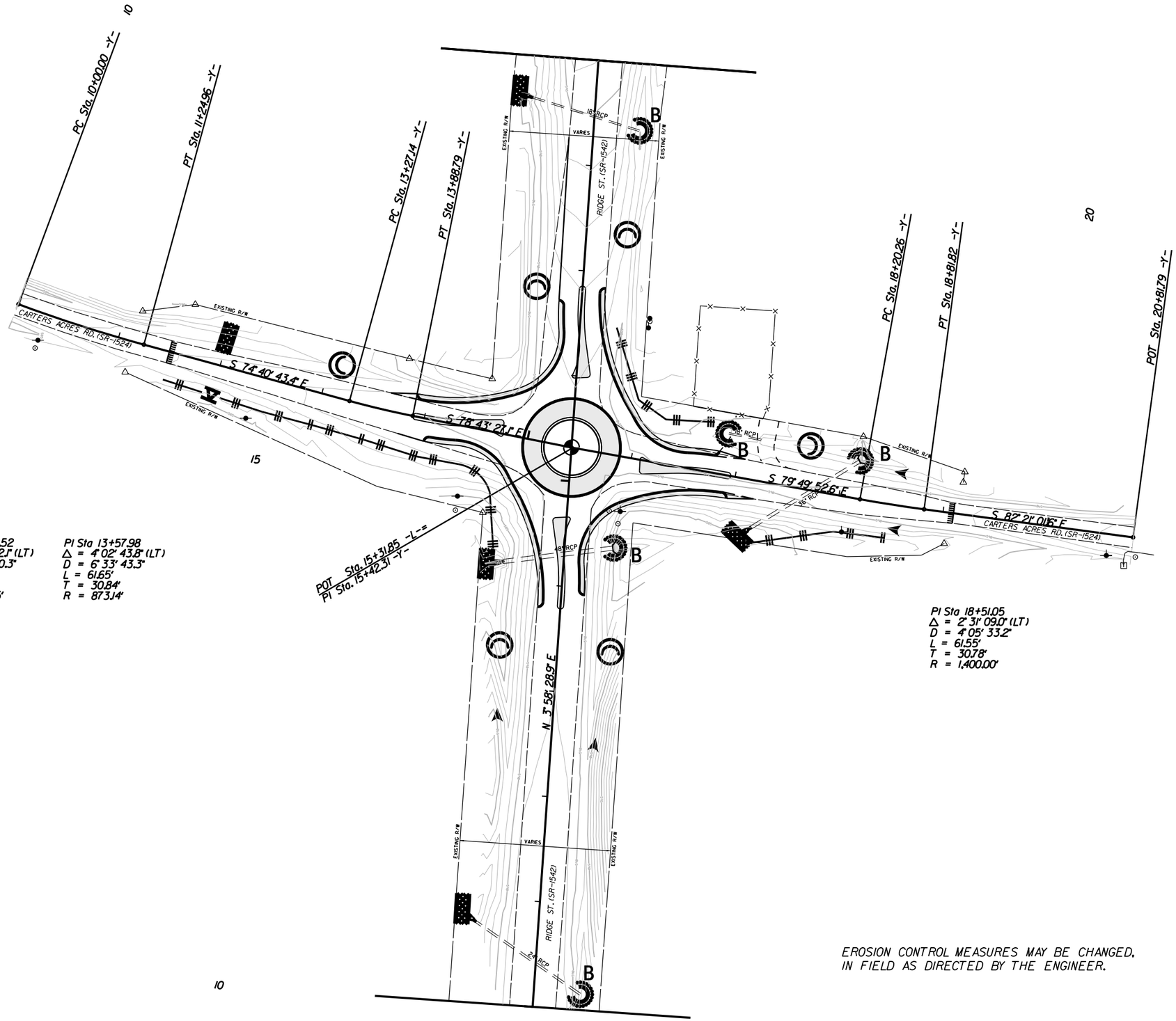

PI Sta 10+62.52
Δ = 5° 04' 42.1" (LT)
D = 4° 03' 50.3"
L = 124.96'
T = 62.52'
R = 1,409.85'

PI Sta 13+57.98
Δ = 4° 02' 43.8" (LT)
D = 6° 33' 43.3"
L = 61.65'
T = 30.84'
R = 873.14'

PI Sta 18+51.05
Δ = 2° 31' 09.0" (LT)
D = 4° 05' 33.2"
L = 61.55'
T = 30.78'
R = 1,400.00'

EROSION CONTROL MEASURES MAY BE CHANGED.
IN FIELD AS DIRECTED BY THE ENGINEER.

ROUNDABOUT AT THE INTERSECTION OF
RIDGE ST.(SR-1542) AND
CARTERS ACRES RD.(SR-1524)

		REVISIONS	
SCALE	1"=50'		
DATE	12-2019		
DWG. BY	JCB		
DESIGN BY	JCB		
APPROVED	JDH		

PROJECT NO.	SHEET NO.
44856.3.28	EC-4A
F.A. PROJECT NO.	HSIP-1542(012)

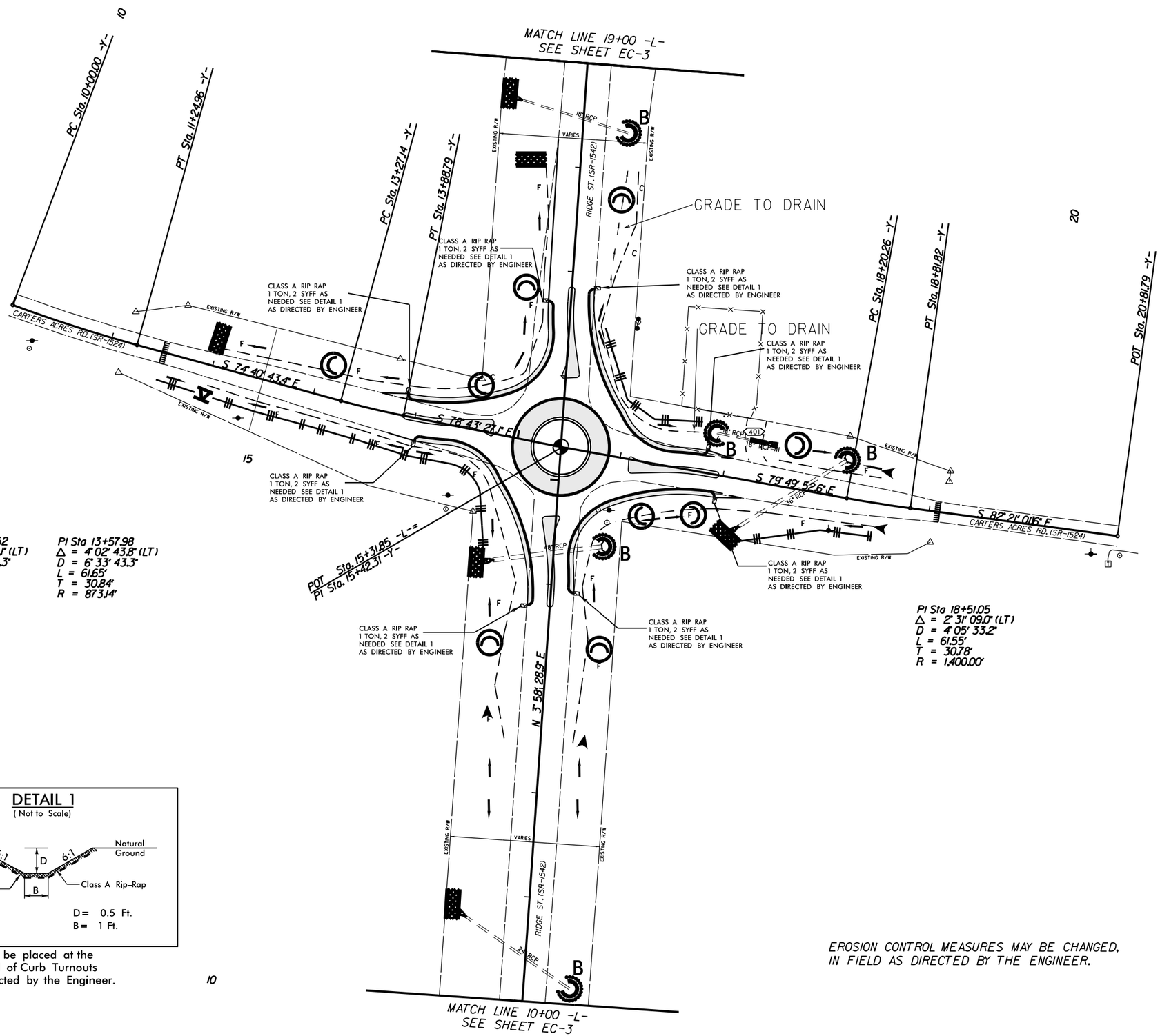

PI Sta 10+62.52
Δ = 5° 04' 42.1" (LT)
D = 4° 03' 50.3"
L = 124.96'
T = 62.52'
R = 1,409.85'

PI Sta 13+57.98
Δ = 4° 02' 43.8" (LT)
D = 6° 33' 43.3"
L = 61.65'
T = 30.84'
R = 873.14'

PI Sta 18+51.05
Δ = 2° 31' 09.0" (LT)
D = 4° 05' 33.2"
L = 61.55'
T = 30.78'
R = 1,400.00'

DETAIL 1
(Not to Scale)

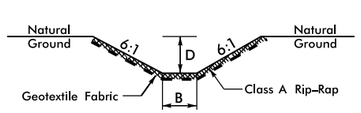

D= 0.5 Ft.
B= 1 Ft.

To be placed at the
end of Curb Turnouts
as directed by the Engineer.

EROSION CONTROL MEASURES MAY BE CHANGED.
IN FIELD AS DIRECTED BY THE ENGINEER.

ROUNDABOUT AT THE INTERSECTION OF
RIDGE ST.(SR-1542) AND
CARTERS ACRES RD.(SR-1524)

		REVISIONS	
SCALE	1"=50'		
DATE	12-2019		
DWG. BY	JCB		
DESIGN BY	JCB		
APPROVED	JDH		

PROJECT NO.	SHEET NO.
44856.3.28	EC-5
F.A. PROJECT NO. HSIP-1542(012)	

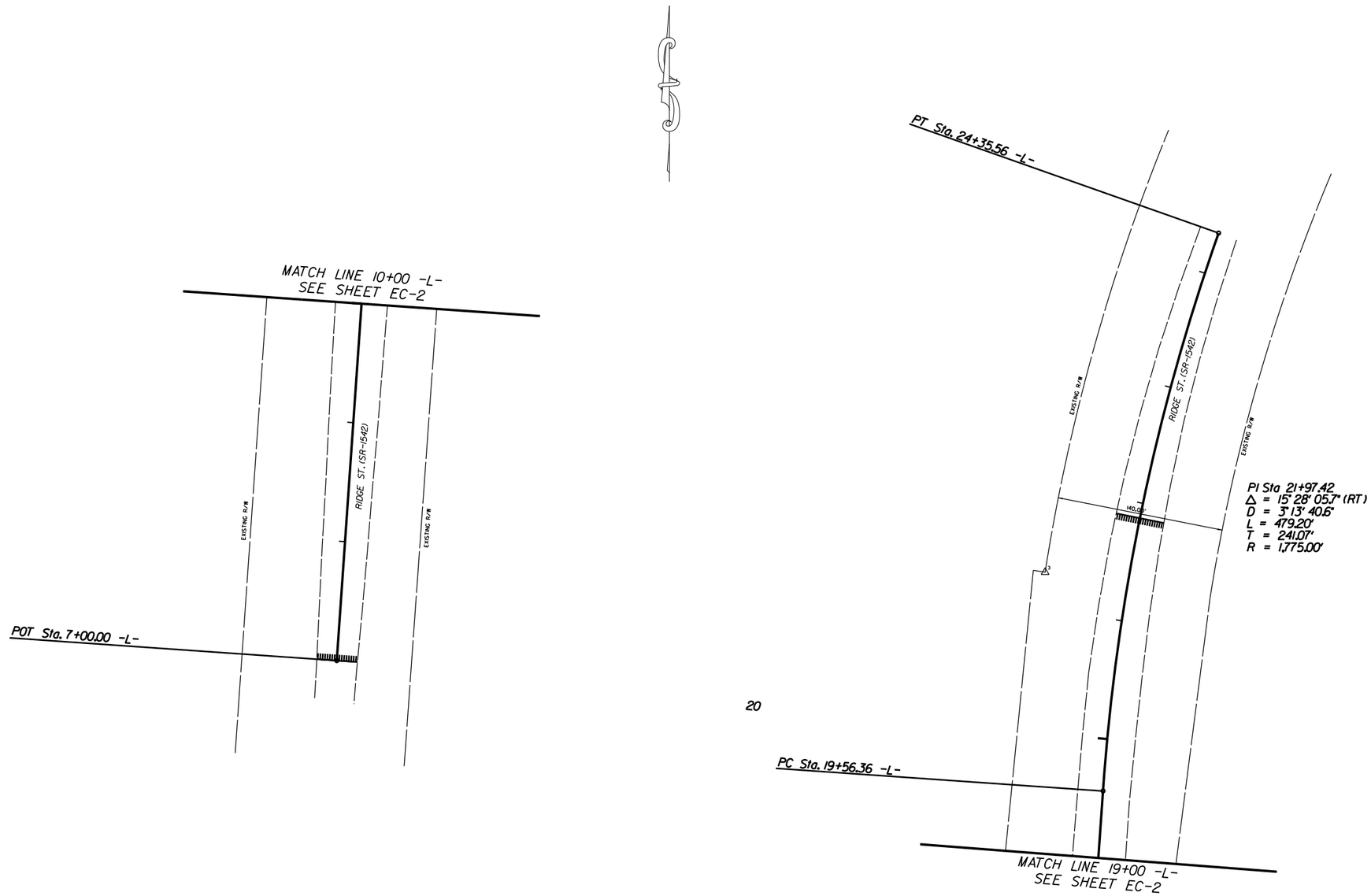

EROSION CONTROL MEASURES MAY BE CHANGED.
IN FIELD AS DIRECTED BY THE ENGINEER.

ROUNDABOUT AT THE INTERSECTION OF
RIDGE ST.(SR-1542) AND
CARTERS ACRES RD.(SR-1524)

		REVISIONS	
SCALE	1"=50'		
DATE	11-2019		
DWG. BY	JCB		
DESIGN BY	JCB		
APPROVED	JDH		

PROJECT NO.	SHEET NO.
44856.3.28	PMP-1
F.A. PROJECT NO. HSIP-1542(012)	

ROADWAY DESIGN ENGINEER

NORTH CAROLINA PROFESSIONAL SEAL 034357 ENGINEER SEAL MICHAEL STEPHEN KIRKPATRICK

DocuSigned by:

A92E75CC0FFB43B...

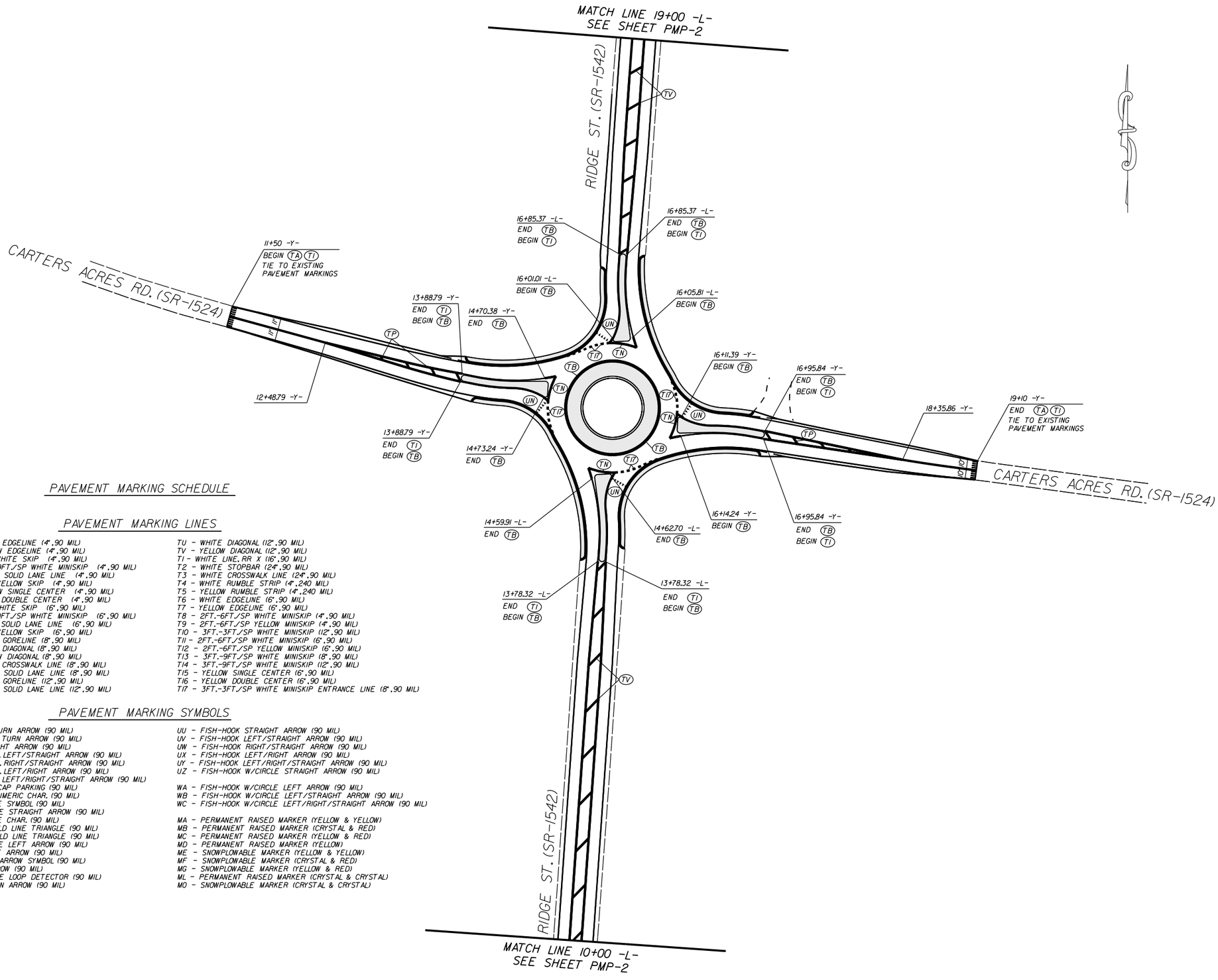

PAVEMENT MARKING SCHEDULE

PAVEMENT MARKING LINES

TA - WHITE EDGELINE (4",90 MIL)
TB - YELLOW EDGELINE (4",90 MIL)
TC - 10FT.WHITE SKIP (4",90 MIL)
TD - 3FT.-9FT./SP WHITE MINISKIP (4",90 MIL)
TE - WHITE SOLID LANE LINE (4",90 MIL)
TF - 10FT.YELLOW SKIP (4",90 MIL)
TH - YELLOW SINGLE CENTER (4",90 MIL)
TI - YELLOW DOUBLE CENTER (4",90 MIL)
TJ - 10FT.WHITE SKIP (6",90 MIL)
TK - 3FT.-9FT./SP WHITE MINISKIP (6",90 MIL)
TL - WHITE SOLID LANE LINE (6",90 MIL)
TM - 10FT.YELLOW SKIP (6",90 MIL)
TN - WHITE GORELINE (8",90 MIL)
TO - WHITE DIAGONAL (8",90 MIL)
TP - YELLOW DIAGONAL (8",90 MIL)
TQ - WHITE CROSSWALK LINE (8",90 MIL)
TR - WHITE SOLID LANE LINE (8",90 MIL)
TS - WHITE GORELINE (12",90 MIL)
TT - WHITE SOLID LANE LINE (12",90 MIL)

TU - WHITE DIAGONAL (12",90 MIL)
TV - YELLOW DIAGONAL (12",90 MIL)
T1 - WHITE LINE,RR X (16",90 MIL)
T2 - WHITE STOPBAR (24",90 MIL)
T3 - WHITE CROSSWALK LINE (24",90 MIL)
T4 - WHITE RUMBLE STRIP (4",240 MIL)
T5 - YELLOW RUMBLE STRIP (4",240 MIL)
T6 - WHITE EDGELINE (6",90 MIL)
T7 - YELLOW EDGELINE (6",90 MIL)
T8 - 2FT.-6FT./SP WHITE MINISKIP (4",90 MIL)
T9 - 2FT.-6FT./SP YELLOW MINISKIP (4",90 MIL)
T10 - 3FT.-3FT./SP WHITE MINISKIP (12",90 MIL)
T11 - 2FT.-6FT./SP WHITE MINISKIP (6",90 MIL)
T12 - 2FT.-6FT./SP YELLOW MINISKIP (6",90 MIL)
T13 - 3FT.-9FT./SP WHITE MINISKIP (8",90 MIL)
T14 - 3FT.-9FT./SP WHITE MINISKIP (12",90 MIL)
T15 - YELLOW SINGLE CENTER (6",90 MIL)
T16 - YELLOW DOUBLE CENTER (6",90 MIL)
T17 - 3FT.-3FT./SP WHITE MINISKIP ENTRANCE LINE (8",90 MIL)

PAVEMENT MARKING SYMBOLS

UA -LEFT TURN ARROW (90 MIL)
UB - RIGHT TURN ARROW (90 MIL)
UC - STRAIGHT ARROW (90 MIL)
UD - COMBO.LEFT/STRAIGHT ARROW (90 MIL)
UE - COMBO.RIGHT/STRAIGHT ARROW (90 MIL)
UF - COMBO.LEFT/RIGHT ARROW (90 MIL)
UG - COMBO.LEFT/RIGHT/STRAIGHT ARROW (90 MIL)
UH - HANDICAP PARKING (90 MIL)
UI - ALPHANUMERIC CHAR. (90 MIL)
UJ - BICYCLE SYMBOL (90 MIL)
UK - BICYCLE STRAIGHT ARROW (90 MIL)
UL - BICYCLE CHAR. (90 MIL)
UM - 12"YIELD LINE TRIANGLE (90 MIL)
UN - 24"YIELD LINE TRIANGLE (90 MIL)
UO - BICYCLE LEFT ARROW (90 MIL)
UP - MERGE ARROW (90 MIL)
UQ - RAMP ARROW SYMBOL (90 MIL)
UR - SHARROW (90 MIL)
US - BICYCLE LOOP DETECTOR (90 MIL)
UT - U-TURN ARROW (90 MIL)

UU - FISH-HOOK STRAIGHT ARROW (90 MIL)
UV - FISH-HOOK LEFT/STRAIGHT ARROW (90 MIL)
UW - FISH-HOOK RIGHT/STRAIGHT ARROW (90 MIL)
UX - FISH-HOOK LEFT/RIGHT ARROW (90 MIL)
UY - FISH-HOOK LEFT/RIGHT/STRAIGHT ARROW (90 MIL)
UZ - FISH-HOOK W/CIRCLE STRAIGHT ARROW (90 MIL)

WA - FISH-HOOK W/CIRCLE LEFT ARROW (90 MIL)
WB - FISH-HOOK W/CIRCLE LEFT/STRAIGHT ARROW (90 MIL)
WC - FISH-HOOK W/CIRCLE LEFT/RIGHT/STRAIGHT ARROW (90 MIL)

MA - PERMANENT RAISED MARKER (YELLOW & YELLOW)
MB - PERMANENT RAISED MARKER (CRYSTAL & RED)
MC - PERMANENT RAISED MARKER (YELLOW & RED)
MD - PERMANENT RAISED MARKER (YELLOW)
ME - SNOWPLOWABLE MARKER (YELLOW & YELLOW)
MF - SNOWPLOWABLE MARKER (CRYSTAL & RED)
MG - SNOWPLOWABLE MARKER (YELLOW & RED)
ML - PERMANENT RAISED MARKER (CRYSTAL & CRYSTAL)
MO - SNOWPLOWABLE MARKER (CRYSTAL & CRYSTAL)

ROUNDABOUT AT THE INTERSECTION OF
RIDGE ST.(SR-1542) AND
CARTERS ACRES RD.(SR-1524)

		REVISIONS	
SCALE	1"=50'		
DATE	10-2019		
DWG. BY	JCB		
DESIGN BY	JCB		
APPROVED	JDH		

DIVISION OF HIGHWAYS
STATE OF NORTH CAROLINA
DEPARTMENT OF TRANSPORTATION

PROJECT NO.	SHEET NO.
44856.3.28	PMP-2
F.A. PROJECT NO. HSIP-1542(012)	

ROADWAY DESIGN ENGINEER

NORTH CAROLINA PROFESSIONAL SEAL 034357 ENGINEER SEAN MICHAEL EPPERSON

DocuSigned by:

A92E75CC0FFB43B...

PAVEMENT MARKING SCHEDULE

PAVEMENT MARKING LINES

TA - WHITE EDGELINE (4",90 MIL)
TB - YELLOW EDGELINE (4",90 MIL)
TC - 10FT.WHITE SKIP (4",90 MIL)
TD - 3FT.-9FT./SP WHITE MINISKIP (4",90 MIL)
TE - WHITE SOLID LANE LINE (4",90 MIL)
TF - 10FT.YELLOW SKIP (4",90 MIL)
TH - YELLOW SINGLE CENTER (4",90 MIL)
TI - YELLOW DOUBLE CENTER (4",90 MIL)
TJ - 10FT.WHITE SKIP (6",90 MIL)
TK - 3FT.-9FT./SP WHITE MINISKIP (6",90 MIL)
TL - WHITE SOLID LANE LINE (6",90 MIL)
TM - 10FT.YELLOW SKIP (6",90 MIL)
TN - WHITE GORELINE (8",90 MIL)
TO - WHITE DIAGONAL (8",90 MIL)
TP - YELLOW DIAGONAL (8",90 MIL)
TQ - WHITE CROSSWALK LINE (8",90 MIL)
TR - WHITE SOLID LANE LINE (8",90 MIL)
TS - WHITE GORELINE (12",90 MIL)
TT - WHITE SOLID LANE LINE (12",90 MIL)
TU - WHITE DIAGONAL (12",90 MIL)
TV - YELLOW DIAGONAL (12",90 MIL)
TI - WHITE LINE,RR X (16",90 MIL)
T2 - WHITE STOPBAR (24",90 MIL)
T3 - WHITE CROSSWALK LINE (24",90 MIL)
T4 - WHITE RUMBLE STRIP (4",240 MIL)
T5 - YELLOW RUMBLE STRIP (4",240 MIL)
T6 - WHITE EDGELINE (6",90 MIL)
T7 - YELLOW EDGELINE (6",90 MIL)
T8 - 2FT.-6FT./SP WHITE MINISKIP (4",90 MIL)
T9 - 2FT.-6FT./SP YELLOW MINISKIP (4",90 MIL)
T10 - 3FT.-3FT./SP WHITE MINISKIP (12",90 MIL)
T11 - 2FT.-6FT./SP WHITE MINISKIP (6",90 MIL)
T12 - 2FT.-6FT./SP YELLOW MINISKIP (6",90 MIL)
T13 - 3FT.-9FT./SP WHITE MINISKIP (8",90 MIL)
T14 - 3FT.-9FT./SP WHITE MINISKIP (12",90 MIL)
T15 - YELLOW SINGLE CENTER (6",90 MIL)
T16 - YELLOW DOUBLE CENTER (6",90 MIL)
T17 - 3FT.-3FT./SP WHITE MINISKIP ENTRANCE LINE (8",90 MIL)

PAVEMENT MARKING SYMBOLS

UA -LEFT TURN ARROW (90 MIL)
UB - RIGHT TURN ARROW (90 MIL)
UC - STRAIGHT ARROW (90 MIL)
UD - COMBO.LEFT/STRAIGHT ARROW (90 MIL)
UE - COMBO.RIGHT/STRAIGHT ARROW (90 MIL)
UF - COMBO.LEFT/RIGHT ARROW (90 MIL)
UG - COMBO.LEFT/RIGHT/STRAIGHT ARROW (90 MIL)
UH - HANDICAP PARKING (90 MIL)
UI - ALPHANUMERIC CHAR.(90 MIL)
UJ - BICYCLE SYMBOL (90 MIL)
UK - BICYCLE STRAIGHT ARROW (90 MIL)
UL - BICYCLE CHAR.(90 MIL)
UM - 12"YIELD LINE TRIANGLE (90 MIL)
UN - 24"YIELD LINE TRIANGLE (90 MIL)
UO - BICYCLE LEFT ARROW (90 MIL)
UP - MERGE ARROW (90 MIL)
UQ - RAMP ARROW SYMBOL (90 MIL)
UR - SHARROW (90 MIL)
US - BICYCLE LOOP DETECTOR (90 MIL)
UT - U-TURN ARROW (90 MIL)
UU - FISH-HOOK STRAIGHT ARROW (90 MIL)
UV - FISH-HOOK LEFT/STRAIGHT ARROW (90 MIL)
UW - FISH-HOOK RIGHT/STRAIGHT ARROW (90 MIL)
UX - FISH-HOOK LEFT/RIGHT ARROW (90 MIL)
UY - FISH-HOOK LEFT/RIGHT/STRAIGHT ARROW (90 MIL)
UZ - FISH-HOOK W/CIRCLE STRAIGHT ARROW (90 MIL)

WA - FISH-HOOK W/CIRCLE LEFT ARROW (90 MIL)
WB - FISH-HOOK W/CIRCLE LEFT/STRAIGHT ARROW (90 MIL)
WC - FISH-HOOK W/CIRCLE LEFT/RIGHT/STRAIGHT ARROW (90 MIL)

MA - PERMANENT RAISED MARKER (YELLOW & YELLOW)
MB - PERMANENT RAISED MARKER (CRYSTAL & RED)
MC - PERMANENT RAISED MARKER (YELLOW & RED)
MD - PERMANENT RAISED MARKER (YELLOW)
ME - SNOWPLOWABLE MARKER (YELLOW & YELLOW)
MF - SNOWPLOWABLE MARKER (CRYSTAL & RED)
MG - SNOWPLOWABLE MARKER (YELLOW & RED)
ML - PERMANENT RAISED MARKER (CRYSTAL & CRYSTAL)
MO - SNOWPLOWABLE MARKER (CRYSTAL & CRYSTAL)

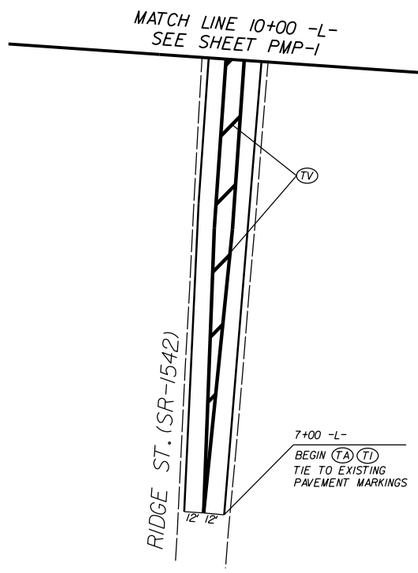

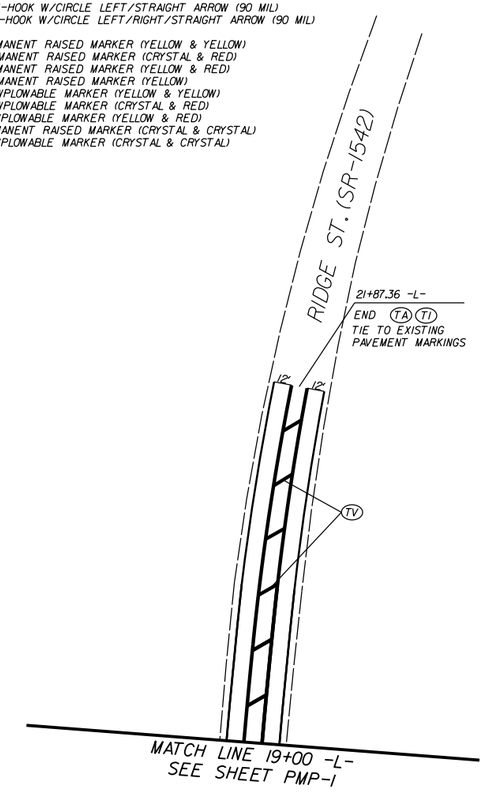

ROUNDABOUT AT THE INTERSECTION OF
RIDGE ST.(SR-1542) AND
CARTERS ACRES RD.(SR-1524)

			REVISIONS	
SCALE	1"=50'	DIVISION OF HIGHWAYS STATE OF NORTH CAROLINA DEPARTMENT OF TRANSPORTATION		
DATE	11-2019			
DWG. BY	JCB			
DESIGN BY	JCB			
APPROVED	JDH			

PROJECT REFERENCE NO.	SHEET NO.
W-5710AB	SIGN-1

APPROVED: DocuSigned by: Renee B. Roach 3EB4390BD316431...

DATE: 2/19/2021

SEAL

NORTH CAROLINA PROFESSIONAL SEAL 024921 ENGINEER RENEE B. ROACH

DOCUMENT NOT CONSIDERED FINAL UNLESS ALL SIGNATURES COMPLETED

STATE OF NORTH CAROLINA
DEPARTMENT OF TRANSPORTATION

SIGNING PLAN
STANLY COUNTY

LOCATION: INTERSECTION OF CARTERS ACRES RD. (SR–1524) AND RIDGE ST. (SR–1542)

T.I.P.: W–5710AB

CONTRACT: 44856.3.28

ROADWAY STANDARD DRAWING

THE FOLLOWING ROADWAY STANDARDS AS APPEAR IN "ROADWAY STANDARD DRAWINGS" - PROJECT SERVICES UNIT - N.C. DEPARTMENT OF TRANSPORTATION - RALEIGH, N.C., DATED JANUARY 2018 ARE APPLICABLE TO THIS PROJECT AND BY REFERENCE HEREBY ARE CONSIDERED A PART OF THESE PLANS:

STD. NO.	
904.10	ORIENTATION OF GROUND MOUNTED SIGNS
904.50	MOUNTING OF TYPE 'D', 'E' AND 'F' SIGNS ON 'U' CHANNEL POSTS
910.40	SINGLE/TWO LANE ROUNDABOUT WITH PEDESTRIAN

GENERAL NOTES

- SIGNS FURNISHED BY STATE
- CONFIRM IN WRITING AT LEAST 4 MONTHS IN ADVANCE, THE ACTUAL DATE THE DEPARTMENT FURNISHED SIGNS WILL BE REQUIRED.
- ALL TYPE 'D' SIGNS SHALL BE MOUNTED ON TWO U-CHANNEL POSTS UNLESS OTHERWISE INDICATED ON THE PLANS.
- IF REMOVAL OR RELOCATION OF SIGNS ON PRIVATE STREET (NON-STATE MAINTAINED) IS REQUIRED DUE TO CONSTRUCTION, THE CONTRACTOR SHALL INFORM THE ENGINEER. THE WORK WILL BE COMPLETED BY OTHERS.
- WHEN NOT STATIONED OR DIMENSIONED ON PLANS, ALL 'E' AND 'F' SIGNS SHALL BE FIELD LOCATED BY THE ENGINEER
- ALL EXISTING SIGNS ON "U" CHANNEL POST WITHIN THE PROJECT LIMITS SHALL BE REMOVED AND DISPOSED OF UNLESS OTHERWISE NOTED ON PLANS.
- WHEN EXISTING SIGNS ARE REMOVED AND INSTALLED ON NEW SUPPORTS, THE RE-ERECTION SHALL IMMEDIATELY FOLLOW THE REMOVAL.
- THE BACKGROUND FOR TYPE E & F SIGNS SHALL BE TYPE C REFLECTIVE SHEETING.
- SEE ROADWAY PLANS FOR GUARD/GUIDE RAIL DETAILS.

SUMMARY OF QUANTITIES

ITEM NO. DESC. NO.	ITEM NO. SECT. NO.	ITEM DESCRIPTION	QUANTITY	UNIT
4072000000	903	SUPPORTS, 3 LB STEEL U-CHANNEL	274	L.F.
4102000000	904	SIGN ERECTION, TYPE E	24	EA.
4155000000	907	DISPOSAL OF SIGN SYSTEM, U-CHANNEL	2	EA.

PLAN PREPARED BY: N.C.D.O.T. SIGNING AND DELINEATION UNIT

KELVIN JORDAN — SIGNING & DELINEATION REGIONAL ENGINEER

ERIC WARD — SIGNING & DELINEATION PROJECT DESIGN ENGINEER

STATE OF NORTH CAROLINA DEPARTMENT OF TRANSPORTATION

TYPE "E" SIGNS

401 QUANTITY REQ'D 8

36 X 36 X 36
R1-2

ONE "U" POST PER SIGN

404 QUANTITY REQ'D 4

30 X 24
R6-4

ONE "U" POST PER SIGN

402 QUANTITY REQ'D 4

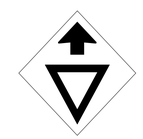

30 X 30
W3-2

ONE "U" POST PER SIGN

405 QUANTITY REQ'D 2

Carters Acres Rd

36 X 8
W16-8P
SEE TYPE "E" SIGN DESIGNS

MOUNT BELOW SIGN 403 IN 2 LOCATIONS

403 QUANTITY REQ'D 4

36 X 36
W2-6

ONE "U" POST PER SIGN

406 QUANTITY REQ'D 2

Ridge St

24 X 8
W16-8P
SEE TYPE "E" SIGN DESIGNS

MOUNT BELOW SIGN 403 IN 2 LOCATIONS

PROJECT NOTES

1. DISPOSAL OF SIGN SYSTEM, U-CHANNEL

INDEX

SHEET NO.	DESCRIPTION
SIGN-1	TITLE SHEET & TYPE "E" SIGNS
SIGN-2	TYPE "E" SIGN DESIGNS SHEET
SIGN-3	SIGNING PLAN SHEETS

02/18/21
SSCU\Western Region\Div 10\W-5710AB\W-5710AB_sgn_psh_1.dgn
jserdieward

TIP NO.	SHEET NO.
W-5710AB	SIGN-2

APPROVED: DocuSigned by: Renee B. Roach 3EB4360BD316431...

DATE: 8/25/2020

SEAL

NORTH CAROLINA PROFESSIONAL SEAL 024921 ENGINEER RENEE B. ROACH

DOCUMENT NOT CONSIDERED FINAL UNLESS ALL SIGNATURES COMPLETED

SIGN NUMBER: 405
TYPE: E
QUANTITY: 2

SIGN WIDTH: 3'-0"
HEIGHT: 0'-8"
TOTAL AREA: 2.0 Sq.Ft.

BORDER TYPE: FLUSH
RECESS: 0.38"
WIDTH: 0.38"
RADII: 1.5"

NO. Z BARS:
LENGTH:

BACKG COLOR: Yellow
COPY COLOR: Black

SYMBOL	X	Y	WID	HT

MAT'L: 0.125" (3.2 mm) ALUMINUM

DESIGN BY: E WARD
PROJECT ID: W-5710AB

CHECKED BY:
LOCATION:

Apr 28, 2020
DIV: 10

USE NOTES: 1,2

1. Legend and border(except those that are colored black) shall be direct applied Grade C sheeting.
2. Background shall be Grade C reflective sheeting.

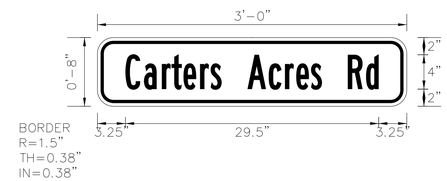

Spacing Factor is 1 unless specified otherwise

LETTER POSITIONS

Letter spacings are to start of next letter

		C	a	r	t	e	r	s		A	c	r	e	s		R	d										Series/Size Text Length
	3.3	2.2	2.1	1.1	1.4	1.9	1.2	1.3	3	2.5	1.9	1.3	1.7	1.3	3	2.1	1.5	3.3									B 2000 29.5

FILENAME: W-5701AB Guidsign_English

NORTH CAROLINA D.O.T. SIGN DETAIL

SIGN NUMBER: 406
TYPE: E
QUANTITY: 2

SIGN WIDTH: 2'-0"
HEIGHT: 0'-8"
TOTAL AREA: 1.3 Sq.Ft.

BORDER TYPE: FLUSH
RECESS: 0.38"
WIDTH: 0.38"
RADII: 1.5"

NO. Z BARS:
LENGTH:

BACKG COLOR: Yellow
COPY COLOR: Black

SYMBOL	X	Y	WID	HT

MAT'L: 0.125" (3.2 mm) ALUMINUM

DESIGN BY: E WARD
PROJECT ID: W-5710AB

CHECKED BY:
LOCATION:

Apr 28, 2020
DIV: 10

USE NOTES: 1,2

1. Legend and border(except those that are colored black) shall be direct applied Grade C sheeting.
2. Background shall be Grade C reflective sheeting.

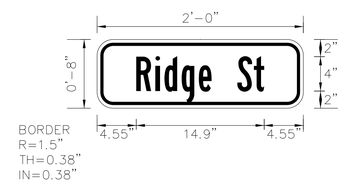

Spacing Factor is 1 unless specified otherwise

LETTER POSITIONS

Letter spacings are to start of next letter

		R	i	d	g	e		S	t		Series/Size Text Length
	4.6	2.2	1	2	2	1.5	3	1.9	1.2	4.6	B 2000 14.9

FILENAME: W-5701AB Guidsign_English

NORTH CAROLINA D.O.T. SIGN DETAIL

TYPE "E" SIGN DESIGNS

05/07/20
S:\S&DU\Western Region\Div 10\W-5710AB\W-5701AB Guidsign_English.dgn
User:rcward

TIP NO.	SHEET NO.
W-5710AB	SIGN-3

APPROVED: DocuSigned by: Renee B. Roach 3EB43608D316431...

DATE: 2/19/2021

SEAL

NORTH CAROLINA PROFESSIONAL SEAL 024921 ENGINEER RENEE B. ROACH

DOCUMENT NOT CONSIDERED FINAL UNLESS ALL SIGNATURES COMPLETED

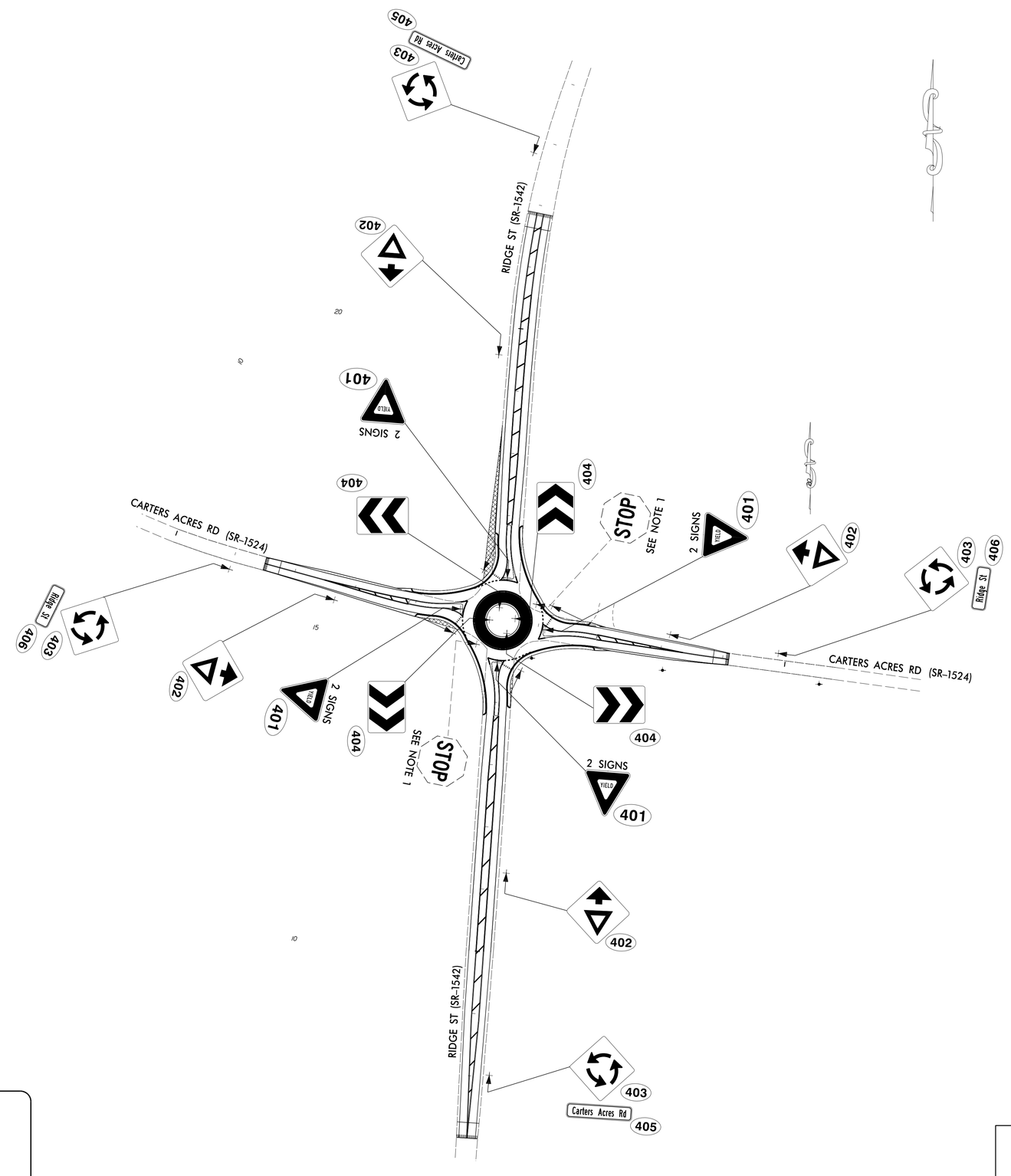

PROJECT NOTES

1. DISPOSAL OF SIGN SYSTEM, U-CHANNEL

SIGNING DETAIL

02/19/21
STS&DU\Western Region\Div 10\W-5710AB\W-5710AB_sgn_psh_3.dgn
User:rcward

PROJECT NO.	SHEET NO.
44856.3.28	TCP-1
F.A. PROJECT NO. HSIP-1542(012)	

ROADWAY DESIGN ENGINEER

NORTH CAROLINA PROFESSIONAL SEAL 034357 ENGINEER SEAN MICHAEL EPPERSON

DocuSigned by:

A92E75CC0FFB43B...

OFFSITE DETOUR

OFFSITE DETOUR TO BE INSTALLED AND MAINTAINED BY NCDOT.
THE CONTRACTOR IS RESPONSIBLE FOR THE BARRACADES ON THE PROJECT. SEE SHEET TCP-2

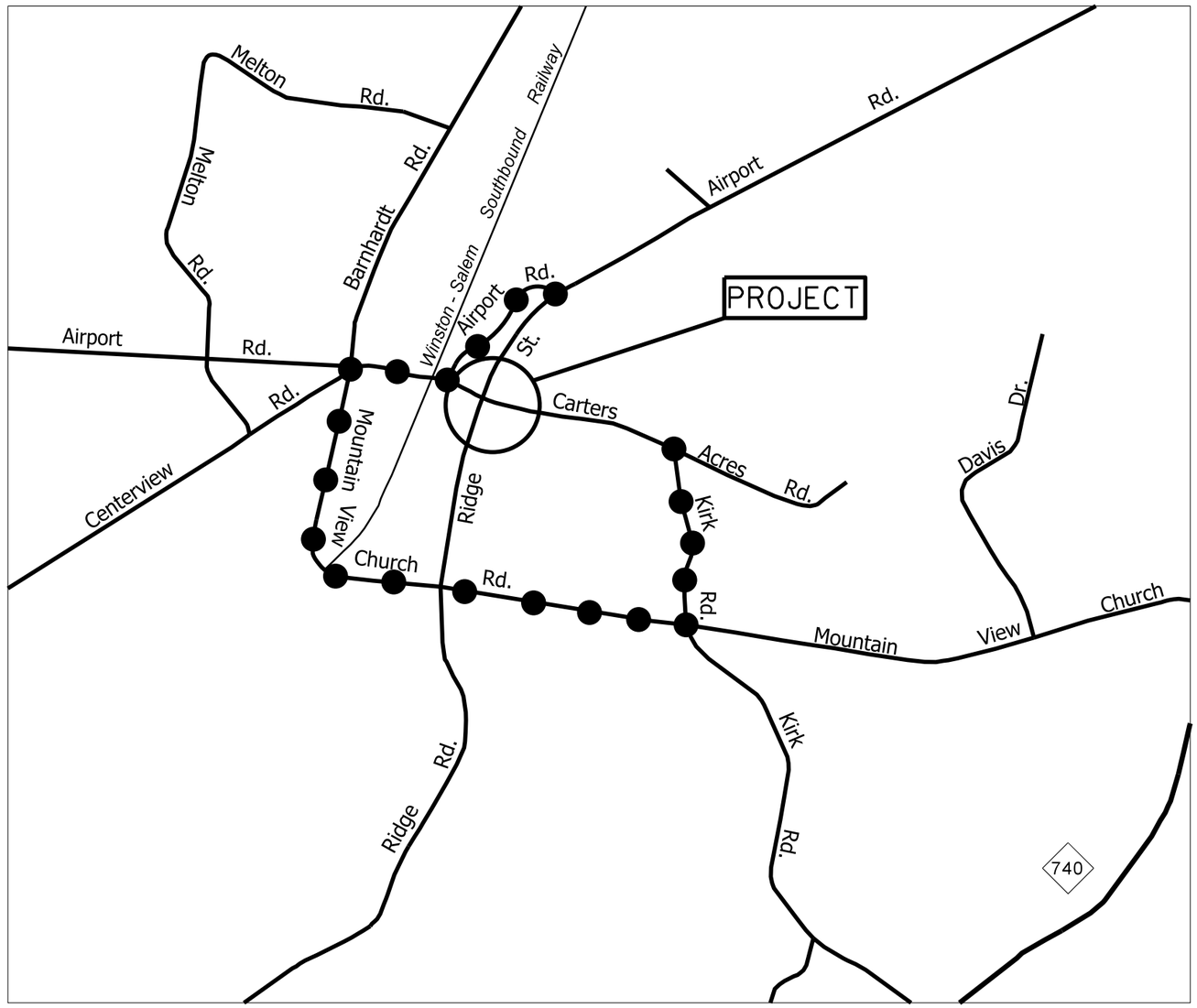

NOTE: CONTRACTOR SHALL CONTACT
SALINA BLALOCK AT 704-244-8270
TWO WEEKS PRIOR TO ROAD CLOSURE.

DETOUR ROUTE

ROUNDABOUT AT THE INTERSECTION OF
RIDGE ST.(SR-1542) AND
CARTER ACRES RD.(SR-1524)

		REVISIONS	
SCALE	N/A		
DATE	1-2020		
DWG. BY	JCB		
DESIGN BY	JCB		
APPROVED	JDH		

PROJECT NO.	SHEET NO.
44856.3.28	TCP-2
F.A. PROJECT NO. HSIP-1542(012)	

ROADWAY DESIGN ENGINEER

NORTH CAROLINA PROFESSIONAL SEAL 034357 ENGINEER SEAN MICHAEL HARRISON

DocuSigned by:

A92E75CC0FFB43B...

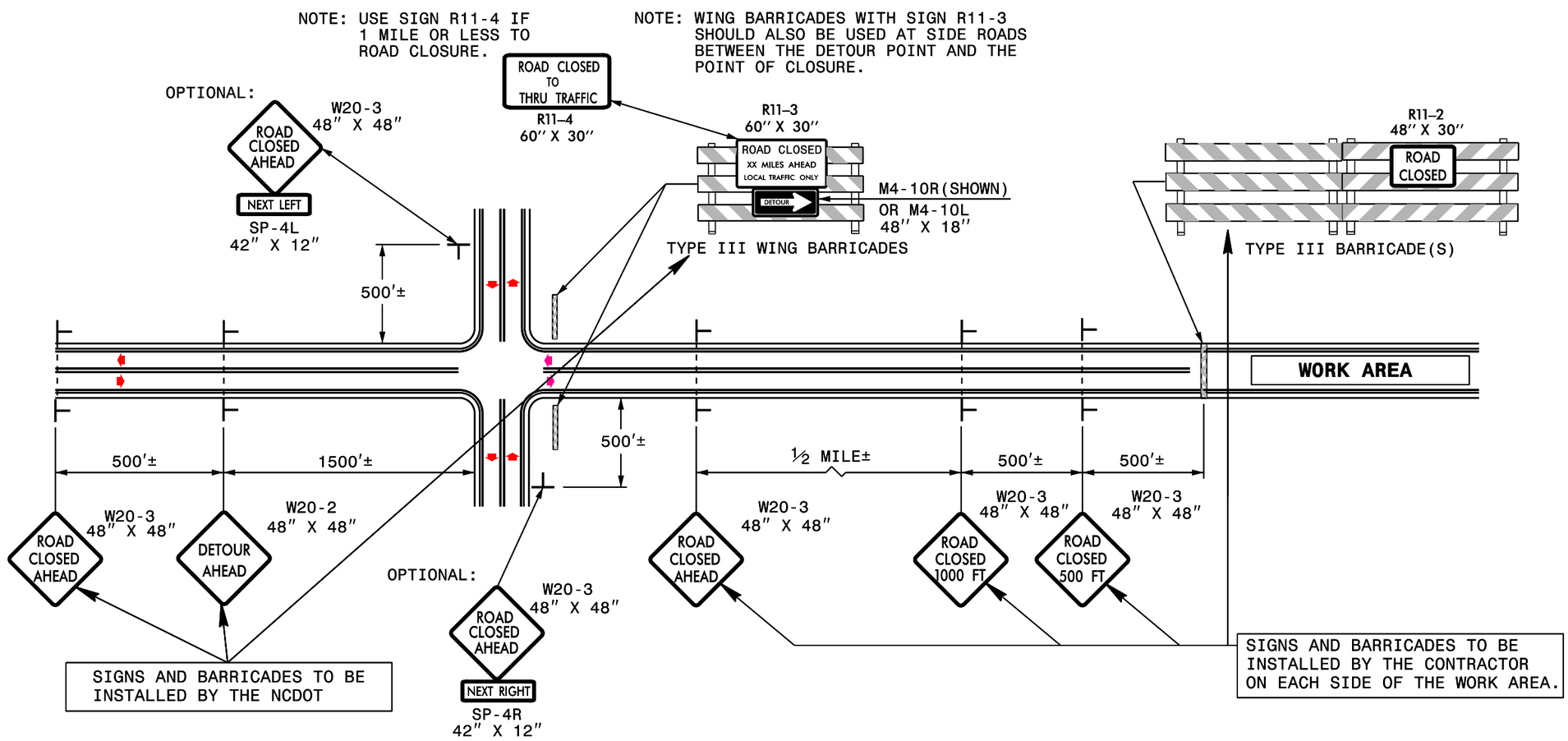

GENERAL NOTES

1-IF NECESSARY USE THIS STD. FOR TWO-LANE, TWO-WAY, AND MULTILANE DIVIDED AND UNDIVIDED ROADWAYS.

2-INSTALLATION OF DETOUR ROUTING PANELS, TEMPORARY ROUTE MARKERS, DESTINATION SIGNS, AND ANY NECESSARY MODIFICATIONS TO EXISTING OR PROPOSED REGULATORY OR WARNING SIGNS WILL BE MADE BY NCDOT FORCES UNLESS OTHERWISE DESIGNATED IN THE PLANS. PROVIDE A MINIMUM 21 CALENDAR DAY NOTICE TO STATE FORCES BEFORE A ROADWAY IS CLOSED TO TRAFFIC SUCH THAT THE NECESSARY PROVISIONS CAN BE MADE TO INSTALL DETOUR ROUTE SIGNS, INFORM LOCAL EMERGENCY AND LAW ENFORCEMENT PERSONNEL, SCHOOLS, OR ANY OTHER PARTIES AFFECTED BY THE ROAD CLOSURE.

3-INSTALL SIGNS BEFORE THE BARRICADES WHEN CLOSING THE ROADWAY TO TRAFFIC. REMOVE BARRICADES BEFORE SIGNS WHEN OPENING THE ROADWAY TO TRAFFIC. INSTALL/REMOVE SIGNS AND BARRICADES WITHIN THE SAME CALENDAR DAY.

4-USE ADDITIONAL TYPE III BARRICADES IN STAGGERED LOCATIONS SUPPLEMENTED WITH SIGN R11-4 "ROAD CLOSED TO THRU TRAFFIC" IN THE EVENT THAT TRAFFIC MUST BE MAINTAINED BEYOND THE DETOUR POINT.

5-DO NOT DISPLAY FRACTIONS OR DECIMALS ON SIGN R11-3 "ROAD CLOSED XX MILES AHEAD".

6-POSITION WING BARRICADES ON THE SHOULDERS AND SLOPE THE STRIPES DOWNWARD IN THE DIRECTION TOWARD WHICH TRAFFIC MUST TURN IN DETOURING.

7-USE PORTABLE SIGNS IF ROAD CLOSURE IS TO BE IMPLEMENTED FOR LESS THAN ONE DAY OR FOR EMERGENCIES.

LEGEND

- STATIONARY SIGN
- DIRECTION OF TRAFFIC FLOW

ROUNDABOUT AT THE INTERSECTION OF RIDGE ST.(SR-1542) AND CARTER ACRES RD.(SR-1524)

		REVISIONS	
SCALE	N/A		
DATE	1-2020		
DWG. BY	JCB		
DESIGN BY	JCB		
APPROVED	JDH		

DIVISION OF HIGHWAYS STATE OF NORTH CAROLINA

0 2.5 5	PROJ. REFERENCE NO.	SHEET NO.
	44856.3.28	X-1

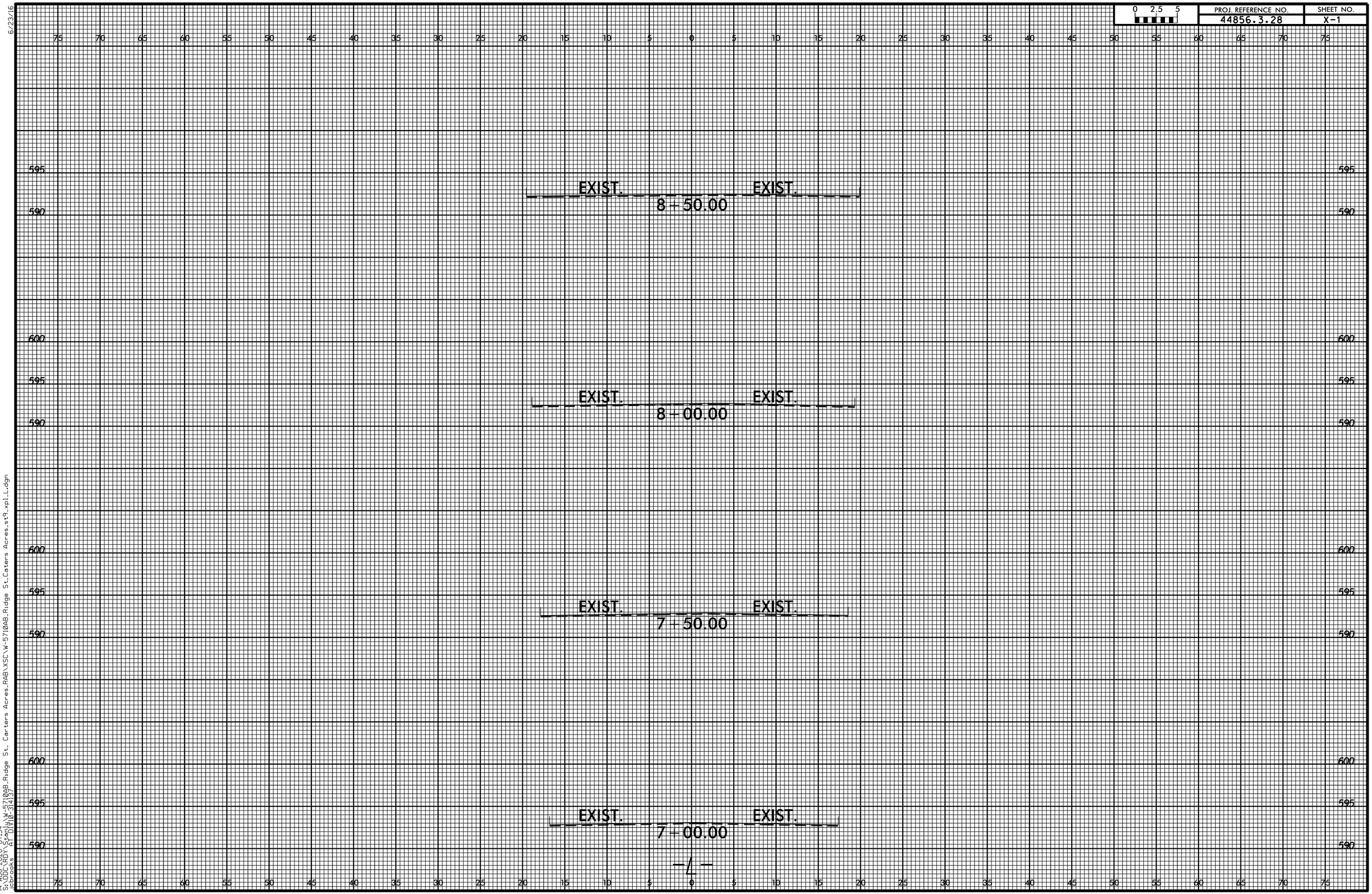

6/23/16

14-AUG-2020 07:34
S:\DDCVRDY\Stanly\W-5710AB_Ridge St. Carters Acres_RAB\XSC\W-5710AB_Ridge St_Caters Acres_st9_xpl_L.dgn
ebrooks AT DIV10-31413?

0 2.5 5	PROJ. REFERENCE NO.	SHEET NO.
	44856.3.28	X-2

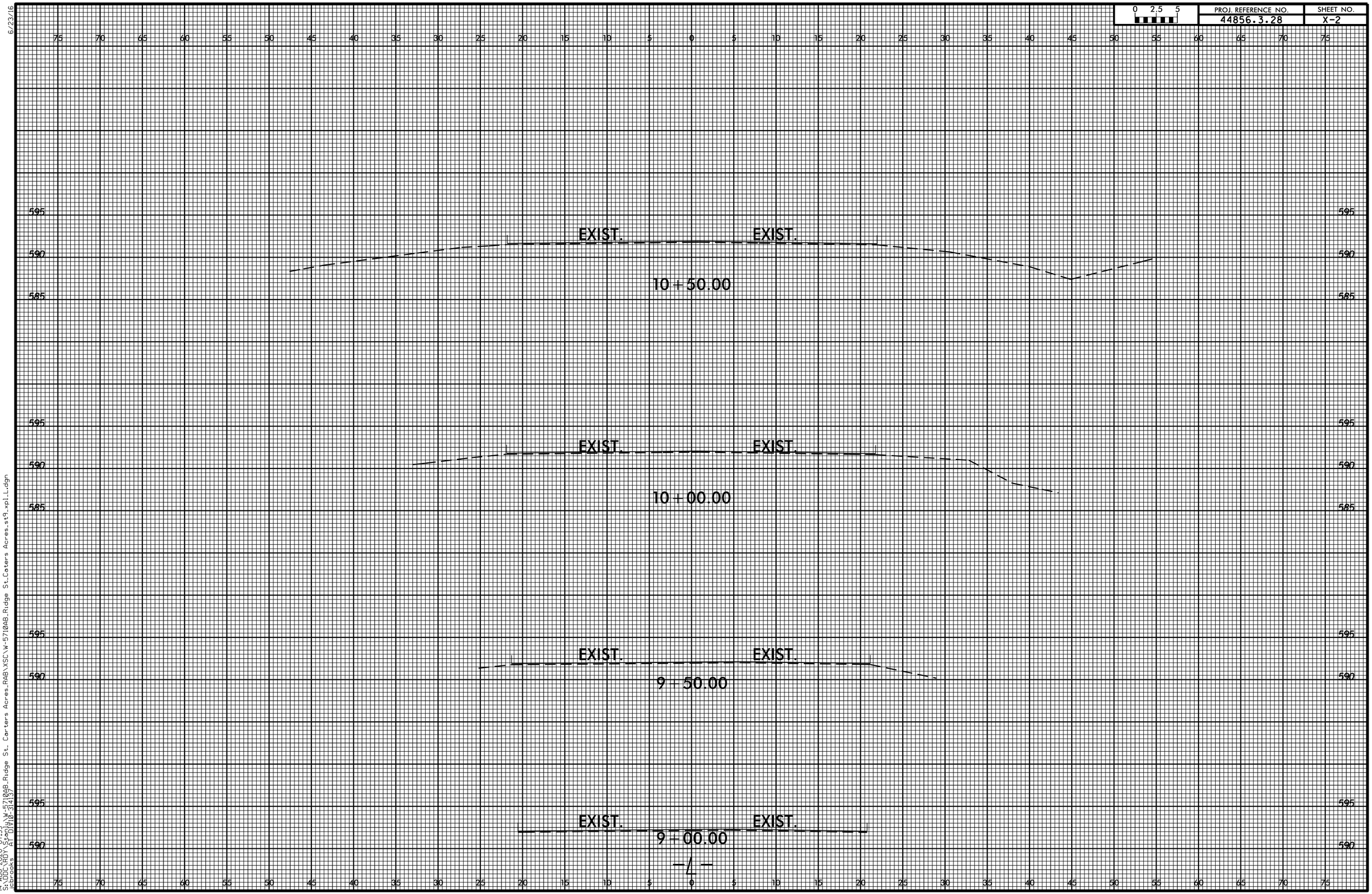

6/23/16

14-AUG-2020 07:35
S:\DDCYRDY\Stanly\W-5710AB_Ridge St. Carters Acres_RAB\XSC\W-5710AB_Ridge St_Caters Acres_st9_xpl_L.dgn
ebrooks AT DIV10-31413?

0 2.5 5	PROJ. REFERENCE NO.	SHEET NO.
	44856.3.28	X-3

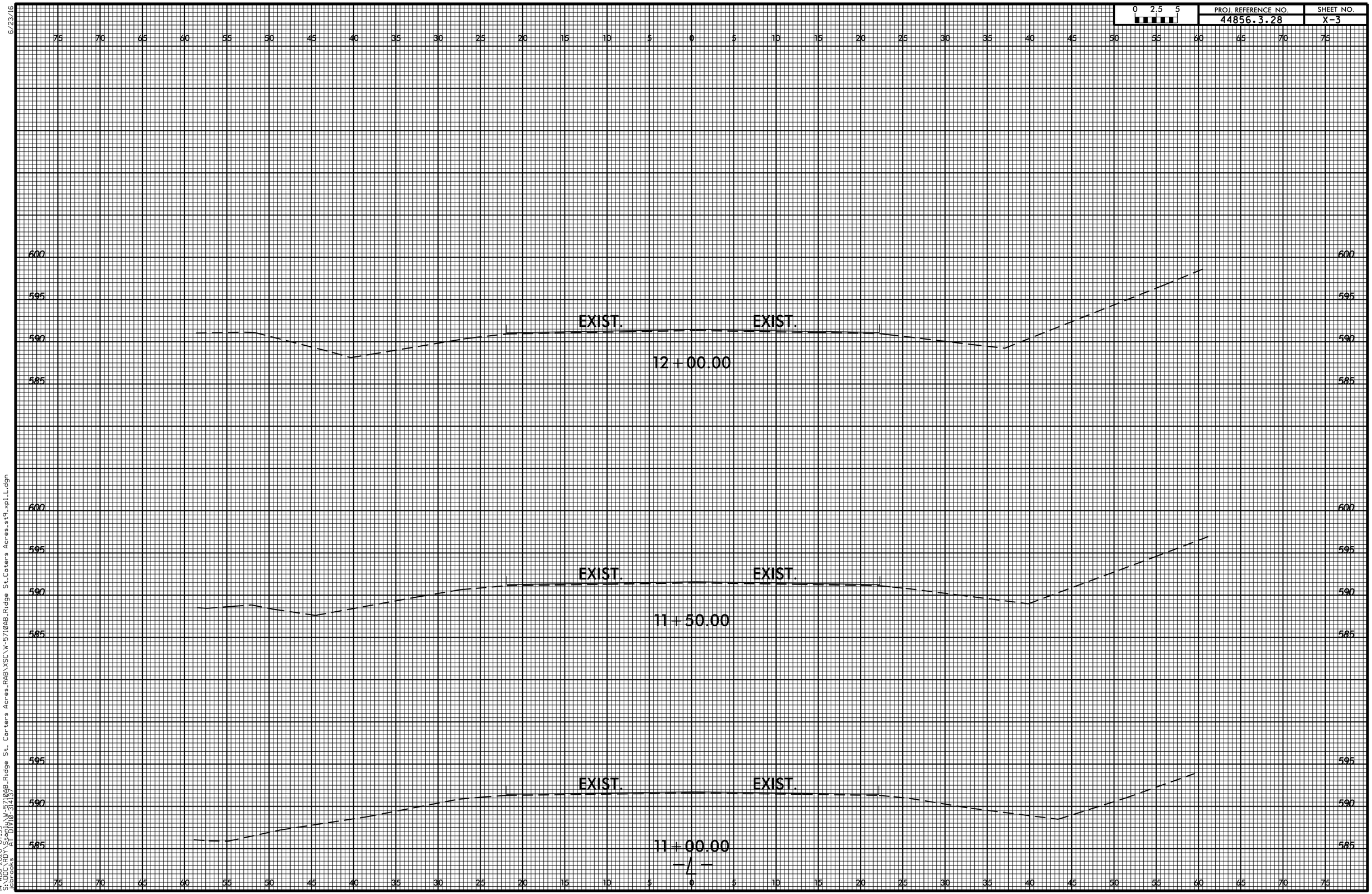

6/23/16

14-AUG-2020 07:35
S:\DDCYRDY\Stanly\W-5710AB_Ridge St. Carters Acres_RAB\XSC\W-5710AB_Ridge St_Caters Acres_st9_xpl_L.dgn
jebrooks AT DIV10-31413?

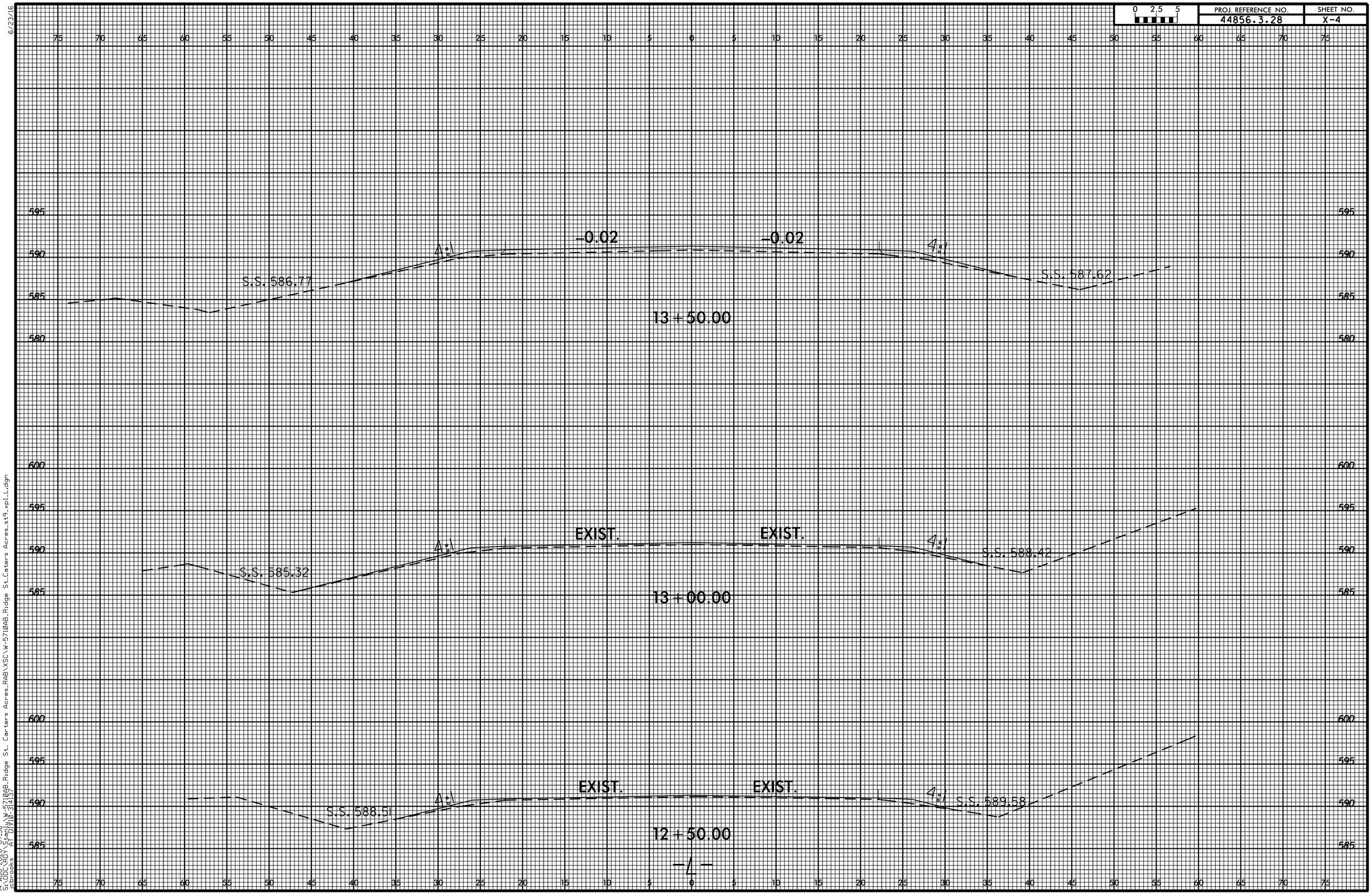

6/23/16

14-AUG-2020 07:36
S:\DDCYRDY\Stanly\W-5710AB_Ridge St. Carters Acres_RAB\XSC\W-5710AB_Ridge St_Caters Acres_st9_xpl_L.dgn
ebrooks AT DIV10-31413?

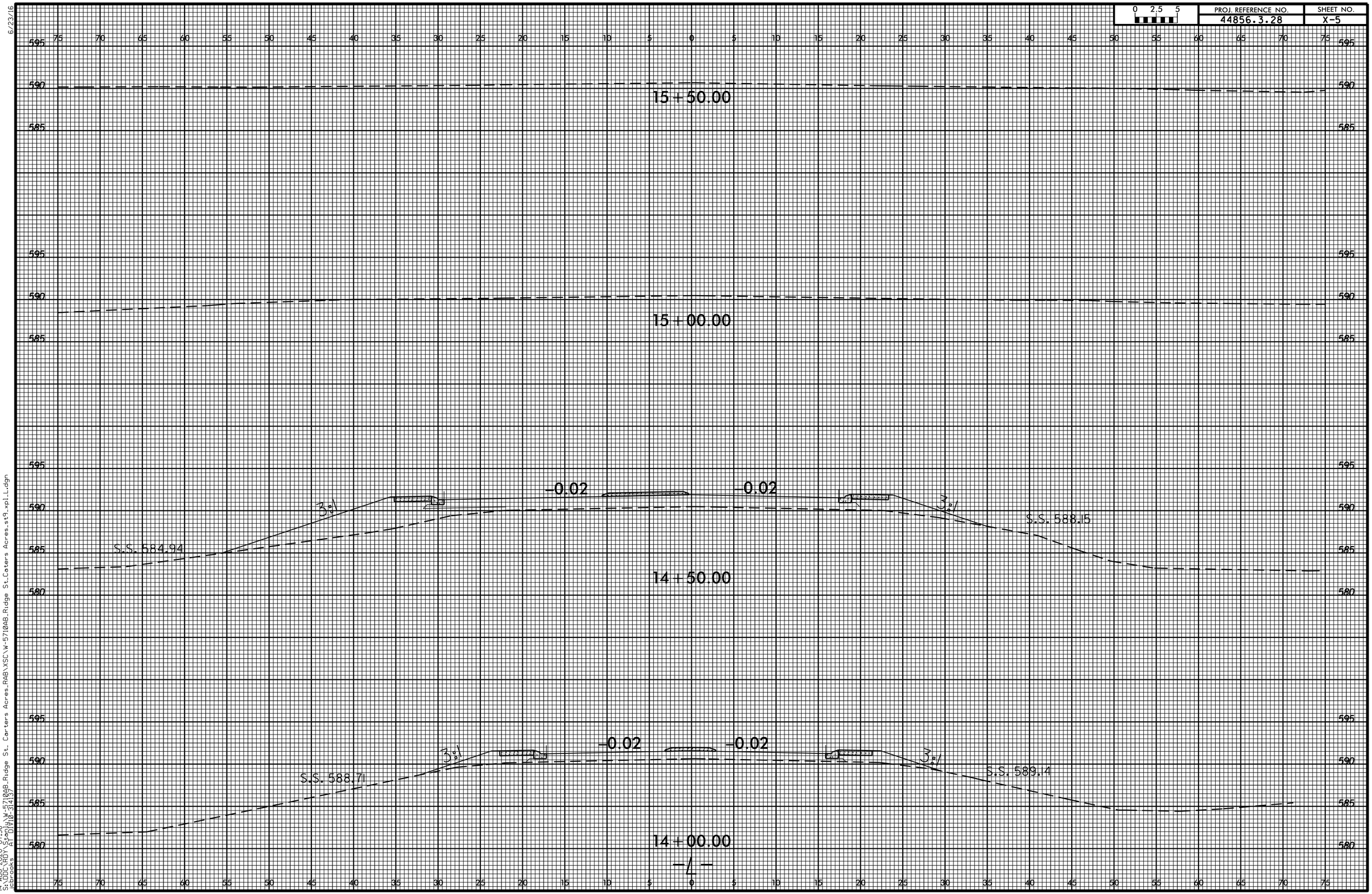

6/23/16

14-AUG-2020 07:36
S:\DDCVRDY\Stanly\W-5710AB_Ridge St. Carters Acres_RAB\XSC\W-5710AB_Ridge St_Caters Acres_st9_xpl_L.dgn
ebrooks AT DIV10-31413?

0 2.5 5	PROJ. REFERENCE NO.	SHEET NO.
	44856.3.28	X-6

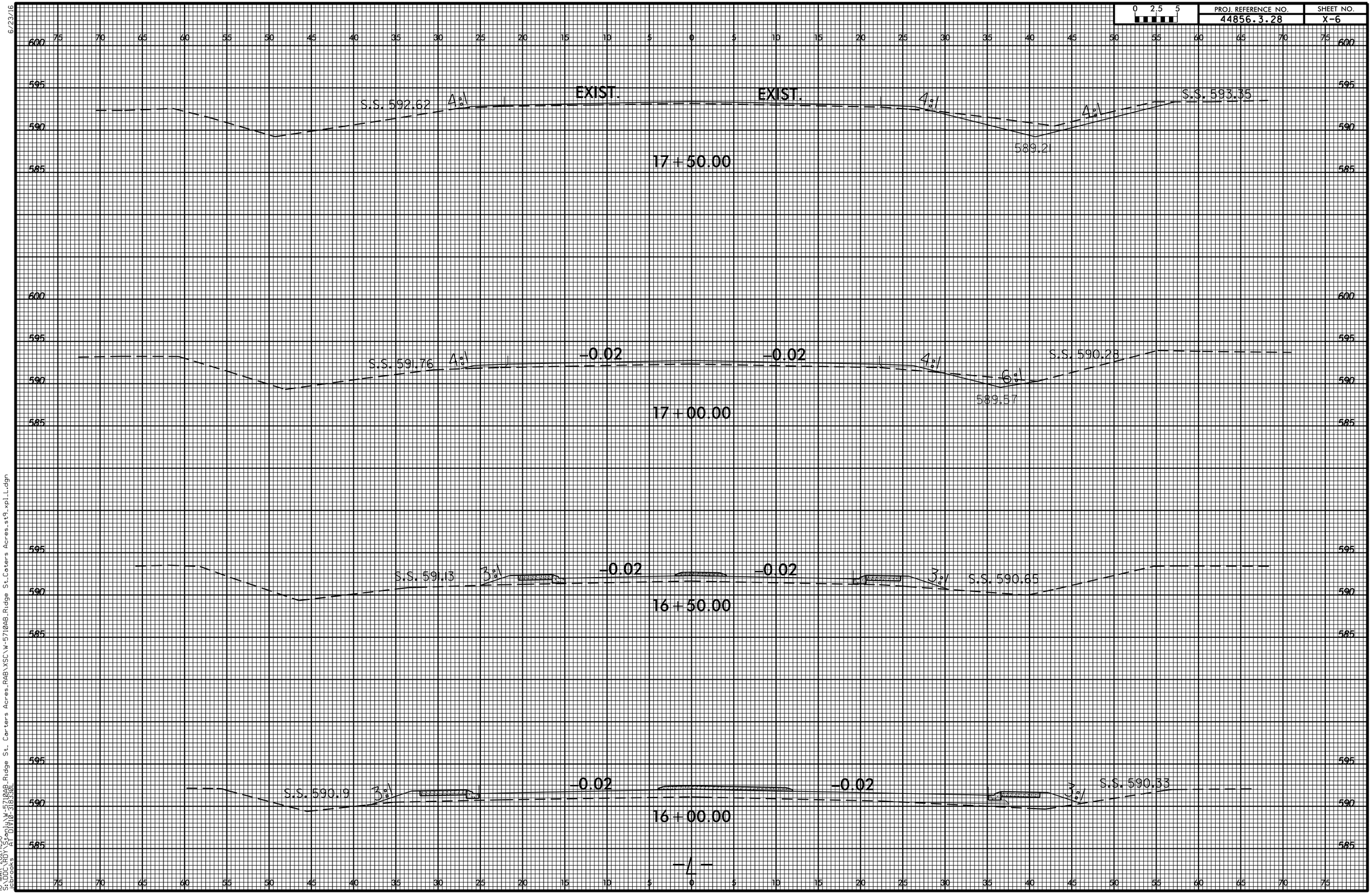

6/23/16

10-MAR-2021 11:50
S:\DDCVRDY\Stanly\W-5710AB_Ridge St. Carters Acres_RAB\XSC\W-5710AB_Ridge St_Caters Acres_st9_xpl_L.dgn
jebrooks AT DIV10-3183.30L

0 2.5 5	PROJ. REFERENCE NO.	SHEET NO.
	44856.3.28	X-7

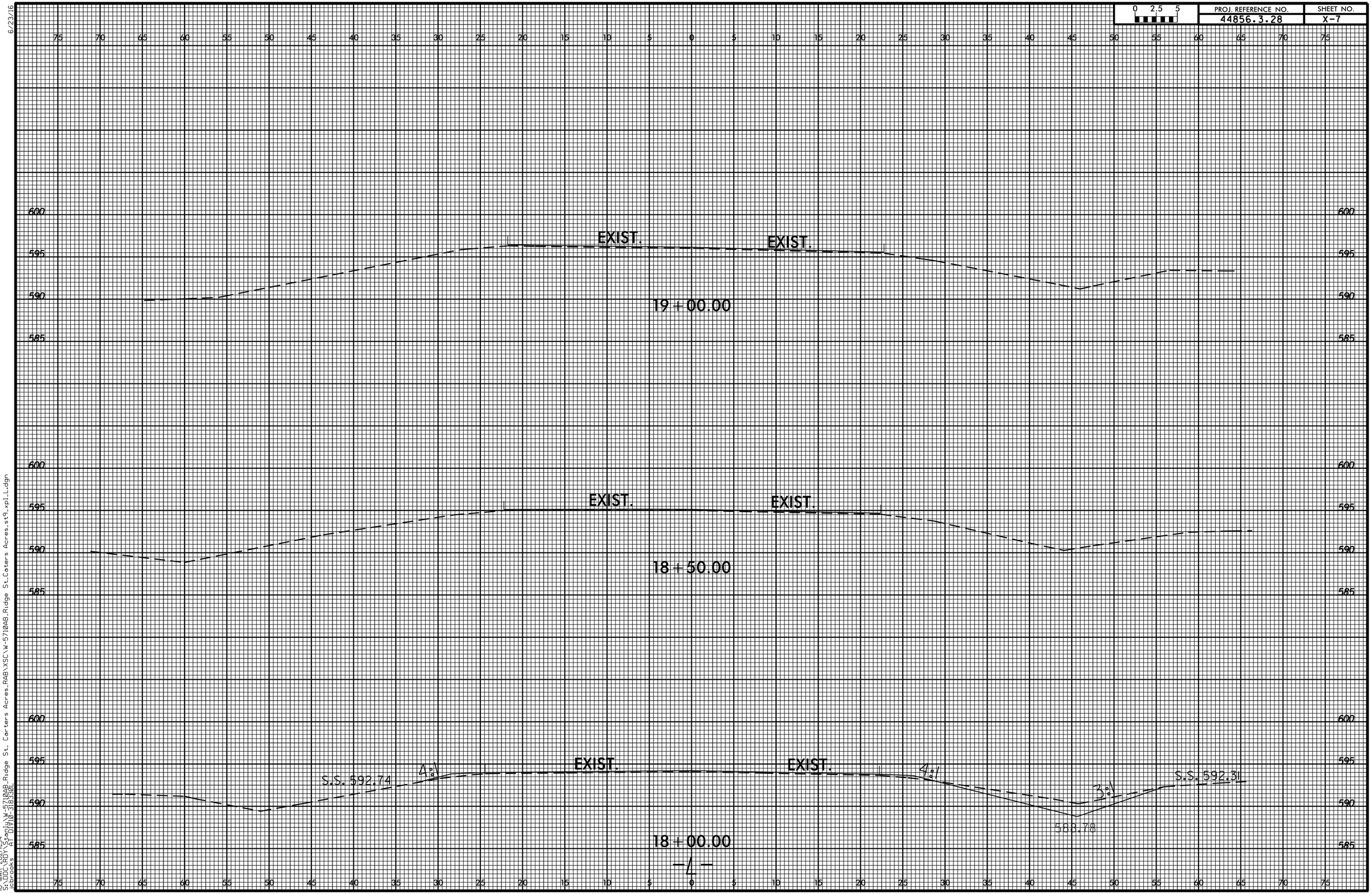

6/23/16

10-MAR-2021 11:54
S:\DDCVRDY\Stanly\W-5710AB_Ridge St. Carters Acres_RAB\XSC\W-5710AB_Ridge St_Caters Acres_st9_xpl_L.dgn
ebrooks AT DIV10-318330L

0 2.5 5	PROJ. REFERENCE NO.	SHEET NO.
	44856.3.28	X-8

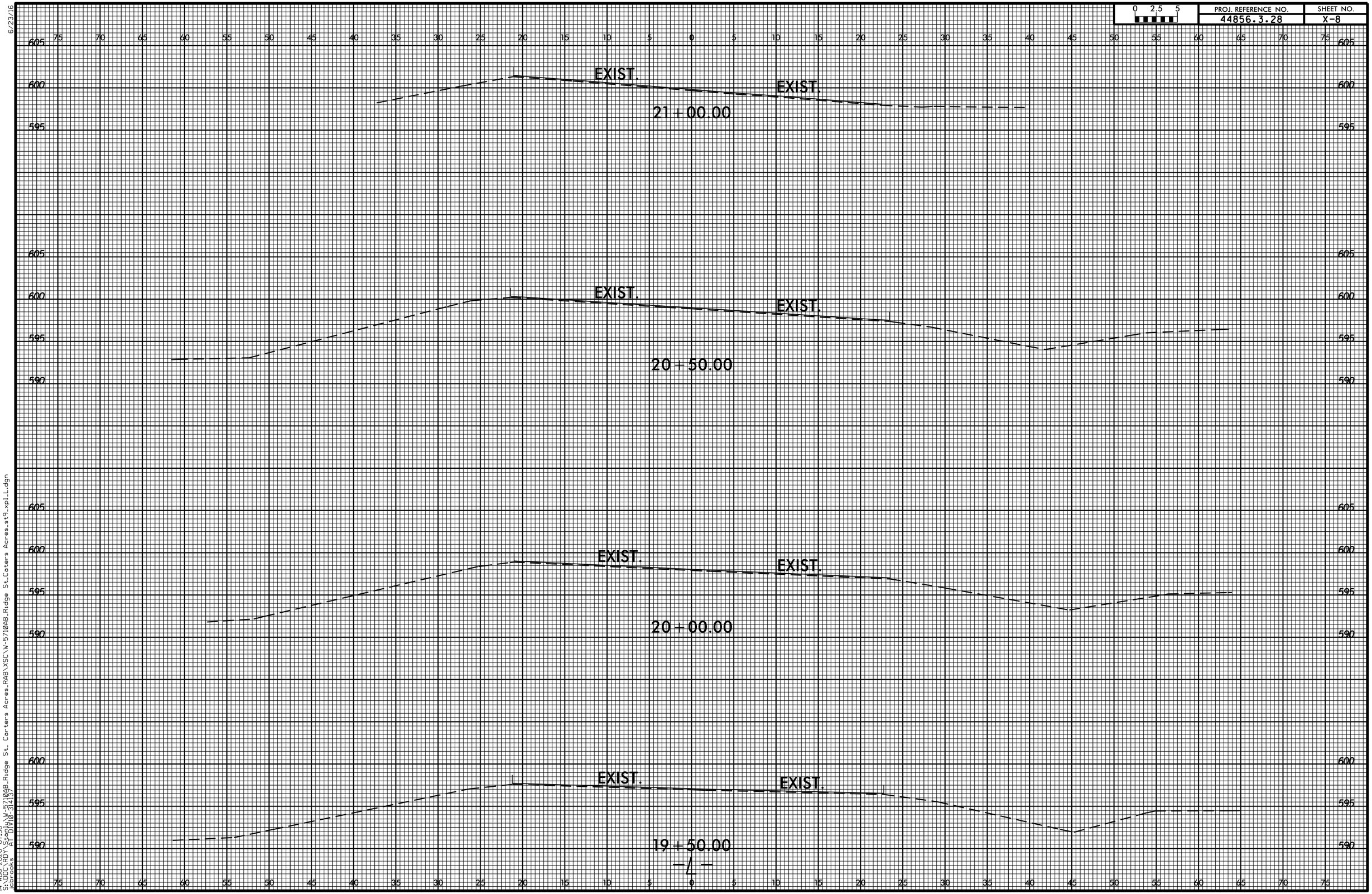

6/23/16

14-AUG-2020 07:38
S:\DDCYRDY\Stanly\W-5710AB_Ridge St. Carters Acres_RAB\XSC\W-5710AB_Ridge St_Caters Acres_st9_xpl_L.dgn
ebrooks AT DIV10-31413?

6/23/16

0 2.5 5	PROJ. REFERENCE NO.	SHEET NO.
	44856.3.28	X-9

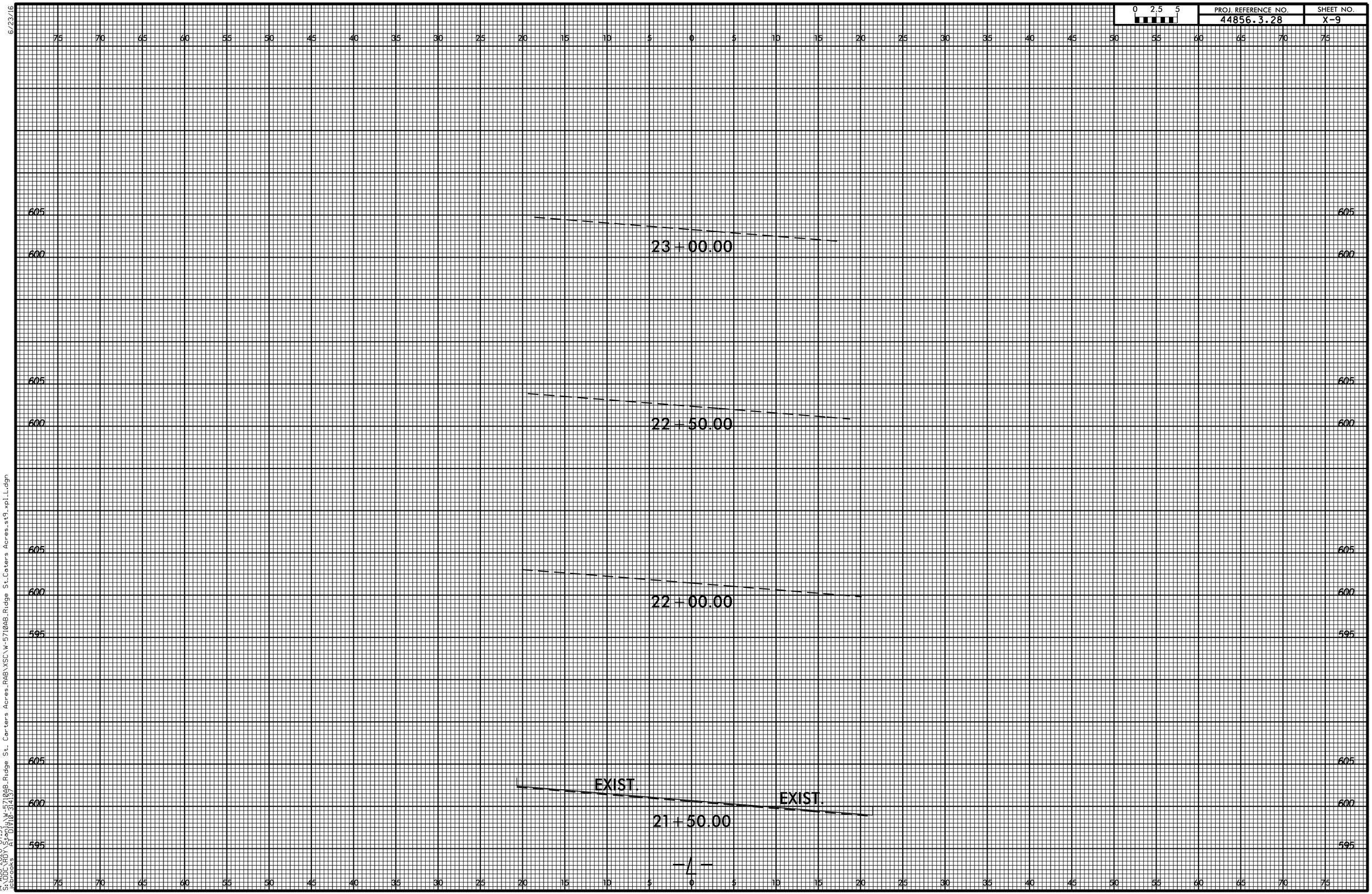

14-AUG-2020 07:39
S:\DDCYRDY\Stanly\W-5710AB_Ridge St. Carters Acres_RAB\XSC\W-5710AB_Ridge St_Caters Acres_st9_xpl_L.dgn
cebrooks AT DIV10-31413?

0 2.5 5	PROJ. REFERENCE NO.	SHEET NO.
	44856.3.28	X-10

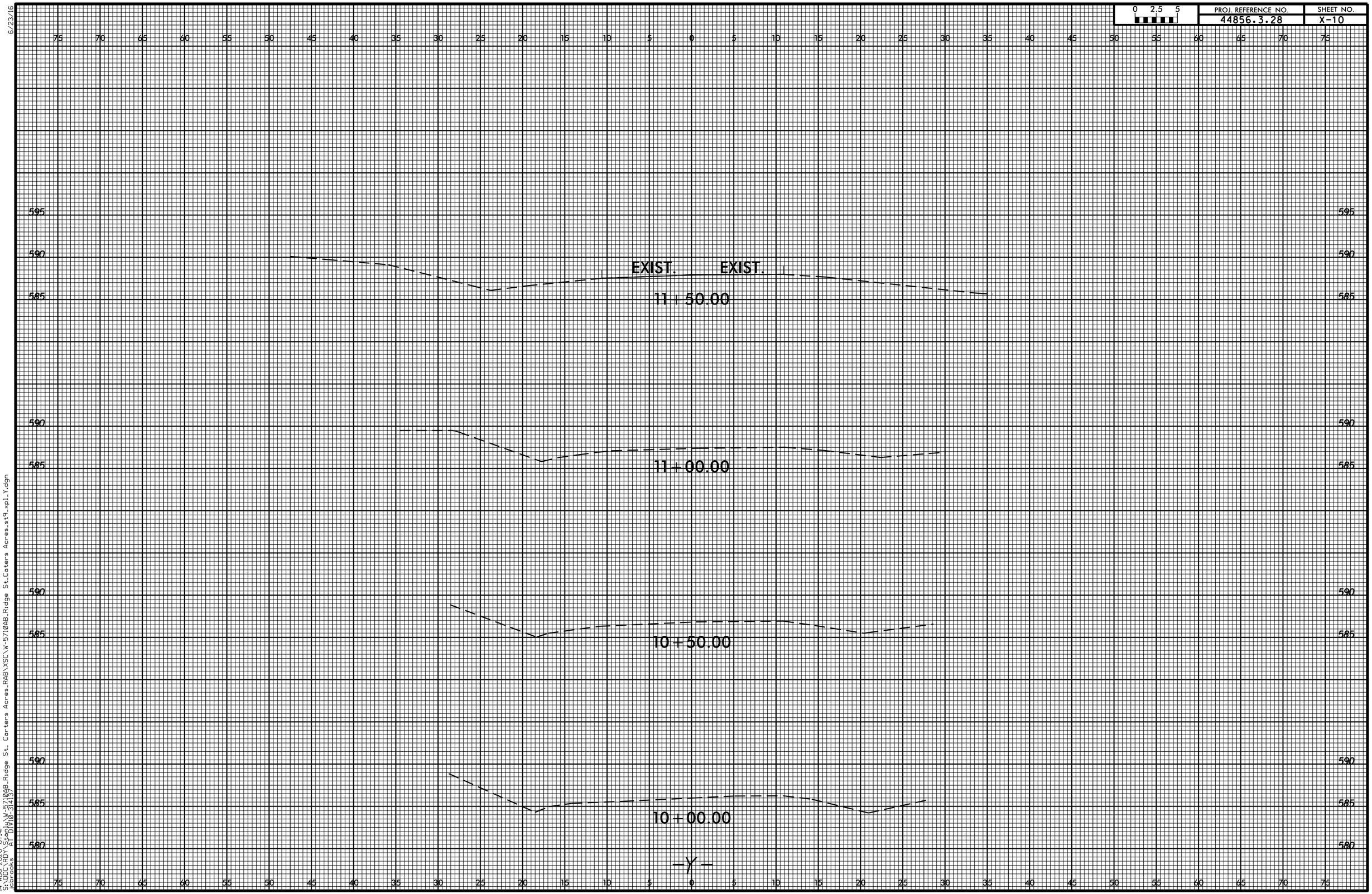

6/23/16

14-AUG-2020 07:41
S:\DDCVRDY\Stanly\W-5710AB_Ridge St. Carters Acres_RAB\XSC\W-5710AB_Ridge St_Caters Acres_st9_xpl_Y.dgn
ebrooks AT DIV10-31413?

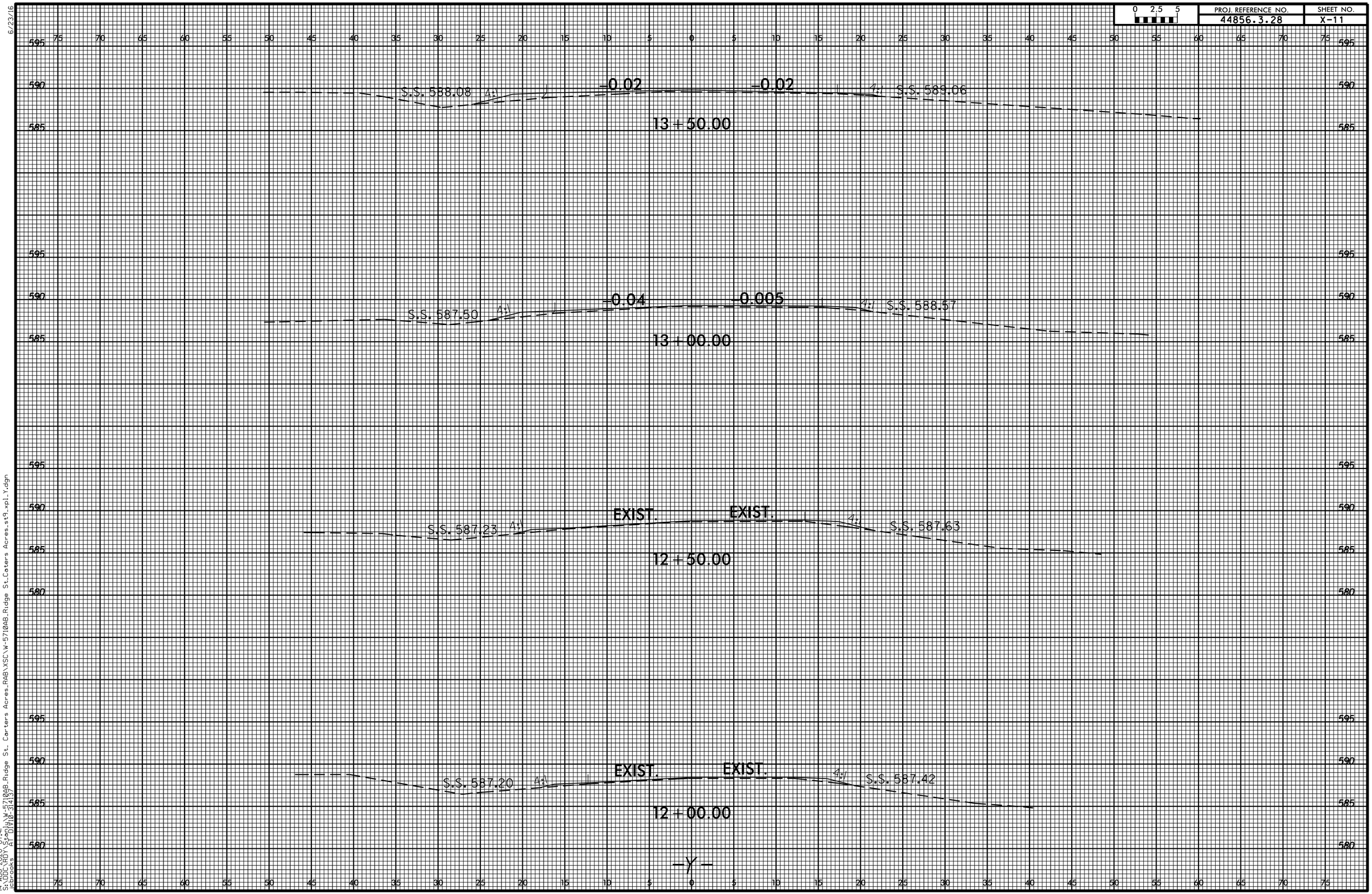

6/23/16

14-AUG-2020 07:41
S:\DDCVRDY\Stanly\W-5710AB_Ridge St. Carters Acres_RAB\XSC\W-5710AB_Ridge St_Caters Acres_st9_xpl_Y.dgn
ebrooks AT DIV10-31413?

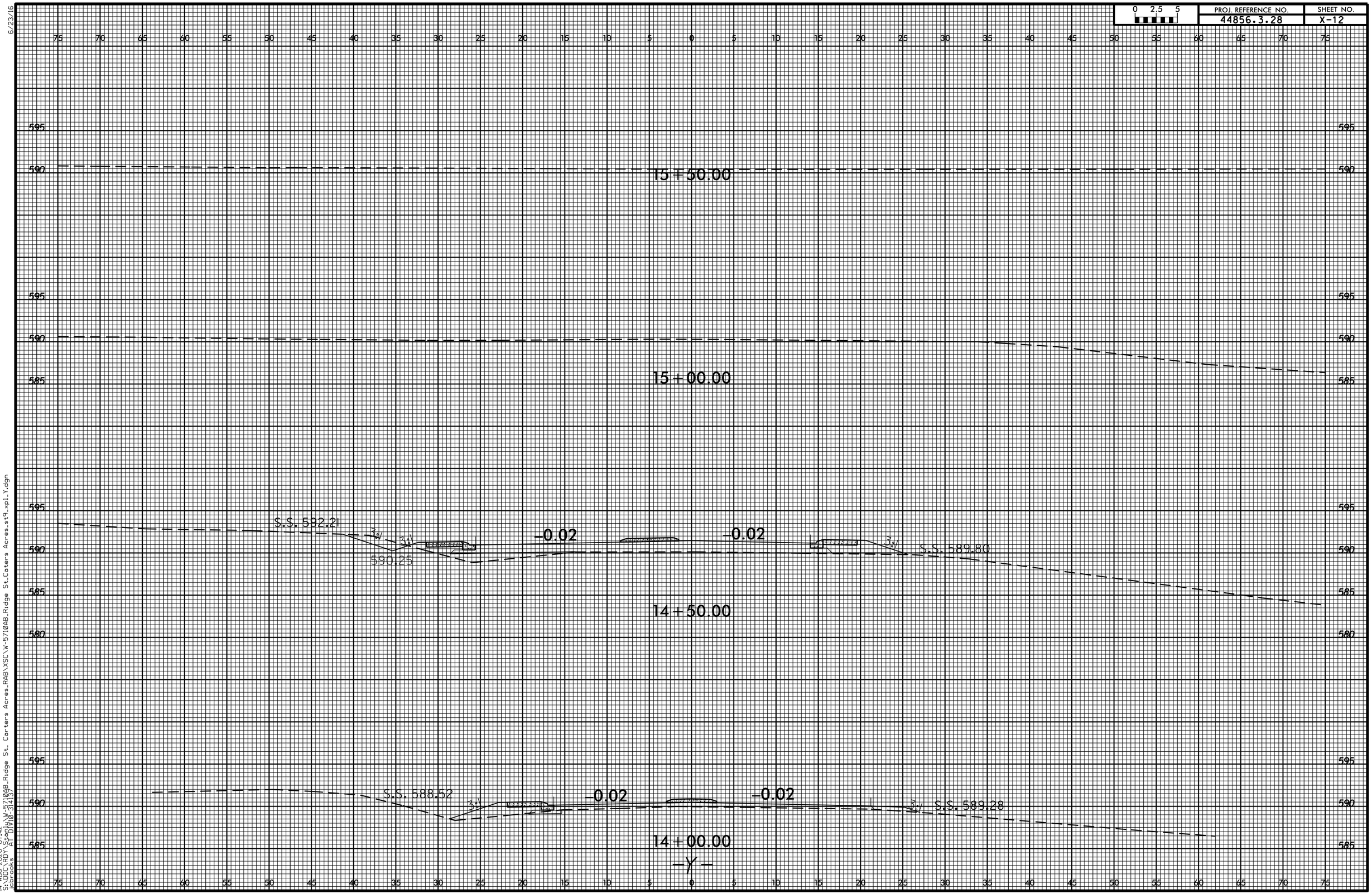
0 2.5 5
PROJ. REFERENCE NO.
44856.3.28
SHEET NO.
X-12
595
590
585
580
15+50.00
15+00.00
S.S. 592.21
3:1
2:1
590.25
-0.02
-0.02
3:1
S.S. 589.80
14+50.00
S.S. 588.52
3:1
-0.02
-0.02
3:1
S.S. 589.28
14+00.00
-Y-
6/23/16
14-AUG-2020 07:42
S:\DDCVRDY\Stanly\W-5710AB_Ridge St. Carters Acres_RAB\XSC\W-5710AB_Ridge St_Caters Acres_st9_xpl_Y.dgn
ebrooks AT DIV10-31413

0 2.5 5	PROJ. REFERENCE NO.	SHEET NO.
	44856.3.28	X-13

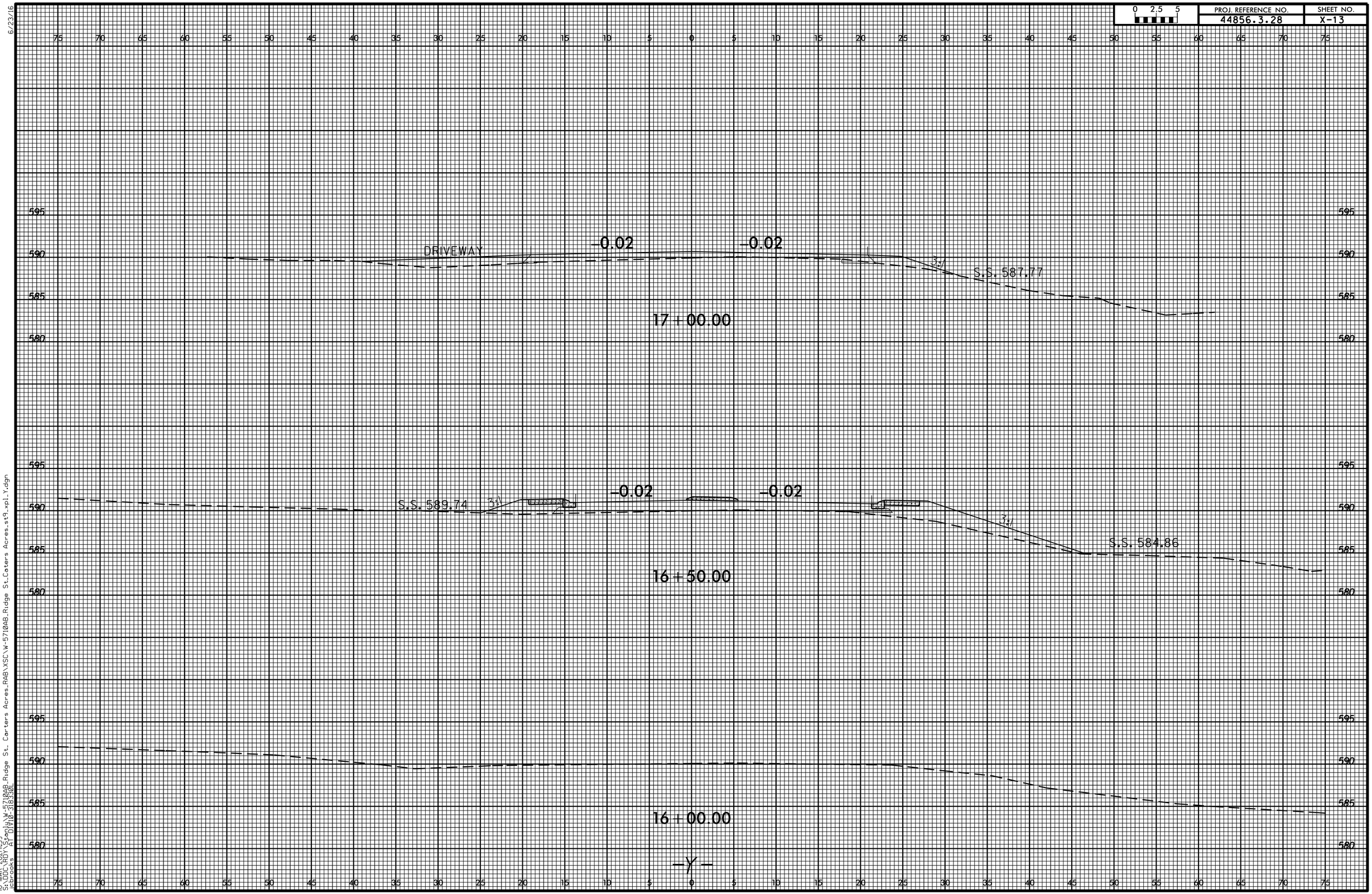

6/23/16

10-MAR-2021 11:59
S:\DDC\RDY\Stanly\W-5710AB_Ridge St. Carters Acres_RAB\XSC\W-5710AB_Ridge St_Caters Acres_st9_xpl_Y.dgn
ebrooks AT DIV10-318330L

0 2.5 5	PROJ. REFERENCE NO.	SHEET NO.
	44856.3.28	X-14

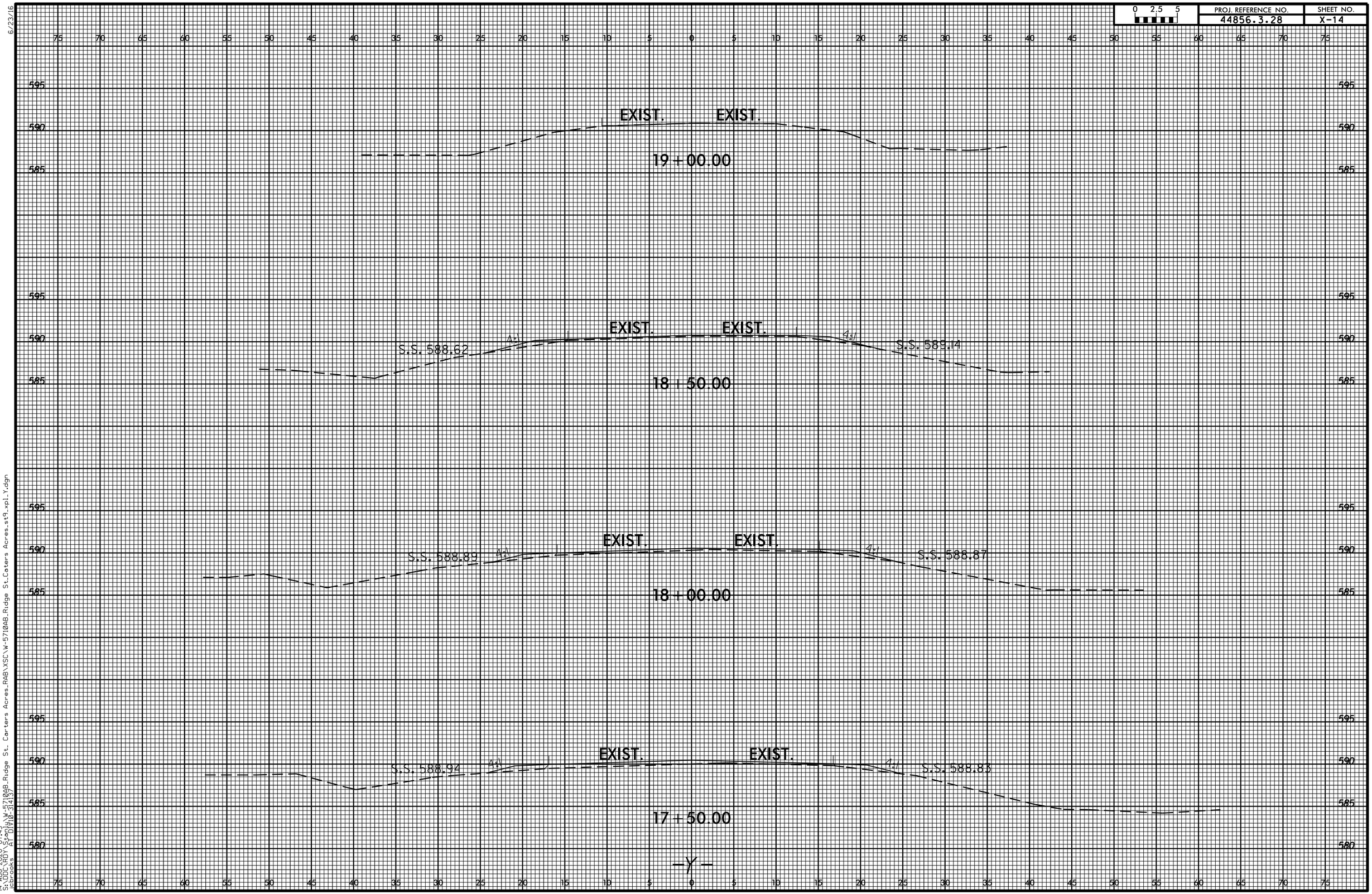

6/23/16

14-AUG-2020 07:43
S:\DDCVRDY\Stanly\W-5710AB_Ridge St. Carters Acres_RAB\XSC\W-5710AB_Ridge St_Caters Acres_st9_xpl_Y.dgn
ebrooks AT DIV10-31413?

0 2.5 5	PROJ. REFERENCE NO.	SHEET NO.
	44856.3.28	X-15

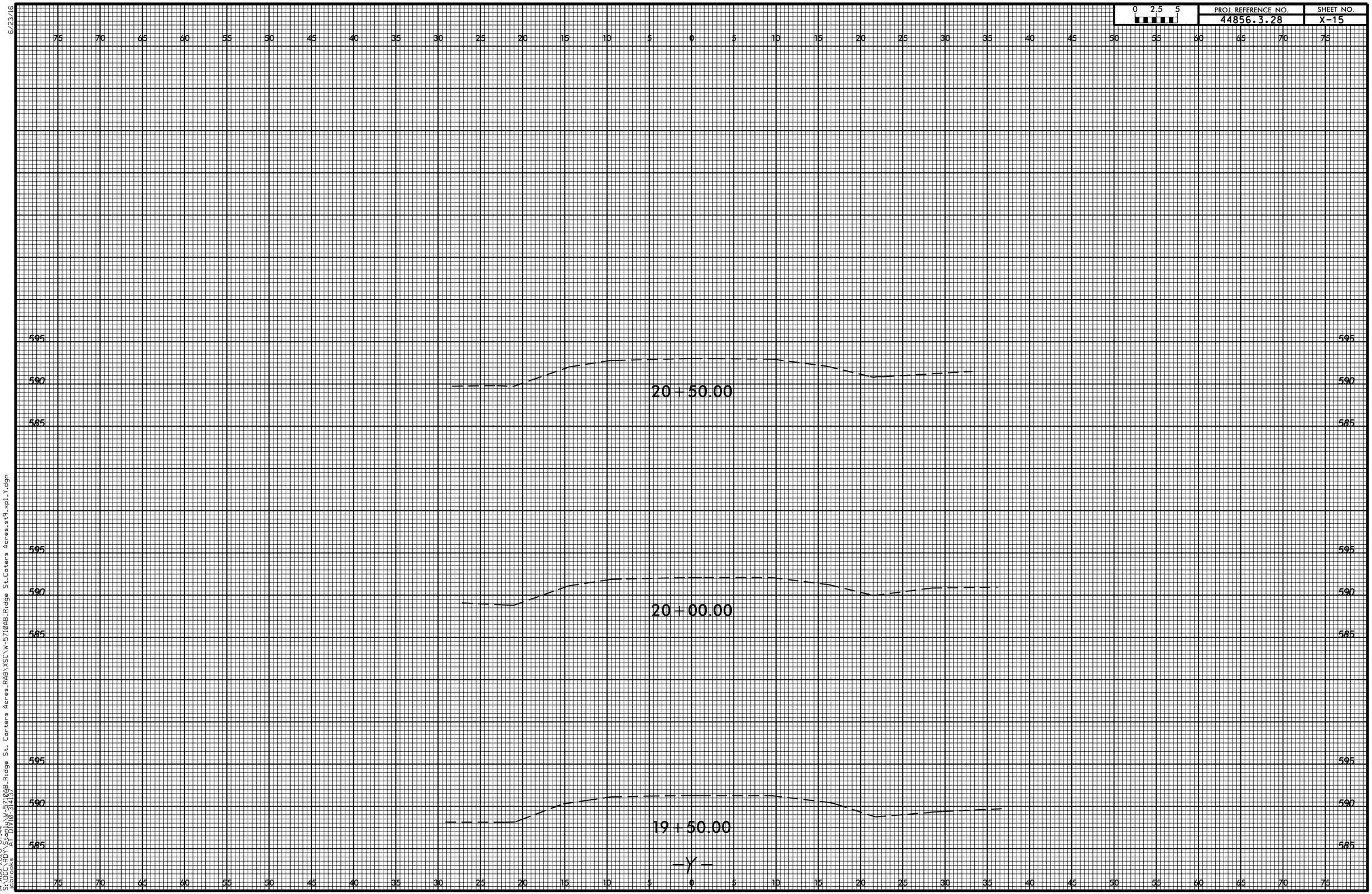

6/23/16

14-AUG-2020 07:44
S:\DDCYRDY\Stanly\W-5710AB_Ridge St. Carters Acres_RAB\XSC\W-5710AB_Ridge St_Caters Acres_st9_xpl_Y.dgn
ebrooks AT DIV10-31413?