This electronic collection of documents is provided for the convenience of the user and is Not a Certified Document –

The documents contained herein were originally issued and sealed by the individuals whose names and license numbers appear on each page, on the dates appearing with their signature on that page.
This file or an individual page shall not be considered a certified document.

DocuSign Envelope ID: 82C101FB-6C86-4756-A119-298F2291D0A8

09/08/99

TIP PROJECT: U-5115

CONTRACT: DJ00247

See Sheet 1-A For Index of Sheets

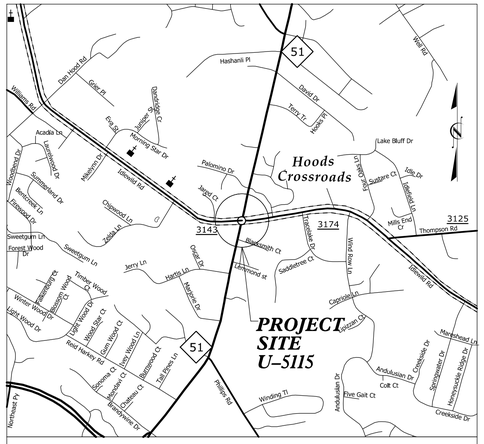

VICINITY MAP

STATE	STATE PROJECT REFERENCE NO.	SHEET NO.	TOTAL SHEETS
N.C.	U-5115	1	23

STATE PROJ. NO.	F.A. PROJ. NO.	DESCRIPTION
42377.1	STPDA-1013(4)	PE
42377.2	STPDA-1013(4)	R/W
42377.3		CONST.

STATE OF NORTH CAROLINA
DIVISION OF HIGHWAYS

MECKLENBURG COUNTY

LOCATION: INTERSECTION OF MATTHEWS-MINT HILL RD (NC 51) AND IDLEWILD ROAD (SR 3143 & SR 3174)

TYPE OF WORK: GRADING, DRAINAGE, MILLING, EROSION CONTROL, PAVING, MONOLITHIC ISLAND, CURB AND GUTTER, PAVEMENT MARKINGS AND SIGNING

4

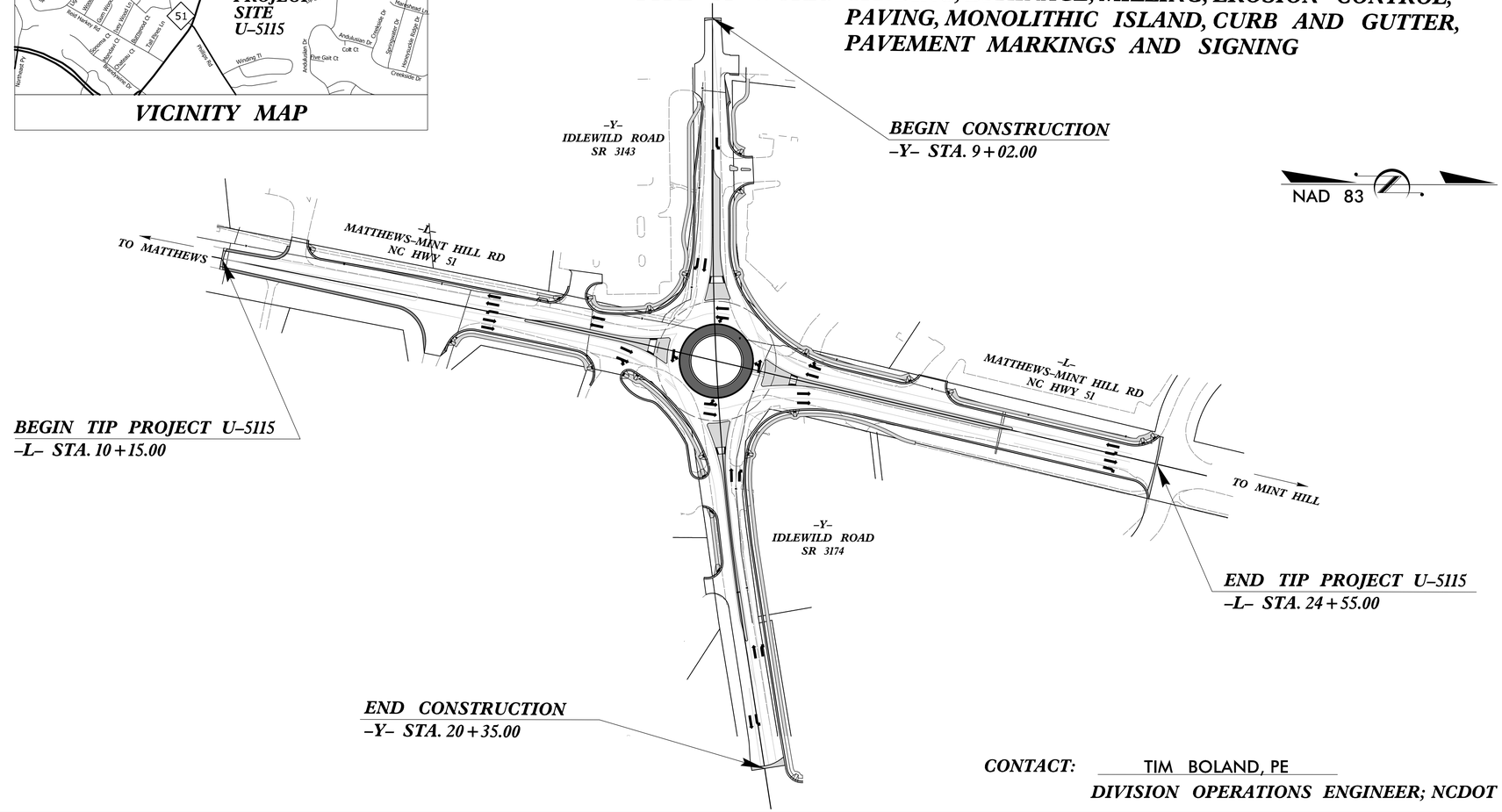

CONTACT: TIM BOLAND, PE
DIVISION OPERATIONS ENGINEER; NCDOT – DIVISION 10

GRAPHIC SCALES

50 25 0 50 100
PLANS

50 25 0 50 100
PROFILE (HORIZONTAL)

10 5 0 10 20
PROFILE (VERTICAL)

DESIGN DATA

ADT 2010 = 18,000
ADT 2020 = 20,000
DHV = NA %
D = NA %
T = NA % *
V = 50 MPH
* TTST = NA DUAL NA
FUNC CLASS =
URBAN ARTERIAL
REGIONAL TIER

PROJECT LENGTH

LENGTH OF ROADWAY TIP PROJECT U-5115 = 0.487 MILES
TOTAL LENGTH TIP PROJECT U-5115 = 0.487 MILES

PREPARED IN THE OFFICE OF:
WSP | PARSONS BRINCKERHOFF
434 Fayetteville Street, Suite 1500 Raleigh, NC 27601
Tel. (919) 836-4040 www.wsp-pb.com
License No. F-0891
FOR THE NORTH CAROLINA DEPARTMENT OF TRANSPORTATION
2012 STANDARD SPECIFICATIONS

RIGHT OF WAY DATE: 06-16-2015
LETTING DATE: 06-07-2017

RONYELL THIGPEN, PE
PROJECT ENGINEER

HOLLY CHRISTENBURY, PE
PROJECT DESIGN ENGINEER

HYDRAULICS ENGINEER
DocuSigned by: Rana Stansell
6DFE36A0A5B4BC...
SIGNATURE:
NORTH CAROLINA PROFESSIONAL SEAL 27876 5/30/2017 ENGINEER RANA STANSELL
P.E.

ROADWAY DESIGN ENGINEER
DocuSigned by: Ronyell Thigpen
57051A863B324EF...
SIGNATURE:
NORTH CAROLINA PROFESSIONAL SEAL 33290 5/30/2017 ENGINEER RONYELL A. THIGPEN
P.E.

STATE OF NORTH CAROLINA DEPARTMENT OF TRANSPORTATION

5/30/2017
R:\Roadway\Proj\U5115_RDY_TSH.dgn
USHC04407

DocuSign Envelope ID: D7A5630C-E418-44A2-BFB9-50322DAD3730

8/17/99

WSP | PARSONS BRINCKERHOFF
434 Fayetteville Street Suite 1500
Raleigh, NC 27601 - 919.836.4040
www.wspgroup.com
LICENSE NO. F-0891

PROJECT REFERENCE NO.	SHEET NO.
U-5115	1-A

ROADWAY DESIGN ENGINEER

NORTH CAROLINA PROFESSIONAL SEAL 33290 ENGINEER ROWELL A. TWIGGER

DocuSigned by: Rowell A. Twigger 4/27/2017
57051A06BB924EF...

INDEX OF SHEETS

SHEET NUMBER	SHEET
1	TITLE SHEET
1–A	INDEX OF SHEETS, GENERAL NOTES, AND LIST OF STANDARD DRAWINGS
1–B	CONVENTIONAL SYMBOLS
1–C	SURVEY CONTROL SHEET
2 THRU 2–A	PAVEMENT SCHEDULE, TYPICAL SECTIONS, AND WEDGING DETAILS
2–B	ROUNDABOUT DETAIL SHEET
2–C	HORIZONTAL LAYOUT SHEET
2–D	PAVEMENT REMOVAL LAYOUT SHEET
3–A1 THRU 3–A2	DRAINAGE SUMMARY
3–B	MISCELLANEOUS SUMMARIES (EARTHWORK, PAVEMENT REMOVAL, RIGHT–OF–WAY, & CURB AND GUTTER)
3–C	OFFSET CATCH BASIN WITH MANHOLE DETAIL
4	PLAN SHEET
5	PROFILE SHEET
PMP–1 THRU PMP–2, SIGN–1	PAVEMENT MARKING PLANS
EC–1 THRU EC–5	EROSION CONTROL PLANS
X–1 THRU X–4	CROSS–SECTIONS

GENERAL NOTES: 2012 SPECIFICATIONS

EFFECTIVE: 01–17–12
REVISED: 11/01/11

GRADING AND SURFACING OR RESURFACING AND WIDENING:

THE GRADE LINES SHOWN DENOTE THE FINISHED ELEVATION OF THE PROPOSED SURFACING AT GRADE POINTS SHOWN ON THE TYPICAL SECTIONS. WHERE NO GRADE LINES ARE SHOWN, THE PROFILES SHOWN DENOTE THE TOP ELEVATION OF THE EXISTING PAVEMENT ALONG THE CENTER LINE OF SURVEY ON WHICH THE PROPOSED RESURFACING WILL BE PLACED. GRADE LINES MAY BE ADJUSTED BY THE ENGINEER IN ORDER TO SECURE A PROPER TIE–IN.

CLEARING:

CLEARING ON THIS PROJECT SHALL BE PERFORMED TO THE LIMITS ESTABLISHED BY METHOD II.

SUPERELEVATION:

ALL CURVES ON THIS PROJECT SHALL BE SUPERELEVATED IN ACCORDANCE WITH STD. NO. 225.04 USING THE RATE OF SUPERELEVATION AND RUNOFF SHOWN ON THE PLANS. SUPERELEVATION IS TO BE REVOLVED ABOUT THE GRADE POINTS SHOWN ON THE TYPICAL SECTIONS.

SHOULDER CONSTRUCTION:

ASPHALT, EARTH, AND CONCRETE SHOULDER CONSTRUCTION ON THE HIGH SIDE OF SUPERELEVATED CURVES SHALL BE IN ACCORDANCE WITH STD. NO. 560.01.

SIDE ROADS:

THE CONTRACTOR WILL BE REQUIRED TO DO ALL NECESSARY WORK TO PROVIDE SUITABLE CONNECTIONS WITH ALL ROADS, STREETS, AND DRIVES ENTERING THIS PROJECT. THIS WORK WILL BE PAID FOR AT THE CONTRACT UNIT PRICE FOR THE PARTICULAR ITEMS INVOLVED.

DRIVEWAYS:

DRIVEWAYS SHALL BE CONSTRUCTED IN ACCORDANCE WITH STD. 848.02 USING 3' RADII OR RADII AS SHOWN ON THE PLANS. LOCATIONS OF DRIVES WILL BE AS SHOWN ON THE PLANS OR AS DIRECTED BY THE ENGINEER.

STREET TURNOUT:

STREET RETURNS SHALL BE CONSTRUCTED IN ACCORDANCE WITH STD. NO. 848.04 USING THE RADII NOTED ON PLANS.

TEMPORARY SHORING:

SHORING REQUIRED FOR THE MAINTENANCE OF TRAFFIC NOT SHOWN ON THE PLANS WILL BE PAID FOR AT THE CONTRACT PRICE FOR "TEMPORARY SHORING".

SUBSURFACE PLANS:

NO SUBSURFACE PLANS ARE AVAILABLE ON THIS PROJECT. THE CONTRACTOR SHOULD MAKE HIS OWN INVESTIGATION AS TO THE SUBSURFACE CONDITIONS.

UTILITIES:

UTILITY OWNERS ON THIS PROJECT ARE

UTILITY	OWNER
POWER	DUKE ENERGY
TELEPHONE	WINDSTREAM
WATER	CITY OF CHARLOTTE
CABLE	TIME WARNER CABLE
GAS	PIEDMONT NATURAL GAS
SEWER	CITY OF CHARLOTTE

ANY RELOCATION OF EXISTING UTILITIES WILL BE ACCOMPLISHED BY OTHERS.

RIGHT–OF–WAY MARKERS:

ALL RIGHT–OF–WAY MARKERS ON THIS PROJECT SHALL BE PLACED BY CONTRACT.

CURB RAMPS

CURB RAMPS ARE SHOWN ON THE PLANS AT APPROXIMATE LOCATIONS. CONSTRUCT ALL CURB RAMPS ACCORDANCE WITH STD 848.05 and/or 848.06.

2012 ROADWAY ENGLISH STANDARD DRAWINGS

The following Roadway Standards as appear in "Roadway Standard Drawings" Highway Design Branch – N. C. Department of Transportation – Raleigh, N. C., Dated January, 2012 are applicable to this project and by reference hereby are considered a part of these plans:

STD.NO.	TITLE
DIVISION 2 – EARTHWORK	
200.02	Method of Clearing – Method II
225.02	Guide for Grading Subgrade – Secondary and Local
225.04	Method of Obtaining Superelevation – Two Lane Pavement
225.06	Method of Grading Sight Distance at Intersections
DIVISION 3 – PIPE CULVERTS	
300.01	Method of Pipe Installation
DIVISION 5 – SUBGRADE, BASES AND SHOULDERS	
560.01	Method of Shoulder Construction – High Side of Superelevated Curve – Method I
DIVISION 6 – ASPHALT BASES AND PAVEMENTS	
654.01	Pavement Repairs
DIVISION 8 – INCIDENTALS	
840.01	Brick Catch Basin – 12" thru 54" Pipe
840.02	Concrete Catch Basin – 12" thru 54" Pipe
840.03	Frame, Grates and Hood – for Use on Standard Catch Basin
840.14	Concrete Drop Inlet – 12" thru 30" Pipe
840.15	Brick Drop Inlet – 12" thru 30" Pipe
840.18	Concrete Grated Drop Inlet Type 'B' – 12" thru 36" Pipe
840.27	Brick Grated Drop Inlet Type 'B' – 12" thru 36" Pipe
840.29	Frames and Narrow Slot Flat Grates
840.51	Brick Manhole – 12" thru 36" Pipe
840.52	Precast Manhole – 4', 5' and 6' Diameter
840.53	Precast Manhole with Masonry Base – 12" thru 42" Pipe
846.01	Concrete Curb, Gutter and Curb & Gutter
848.01	Concrete Sidewalk
848.02	Driveway Turnout – Radius Type
848.03	Driveway Turnout – Drop Curb Type
848.04	Street Turnout
848.05	Curb Ramp – Proposed Curb & Gutter
852.01	Concrete Islands
852.06	Method for Placement of Drop Inlets in Concrete Islands
876.01	Rip Rap in Channels
876.02	Guide for Rip Rap at Pipe Outlets
876.04	Drainage Ditches with Class 'B' Rip Rap

4/26/2017
R:\Roadway\Proj\U5115_RDY_TSH_01a.dgn
USER:024497

DocuSign Envelope ID: D7A5630C-E418-44A2-BFB9-50322DAD3730

PROJECT REFERENCE NO.	SHEET NO.
U-5115	1-B

Note: Not to Scale

****S.U.E. = Subsurface Utility Engineering***

STATE OF NORTH CAROLINA
DIVISION OF HIGHWAYS

CONVENTIONAL PLAN SHEET SYMBOLS

BOUNDARIES AND PROPERTY:

- State Line
- County Line
- Township Line
- City Line
- Reservation Line
- Property Line
- Existing Iron Pin — EIP
- Property Corner
- Property Monument — ECM
- Parcel/Sequence Number — 123
- Existing Fence Line
- Proposed Woven Wire Fence
- Proposed Chain Link Fence
- Proposed Barbed Wire Fence
- Existing Wetland Boundary — WLB
- Proposed Wetland Boundary — WLB
- Existing Endangered Animal Boundary — EAB
- Existing Endangered Plant Boundary — EPB
- Known Soil Contamination: Area or Site
- Potential Soil Contamination: Area or Site

BUILDINGS AND OTHER CULTURE:

- Gas Pump Vent or U/G Tank Cap
- Sign — S
- Well — W
- Small Mine
- Foundation
- Area Outline
- Cemetery
- Building
- School
- Church
- Dam

HYDROLOGY:

- Stream or Body of Water
- Hydro, Pool or Reservoir
- Jurisdictional Stream — JS
- Buffer Zone 1 — BZ 1
- Buffer Zone 2 — BZ 2
- Flow Arrow
- Disappearing Stream
- Spring
- Wetland
- Proposed Lateral, Tail, Head Ditch — FLOW
- False Sump

RAILROADS:

- Standard Gauge — CSX TRANSPORTATION
- RR Signal Milepost — MILEPOST 35
- Switch — SWITCH
- RR Abandoned
- RR Dismantled

RIGHT OF WAY:

- Baseline Control Point
- Existing Right of Way Marker
- Existing Right of Way Line
- Proposed Right of Way Line — RW
- Proposed Right of Way Line with Iron Pin and Cap Marker — RW
- Proposed Right of Way Line with Concrete or Granite R/W Marker — RW
- Proposed Control of Access Line with Concrete C/A Marker — CA
- Existing Control of Access — CA
- Proposed Control of Access — CA
- Existing Easement Line — E
- Proposed Temporary Construction Easement — E
- Proposed Temporary Drainage Easement — TDE
- Proposed Permanent Drainage Easement — PDE
- Proposed Permanent Drainage / Utility Easement — DUE
- Proposed Permanent Utility Easement — PUE
- Proposed Temporary Utility Easement — TUE
- Proposed Aerial Utility Easement — AUE
- Proposed Permanent Easement with Iron Pin and Cap Marker

ROADS AND RELATED FEATURES:

- Existing Edge of Pavement
- Existing Curb
- Proposed Slope Stakes Cut — C
- Proposed Slope Stakes Fill — F
- Proposed Curb Ramp — CR
- Existing Metal Guardrail
- Proposed Guardrail
- Existing Cable Guiderail
- Proposed Cable Guiderail
- Equality Symbol
- Pavement Removal

VEGETATION:

- Single Tree
- Single Shrub
- Hedge
- Woods Line
- Orchard
- Vineyard — Vineyard

EXISTING STRUCTURES:

MAJOR:

- Bridge, Tunnel or Box Culvert — CONC
- Bridge Wing Wall, Head Wall and End Wall — CONC WW

MINOR:

- Head and End Wall — CONC HW
- Pipe Culvert
- Footbridge
- Drainage Box: Catch Basin, DI or JB — CB
- Paved Ditch Gutter
- Storm Sewer Manhole — S
- Storm Sewer — S

UTILITIES:

POWER:

- Existing Power Pole
- Proposed Power Pole
- Existing Joint Use Pole
- Proposed Joint Use Pole
- Power Manhole — P
- Power Line Tower
- Power Transformer
- U/G Power Cable Hand Hole
- H-Frame Pole
- Recorded U/G Power Line — P
- Designated U/G Power Line (S.U.E.*) — P

TELEPHONE:

- Existing Telephone Pole
- Proposed Telephone Pole
- Telephone Manhole — T
- Telephone Booth
- Telephone Pedestal — T
- Telephone Cell Tower
- U/G Telephone Cable Hand Hole — HH
- Recorded U/G Telephone Cable — T
- Designated U/G Telephone Cable (S.U.E.*) — T
- Recorded U/G Telephone Conduit — TC
- Designated U/G Telephone Conduit (S.U.E.*) — TC
- Recorded U/G Fiber Optics Cable — T FO
- Designated U/G Fiber Optics Cable (S.U.E.*) — T FO

WATER:

- Water Manhole — W
- Water Meter
- Water Valve
- Water Hydrant
- Recorded U/G Water Line
- Designated U/G Water Line (S.U.E.*)
- Above Ground Water Line — A/G Water

TV:

- TV Satellite Dish
- TV Pedestal — C
- TV Tower
- U/G TV Cable Hand Hole — HH
- Recorded U/G TV Cable — TV
- Designated U/G TV Cable (S.U.E.*) — TV
- Recorded U/G Fiber Optic Cable — TV FO
- Designated U/G Fiber Optic Cable (S.U.E.*) — TV FO

GAS:

- Gas Valve
- Gas Meter
- Recorded U/G Gas Line — G
- Designated U/G Gas Line (S.U.E.*) — G
- Above Ground Gas Line — A/G Gas

SANITARY SEWER:

- Sanitary Sewer Manhole
- Sanitary Sewer Cleanout
- U/G Sanitary Sewer Line — SS
- Above Ground Sanitary Sewer — A/G Sanitary Sewer
- Recorded SS Forced Main Line — FSS
- Designated SS Forced Main Line (S.U.E.*) — FSS

MISCELLANEOUS:

- Utility Pole
- Utility Pole with Base
- Utility Located Object
- Utility Traffic Signal Box — S
- Utility Unknown U/G Line — ?UTL
- U/G Tank; Water, Gas, Oil
- Underground Storage Tank, Approx. Loc. — UST
- A/G Tank; Water, Gas, Oil
- Geoenvironmental Boring
- U/G Test Hole (S.U.E.*)
- Abandoned According to Utility Records — AATUR
- End of Information — E.O.I.

DocuSign Envelope ID: D7A5630C-E418-44A2-BFB9-50322DAD3730

PROJECT REFERENCE NO.	SHEET NO.
U-5115	1-C

SURVEY CONTROL SHEET U-5115

BL POINT	DESC.	NORTH	EAST	ELEVATION	L STATION	L OFFSET
200	BL-1	509,281.51	1,496,875.34	785.31	18+51.48	70.90 RIGHT
201	BL-2	510,085.92	1,496,941.99	775.40	OUTSIDE LIMITS	OUTSIDE LIMITS
202	BL-3	508,987.87	1,496,810.99	783.66	15+49.28	72.48 RIGHT

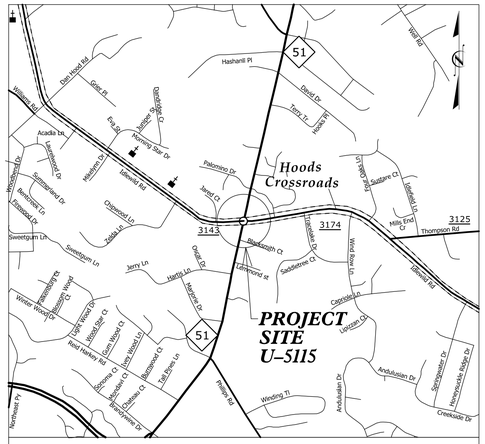

VICINITY MAP

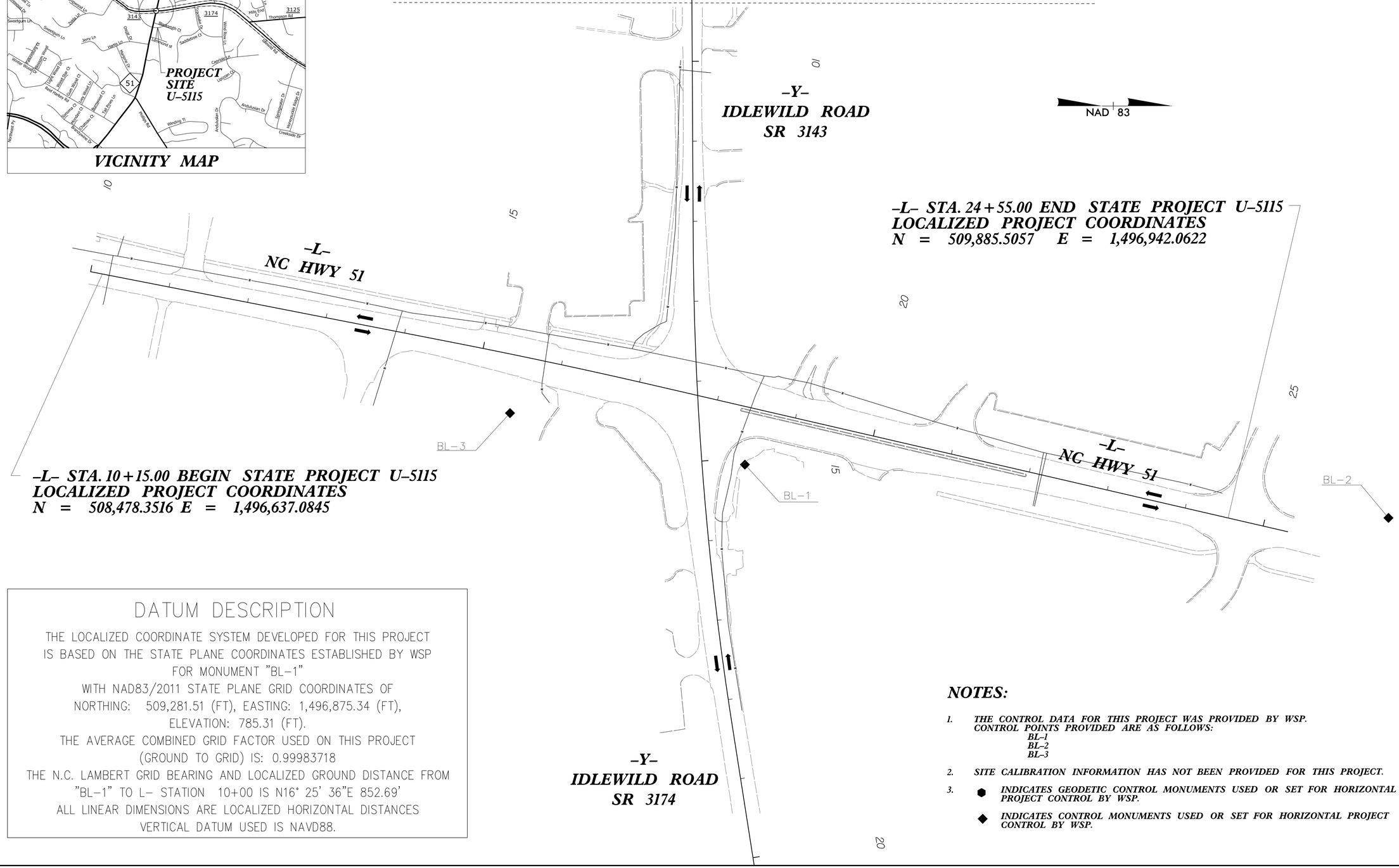

DATUM DESCRIPTION

THE LOCALIZED COORDINATE SYSTEM DEVELOPED FOR THIS PROJECT IS BASED ON THE STATE PLANE COORDINATES ESTABLISHED BY WSP FOR MONUMENT "BL-1"
WITH NAD83/2011 STATE PLANE GRID COORDINATES OF
NORTHING: 509,281.51 (FT), EASTING: 1,496,875.34 (FT),
ELEVATION: 785.31 (FT).
THE AVERAGE COMBINED GRID FACTOR USED ON THIS PROJECT (GROUND TO GRID) IS: 0.99983718
THE N.C. LAMBERT GRID BEARING AND LOCALIZED GROUND DISTANCE FROM "BL-1" TO L- STATION 10+00 IS N16° 25' 36"E 852.69'
ALL LINEAR DIMENSIONS ARE LOCALIZED HORIZONTAL DISTANCES
VERTICAL DATUM USED IS NAVD88.

NOTES:

1. THE CONTROL DATA FOR THIS PROJECT WAS PROVIDED BY WSP. CONTROL POINTS PROVIDED ARE AS FOLLOWS:
   BL-1
   BL-2
   BL-3
2. SITE CALIBRATION INFORMATION HAS NOT BEEN PROVIDED FOR THIS PROJECT.
3. ● INDICATES GEODETIC CONTROL MONUMENTS USED OR SET FOR HORIZONTAL PROJECT CONTROL BY WSP.
   ◆ INDICATES CONTROL MONUMENTS USED OR SET FOR HORIZONTAL PROJECT CONTROL BY WSP.

8/17/99

4/26/2017
R:\Roadway\Proj\U5115_RDY_TSH_01c.dgn
USER: c924407

DocuSign Envelope ID: 9B85A50C-1876-4448-8066-10A7301FFB22

PROJECT REFERENCE NO.	SHEET NO.
U-5115	2
R/W SHEET NO.	

ROADWAY DESIGN ENGINEER

NORTH CAROLINA PROFESSIONAL SEAL 33290 ENGINEER RONNELL A. THIGPEN

DocuSigned by: Ronnell Thigpen 4/27/2017
57051A863832 4EF...

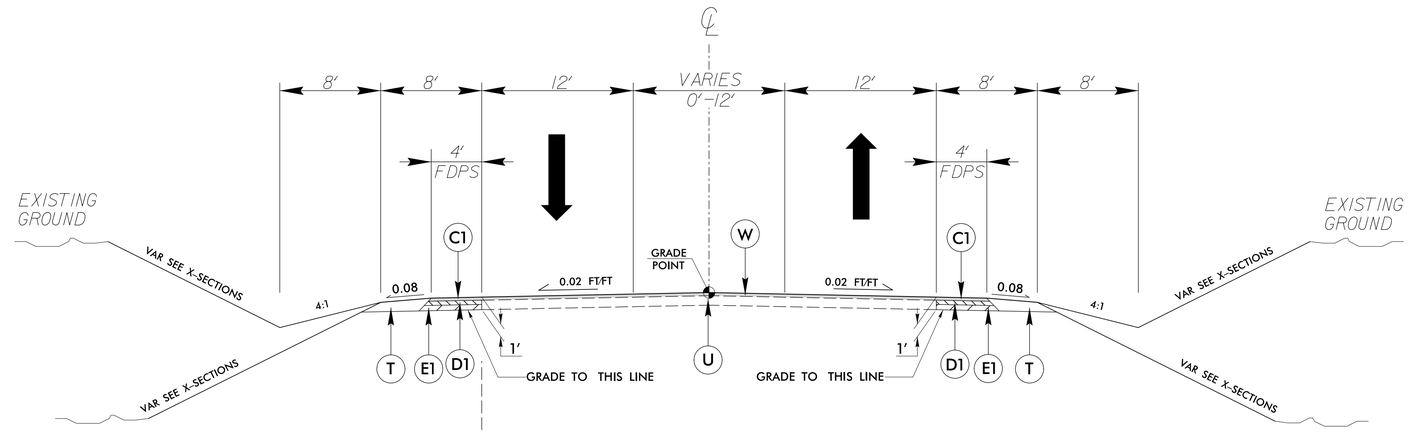

TYPICAL SECTION NO. 1

–L– STA. 10+15.00 TO STA. 13+71.06

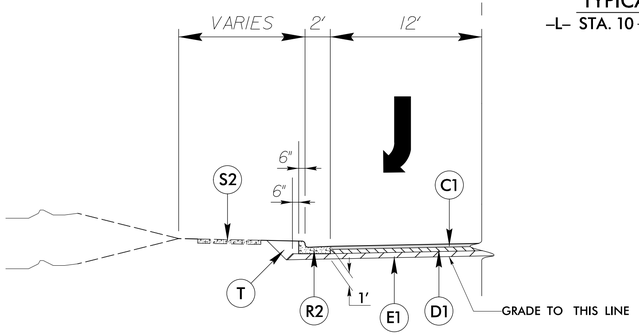

TYPICAL SECTION NO. 1A

–L– STA. 11+35.83 TO STA. 13+71.06

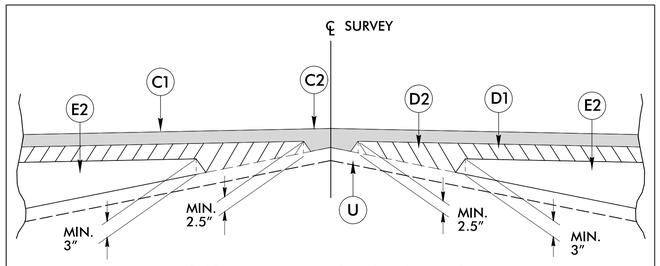

Detail Showing Method of Wedging

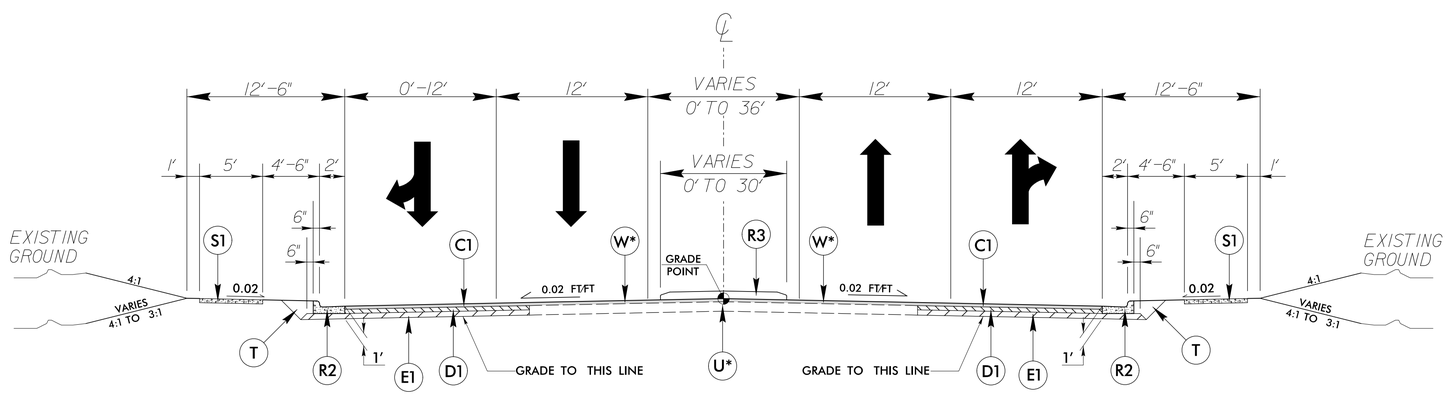

TYPICAL SECTION NO. 2

–L– STA. 13+71.06 TO STA. 16+84.47 (BEGIN ROUNDABOUT)
–L– STA. 18+64.47 (END ROUNDABOUT) TO STA. 24+55.00

*EXISTING PAVEMENT (U) TO BE REPLACED WITH FULL DEPTH SECTION (C1, D1, E1) WHERE WEDGING (W) IS GREATER THAN 1′ (APPROX. –L– STA. 16+00 TO 18+75)

PAVEMENT SCHEDULE

A1	7″ TRUCK MOUNTABLE CONCRETE ISLAND (CLASS AA CONCRETE, BLACK TINT).
C1	PROP. APPROX. 3″ ASPHALT CONCRETE SURFACE COURSE, TYPE S9.5C, AT AN AVERAGE RATE OF 168 LBS. PER SQ. YD. IN EACH OF TWO LAYERS.
C2	PROP. VAR. DEPTH ASPHALT CONCRETE SURFACE COURSE, TYPE S9.5C, AT AN AVERAGE RATE OF 112 LBS. PER SQ. YD. PER 1″ DEPTH. TO BE PLACED IN LAYERS NOT TO EXCEED 2″ IN DEPTH.
D1	PROP. APPROX. 4″ ASPHALT CONCRETE INTERMEDIATE COURSE, TYPE I19.0C, AT AN AVERAGE RATE OF 456 LBS. PER SQ. YD.
D2	PROP. VAR. DEPTH ASPHALT CONCRETE INTERMEDIATE COURSE, TYPE I19.0C, AT AN AVERAGE RATE OF 114 LBS. PER SQ. YD. PER 1″ DEPTH, TO BE PLACED IN LAYERS NOT LESS THAN 2½″ IN DEPTH OR GREATER THAN 4″ IN DEPTH.
E1	PROP. APPROX. 5″ ASPHALT CONCRETE BASE COURSE, TYPE B25.0C, AT AN AVERAGE RATE OF 570 LBS. PER SQ. YD.
E2	PROP. VAR. DEPTH ASPHALT CONCRETE BASE COURSE, TYPE B25.0C, AT AN AVERAGE RATE OF 114 LBS. PER SQ. YD. PER 1″ DEPTH. TO BE PLACED IN LAYERS NOT LESS THAN 3″ IN DEPTH OR GREATER THAN 5½″ IN DEPTH.
R1	1′-6″ CONCRETE CURB AND GUTTER (CLASS AA CONCRETE, BLACK TINT).
R2	2′-6″ CONCRETE CURB AND GUTTER.
R3	5″ MONOLITHIC CONCRETE ISLAND
S1	4″ CONCRETE SIDEWALK.
S2	EXISTING CONCRETE SIDEWALK.
T	EARTH MATERIAL.
U	EXISTING PAVEMENT.
V	MILLING BITUMINOUS PAVEMENT. VARIABLE DEPTH.
W	VARIABLE DEPTH ASPHALT PAVEMENT (SEE STANDARD WEDGING DETAIL SHEET No. 2-C)

NOTE: PAVEMENT EDGE SLOPES ARE 1:1 UNLESS SHOWN OTHERWISE.

8/17/99
4/27/2017
W:\Roadway Office NCDOT\U-5115_RAB_11320025.2000\Roadway\Proj\U5115_RDY_TYP_02.dgn
USER:04487

DocuSign Envelope ID: D7A5630C-E418-44A2-BFB9-50322DAD3730

8/17/99

PROJECT REFERENCE NO.	SHEET NO.
U-5115	2-A
R/W SHEET NO.	

ROADWAY DESIGN ENGINEER

NORTH CAROLINA PROFESSIONAL SEAL 33290 ENGINEER RONALD A. THIGPEN

DocuSigned by: Ronald A. Thigpen 5/26/2017

57051A863832 4EF...

* EXISTING PAVEMENT (U) TO BE REPLACED WITH FULL DEPTH SECTION (C1, D1, E1) WHERE WEDGING (W) IS GREATER THAN 1' (APPROX. –Y– STA. 12+25 TO 15+25)

** MINIMAL WEDGING FROM STA. 10+35.00 TO 10+53.00

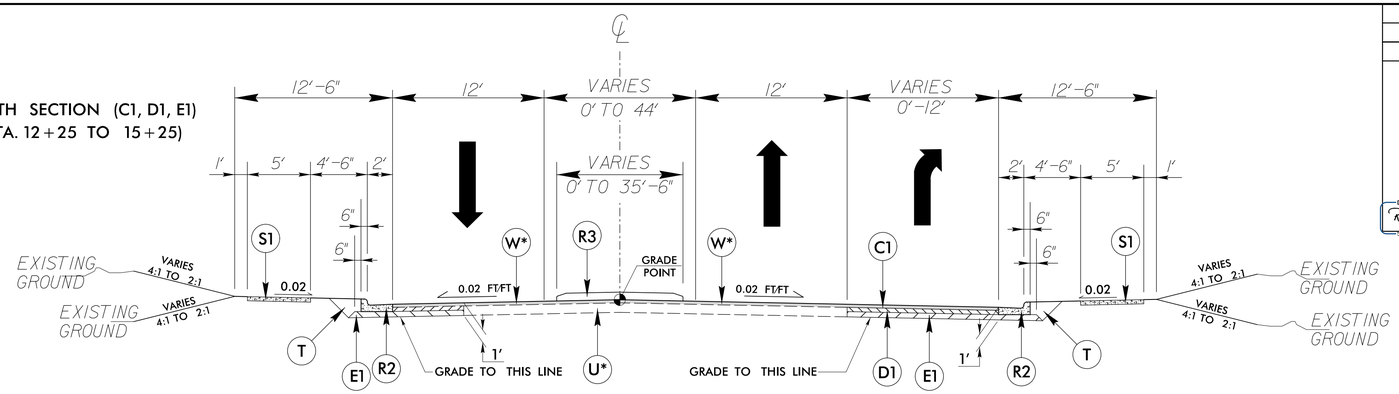

TYPICAL SECTION NO. 4

–Y– STA. 10+53.00** TO STA. 13+27.83 (BEGIN ROUNDABOUT)

–Y– STA. 15+07.84 (END ROUNDABOUT) TO STA. 17+30.00 (MIRRORED)

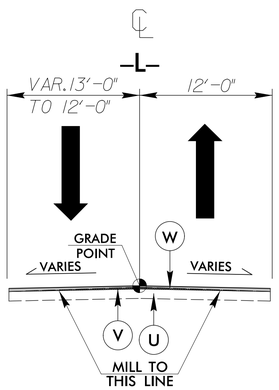

TYPICAL SECTION NO. 3

–Y– STA. 9+02.00 TO STA. 10+53.00

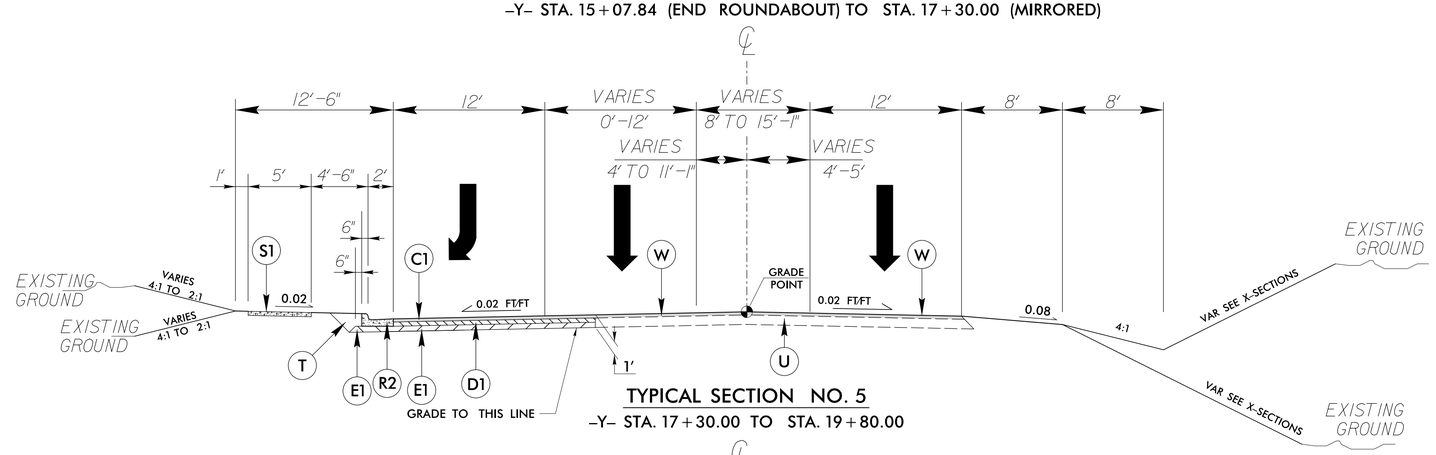

TYPICAL SECTION NO. 5

–Y– STA. 17+30.00 TO STA. 19+80.00

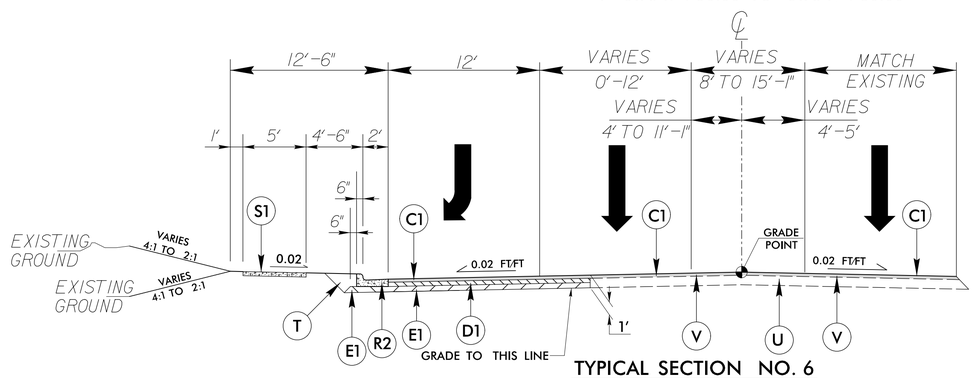

TYPICAL SECTION NO. 6

–Y– STA. 19+80.00 TO STA. 20+35.00

PAVEMENT SCHEDULE	
A1	7" TMCI (AA, BLACK TINT)
C1	3" S9.5C
D1	4" I19.5C
E1	5" B25.0C
R1	1'-6" C & G (AA, BLACK TINT)
R2	2'-6" C & G
R3	5" MCI
S1	4" SIDEWALK
T	EARTH MATERIAL
U	EXIST. PAVEMENT
V	MILLING
W	WEDGING

MODIFIED 2'-6" CURB & GUTTER DETAIL

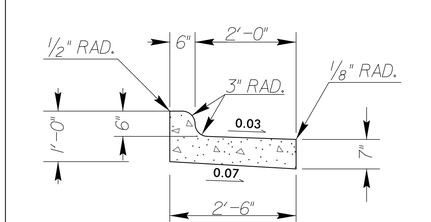

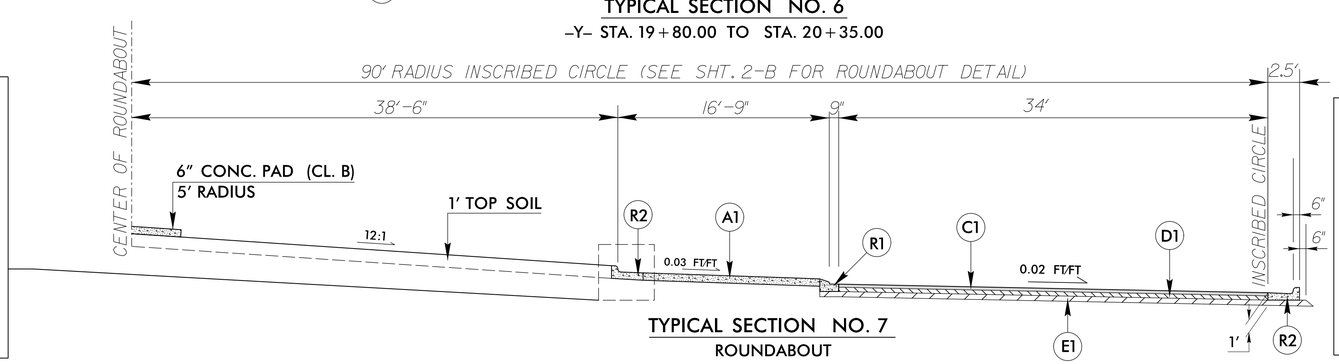

TYPICAL SECTION NO. 7

ROUNDABOUT

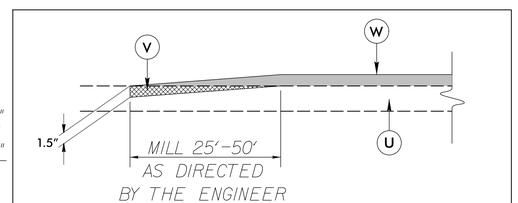

MILLING DETAIL

4/26/2017
R:\Roadway\Proj\U5115_RDY_TYP_02.dgn
USER: 94407

DocuSign Envelope ID: D7A5630C-E418-44A2-BFB9-50322DAD3730

ROUNDABOUT LAYOUT

PROJECT REFERENCE NO.	SHEET NO.
U-5115	2-B
R/W SHEET NO.	

ROADWAY DESIGN ENGINEER

NORTH CAROLINA PROFESSIONAL SEAL 33290 ENGINEER RONTELL A. THIGPEN

DocuSigned by: Rontell Thigpen 4/27/2017

57D51A6B3B324EF...

GRAPHIC SCALES

30 15 0 30 60

NOTE: SEE SHEET 4 FOR COMPLETE PLAN VIEW.

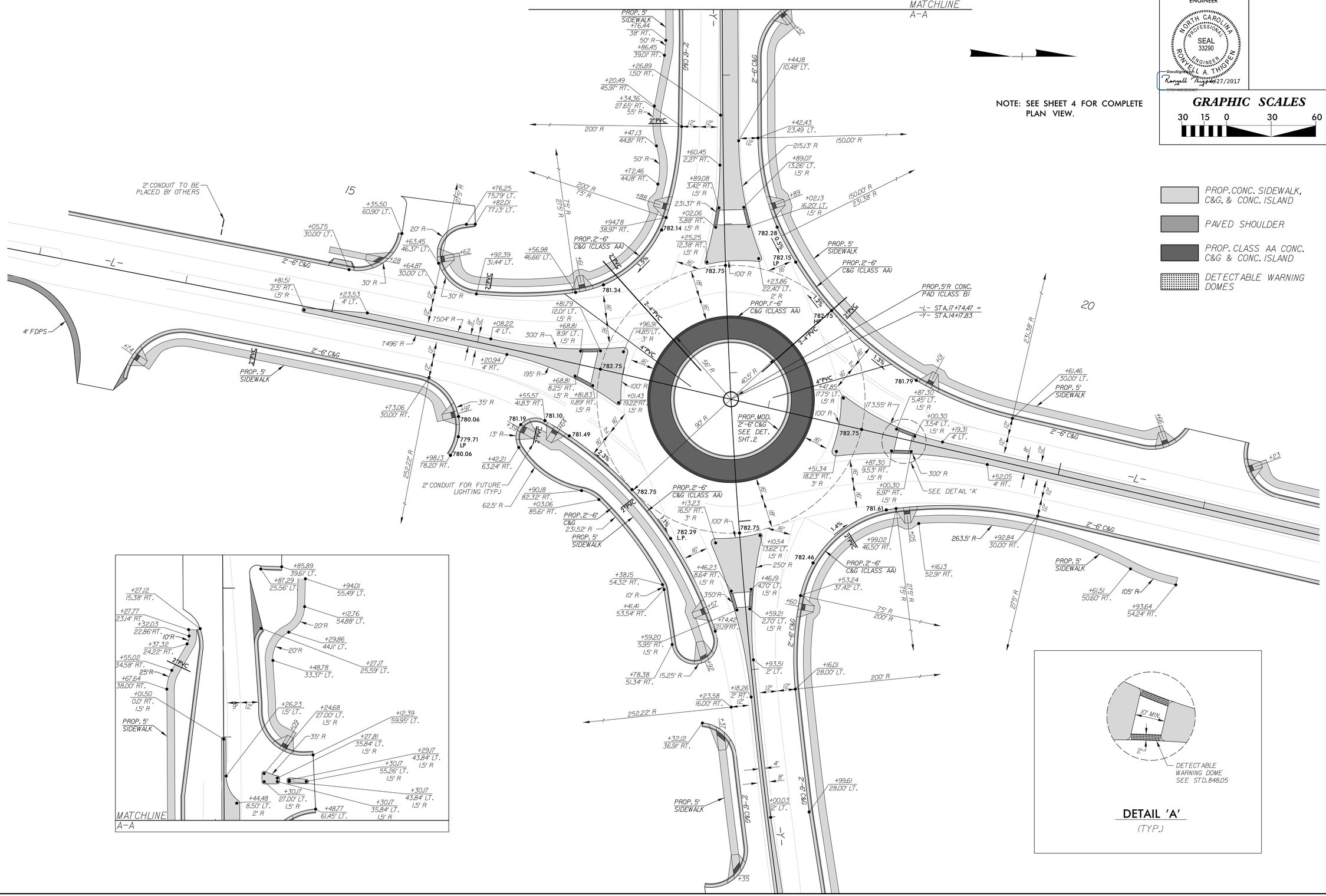

REVISIONS

8/17/99

4/27/2017
R:\Roadway\Proj\U5115_RDY_DTL_2B.dgn
USER: 84407

DocuSign Envelope ID: D7A5630C-E418-44A2-BFB9-50322DAD3730

PROJECT REFERENCE NO.	SHEET NO.
U-5115	2-C
R/W SHEET NO.	

ROADWAY DESIGN ENGINEER

NORTH CAROLINA PROFESSIONAL SEAL 33290 ENGINEER RONYELL A. THIGPEN

DocuSigned by: Ronyell Thigpen 4/27/2017
57051A8838324EF...

HORIZONTAL LAYOUT

NAD 83

NOTE: SEE SHEET 4 FOR COMPLETE PLAN VIEW.

PROP. CONC. SW, C & G, & CONC. ISLAND

PROP. SHOULDER

PROP. CLASS AA CONC. C&G & ISLAND

PROP. REMOVAL OF EXIST. ASPH. PVMT.

DETECTABLE WARNING DOMES

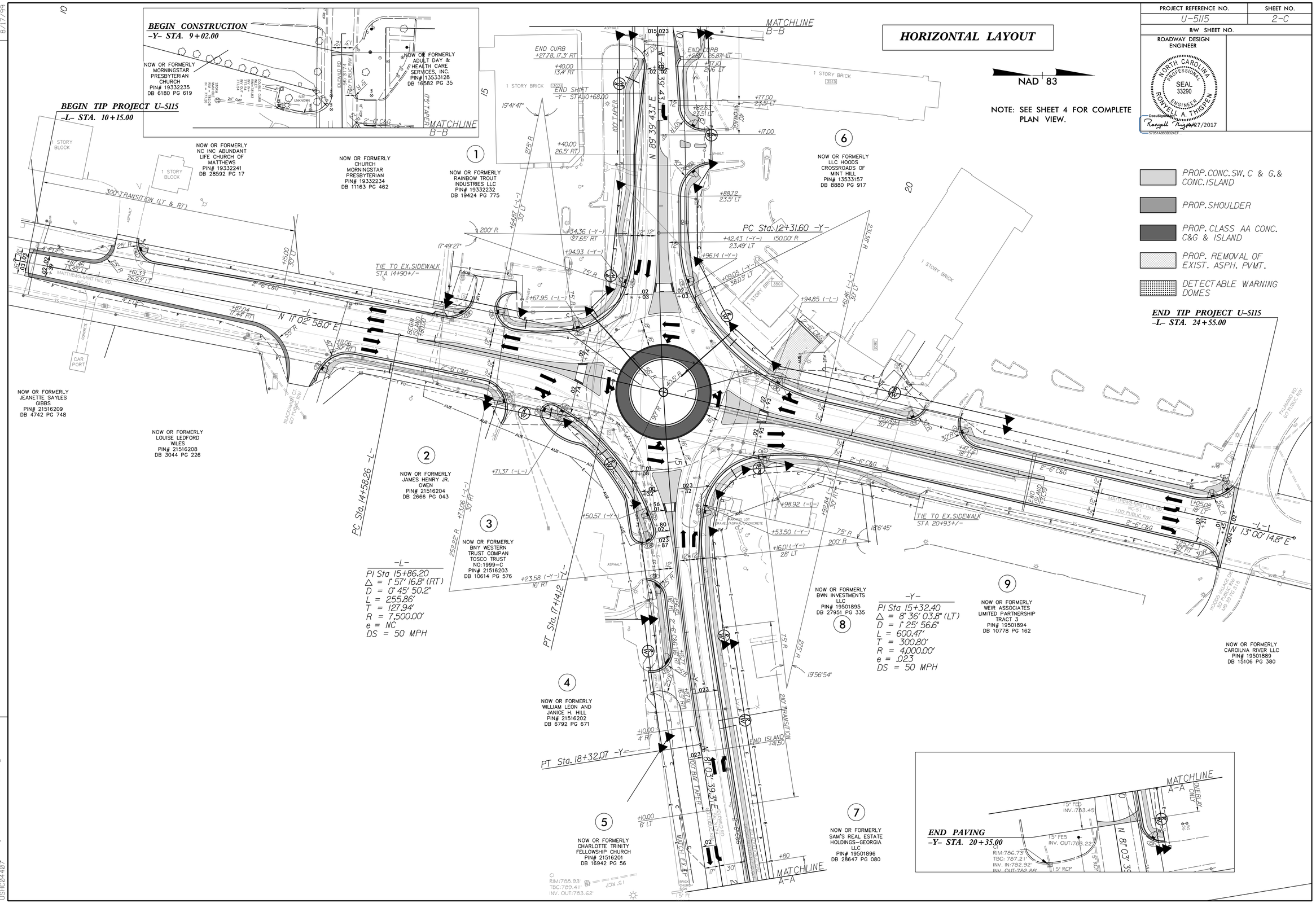

REVISIONS

8/17/99

4/27/2017
R:\Roadway\Proj\U5115_RDY_DTL_2C.dgn
USHC04407

DocuSign Envelope ID: D7A5630C-E418-44A2-BFB9-50322DAD3730

PROJECT REFERENCE NO.	SHEET NO.
U-5115	2-D
R/W SHEET NO.	

ROADWAY DESIGN ENGINEER

NORTH CAROLINA PROFESSIONAL SEAL 33290 ENGINEER RONYELLA THIGPEN

DocuSigned by: Ronyella Thigpen 7/2017
57051A863B324EF...

PAVEMENT REMOVAL LAYOUT

NAD 83

NOTE: SEE SHEET 4 FOR COMPLETE PLAN VIEW.

PROP. REMOVAL OF EXIST. ASPH. PVMT.

BEGIN TIP PROJECT U-5115
-L- STA. 10+15.00

END TIP PROJECT U-5115
-L- STA. 24+55.00

NOW OR FORMERLY
NC INC ABUNDANT LIFE CHURCH OF MATTHEWS
PIN# 19332241
DB 28592 PG 17

NOW OR FORMERLY
CHURCH MORNINGSTAR PRESBYTERIAN
PIN# 19332234
DB 11163 PG 462

1
NOW OR FORMERLY
RAINBOW TROUT INDUSTRIES LLC
PIN# 19332232
DB 19424 PG 775

6
NOW OR FORMERLY
LLC HOODS CROSSROADS OF MINT HILL
PIN# 13533157
DB 8880 PG 917

NOW OR FORMERLY
JEANETTE SAYLES GIBBS
PIN# 21516209
DB 4742 PG 748

NOW OR FORMERLY
LOUISE LEDFORD WILES
PIN# 21516208
DB 3044 PG 226

2
NOW OR FORMERLY
JAMES HENRY JR. OWEN
PIN# 21516204
DB 2666 PG 043

3
NOW OR FORMERLY
BNY WESTERN TRUST COMPAN TOSCO TRUST NO:1999-C
PIN# 21516203
DB 10614 PG 576

4
NOW OR FORMERLY
WILLIAM LEON AND JANICE H. HILL
PIN# 21516202
DB 6792 PG 671

5
NOW OR FORMERLY
CHARLOTTE TRINITY FELLOWSHIP CHURCH
PIN# 21516201
DB 16942 PG 56

7
NOW OR FORMERLY
SAM'S REAL ESTATE HOLDINGS--GEORGIA LLC
PIN# 19501896
DB 28647 PG 080

8
NOW OR FORMERLY
BWN INVESTMENTS LLC
PIN# 19501895
DB 27951 PG 335

9
NOW OR FORMERLY
WEIR ASSOCIATES LIMITED PARTNERSHIP TRACT 3
PIN# 19501894
DB 10778 PG 162

NOW OR FORMERLY
CAROLNA RIVER LLC
PIN# 19501889
DB 15106 PG 380

-L-
PI Sta 15+86.20
△ = 1° 57' 16.8" (RT)
D = 0° 45' 50.2"
L = 255.86'
T = 127.94'
R = 7,500.00'
e = NC
DS = 50 MPH

-Y-
PI Sta 15+32.40
△ = 8° 36' 03.8" (LT)
D = 1° 25' 56.6"
L = 600.47'
T = 300.80'
R = 4,000.00'
e = .023
DS = 50 MPH

PC Sta. 14+58.26 -L-
PT Sta. 17+14.12 -L-
PC Sta. 12+31.60 -Y-
PT Sta. 18+32.07 -Y-
12+25.00 (-Y-)
15+25.00 (-Y-)
16+40.00 (-L-)
18+75.00 (-L-)
N 11° 02' 58.0" E
N 89° 39' 43.1" E
N 8° 03' 39.31" E
N 13° 00' 14.8" E

REVISIONS

8/17/99

4/27/2017
R:\Roadway\Proj\U5115_RDY_DTL_2D.dgn
USHC04407

ZL0023CARIUS

COMPUTED BY: RS	DATE: 04/13/17
CHECKED BY:	DATE:

PROJECT NO.	SHEET NO.
U5115	3A-1

NORTH CAROLINA DEPARTMENT OF TRANSPORTATION
DIVISION OF HIGHWAYS

Note: Invert Elevations indicated are for Bid Purposes only and shall not be used for project construction stakeout. See "Standard Specifications For Roads and Structures, Section 300-5".

LIST OF PIPES, ENDWALLS, ETC. (FOR PIPES 48 INCHES & UNDER)

| LINE & STATION / SIZE / THICKNESS OR GAUGE | OFFSET | STRUCTURE NUMBER FROM | STRUCTURE NUMBER TO | TOP ELEVATION FT. | INVERT ELEVATION FT. | INVERT ELEVATION FT. | MINIMUM REQUIRED SLOPE % | Drainage Pipe (RCP, CSP, CAAP, HDPE, or PVC) 12 | 15 | 18 | 24 | 30 | 36 | 42 | 48 | DO NOT USE RCP | DO NOT USE CSP | DO NOT USE CAAP | DO NOT USE HDPE | DO NOT USE PVC | C. S. PIPE 12 .064 | 15 .064 | 18 .064 | 24 .064 | 30 .079 | | | 36 .079 | | | 42 .109 | 48 .109 | R. C. PIPE CLASS III 12 | 15 | 18 | 24 | 30 | 36 | 42 | 48 | R. C. PIPE CLASS IV 12 | 15 | 18 | 24 | 30 | 36 | 42 | 48 | 15" SIDE DRAIN PIPE | 18" SIDE DRAIN PIPE | 24" SIDE DRAIN PIPE | | ENDWALLS STD. 838.01 OR STD. 838.11 (UNLESS NOTED OTHERWISE) CY | REINFORCED ENDWALLS CY | DRAINAGE STRUCTURE MASONRY CY | QUANTITIES FOR DRAINAGE STRUCTURES NOTE: TOTAL LIN. FT. FOR PAY QUANTITY SHALL BE A + (1.3 X B) 0' THRU 5' EACH | A 5' THRU 10' LIN. FT. | B 10' AND ABOVE LIN. FT. | C.B. STD. 840.01 OR STD. 840.02 | FRAME, GRATES, AND HOOD STD. 840.03 GRATE TYPE E | F | G | | D.I. STD. 852.04 OR STD. 852.06 | CONCRETE TRANSITIONAL SECTION C.B. STD. 852.05 | OPEN THROAT C.B. STD. 840.04 OR STD. 840.05 | CONCRETE BRIDGE APPROACH D.I. STD. 840.13 | D.I. STD. 840.14 OR STD. 840.15 | D.I. FRAME AND GRATES STD. 840.16 | G.D.I. TYPE "A" STD. 840.17 OR STD. 840.26 | G.D.I. TYPE "B" STD. 840.18 OR STD. 840.27 | G.D.I. TYPE "D" STD. 840.19 OR STD. 840.28 | G.D.I. (W.S. FLAT) FRAME WITH GRATE STD. 840.20 | G.D.I. (W.S. FLAT) FRAME W/ 2 GRATES STD. 840.20 | G.D.I. (W.S. SAG) FRAME W/ GRATE STD. 840.22 | G.D.I. (W.S. SAG) FRAME W/ 2 GRATES STD. 840.22 | G.D.I. (N.S. SAG) FRAME W/ GRATE STD. 840.24 | G.D.I. (N.S. SAG) FRAME W/ 2 GRATES STD. 840.24 | G.D.I. (N.S. FLAT) FRAME W/ GRATE STD. 840.29 | G.D.I. (N.S. FLAT) FRAME W/ 2 GRATES STD. 840.29 | M.H. STD. 840.51, STD. 840.52, OR STD. 840.53 | M.H. FRAME AND COVER STD. 840.54 | 15" C.S. ELBOW | CONCRETE AND BRICK PIPE PLUG STD. 840.71 CY | PIPE REMOVAL LIN. FT. | REMARKS |
|---|---|---

ZL0023CARIUS

COMPUTED BY: RS	DATE: 04/13/17
CHECKED BY:	DATE:

PROJECT NO.	SHEET NO.
U5115	3A-2

NORTH CAROLINA DEPARTMENT OF TRANSPORTATION
DIVISION OF HIGHWAYS

Note: Invert Elevations indicated are for Bid Purposes only and shall not be used for project construction stakeout. See "Standard Specifications For Roads and Structures, Section 300-5".

LIST OF PIPES, ENDWALLS, ETC. (FOR PIPES 48 INCHES & UNDER)

LINE & STATION / SIZE / THICKNESS OR GAUGE	OFFSET	STRUCTURE NUMBER FROM	STRUCTURE NUMBER TO	TOP ELEVATION FT.	INVERT ELEVATION FT.	INVERT ELEVATION FT.	MINIMUM REQUIRED SLOPE %	Drainage Pipe (RCP, CSP, CAAP, HDPE, or PVC) 12	15	18	24	30	36	42	48	DO NOT USE RCP	DO NOT USE CSP	DO NOT USE CAAP	DO NOT USE HDPE	DO NOT USE PVC
L 19+94	32 RT	0437		781.2																
		0437	0438		776.6	775.3														
L 21+62	32 RT	0438		779.6																
		0438	0439		775.3	773.3														
L 24+24	32 RT	0439		776.1																
		0439	0440		773.1	772.8														
L 20+97	48 LT	0427			777.2	776.7														
L 20+33	91 LT	0425	0426		779.2	777.1														
L 24+66	42 LT	0432			772.7	772.2														
Y 9+71	29 LT	0451			778.3	778.0														
Y 9+96	54 LT	0452			779.5	779.0		18												
Y 10+50	47 LT	0446		782.4																
		0446	0447		778.9	778.8														
Y 17+70	38 RT																			
Y 18+83	32 LT	0448		786.0																
		0448	0449		781.8	781.1														
Y 20+35	33 LT	0449		784.1																
		0449	0450		781.1	779.8														
SHEET TOTALS								18												
PROJECT TOTALS								18												

| LINE & STATION | C. S. PIPE 12 | 15 | 18 | 24 | 30 | | | 36 | | | 42 | 48 | R. C. PIPE CLASS III 12 | 15 | 18 | 24 | 30 | 36 | 42 | 48 | R. C. PIPE CLASS IV 12 | 15 | 18 | 24 | 30 | 36 | 42 | 48 | 15" SIDE DRAIN PIPE | 18" SIDE DRAIN PIPE | 24" SIDE DRAIN PIPE | | ENDWALLS STD. 838.01 OR STD. 838.11 (UNLESS NOTED OTHERWISE) CY | REINFORCED ENDWALLS CY | DRAINAGE STRUCTURE MASONRY CY | QUANTITIES FOR DRAINAGE STRUCTURES 0' THRU 5' EACH | A 5' THRU 10' LIN. FT. | B 10' AND ABOVE LIN. FT. | C.B. STD. 840.01 OR STD. 840.02 | FRAME, GRATES, AND HOOD STD. 840.03 GRATE TYPE E | F | G | CONCRETE TRANSITIONAL SECTION D.I. STD. 852.04 OR STD. 852.06 | C.B. STD. 852.05 | OPEN THROAT C.B. STD. 840.04 OR STD. 840.05 | CONCRETE BRIDGE APPROACH D.I. STD. 840.13 | D.I. STD. 840.14 OR STD. 840.15 | D.I. FRAME AND GRATES STD. 840.16 | G.D.I. TYPE "A" STD. 840.17 OR STD. 840.26 | G.D.I. TYPE "B" STD. 840.18 OR STD. 840.27 | G.D.I. TYPE "D" STD. 840.19 OR STD. 840.28 | G.D.I. (W.S. FLAT) FRAME WITH GRATE STD. 840.20 | G.D.I. (W.S. FLAT) FRAME W/ 2 GRATES STD. 840.20 | G.D.I. (W.S. SAG) FRAME W/ GRATE STD. 840.22 | G.D.I. (W.S. SAG) FRAME W/ 2 GRATES STD. 840.22 | G.D.I. (N.S. SAG) FRAME W/ GRATE STD. 840.24 | G.D.I. (N.S. SAG) FRAME W/ 2 GRATES STD. 840.24 | G.D.I. (N.S. FLAT) FRAME W/ GRATE STD. 840.29 | G.D.I. (N.S. FLAT) FRAME W/ 2 GRATES STD. 840.29 | M.H. STD. 840.51, STD. 840.52, OR STD. 840.53 | M.H. FRAME AND COVER STD. 840.54 | 15" C.S. ELBOW | CONCRETE AND BRICK PIPE PLUG STD. 840.71 CY | PIPE REMOVAL LIN. FT. | REMARKS |
|---|---|---|---|---|---|---|---|---|---|---|---|---|---|---|---|---|---|---

DocuSign Envelope ID: D7A5630C-E418-44A2-BFB9-50322DAD3730

COMPUTED BY: EWB	DATE: 9-25-2014
CHECKED BY: JLS	DATE: 9-25-2014

STATE OF NORTH CAROLINA
DIVISION OF HIGHWAYS

PROJECT REFERENCE NO.	SHEET NO.
U-5115	3-B

RIGHT OF WAY AREA DATA

PARCEL NO.	PROPERTY OWNERS NAMES	TOTAL ACREAGE	TOTAL RIGHT OF WAY AREA TAKEN	AREA REMAINING RT.	AREA REMAINING LT.	TEMP. CONST. EASE.	PERM. DRAIN. EASE.	AERIAL UTL. EASE.
1	RAINBOW TROUT PROPERTIES LLC		7366.84 SF			2407.85 SF		943.30 SF
2	JAMES HENRY JR. OWEN & JAON OWEN		87.12 SF					1647.41 SF
3	BNY WESTERN TRUST		1631.03 SF			2103.78 SF		6076.09 SF
4	WILLIAM LEON HILL & JANICE H. HILL		1457.98 SF			416.37 SF		
5	CHARLOTTE TRINITY FELLOWSHIP CHURCH		NONE			1664.46 SF		
6	LLC HOODS CROSSROADS OF MINT HILL		11948.68 SF			3976.45 SF		1360.69 SF
7	SAM'S REAL ESTATE HOLDINGS-GEORGIA LLC		2713.24 SF			1414.50 SF		
8	BWN INVESTMENTS LLC		7549.67 SF			2950.32 SF		4412.82 SF
9	WEIR ASSOCIATES LIMITED PARTNERSHIP		NONE			927.99 SF		

SUMMARY OF EARTHWORK

LINE	STATION	STATION	UNCL. EXCAV. (CY)	EMBANK. +15% (CY)	BORROW (CY)	WASTE (CY)
L	10+15.00	24+55.00	1077	2943	1866	
Y	9+02.00	13+27.83	584	329		255
Y	15+50.00	20+35.00	393	474	81	
SUBTOTAL:			2054	3746	1947	255
EARTH TO REPLACE BORROW					-255	-255
PROJECT TOTALS:			2054	3746	1692	0
ESTIMATE 5% TOPSOIL FOR BORROW PITS:					85	
GRAND TOTALS:			2054	3746	1777	0
SAY:			2060		1780	

NOTE:
APPROXIMATE QUANTITIES ONLY. UNCLASSIFIED EXCAVATION, BORROW EXCAVATION, FINE GRADING, CLEARING AND GRUBBING, AND REMOVAL OF EXISTING PAVEMENT WILL BE PAID FOR AT THE CONTRACT LUMP SUM PRICE FOR "GRADING."

PAVEMENT REMOVAL SUMMARY

LINE	STATION	STATION	LOCATION LT/RT/CL	YD^2
-L-	16+40.00	18+75.00	CL	1,520.71 SY
-L-	15+60+/-	15+75+/-	LT	35.86 SY
-L-	16+40+/-	17+60+/-	RT	155.21 SY
-L-	18+85+/-	19+35+/-	LT	296.68 SY
-L-	19+60+/-	20+82+/-	RT	115.74 SY
-Y-	12+25.00	13+90+/-	CL	1,084.88 SY
-Y-	14+50+/-	15+25.00	CL	606.70 SY
-Y-	15+70+/-	16+00+/-	RT	40.19 SY
-Y-	16+40+/-	17+40+/-	RT	69.38 SY
-Y-	17+63+/-	18+42+/-	RT	4.57 SY
			TOTAL:	3,995.51 SY
			SAY:	4,000 SY

CURB & GUTTER SUMMARY

STANDARD 2'-6" CURB AND GUTTER				
LINE	STATION	STATION	LENGTH	REMARKS
L	11+35.83 (LT)	16+54.98 (LT)	575.24	
L	19+08.55 (LT)	24+49.48 (LT)	537.76	
L	13+71.06 (RT)	17+24.99 (RT)	415.10	
L	19+12.37 (RT)	24+55.00 (RT)	555.03	
Y	9+85.29 (LT)	12+82.50 (LT)	279.14	
Y	15+67.30 (LT)	20+65.18 (LT)	509.81	
Y	10+27.12 (RT)	12+81.39 (RT)	256.36	
Y	14+99.42 (RT)	17+40.51 (RT)	288.44	
L	STA. 19+00+/- (ABANDONED DRIVEWAY)		35.68	PARKING LOT
L, Y	-L- 16+67.95 (LT)	-Y- 12+94.93 (RT)	70.81	
L, Y	-L- 18+94.85 (LT)	-Y- 12+96.14 (LT)	150.54	
L, Y	-L- 16+71.37 (RT)	-Y- 15+50.57 (RT)	147.13	
L, Y	-L- 18+98.92 (RT)	-Y- 15+53.24 (LT)	92.83	
TOTAL STANDARD 2'-6" CURB & GUTTER:			3,913.87	
SAY:			3,920	
CLASS AA CONCRETE 1'-6" CURB AND GUTTER				
LINE	STATION	STATION	LENGTH	REMARKS
L, Y	CENTRAL ISLAND		351.86	
TOTAL CLASS AA 1'-6" CURB & GUTTER:			351.86	
SAY:			360	
MODIFIED 2'-6" CURB AND GUTTER				
LINE	STATION	STATION	LENGTH	REMARKS
L, Y	CENTRAL ISLAND		254.47	
TOTAL MODIFIED 2'-6" CURB & GUTTER:			254.47	
SAY:			260	

6/21/00
4/26/2017
R:\Roadway\Proj\U5115_RDY_SUM_03b.dgn
USER:04427

DocuSign Envelope ID: D7A5630C-E418-44A2-BFB9-50322DAD3730

COMPUTED BY: HC	DATE: 12-13-2014
CHECKED BY: RS	DATE: 12-15-2014

PROJECT REFERENCE NO.	SHEET NO.
U-5115	3-C

STATE OF NORTH CAROLINA
DIVISION OF HIGHWAYS

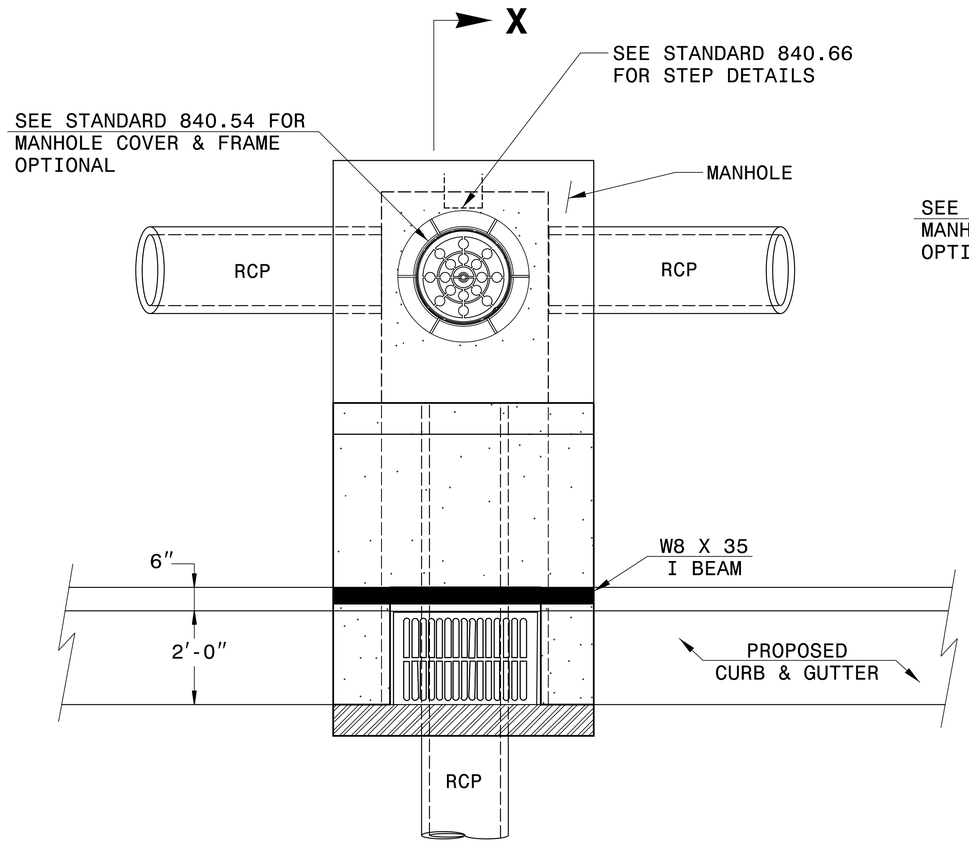

PLAN

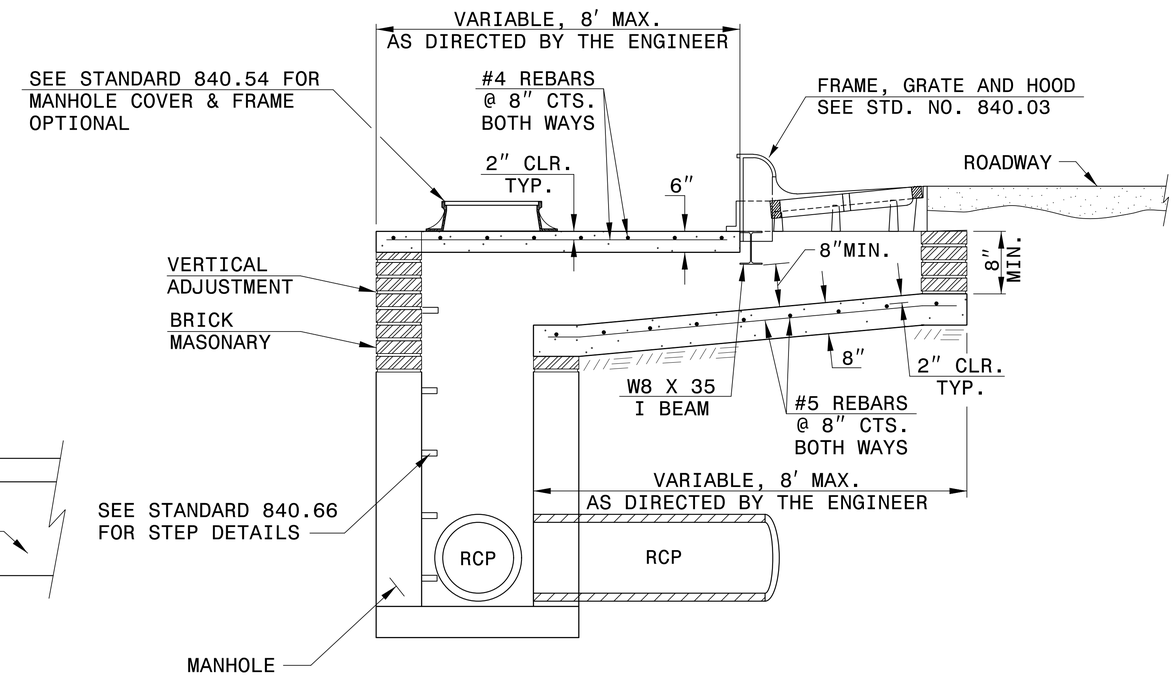

SECTION X-X

NOTES:

MORTAR JOINTS ½" TO ¼" THICK.

USE CLASS "B" CONCRETE THROUGHOUT.

USE TYPE "E", "F" AND "G" GRATES UNLESS OTHERWISE INDICATED.

USE BRICK OR CONCRETE BLOCK WHICH COMPLIES WITH THE REQUIREMENTS OF SECTION 840 OF THE STANDARD SPECIFICATIONS.

CHAMFER ALL EXPOSED CORNERS 1".

PROVIDE ALL CATCH BASINS OVER 3'-6" IN DEPTH WITH STEPS 12" ON CENTER. USE STEPS WHICH COMPLY WITH STD. DRAWING NO. 840.66.

DRAWING NOT TO SCALE.

OFFSET CATCH BASIN WITH MANHOLE

6/21/00
4/26/2017
A:\Contracts\Proj\U5115_RDY_SUM_03C.dgn
USER:HC04427

DocuSign Envelope ID: D7A5630C-E418-44A2-BFB9-50322DAD3730

PROJECT REFERENCE NO.	SHEET NO.
U-5115	4
R/W SHEET NO.	
ROADWAY DESIGN ENGINEER	HYDRAULICS ENGINEER

NORTH CAROLINA PROFESSIONAL SEAL 33290 ENGINEER RONNELL A THERPEN — DocuSigned by: Ronnell Therpen 4/27/2017

NORTH CAROLINA PROFESSIONAL SEAL 27876 ENGINEER FRANK KAINA STANCELL — DocuSigned by: Kaina Stancell 4/27/2017

NAD 83

NOTE: SEE DETAIL SHEET 2-C FOR ROUNDABOUT LAYOUT.
SEE DETAIL SHEET 2-D FOR HORIZONTAL LAYOUT.

PROP. CONC. SW, C & G, & CONC. ISLAND
PROP. SHOULDER
PROP. CLASS AA CONC. C&G & ISLAND
PROP. REMOVAL OF EXIST. ASPH. PVMT.
DETECTABLE WARNING DOMES

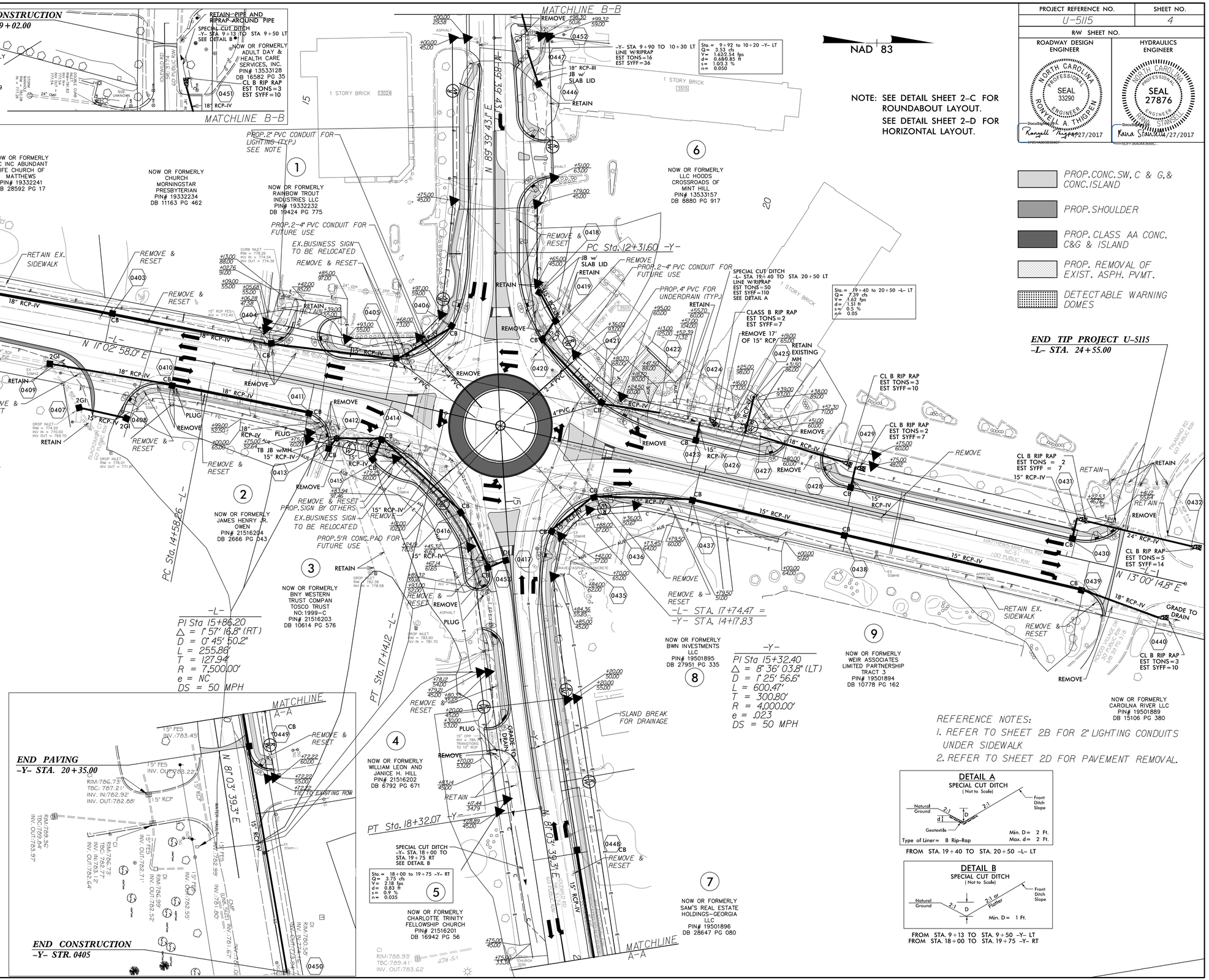

SANITARY SEWER TABLE			
MANHOLE	RIM	INV. IN	INV. OUT
1	765.92	761.67 (2)	761.55
2	770.82	763.42 (3)	763.32 (1)
3	774.25	766.15 (4)	764.75 (2)
4	778.64	768.74 (5)	768.69 (3)
5	782.27	771.87 (6)	771.47 (4)
		771.57 (7)	
		773.77	
6	779.69	773.89	773.69 (5)
7	784.12	772.12 (8)	771.92 (5)
8	785.75	773.35 (9)	772.75 (7)
9	785.75	773.35 (9)	772.75 (7)
10	784.76	774.76	774.26 (8)

STORM SEWER TABLE			
STR	RIM	INV. IN	INV. OUT
A	783.44	779.04	778.76
B	784.13	782.48	782.12
C	783.94	782.34	781.99
P-1		778.56	778.37
D	783.81	780.81	780.65
E	785.83	779.23	776.73
P-2		776.44	774.91
P-3		772.73	772.17
F	778.08		773.28
G	777.18	773.18 (F)	772.98 (H)
H	777.37	772.85 (G)	772.80 (P-4)
		772.85 (I)	
P-4		772.80 (H)	772.59
P-5		773.28	772.51
L	778.95	776.40 (J)	773.35 (N)
		773.40 (K)	
M	778.48		777.52
N	776.02	772.02 (P-6)	771.87 (O)
		771.93 (L)	
P-6		776.97	772.02 (N)
O	771.53	768.33 (N)	768.23 (P)
P	768.64	765.44	763.94 (Q)
		764.04 (O)
Q	766.29	761.89	761.79
R	765.55	761.15	761.05
S	776.43	774.23	774.08
		774.13 (P-7)	
P-7		776.53	774.13
P-8		778.45	778.39

DETAIL A
SPECIAL CUT DITCH
(Not to Scale)
Natural Ground, 2:1, D, d, 2:1, Front Ditch Slope, Geotextile
Type of Liner= B Rip-Rap
Min. D= 2 Ft.
Max. d= 2 Ft.
FROM STA. 19+40 TO STA. 20+50 -L- LT

DETAIL B
SPECIAL CUT DITCH
(Not to Scale)
Natural Ground, 2:1, D, 2:1 or Flatter, Front Ditch Slope
Min. D= 1 Ft.
FROM STA. 9+13 TO STA. 9+50 -Y- LT
FROM STA. 18+00 TO STA. 19+75 -Y- RT

REVISIONS

8/17/99

4/27/2017
R:\Roadway\Proj\U5115_RDY_PSH_04.dgn
USHC04407

DocuSign Envelope ID: D7A5630C-E418-44A2-BFB9-50322DAD3730

5/28/99

PROJECT REFERENCE NO.	SHEET NO.
U-5115	5

ROADWAY DESIGN ENGINEER

NORTH CAROLINA PROFESSIONAL SEAL 33290 ENGINEER ROWZELL A. THIGPEN

DocuSigned by: Rowzell Thigpen 4/27/2017

HYDRAULICS ENGINEER

NORTH CAROLINA PROFESSIONAL SEAL 27876 ENGINEER RAINA STANSELL

DocuSigned by: Raina Stansell 4/27/2017

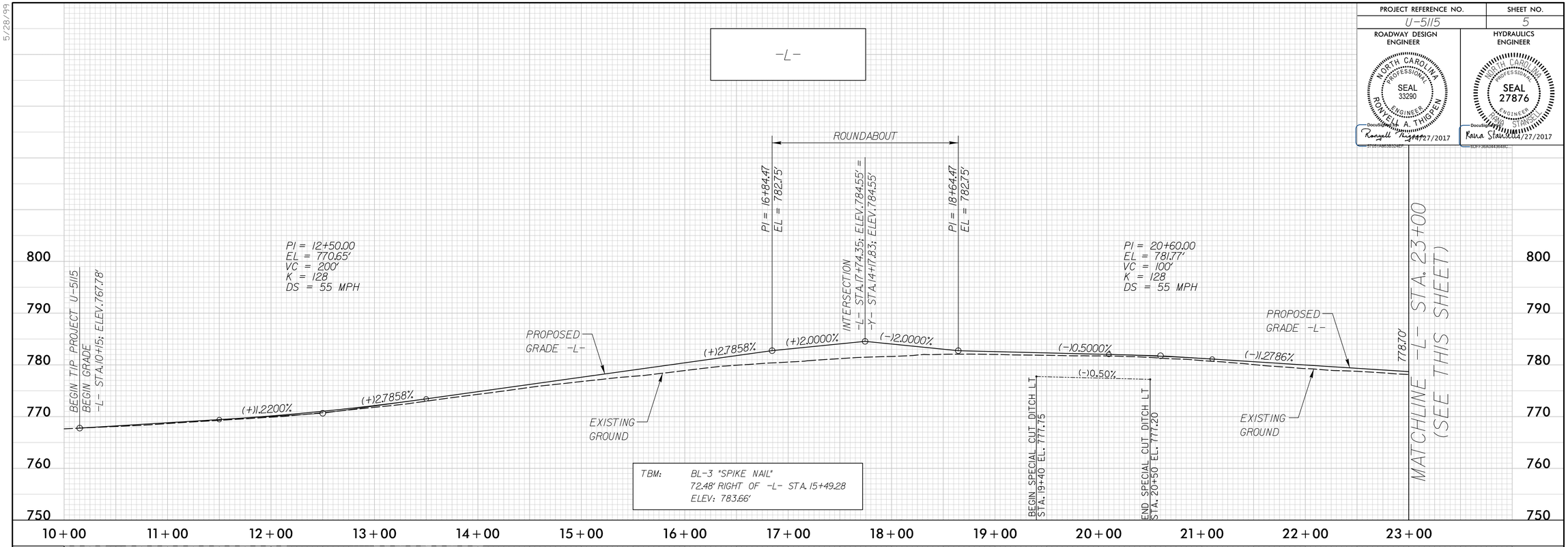

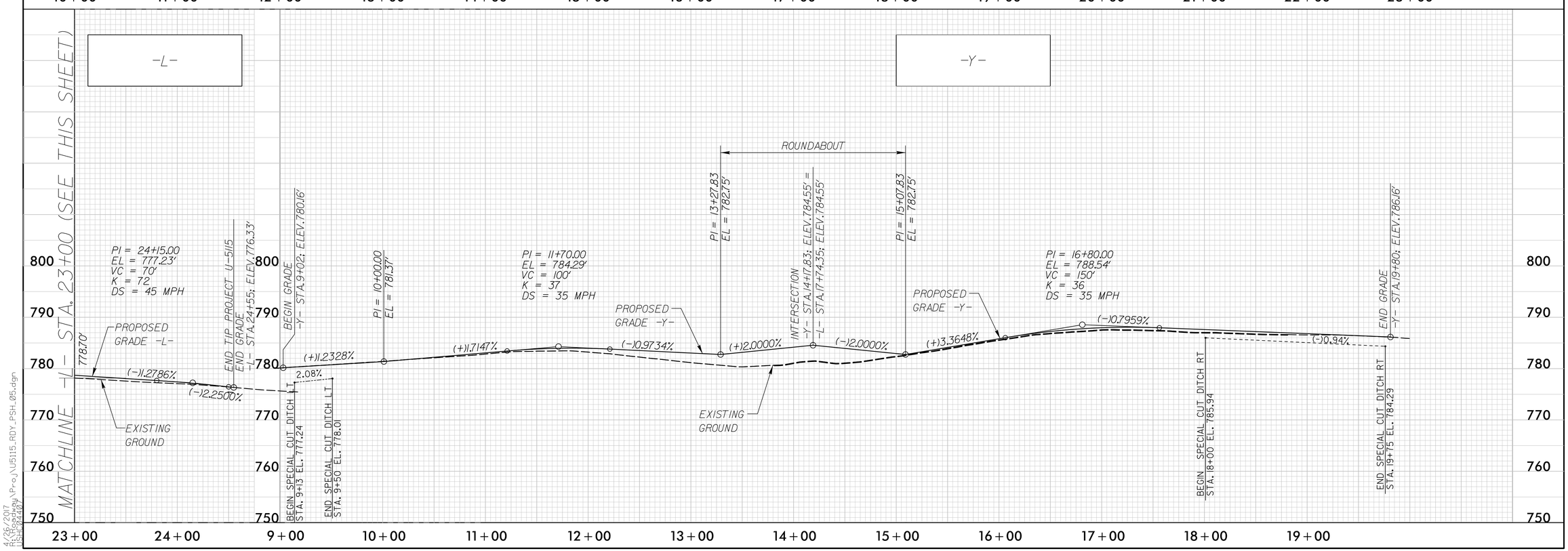

4/26/2017
R:\Roadway\Proj\U5115_RDY_PSH_05.dgn
USER: 04487

DocuSign Envelope ID: 55E06D70-7789-40A3-900F-62D1EADCB546

STATE OF NORTH CAROLINA
DIVISION OF HIGHWAYS

PAVEMENT MARKING & SIGNING PLAN

MECKLENBURG COUNTY

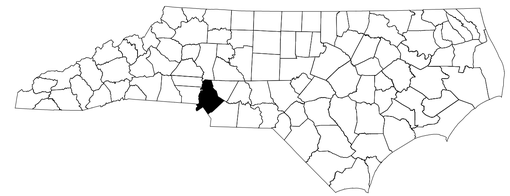

INDEX OF SHEETS

SHEET NO.	TITLE
PMP-1	TITLE SHEET, INDEX OF SHEETS, LIST OF APPLICABLE ROADWAY STANDARD DRAWINGS, AND GENERAL NOTES
PMP-2	PAVEMENT MARKING PLAN AND PAVEMENT MARKING SCHEDULE
SIGN-1	SIGNING PLAN

ROADWAY STANDARD DRAWINGS

THE FOLLOWING ROADWAY STANDARDS AS SHOWN IN "ROADWAY STANDARD DRAWINGS" - PROJECT SERVICES UNIT - N.C. DEPARTMENT OF TRANSPORTATION - RALEIGH, N.C., DATED JANAUARY 2012 ARE APPLICABLE TO THIS PROJECT AND BY REFERENCE HEREBY ARE CONSIDERED A PART OF THESE PLANS:

STD. NO.	TITLE
904.10	ORIENTATION OF GROUND MOUNTED SIGNS
904.50	MOUNTING OF TYPE 'D', 'E' AND 'F' SIGNS ON 'U' CHANNEL POSTS
1205.01	PAVEMENT MARKINGS - LINE TYPES AND OFFSETS
1205.02	PAVEMENT MARKINGS - TWO LANE AND MULTILANE ROADWAYS
1205.04	PAVEMENT MARKINGS - INTERSECTIONS
1205.05	PAVEMENT MARKINGS - TURNS LANES
1205.06	PAVEMENT MARKINGS - LANE DROPS
1205.07	PAVEMENT MARKINGS - PEDESTRIAN CROSSWALKS
1205.08	PAVEMENT MARKINGS - SYMBOLS AND WORD MESSAGES
1205.09	PAVEMENT MARKINGS - PAINTED ISLANDS

THE FOLLOWING STANDARD DRAWINGS AS SHOWN IN "TYPICAL LAYOUT - ROUNDABOUTS SIGNING AND PAVEMENT MARKINGS" SIGNING AND DELINEATION UNIT - N.C. DEPARTMENT OF TRANSPORTATION - RALEIGH, N.C., DATED JULY 8, 2013 ARE APPLICABLE TO THIS PROJECT AND BY RREFERENCE HEREBY ARE CONSIDERED A PART OF THESE PLANS:

STD. NO.	TITLE
NA	TYPICAL TWO LANE ROUNDABOUT SIGNING, WITH PEDESTRIANS
NA	TYPICAL TWO LANE ROUNDABOUT MARKINGS, WITH PEDESTRIANS

GENERAL NOTES / LOCAL NOTES

CHANGES MAY BE REQUIRED WHEN PHYSICAL DIMENSIONS IN THE DETAIL DRAWINGS, STANDARD DETAILS AND ROADWAY DETAILS ARE NOT ATTAINABLE TO MEET FIELD CONDITIONS, OR RESULT IN DUPLICATE, OR UNDESIRED OVERLAPPING OF DEVICES. MODIFICATION MAY INCLUDE: MOVING, SUPPLEMENTING, COVERING OR REMOVAL OF DEVICES, AS DIRECTED BY THE ENGINEER.

THE FOLLOWING GENERAL NOTES APPLY AT ALL TIMES FOR THE DURATION OF THE CONSTRUCTION PROJECT, EXCEPT WHEN OTHERWISE NOTED IN THE PLAN, OR DIRECTED BY THE ENGINEER.

PAVEMENT MARKINGS AND MARKERS

A) INSTALL PAVEMENT MARKINGS AND PAVEMENT MARKERS ON THE FINAL SURFACE AS FOLLOWS:

ROAD NAME	MARKING	MARKER
NC 51 (Matthews–Mint Hill Rd)	Thermoplastic	None
SR 3143 /SR 3174 (Idlewild Rd)	Thermoplastic	None

B) TIE PROPOSED PAVEMENT MARKING LINES TO EXISTING PAVEMENT MARKING LINES.

C) REMOVE /REPLACE ANY CONFLICTING /DAMAGED PAVEMENT MARKINGS AND MARKERS BY THE END OF EACH DAY'S OPERATION.

WSP | PARSONS BRINCKERHOFF
434 Fayetteville Street Suite 1500
Raleigh, NC 27601 - 919.836.4040
www.wspgroup.com
LICENSE NO. F-0891

PLAN PREPARED BY:

ERIC W. BOWMAN, PE — TRAFFIC ENGINEER
RONYELL THIGPEN, PE — SR. TRANSPORTATION DESIGNER
HOLLY CHRISTENBURY, PE — TRANSPORATION DESIGNER

APPROVED: _____
DATE: _____

SEAL

NORTH CAROLINA PROFESSIONAL SEAL 043754 ENGINEER ERIC W. BOWMAN

DocuSigned by: Eric Bowman
880CB7A650CE4CD...

4/27/2017

SHEET NO.
PMP–1

U–5115

TIP PROJECT:

4/26/2017
J:\U-5115_RAB_II320025.000\Traffic\TrafficControl\TCP\U5115_TC_PSH_PMP_01.dgn
USER0442

DocuSign Envelope ID: 55E06D70-7789-40A3-900F-62D1EADCB546

PROJ. REFERENCE NO.	SHEET NO.
U-5115	PMP-2

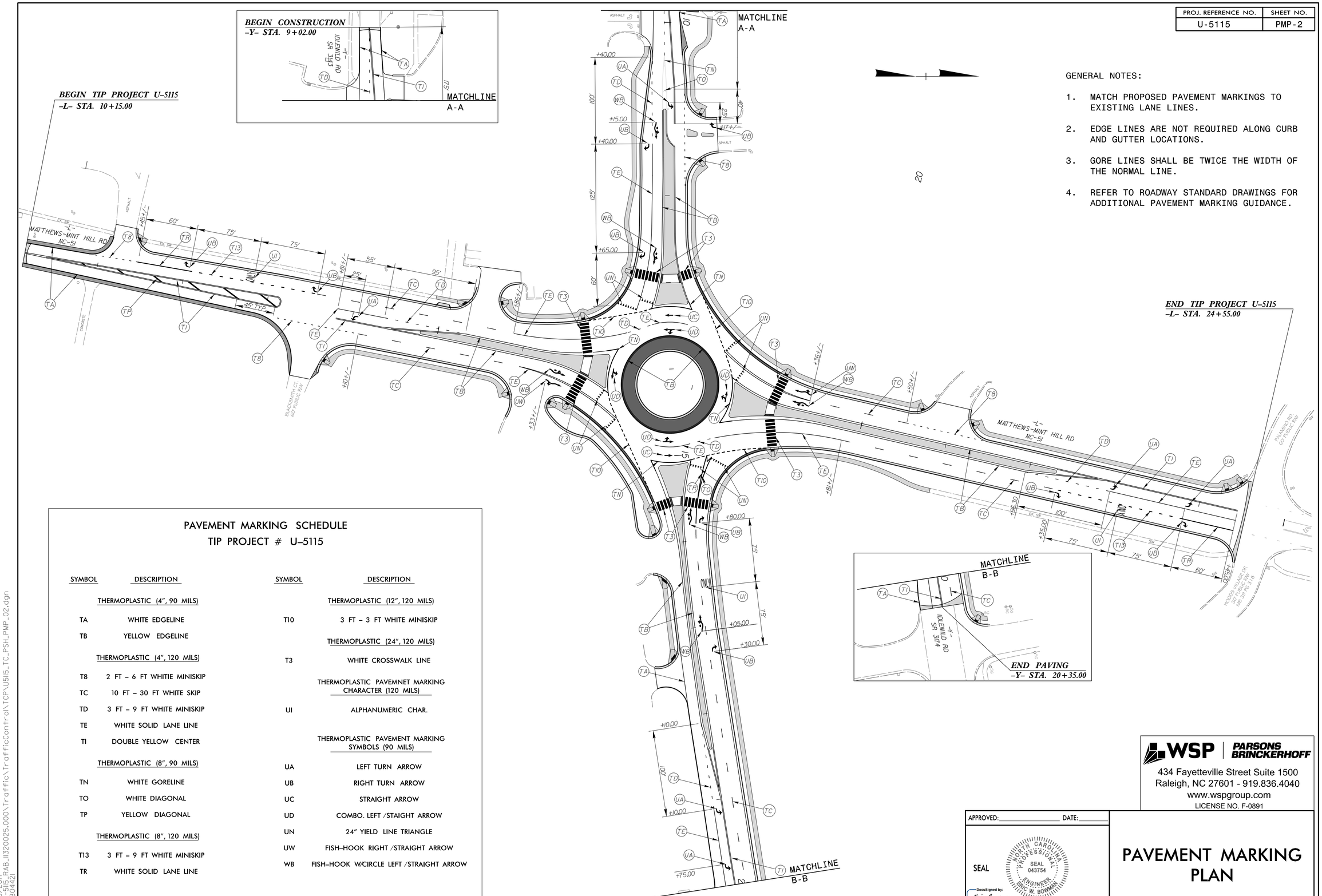

GENERAL NOTES:

1. MATCH PROPOSED PAVEMENT MARKINGS TO EXISTING LANE LINES.
2. EDGE LINES ARE NOT REQUIRED ALONG CURB AND GUTTER LOCATIONS.
3. GORE LINES SHALL BE TWICE THE WIDTH OF THE NORMAL LINE.
4. REFER TO ROADWAY STANDARD DRAWINGS FOR ADDITIONAL PAVEMENT MARKING GUIDANCE.

PAVEMENT MARKING SCHEDULE
TIP PROJECT # U-5115

SYMBOL	DESCRIPTION
	THERMOPLASTIC (4", 90 MILS)
TA	WHITE EDGELINE
TB	YELLOW EDGELINE
	THERMOPLASTIC (4", 120 MILS)
T8	2 FT – 6 FT WHITIE MINISKIP
TC	10 FT – 30 FT WHITE SKIP
TD	3 FT – 9 FT WHITE MINISKIP
TE	WHITE SOLID LANE LINE
TI	DOUBLE YELLOW CENTER
	THERMOPLASTIC (8", 90 MILS)
TN	WHITE GORELINE
TO	WHITE DIAGONAL
TP	YELLOW DIAGONAL
	THERMOPLASTIC (8", 120 MILS)
T13	3 FT – 9 FT WHITE MINISKIP
TR	WHITE SOLID LANE LINE

SYMBOL	DESCRIPTION
	THERMOPLASTIC (12", 120 MILS)
T10	3 FT – 3 FT WHITE MINISKIP
	THERMOPLASTIC (24", 120 MILS)
T3	WHITE CROSSWALK LINE
	THERMOPLASTIC PAVEMNET MARKING CHARACTER (120 MILS)
UI	ALPHANUMERIC CHAR.
	THERMOPLASTIC PAVEMENT MARKING SYMBOLS (90 MILS)
UA	LEFT TURN ARROW
UB	RIGHT TURN ARROW
UC	STRAIGHT ARROW
UD	COMBO. LEFT /STAIGHT ARROW
UN	24" YIELD LINE TRIANGLE
UW	FISH-HOOK RIGHT /STRAIGHT ARROW
WB	FISH-HOOK W/CIRCLE LEFT /STRAIGHT ARROW

WSP | PARSONS BRINCKERHOFF
434 Fayetteville Street Suite 1500
Raleigh, NC 27601 - 919.836.4040
www.wspgroup.com
LICENSE NO. F-0891

APPROVED:_____ DATE:_____

SEAL

NORTH CAROLINA PROFESSIONAL SEAL 043754 ENGINEER ERIC W. BOWMAN

DocuSigned by: Eric Bowman
880CB7A550CE4CD...
4/27/2017

PAVEMENT MARKING PLAN

4/26/2017
J:\U-5115_RAB_II320025.000\Traffic\TrafficControl\TCP\U5115_TC_PSH_PMP_02.dgn
USEB0442I

TIP PROJECT: U-5115

STATE	STATE PROJECT REFERENCE NO.	SHEET NO.	TOTAL SHEETS
N.C.	U-5115	EC-1	

STATE PROJ. NO.	F.A. PROJ. NO.	DESCRIPTION

See Sheet 1-A For Index of Sheets

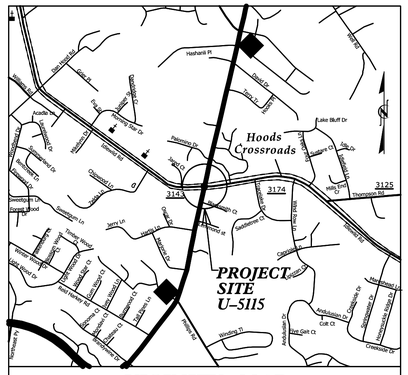

VICINITY MAP

STATE OF NORTH CAROLINA
DIVISION OF HIGHWAYS

PLAN FOR PROPOSED
HIGHWAY EROSION CONTROL

MECKLENBURG COUNTY

LOCATION: INTERSECTION OF MATTHEWS–MINT HILL RD (NC 51) AND IDLEWILD ROAD (SR 3143 & SR 3174)

TYPE OF WORK: GRADING, DRAINAGE, EROSION CONTROL, PAVING, PAVEMENT MARKINGS AND SIGNING

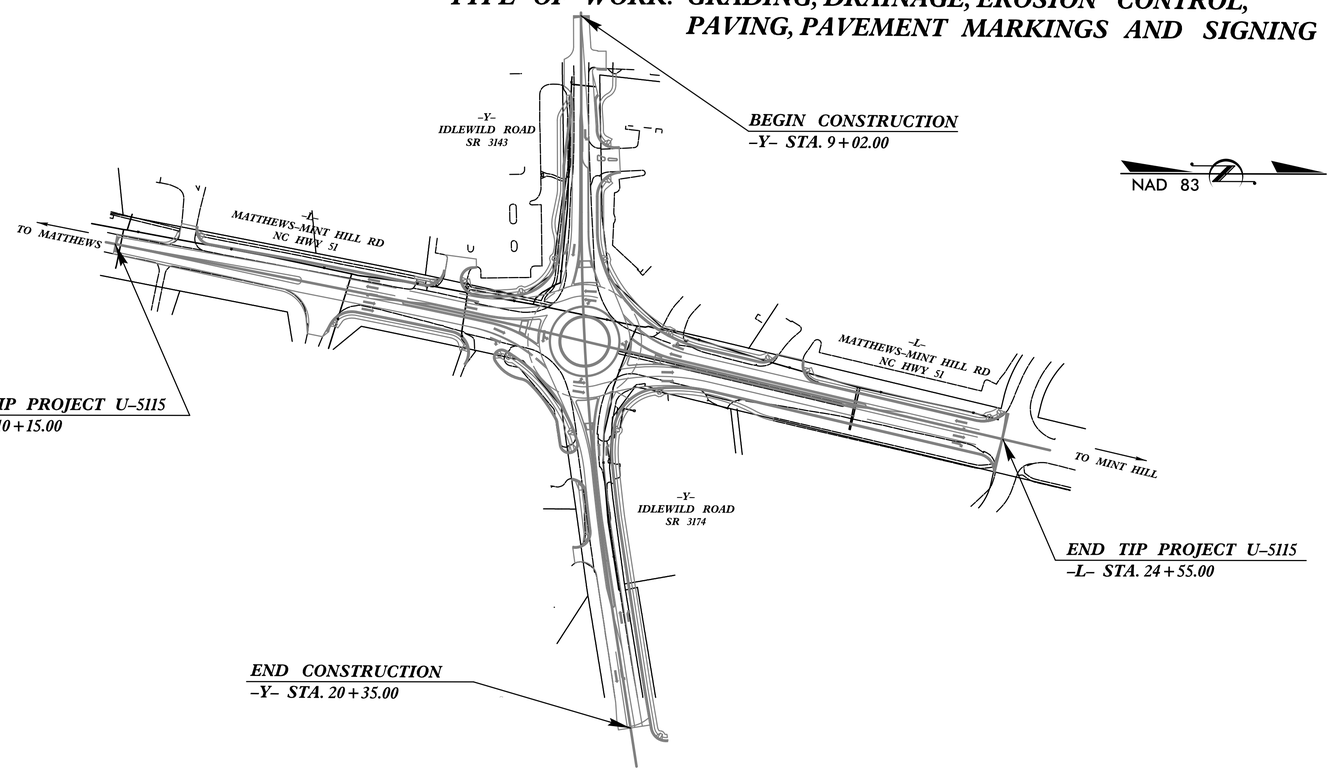

EROSION AND SEDIMENT CONTROL MEASURES

Std. #	Description	Symbol
1630.03	Temporary Silt Ditch	TSD
1630.05	Temporary Diversion	TD
1605.01	Temporary Silt Fence	
1606.01	Special Sediment Control Fence	
1622.01	Temporary Berms and Slope Drains	
1630.02	Silt Basin Type B	
1633.01	Temporary Rock Silt Check Type-A	
	Temporary Rock Silt Check Type-A with Matting and Polyacrylamide (PAM)	
1633.02	Temporary Rock Silt Check Type-B	
	Wattle / Coir Fiber Wattle	EW CFW
	Wattle / Coir Fiber Wattle with Polyacrylamide (PAM)	
1634.01	Temporary Rock Sediment Dam Type-A	
1634.02	Temporary Rock Sediment Dam Type-B	
1635.01	Rock Pipe Inlet Sediment Trap Type-A	
1635.02	Rock Pipe Inlet Sediment Trap Type-B	
1630.04	Stilling Basin	
1630.06	Special Stilling Basin	
	Rock Inlet Sediment Trap:	
1632.01	Type A	A
1632.02	Type B	B
1632.03	Type C	C
	Skimmer Basin	
	Tiered Skimmer Basin	
	Infiltration Basin	

THIS PROJECT CONTAINS EROSION CONTROL PLANS FOR CLEARING AND GRUBBING PHASE OF CONSTRUCTION.

RANA STANSELL, PE
LEVEL IIIA NAME

3597
LEVEL IIIA CERTIFICATION NO.

GRAPHIC SCALE

0 50
PLANS

0 50
PROFILE (HORIZONTAL)

0 5
PROFILE (VERTICAL)

ROADSIDE ENVIRONMENTAL UNIT
DIVISION OF HIGHWAYS
STATE OF NORTH CAROLINA

THESE EROSION AND SEDIMENT CONTROL PLANS COMPLY WITH THE REGULATIONS SET FORTH BY THE NCG–010000 GENERAL CONSTRUCTION PERMIT EFFECTIVE AUGUST 3, 2011 ISSUED BY THE NORTH CAROLINA DEPARTMENT OF ENVIRONMENT AND NATURAL RESOURCES DIVISION OF WATER QUALITY.

WSP | PARSONS BRINCKERHOFF
WSP | PARSONS BRINCKERHOFF
434 Fayetteville Street, Suite 1500 Raleigh, NC 27601
Tel. (919) 836–4040 www.wsp–pb.com
License No. F–0891

2012 STANDARD SPECIFICATIONS

Roadway Standard Drawings

The following roadway english standards as appear in "Roadway Standard Drawings"– Roadway Design Unit – N. C. Department of Transportation – Raleigh, N. C., dated January 2012 and the latest revison thereto are applicable to this project and by reference hereby are considered a part of these plans.

1604.01	Railroad Erosion Control Detail	1632.01	Rock Inlet Sediment Trap Type A
1605.01	Temporary Silt Fence	1632.02	Rock Inlet Sediment Trap Type B
1606.01	Special Sediment Control Fence	1632.03	Rock Inlet Sediment Trap Type C
1607.01	Gravel Construction Entrance	1633.01	Temporary Rock Silt Check Type A
1622.01	Temporary Berms and Slope Drains	1633.02	Temporary Rock Silt Check Type B
1630.01	Riser Basin	1634.01	Temporary Rock Sediment Dam Type A
1630.02	Silt Basin Type B	1634.02	Temporary Rock Sediment Dam Type B
1630.03	Temporary Silt Ditch	1635.01	Rock Pipe Inlet Sediment Trap Type A
1630.04	Stilling Basin	1635.02	Rock Pipe Inlet Sediment Trap Type B
1630.05	Temporary Diversion	1640.01	Coir Fiber Baffle
1630.06	Special Stilling Basin	1645.01	Temporary Stream Crossing
1631.01	Matting Installation		

U-5115_RAB_113201_EC01 11/23/2016 12:28:20 pm
J:\U5115\Hydraulics\CADD\EROSION CONTROL\U5115_EC_EC1_TSH.dgn

PROJECT REFERENCE NO.	SHEET NO.
U-5115	EC-2
R/W SHEET NO.	
ROADWAY DESIGN ENGINEER	HYDRAULICS ENGINEER

WATTLE DETAIL

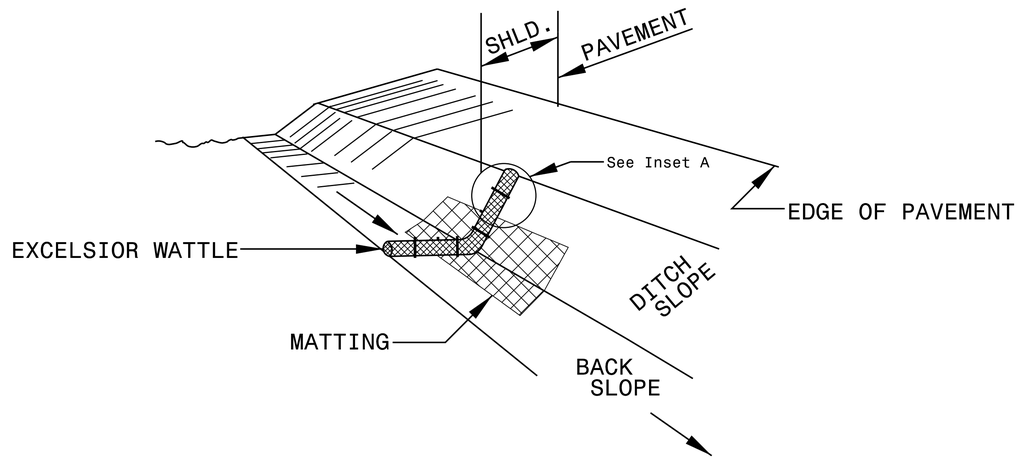

ISOMETRIC VIEW

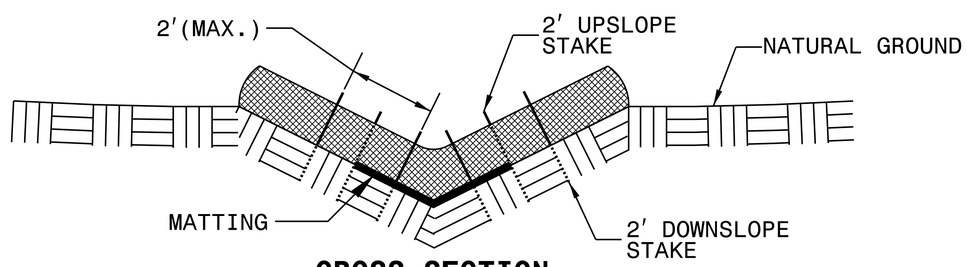

CROSS SECTION VEE DITCH

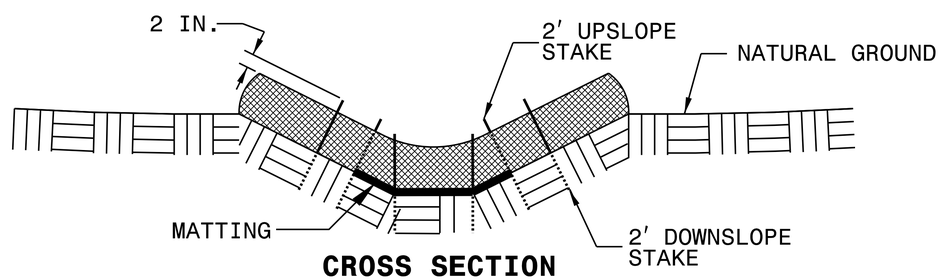

CROSS SECTION TRAPEZOIDAL DITCH

NOTES:

USE MINIMUM 12 IN. DIAMETER EXCELSIOR WATTLE.

USE 2 FT. WOODEN STAKES WITH A 2 IN. BY 2 IN. NOMINAL CROSS SECTION.

ONLY INSTALL WATTLE(S) TO A HEIGHT IN DITCH SO FLOW WILL NOT WASH AROUND WATTLE AND SCOUR DITCH SLOPES AND AS DIRECTED.

INSTALL A MINIMUM OF 2 UPSLOPE STAKES AND 4 DOWNSLOPE STAKES AT AN ANGLE TO WEDGE WATTLE TO BOTTOM OF DITCH.

PROVIDE STAPLES MADE OF 0.125 IN. DIAMETER STEEL WIRE FORMED INTO A U SHAPE NOT LESS THAN 12″ IN LENGTH.

INSTALL STAPLES APPROXIMATELY EVERY 1 LINEAR FOOT ON BOTH SIDES OF WATTLE AND AT EACH END TO SECURE IT TO THE SOIL.

INSTALL MATTING IN ACCORDANCE WITH SECTION 1631 OF THE STANDARD SPECIFICATIONS.

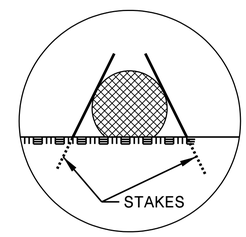

INSET A

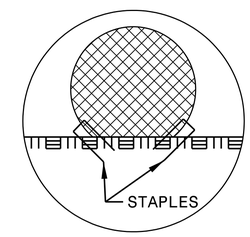

INSET B

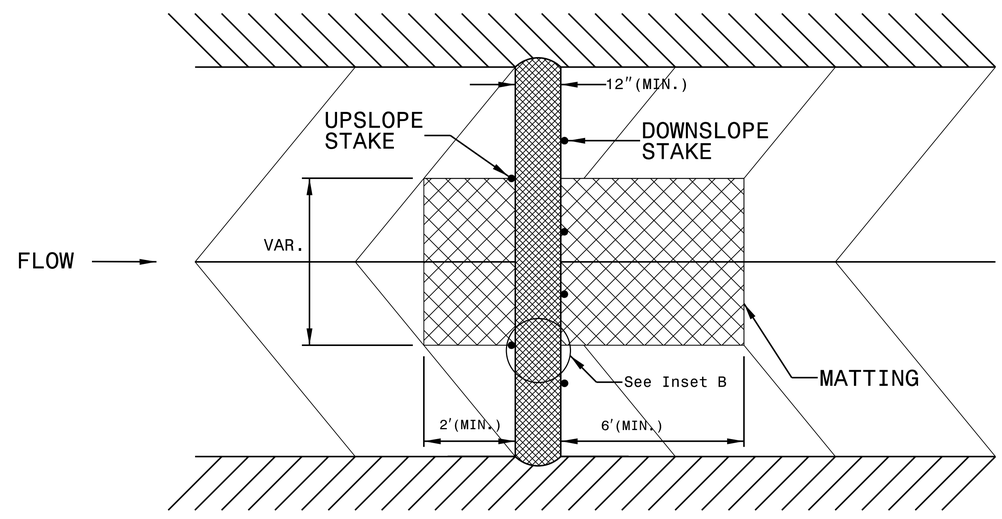

TOP VIEW

PROJECT REFERENCE NO.	SHEET NO.
U-5115	EC-3
ROADWAY DESIGN ENGINEER	HYDRAULICS ENGINEER

DIVISION OF HIGHWAYS
STATE OF NORTH CAROLINA

SOIL STABILIZATION TIMEFRAMES

SITE DESCRIPTION	STABILIZATION TIME	TIMEFRAME EXCEPTIONS
PERIMETER DIKES, SWALES, DITCHES AND SLOPES	7 DAYS	NONE
HIGH QUALITY WATER (HQW) ZONES	7 DAYS	NONE
SLOPES STEEPER THAN 3:1	7 DAYS	IF SLOPES ARE 10' OR LESS IN LENGTH AND ARE NOT STEEPER THAN 2:1, 14 DAYS ARE ALLOWED.
SLOPES 3:1 OR FLATTER	14 DAYS	7 DAYS FOR SLOPES GREATER THAN 50' IN LENGTH.
ALL OTHER AREAS WITH SLOPES FLATTER THAN 4:1	14 DAYS	NONE, EXCEPT FOR PERIMETERS AND HQW ZONES.

PROJECT REFERENCE NO.	SHEET NO.
U-5115	EC-4/CONST.4
R/W SHEET NO.	
ROADWAY DESIGN ENGINEER	HYDRAULICS ENGINEER

NAD 83

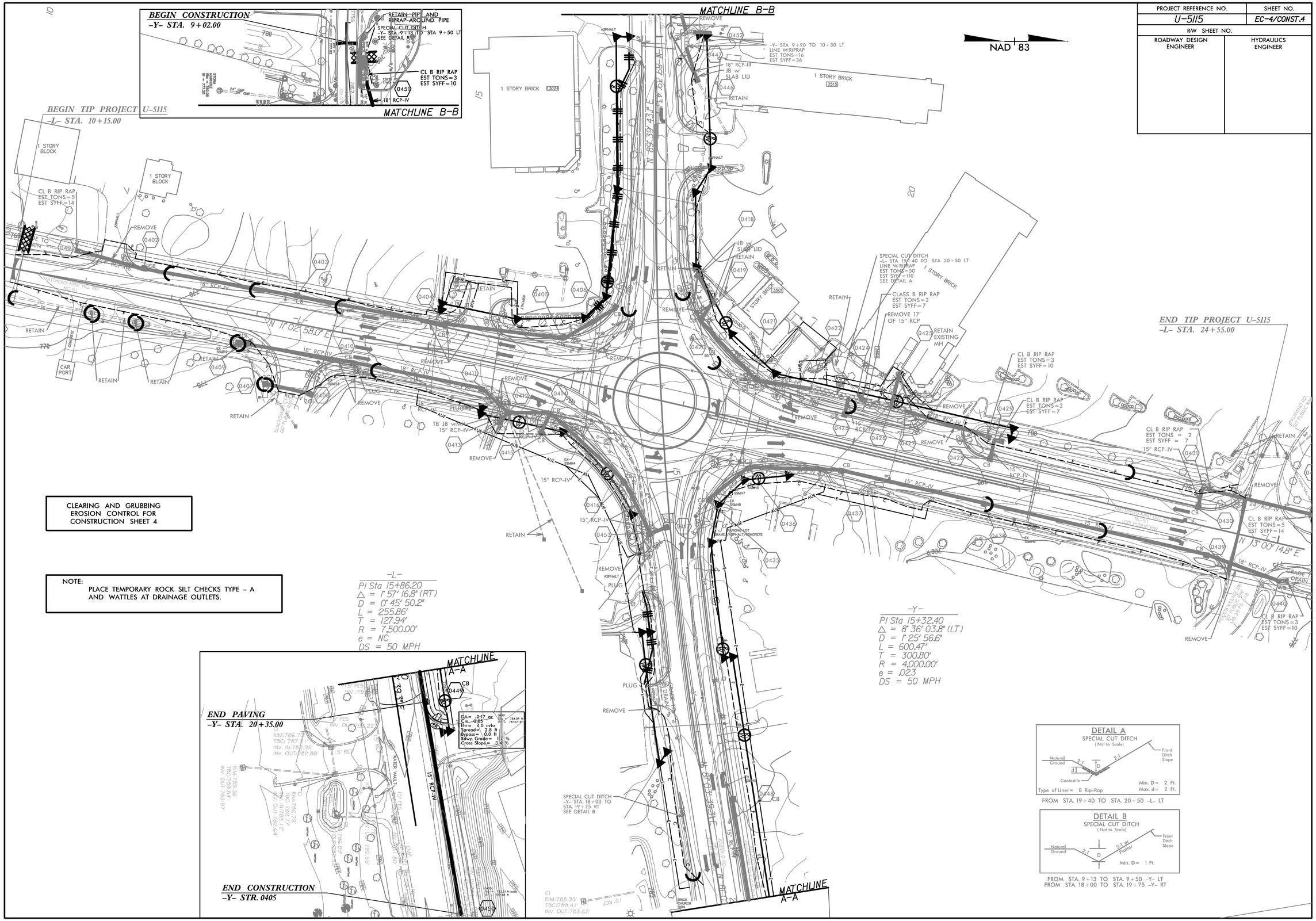

CLEARING AND GRUBBING
EROSION CONTROL FOR
CONSTRUCTION SHEET 4

NOTE:
PLACE TEMPORARY ROCK SILT CHECKS TYPE – A AND WATTLES AT DRAINAGE OUTLETS.

FROM STA. 19+40 TO STA. 20+50 -L- LT

FROM STA. 9+13 TO STA. 9+50 -Y- LT
FROM STA. 18+00 TO STA. 19+75 -Y- RT

PROJECT REFERENCE NO.	SHEET NO.
U-5115	EC-4/CONST.4
R/W SHEET NO.	
ROADWAY DESIGN ENGINEER	HYDRAULICS ENGINEER

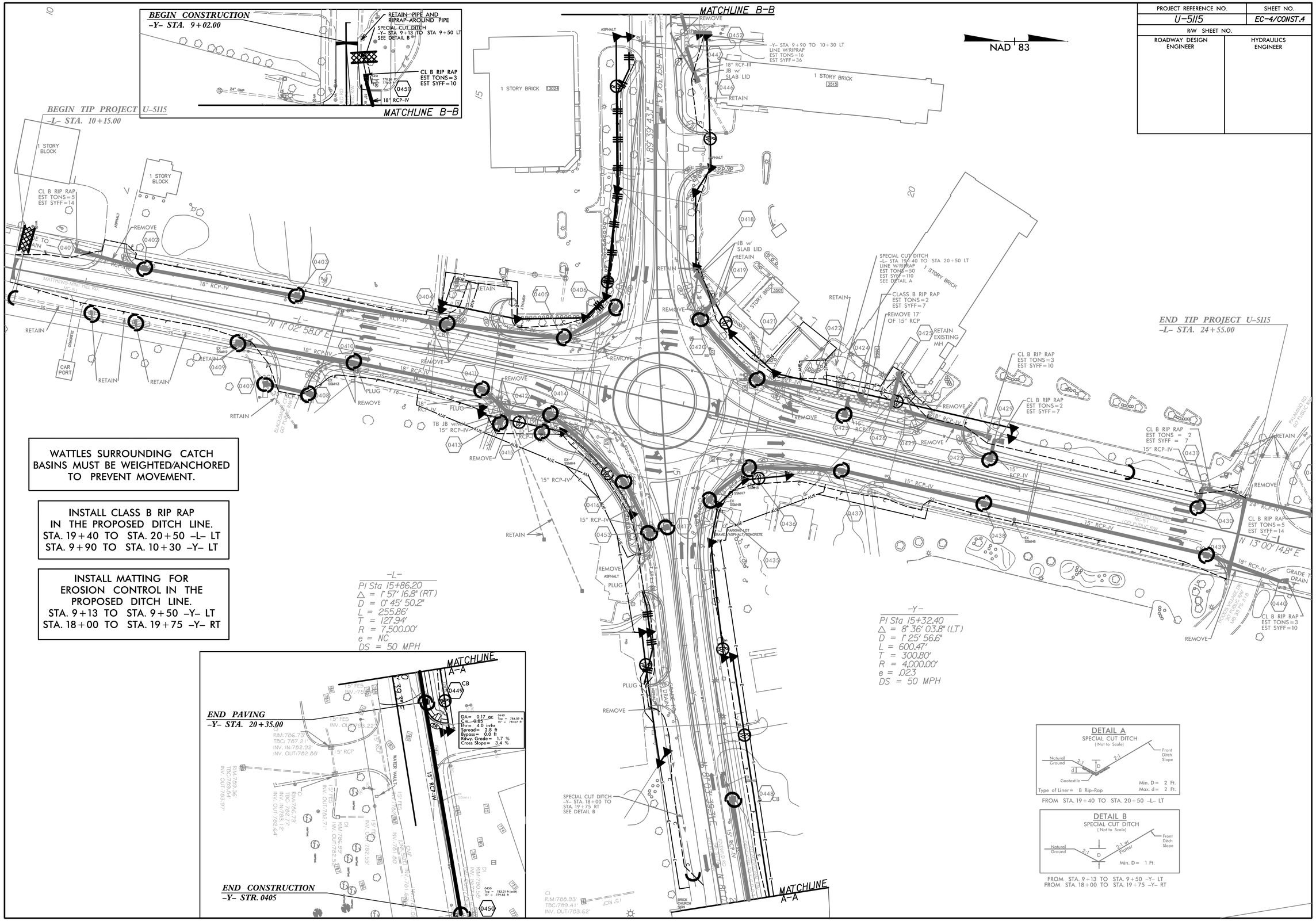

DocuSign Envelope ID: 55E06D70-7789-40A3-900F-62D1EADCB546

PROJ. REFERENCE NO.	SHEET NO.
U-5115	SIGN-1

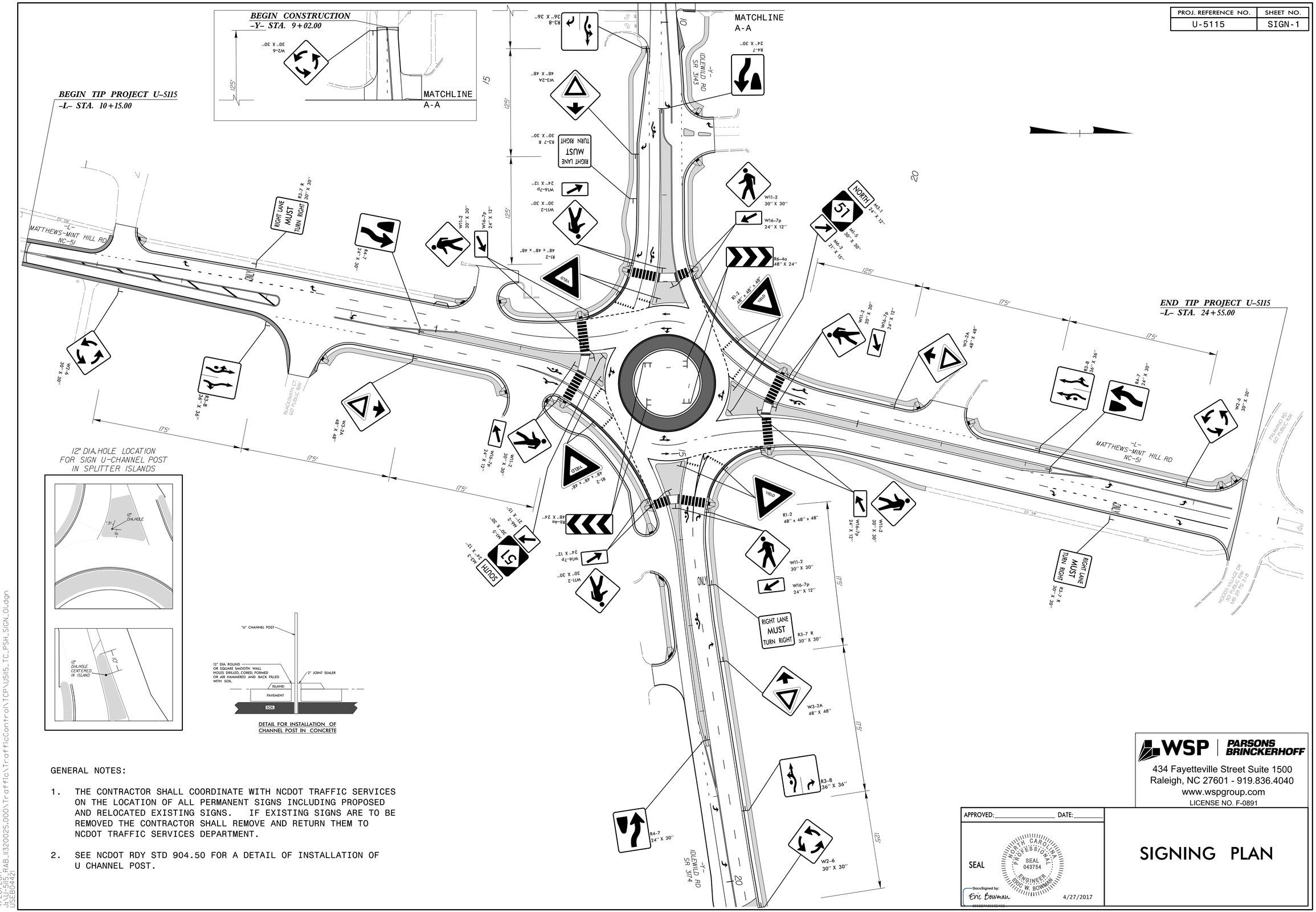

GENERAL NOTES:

1. THE CONTRACTOR SHALL COORDINATE WITH NCDOT TRAFFIC SERVICES ON THE LOCATION OF ALL PERMANENT SIGNS INCLUDING PROPOSED AND RELOCATED EXISTING SIGNS. IF EXISTING SIGNS ARE TO BE REMOVED THE CONTRACTOR SHALL REMOVE AND RETURN THEM TO NCDOT TRAFFIC SERVICES DEPARTMENT.

2. SEE NCDOT RDY STD 904.50 FOR A DETAIL OF INSTALLATION OF U CHANNEL POST.

WSP | PARSONS BRINCKERHOFF
434 Fayetteville Street Suite 1500
Raleigh, NC 27601 - 919.836.4040
www.wspgroup.com
LICENSE NO. F-0891

APPROVED:_____ DATE:_____

SEAL

NORTH CAROLINA PROFESSIONAL SEAL 043754 ENGINEER ERIC W. BOWMAN

DocuSigned by: Eric Bowman
4/27/2017

SIGNING PLAN

4/26/2017
J:\U-5115_RAB_II320025.000\Traffic\TrafficControl\TCP\U5115_TC_PSH_SIGN_01.dgn
USER0442

0 5 10	PROJ. REFERENCE NO.	SHEET NO.
	U-5115	X-1

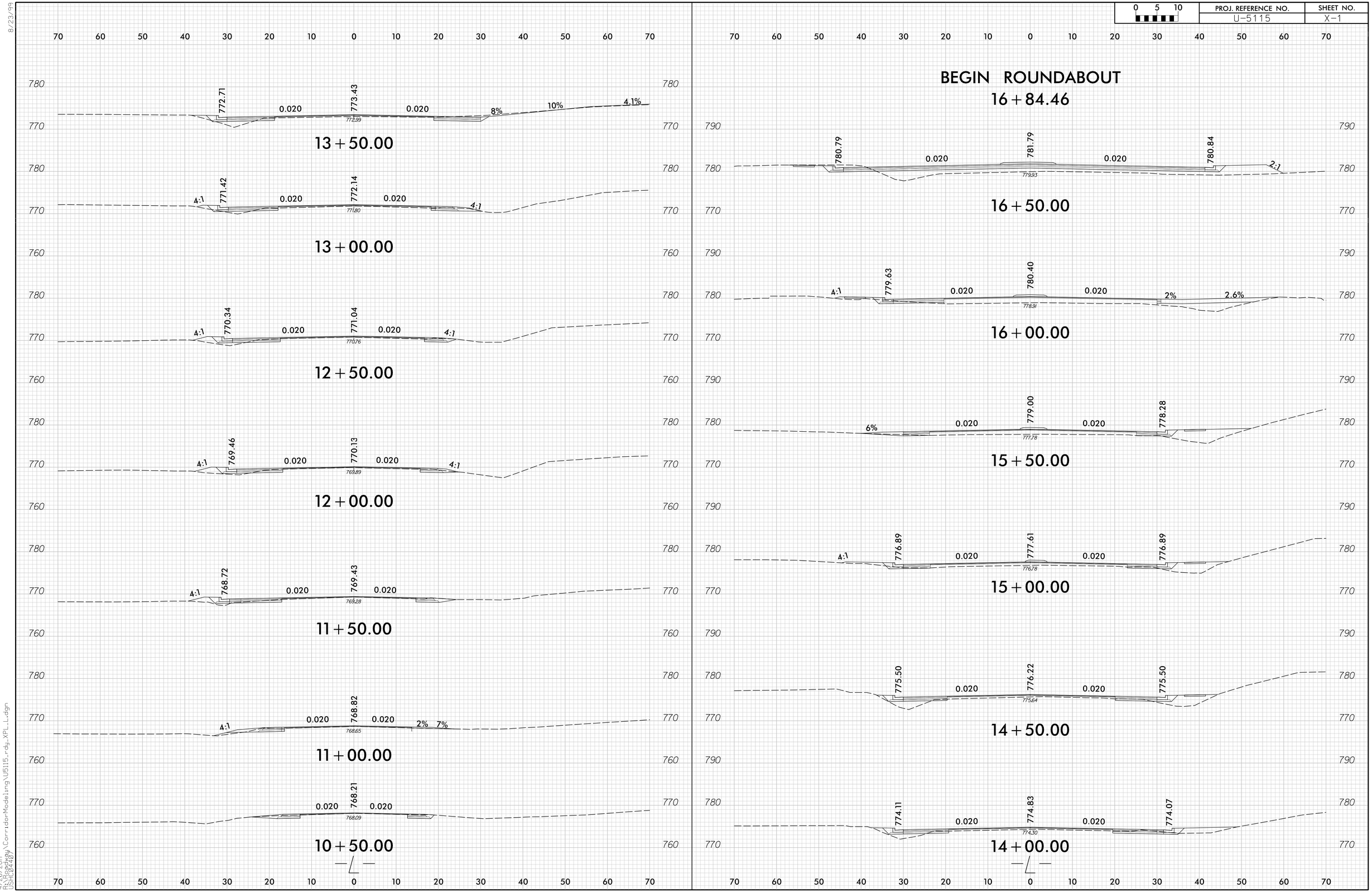

8/23/99

4/26/2017
R:\Projects\Roadway\CorridorModeling\U5115_rdy_XPL_L.dgn
USHC04407

0 5 10	PROJ. REFERENCE NO.	SHEET NO.
	U-5115	X-2

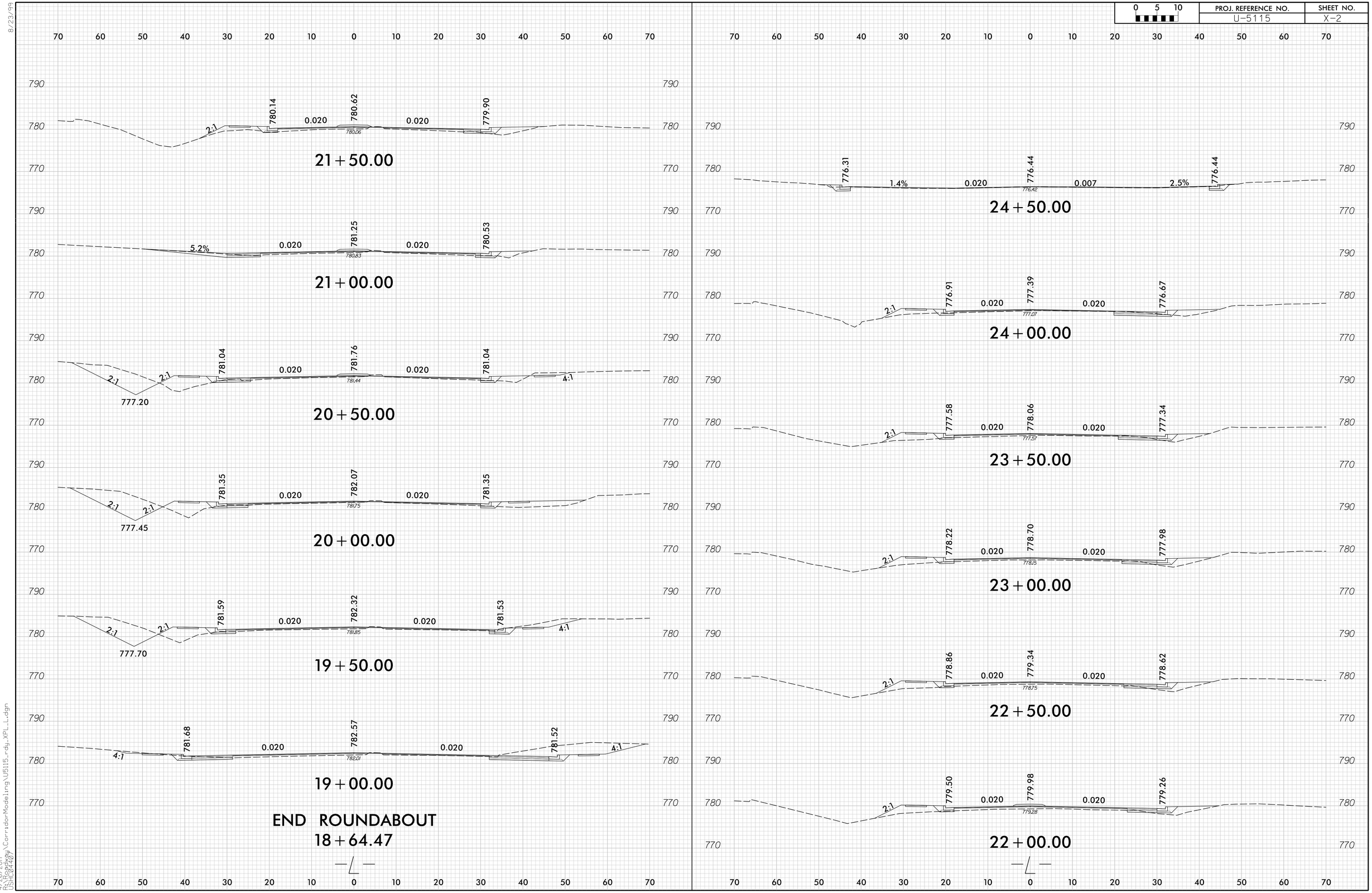

8/23/99

4/26/2017
R:\Corridor\CorridorModeling\U5115_rdy_XPL_L.dgn
USHC04407

0 5 10	PROJ. REFERENCE NO.	SHEET NO.
	U-5115	X-3

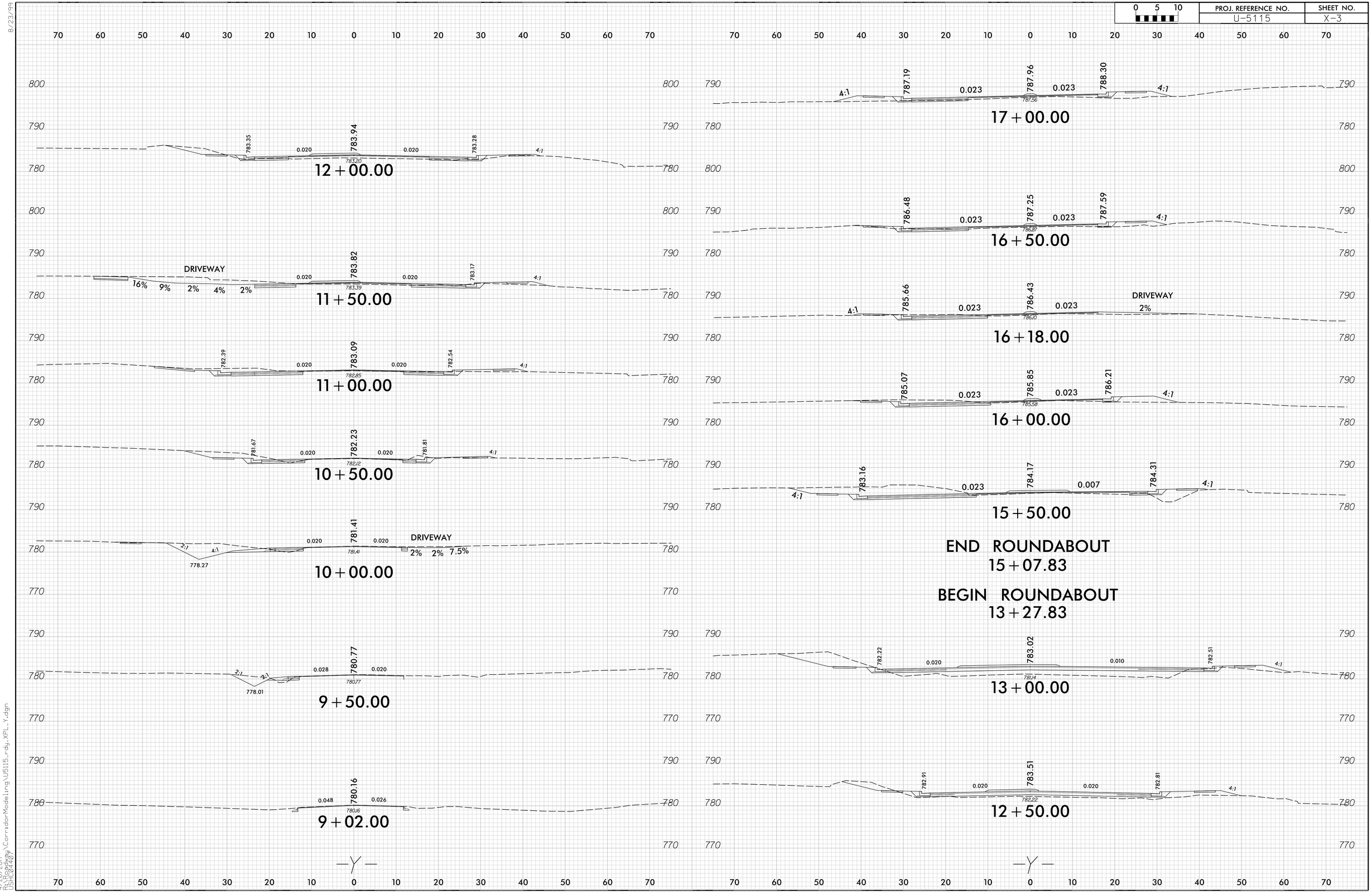

8/23/99

4/26/2017
R:\Scripts\ru\CorridorModeling\U5115_rdy_XPL_Y.dgn
USHC04407

0 5 10	PROJ. REFERENCE NO.	SHEET NO.
	U-5115	X-4

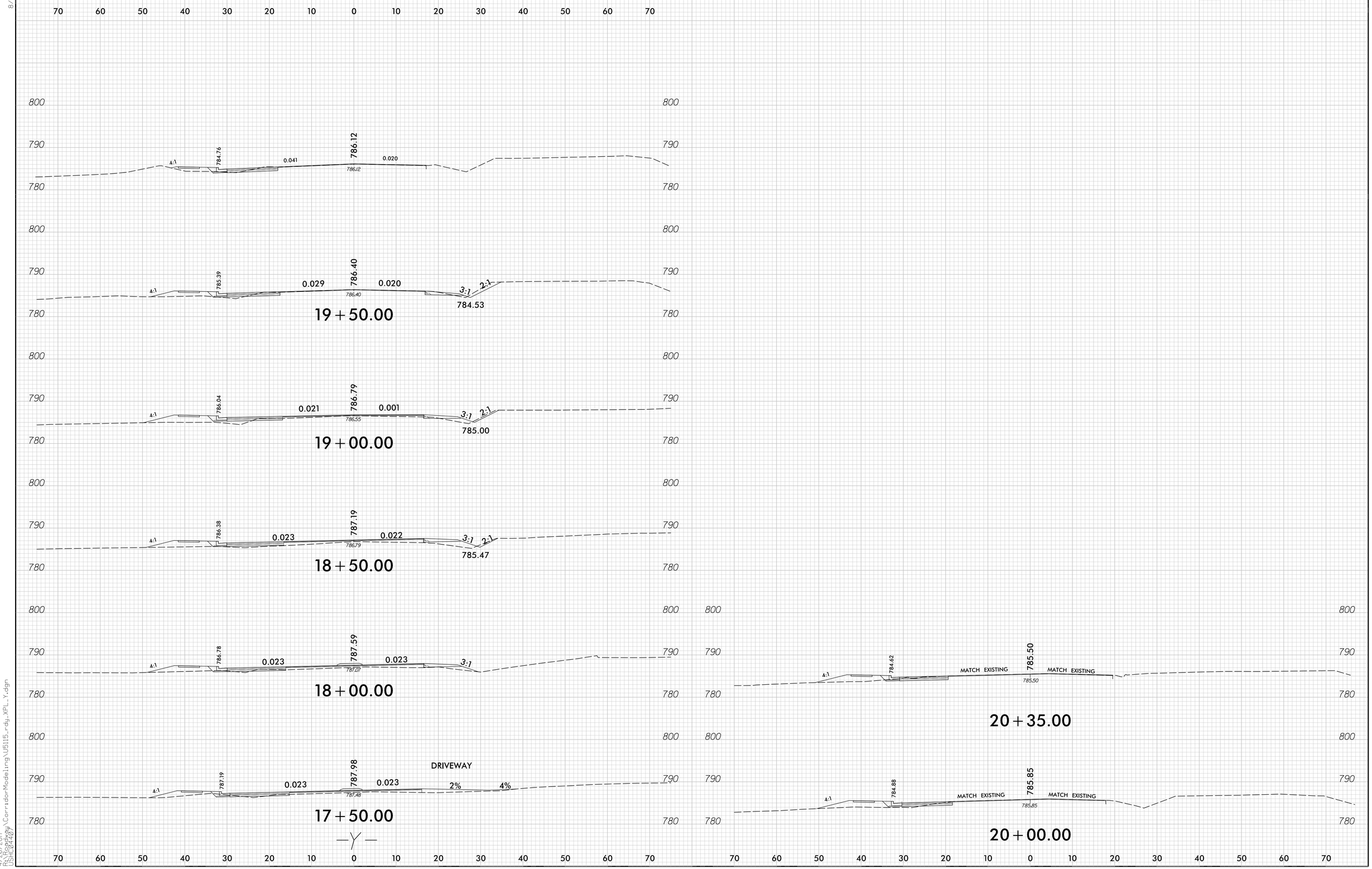

8/23/99

4/26/2017
R:\Corridor Modeling\U5115_rdy_XPL_Y.dgn
USHC04401