PROJECT: 44856.3.10 TIP: W-5710J

STATE	STATE PROJECT REFERENCE NO.	SHEET NO.	TOTAL SHEETS
N.C.	44856.3.10	1	

STATE PROJ. NO.	F.A. PROJ. NO.	DESCRIPTION
44856.1.10	HSIP-1004(065)	*P.E.*
44856.2.10	HSIP-1004(065)	*R/W*
44856.3.10	HSIP-1004(065)	*CONST.*

STATE OF NORTH CAROLINA
DIVISION OF HIGHWAYS
UNION COUNTY

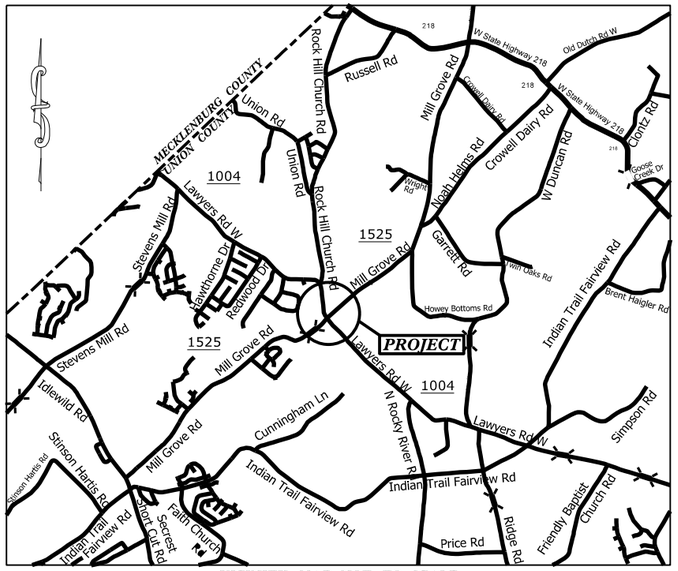

VICINITY MAP NOT TO SCALE

LOCATION: ***INTERSECTION OF LAWYERS RD. (SR-1004) AND MILL GROVE RD. (SR-1525)***

TYPE OF WORK: ***GRADING, DRAINAGE, MILLING, PAVEMENT REMOVAL, PAVING, MONOLITHIC CONCRETE ISLANDS, AND THERMOPLASTIC PAVEMENT MARKINGS.***

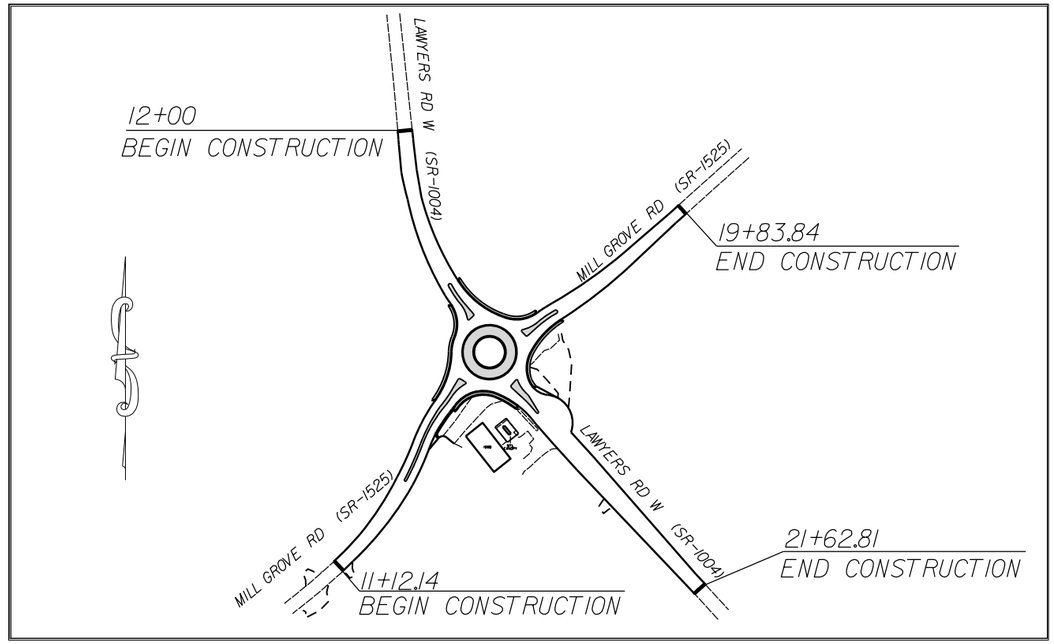

CLEARING ON THIS PROJECT SHALL BE TO THE LIMITS ESTABLISHED BY METHOD III AS DESCRIBED IN THE NCDOT STANDARD DRAWINGS

GRAPHIC SCALES

0 50 100
PLANS

0 50 100
PROFILE (HORIZONTAL)

0 5 10
PROFILE (VERTICAL)

DESIGN DATA

ADT =
ADT =
DHV = %
D = %
T = %
V = MPH

PROJECT LENGTH

LENGTH OF ROADWAY PROJECT	*44856.3.10*	= *0.35*	*MILES*
TOTAL LENGTH OF STATE PROJECT	*44856.3.10*	= *0.35*	*MILES*

Prepared In the Office of:
DIVISION OF HIGHWAYS
DIVISION TEN
DIVISION DESIGN / CONSTRUCT UNIT

2018 STANDARD SPECIFICATIONS

RIGHT OF WAY DATE:
MARCH 03, 2022

LETTING DATE:
AUGUST 3, 2022

DONALD HARWARD
PROJECT ENGINEER

JASON BROOKS
PROJECT DESIGN ENGINEER

ROADWAY DESIGN ENGINEER

NORTH CAROLINA PROFESSIONAL SEAL 034357 ENGINEER SEAN MICHAEL EPPERSON

DocuSigned by:
A92E75CC0FFB43B...

SIGNATURE

27-JUN-2022 11:03
S:\DDC\RDY\union\W-5710J_Lowyers_Mill Gr
$$$$USERNAME$$$$

SURVEY CONTROL SHEET

PROJECT NO.	SHEET NO.
44856.3.10	1A
F.A. PROJECT NO. HSIP-1004(065)	

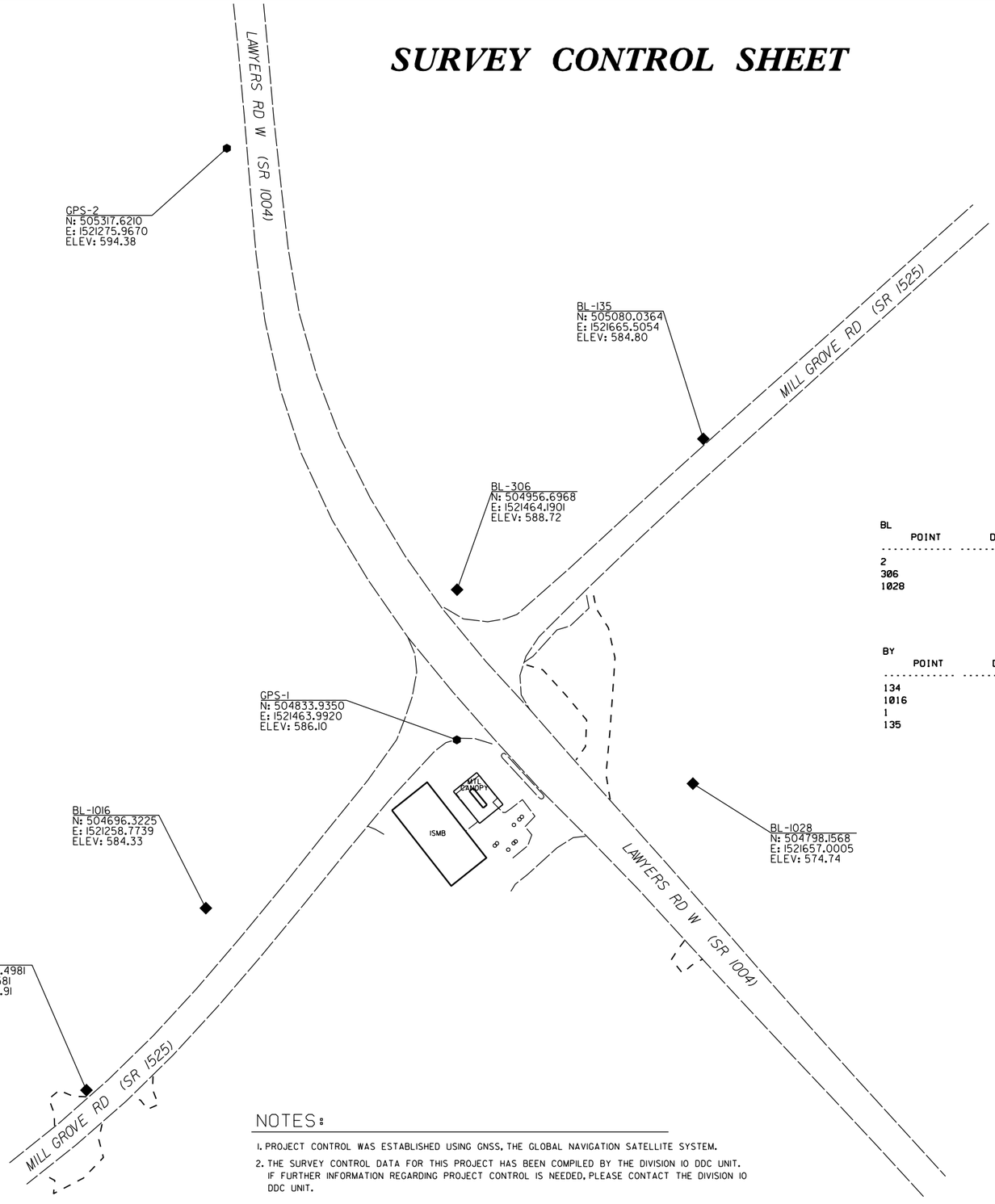

NC GRID
NAD 83 NA 2011

BL

POINT	DESC.	NORTH	EAST	ELEVATION	L STATION	OFFSET
2		505317.6210	1521275.9670	594.38	11+83.97	28.61 RT
306		504956.6968	1521464.1901	588.72	15+91.53	28.93 LT
1028		504798.1568	1521657.0005	574.74	18+45.16	76.07 LT

BY

POINT	DESC.	NORTH	EAST	ELEVATION	Y STATION	OFFSET
134		504547.4981	1521161.1581	584.91	10+87.19	16.92 LT
1016		504696.3225	1521258.7739	584.33	12+73.45	39.81 LT
1		504833.9350	1521463.9920	586.10	15+10.59	66.62 RT
135		505080.0364	1521665.5054	584.80	18+36.25	14.39 LT

NOTES:

1. PROJECT CONTROL WAS ESTABLISHED USING GNSS, THE GLOBAL NAVIGATION SATELLITE SYSTEM.
2. THE SURVEY CONTROL DATA FOR THIS PROJECT HAS BEEN COMPILED BY THE DIVISION 10 DDC UNIT. IF FURTHER INFORMATION REGARDING PROJECT CONTROL IS NEEDED, PLEASE CONTACT THE DIVISION 10 DDC UNIT.

ROUNDABOUT AT THE INTERSECTION OF
LAWYERS RD.(SR-1004) AND
MILL GROVE RD.(SR-1525)

		REVISIONS	
SCALE	N/A		
DATE	9-2020		
DWG. BY	JCB		
DESIGN BY	JCB		
APPROVED	JDH		

PROJECT NO.	SHEET NO.
44856.3.10	1B
F.A. PROJECT NO.	HSIP-1004(065)

RIGHT OF WAY, EASEMENT AND PROPOSED ALIGNMENT SHEET

L

TYPE	STATION	NORTH	EAST
POT	10+00.00	505503.4632	1521287.2378
PC	12+44.29	505260.2460	1521310.0940
PT	14+79.19	505038.6342	1521382.0760
POT	16+15.83	504921.0516	1521451.6700
PC	17+61.45	504809.3852	1521545.1310
PT	18+08.56	504773.9153	1521576.1335
POT	22+21.58	504468.8288	1521854.5412

Y

TYPE	STATION	NORTH	EAST
PC	10+00.00	504479.3526	1521105.2729
PCC	11+37.14	504569.0726	1521208.8793
PRC	13+70.10	504762.8797	1521334.7749
PT	14+60.31	504839.9294	1521380.7493
POT	15+68.07	504921.0516	1521451.6700
PC	17+07.79	504993.7534	1521570.9862
PRC	18+58.84	505084.0300	1521691.8190
PT	21+28.29	505263.9132	1521892.4250

ROW MARKER IRON PIN AND CAP

ALIGN	STATION	OFFSET	NORTH	EAST
L	14+06.00	-20.43	505111.8799	1521368.0663
L	15+18.00	-35.00	505023.0665	1521431.9612
L	15+35.00	40.61	504969.9278	1521375.5570
L	15+61.00	-60.00	504998.7959	1521475.3771
L	16+87.00	-38.55	504891.2167	1521526.9120
L	17+02.00	41.32	504828.4540	1521475.2943
L	17+35.00	29.43	504810.7743	1521505.5866
L	17+71.00	-56.00	504838.3993	1521593.9246
L	18+60.00	-25.54	504753.1310	1521629.6719

ROW MARKER IRON PIN AND CAP

ALIGN	STATION	OFFSET	NORTH	EAST
Y	12+30.52	-17.68	504650.2429	1521255.0607
Y	12+32.26	-30.00	504658.7311	1521245.9817
Y	14+00.00	-30.00	504803.9729	1521320.2374
Y	14+92.00	-43.00	504892.0865	1521369.2318
Y	16+72.00	-30.00	505000.7510	1521524.8155
Y	18+53.00	-19.64	505094.7707	1521674.3977

PERMANENT DRAINAGE EASEMENT

ALIGN	STATION	OFFSET	NORTH	EAST
Y	12+74.00	44.00	504653.8258	1521331.0166
Y	12+78.00	32.10	504663.5736	1521322.9536
Y	12+83.00	47.00	504660.7418	1521338.5390
Y	12+88.00	33.86	504671.9086	1521329.7632
Y	12+98.00	-35.07	504713.8416	1521274.1573
Y	12+99.00	-39.00	504716.5167	1521271.1348
Y	13+09.00	-35.17	504722.9907	1521278.8348
Y	13+09.00	-36.00	504723.3663	1521278.0993
Y	17+63.00	-40.00	505056.7282	1521593.9882
Y	17+63.00	-47.00	505062.4405	1521589.9423
Y	17+68.00	27.67	505004.5125	1521637.3104
Y	17+68.00	43.00	504992.0551	1521646.2512
Y	17+74.00	-38.08	505061.2774	1521603.6036
Y	17+74.00	-47.00	505068.4828	1521598.3500
Y	17+78.00	42.00	504999.0577	1521654.1802
Y	17+78.00	26.55	505011.4932	1521645.0175

PERMANENT UTILITY EASEMENT

ALIGN	STATION	OFFSET	NORTH	EAST
L	13+81.00	-21.38	505134.5878	1521360.1862
L	14+73.00	-47.00	505067.4505	1521419.6740
L	15+03.00	40.32	504997.6129	1521359.5064
L	15+43.00	-80.00	505024.4729	1521483.4201
L	17+61.00	-81.00	504861.7151	1521606.9596
L	18+95.00	-44.00	504739.7232	1521666.9025
L	19+10.00	-25.05	504715.8726	1521663.0192

PERMANENT UTILITY EASEMENT

ALIGN	STATION	OFFSET	NORTH	EAST
Y	12+33.12	-35.81	504662.7436	1521241.7022
Y	12+41.00	27.38	504633.1109	1521298.0609
Y	12+41.00	50.00	504620.3448	1521316.7302
Y	12+46.00	27.86	504637.1980	1521301.4049
Y	12+46.00	50.00	504624.8738	1521319.7960
Y	14+71.00	-60.00	504887.4656	1521342.6113
Y	16+53.00	-40.57	504999.8919	1521503.0898
Y	16+62.00	45.96	504930.6841	1521555.7986

I, Barry D. Davis, a Professional Land Surveyor in the sate of North Carolina hereby certify to the best of my knowledge and belief that the following work item, R/W and Easement Staking, was performed under my responsible charge meeting NCDOT Survey Standards as directed in the NCDOT Location & Surveys guidelines and procedures as of 2017. Those standards can be found at https://connect.ncdot.gov/resources/Location/Pages/.

I further certify that the right of way and permanent easement points shown herein and outlined in the tables shown hereon (localized coordinates, station/offset) have been checked and are accurate representations of the right of way and permanent easement points depicted on the corresponding highway plans. I also certify that the right of way and permanent easement points shown herein have been field monumented under my supervision from survey control established under my supervision; that the depicted property data shown herein were surveyed under my supervision; and these monuments denote the right of way and easement boundaries at the time of staking which may be subject to change due to right of way revisions (see deeds for final determination)

Witness my signature, registration number and seal this 17th day of Nov 2021

Barry D. Davis, _____ DocuSigned by: _____ PLS® L-4384
Professional Land Surveyor

Barry Davis
0E2AAE4F48174DC...

NORTH CAROLINA PROFESSIONAL SEAL L-4384 LAND SURVEYOR BARRY D. DAVIS

NOTES:

1. PROJECT CONTROL WAS ESTABLISHED USING GNSS, THE GLOBAL NAVIGATION SATELLITE SYSTEM.
2. THE SURVEY CONTROL DATA FOR THIS PROJECT HAS BEEN COMPILED BY THE DIVISION 10 DDC UNIT. IF FURTHER INFORMATION REGARDING PROJECT CONTROL IS NEEDED, PLEASE CONTACT THE DIVISION 10 DDC UNIT.

ROUNDABOUT AT THE INTERSECTION OF LAWYERS RD.(SR-1004) AND MILL GROVE RD.(SR-1525)

		REVISIONS	
SCALE	N/A		
DATE	4-2021		
DWG. BY	JCB		
DESIGN BY	JCB		
APPROVED	JDH		

PROJECT NO.	SHEET NO.
44856.3.10	1C
F.A. PROJECT NO. HSIP-1004(065)	

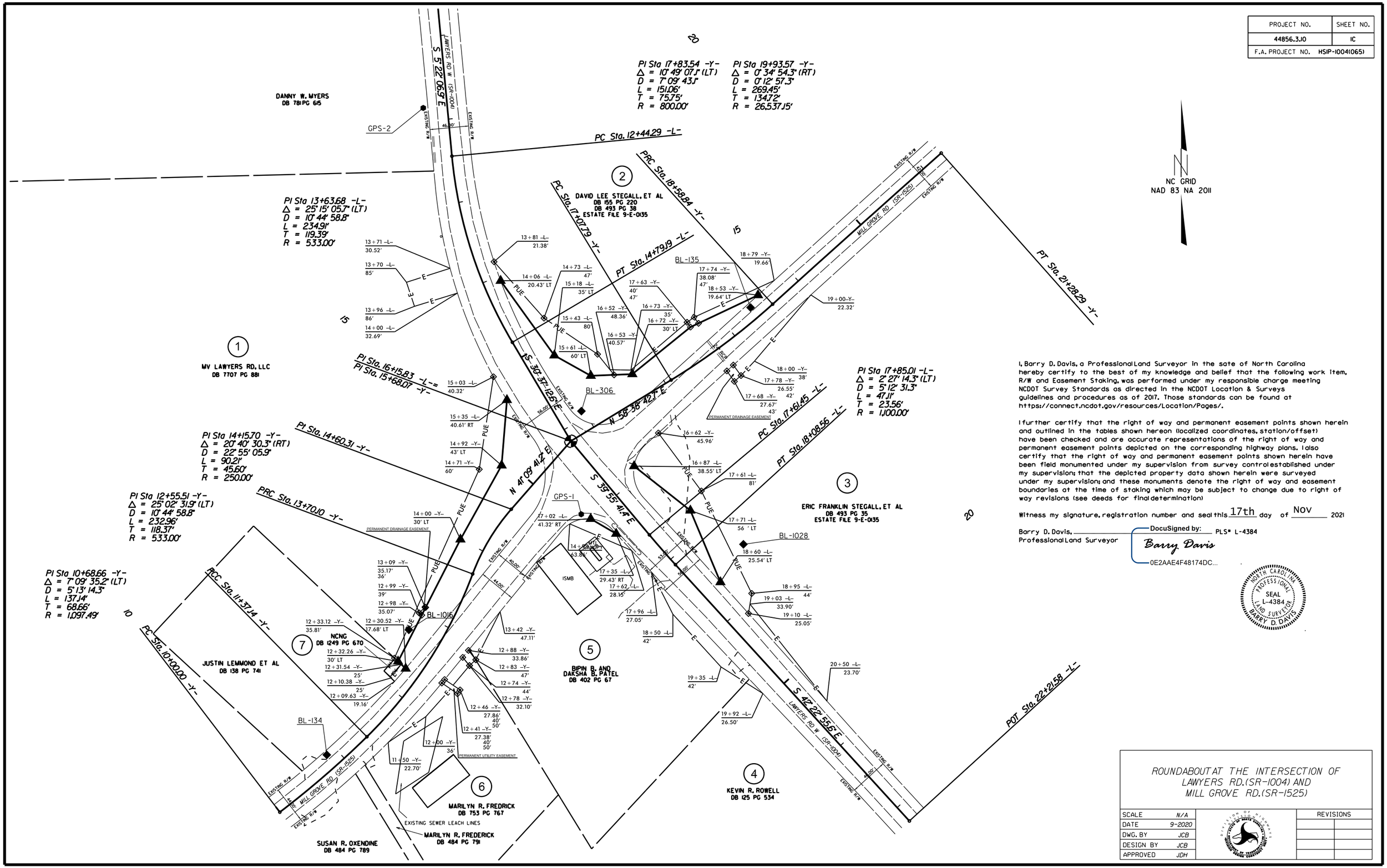

I, Barry D. Davis, a Professional Land Surveyor in the sate of North Carolina hereby certify to the best of my knowledge and belief that the following work item, R/W and Easement Staking, was performed under my responsible charge meeting NCDOT Survey Standards as directed in the NCDOT Location & Surveys guidelines and procedures as of 2017. Those standards can be found at https://connect.ncdot.gov/resources/Location/Pages/.

I further certify that the right of way and permanent easement points shown herein and outlined in the tables shown hereon (localized coordinates, station/offset) have been checked and are accurate representations of the right of way and permanent easement points depicted on the corresponding highway plans. I also certify that the right of way and permanent easement points shown herein have been field monumented under my supervision from survey control established under my supervision; that the depicted property data shown herein were surveyed under my supervision; and these monuments denote the right of way and easement boundaries at the time of staking which may be subject to change due to right of way revisions (see deeds for final determination)

Witness my signature, registration number and seal this 17th day of Nov 2021

Barry D. Davis, Professional Land Surveyor

DocuSigned by: Barry Davis 0E2AAE4F48174DC...

PLS# L-4384

NORTH CAROLINA PROFESSIONAL LAND SURVEYOR SEAL L-4384 BARRY D. DAVIS

ROUNDABOUT AT THE INTERSECTION OF LAWYERS RD. (SR-1004) AND MILL GROVE RD. (SR-1525)

SCALE	N/A	
DATE	9-2020	
DWG. BY	JCB	
DESIGN BY	JCB	
APPROVED	JDH	

DIVISION OF HIGHWAYS — STATE OF NORTH CAROLINA — DEPARTMENT OF TRANSPORTATION

REVISIONS	

PROJECT NO.	SHEET NO.
44856.3.10	2
F.A. PROJECT NO. HSIP-1004(065)	

ROADWAY DESIGN ENGINEER

SEAL 33137

DocuSigned by:

A92E75CC0FFB43E...

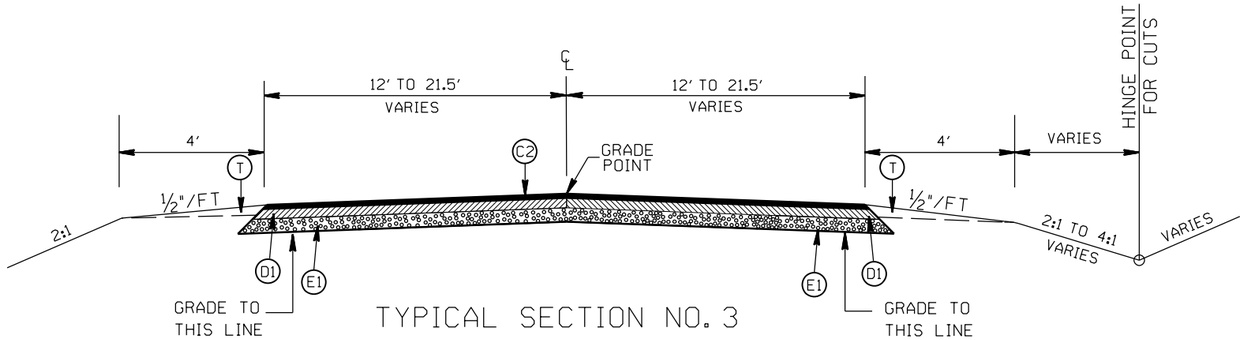

TYPICAL SECTION NO. 3

STA. 14+00.00 TO 14+79.19 -L-

STA. 12+50.00 TO 13+00.00 -Y-

STA. 17+04.70 TO 18+50.00 -Y-

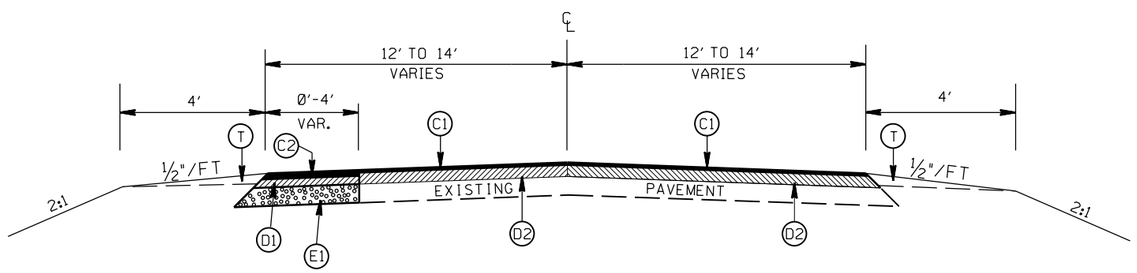

TYPICAL SECTION NO. 2

STA. 13+19.85 TO 14+00.00 -L-

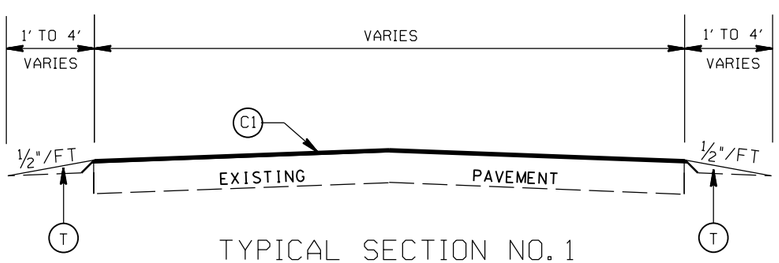

TYPICAL SECTION NO. 1

STA. 12+00.00 TO 13+19.85 -L-

STA. 21+37.81 TO 21+62.81 -L-

STA. 11+12.14 TO 11+37.14 -Y-

STA. 19+58.84 TO 19+83.84 -Y-

NOTES:

-UTILIZE WELDED WIRE MESH (EITHER 4X4 W3.5XW3.5 OR 6X6 W5XW5) IN PROP. 7" TRUCK MOUNTABLE CONC. ISLAND (R3,R6).

-OVERLAP WELDED WIRE MESH PANELS 4".

PAVEMENT SCHEDULE

C1	PROP. APPROX. 1½" ASPHALT CONC. SURFACE COURSE, TYPE S9.5B, AT AN AVERAGE RATE OF 168 LBS. PER SQ. YD.
C2	PROP. APPROX. 3" ASPHALT CONC. SURFACE COURSE, TYPE S9.5B, AT AN AVERAGE RATE OF 168 LBS. PER SQ. YD. IN EACH OF TWO LAYERS.
D1	PROP. APPROX. 4" ASPHALT CONC. INTERMEDIATE COURSE, TYPE I19.0C, AT AN AVERAGE RATE OF 456 LBS. PER SQ. YD.
D2	PROP. VARIABLE DEPTH ASPHALT CONC. INTERMEDIATE COURSE.
E1	PROP. APPROX. 5" ASPHALT CONC. BASE COURSE, TYPE B25.0C, AT AN AVERAGE RATE OF 570 LBS. PER SQ. YD.
E2	PROP. VARIABLE DEPTH ASPHALT CONC. BASE COURSE
R1	PROP. 2'-6" CONC. CURB & GUTTER
R2	PROP. 1'-6" CONC. CURB & GUTTER, CLASS AA CONCRETE
R3	PROP. 7" TRUCK MOUNTABLE CONC. ISLAND, CLASS AA CONCRETE
R4	PROP. 5" MONOLITHIC CONC. ISLAND (SURFACE MOUNTED)
R5	PROP. 1'-6" CONC. CURB & GUTTER, CLASS AA CONCRETE (BLACK TINT)
R6	PROP. 7" TRUCK MOUNTABLE CONC. ISLAND, CLASS AA CONCRETE (BLACK TINT)
R7	PROP. MODIFIED SHOULDER BERM GUTTER (SEE DETAIL SHEET 2H)
T	EARTH MATERIAL
J	PROP. 6" ABC STONE

ROUNDABOUT AT THE INTERSECTION OF LAWYERS RD.(SR-1004) AND MILL GROVE RD.(SR-1525)

SCALE	N/A
DATE	9-2020
DWG. BY	DLS
DESIGN BY	JCB
APPROVED	JDH

REVISIONS

PROJECT NO.	SHEET NO.
44856.3.10	2A
F.A. PROJECT NO. HSIP-1004(065)	

ROADWAY DESIGN ENGINEER

NORTH CAROLINA PROFESSIONAL SEAL 034357 ENGINEER MICHAEL EPPERS

DocuSigned by:

A92E75CC0FFB43B...

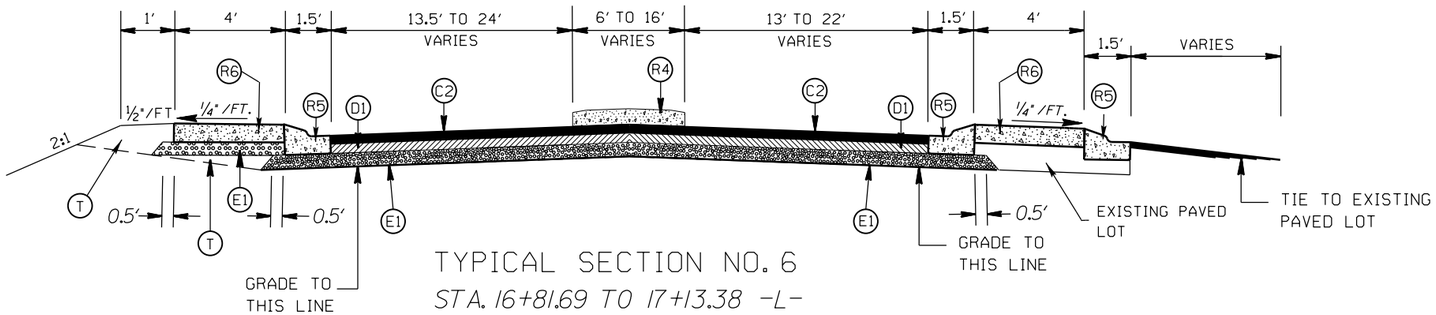

TYPICAL SECTION NO. 6

STA. 16+81.69 TO 17+13.38 -L-

STA. 14+50.75 TO 15+02.14 -Y-

NOTES:

-UTILIZE WELDED WIRE MESH (EITHER 4X4 W3.5XW3.5 OR 6X6 W5XW5) IN PROP. 7" TRUCK MOUNTABLE CONC. ISLAND (R3, R6).

-OVERLAP WELDED WIRE MESH PANELS 4".

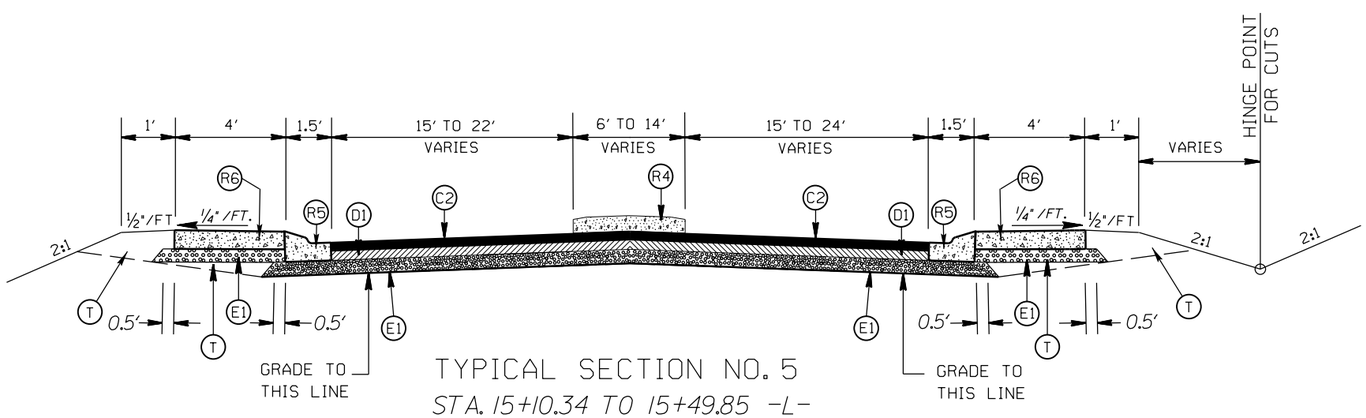

TYPICAL SECTION NO. 5

STA. 15+10.34 TO 15+49.85 -L-

STA. 16+34.05 TO 16+73.55 -Y-

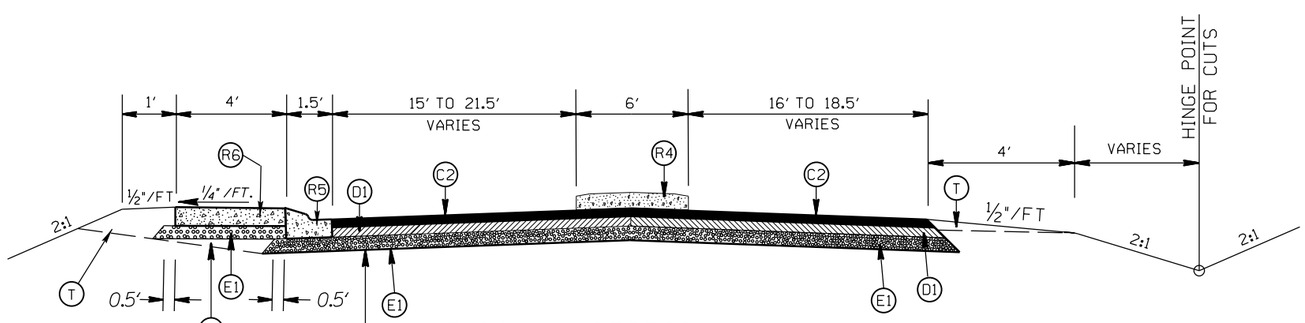

TYPICAL SECTION NO. 4

STA. 14+79.19 TO 15+10.34 -L-

PAVEMENT SCHEDULE

C1	PROP. APPROX. 1½" ASPHALT CONC. SURFACE COURSE, TYPE S9.5B, AT AN AVERAGE RATE OF 168 LBS. PER SQ. YD.
C2	PROP. APPROX. 3" ASPHALT CONC. SURFACE COURSE, TYPE S9.5B, AT AN AVERAGE RATE OF 168 LBS. PER SQ. YD. IN EACH OF TWO LAYERS.
D1	PROP. APPROX. 4" ASPHALT CONC. INTERMEDIATE COURSE, TYPE I19.0C, AT AN AVERAGE RATE OF 456 LBS. PER SQ. YD.
D2	PROP. VARIABLE DEPTH ASPHALT CONC. INTERMEDIATE COURSE.
E1	PROP. APPROX. 5" ASPHALT CONC. BASE COURSE, TYPE B25.0C, AT AN AVERAGE RATE OF 570 LBS. PER SQ. YD.
E2	PROP. VARIABLE DEPTH ASPHALT CONC. BASE COURSE
R1	PROP. 2'-6" CONC. CURB & GUTTER
R2	PROP. 1'-6" CONC. CURB & GUTTER, CLASS AA CONCRETE
R3	PROP. 7" TRUCK MOUNTABLE CONC. ISLAND, CLASS AA CONCRETE
R4	PROP. 5" MONOLITHIC CONC. ISLAND (SURFACE MOUNTED)
R5	PROP. 1'-6" CONC. CURB & GUTTER, CLASS AA CONCRETE (BLACK TINT)
R6	PROP. 7" TRUCK MOUNTABLE CONC. ISLAND, CLASS AA CONCRETE (BLACK TINT)
R7	PROP. MODIFIED SHOULDER BERM GUTTER (SEE DETAIL SHEET 2H)
T	EARTH MATERIAL
J	PROP. 6" ABC STONE

ROUNDABOUT AT THE INTERSECTION OF LAWYERS RD.(SR-1004) AND MILL GROVE RD.(SR-1525)

			REVISIONS	
SCALE	N/A	DIVISION OF HIGHWAYS STATE OF NORTH CAROLINA DEPARTMENT OF TRANSPORTATION		
DATE	9-2020			
DWG. BY	DLS			
DESIGN BY	JCB			
APPROVED	JDH			

PROJECT NO.	SHEET NO.
44856.3.10	2B
F.A. PROJECT NO. HSIP-1004(065)	

ROADWAY DESIGN ENGINEER

NORTH CAROLINA PROFESSIONAL SEAL 034357 ENGINEER

DocuSigned by:

A92E75CC0FFB43E...

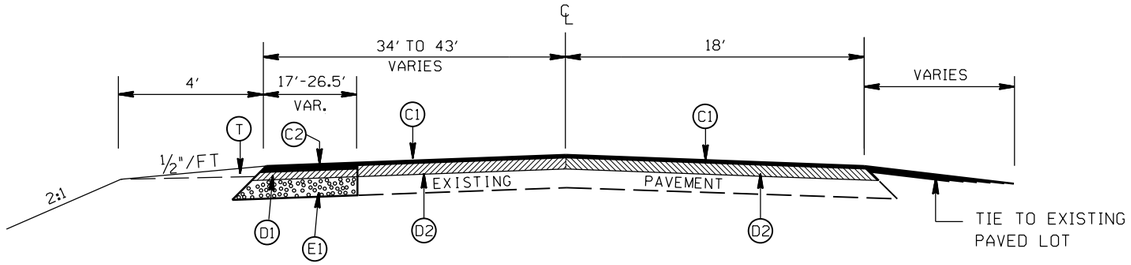

TYPICAL SECTION NO. 9

STA. 17+49.99 TO 17+98.71 -L-

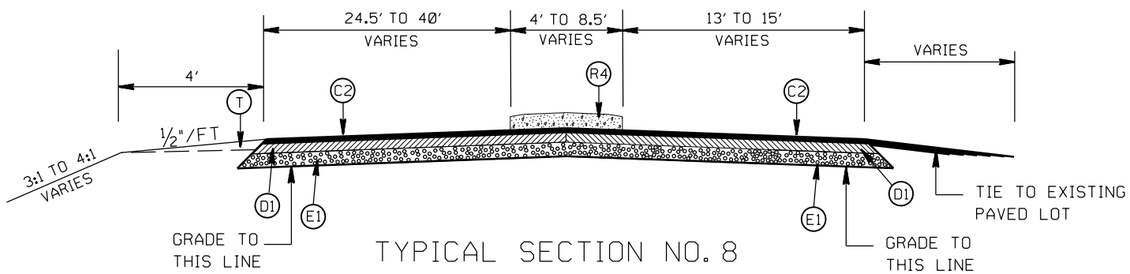

TYPICAL SECTION NO. 8

STA. 17+21.29 TO 17+49.99 -L-

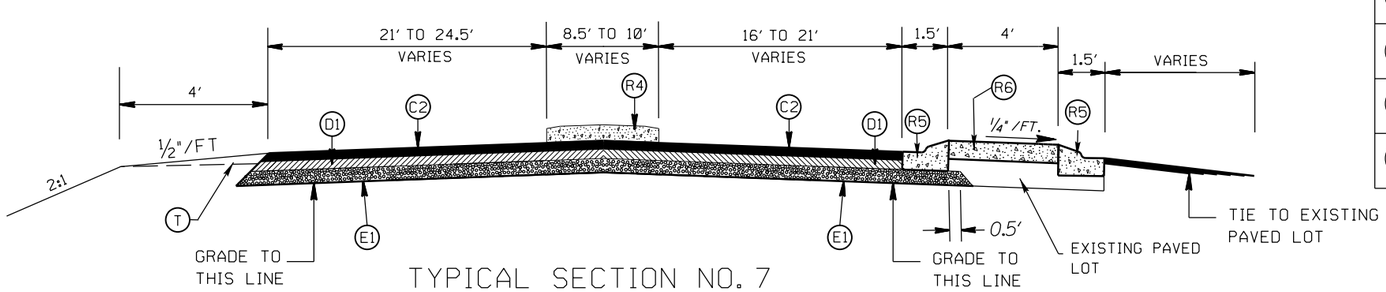

TYPICAL SECTION NO. 7

STA. 17+13.38 TO 17+21.29 -L-

NOTES:

-UTILIZE WELDED WIRE MESH (EITHER 4X4 W3.5XW3.5 OR 6X6 W5XW5) IN PROP. 7" TRUCK MOUNTABLE CONC. ISLAND (R3, R6).

-OVERLAP WELDED WIRE MESH PANELS 4".

PAVEMENT SCHEDULE

C1	PROP. APPROX. 1½" ASPHALT CONC. SURFACE COURSE, TYPE S9.5B, AT AN AVERAGE RATE OF 168 LBS. PER SQ. YD.
C2	PROP. APPROX. 3" ASPHALT CONC. SURFACE COURSE, TYPE S9.5B, AT AN AVERAGE RATE OF 168 LBS. PER SQ. YD. IN EACH OF TWO LAYERS.
D1	PROP. APPROX. 4" ASPHALT CONC. INTERMEDIATE COURSE, TYPE I19.0C, AT AN AVERAGE RATE OF 456 LBS. PER SQ. YD.
D2	PROP. VARIABLE DEPTH ASPHALT CONC. INTERMEDIATE COURSE.
E1	PROP. APPROX. 5" ASPHALT CONC. BASE COURSE, TYPE B25.0C, AT AN AVERAGE RATE OF 570 LBS. PER SQ. YD.
E2	PROP. VARIABLE DEPTH ASPHALT CONC. BASE COURSE
R1	PROP. 2'-6" CONC. CURB & GUTTER
R2	PROP. 1'-6" CONC. CURB & GUTTER, CLASS AA CONCRETE
R3	PROP. 7" TRUCK MOUNTABLE CONC. ISLAND, CLASS AA CONCRETE
R4	PROP. 5" MONOLITHIC CONC. ISLAND (SURFACE MOUNTED)
R5	PROP. 1'-6" CONC. CURB & GUTTER, CLASS AA CONCRETE (BLACK TINT)
R6	PROP. 7" TRUCK MOUNTABLE CONC. ISLAND, CLASS AA CONCRETE (BLACK TINT)
R7	PROP. MODIFIED SHOULDER BERM GUTTER (SEE DETAIL SHEET 2H)
T	EARTH MATERIAL
J	PROP. 6" ABC STONE

ROUNDABOUT AT THE INTERSECTION OF LAWYERS RD.(SR-1004) AND MILL GROVE RD.(SR-1525)

			REVISIONS	
SCALE	N/A	DIVISION OF HIGHWAYS STATE OF NORTH CAROLINA		
DATE	9-2020			
DWG. BY	DLS			
DESIGN BY	JCB			
APPROVED	JDH			

PROJECT NO.	SHEET NO.
44856.3.10	2C
F.A. PROJECT NO. HSIP-1004(065)	

ROADWAY DESIGN ENGINEER

SEAL 032357

DocuSigned by:

A92E75CC0FFB43B...

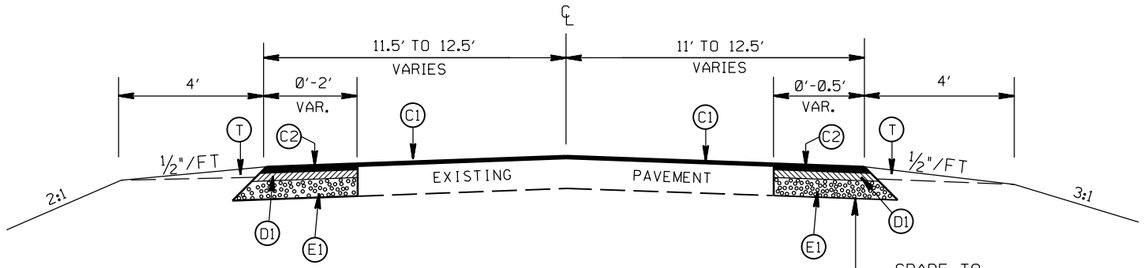

TYPICAL SECTION NO. 12

STA. 11+37.14 TO 11+93.74 -Y-

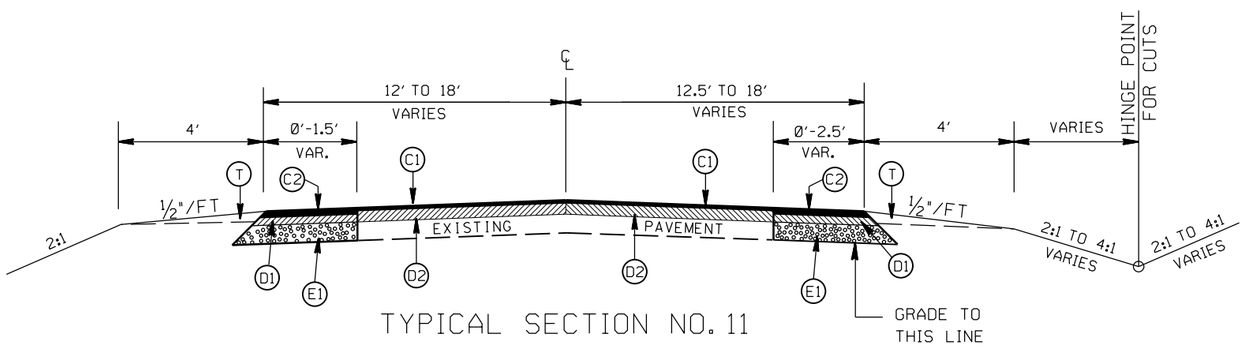

TYPICAL SECTION NO. 11

STA. 18+17.58 TO 21+37.81 -L-

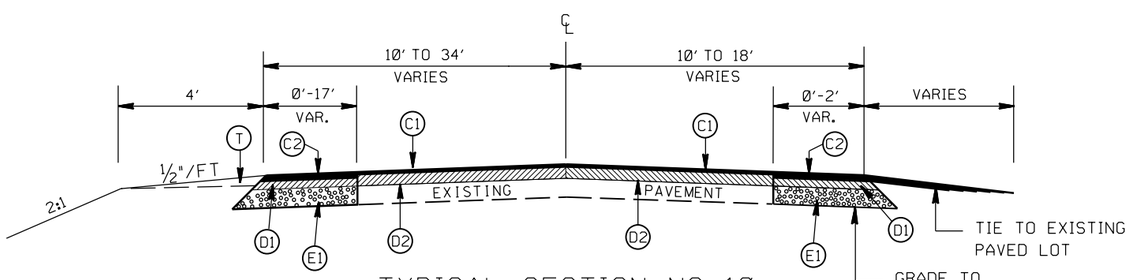

TYPICAL SECTION NO. 10

STA. 17+98.71 TO 18+17.58 -L-

STA. 18+50.00 TO 19+58.84 -Y-

NOTES:

-UTILIZE WELDED WIRE MESH (EITHER 4X4 W3.5XW3.5 OR 6X6 W5XW5) IN PROP. 7" TRUCK MOUNTABLE CONC. ISLAND (R3, R6).

-OVERLAP WELDED WIRE MESH PANELS 4".

PAVEMENT SCHEDULE

C1	PROP. APPROX. 1½" ASPHALT CONC. SURFACE COURSE, TYPE S9.5B, AT AN AVERAGE RATE OF 168 LBS. PER SQ. YD.
C2	PROP. APPROX. 3" ASPHALT CONC. SURFACE COURSE, TYPE S9.5B, AT AN AVERAGE RATE OF 168 LBS. PER SQ. YD. IN EACH OF TWO LAYERS.
D1	PROP. APPROX. 4" ASPHALT CONC. INTERMEDIATE COURSE, TYPE I19.0C, AT AN AVERAGE RATE OF 456 LBS. PER SQ. YD.
D2	PROP. VARIABLE DEPTH ASPHALT CONC. INTERMEDIATE COURSE.
E1	PROP. APPROX. 5" ASPHALT CONC. BASE COURSE, TYPE B25.0C, AT AN AVERAGE RATE OF 570 LBS. PER SQ. YD.
E2	PROP. VARIABLE DEPTH ASPHALT CONC. BASE COURSE
R1	PROP. 2'-6" CONC. CURB & GUTTER
R2	PROP. 1'-6" CONC. CURB & GUTTER, CLASS AA CONCRETE
R3	PROP. 7" TRUCK MOUNTABLE CONC. ISLAND, CLASS AA CONCRETE
R4	PROP. 5" MONOLITHIC CONC. ISLAND (SURFACE MOUNTED)
R5	PROP. 1'-6" CONC. CURB & GUTTER, CLASS AA CONCRETE (BLACK TINT)
R6	PROP. 7" TRUCK MOUNTABLE CONC. ISLAND, CLASS AA CONCRETE (BLACK TINT)
R7	PROP. MODIFIED SHOULDER BERM GUTTER (SEE DETAIL SHEET 2H)
T	EARTH MATERIAL
J	PROP. 6" ABC STONE

ROUNDABOUT AT THE INTERSECTION OF LAWYERS RD.(SR-1004) AND MILL GROVE RD.(SR-1525)

		REVISIONS	
SCALE	N/A		
DATE	9-2020		
DWG. BY	DLS		
DESIGN BY	JCB		
APPROVED	JDH		

PROJECT NO.	SHEET NO.
44856.3.10	2D
F.A. PROJECT NO. HSIP-1004(065)	

ROADWAY DESIGN ENGINEER

NORTH CAROLINA PROFESSIONAL SEAL 034357 ENGINEER JOHN DAVID MICHAEL

DocuSigned by:

A92E75CC0FFB43B...

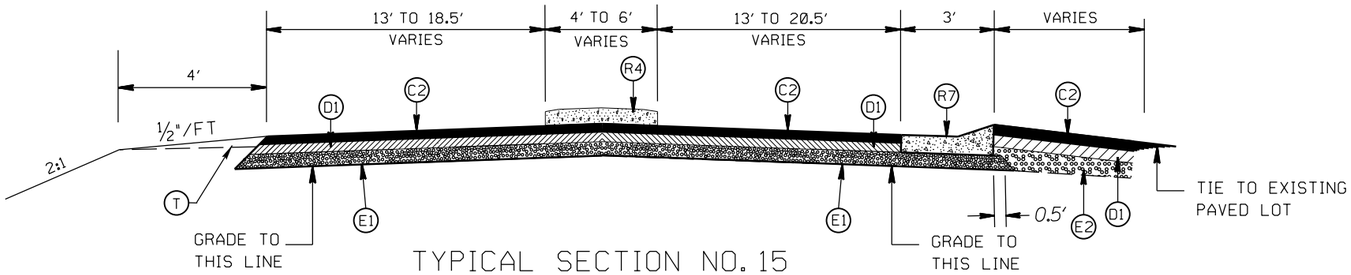

TYPICAL SECTION NO. 15

STA. 13+90.65 TO 14+42.02 -Y-

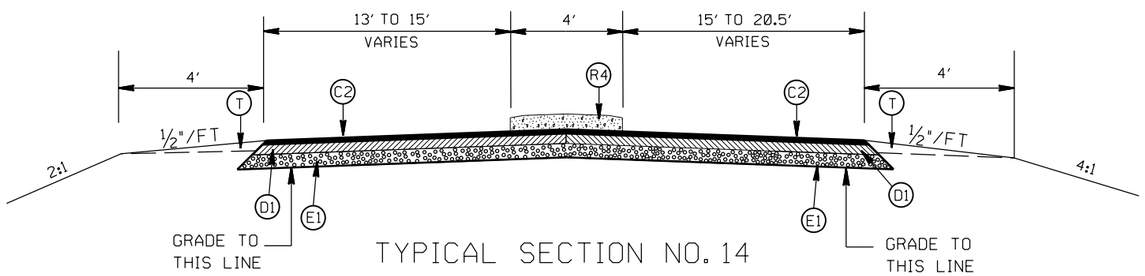

TYPICAL SECTION NO. 14

STA. 13+00.00 TO 13+90.65 -Y-

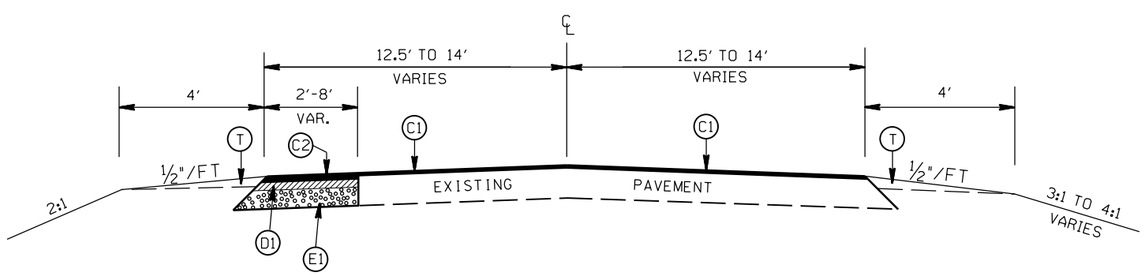

TYPICAL SECTION NO. 13

STA. 11+93.74 TO 12+50.00 -Y-

NOTES:

-UTILIZE WELDED WIRE MESH (EITHER 4X4 W3.5XW3.5 OR 6X6 W5XW5) IN PROP. 7" TRUCK MOUNTABLE CONC. ISLAND (R3, R6).

-OVERLAP WELDED WIRE MESH PANELS 4".

PAVEMENT SCHEDULE

C1	PROP. APPROX. 1½" ASPHALT CONC. SURFACE COURSE, TYPE S9.5B, AT AN AVERAGE RATE OF 168 LBS. PER SQ. YD.
C2	PROP. APPROX. 3" ASPHALT CONC. SURFACE COURSE, TYPE S9.5B, AT AN AVERAGE RATE OF 168 LBS. PER SQ. YD. IN EACH OF TWO LAYERS.
D1	PROP. APPROX. 4" ASPHALT CONC. INTERMEDIATE COURSE, TYPE I19.0C, AT AN AVERAGE RATE OF 456 LBS. PER SQ. YD.
D2	PROP. VARIABLE DEPTH ASPHALT CONC. INTERMEDIATE COURSE.
E1	PROP. APPROX. 5" ASPHALT CONC. BASE COURSE, TYPE B25.0C, AT AN AVERAGE RATE OF 570 LBS. PER SQ. YD.
E2	PROP. VARIABLE DEPTH ASPHALT CONC. BASE COURSE
R1	PROP. 2'-6" CONC. CURB & GUTTER
R2	PROP. 1'-6" CONC. CURB & GUTTER, CLASS AA CONCRETE
R3	PROP. 7" TRUCK MOUNTABLE CONC. ISLAND, CLASS AA CONCRETE
R4	PROP. 5" MONOLITHIC CONC. ISLAND (SURFACE MOUNTED)
R5	PROP. 1'-6" CONC. CURB & GUTTER, CLASS AA CONCRETE (BLACK TINT)
R6	PROP. 7" TRUCK MOUNTABLE CONC. ISLAND, CLASS AA CONCRETE (BLACK TINT)
R7	PROP. MODIFIED SHOULDER BERM GUTTER (SEE DETAIL SHEET 2H)
T	EARTH MATERIAL
J	PROP. 6" ABC STONE

ROUNDABOUT AT THE INTERSECTION OF LAWYERS RD.(SR-1004) AND MILL GROVE RD.(SR-1525)

		REVISIONS	
SCALE	N/A		
DATE	9-2020		
DWG. BY	DLS		
DESIGN BY	JCB		
APPROVED	JDH		

PROJECT NO.	SHEET NO.
44856.3.10	2E
F.A. PROJECT NO. HSIP-1004(065)	

ROADWAY DESIGN ENGINEER

SEAL 031351

DocuSigned by:

A92E75CC0FFB43E...

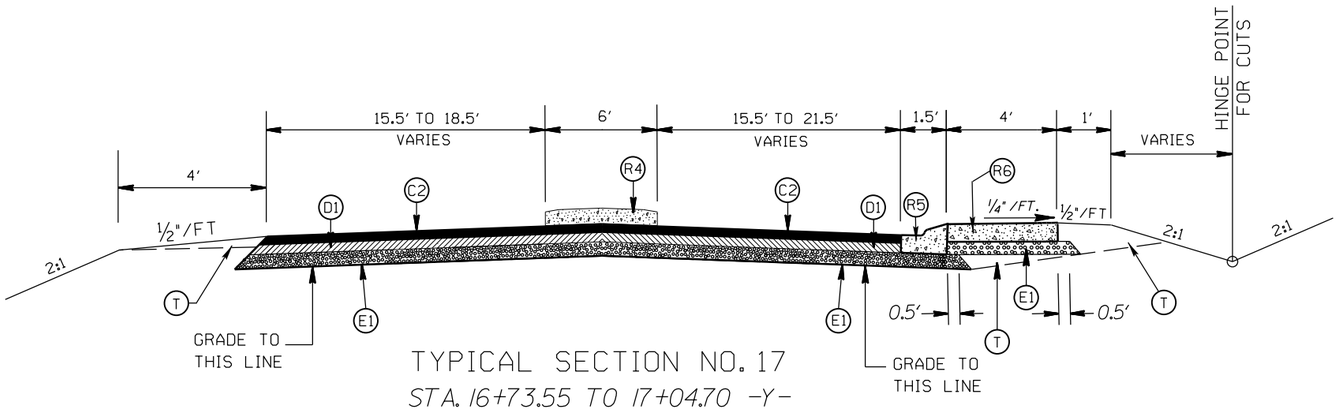

TYPICAL SECTION NO. 17

STA. 16+73.55 TO 17+04.70 -Y-

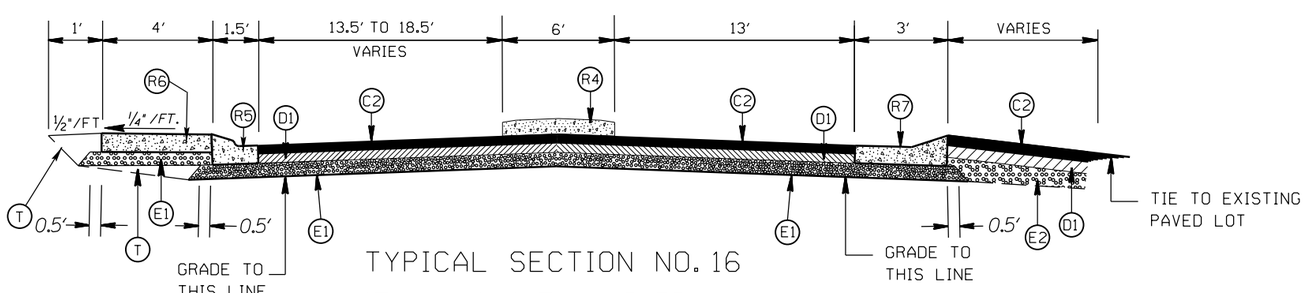

TYPICAL SECTION NO. 16

STA. 14+42.02 TO 14+50.75 -Y-

NOTES:

-UTILIZE WELDED WIRE MESH (EITHER 4X4 W3.5XW3.5 OR 6X6 W5XW5) IN PROP. 7" TRUCK MOUNTABLE CONC. ISLAND (R3,R6).

-OVERLAP WELDED WIRE MESH PANELS 4".

PAVEMENT SCHEDULE

C1	PROP. APPROX. 1½" ASPHALT CONC. SURFACE COURSE, TYPE S9.5B, AT AN AVERAGE RATE OF 168 LBS. PER SQ. YD.
C2	PROP. APPROX. 3" ASPHALT CONC. SURFACE COURSE, TYPE S9.5B, AT AN AVERAGE RATE OF 168 LBS. PER SQ. YD. IN EACH OF TWO LAYERS.
D1	PROP. APPROX. 4" ASPHALT CONC. INTERMEDIATE COURSE, TYPE I19.0C, AT AN AVERAGE RATE OF 456 LBS. PER SQ. YD.
D2	PROP. VARIABLE DEPTH ASPHALT CONC. INTERMEDIATE COURSE.
E1	PROP. APPROX. 5" ASPHALT CONC. BASE COURSE, TYPE B25.0C, AT AN AVERAGE RATE OF 570 LBS. PER SQ. YD.
E2	PROP. VARIABLE DEPTH ASPHALT CONC. BASE COURSE
R1	PROP. 2'-6" CONC. CURB & GUTTER
R2	PROP. 1'-6" CONC. CURB & GUTTER, CLASS AA CONCRETE
R3	PROP. 7" TRUCK MOUNTABLE CONC. ISLAND, CLASS AA CONCRETE
R4	PROP. 5" MONOLITHIC CONC. ISLAND (SURFACE MOUNTED)
R5	PROP. 1'-6" CONC. CURB & GUTTER, CLASS AA CONCRETE (BLACK TINT)
R6	PROP. 7" TRUCK MOUNTABLE CONC. ISLAND, CLASS AA CONCRETE (BLACK TINT)
R7	PROP. MODIFIED SHOULDER BERM GUTTER (SEE DETAIL SHEET 2H)
T	EARTH MATERIAL
J	PROP. 6" ABC STONE

ROUNDABOUT AT THE INTERSECTION OF LAWYERS RD.(SR-1004) AND MILL GROVE RD.(SR-1525)

		REVISIONS	
SCALE	N/A		
DATE	9-2020		
DWG. BY	DLS		
DESIGN BY	JCB		
APPROVED	JDH		

PROJECT NO.	SHEET NO.
44856.3.10	2F
F.A. PROJECT NO. HSIP-1004(065)	

ROADWAY DESIGN ENGINEER

NORTH CAROLINA PROFESSIONAL SEAL 034357 ENGINEER MICHAEL J. BERGIN

DocuSigned by:

A92E75CC0FFB43B...

NOTES:
-UTILIZE WELDED WIRE MESH (EITHER 4X4 W3.5XW3.5 OR 6X6 W5XW5) IN PROP. 7" TRUCK MOUNTABLE CONC. ISLAND (R3, R6).
-OVERLAP WELDED WIRE MESH PANELS 4".

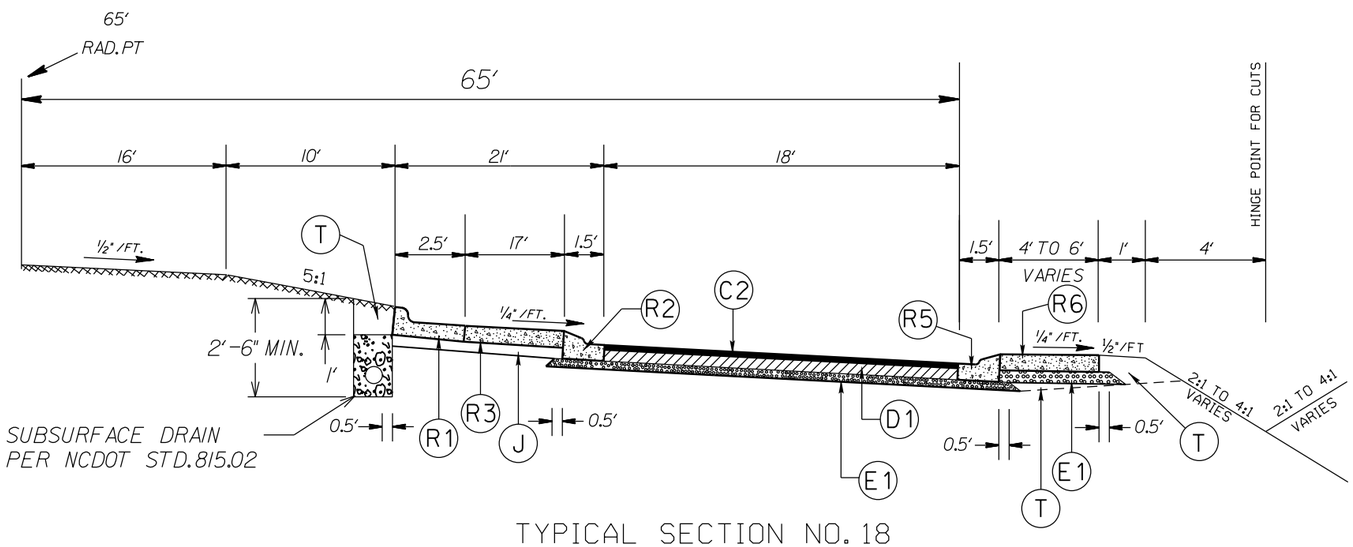

TYPICAL SECTION NO. 18
ROUNDABOUT

PAVEMENT SCHEDULE

C1	PROP. APPROX. 1½" ASPHALT CONC. SURFACE COURSE, TYPE S9.5B, AT AN AVERAGE RATE OF 168 LBS. PER SQ. YD.
C2	PROP. APPROX. 3" ASPHALT CONC. SURFACE COURSE, TYPE S9.5B, AT AN AVERAGE RATE OF 168 LBS. PER SQ. YD. IN EACH OF TWO LAYERS.
D1	PROP. APPROX. 4" ASPHALT CONC. INTERMEDIATE COURSE, TYPE I19.0C, AT AN AVERAGE RATE OF 456 LBS. PER SQ. YD.
D2	PROP. VARIABLE DEPTH ASPHALT CONC. INTERMEDIATE COURSE.
E1	PROP. APPROX. 5" ASPHALT CONC. BASE COURSE, TYPE B25.0C, AT AN AVERAGE RATE OF 570 LBS. PER SQ. YD.
E2	PROP. VARIABLE DEPTH ASPHALT CONC. BASE COURSE
R1	PROP. 2'-6" CONC. CURB & GUTTER
R2	PROP. 1'-6" CONC. CURB & GUTTER, CLASS AA CONCRETE
R3	PROP. 7" TRUCK MOUNTABLE CONC. ISLAND, CLASS AA CONCRETE
R4	PROP. 5" MONOLITHIC CONC. ISLAND (SURFACE MOUNTED)
R5	PROP. 1'-6" CONC. CURB & GUTTER, CLASS AA CONCRETE (BLACK TINT)
R6	PROP. 7" TRUCK MOUNTABLE CONC. ISLAND, CLASS AA CONCRETE (BLACK TINT)
R7	PROP. MODIFIED SHOULDER BERM GUTTER (SEE DETAIL SHEET 2H)
T	EARTH MATERIAL
J	PROP. 6" ABC STONE

ROUNDABOUT AT THE INTERSECTION OF LAWYERS RD.(SR-1004) AND MILL GROVE RD.(SR-1525)

SCALE	N/A
DATE	9-2020
DWG. BY	DLS
DESIGN BY	JCB
APPROVED	JDH

DIVISION OF HIGHWAYS STATE OF NORTH CAROLINA

REVISIONS	

PROJECT NO.	SHEET NO.
44856.3.10	2G
F.A. PROJECT NO. HSIP-1004(065)	

ROADWAY DESIGN ENGINEER

SEAL 034357

DocuSigned by:

A92E75CC0FFB43B...

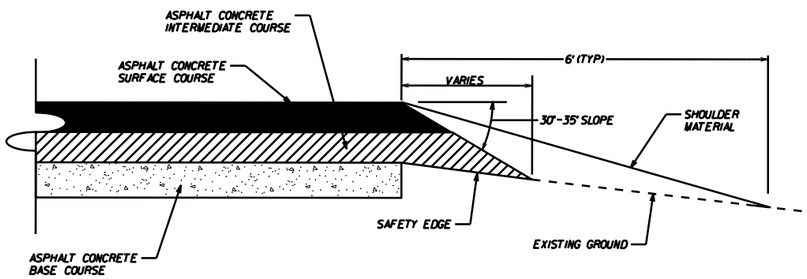

SAFETY EDGE DETAIL

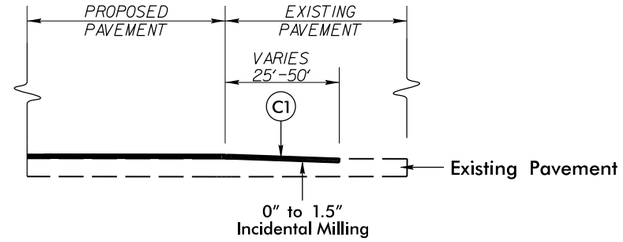

INCIDENTAL MILLING DETAIL
EXISTING ROAD TIE-IN
PROJECT TIE-INS

PAVEMENT SCHEDULE

C1	PROP. APPROX. 1½" ASPHALT CONC. SURFACE COURSE, TYPE S9.5B, AT AN AVERAGE RATE OF 168 LBS. PER SQ. YD.
C2	PROP. APPROX. 3" ASPHALT CONC. SURFACE COURSE, TYPE S9.5B, AT AN AVERAGE RATE OF 168 LBS. PER SQ. YD. IN EACH OF TWO LAYERS.
D1	PROP. APPROX. 4" ASPHALT CONC. INTERMEDIATE COURSE, TYPE I19.0C, AT AN AVERAGE RATE OF 456 LBS. PER SQ. YD.
D2	PROP. VARIABLE DEPTH ASPHALT CONC. INTERMEDIATE COURSE.
E1	PROP. APPROX. 5" ASPHALT CONC. BASE COURSE, TYPE B25.0C, AT AN AVERAGE RATE OF 570 LBS. PER SQ. YD.
E2	PROP. VARIABLE DEPTH ASPHALT CONC. BASE COURSE
R1	PROP. 2'-6" CONC. CURB & GUTTER
R2	PROP. 1'-6" CONC. CURB & GUTTER, CLASS AA CONCRETE
R3	PROP. 7" TRUCK MOUNTABLE CONC. ISLAND, CLASS AA CONCRETE
R4	PROP. 5" MONOLITHIC CONC. ISLAND (SURFACE MOUNTED)
R5	PROP. 1'-6" CONC. CURB & GUTTER, CLASS AA CONCRETE (BLACK TINT)
R6	PROP. 7" TRUCK MOUNTABLE CONC. ISLAND, CLASS AA CONCRETE (BLACK TINT)
R7	PROP. MODIFIED SHOULDER BERM GUTTER (SEE DETAIL SHEET 2H)
T	EARTH MATERIAL
J	PROP. 6" ABC STONE

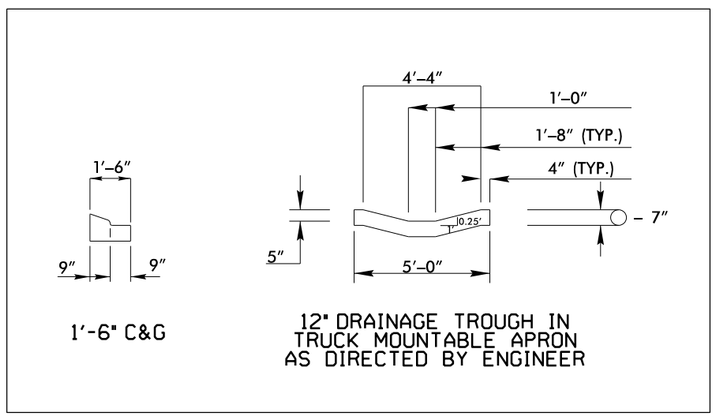

DRAINAGE TROUGH DETAIL

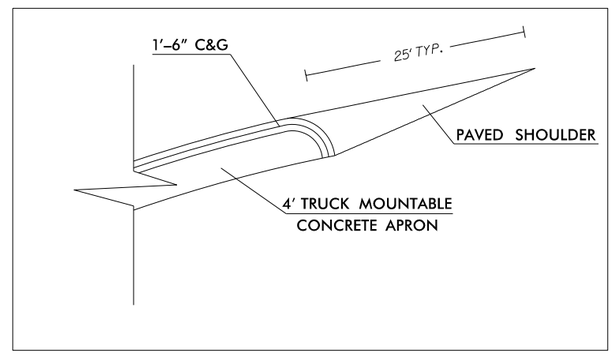

CURB DETAIL

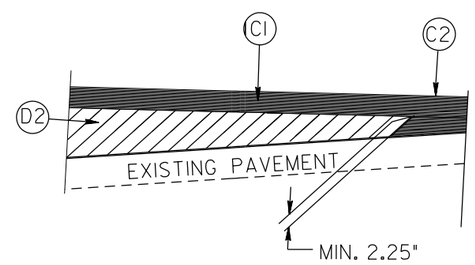

WEDGING DETAIL

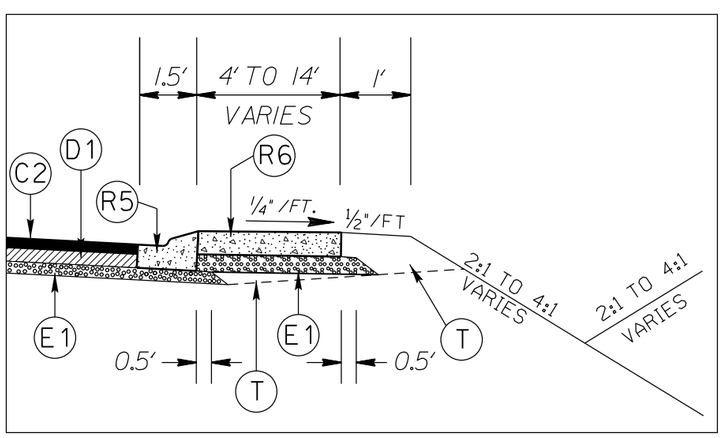

APRON DETAIL

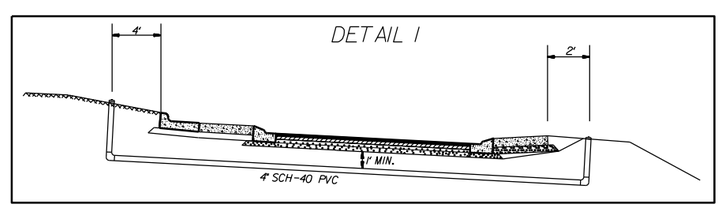

PVC PIPE DETAIL

NOTES:
-UTILIZE WELDED WIRE MESH (EITHER 4X4 W3.5XW3.5 OR 6X6 W5XW5) IN PROP. 7" TRUCK MOUNTABLE CONC. ISLAND (R3, R6).
-OVERLAP WELDED WIRE MESH PANELS 4".

ROUNDABOUT AT THE INTERSECTION OF LAWYERS RD.(SR-1004) AND MILL GROVE RD.(SR-1525)

		REVISIONS	
SCALE	N/A		
DATE	9-2020		
DWG. BY	DLS		
DESIGN BY	JCB		
APPROVED	JDH		

PROJECT NO.	SHEET NO.
44856.3.10	2H
F.A. PROJECT NO. HSIP-1004(065)	

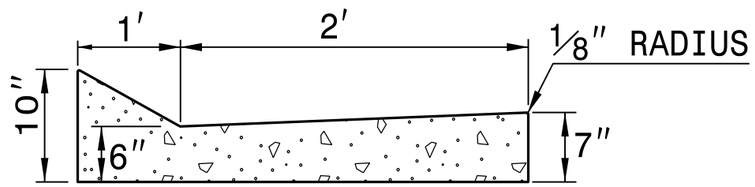

MODIFIED SHOULDER BERM GUTTER

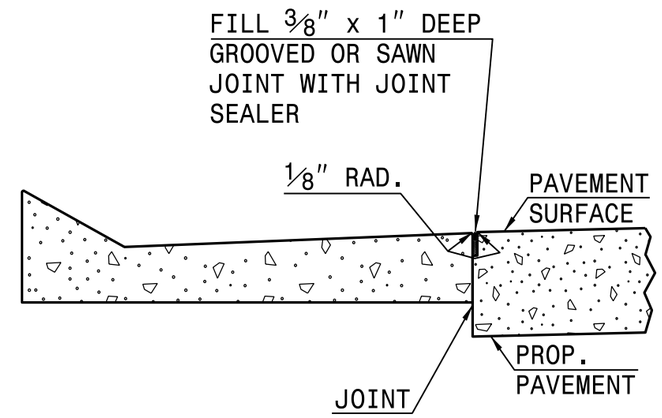

LONGITUDINAL JOINT

GENERAL NOTES:
- PLACE CONTRACTION JOINTS AT 10′ INTERVALS, EXCEPT THAT A 15′ SPACING MAY BE USED WHEN A MACHINE IS USED OR WHEN SATISFACTORY SUPPORT FOR THE FACE FORM CAN BE OBTAINED WITHOUT THE USE OF TEMPLATES AT 10′ INTERVALS.
- JOINT SPACING MAY BE ALTERED IF REQUIRED BY THE ENGINEER.
- CONTRACTION JOINTS MAY BE INSTALLED WITH THE USE OF TEMPLATES OR FORMED BY OTHER APPROVED METHODS. CONSTRUCT NON-TEMPLATE FORMED JOINTS A MIN. OF 1½″ DEEP.
- FILL ALL CONSTRUCTION JOINTS WITH JOINT FILLER AND SEALER.
- SPACE EXPANSION JOINTS AT 90′ INTERVALS AND ADJACENT TO ALL RIGID OBJECTS.

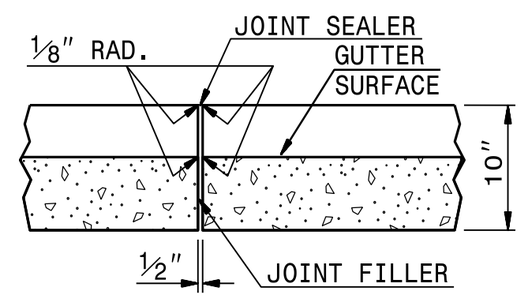

TRANSVERSE EXPANSION JOINT IN CURB AND GUTTER

SECTION VIEW OF JOINTS

ROUNDABOUT AT THE INTERSECTION OF LAWYERS RD.(SR-1004) AND MILL GROVE RD.(SR-1525)

		REVISIONS	
SCALE	N/A		
DATE	11-2020		
DWG. BY	JCB		
DESIGN BY	JCB		
APPROVED	JDH		

PROJECT NO.	SHEET NO.
44856.3.10	21
F.A. PROJECT NO. HSIP-1004(065)	

ROADWAY DESIGN ENGINEER

NORTH CAROLINA PROFESSIONAL SEAL 034357 ENGINEER MICHAEL DEPERIO

DocuSigned by:

A92E75CC0FFB43B...

STATE OF NORTH CAROLINA
DEPT. OF TRANSPORTATION
DIVISION OF HIGHWAYS
RALEIGH, N.C.

1-12

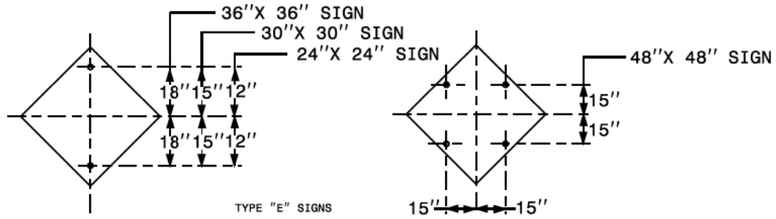

TYPE "E" SIGNS

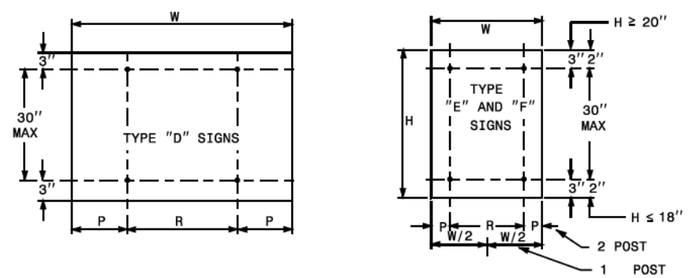

	NO. SUPPORTS		
	2	3 *	4
P	.207W	.145W	.107W
R	.586W	.355W	.262W

UNITS ON ATTACHED SHEET
*MINIMUM 4 FT. BETWEEN CHANNEL POSTS

HOLE PUNCHING DETAIL

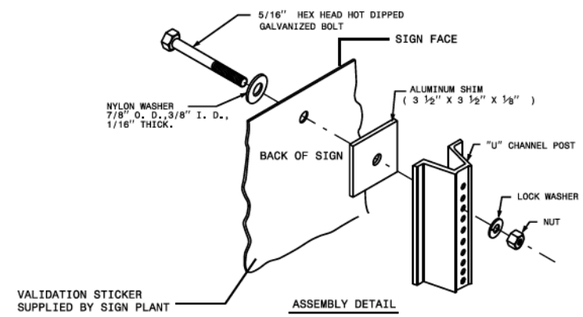

ASSEMBLY DETAIL

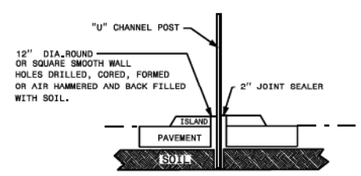

DETAIL FOR INSTALLATION OF CHANNEL POST IN CONCRETE

ENGLISH STANDARD DRAWING FOR

MOUNTING OF TYPE 'D', 'E' AND 'F' SIGNS ON 'U' CHANNEL POSTS

SHEET 2 OF 2

904.50

STATE OF NORTH CAROLINA
DEPT. OF TRANSPORTATION
DIVISION OF HIGHWAYS
RALEIGH, N.C.

1-12

ENGLISH STANDARD DRAWING FOR

MOUNTING OF TYPE 'D', 'E' AND 'F' SIGNS ON 'U' CHANNEL POSTS

SHEET 2 OF 2

904.50

12" DIA. HOLE LOCATION FOR SIGN U-CHANNEL POST IN SPLITTER ISLANDS

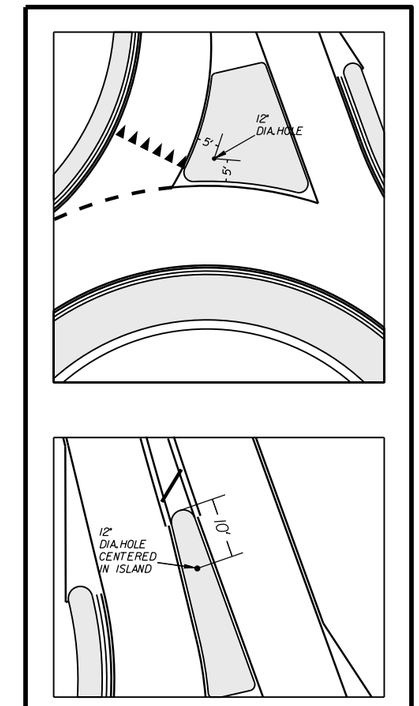

ROUNDABOUT AT THE INTERSECTION OF LAWYERS RD. (SR-1004) AND MILL GROVE RD. (SR-1525)

		REVISIONS	
SCALE	N/A		
DATE	9-2020		
DWG. BY	DLS		
DESIGN BY	JCB		
APPROVED	JDH		

COMPUTED BY: JCB DATE: 09/01/2020
CHECKED BY: _____ DATE: _____

PROJECT REFERENCE NO.	SHEET NO.
44856.3.10	3

STATE OF NORTH CAROLINA
DIVISION OF HIGHWAYS
SUB–REGIONAL & REGIONAL
LIST OF PIPES, ENDWALLS, ETC. (FOR PIPES 48" & UNDER)

NOTE: Invert Elevations are for Bid Purposes only and shall not be used for project construction stakeout.
See "Standard Specifications For Roads and Structures, Section 300–5".

| STATION | LOCATION (LT,RT, OR CL) | STRUCTURE NO. FROM | STRUCTURE NO. TO | TOP ELEVATION | INVERT ELEVATION | INVERT ELEVATION | SLOPE CRITICAL | DRAINAGE PIPE (RCP, CSP, CAAP, HDPE, or PVC) SIZE 12" | 15" | 18" | 24" | 30" | 36" | 42" | 48" | DO NOT USE RCP | DO NOT USE CSP | DO NOT USE CAAP | DO NOT USE HDPE | C.S. PIPE SIZE 12" | 15" | 18" | 24" | 36" | 42" | 48" | R.C. PIPE (CLASS III) SIZE 15" | 18" | 24" | 30" | 36" | 42" | 48" | R.C. PIPE (CLASS IV) SIZE 12" | 15" | 18" | 24" | 30" | 36" | 42" | 48" | *** R. C. PIPE (CLASS V) | ** R. C. PIPE CULVERTS, CONTRACTOR DESIGN PIPE | ** R. C. PIPE CULVERTS, CONTRACTOR DESIGN PIPE | 15" SIDE DRAIN PIPE | 18" SIDE DRAIN PIPE | ENDWALLS STD. 838.01, STD. 838.11 OR STD. 838.80 (UNLESS NOTED OTHERWISE) CU. YDS. R.C.P. | C.S.P. | QUANTITIES FOR DRAINAGE STRUCTURES PER EACH (0' THRU 5.0') | * TOTAL LF. FOR PAY QUANTITY SHALL BE COL. 'A' + (1.3 X COL. 'B') LIN. *FT. A: 5.0' THRU 10.0' | B: 10.0' AND ABOVE | C.B. STD. 840.01 OR STD. 840.02 | FRAME, GRATES AND HOOD STANDARD 840.03 TYPE OF GRATE E | F | G | CONCRETE TRANSITIONAL SECTION CATCH BASIN | DROP INLET | G.D.I. FRAME WITH GRATE STD. 840.22 | G.D.I. FRAME WITH TWO GRATES STD. 840.22 | G.D.I. (N.S.) FRAME WITH GRATE STD. 840.24 | G.D.I. (N.S.) FRAME WITH TWO GRATES STD. 840.24 | J.B. STD. 840.31 OR 840.32 | CORR. STEEL ELBOWS NO. & SIZE | CONC. COLLARS CL. "B" C.Y. STD 840.72 | CONC. & BRICK PIPE PLUG, C.Y. STD. 840.71 | PIPE REMOVAL LIN.FT. | REMARKS |
|---|---|---

PROJECT NO.	SHEET NO.
44856.3.10	4
F.A. PROJECT NO. HSIP-1004(065)	

ROADWAY DESIGN ENGINEER

NORTH CAROLINA PROFESSIONAL SEAL 034357 ENGINEER

DocuSigned by:
A92E75CC0FFB43B...

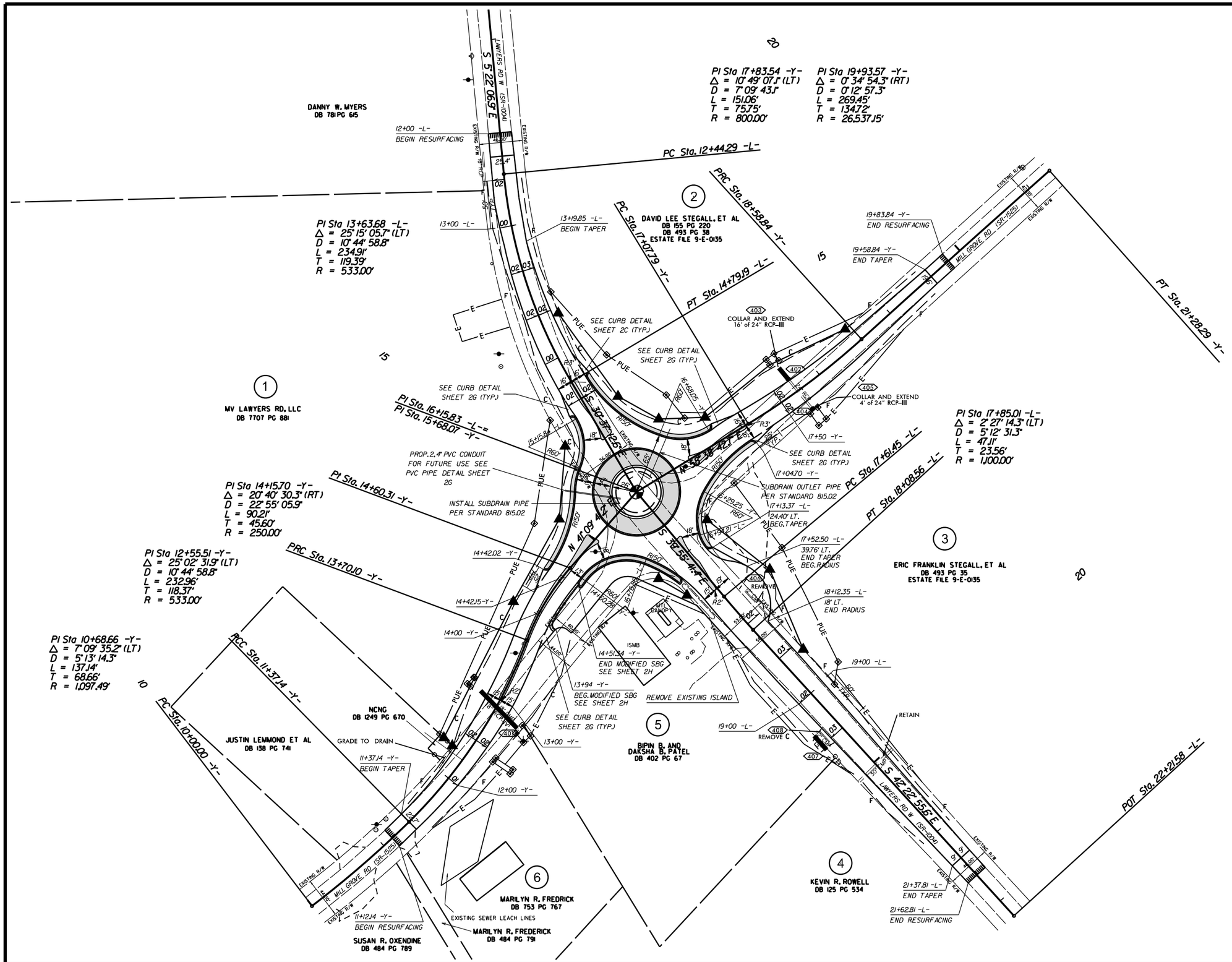

NOTE: SEE SHEET 4A FOR R/W AND EASEMENT LOCATIONS

NOTE: INCIDENTAL MILL APPROX. 25' AT EACH TIE IN TO PROVIDE A SMOOTH TRANSITION TO THE EXISTING ASPHALT PAVEMENT.

ROUNDABOUT AT THE INTERSECTION OF LAWYERS RD. (SR-1004) AND MILL GROVE RD. (SR-1525)

		REVISIONS
SCALE	1"=50'	
DATE	1-2022	
DWG. BY	JCB	
DESIGN BY	JCB	
APPROVED	JDH	

PROJECT NO.	SHEET NO.
44856.3.10	4A
F.A. PROJECT NO. HSIP-1004(065)	

ROADWAY DESIGN ENGINEER

NORTH CAROLINA PROFESSIONAL SEAL 034357 ENGINEER

DocuSigned by:
A92E75CC0FFB43B...

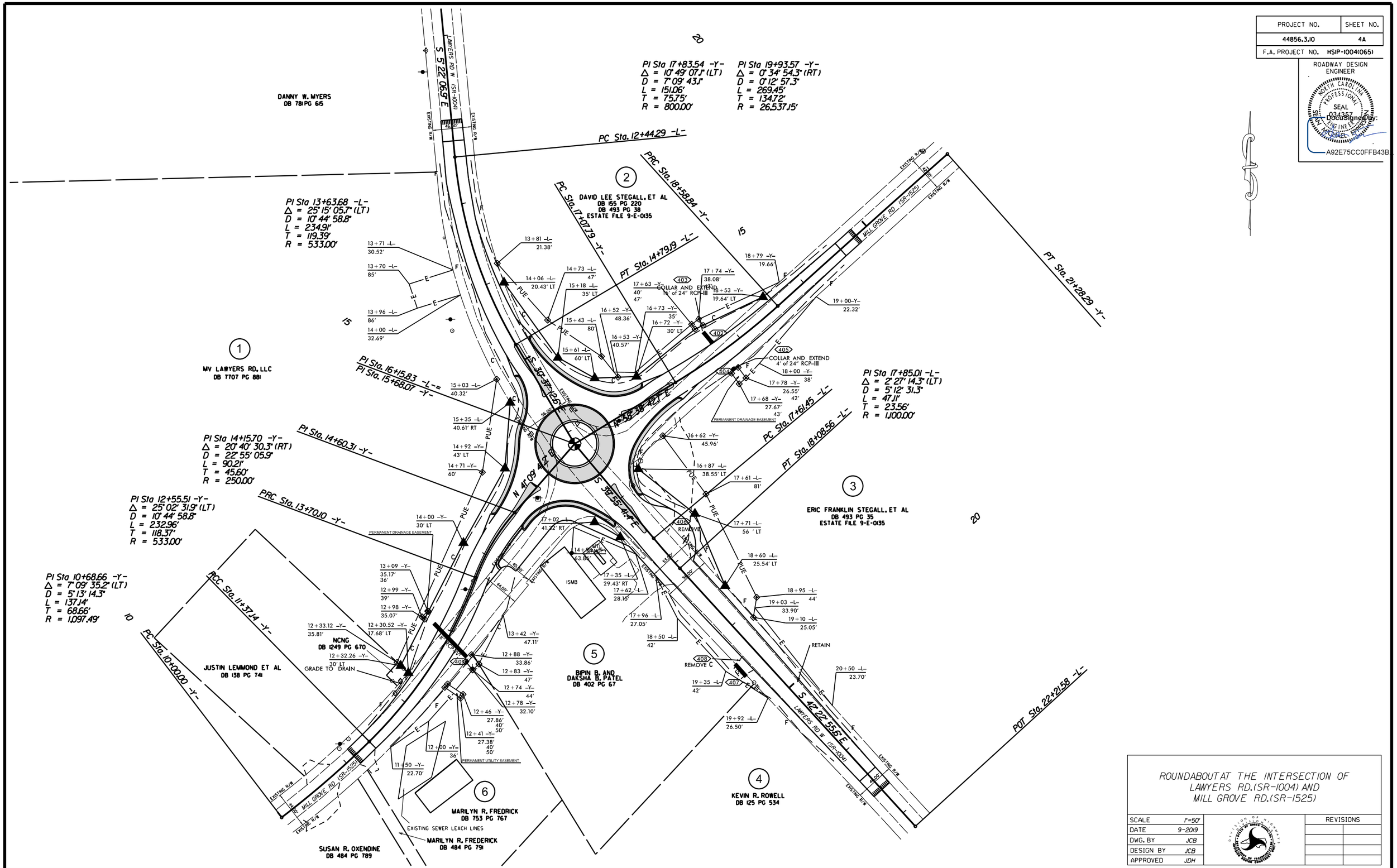

ROUNDABOUT AT THE INTERSECTION OF LAWYERS RD.(SR-1004) AND MILL GROVE RD.(SR-1525)

		REVISIONS
SCALE	1"=50'	
DATE	9-2019	
DWG. BY	JCB	
DESIGN BY	JCB	
APPROVED	JDH	

PROJECT NO.	SHEET NO.
44856.3.10	5
F.A. PROJECT NO. HSIP-1004(065)	

ROADWAY DESIGN ENGINEER

SEAL 034367

DocuSigned by:

A92E75CC0FFB43B...

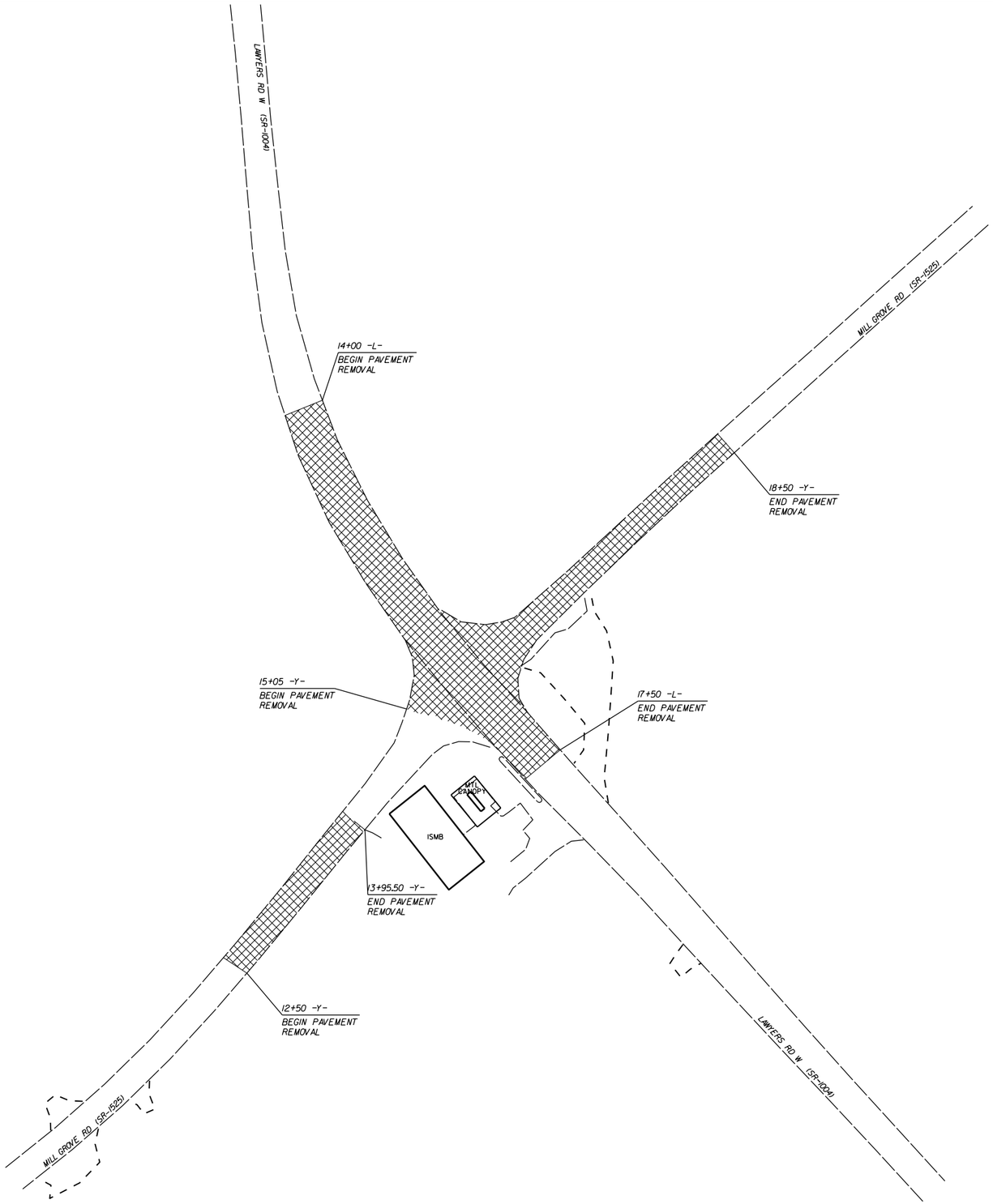

PAVEMENT REMOVAL

ROUNDABOUT AT THE INTERSECTION OF LAWYERS RD.(SR-1004) AND MILL GROVE RD.(SR-1525)

			REVISIONS	
SCALE	1"=50'			
DATE	9-2019			
DWG. BY	JCB			
DESIGN BY	JCB			
APPROVED	JDH			

PROJECT REFERENCE NO.	SHEET NO.
44856.3J0	6

ROADWAY DESIGN ENGINEER

NORTH CAROLINA PROFESSIONAL SEAL 038439 ENGINEER MICHAEL BAKER

DocuSigned by:

A92E75CC0FFB43B...

HYDRAULICS ENGINEER

DOCUMENT NOT CONSIDERED FINAL UNLESS ALL SIGNATURES COMPLETED

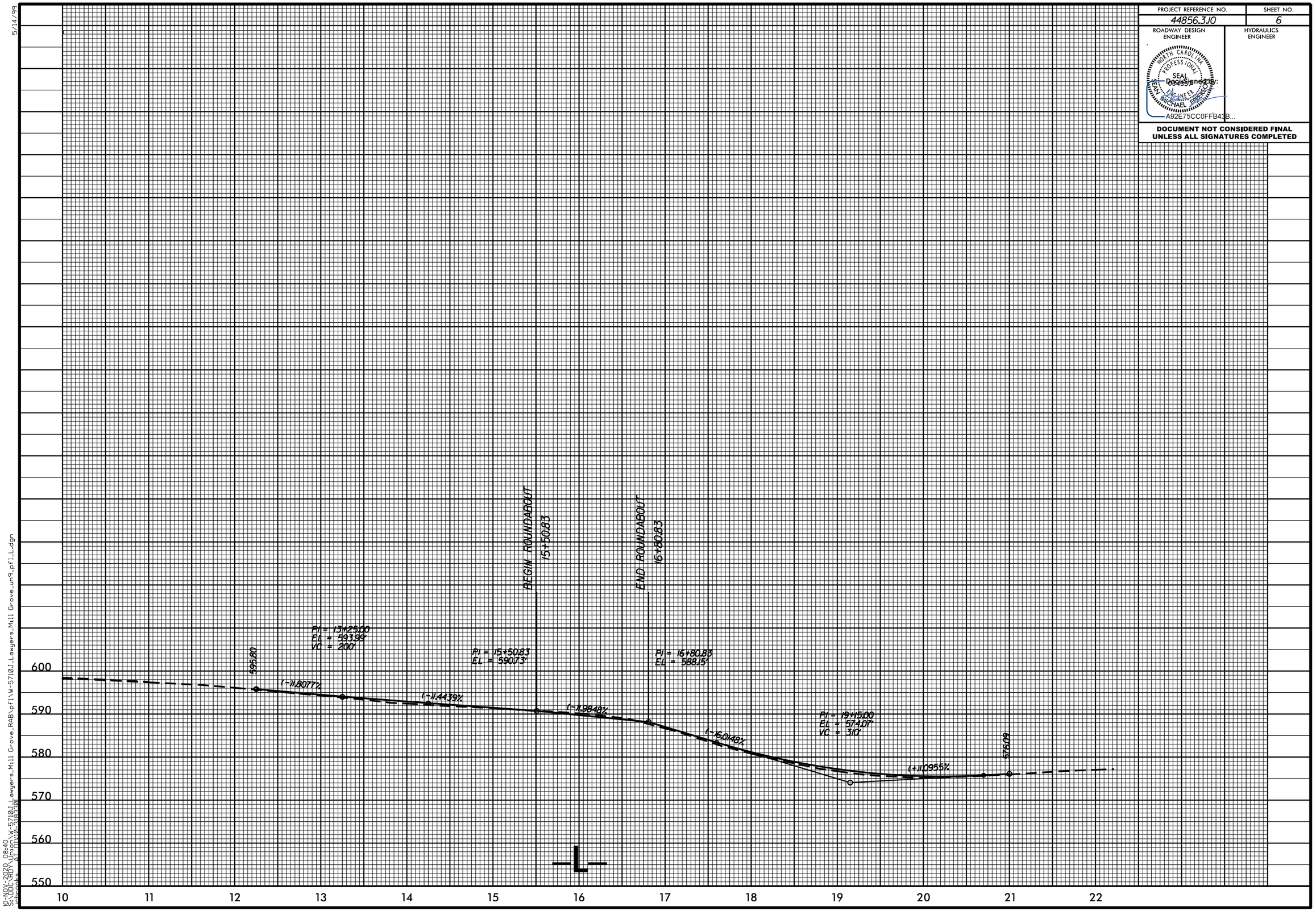

5/14/99

10-NOV-2020 08:40
S:\DOC\ROY\Union\W-5710J_Lawyers_Mill Grove_RAB\pfl\W-5710J_Lawyers_Mill Grove_un9_pfl_L.dgn
jchooks AT DIVD-3183x30

5/14/99

PROJECT REFERENCE NO.	SHEET NO.
44856.3J0	7

ROADWAY DESIGN ENGINEER

NORTH CAROLINA PROFESSIONAL SEAL ENGINEER MICHAEL L. BRIDGES

DocuSigned by:

A92E75CC0FFB48B...

HYDRAULICS ENGINEER

DOCUMENT NOT CONSIDERED FINAL UNLESS ALL SIGNATURES COMPLETED

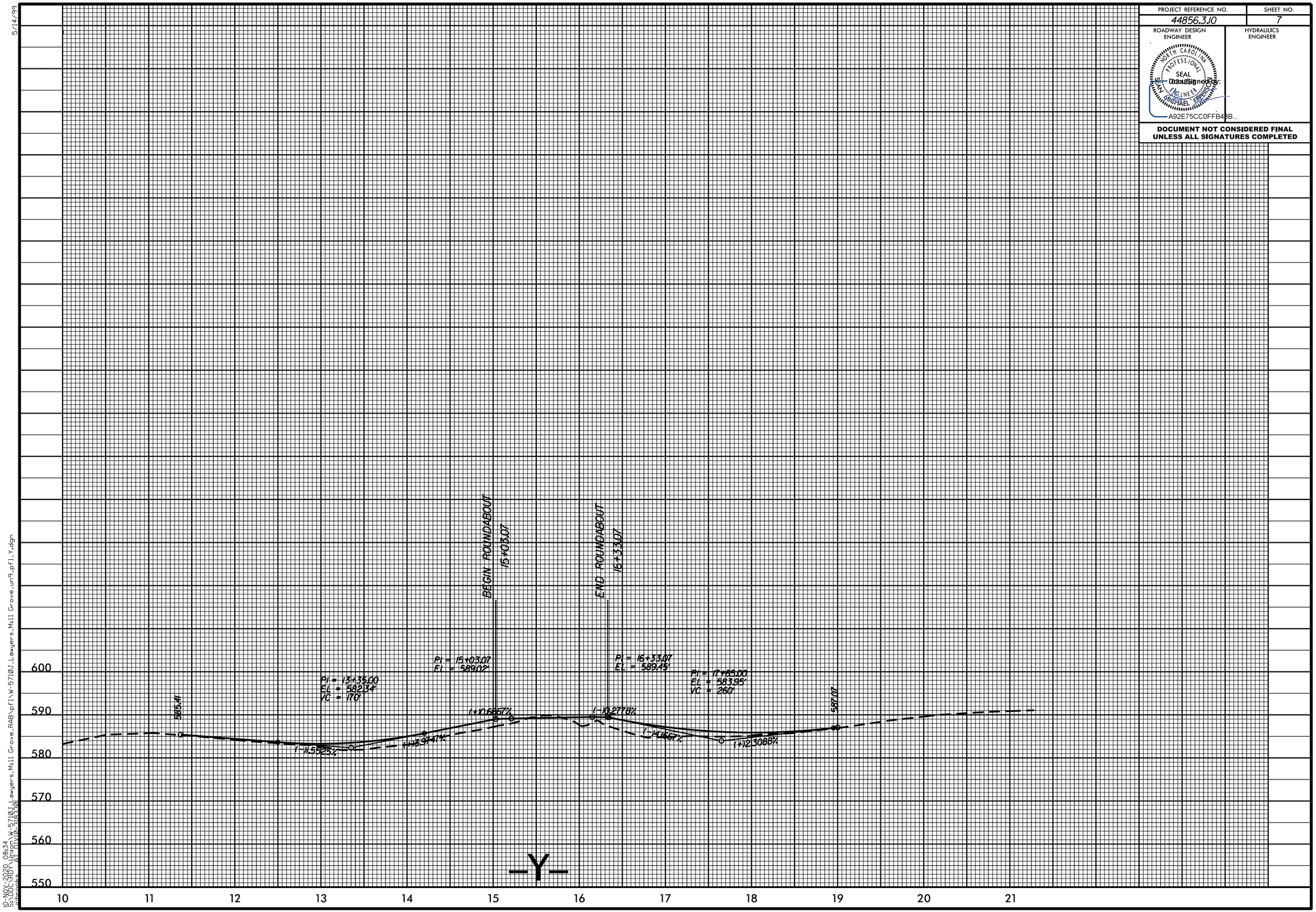

10-NOV-2020 08:34
S:\DDC\ROY\Union\W-5710J_Lawyers_Mill Grove_RAB\pfl\W-5710J_Lawyers_Mill Grove_un9_pfl_Y.dgn
jchooks AT DIV0-3183:30

TIP: W-5710J

PROJECT: 44856.3.10

STATE	STATE PROJECT REFERENCE NO.	SHEET NO.	TOTAL SHEETS
N.C.	44856.3.10	EC-1	

STATE PROJ. NO.	F.A. PROJ. NO.	DESCRIPTION
44856.1.10	HSIP-1004(065)	P.E.
44856.2.10	HSIP-1004(065)	R/W
44856.3.10	HSIP-1004(065)	CONST.

STATE OF NORTH CAROLINA
DIVISION OF HIGHWAYS

PLAN FOR PROPOSED
HIGHWAY EROSION CONTROL

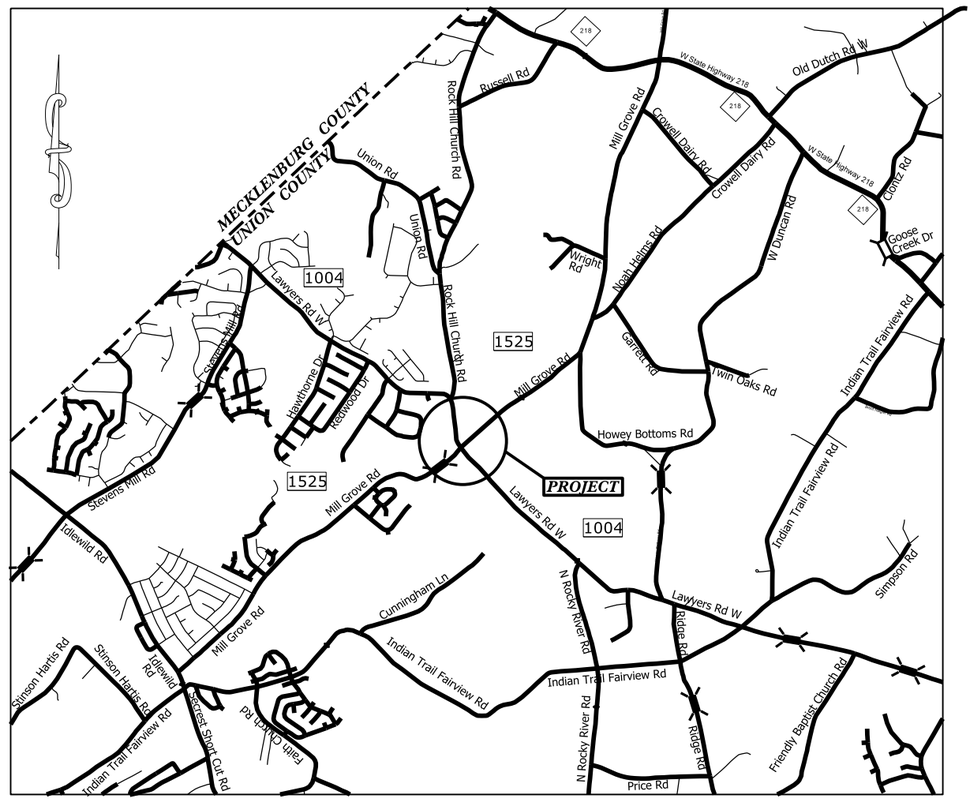

EROSION AND SEDIMENT CONTROL MEASURES

Std. #	Description	Symbol
1630.03	Temporary Silt Ditch	TSD
1630.05	Temporary Diversion	TD
1605.01	Temporary Silt Fence	
1606.01	Special Sediment Control Fence	
1622.01	Temporary Berms and Slope Drains	
1630.02	Silt Basin Type B	
1633.01	Temporary Rock Silt Check Type-A	
	Temporary Rock Silt Check Type-A with Matting and Polyacrylamide (PAM)	
1633.02	Temporary Rock Silt Check Type-B	
	Wattle / Coir Fiber Wattle	SW CFW
	Wattle / Coir Fiber Wattle with Polyacrylamide (PAM)	
1634.01	Temporary Rock Sediment Dam Type-A	
1634.02	Temporary Rock Sediment Dam Type-B	
1635.01	Rock Pipe Inlet Sediment Trap Type-A	
1635.02	Rock Pipe Inlet Sediment Trap Type-B	
1630.04	Stilling Basin	
1630.06	Special Stilling Basin	
	Rock Inlet Sediment Trap:	
1632.01	Type A	A
1632.02	Type B	B
1632.03	Type C	C
	Skimmer Basin	
	Tiered Skimmer Basin	
	Infiltration Basin	

THIS PROJECT HAS BEEN DESIGNED TO SENSITIVE WATERSHED STANDARDS.

HIGH QUALITY WATER(S) EXIST ON THIS PROJECT

High Quality Water Zone(s) Exist
From Sta. 10+00 -L- 10+00 -Y-
to Sta. 22+21.58 -L- 21+28.29 -Y-
Refer To E. C. Special Provisions for Special Considerations.

GRAPHIC SCALE

0
PLANS

0
PROFILE (HORIZONTAL)

0
PROFILE (VERTICAL)

ROADSIDE ENVIRONMENTAL UNIT
DIVISION OF HIGHWAYS
STATE OF NORTH CAROLINA

THESE EROSION AND SEDIMENT CONTROL PLANS COMPLY WITH THE REGULATIONS SET FORTH BY THE NCG-010000 GENERAL CONSTRUCTION PERMIT EFFECTIVE APRIL 1, 2019 ISSUED BY THE NORTH CAROLINA DEPARTMENT OF ENVIRONMENT AND NATURAL RESOURCES DIVISION OF WATER QUALITY.

Prepared In the Office of:

DDC UNIT DIVISION 10
DEPARTMENT OF TRANSPORTATION
DIVISION OF HIGHWAYS

2018 STANDARD SPECIFICATIONS

Designed by:

JASON BROOKS *4369*
NAME *LEVEL III CERTIFICATION NO.*

Roadway Standard Drawings

The following roadway english standards as appear in "Roadway Standard Drawings"- Roadway Design Unit - N. C. Department of Transportation - Raleigh, N. C., dated January 2018 and the latest revison thereto are applicable to this project and by reference hereby are considered a part of these plans.

1604.01	Railroad Erosion Control Detail	1632.01	Rock Inlet Sediment Trap Type A
1605.01	Temporary Silt Fence	1632.02	Rock Inlet Sediment Trap Type B
1606.01	Special Sediment Control Fence	1632.03	Rock Inlet Sediment Trap Type C
1607.01	Gravel Construction Entrance	1633.01	Temporary Rock Silt Check Type A
1622.01	Temporary Berms and Slope Drains	1633.02	Temporary Rock Silt Check Type B
1630.01	Riser Basin	1634.01	Temporary Rock Sediment Dam Type A
1630.02	Silt Basin Type B	1634.02	Temporary Rock Sediment Dam Type B
1630.03	Temporary Silt Ditch	1635.01	Rock Pipe Inlet Sediment Trap Type A
1630.04	Stilling Basin	1635.02	Rock Pipe Inlet Sediment Trap Type B
1630.05	Temporary Diversion	1640.01	Coir Fiber Baffle
1630.06	Special Stilling Basin	1645.01	Temporary Stream Crossing
1631.01	Matting Installation		

20-APR-2020 07:26
J:\Lawyers Mill Grove Intersection\W-5710J_Lawyers_Mill Grove_un9_EC_TSH.dgn
jabrooks AT DOT6-318398

PROJECT REFERENCE NO.	SHEET NO.
44856.3.10	EC-2
R/W SHEET NO.	
ROADWAY DESIGN ENGINEER	HYDRAULICS ENGINEER

MATTING INSTALLATION DETAIL

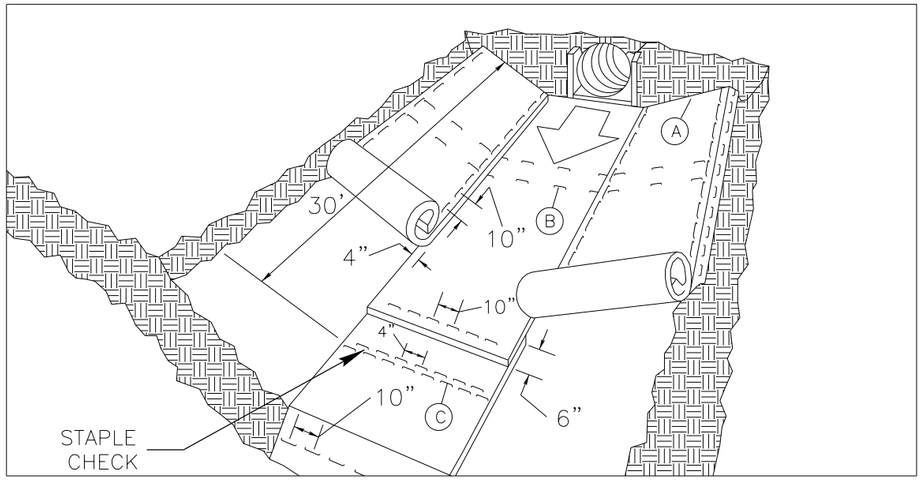

MATTING IN DITCHES

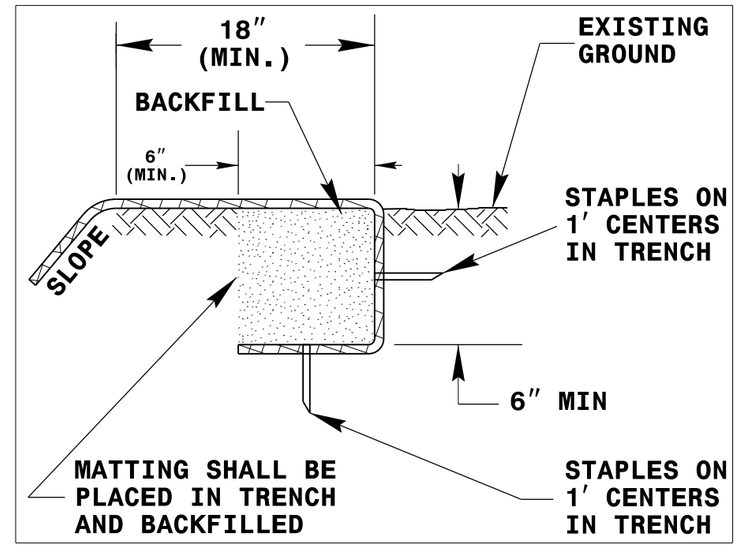

DIAGRAM A

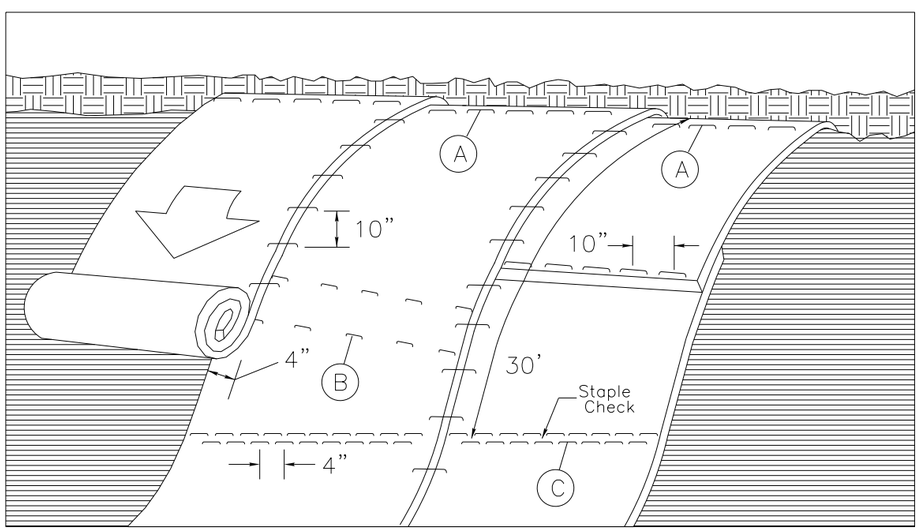

MATTING ON SLOPES

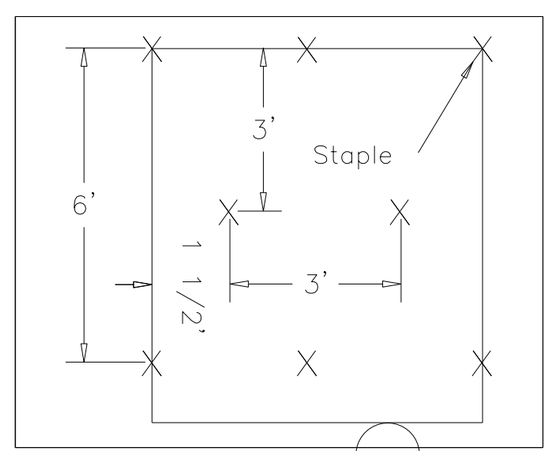

DIAGRAM B

Staple Check Pattern

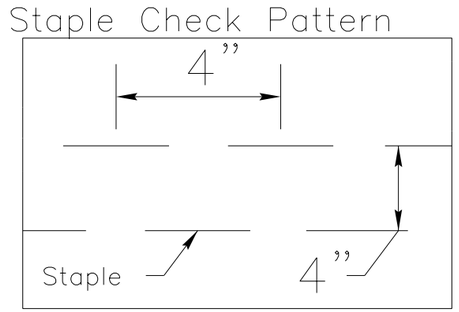

DIAGRAM C

NOTES:

THIS DETAIL APPLIES TO STRAW, EXCELSIOR, AND PERMANENT SOIL REINFORCEMENT MAT (PSRM) INSTALLATION.

STAPLES SHALL BE NO. 11 GAUGE STEEL WIRE FORMED INTO A "U" SHAPE WITH A MINIMUM THROAT WIDTH OF 1 INCH AND NOT LESS THAN 6 INCHES IN LENGTH.

NOT TO SCALE

PROJECT REFERENCE NO.	SHEET NO.
44856.3.10	EC-3
ROADWAY DESIGN ENGINEER	HYDRAULICS ENGINEER

DIVISION OF HIGHWAYS
STATE OF NORTH CAROLINA

SOIL STABILIZATION TIMEFRAMES

SITE DESCRIPTION	STABILIZATION TIME	TIMEFRAME EXCEPTIONS
PERIMETER DIKES, SWALES, DITCHES AND SLOPES	7 DAYS	NONE
HIGH QUALITY WATER (HQW) ZONES	7 DAYS	NONE
SLOPES STEEPER THAN 3:1	7 DAYS	IF SLOPES ARE 10' OR LESS IN LENGTH AND ARE NOT STEEPER THAN 2:1, 14 DAYS ARE ALLOWED.
SLOPES 3:1 OR FLATTER	14 DAYS	7 DAYS FOR SLOPES GREATER THAN 50' IN LENGTH.
ALL OTHER AREAS WITH SLOPES FLATTER THAN 4:1	14 DAYS	NONE, EXCEPT FOR PERIMETERS AND HQW ZONES.

PROJECT NO.	SHEET NO.
44856.3.10	EC-4
F.A. PROJECT NO. HSIP-1004(065)	

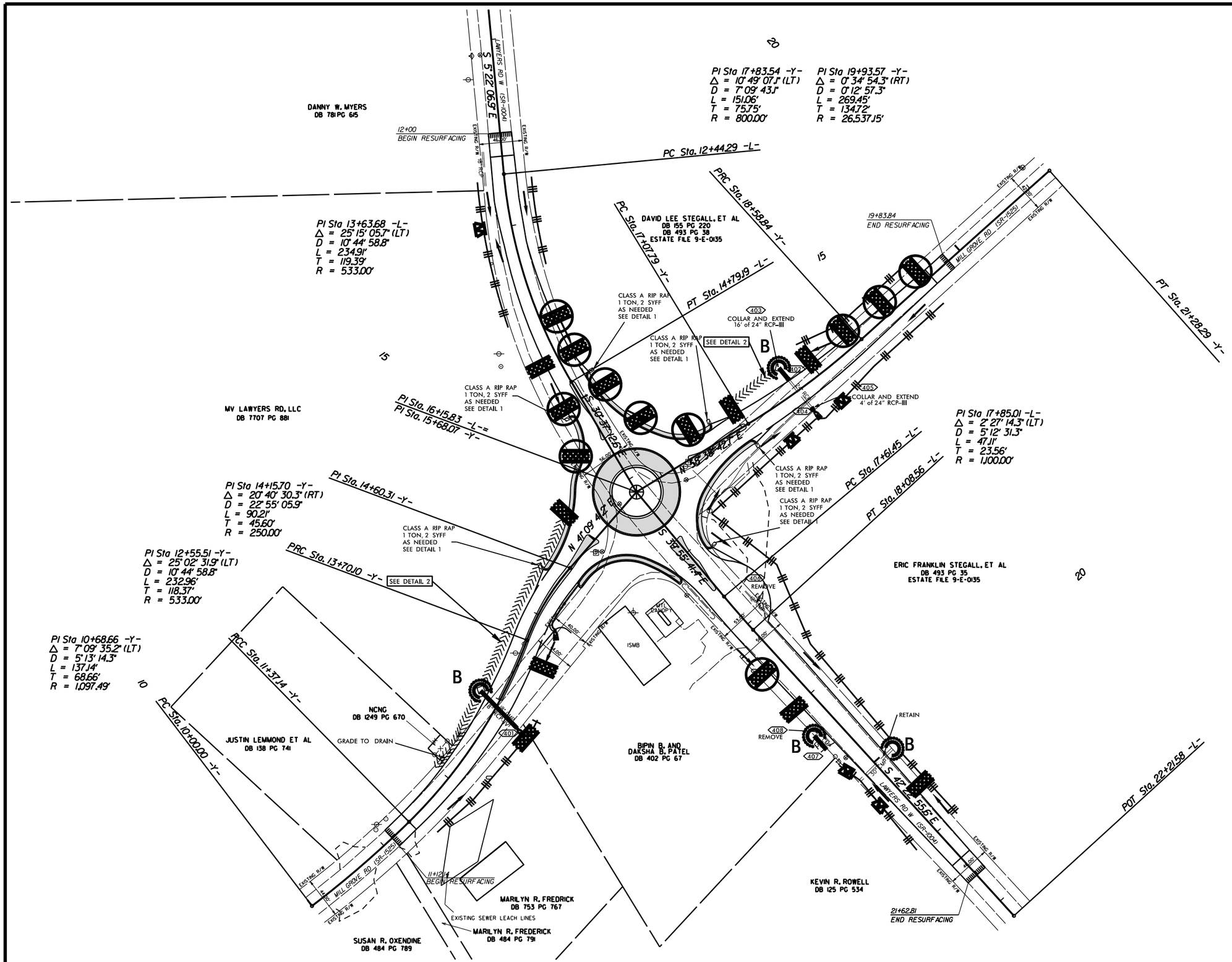

DETAIL 1

(Not to Scale)

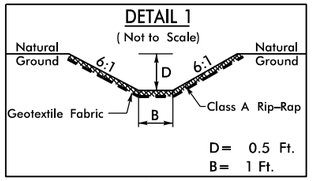

To be placed at the end of Curb Turnouts as directed by the Engineer.

DETAIL 2

CUT DITCH

(Not to Scale)

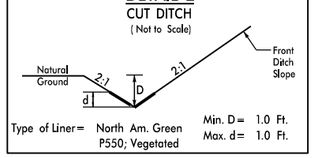

FROM STA. 12+00 -Y- LT TO STA. 15+00 -Y- LT
AND STA. 17+00 -Y- LT TO STA. 17+70 -Y- LT

EROSION CONTROL MEASURES MAY BE CHANGED, IN FIELD AS DIRECTED BY THE ENGINEER.

ROUNDABOUT AT THE INTERSECTION OF LAWYERS RD.(SR-1004) AND MILL GROVE RD.(SR-1525)

		REVISIONS	
SCALE	1"=50'		
DATE	9-2019		
DWG. BY	JCB		
DESIGN BY	JCB		
APPROVED	JDH		

PROJECT NO.	SHEET NO.
44856.3.10	PMP-1
F.A. PROJECT NO. HSIP-1004(065)	

ROADWAY DESIGN ENGINEER

SEAL

Docusigned by:

A92E75CC0FFB43B...

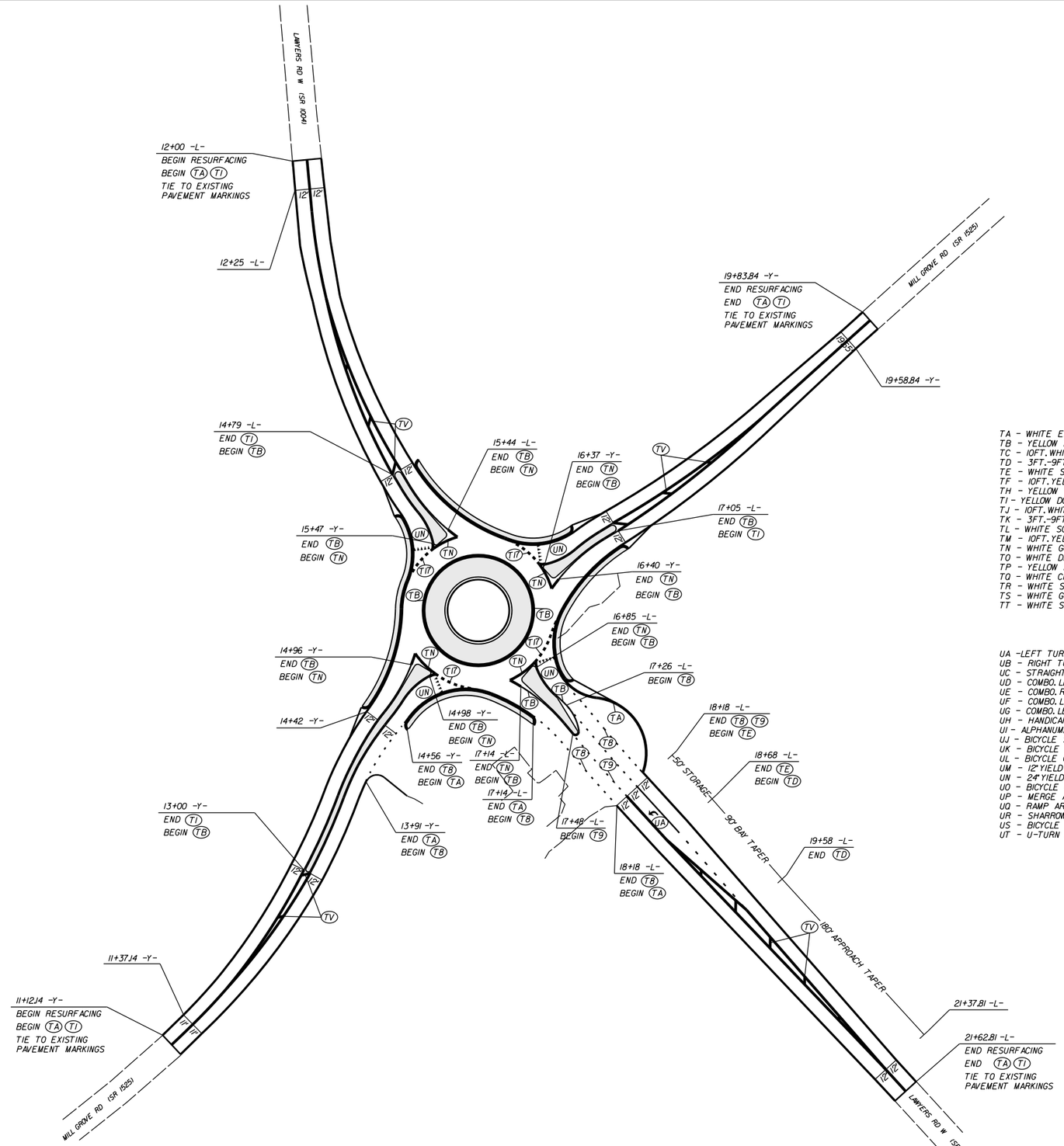

PAVEMENT MARKING SCHEDULE

PAVEMENT MARKING LINES

TA - WHITE EDGELINE (4",90 MIL)
TB - YELLOW EDGELINE (4",90 MIL)
TC - 10FT.WHITE SKIP (4",90 MIL)
TD - 3FT.-9FT./SP WHITE MINISKIP (4",90 MIL)
TE - WHITE SOLID LANE LINE (4",90 MIL)
TF - 10FT.YELLOW SKIP (4",90 MIL)
TH - YELLOW SINGLE CENTER (4",90 MIL)
TI - YELLOW DOUBLE CENTER (4",90 MIL)
TJ - 10FT.WHITE SKIP (6",90 MIL)
TK - 3FT.-9FT./SP WHITE MINISKIP (6",90 MIL)
TL - WHITE SOLID LANE LINE (6",90 MIL)
TM - 10FT.YELLOW SKIP (6",90 MIL)
TN - WHITE GORELINE (8",90 MIL)
TO - WHITE DIAGONAL (8",90 MIL)
TP - YELLOW DIAGONAL (8",90 MIL)
TQ - WHITE CROSSWALK LINE (8",90 MIL)
TR - WHITE SOLID LANE LINE (8",90 MIL)
TS - WHITE GORELINE (12",90 MIL)
TT - WHITE SOLID LANE LINE (12",90 MIL)
TU - WHITE DIAGONAL (12",90 MIL)
TV - YELLOW DIAGONAL (12",90 MIL)
T1 - WHITE LINE,RR X (16",90 MIL)
T2 - WHITE STOPBAR (24",90 MIL)
T3 - WHITE CROSSWALK LINE (24",90 MIL)
T4 - WHITE RUMBLE STRIP (4",240 MIL)
T5 - YELLOW RUMBLE STRIP (4",240 MIL)
T6 - WHITE EDGELINE (6",90 MIL)
T7 - YELLOW EDGELINE (6",90 MIL)
T8 - 2FT.-6FT./SP WHITE MINISKIP (4",90 MIL)
T9 - 2FT.-6FT./SP YELLOW MINISKIP (4",90 MIL)
T10 - 3FT.-3FT./SP WHITE MINISKIP (12",90 MIL)
T11 - 2FT.-6FT./SP WHITE MINISKIP (6",90 MIL)
T12 - 2FT.-6FT./SP YELLOW MINISKIP (6",90 MIL)
T13 - 3FT.-9FT./SP WHITE MINISKIP (8",90 MIL)
T14 - 3FT.-9FT./SP WHITE MINISKIP (12",90 MIL)
T15 - YELLOW SINGLE CENTER (6",90 MIL)
T16 - YELLOW DOUBLE CENTER (6",90 MIL)
T17 - 3FT.-3FT./SP WHITE MINISKIP ENTRANCE LINE (8",90 MIL)

PAVEMENT MARKING SYMBOLS

UA -LEFT TURN ARROW (90 MIL)
UB - RIGHT TURN ARROW (90 MIL)
UC - STRAIGHT ARROW (90 MIL)
UD - COMBO.LEFT/STRAIGHT ARROW (90 MIL)
UE - COMBO.RIGHT/STRAIGHT ARROW (90 MIL)
UF - COMBO.LEFT/RIGHT ARROW (90 MIL)
UG - COMBO.LEFT/RIGHT/STRAIGHT ARROW (90 MIL)
UH - HANDICAP PARKING (90 MIL)
UI - ALPHANUMERIC CHAR. (90 MIL)
UJ - BICYCLE SYMBOL (90 MIL)
UK - BICYCLE STRAIGHT ARROW (90 MIL)
UL - BICYCLE CHAR. (90 MIL)
UM - 12" YIELD LINE TRIANGLE (90 MIL)
UN - 24" YIELD LINE TRIANGLE (90 MIL)
UO - BICYCLE LEFT ARROW (90 MIL)
UP - MERGE ARROW (90 MIL)
UQ - RAMP ARROW SYMBOL (90 MIL)
UR - SHARROW (90 MIL)
US - BICYCLE LOOP DETECTOR (90 MIL)
UT - U-TURN ARROW (90 MIL)
UU - FISH-HOOK STRAIGHT ARROW (90 MIL)
UV - FISH-HOOK LEFT/STRAIGHT ARROW (90 MIL)
UW - FISH-HOOK RIGHT/STRAIGHT ARROW (90 MIL)
UX - FISH-HOOK LEFT/RIGHT ARROW (90 MIL)
UY - FISH-HOOK LEFT/RIGHT/STRAIGHT ARROW (90 MIL)
UZ - FISH-HOOK W/CIRCLE STRAIGHT ARROW (90 MIL)

WA - FISH-HOOK W/CIRCLE LEFT ARROW (90 MIL)
WB - FISH-HOOK W/CIRCLE LEFT/STRAIGHT ARROW (90 MIL)
WC - FISH-HOOK W/CIRCLE LEFT/RIGHT/STRAIGHT ARROW (90 MIL)

MA - PERMANENT RAISED MARKER (YELLOW & YELLOW)
MB - PERMANENT RAISED MARKER (CRYSTAL & RED)
MC - PERMANENT RAISED MARKER (YELLOW & RED)
MD - PERMANENT RAISED MARKER (YELLOW)
ME - SNOWPLOWABLE MARKER (YELLOW & YELLOW)
MF - SNOWPLOWABLE MARKER (CRYSTAL & RED)
MG - SNOWPLOWABLE MARKER (YELLOW & RED)
ML - PERMANENT RAISED MARKER (CRYSTAL & CRYSTAL)
MO - SNOWPLOWABLE MARKER (CRYSTAL & CRYSTAL)

ROUNDABOUT AT THE INTERSECTION OF LAWYERS RD.(SR-1004) AND MILL GROVE RD.(SR-1525)

			REVISIONS	
SCALE	1"=50'			
DATE	9-2019			
DWG. BY	JCB			
DESIGN BY	JCB			
APPROVED	JDH			

T.I.P.: W-5710J

STATE OF NORTH CAROLINA
DEPARTMENT OF TRANSPORTATION

PROJECT REFERENCE NO.	SHEET NO.
W-5710J	SIGN-1

APPROVED: DocuSigned by: Ashley K. Matthews — 40171AA1BC834CD...

DATE: 8/5/2020 | 10:41 AM EDT

SEAL

NORTH CAROLINA PROFESSIONAL SEAL 048105 ENGINEER ASHLEY K. MATTHEWS

DOCUMENT NOT CONSIDERED FINAL UNLESS ALL SIGNATURES COMPLETED

SIGNING PLAN
UNION COUNTY

LOCATION: SR 1004 (LAWYERS RD) AT SR 1525 (MILL GROVE RD) NEAR HEMBY BRIDGE

ROADWAY STANDARD DRAWING

THE FOLLOWING ROADWAY STANDARDS AS APPEAR IN "ROADWAY STANDARD DRAWINGS" - PROJECT SERVICES UNIT - N.C. DEPARTMENT OF TRANSPORTATION - RALEIGH, N.C., DATED JANUARY 2018 ARE APPLICABLE TO THIS PROJECT AND BY REFERENCE HEREBY ARE CONSIDERED A PART OF THESE PLANS:

STD. NO.	TITLE
904.10	ORIENTATION OF GROUND MOUNTED SIGNS
904.50	MOUNTING OF TYPE 'D', 'E' AND 'F' SIGNS ON 'U' CHANNEL POSTS
910.40	SINGLE/TWO LANE ROUNDABOUT WITH PEDESTRIAN

GENERAL NOTES

. SIGNS FURNISHED BY STATE

. CONFIRM IN WRITING AT LEAST 4 MONTHS IN ADVANCE, THE ACTUAL DATE THE DEPARTMENT FURNISHED SIGNS WILL BE REQUIRED.

. IF REMOVAL OR RELOCATION OF SIGNS ON PRIVATE STREET (NON-STATE MAINTAINED) IS REQUIRED DUE TO CONSTRUCTION, THE CONTRACTOR SHALL INFORM THE ENGINEER. THE WORK WILL BE COMPLETED BY OTHERS.

. WHEN NOT STATIONED OR DIMENSIONED ON PLANS, ALL 'E' AND 'F' SIGNS SHALL BE FIELD LOCATED BY THE ENGINEER

. ALL EXISTING SIGNS ON "U" CHANNEL POST WITHIN THE PROJECT LIMITS SHALL BE REMOVED AND DISPOSED OF UNLESS OTHERWISE NOTED ON PLANS.

. WHEN EXISTING SIGNS ARE REMOVED AND INSTALLED ON NEW SUPPORTS, THE RE-ERECTION SHALL IMMEDIATELY FOLLOW THE REMOVAL.

. THE BACKGROUND FOR TYPE E & F SIGNS SHALL BE TYPE C REFLECTIVE SHEETING.

. SEE ROADWAY PLANS FOR GUARD/GUIDE RAIL DETAILS.

SUMMARY OF QUANTITIES

ITEM NO. DESC. NO.	ITEM NO. SECT. NO.	ITEM DESCRIPTION	QUANTITY	UNIT
4072000000	903	SUPPORTS, 3 LB STEEL U-CHANNEL	408	L.F.
4096000000	904	SIGN ERECTION, TYPE D	1	EA
4102000000	904	SIGN ERECTION, TYPE E	29	EA
4116100000	904	SIGN ERECTION, RELOCATE TYPE E	1	EA
4115400000	907	STOCKPILE SIGN SYSTEM, U-CHANNEL	2	EA
4155000000	907	DISPOSAL OF SIGN SYSTEM, U-CHANNEL	10	EA
4192000000	907	DISPOSAL OF SUPPORT, U-CHANNEL	1	EA

PROJECT NOTES

1 DISPOSAL OF SIGN SYSTEM, U-CHANNEL
2 RELOCATE SIGN, TYPE E
3 DISPOSAL OF SUPPORT, U-CHANNEL
4 STOCKPILE SIGN SYSTEM, FLASHER

INDEX

SHEET NO.	DESCRIPTION
SIGN-1	TITLE SHEET
SIGN-2	TYPE 'E' SIGNS
SIGN-3	SIGN DESIGN DETAILS
SIGN-4	EXISTING SIGNING PLAN SHEET
SIGN-5	PROPOSED SIGNING PLAN SHEET

PLAN PREPARED BY: N.C.D.O.T. SIGNING AND DELINEATION UNIT

Kelvin L. Jordan SIGNING & DELINEATION REGIONAL ENGINEER

Ashley K. Matthews, PE SIGNING & DELINEATION PROJECT DESIGN ENGINEER

STATE OF NORTH CAROLINA DEPARTMENT OF TRANSPORTATION

05/14/20
S:\S&DU\Western Region\Div 10\W-5710J\W-5710J_sgn.dgn
USERKONTHEWS

PROJECT REFERENCE NO.	SHEET NO.
W-5710J	SIGN-2

APPROVED: DocuSigned by: Ashley K. Matthews 40171AA1BC834CD...

DATE: 8/5/2020 | 10:41 AM EDT

SEAL

NORTH CAROLINA PROFESSIONAL SEAL 048105 ENGINEER ASHLEY K. MATTHEWS

DOCUMENT NOT CONSIDERED FINAL UNLESS ALL SIGNATURES COMPLETED

401 QUANTITY REQ'D 4

36 X 36
W2-6

ONE "U" POST PER SIGN

406 QUANTITY REQ'D 1

24 X 30
R4-7

ONE "U" POST PER SIGN

402 QUANTITY REQ'D 2

30 X 8
W16-8

SEE DETAIL ON SIGN-3

MOUNT BELOW SIGN 401
IN 2 INSTALLATIONS

407 QUANTITY REQ'D 4

30 X 24
R4-6

ONE "U" POST PER SIGN

403 QUANTITY REQ'D 4

36 X 36
W3-2a

ONE "U" POST PER SIGN

408 QUANTITY REQ'D 2

30 X 36
R2-1

ONE "U" POST PER SIGN

404 QUANTITY REQ'D 8

36 X 36 X 36
R1-2

ONE "U" POST PER SIGN

409 QUANTITY REQ'D 1

30 X 36
R2-1

ONE "U" POST PER SIGN

405 QUANTITY REQ'D 2

36 X 8
W16-8

SEE DETAIL ON SIGN-3

MOUNT BELOW SIGN 401
IN 2 INSTALLATIONS

410 QUANTITY REQ'D 1

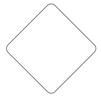

18 X 18
OM1-3

MOUNT BELOW SIGN 406
IN 1 INSTALLATIONS

TYPE "E" SIGNS

05/14/20
S:\SDU\Western Region\Div 10\W-5710J\W-5710J_sgn.dgn
User:kmatthews

PROJECT REFERENCE NO.	SHEET NO.
W-5710J	SIGN-3

APPROVED: DocuSigned by: Ashley K. Matthews — 4D171AAf8C834CD...

DATE: 8/5/2020 | 10:41 AM EDT

SEAL

NORTH CAROLINA PROFESSIONAL SEAL 048105 ENGINEER ASHLEY K. MATTHEWS

DOCUMENT NOT CONSIDERED FINAL UNLESS ALL SIGNATURES COMPLETED

SIGN NUMBER: 301
TYPE: D
QUANTITY: 1
SIGN WIDTH: 7'-0"
HEIGHT: 2'-0"
TOTAL AREA: 14.0 Sq.Ft.
BORDER TYPE: FLUSH
RECESS: 0"
WIDTH: 1"
RADII: 3"
NO. Z BARS:
LENGTH:

BACKG COLOR: Green
COPY COLOR: White

SYMBOL	X	Y	WID	HT

MAT'L: 0.125" (3.2 mm) ALUMINUM

DESIGN BY: AKM CHECKED BY: KLJ May 04, 2020
PROJECT ID: W-5710J DIV: 10

USE NOTES:

1. Legend and border(except those that are colored black) shall be direct applied Grade C sheeting.
2. Background shall be Grade C reflective sheeting.

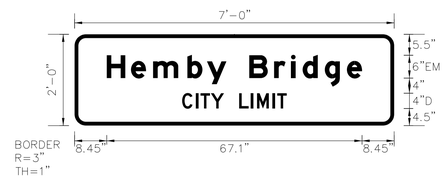

Spacing Factor is 1 unless specified otherwise

LETTER POSITIONS

Letter spacings are to start of next letter

																																				Series/Size Text Length
		H	e	m	b	y		B	r	i	d	g	e																							EM 2000
	8.5	6.4	5.8	9	5.2	5.1	6	6.5	4.4	3.1	5.8	5.8	4	8.5																						67.1
		C	I	T	Y		L	I	M	I	T																									D 2000
	28.3	3.6	1.2	2.7	3.4	4	3.1	1.6	4.1	1.2	2.5	28.3																								27.5

FILENAME: Guidsign_English

NORTH CAROLINA D.O.T. SIGN DETAIL

SIGN NUMBER: 402
TYPE: E
QUANTITY: 2
SIGN WIDTH: 2'-6"
HEIGHT: 0'-8"
TOTAL AREA: 1.7 Sq.Ft.
BORDER TYPE: RECESS
RECESS: 0.38"
WIDTH: 0.38"
RADII: 1.5"
NO. Z BARS:
LENGTH:

BACKG COLOR: Yellow
COPY COLOR: Black

SYMBOL	X	Y	WID	HT

MAT'L: 0.125" (3.2 mm) ALUMINUM

DESIGN BY: AKM CHECKED BY: KLJ May 13, 2020
PROJECT ID: W-5710J DIV: 10

USE NOTES:

1. Legend and border(except those that are colored black) shall be direct applied Grade C sheeting.
2. Background shall be Grade C reflective sheeting.

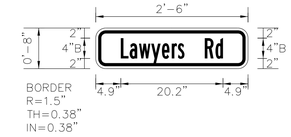

Spacing Factor is 1 unless specified otherwise

LETTER POSITIONS

Letter spacings are to start of next letter

																																				Series/Size Text Length
		L	a	w	y	e	r	s		R	d																									B 2000
	4.9	1.8	1.8	2.4	2.1	1.9	1.2	1.3	4	2.1	1.5	4.9																								20.2

FILENAME: Guidsign_English

NORTH CAROLINA D.O.T. SIGN DETAIL

SIGN NUMBER: 405
TYPE: E
QUANTITY: 2
SIGN WIDTH: 2'-6"
HEIGHT: 0'-8"
TOTAL AREA: 1.7 Sq.Ft.
BORDER TYPE: RECESS
RECESS: 0.38"
WIDTH: 0.38"
RADII: 1.5"
NO. Z BARS:
LENGTH:

BACKG COLOR: Yellow
COPY COLOR: Black

SYMBOL	X	Y	WID	HT

MAT'L: 0.125" (3.2 mm) ALUMINUM

DESIGN BY: AKM CHECKED BY: KLJ May 13, 2020
PROJECT ID: W-5710J DIV: 10

USE NOTES:

1. Legend and border(except those that are colored black) shall be direct applied Grade C sheeting.
2. Background shall be Grade C reflective sheeting.

Spacing Factor is 1 unless specified otherwise

LETTER POSITIONS

Letter spacings are to start of next letter

																																				Series/Size Text Length
		M	i	l	l		G	r	o	v	e		R	d																						B 2000
	3	2.7	1.2	1.2	0.5	3	2.4	1.3	1.8	2	1.5	3	2.1	1.5	3																					24.1

FILENAME: Guidsign_English

NORTH CAROLINA D.O.T. SIGN DETAIL

SIGN DESIGN DETAILS

05/14/20
S:\S&DU\Western Region\Div 10\W-5710J\W-5710J_sgn.dgn
User:bkgnatiews

TIP NO.	SHEET NO.
W-5710J	SIGN-4

APPROVED: DocuSigned by: Ashley K. Matthews 40171AA1BCB34CD...

DATE: 8/5/2020 | 10:41 AM EDT

SEAL

NORTH CAROLINA PROFESSIONAL SEAL 048105 ENGINEER ASHLEY K. MATTHEWS

DOCUMENT NOT CONSIDERED FINAL UNLESS ALL SIGNATURES COMPLETED

PROJECT NOTES

1 DISPOSAL OF SIGN SYSTEM, U-CHANNEL
2 RELOCATE SIGN, TYPE E
3 DISPOSAL OF SUPPORT, U-CHANNEL
4 STOCKPILE SIGN SYSTEM, U-CHANNEL

EXISTING SIGNS

05/14/20
S:\S&DU\Western Region\Div 10\W-5710J\W-5710J_sgn.dgn
User:akmatthews

PROJECT REFERENCE NO.	SHEET NO.
W-5710J	SIGN-5

APPROVED: DocuSigned by: Ashley K. Matthews 40171AA1BC834CD...

DATE: 8/5/2020 | 10:41 AM EDT

SEAL

NORTH CAROLINA PROFESSIONAL SEAL 048105 ENGINEER ASHLEY K. MATTHEWS

DOCUMENT NOT CONSIDERED FINAL UNLESS ALL SIGNATURES COMPLETED

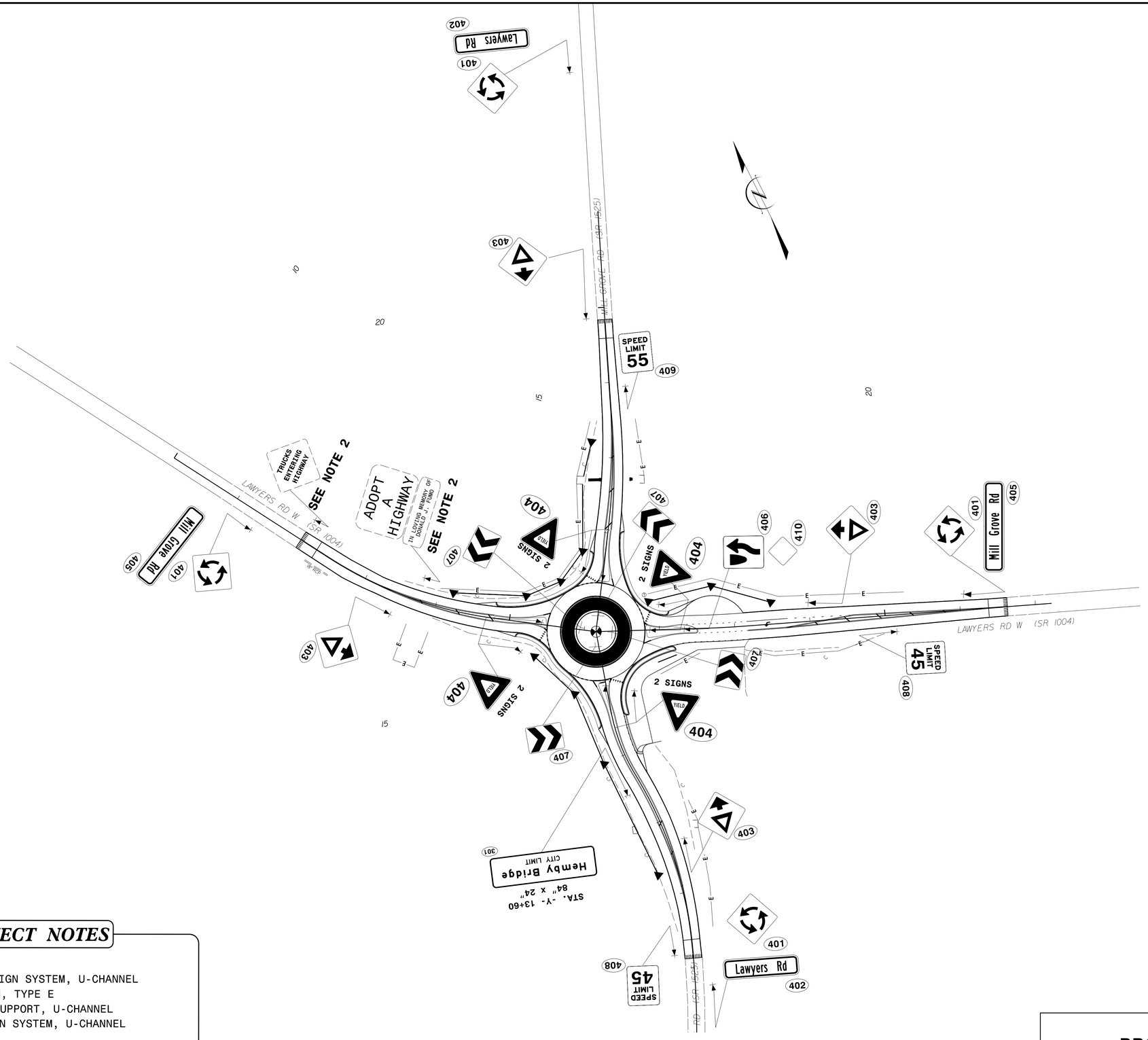

PROJECT NOTES

1 DISPOSAL OF SIGN SYSTEM, U-CHANNEL
2 RELOCATE SIGN, TYPE E
3 DISPOSAL OF SUPPORT, U-CHANNEL
4 STOCKPILE SIGN SYSTEM, U-CHANNEL

PROPOSED SIGNS

8/17/99

05/14/20
S:\S&CU\Western Region\Div 10\W-5710J\W-5710J_sgn.dgn
User:kmatthews

PROJECT NO.	SHEET NO.
44856.3.10	TCP-1
F.A. PROJECT NO. HSIP-1004(065)	

ROADWAY DESIGN ENGINEER

NORTH CAROLINA PROFESSIONAL SEAL 034357 ENGINEER SEAN MICHAEL EDWARDS

DocuSigned by:
A92E75CC0FFB43E...

OFFSITE DETOUR

OFFSITE DETOUR TO BE INSTALLED AND MAINTAINED BY NCDOT.
THE CONTRACTOR IS RESPONSIBLE FOR THE BARRACADES ON THE PROJECT. SEE SHEET TCP-2

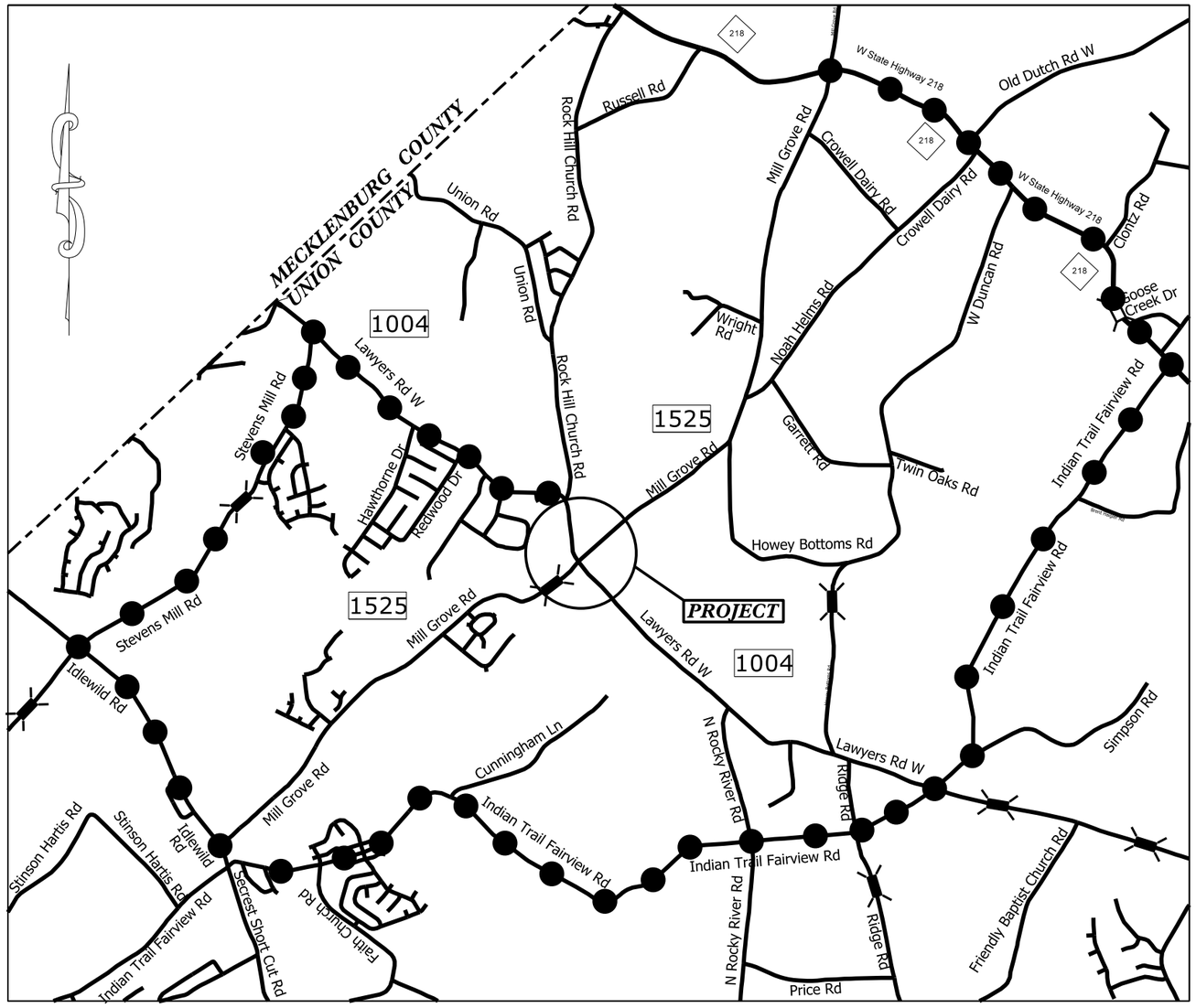

NOTE: CONTRACTOR SHALL CONTACT
SALINA BLALOCK AT 704-244-8270
TWO WEEKS PRIOR TO ROAD CLOSURE.

DETOUR ROUTE

ROUNDABOUT AT THE INTERSECTION OF
LAWYERS RD.(SR-1004) AND
MILL GROVE RD.(SR-1525)

		REVISIONS	
SCALE	N/A		
DATE	9-2020		
DWG. BY	JCB		
DESIGN BY	JCB		
APPROVED	JDH		

PROJECT NO.	SHEET NO.
44856.3.10	UC-1
F.A. PROJECT NO. HSIP-1004(065)	

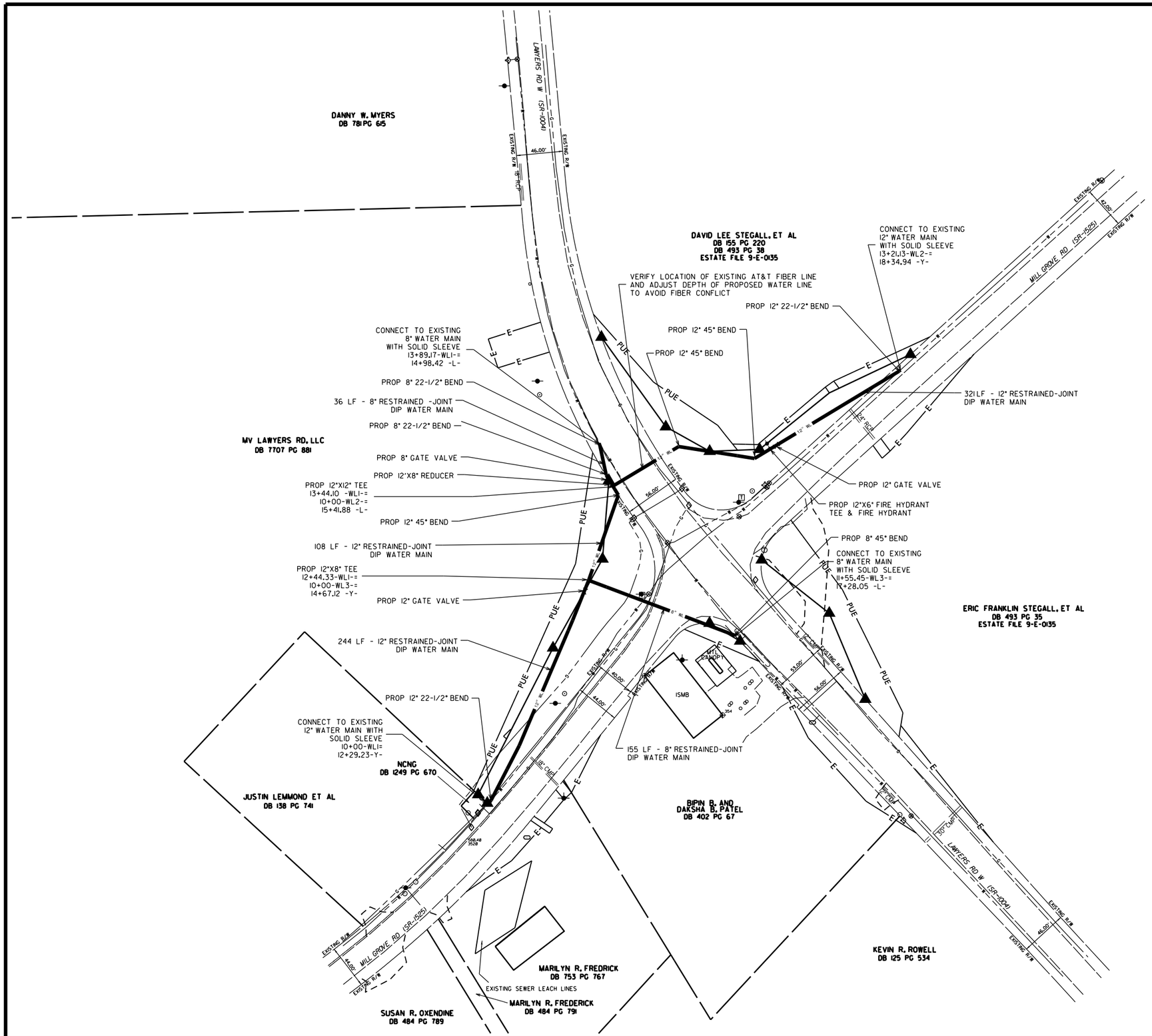

GENERAL NOTES:

-CONTACT MICHAEL CALDWELL OF UNION COUNTY PUBLIC WORKS 72 HOURS PRIOR TO BEGINNING WORK ON THIS PROPOSED WATER MAIN AT (704) 968-4150.

-PRIOR TO WATER LINE CONSTRUCTION, THE CONTRACTOR MUST SUBMIT TO UNION COUNTY THE PROPOSED UTILITY MATERIAL SUBMITTAL'S AND SHOP DRAWINGS, AS APPLICABLE FOR REVIEW AND OBTAIN UNION COUNTY APPROVAL OF UTILITY MATERIAL SUBMITTAL'S AND SHOP DRAWINGS

-WATER VALVES ARE TO BE OPERATED BY UNION COUNTY PUBLIC WORKS STAFF.

-THE PROPOSED WATER LINE CONSTRUCTION SHALL MEET THE APPLICABLE REQUIREMENTS OF THE NC DEPARTMENT OF TRANSPORTATION "STANDARD SPECIFICATIONS FOR ROADS AND STRUCTURES" DATED JANUARY 2018; UNION COUNTY'S "SANITARY SEWER AND WATER SPECIFICATIONS" AND "STANDARD DETAILS" -REVISION #6 DATED NVEMBER 8, 2014; AND THE NOTES AND DETAILS PROVIDED IN THE CONSTRUCTION PLANS.

-WATER PIPE IS TO BE PC 350 DUCTILE IRON PIPE.

-ENTIRE LENGTH OF RELOCATED WATER MAIN MUST BE RESTRAINED JOINT.

-ALL SLEEVES MUST BE OF THE RESTRAINED JOINT TYPE.

-FIELD-LOCKING GASKETS ARE ALLOWABLE AS RESTRAINING DEVICES FOR WATER PIPE.

-CONTRACTOR IS TO USE TEMP. PLUGS AND BLOW OFFS FOR TESTING & DISINFECTION.

-DUE TO FOUR REQUIRED TIE-INS, CONTRACTOR TO COORDINATE WITH UNION COUNTY FIELD REPRESENTATIVE TO DEVISE A PLAN FOR SYSTEMATIC TIE-INS TO MINIMIZE WATER SERVICE OUTAGES.

-SHUT DOWN WILL BE LIMITED TO A MAXIMUM OF FOUR HOURS. PROVIDE 96 HOURS ADVANCE NOTICE TO UNION COUNTY PRIOR TO SHUT DOWN OF WATER MAIN.

-CONTRACTOR SHALL PROVIDE A PLAN FOR BLOCKING AT ALL TIE-IN LOCATIONS. PLAN MUST BE APPROVED BY UNION COUNTY REPRESENTATIVE PRIOR TO PERFORMING WORK.

-THE NEW WATER MAIN MUST BE AT LEAST 3 FEET BELOW THE PROPOSED EDGE OF PAVEMENT AND PROVIDE A MINIMUM 3 FEET OF COVER AT ALL TIMES.

-WATER FOR TESTING WILL BE PROVIDED BY UNION COUNTY. TEST SHALL BE REPEATED UNTIL TEST RESULTS ARE SATISFACTORY.

-SAMPLES FOR BACTERIOLOGICAL TESTING WILL BE COLLECTED BY UNION COUNTY PERSONNEL AND TESTED AT K&W LABORATORIES IN MIDLAND, NC. SAMPLES WILL TYPICALLY BE COLLECTED ONLY ON WEDNESDAYS. EACH SAMPLE WILL COST $50.00 TO TEST, PAYABLE BY CONTRACTOR. REQUEST FOR SAMPLES COLLECTION MUST BE MADE AT LEAST 48 HOURS IN ADVANCE OF THE SAMPLE COLLECTION - COORDINATE WITH UNION COUNTY FIELD REPRESENTATIVE. SAMPLE RESULTS WILL BE AVAILABLE NO SOONER THAN 24 HOURS AFTER THE SAMPLES ARE DELIVERED TO THE LAB.

ROUNDABOUT AT THE INTERSECTION OF
LAWYERS RD. (SR-1004) AND
MILL GROVE RD. (SR-1525)

SCALE	1"=50'	REVISIONS
DATE	2-2020	
DWG. BY	JCB	
DESIGN BY	JDH	
APPROVED	JDH	

PROJECT REFERENCE NO.	SHEET NO.
44856.3.10	UC-2
ROADWAY DESIGN ENGINEER	HYDRAULICS ENGINEER

DOCUMENT NOT CONSIDERED FINAL UNLESS ALL SIGNATURES COMPLETED

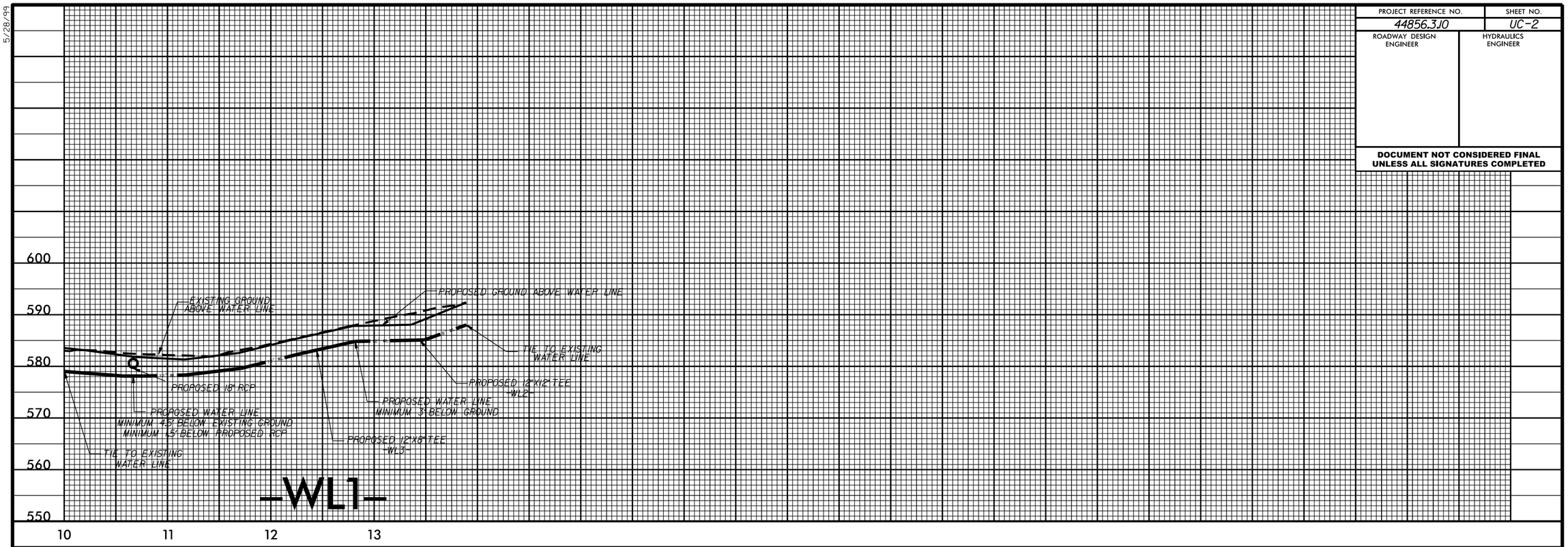

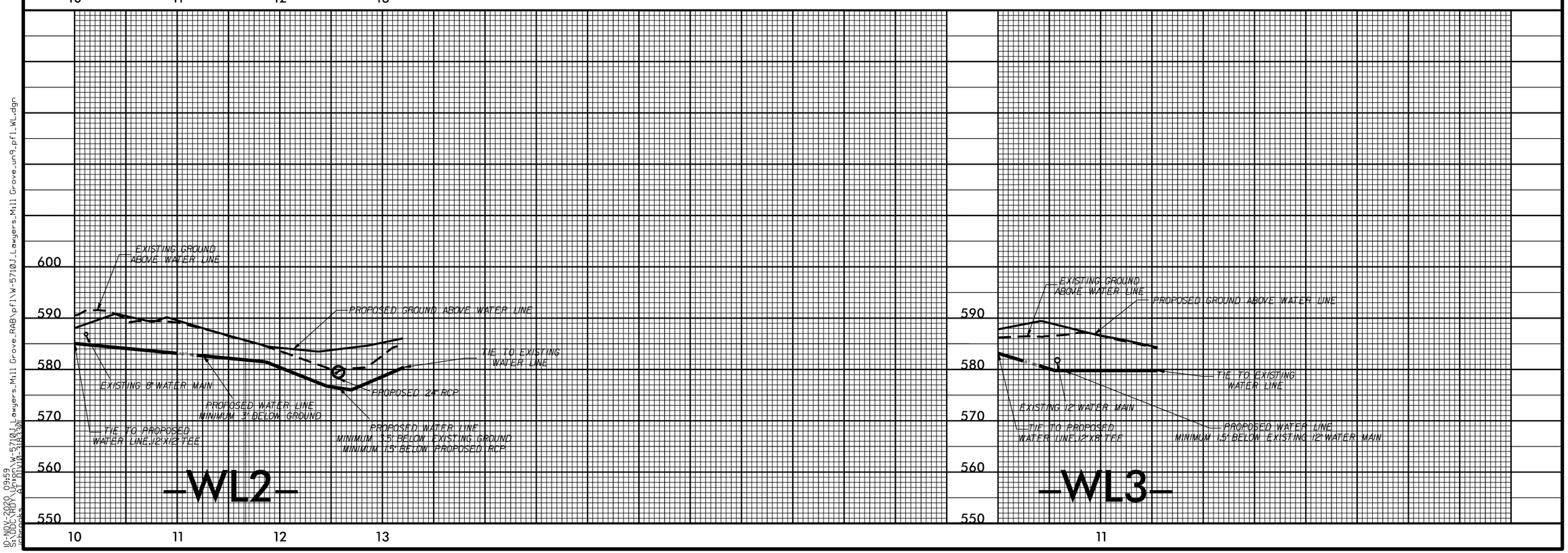

5/28/99

10-NOV-2020 09:59
S:\DDC\ROY\Dnrg\W-5710J_Lawyers_Mill Grove_RAB\pfl\W-5710J_Lawyers_Mill Grove_un9_pfl_WL.dgn
jcbrooks AT DWD-3183.30

PROJECT NO.	SHEET NO.
44856.3.10	UC-3
F.A. PROJECT NO. HSIP-1004(065)	

NOTE:
A 27" DIAMETER PRE-CAST RING SHALL BE PLACED AROUND EACH VALVE BOX.

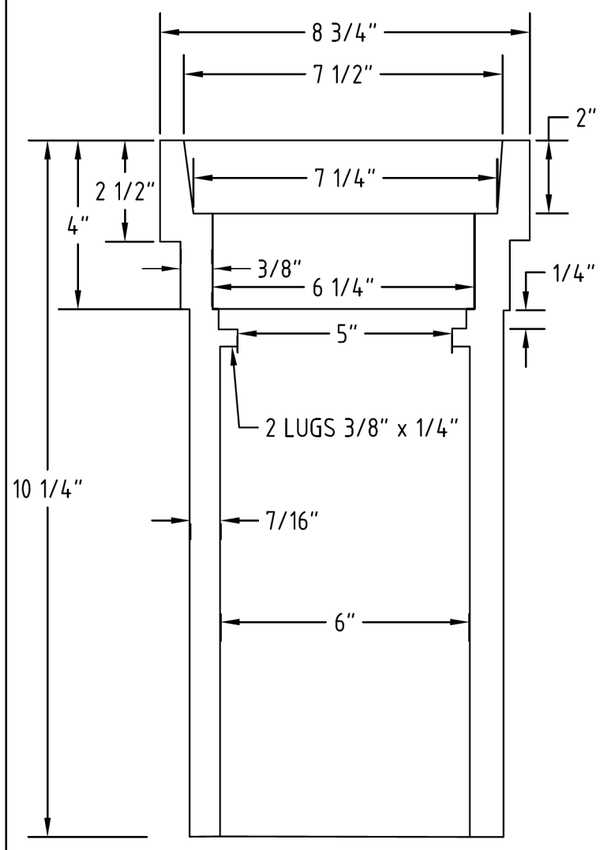

TOP

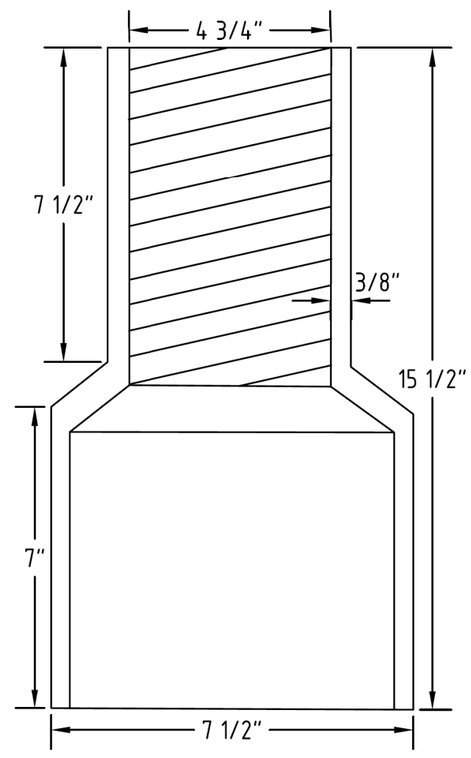

BOTTOM
(SCREW TYPE)

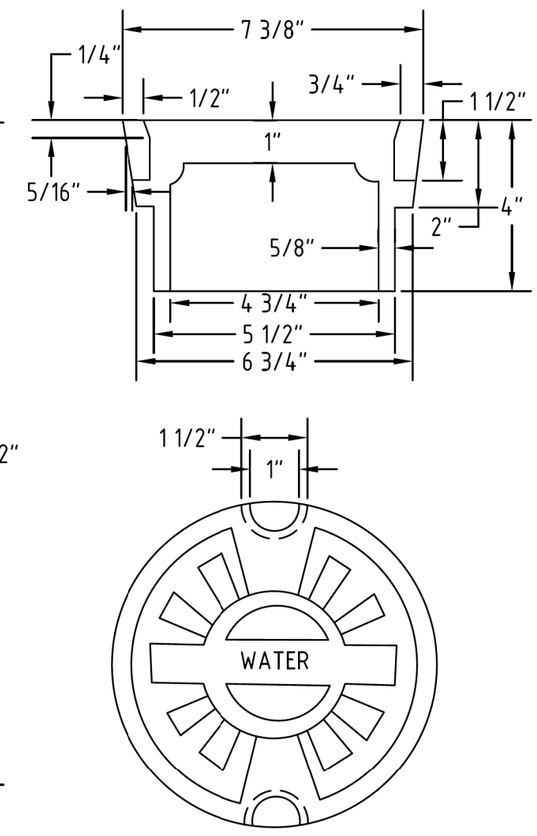

COVER

UNION COUNTY PUBLIC WORKS DEPARTMENT UNION COUNTY, N.C.	STANDARD DETAIL VALVE BOX	SCALE: N.T.S. DATE: 11-17-06	1

ROUNDABOUT AT THE INTERSECTION OF
LAWYERS RD.(SR-1004) AND
MILL GROVE RD.(SR-1525)

		REVISIONS	
SCALE	1"=50'		
DATE	6-2022		
DWG. BY	TBL		
DESIGN BY	TBL		
APPROVED	JDH		

PROJECT NO.	SHEET NO.
44856.3.10	UC-3A
F.A. PROJECT NO. HSIP-1004(065)	

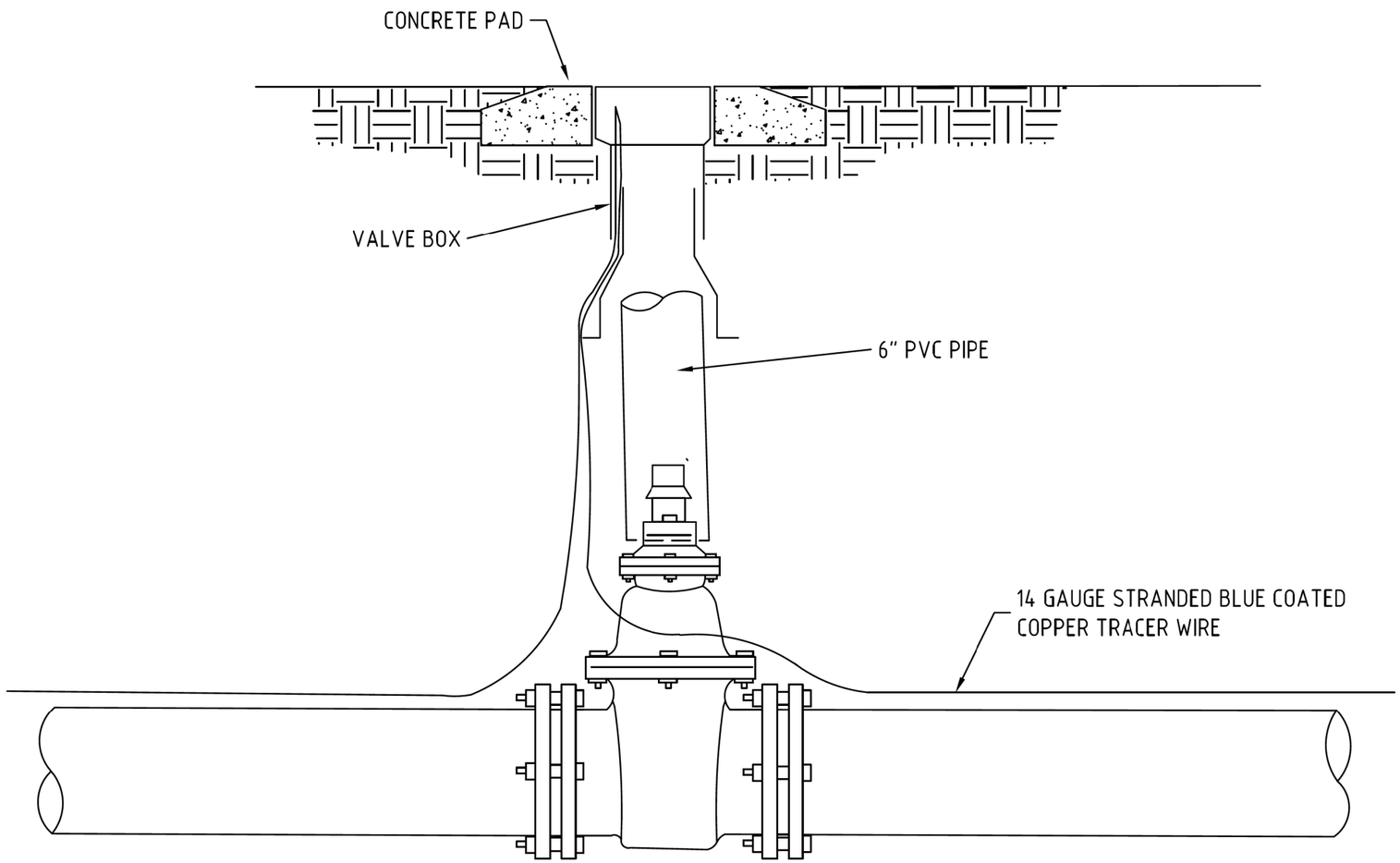

UNION COUNTY PUBLIC WORKS DEPARTMENT
UNION COUNTY, N.C.

STANDARD DETAIL

VALVE BOX INSTALLATION

SCALE: N.T.S.
DATE: 10-4-11

1A

ROUNDABOUT AT THE INTERSECTION OF
LAWYERS RD.(SR-1004) AND
MILL GROVE RD.(SR-1525)

		REVISIONS	
SCALE	1"=50'		
DATE	6-2022		
DWG. BY	TBL		
DESIGN BY	TBL		
APPROVED	JDH		

PROJECT NO.	SHEET NO.
44856.3.10	UC-3B
F.A. PROJECT NO. HSIP-1004(065)	

PAINT COLORS

BODY.....FIRE HYDRANT RED - RUST-OLEUM ENAMEL # 1210 FIRE HYDRANT RED
BONNET.....HIGH GLOSS WHITE - RUST-OLEUM ENAMEL # 2766
CAPS.....HIGH GLOSS WHITE - RUST-OLEUM ENAMEL # 2766

HYDRANTS TO BE SET AT EDGE OF R/W AT PROPERTY CORNERS

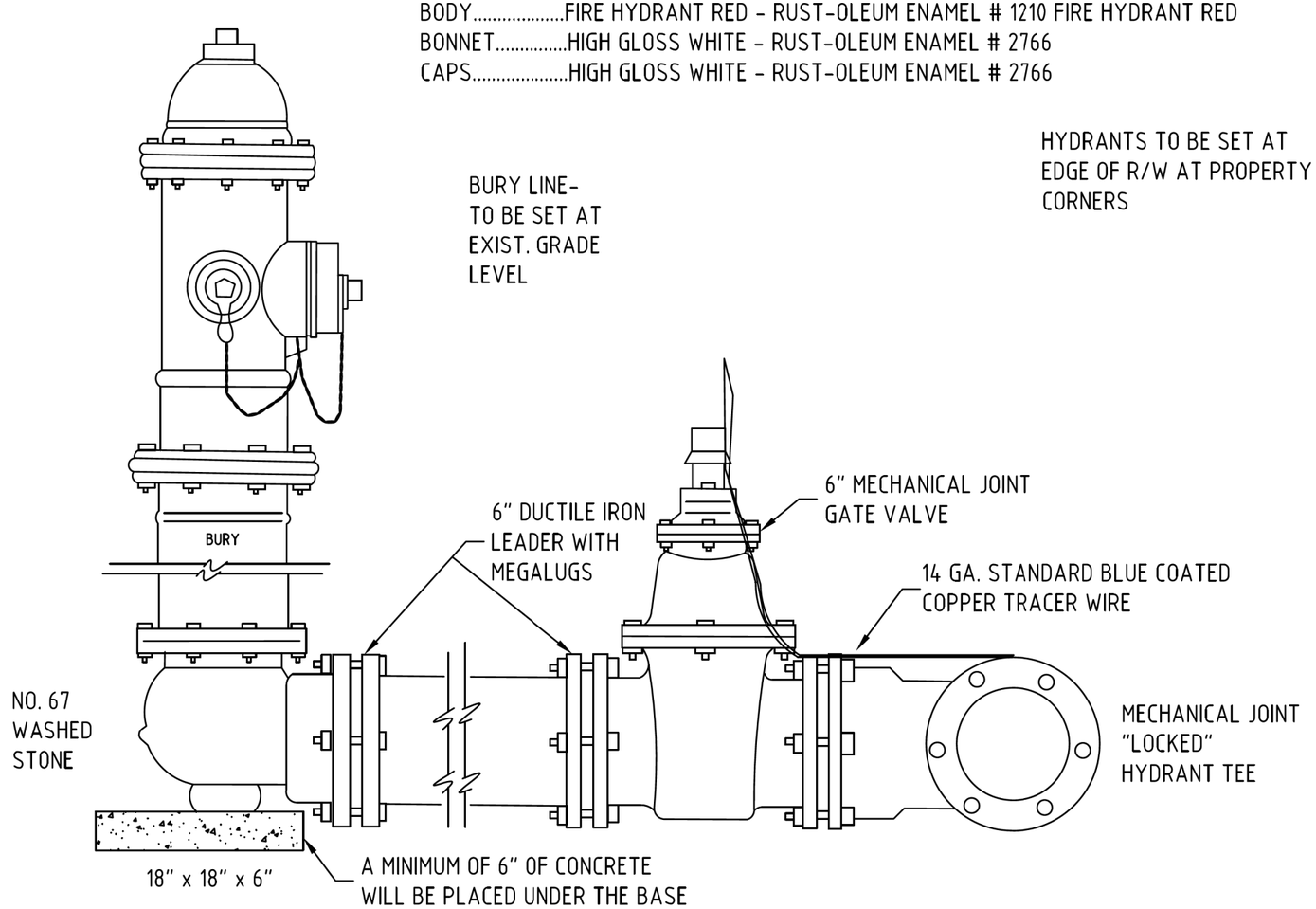

UNION COUNTY PUBLIC WORKS DEPARTMENT UNION COUNTY, N.C.	STANDARD DETAIL FIRE HYDRANT INSTALLATION	SCALE: N.T.S. DATE: 1-2-14	3

ROUNDABOUT AT THE INTERSECTION OF
LAWYERS RD.(SR-1004) AND
MILL GROVE RD.(SR-1525)

		REVISIONS
SCALE	1"=50'	
DATE	6-2022	
DWG. BY	TBL	
DESIGN BY	TBL	
APPROVED	JDH	

PROJECT NO.	SHEET NO.
44856.3.10	UC-3C
F.A. PROJECT NO. HSIP-1004(065)	

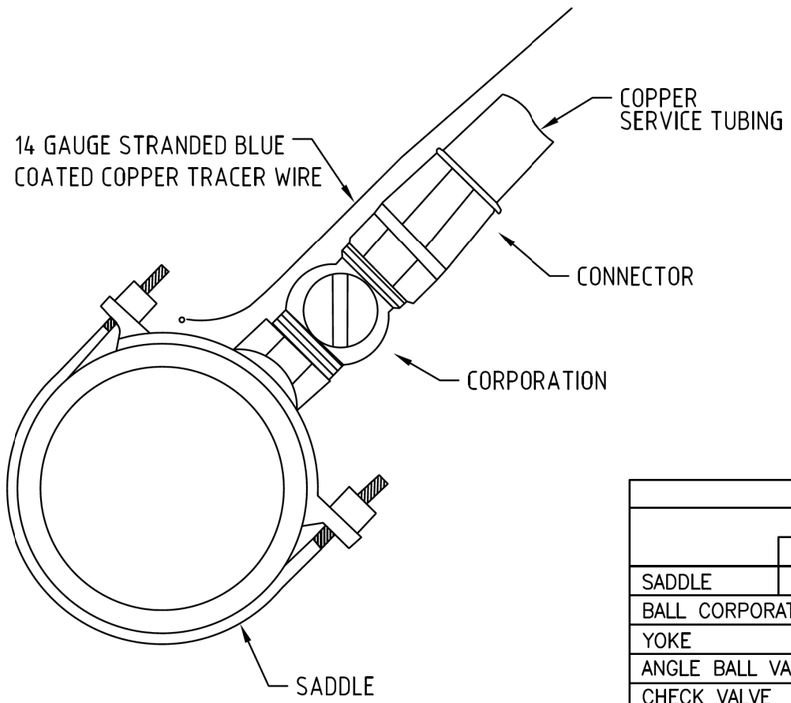

APPROVED SERVICE HARDWARE			
		MUELLER	FORD
	2"PVC	H-13420	S70
SADDLE	UP TO 8"	SEE NOTE	FC 101
BALL CORPORATION		B-25008	FB1000G
YOKE		H-5020	Y 502
ANGLE BALL VALVE		B-24273	BA94-323WG
CHECK VALVE		H-14247-A	HHS91-323
CONNECTORS	COPPER	STYLE 110	GRIP JOINT
EXPANSION CONNECTION			EC 23

NOTE:
ROMAC 101N SHALL REPLACE MUELLER FOR PIPE DIAMETER UP TO 8"

SMITH BLAIR 317, FORD FC 202 OR ROMAC 202N SHALL REPLACE MUELLER FOR PIPE DIA. 12" AND UP

UNION COUNTY PUBLIC WORKS DEPARTMENT
UNION COUNTY, N.C.

STANDARD DETAIL

SERVICE CONNECTION

SCALE: N.T.S.
DATE: 10-4-11

5

ROUNDABOUT AT THE INTERSECTION OF LAWYERS RD.(SR-1004) AND MILL GROVE RD.(SR-1525)

		REVISIONS	
SCALE	1"=50'		
DATE	6-2022		
DWG. BY	TBL		
DESIGN BY	TBL		
APPROVED	JDH		

6/23/16

0 2.5 5	PROJ. REFERENCE NO.	SHEET NO.
	44856.3.10	X-1

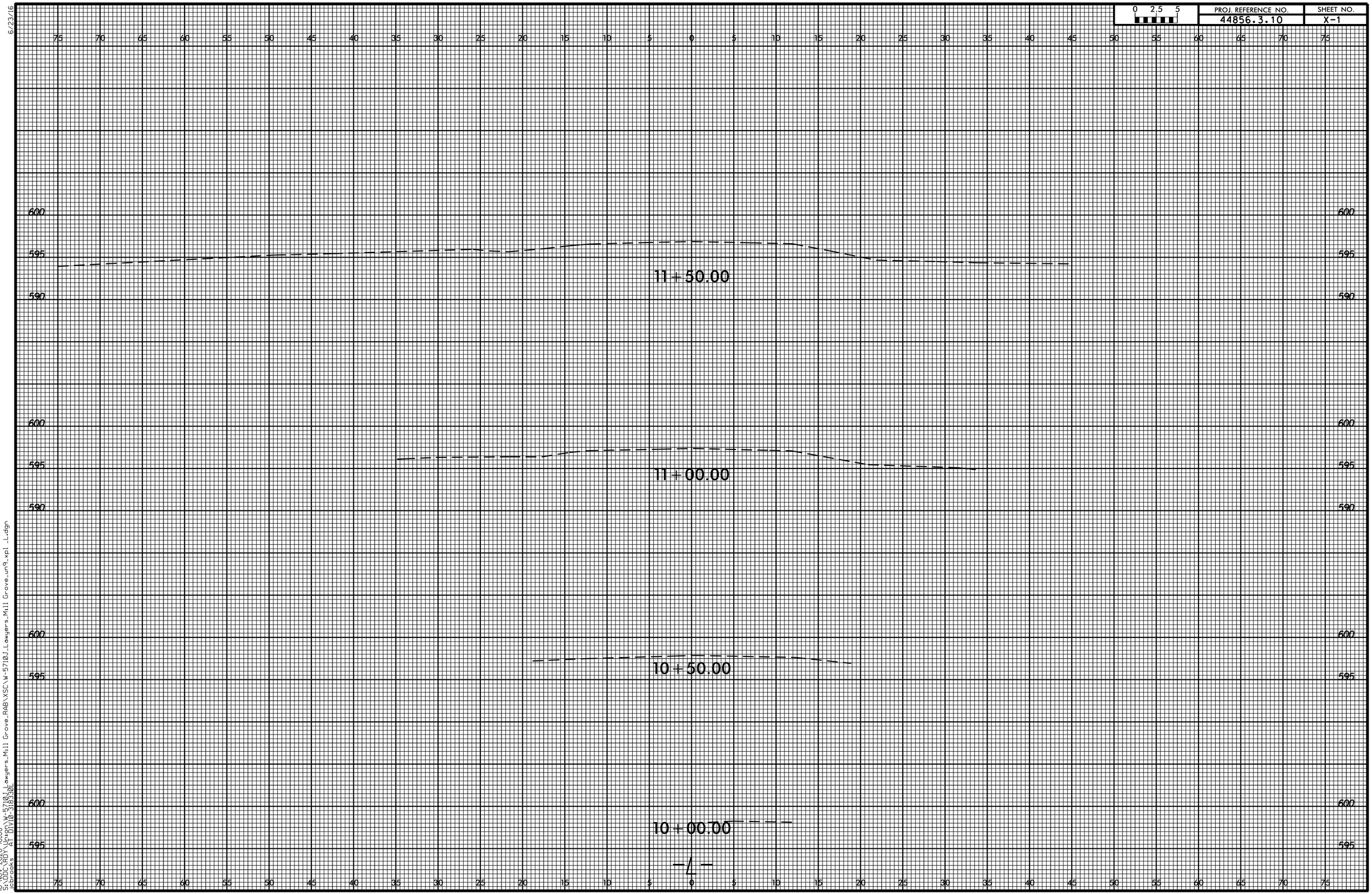

10-NOV-2020 10:08
S:\DDCVRDY\Union\W-5710J_Lawyers_Mill Grove_RAB\XSC\W-5710J_Lawyers_Mill Grove_un9_xpl_L.dgn
ebrooks AT DIV10-318330L

6/23/16

0 2.5 5	PROJ. REFERENCE NO.	SHEET NO.
	44856.3.10	X-2

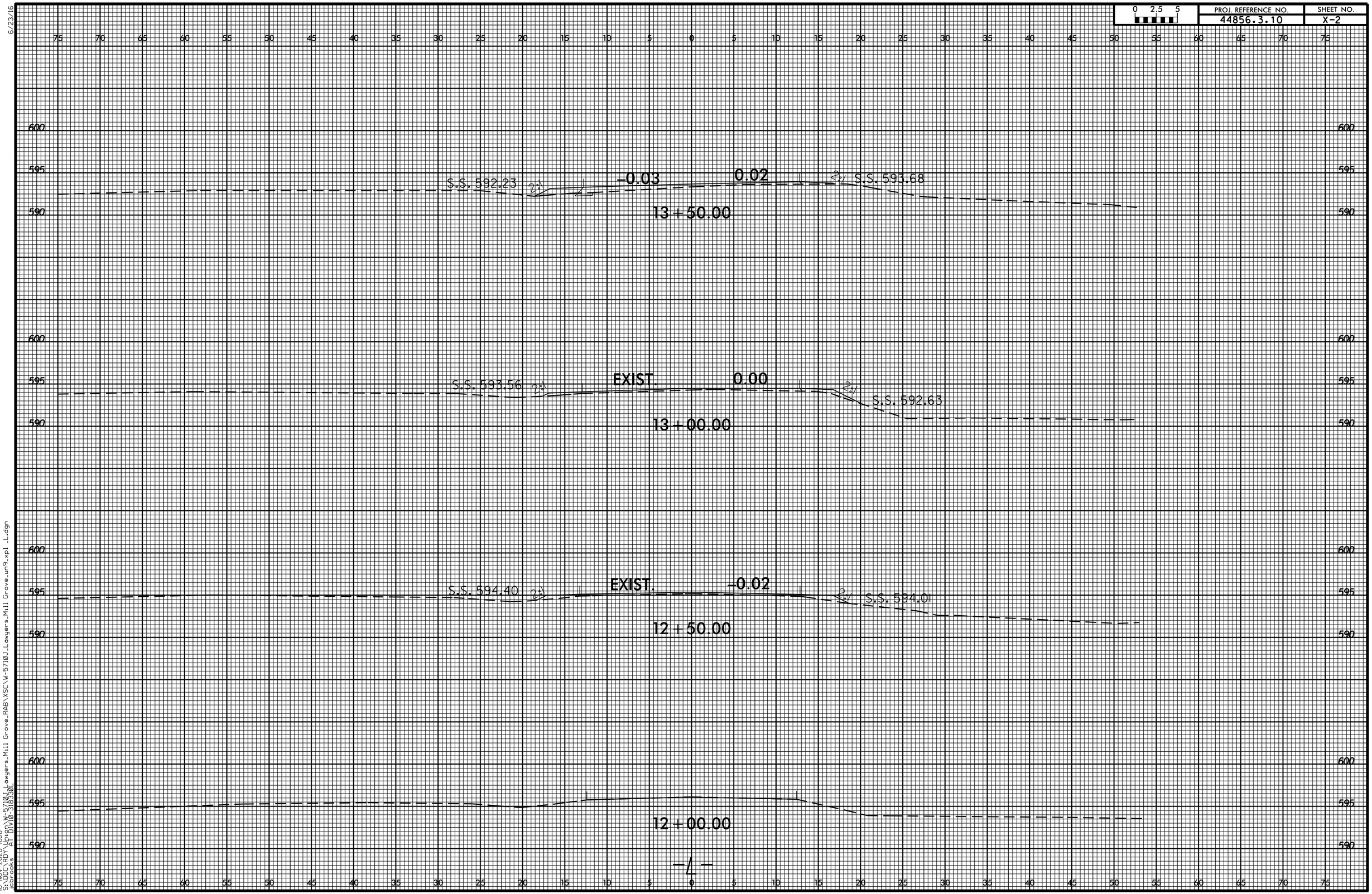

10-NOV-2020 10:10
S:\DDCYRDY\Union\W-5710J_Lawyers_Mill Grove_RAB\XSC\W-5710J_Lawyers_Mill Grove_un9_xpl_L.dgn
ebrooks AT DIV10-318330L

6/23/16

0 2.5 5	PROJ. REFERENCE NO.	SHEET NO.
	44856.3.10	X-3

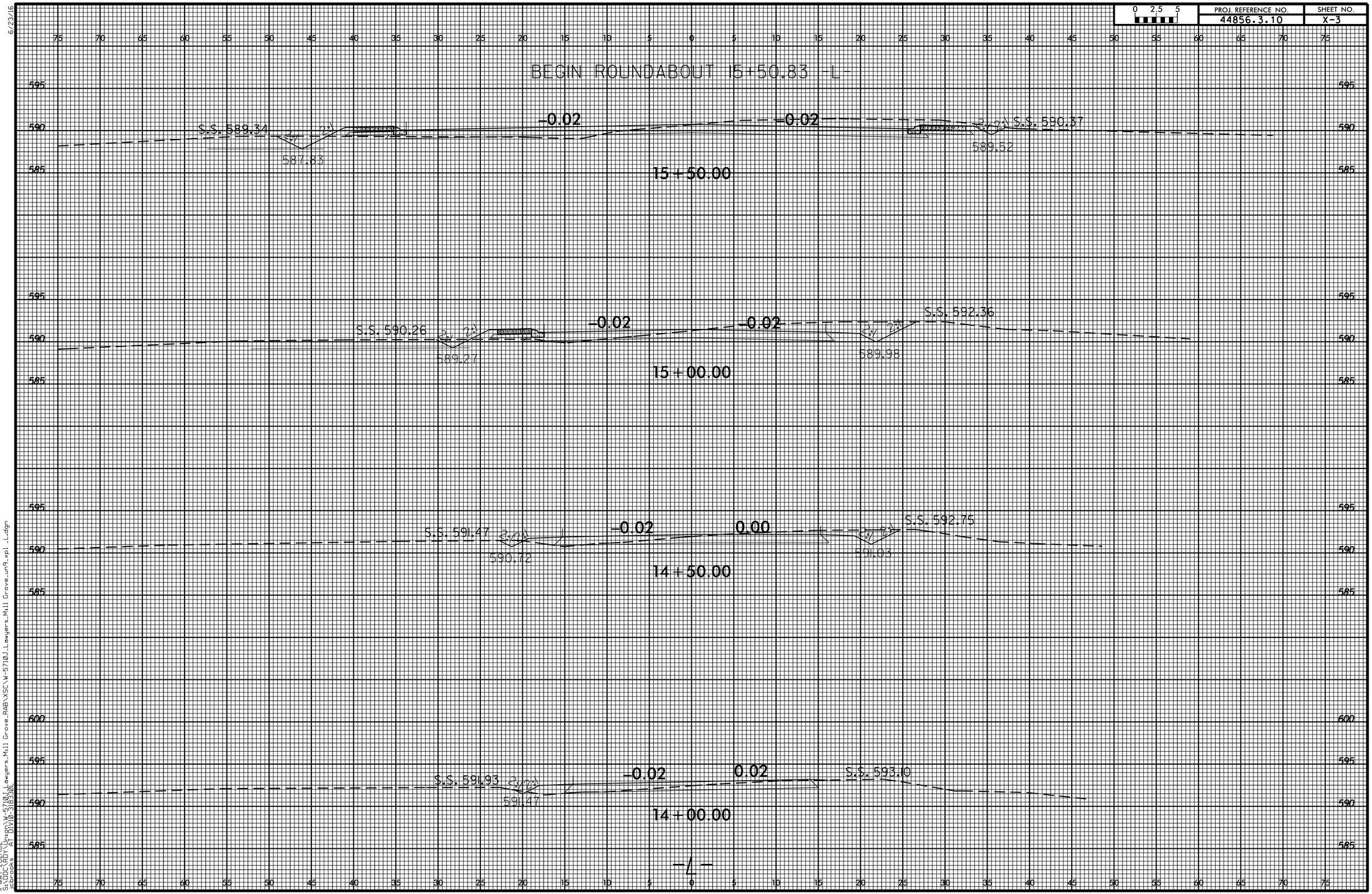

11-MAY-2021 11:12
S:\DOCVRDY\Union\W-5710J_Lawyers_Mill Grove_RAB\XSC\W-5710J_Lawyers_Mill Grove_un9_xpl_L.dgn
AT DIV10-318330L
ebrooks

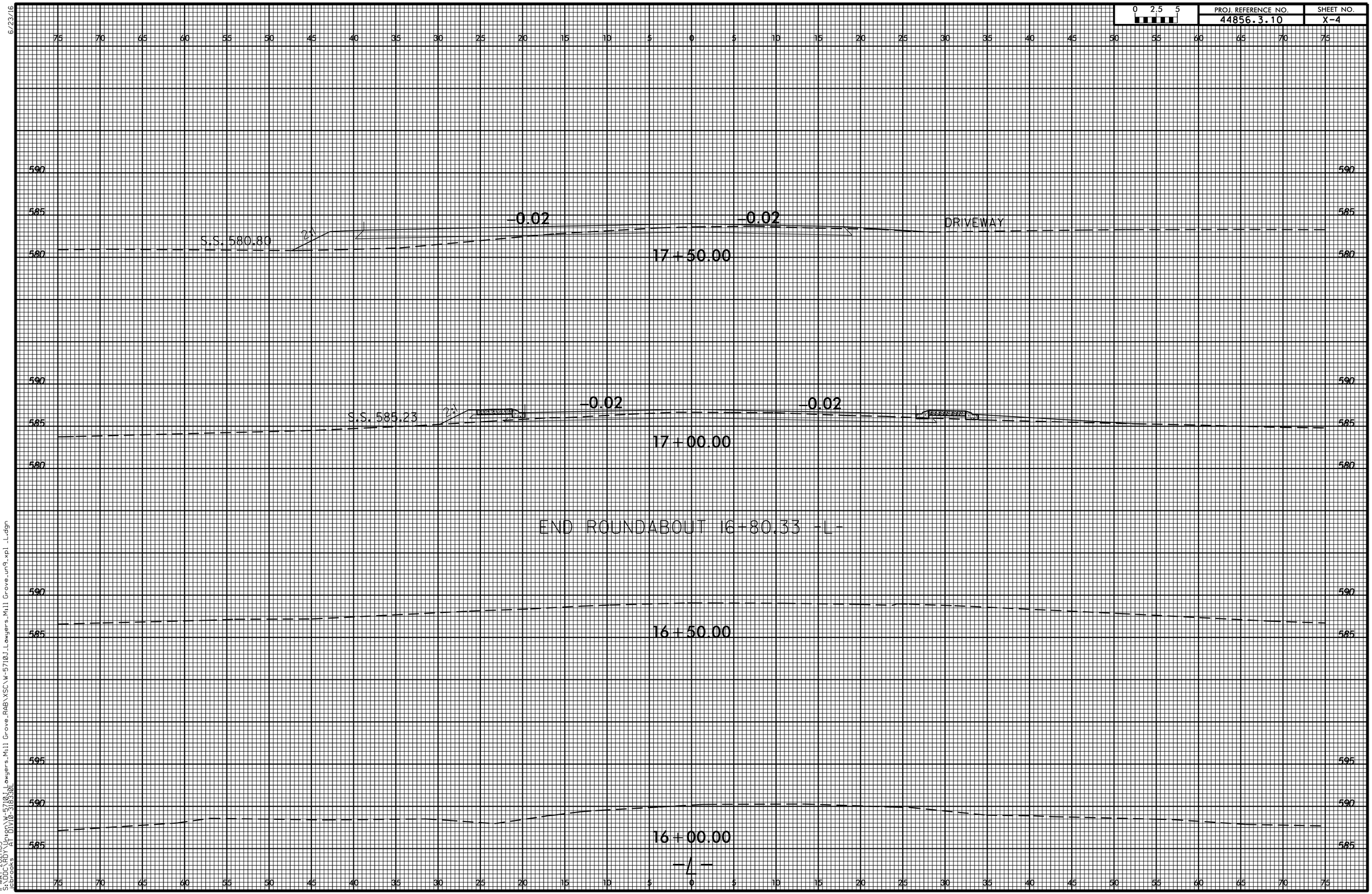

6/23/16

11-MAY-2021 11:15
S:\DOCS\RDY\Union\W-5710J_Lawyers_Mill Grove_RAB\XSC\W-5710J_Lawyers_Mill Grove_un9_xpl -L.dgn
ebrooks AT DIV10-318330L

6/23/16

0 2.5 5	PROJ. REFERENCE NO.	SHEET NO.
	44856.3.10	X-5

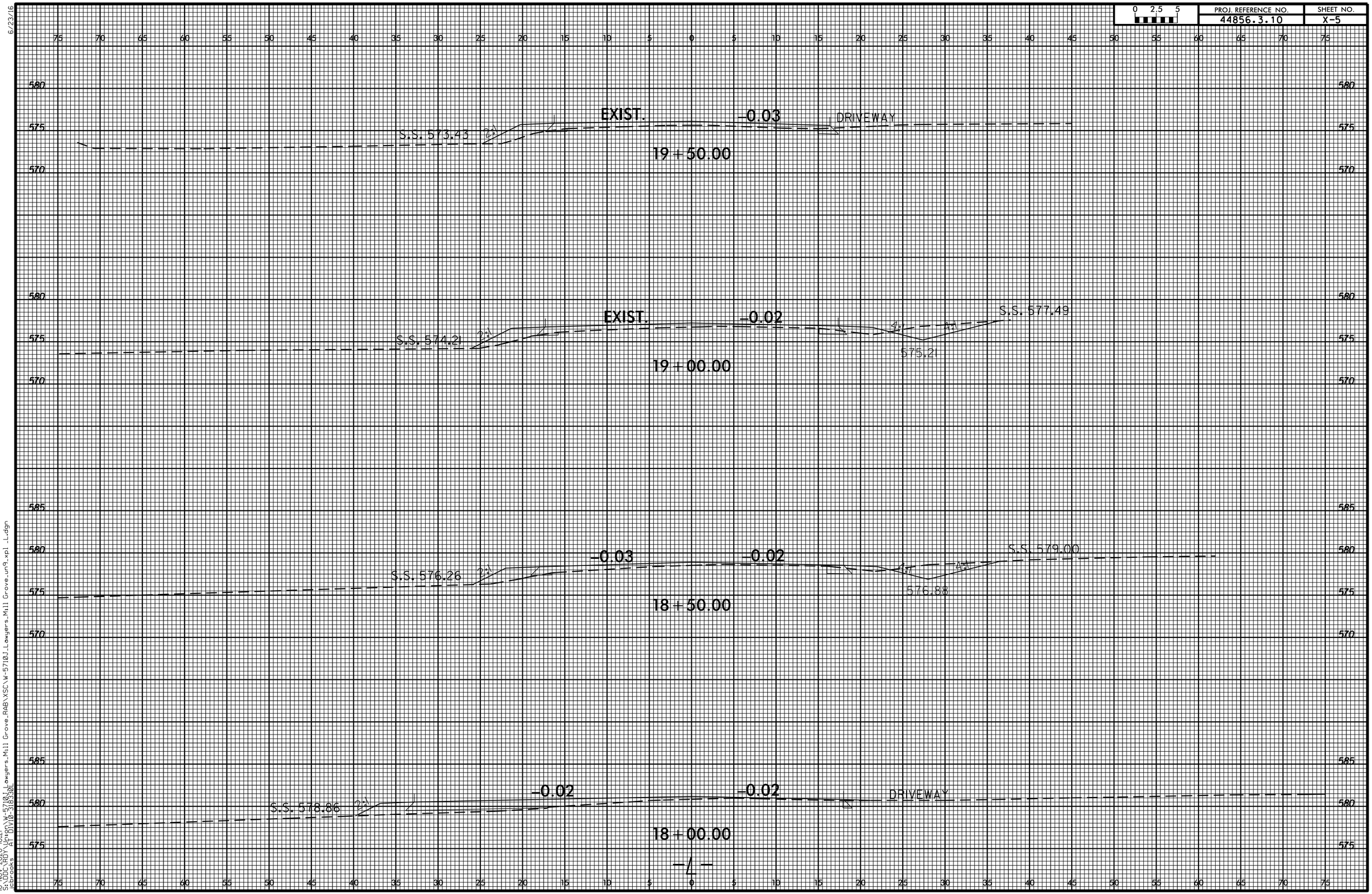

10-NOV-2020 10:21
S:\DDCVRDY\Union\W-5710J_Lawyers_Mill Grove_RAB\XSC\W-5710J_Lawyers_Mill Grove_un9_xpl_L.dgn
ebrooks AT DIV10-318330L

6/23/16

0 2.5 5	PROJ. REFERENCE NO.	SHEET NO.
	44856.3.10	X-6

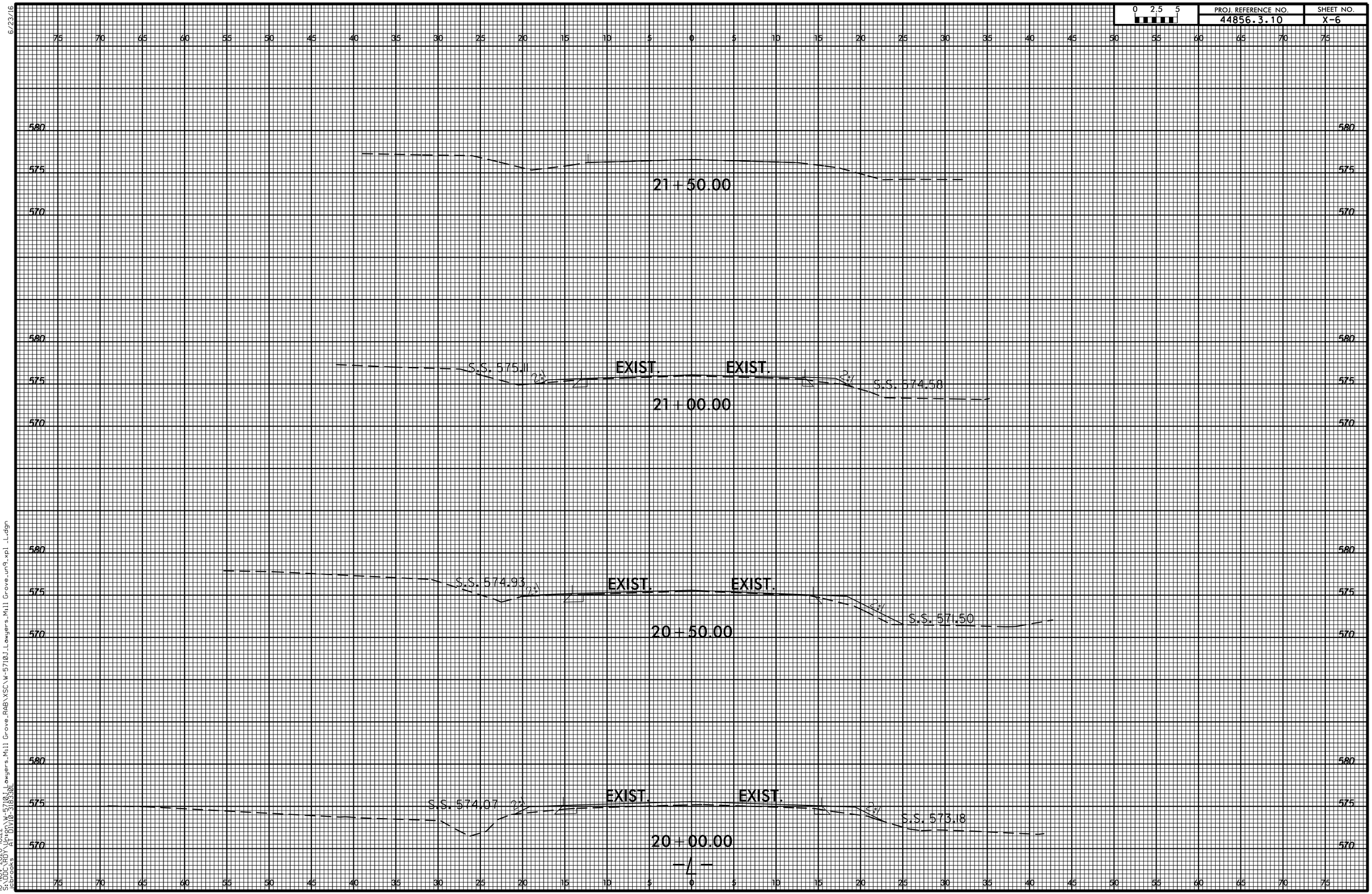

10-NOV-2020 10:22
S:\DDCVRDY\Union\W-5710J_Lawyers_Mill Grove_RAB\XSC\W-5710J_Lawyers_Mill Grove_un9_xpl -L.dgn
ebrooks AT DIV10-318330L

6/23/16

0 2.5 5	PROJ. REFERENCE NO.	SHEET NO.
	44856.3.10	X-7

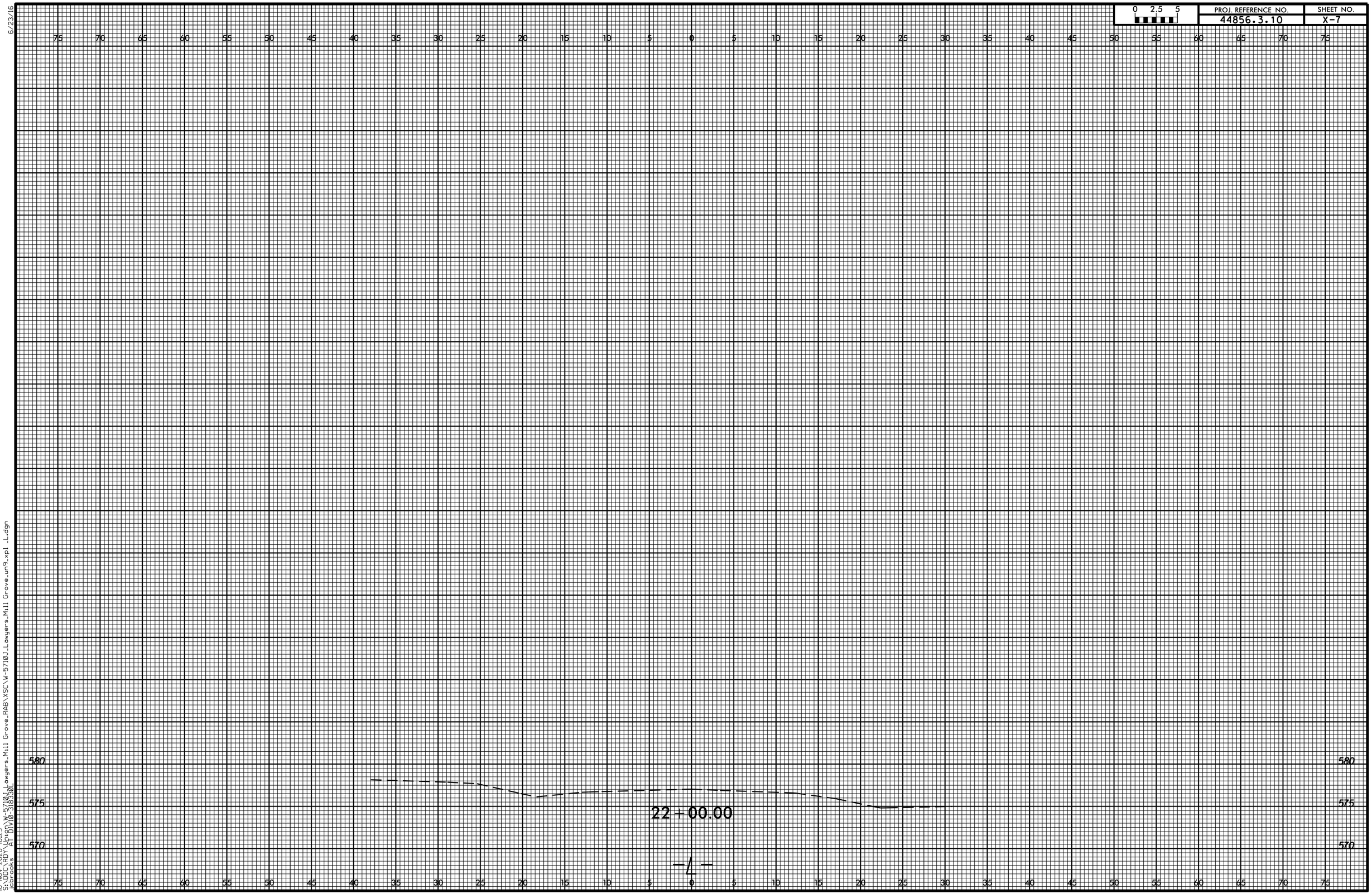

10-NOV-2020 10:25
S:\DDCVRDY\Union\W-5710J_Lawyers_Mill Grove_RAB\XSC\W-5710J_Lawyers_Mill Grove_un9_xpl_L.dgn
ebrooks AT DIV10-318330L

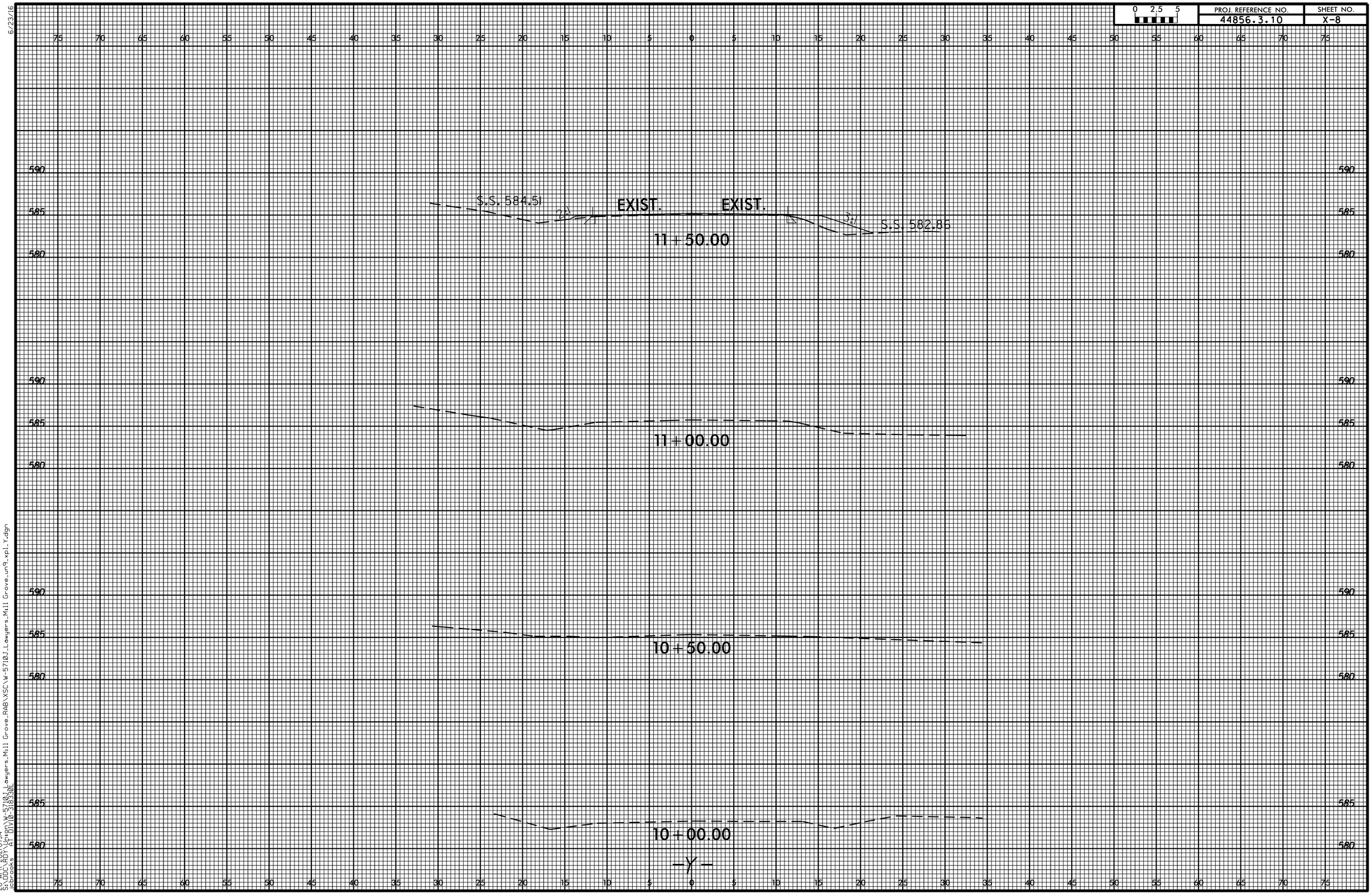

6/23/16

20-APR-2021 07:14
S:\DOCVRDY\Union\W-5710J_Lawyers_Mill Grove_RAB\XSC\W-5710J_Lawyers_Mill Grove_un9_xpl_Y.dgn
cebrooks AT DIVIO-318330L

0 2.5 5	PROJ. REFERENCE NO.	SHEET NO.
	44856.3.41	X-9

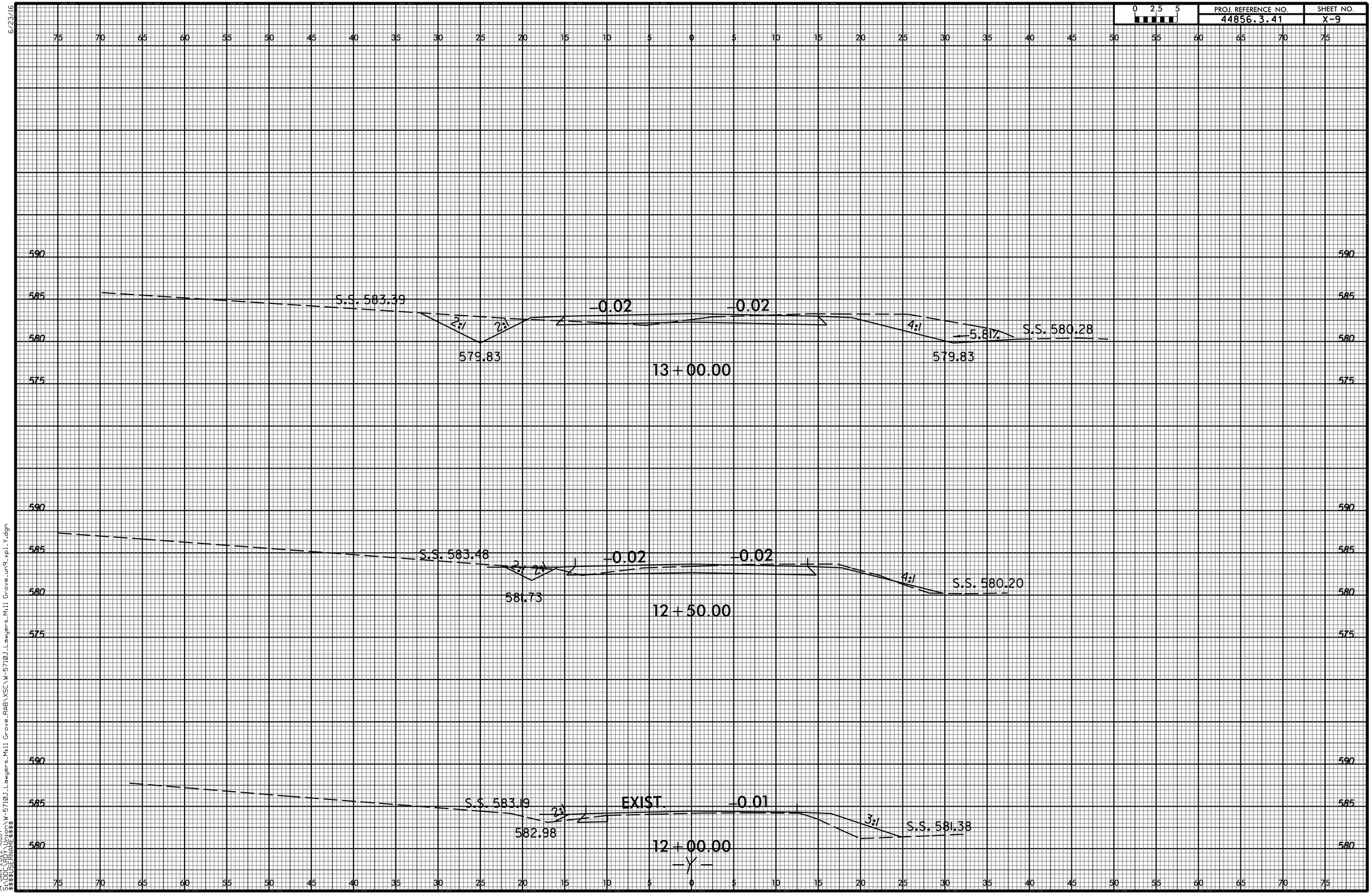

6/23/16

0 2.5 5	PROJ. REFERENCE NO.	SHEET NO.
	44856.3.10	X-10

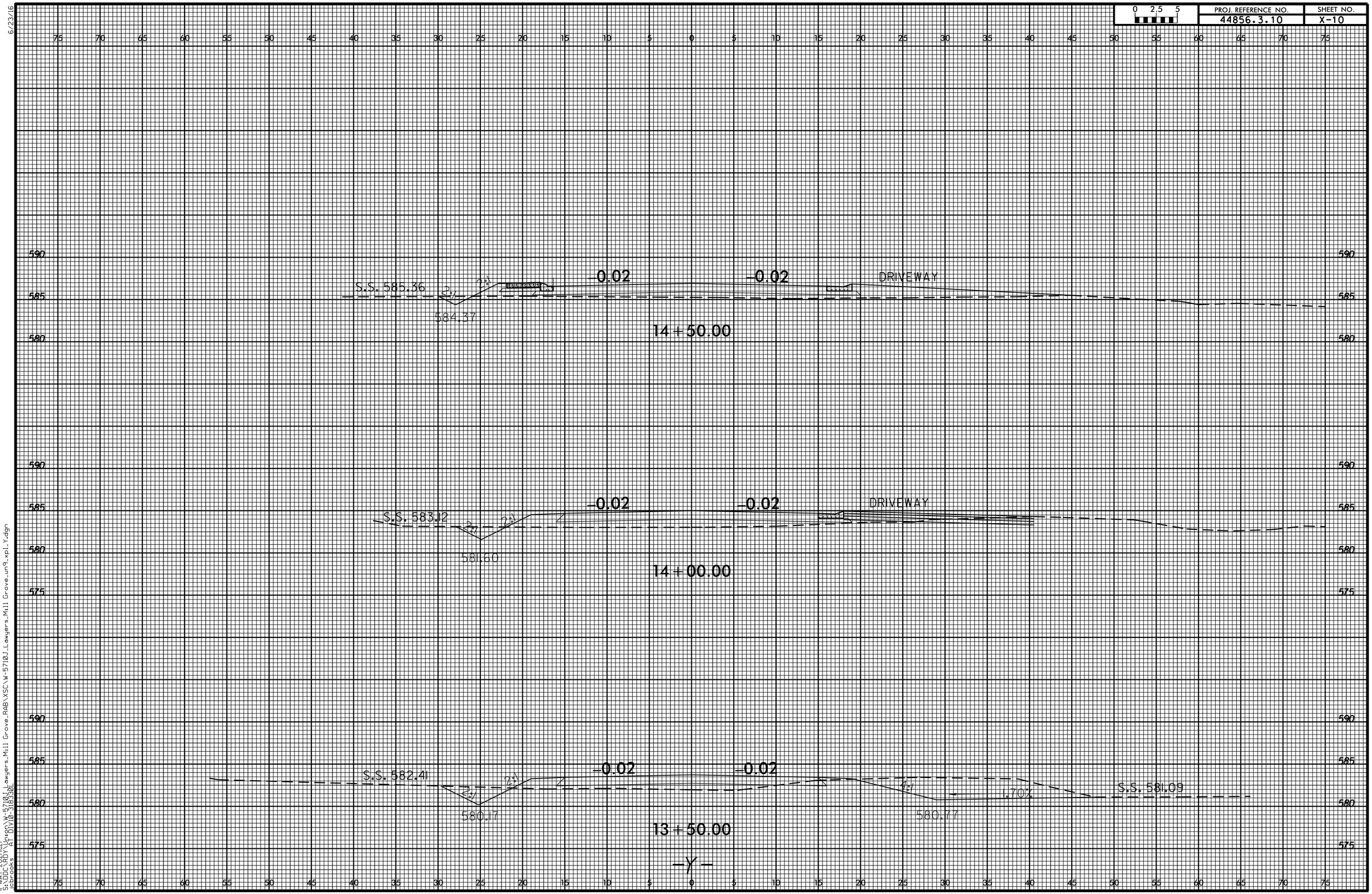

11-MAY-2021 11:21
S:\DOC\RDY\Union\W-5710J_Lawyers_Mill Grove_RAB\XSC\W-5710J_Lawyers_Mill Grove_un9_xpl_Y.dgn
ebrooks AT DIV10-318330L

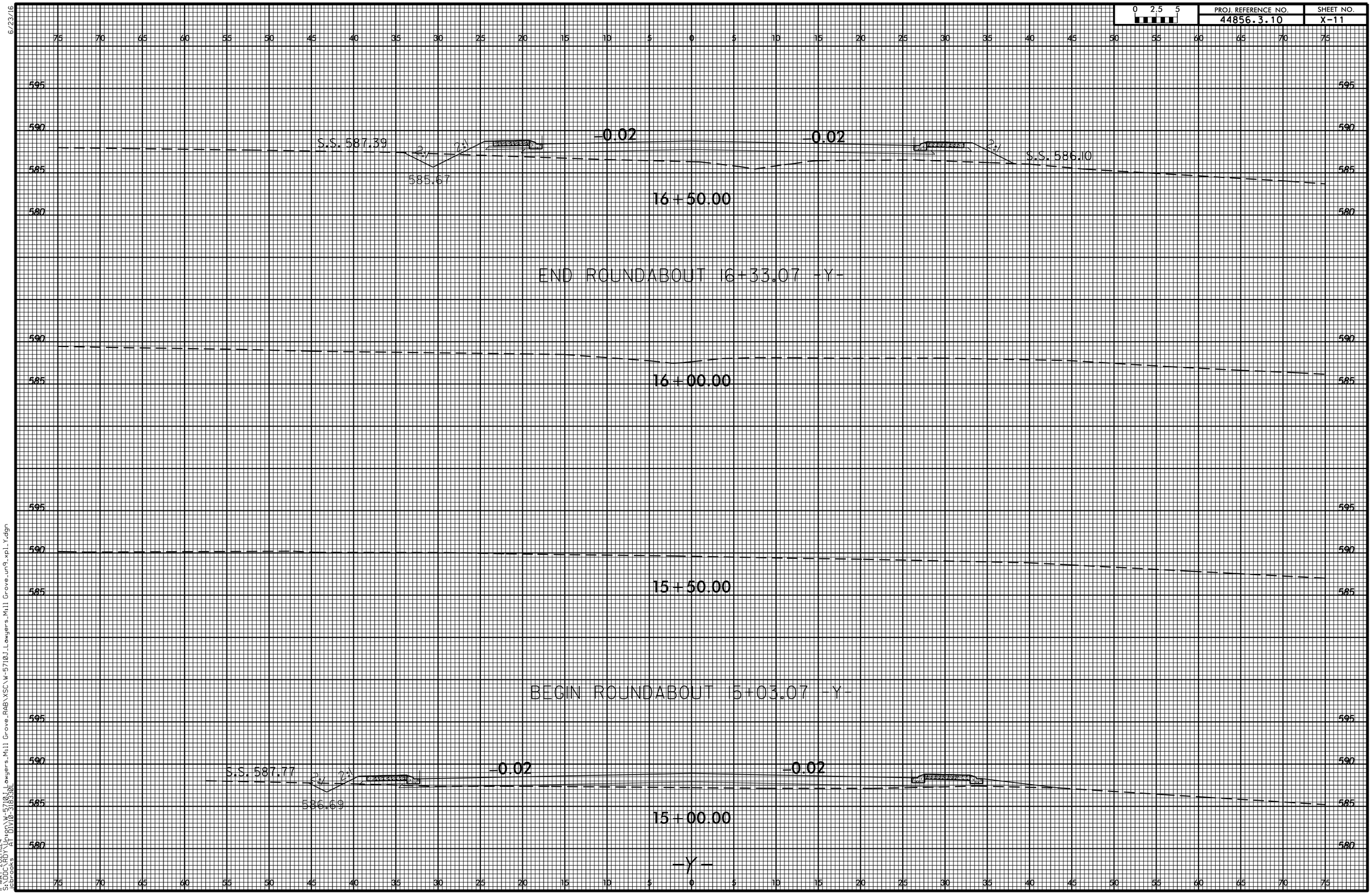

6/23/16

11-MAY-2021 11:24
S:\DOC\RDY\Union\W-5710J_Lawyers_Mill Grove_RAB\XSC\W-5710J_Lawyers_Mill Grove_un9_xpl_Y.dgn
cebrooks AT DIV10-318330L

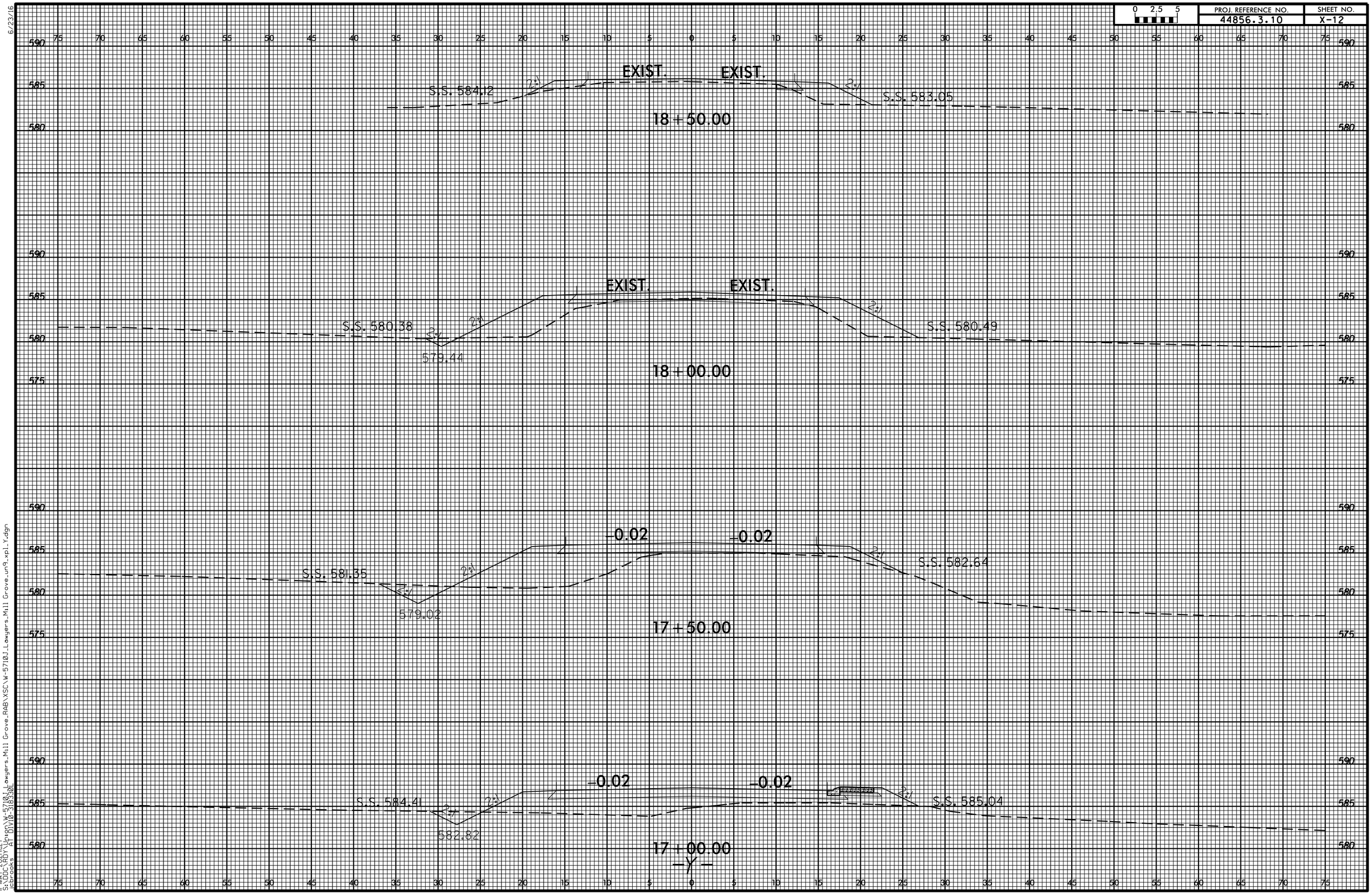

6/23/16
11-MAY-2021 11:27
S:\DOC\RDY\Union\W-5710J_Lawgers_Mill Grove_RAB\XSC\W-5710J_Lawgers_Mill Grove_un9_xpl_Y.dgn
ebrooks
AT DIV10-318330L

0 2.5 5	PROJ. REFERENCE NO.	SHEET NO.
	44856.3.10	X-13

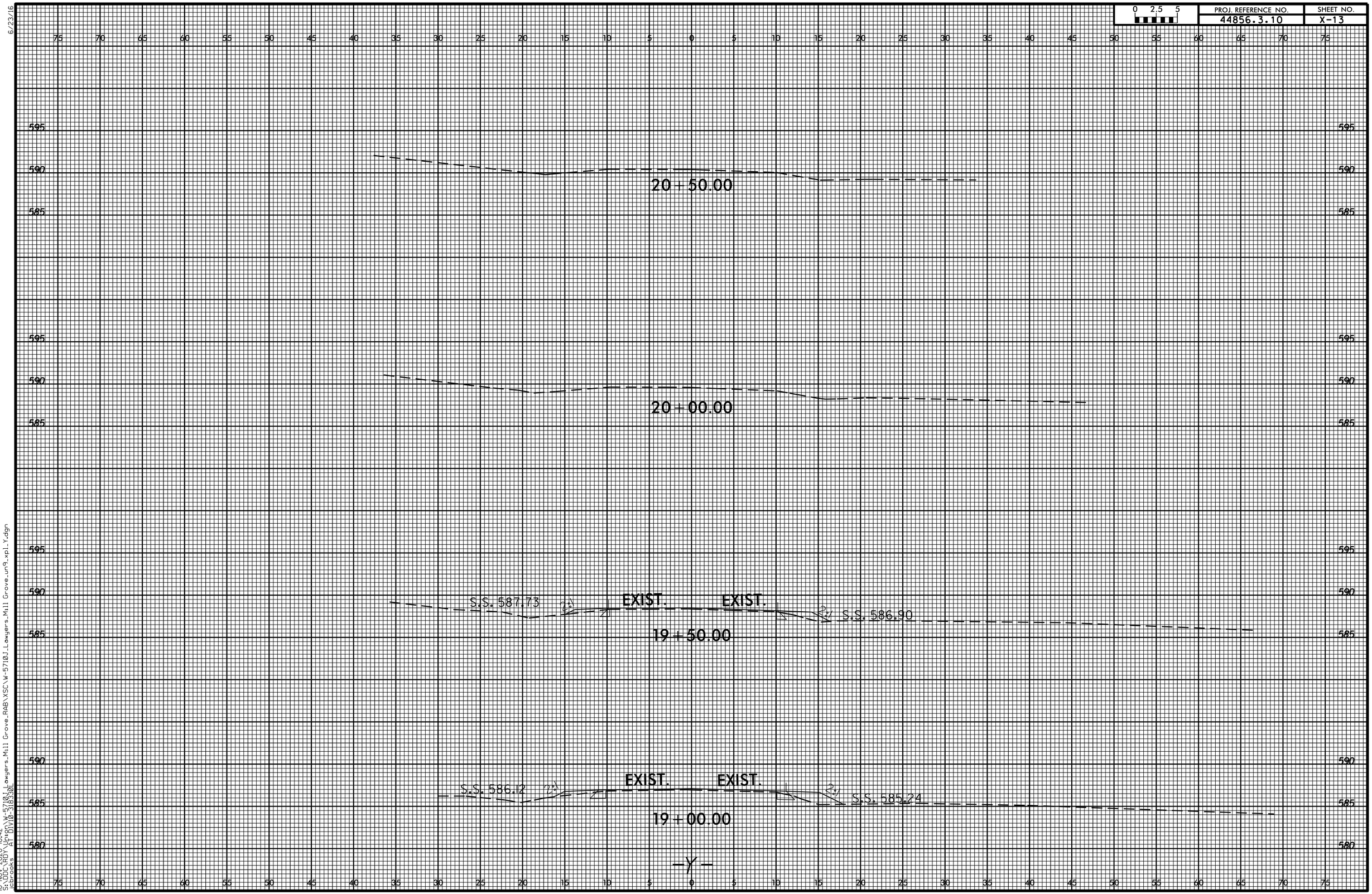

6/23/16

10-NOV-2020 10:42
S:\DDCYRDY\Union\W-5710J_Lawyers_Mill Grove_RAB\XSC\W-5710J_Lawyers_Mill Grove_un9_xpl_Y.dgn
ebrooks AT DIVIO-318330L