PROJECT REFERENCE NO.	SHEET NO.
P-4405EA	2B-2

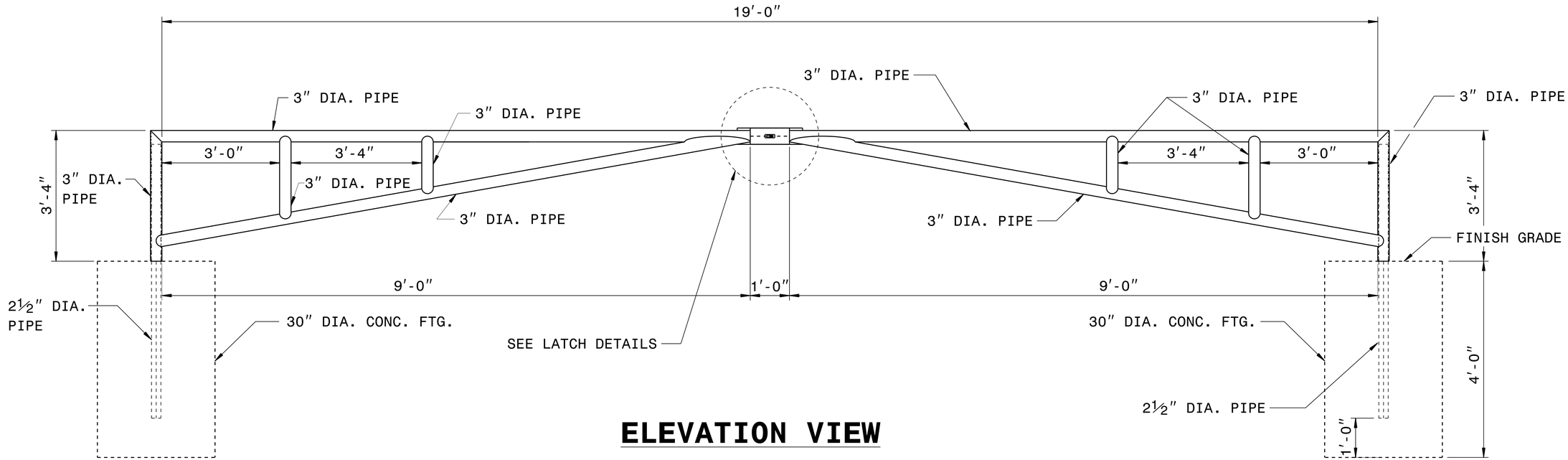

ELEVATION VIEW

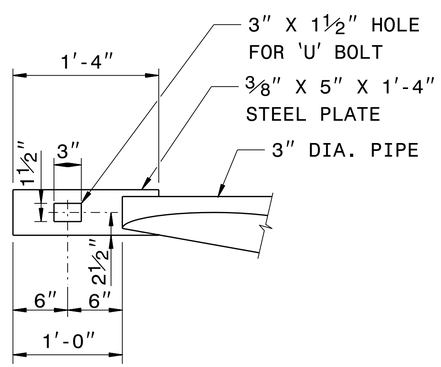

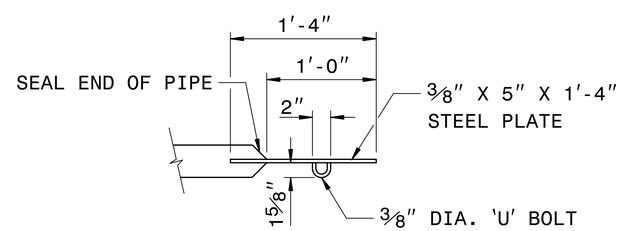

LATCH DETAILS

GENERAL NOTES:
1- ALL STEEL SHALL BE ASTM A36 STEEL.
2-¼" FILLET WELDS ON ALL CONNECTIONS.
3-CONCRETE SHALL BE MINIMUM CLASS 'B'.
4-GATE SHALL BE LOCATED AS DIRECTED BY THE ENGINEER.
5-ALL PIPE SIZES ARE O.D.
6-LUBRICATE 2½" DIA. PIPE BEFORE INSTALLING GATE TO INSURE SMOOTH OPERATION.
7- GATE SHALL BE PAID FOR PER EACH INSTALLATION.

NORTH CAROLINA PROFESSIONAL SEAL 10743 ENGINEER DANIEL L. HAVENER

DocuSigned by: Daniel L. Havener 45955E57F67D4B8... 5/6/2015

CONTRACT STANDARDS & DEVELOPMENT UNIT
STANDARDS AND SPECIAL DESIGN
Office 919-707-6950 FAX 919-250-4119

DETAIL OF STEEL PIPE GATE

ORIGINAL BY: DATE:
MODIFIED BY: rnbritt DATE: 10-29-2014
CHECKED BY: DATE:
FILE SPEC.: details/nbritt/misc/steelpipegate.dgn

28-APR-2015 09:40
S:\Engineering Services\CROSSING CLOSURE\Projects\Private\715 329N (Gladys H.Doster)\CADD Files\P-4405EA Sheet 2B-2 Steel Pipe Gate.dgn
_begackstetter AT RAILY266816L