DocuSign Envelope ID: 0BA34CC2-D3DC-4C61-A164-C0DB686A2F76

PROJECT REFERENCE NO.	SHEET NO.
C-5600G	ITS-44

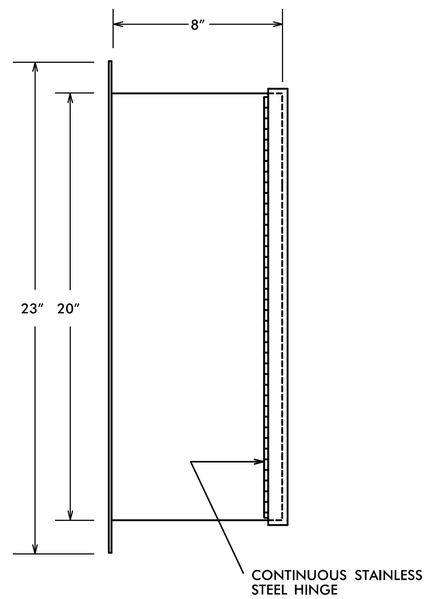

LEFT SIDE VIEW

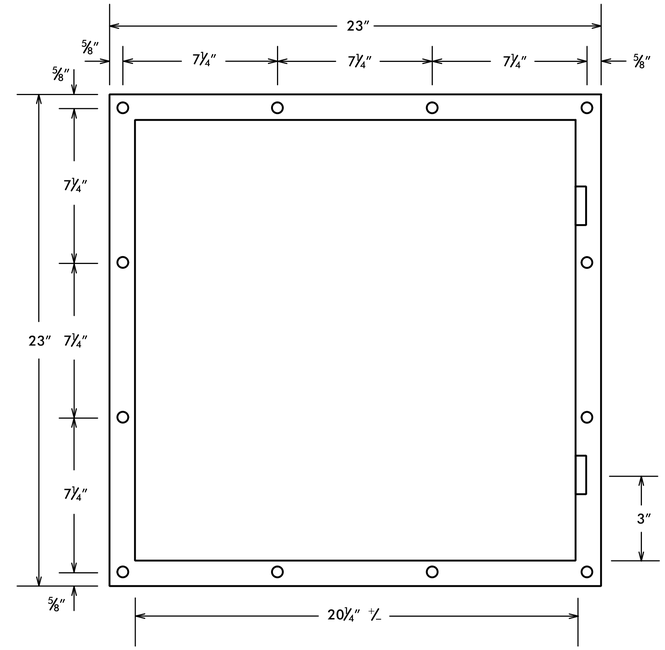

FRONT VIEW

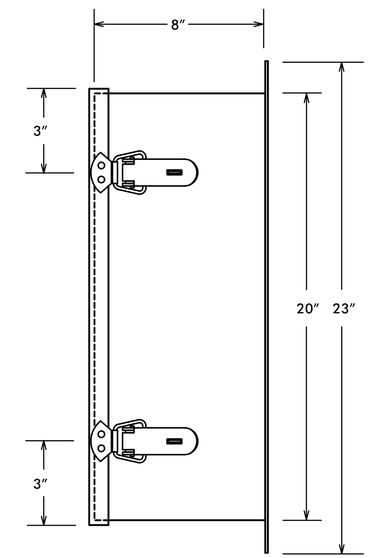

RIGHT SIDE VIEW

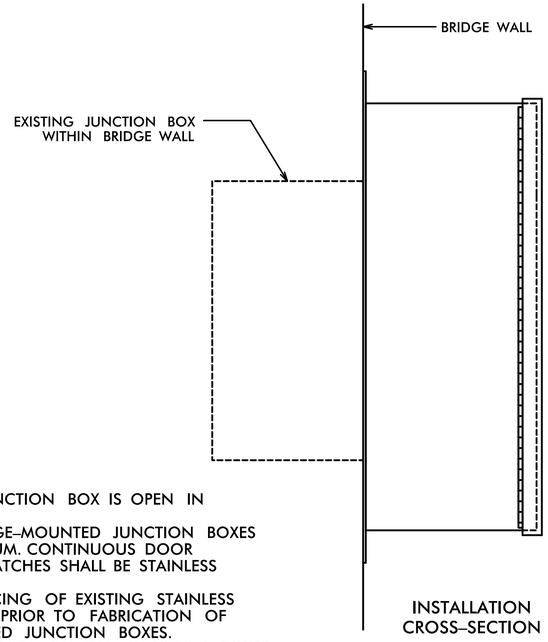

INSTALLATION CROSS–SECTION

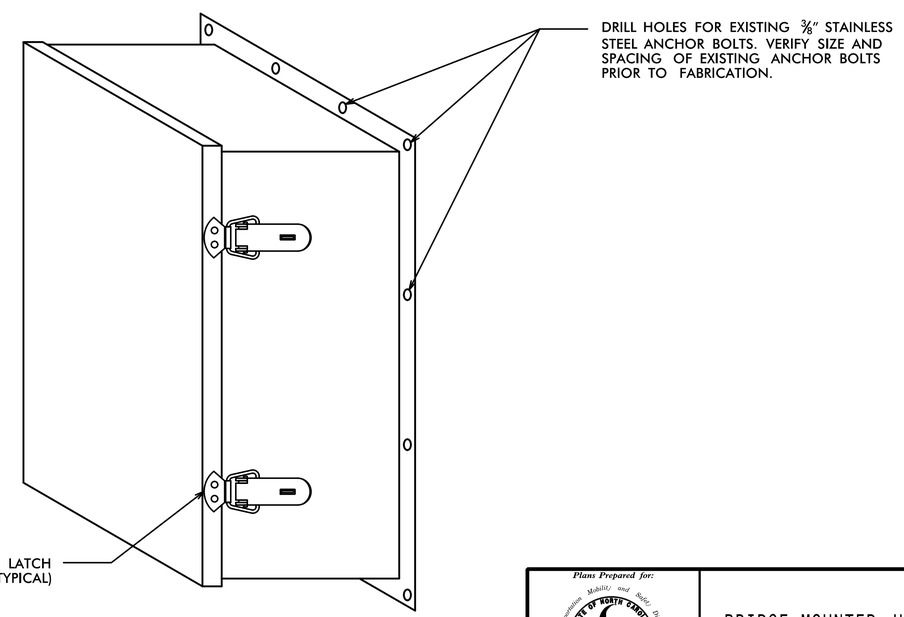

NOTES:
1. BRIDGE–MOUNTED JUNCTION BOX IS OPEN IN THE BACK.
2. FABRICATE NEW BRIDGE–MOUNTED JUNCTION BOXES FROM 0.125″ ALUMINUM. CONTINUOUS DOOR HINGE AND DRAW LATCHES SHALL BE STAINLESS STEEL.
3. VERIFY SIZE AND SPACING OF EXISTING STAINLESS STEEL ANCHOR BOLTS PRIOR TO FABRICATION OF NEW BRIDGE–MOUNTED JUNCTION BOXES.
4. REMOVE EXISTING BRIDGE–MOUNTED JUNCTION BOXES AND SEALANT.
5. ATTACH NEW BRIDGE–MOUNTED JUNCTION BOXES TO EXISTING ANCHOR BOLTS USING NEW STAINLESS STEEL HEX NUTS AND WASHERS.
6. SEAL NEW JUNCTION BOXES TO BRIDGE WITH SILICONE CAULK.
7. SEAL DOOR WITH NEOPRENE GASKET STRIP.

HNTB NORTH CAROLINA, P.C.
343 E. Six Forks Road, Suite 200
Raleigh, North Carolina 27609
NC License No: C-1554

DOCUMENT NOT CONSIDERED FINAL UNLESS ALL SIGNATURES COMPLETED

Plans Prepared for: Transportation Mobility and Safety Division — Intermodal Transportation Systems — STATE OF NORTH CAROLINA DEPARTMENT OF TRANSPORTATION
750 N. Greenfield Pkwy., Garner, NC 27529

BRIDGE-MOUNTED JUNCTION BOX

GASTON & MECKLENBURG COUNTIES
DIVISION 12 & 10 BELMONT

PLAN DATE:	JUNE 2016	REVIEWED BY:	A.D. KLINKSIEK
PREPARED BY:	T.R. TERRELL	REVIEWED BY:	H.L. WINSTEAD

SCALE: NONE

REVISIONS	INIT.	DATE

SEAL: NORTH CAROLINA PROFESSIONAL SEAL 07983 ENGINEER HARVEY L. WINSTEAD, JR.

DocuSigned by: H.L. Winstead, Jr. 6/29/2016
ESIGNATURE DATE

CADD Filename: C-5600G_ITS-44.dgn