DocuSign Envelope ID: 0BA34CC2-D3DC-4C61-A164-C0DB686A2F76

PROJECT REFERENCE NO.	SHEET NO.
C-5600G	ITS-3

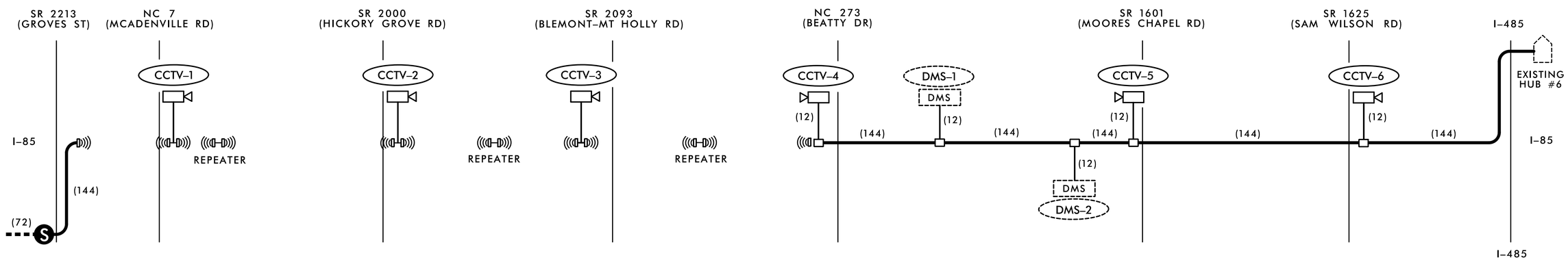

LEGEND

XXXX	PROPOSED DEVICE AND ID NUMBER		PROPOSED SPLICE ENCLOSURE
XXXX	EXISTING DEVICE AND ID NUMBER	S	EXISTING SPLICE ENCLOSURE
(XX)	XX-SINGLE MODE FIBERS		PROPOSED CCTV
	EXISTING 72 FIBER OPTIC CABLE	DMS	EXISTING DMS
	PROPOSED 144 FIBER OPTIC CABLE		PROPOSED WIRELESS ETHERNET UNIT
	PROPOSED 12 FIBER OPTIC CABLE		EXISTING HUB BUILDING

DOCUMENT NOT CONSIDERED FINAL UNLESS ALL SIGNATURES COMPLETED

HNTB
HNTB NORTH CAROLINA, P.C.
343 E. Six Forks Road, Suite 200
Raleigh, North Carolina 27609
NC License No: C-1554

Plans Prepared for:
Transportation Mobility and Safety Division
Intelligent Transportation Systems Section
750 N. Greenfield Pkwy., Garner, NC 27529

SCHEMATIC DIAGRAM

PLAN DATE:	JUNE 2016	REVIEWED BY:	A.D. KLINKSIEK
PREPARED BY:	T.R. TERRELL	REVIEWED BY:	H.L. WINSTEAD

SCALE: NONE

REVISIONS	INIT.	DATE

SEAL
NORTH CAROLINA PROFESSIONAL ENGINEER SEAL 07983 HARVEY L. WINSTEAD, JR.

DocuSigned by:
H.L. Winstead, Jr. 6/29/2016
E531828B147347A...
SIGNATURE DATE

CADD Filename: C-5600G_ITS-03.dgn