DocuSign Envelope ID: 0BA34CC2-D3DC-4C61-A164-C0DB686A2F76

PROJECT REFERENCE NO.	SHEET NO.
C-5600G	ITS-45

STANDARD (ELECTRICAL) JUNCTION BOX

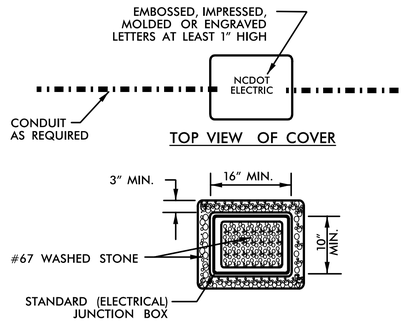

OVERSIZED HEAVY DUTY JUNCTION BOX

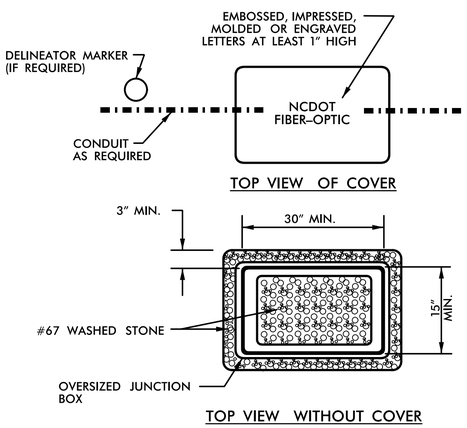

SPECIAL OVERSIZED HEAVY DUTY JUNCTION BOX

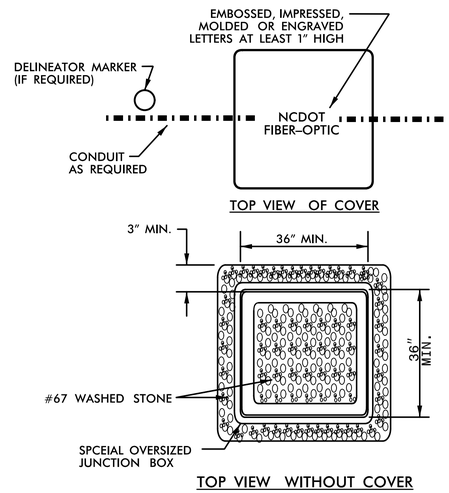

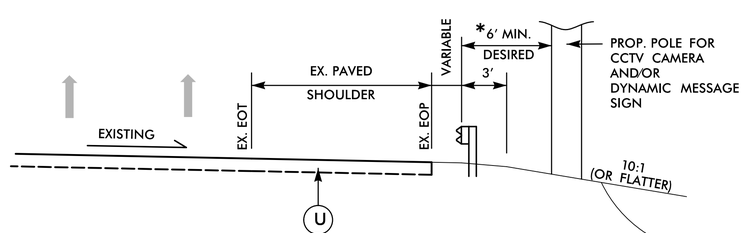

* 12' MIN DESIRED ALONG INTERSTATE & RAMPS

6' MIN DESIRED ON Y-LINES

3' 6" (ABSOLUTE MINIMUM) USING GUARDRAIL POSTS AT 3' 1 1/2" SPACING

REFER TO ROADWAY STANDARD DRAWING 862.01 (SHEETS 1 & 2 OF 12)

TYPICAL SECTION 1

I-85 CCTV-2 LEFT NEAR SR 2000 (SEE SHEET ITS-10)

I-85 CCTV-5 LEFT NEAR MOORES CHAPEL ROAD (SEE SHEET ITS-20)

ROADWAY

NORTH CAROLINA PROFESSIONAL SEAL 023521 ENGINEER RHONDA B. EARLY

DocuSign by: Rhonda B. Early 6/29/2016
F34CAF9AC8B148A... SIGNATURE DATE

CABINET HOUSING DIMENSIONS

336S

A	24"
B	20"
C	46"

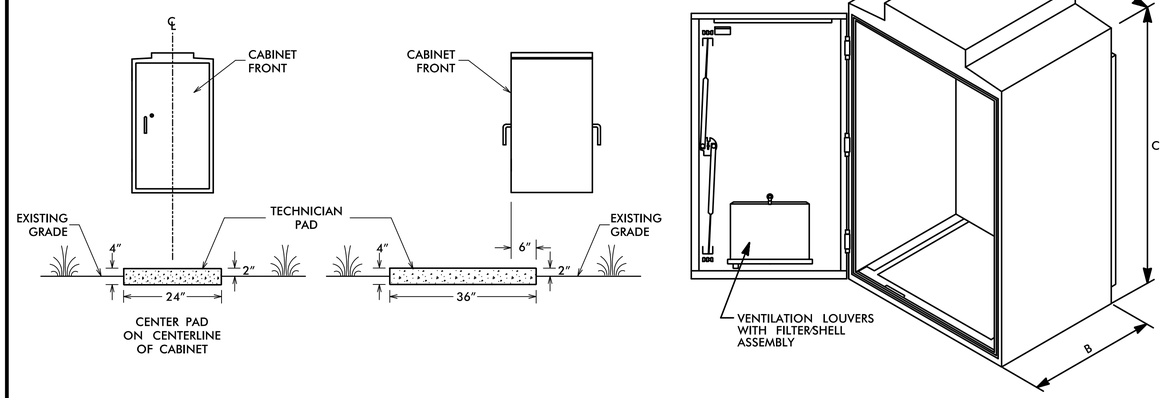

EQUIPMENT CABINET AND TECHNICIAN PAD

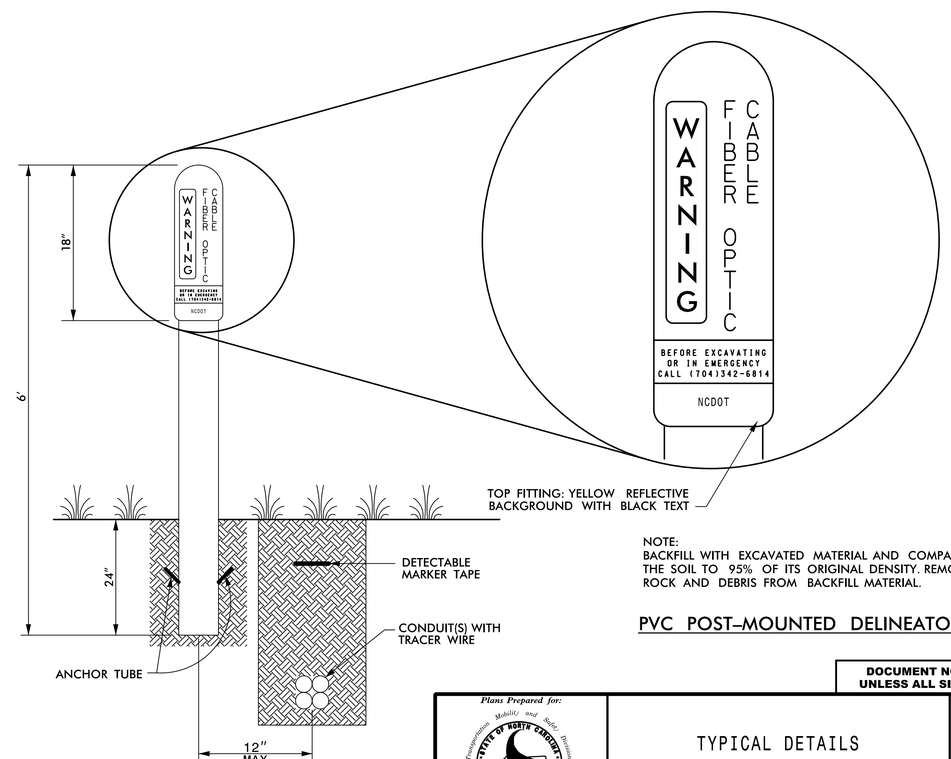

NOTE:
BACKFILL WITH EXCAVATED MATERIAL AND COMPACT THE SOIL TO 95% OF ITS ORIGINAL DENSITY. REMOVE ROCK AND DEBRIS FROM BACKFILL MATERIAL.

PVC POST-MOUNTED DELINEATOR MARKER

DOCUMENT NOT CONSIDERED FINAL UNLESS ALL SIGNATURES COMPLETED

HNTB
HNTB NORTH CAROLINA, P.C.
343 E. Six Forks Road, Suite 200
Raleigh, North Carolina 27609
NC License No: C-1554

Plans Prepared for: Transportation Mobility and Safety Division — Intermodal Transportation Systems — STATE OF NORTH CAROLINA DEPARTMENT OF TRANSPORTATION
750 N. Greenfield Pkwy., Garner, NC 27529

TYPICAL DETAILS

PLAN DATE:	JUNE 2016	REVIEWED BY:	A.D. KLINKSIEK
PREPARED BY:	T.R. TERRELL	REVIEWED BY:	H.L. WINSTEAD

SCALE	REVISIONS	INIT.	DATE
NONE			

SEAL

NORTH CAROLINA PROFESSIONAL SEAL 07983 ENGINEER HARVEY L. WINSTEAD, JR.

DocuSign by: H.L. Winstead, Jr. 6/29/2016
ES31209814724F4... SIGNATURE DATE

CADD Filename: C5600G_ITS-45.dgn