ASBUILT PLANS DJ00266
44376.3.2
Mecklenburg County
South Trade St (SR 3448 from Marque Place to Chaphyn Lane

AS CONSTRUCTED PLANS

SHEET NO. INDEX

_____ TITLE SHEET
_____ ORIGINAL TITLE SHEET
_____ INDEX OF SHEETS, GENERAL NOTES, AND LISTS OF STANDARDS
_____ TYPICAL SECTION
_____ SUMMARY OF DRAINAGE QUANTITIES
_____ PLAN SHEETS
_____ CROSS SECTIONS
_____ ELECTRICAL PLAN SHEETS
_____ LANDSCAPE PLAN SHEETS
_____
_____
_____ UTILITY PLAN SHEETS
_____ SIGNING PLAN SHEETS
_____ CULVERT PLAN SHEETS
_____ STRUCTURE PLAN SHEETS
_____ COMPUTATION SHEET FOR ITEMS NOT COMPUTED IN PAY RECORD BOOKS

PROJECT NO.: DJ00266 44376.3.2

F.A.NO.: N/A

T.I.P NO.: U-5804 B

COUNTY : MECKLENBURG

DESCRIPTION : SOUTH TRADE ST (SR-3448) FROM MARQUE PL TO CHAPHYN LN

DIVISION NO.: 10

CONTRACTOR : BLYTHE DEVELOPMENT CO
1415 E. WESTINGHOUSE BLVD
CHARLOTTE, NC 28273

DIVISION ENGINEER : BRETT CANIPE, P.E.

RESIDENT ENGINEER : BRIAN DAVIS, P.E.

I HEREBY CERTIFY THAT THIS PROJECT WAS CONSTRUCTED ACCORDING TO PLANS EXCEPT AS NOTED HEREIN.

RESIDENT ENGINEER

FINAL RIGHT OF WAY HAS BEEN CHECKED.

DIVISION RIGHT OF WAY AGENT

TIP PROJECT: U-5804B

PROJECT: 44376.3.2

See Sheet 1A For Index of Sheets
See Sheet 1B For Conventional Symbols

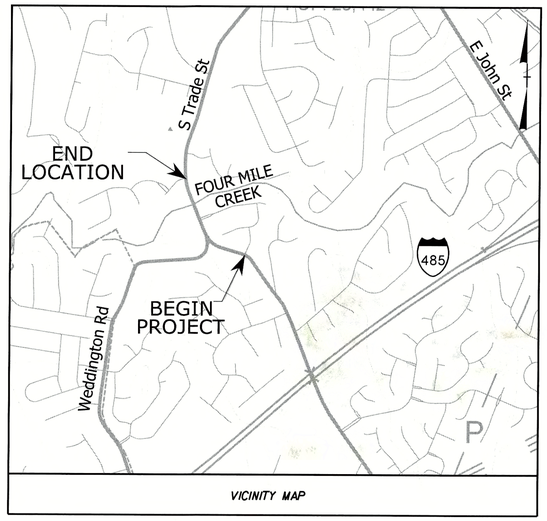

VICINITY MAP

STATE OF NORTH CAROLINA
DIVISION OF HIGHWAYS

MECKLENBURG COUNTY

STATE	STATE PROJECT REFERENCE NO.	SHEET NO.	TOTAL SHEETS
N.C.	44376.3.2	1	

STATE PROJ. NO.	F. A. PROJ. NO.	DESCRIPTION
44376.1.2	N/A	PE
44376.2.2	N/A	R/W
44376.3.2	N/A	CONSTRUCTION

DOCUMENT NOT CONSIDERED FINAL UNLESS ALL SIGNATURES COMPLETED

LOCATION: ***SOUTH TRADE STREET (SR 3448) FROM MARQUE PLACE TO CHAPHYN LANE***

TYPE OF WORK: ***GRADING, DRAINAGE, PAVING, UTILITIES, AND CULVERT EXTENSION***

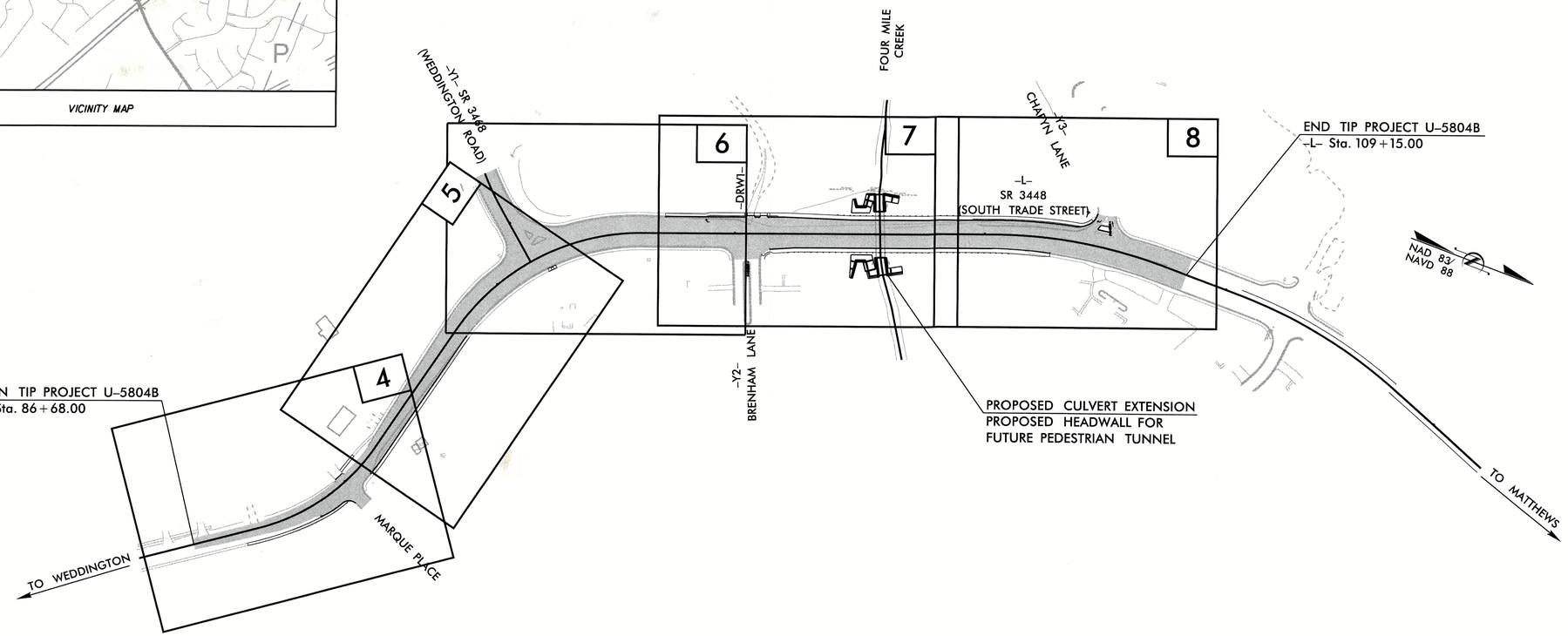

DOCUMENT NOT CONSIDERED FINAL UNLESS ALL SIGNATURES COMPLETED

GRAPHIC SCALES

PLANS: 20 10 0 20 40

PROFILE (HORIZONTAL): 20 10 0 20 40

PROFILE (VERTICAL): 2 1 0 2 4

DESIGN DATA

ADT 2018 = 21,000 VPD
ADT 2040 = 26,150 VPD

K = 4%
D = 56%
T = 2%*
V = 40 MPH

FUNCTIONAL CLASSIFICATION: MAJOR COLLECTOR

* 1% TTST 1% DUAL

SUB REGIONAL TIER

PROJECT LENGTH

LENGTH ROADWAY TIP PROJECT U-5804B = 0.426 MILES
TOTAL LENGTH TIP PROJECT = 0.426 MILES

PLANS PREPARED FOR THE NCDOT BY:

Kimley»Horn ©2016
NC LICENSE #F-0102
200 SOUTH TRYON STREET, SUITE 200
CHARLOTTE, NORTH CAROLINA 28202
PHONE: (704) 333-5131

2012 STANDARD SPECIFICATIONS

RIGHT OF WAY DATE:
JULY 25, 2017

LETTING DATE:
OCTOBER 18, 2017

BENJAMIN S. TAYLOR, P.E.
PROJECT ENGINEER

FRANK D. MASTERSON, P.E.
PROJECT DESIGN ENGINEER

TIM BOLAND, P.E.
NCDOT CONTACT

HYDRAULICS ENGINEER

NORTH CAROLINA PROFESSIONAL SEAL 037923 ENGINEER FRANK D MASTERSON III

DocuSigned by: Frank Masterson 10/26/2017
SIGNATURE: P.E.

ROADWAY DESIGN ENGINEER

NORTH CAROLINA PROFESSIONAL SEAL 037923 ENGINEER FRANK D MASTERSON III

DocuSigned by: Frank Masterson 10/26/2017
SIGNATURE: P.E.

STATE OF NORTH CAROLINA · DEPARTMENT OF TRANSPORTATION ·

11/09/2015

REVISIONS

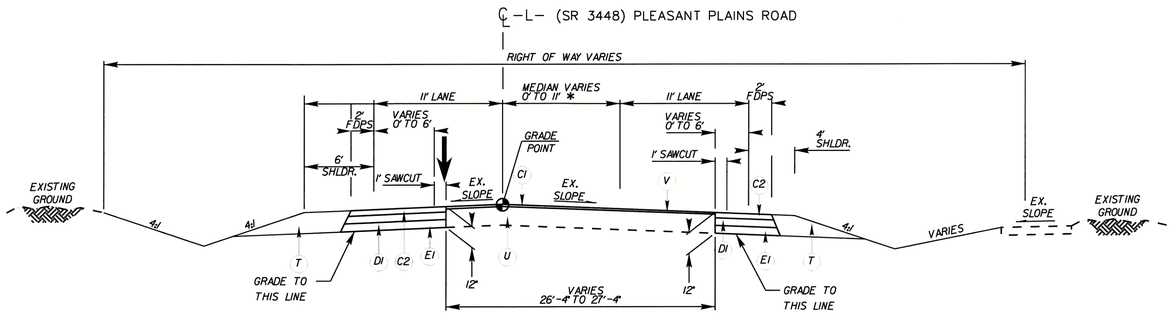

TYPICAL SECTION NO. 1

-L- STA. 86+68.00 TO -L- STA. 89+21.18

NOTE:

1) REMOVE & REPLACE 38' OF C&G FROM STA. 89+21.18 TO STA. 89+56.70

2) REMOVE & REPLACE 40' OF SIDEWALK FROM STA. 90+07.73 TO STA. 90+50.02

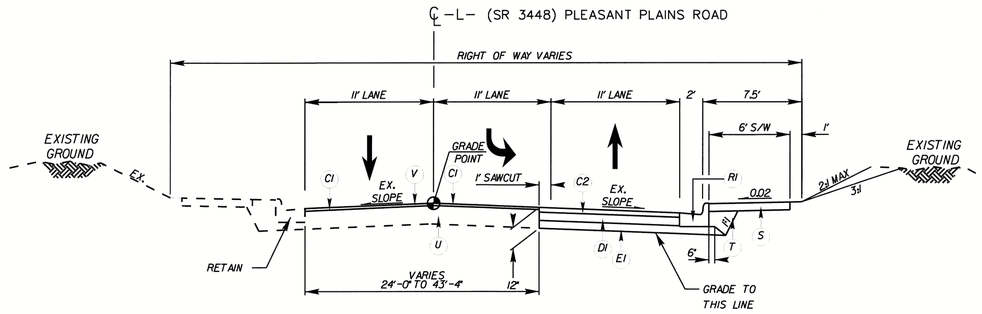

TYPICAL SECTION NO. 2

-L- STA. 90+47.80 TO -L- STA. 93+79.27

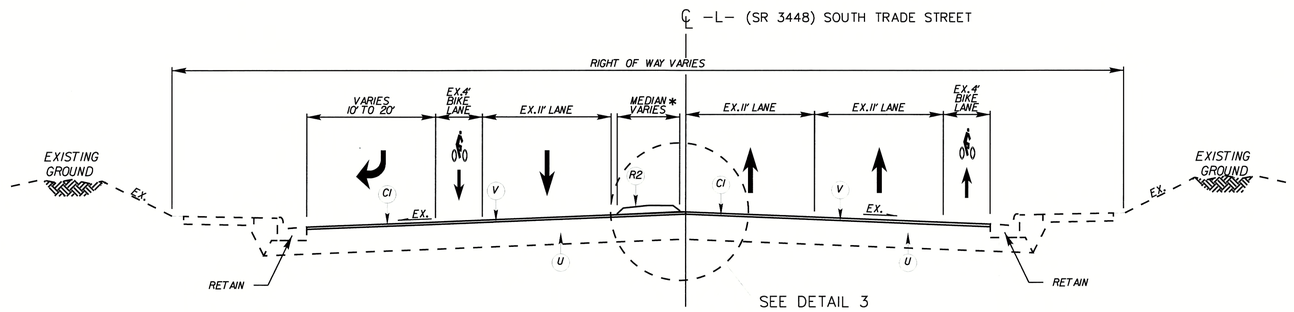

TYPICAL SECTION NO. 3

-L- STA. 95+80.56 TO -L- STA. 98+60.23

* STA 86+68.00 TO 89+26.12 0'-9.41'
STA 96+19.77 TO 96+40.29 0'-9.41'
STA 96+40.29 TO 98+60.23 9.41'-4.5'

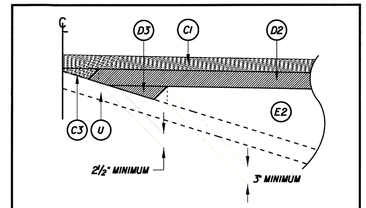

DETAIL SHOWING METHOD OF WEDGING

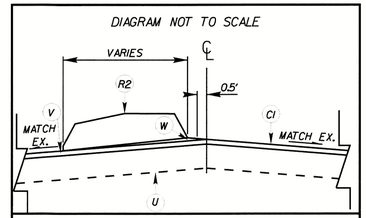

DETAIL 3

PAVEMENT SCHEDULE

CI	PROPOSED APPROX 1.5" ASPHALT CONCRETE SURFACE COURSE TYPE S9.5C, AT AN AVERAGE RATE OF 168 LBS. PER SQ. YD.
C2	PROPOSED APPROX 3" ASPHALT CONCRETE SURFACE COURSE TYPE S9.5C, AT AN AVERAGE RATE OF 168 LBS. PER SQ. YD. IN EACH OF TWO LAYERS.
C3	PROPOSED VAR. DEPTH ASPHALT CONCRETE SURFACE COURSE, TYPE S9.5C, AT AN AVERAGE RATE OF 112 LBS. PER SQ. YD. PER 1' DEPTH, TO BE PLACED IN LAYERS NOT LESS THAN ½" IN DEPTH OR GREATER THAN 2" IN DEPTH.
DI	PROPOSED APPROX. 4" ASPHALT CONCRETE INTERMEDIATE COURSE TYPE I19.0C, AT AN AVERAGE RATE OF 456 LBS. PER SQ. YD.
D2	PROPOSED VAR. DEPTH ASPHALT CONCRETE INTERMEDIATE COURSE, TYPE I19.0C, AT AN AVERAGE RATE OF 114 LBS. PER SQ. YD. PER 1" DEPTH TO BE PLACED IN LAYERS NOT LESS THAN 2.5" OR GREATER THAN 4" IN DEPTH.
D3	PROPOSED VAR. DEPTH ASPHALT CONCRETE INTERMEDIATE COURSE, TYPE I19.0C, AT AN AVERAGE RATE OF 114 LBS. PER SQ. YD. PER 1" DEPTH TO BE PLACED IN LAYERS NOT LESS THAN 2.5" OR GREATER THAN 4" IN DEPTH.
EI	PROPOSED APPROX. 5" ASPHALT CONCRETE BASE COURSE TYPE B25.0C, AT AN AVERAGE RATE OF 570 LBS. PER SQ. YD.
E2	PROP. APPROX. 3" ASPHALT CONCRETE BASE COURSE TYPE B25.0C, AT AN AVERAGE RATE OF 342 LBS. PER SQ. YD. IN EACH OF TWO LAYERS.
RI	PROPOSED 2'-6" CONCRETE CURB & GUTTER
R2	PROPOSED MONOLITHIC CONCRETE ISLAND (SURFACE MOUNTED)
S	PROPOSED 4" CONCRETE SIDEWALK
T	EARTH MATERIAL
U	EXISTING PAVEMENT
V	MILLING EXISTING PAVEMENT (1.5")
W	VARIABLE DEPTH ASPHALT PAVEMENT

NOTE: PAVEMENT EDGE SLOPES ARE 1:1 UNLESS OTHERWISE INDICATED

Kimley»Horn ©2016
200 S. TRYON ST. • CHARLOTTE, NC 28202

RIGHT-OF-WAY REV.
CONST. REV.

PROJECT REFERENCE NO.	SHEET NO.
44376.3.2	2A-1

ROADWAY DESIGN ENGINEER

PAVEMENT DESIGN ENGINEER

NORTH CAROLINA PROFESSIONAL SEAL 037923 ENGINEER FRANK D. MASTERSON, JR.
Signed by:
11/26/2017

DOCUMENT NOT CONSIDERED FINAL UNLESS ALL SIGNATURES COMPLETED

11/09/2015

REVISIONS

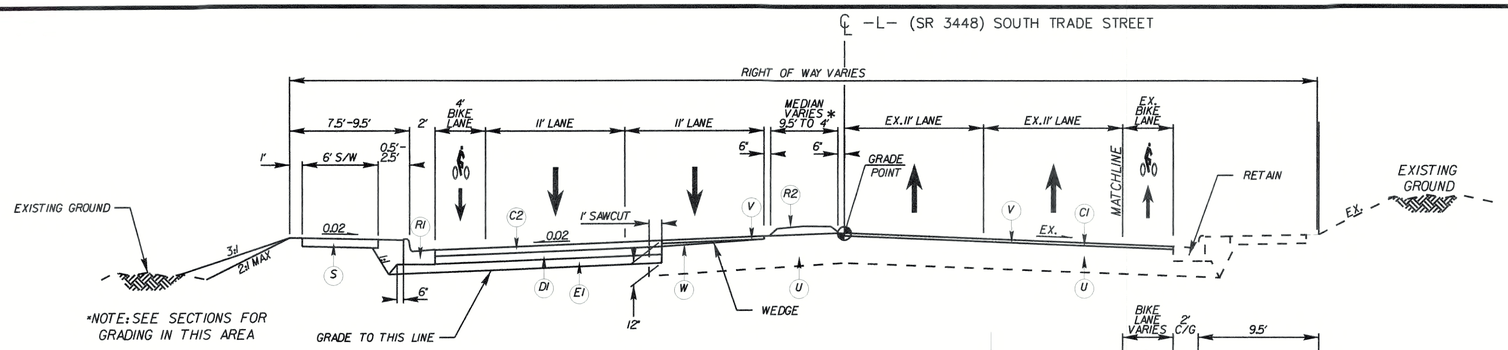

TYPICAL SECTION NO. 4

-L- STA. 98+60.23 TO -L- STA. 101+00.91

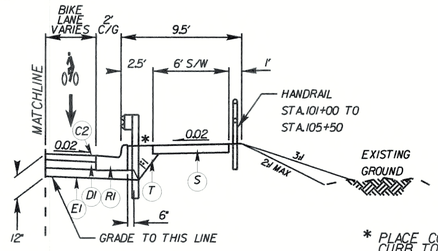

* PLACE CONCRETE FROM BACK OF CURB TO FRONT OF SIDEWALK IN AREAS OF GUARDRAIL

TYPICAL SECTION NO. 4A

-L- STA. 100+69.64 TO -L- STA. 101+00.91

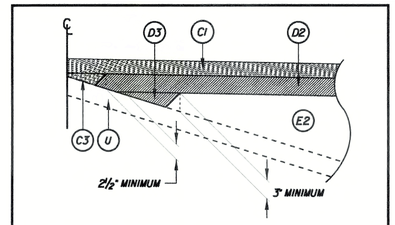

DETAIL SHOWING METHOD OF WEDGING

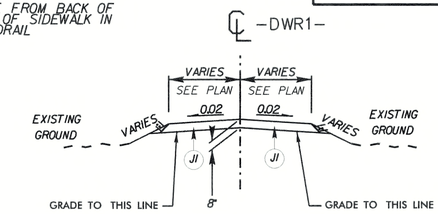

DRW1 TYPICAL SECTION

-DRW1- STA. 10+08.21 TO -DRW1- STA. 10+87.11

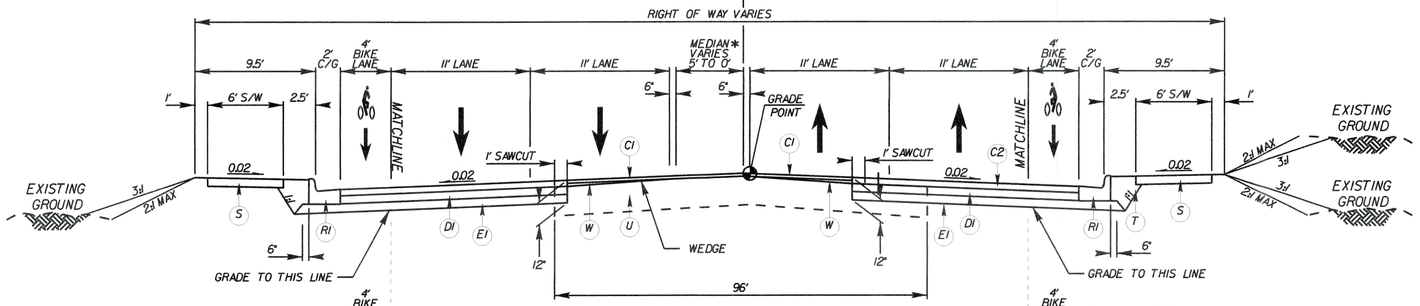

TYPICAL SECTION NO. 5

-L- STA. 101+00.91 TO -L- STA. 106+35.14

MEDIAN -L- STA. 101+00.91 TO -L- STA. 102+32.04

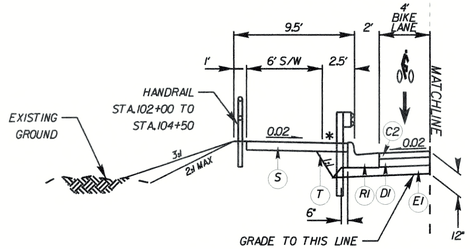

TYPICAL SECTION NO. 5A

CULVERT SECTION (LT)

-L- STA. 100+87.68 TO -L- STA. 104+75.01

PLACE FULL WIDTH SIDEWALK

STA. 100+85.666 TO 104+77.01 (LT)

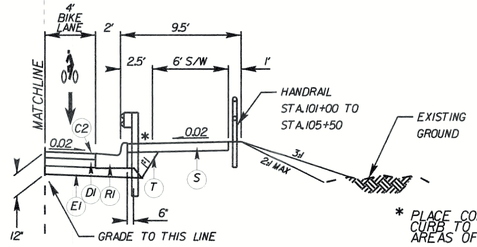

* PLACE CONCRETE FROM BACK OF CURB TO FRONT OF SIDEWALK IN AREAS OF GUARDRAIL

TYPICAL SECTION NO. 5B

CULVERT SECTION (RT)

-L- STA. 101+00.91 TO -L- STA. 105+80

PLACE FULL WIFTH SIDEWALK

STA.

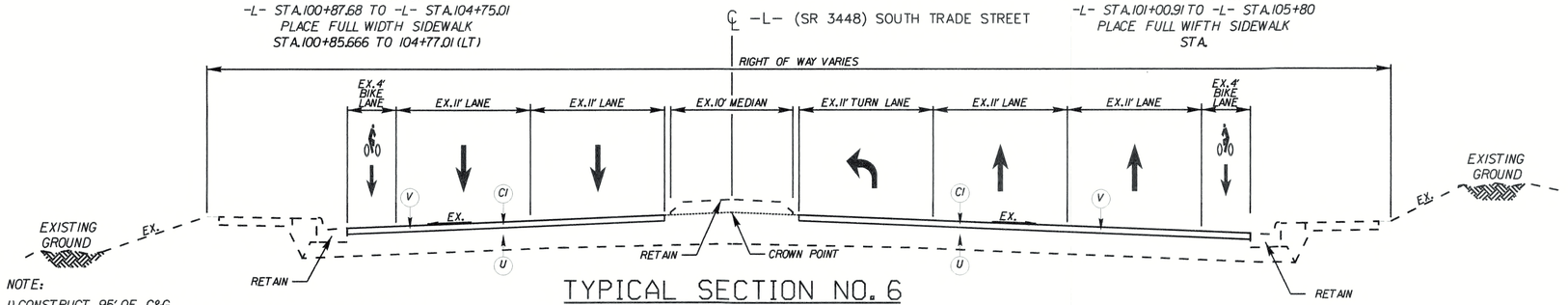

NOTE:

1) CONSTRUCT 95' OF C&G FROM STA. 106+35.14 TO CHAPHYN LANE TIE IN AT STA. 107+15.48

TYPICAL SECTION NO. 6

-L- STA. 106+35.14 TO -L- STA. 109+15.00

PAVEMENT SCHEDULE	
C1	PROPOSED APPROX 1.5" ASPHALT CONCRETE SURFACE COURSE TYPE S9.5C, AT AN AVERAGE RATE OF 168 LBS. PER SQ. YD.
C2	PROPOSED APPROX 3" ASPHALT CONCRETE SURFACE COURSE TYPE S9.5C, AT AN AVERAGE RATE OF 168 LBS. PER SQ. YD. IN EACH OF TWO LAYERS.
C3	PROPOSED VAR. DEPTH ASPHALT CONCRETE SURFACE COURSE, TYPE S9.5C, AT AN AVERAGE RATE OF 112 LBS. PER SQ. YD. PER 1" DEPTH. TO BE PLACED IN LAYERS NOT LESS THAN 1½" IN DEPTH OR GREATER THAN 2" IN DEPTH.
D1	PROPOSED APPROX. 4" ASPHALT CONCRETE INTERMEDIATE COURSE TYPE I19.0C, AT AN AVERAGE RATE OF 456 LBS. PER SQ. YD.
D2	PROPOSED VAR. DEPTH ASPHALT CONCRETE INTERMEDIATE COURSE, TYPE I19.0C, AT AN AVERAGE RATE OF 114 LBS. PER SQ. YD. PER 1" DEPTH TO BE PLACED IN LAYERS NOT LESS THAN 2.5" OR GREATER THAN 4" IN DEPTH.
D3	PROPOSED VAR. DEPTH ASPHALT CONCRETE INTERMEDIATE COURSE, TYPE I19.0C, AT AN AVERAGE RATE OF 114 LBS. PER SQ. YD. PER 1" DEPTH TO BE PLACED IN LAYERS NOT LESS THAN 2.5" OR GREATER THAN 4" IN DEPTH.
E1	PROPOSED APPROX. 6" ASPHALT CONCRETE BASE COURSE TYPE B25.0C, AT AN AVERAGE RATE OF 684 LBS. PER SQ. YD.
E2	PROP. APPROX. 3" ASPHALT CONCRETE BASE COURSE TYPE B25.0C, AT AN AVERAGE RATE OF 342 LBS. PER SQ. YD. IN EACH OF TWO LAYERS.
J1	PROPOSED 8" AGGREGATE BASE COURSE
R1	PROPOSED 2'-6" CONCRETE CURB & GUTTER
R2	PROPOSED MONOLITHIC CONCRETE ISLAND (SURFACE MOUNTED)
S	PROPOSED 4" CONCRETE SIDEWALK
T	EARTH MATERIAL
U	EXISTING PAVEMENT
V	MILLING EXISTING PAVEMENT (1.5")
W	VARIABLE DEPTH ASPHALT PAVEMENT

NOTE: PAVEMENT EDGE SLOPES ARE 1:1 UNLESS OTHERWISE INDICATED

Kimley»Horn ©2016
200 S. TRYON ST. • CHARLOTTE, NC 28202

RIGHT-OF-WAY REV.

CONST. REV.

PROJECT REFERENCE NO.	SHEET NO.
44376.3.2	2A-2

ROADWAY DESIGN ENGINEER

PAVEMENT DESIGN ENGINEER

NORTH CAROLINA PROFESSIONAL SEAL 037923 ENGINEER FRANK L. MASTERSON, JR.
11/16/2017

DOCUMENT NOT CONSIDERED FINAL UNLESS ALL SIGNATURES COMPLETED

11/13/2017

PROJECT REFERENCE NO.	SHEET NO.
44376.3.2	3B-1

DOCUMENT NOT CONSIDERED FINAL UNLESS ALL SIGNATURES COMPLETED



DocuSigned by: Frank Masterson
6DFB2B06CFF1412...

11/2/2017

"N" = DISTANCE FROM FACE OF CURB TO FACE OF GUARDRAIL.
TOTAL BERM WIDTH = DISTANCE FROM FACE OF CURB TO HINGE POINT.
FLARE LENGTH = DISTANCE FROM LAST SECTION OF PARALLEL GUARDRAIL TO END OF GUARDRAIL.
W = TOTAL WIDTH OF FLARE FROM BEGINNING OF TAPER TO END OF GUARDRAIL.
G = GATING IMPACT ATTENUATOR TYPE 350
NG = NON-GATING IMPACT ATTENUATOR TYPE 350

GUARDRAIL SUMMARY

SURVEY LINE	BEG. STA.	END STA.	LOCATION	LENGTH			WARRANT POINT		"N" DIST. FROM FOC	TOTAL BERM WIDTH	FLARE LENGTH		W		ANCHORS								IMPACT ATTENUATOR TYPE 350			SINGLE FACED GUARDRAIL	REMOVE EXISTING GUARDRAIL	REMARKS
				STRAIGHT	SHOP CURVED	DOUBLE FACED	APPROACH END	TRAILING END			APPROACH END	TRAILING END	APPROACH END	TRAILING END	XI MOD	XI	GREU, TL-2	GREU, MEDIAN	TYPE III	CAT-1	VI MOD	BIC	AT-1	EA	G	NG			
-L-	100+88.00	104+75.00	LT	312.5				104+25.00	0	2	50	50	1	1			2										412.5	427	
-L-	100+79.00	105+79.00	RT	400			101+40.00		0	2	50	50	1	1			2										500	401	
																											912.5	827	
			SAY														4										925	850.0	

PAVEMENT REMOVAL SUMMARY

SURVEY LINE	STATION	STATION	LOCATION LT/RT/CL	YD²
-L-	-L- STA. 86+68	-L- STA. 93+79	LT/RT	125
-L-	-L- STA. 98+60	-L- STA. 107+16	LT/RT	475
SAY:				600

REMOVAL OF EXISTING CONCRETE SIDEWALK

LINE	STATION TO STATION	LOCATION	SQ. YDS.
-L-	98+00 TO 100+00	LT/RT	100.0
-L-	87+73 TO 89+85	RT	118.0
-L-	90+07 TO 90+50	LT	24.0
-L-	90+48 TO 93+80	RT	185.0
-L-	96+09 TO 96+18	LT	9.0
-L-	104+53 TO 107+05	RT	140.0
TOTAL			576.0
SAY			600.0

SUMMARY OF EARTHWORK

IN CUBIC YARDS

LOCATION	UNCLASSIFIED EXCAVATION	UNDERCUT	EMBT+%	BORROW	WASTE
-L- STA 86+68.00 TO STA 109+15.00	792	0	22207	21415	0
PROJECT TOTALS	792	0	22207	21415	0
GRAND TOTALS	792		22207	21415	
SAY	800			21415	

NOTE: APPROXIMATE QUANTITIES ONLY. UNCLASSIFIED EXCAVATION, FINE GRADING, CLEARING AND GRUBBING, REMOVAL OF EXISTING PAVEMENT, AND BREAKING OF EXISTING PAVEMENT WILL BE PAID FOR AT THE CONTRACT LUMP SUM PRICE FOR "GRADING."

11/09/2015

DL62635

COMPUTED BY: F. MASTERSON DATE: 08/29/2017

CHECKED BY: M. SCOTT DATE: 9/08/2017

NORTH CAROLINA DEPARTMENT OF TRANSPORTATION
DIVISION OF HIGHWAYS

PROJECT NO.	SHEET NO.
U-5804B	3D-1

Note: Invert Elevations indicated are for Bid Purposes only and shall not be used for project construction stakeout.
See "Standard Specifications For Roads and Structures, Section 300-5".

LIST OF PIPES, ENDWALLS, ETC. (FOR PIPES 48 INCHES & UNDER)

| LINE & STATION | OFFSET | | STRUCTURE NUMBER FROM | STRUCTURE NUMBER TO | TOP ELEVATION FT. | INVERT ELEVATION FT. | INVERT ELEVATION FT. | MINIMUM REQUIRED SLOPE % | Drainage Pipe (RCP, CSP, CAAP, HDPE, or PVC) SIZE 12 | 15 | 18 | 24 | 30 | 36 | 42 | 48 | C. S. PIPE THICKNESS OR GAUGE 12 | 15 | 18 | 24 | 30 | 36 | 42 | 48 | R. C. PIPE CLASS III 12 | 15 | 18 | 24 | 30 | 36 | 42 | 48 | R. C. PIPE CLASS IV 12 | 15 | 18 | 24 | 30 | 36 | 42 | 48 | R. C. PIPE CLASS V 12 | 15 | 18 | 24 | 30 | 36 | 42 | 48 | DRAINAGE STRUCTURE MASONRY CY | QUANTITIES FOR DRAINAGE STRUCTURES NOTE: TOTAL LIN. FT. FOR PAY QUANTITY SHALL BE A + (1.3 X B) A: 0' THRU 5' EACH | B: 5' THRU 10' LIN. FT. | 10' AND ABOVE LIN. FT. | C.B. STD. 840.01 OR STD. 840.02 | FRAME, GRATES, AND HOOD STD. 840.03 GRATE TYPE E | F | G | CONCRETE TRANSITIONAL SECTION D.I. STD. 852.06 | C.B. STD. 852.04 OR STD. 852.05 | OPEN THROAT C.B. STD. 840.04 OR STD. 840.05 | CONCRETE BRIDGE APPROACH D.I. STD. 840.13 | D.I. STD. 840.14 OR STD. 840.15 | D.I. FRAME AND GRATES STD. 840.16 | G.D.I. TYPE "A" STD. 840.17 OR STD. 840.26 | G.D.I. TYPE "B" STD. 840.18 OR STD. 840.27 | G.D.I. TYPE "D" STD. 840.19 OR STD. 840.28 | G.D.I. (W.S. FLAT) FRAME WITH GRATE STD. 840.20 | G.D.I. (W.S. FLAT) FRAME W/ 2 GRATES STD. 840.20 | G.D.I. (W.S. SAG) FRAME W/ GRATE STD. 840.22 | G.D.I. (W.S. SAG) FRAME W/ 2 GRATES STD. 840.22 | G.D.I. (N.S. SAG) FRAME W/ GRATE STD. 840.24 | G.D.I. (N.S. SAG) FRAME W/ 2 GRATES STD. 840.24 | G.D.I. (N.S. FLAT) FRAME W/ GRATE STD. 840.29 | G.D.I. (N.S. FLAT) FRAME W/ 2 GRATES STD. 840.29 | DRIVEWAY D.I. STD. 840.30 | FRAME W/ GRATE FOR DRIVEWAY STD. 840.30 | J.B. STD. 840.31 OR STD. 840.32 | ANGLED VANE GRATES AND FRAMES STD. 840.33 | T.B.J.B. STD. 840.34 | T.B.D.I. STD. 840.35 | T.B.D.I. FOR STEEL GRATES STD. 840.36 | M.H. STD. 840.51, STD. 840.52, OR STD. 840.53 | M.H. FRAME AND COVER STD. 840.54 | ADJUST C.B. | ADJUST D.I. | ADJUST J.B. | 24" C.S. ELBOW | PIPE REMOVAL LIN. FT. | REMARKS |
|---|---|---

REVISIONS

-L-
PI Sta 89+55.19
△ = 41° 19' 04.6" (LT)
D = 14° 19' 26.2"
L = 288.45'
T = 150.82'
R = 400.00'
DS = 35 MPH
SE = .06
RO = EXIST

DETAIL 1
CUT DITCH
(Not to Scale)

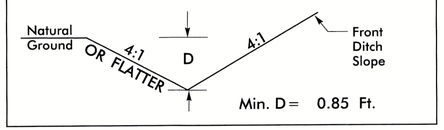

Min. D = 0.85 Ft.

FROM STA. 88+50 TO STA. 89+50 – LT.

Kimley»Horn ©2016
200 S. TRYON ST. • CHARLOTTE, NC 28202

RIGHT-OF-WAY REV.
CONST. REV.

PROJECT REFERENCE NO.	SHEET NO.
44376.3.2	4
R/W SHEET NO.	

ROADWAY ENGINEER
NORTH CAROLINA PROFESSIONAL SEAL 037923 ENGINEER FRANK D MASTERSON
10/26/2017

HYDRAULICS ENGINEER
NORTH CAROLINA PROFESSIONAL SEAL 037923 ENGINEER FRANK D MASTERSON
10/26/2017

DOCUMENT NOT CONSIDERED FINAL UNLESS ALL SIGNATURES COMPLETED

NAD 83/ NAVD 88

22761293
Charles Labree
& Laureli Labree
1508 Pleasant Plains Road

22761298
Gregory Litowski
1502 Pleasant Plains Road

303'

BEGIN PROJECT U-5804B
BEGIN CONSTRUCTION
-L- Sta.86+68.00
BEGIN MILLING AND RESURFACING

22761289
Howard Lewis
& Pamela Lewis
1432 Pleasant Plains Road

PC Sta. 88+04.37

22761290
Howard Lewis
& Pamela Lewis
1432 Pleasant Plains Road

TIE TO EXISTING

20' SHLDR TAPER

RETAIN

EX.R/W

RE-GRADE DITCH

+30.00 EX. ROW
+50.00 35.00 LT

+25.00 39.00 LT

CONSTRUCTION LIMITS

28C
28F
29C

34'
11'
11'
35'
-L-

SR 3448 (PLEASANT PLAINS ROAD)
N 34° 54' 02.3" W

2' FDPS
2GI
15" RCP - III
400
401
403
404
405
402
8" SS
R 608'
30C
30F
26F
33C
36F

EX.R/W

STA.87+73.00
OFF: 23.69
TIE TO EX.

5' SIDEWALK

SEE SEWER IMPROVEMENTS BY HINDE SHEET UC-4

STA.89+27.61
OFF: 33.50

STA.89+69.90
OFF: 34.97

REPLACE CURB RAMP IN-KIND

STA.89+90.23
OFF: 45.82
TIE TO EX.

50' SHLDR TAPER

22731197
Melda M
& Hugh Robt & W Privette
1515 Pleasant Plains Road

22731162
Hugo Wiens
& Lydia Wiens
1425 Pleasant Plains Road

22731129
John Petoskey
& Sara Petoskey
1631 Marque Place

PT Sta.90+92.83

22761292
Gregorio Lopez
& Maria Del Carmen
Miranda
1406 Pleasant Plains Road

TIE TO EXISITING END SHOULDER AND BEGIN C & G

NCDOT STD.848.03

STA.90+50.02
OFF: 22.49
TIE TO EX.

22761291
Nga Tang
1410 Pleasant Plains Road

+49.00 EX. ROW

REBUILD S/W

+10.00 35.00 LT

ADJUST

2' FDPS

15" RCP - III

REMOVE 18" RCP

18" RCP - IV

MATCHLINE -L- STA 91+00 (SEE SHEET 5)

STA.90+07.51
OFF: 18.84
BEGIN CONST.

R 25'

+60.00 EX. ROW

6' S/W IN THIS LOCATION

10:1 TAPER EXISTING S/W TO BACK OF CURB

STA.90+48.55
OFF: 26.50
TIE TO EX. POLE TO REMAIN

22731201
Jayantilal Mehta,
Asha Trivedi &
Vipulkumar Trivedi
1630 Marque Place

286' LANE TAPER

EX.R/W

9

2'-6" C&G
R 150'

44.4'

15" RCP - III

ADJUST

R 22'

CR

2'

MARQUE PL.

2/18/2016

8

Kimley»Horn ©2016
200 S. TRYON ST. • CHARLOTTE, NC 28202

RIGHT-OF-WAY REV.
CONST. REV.

PROJECT REFERENCE NO.	SHEET NO.
44376.3.2	5
R/W SHEET NO.	

ROADWAY ENGINEER	HYDRAULICS ENGINEER
NORTH CAROLINA PROFESSIONAL SEAL 037923 ENGINEER FRANK D. MASTERSON, JR.	NORTH CAROLINA PROFESSIONAL SEAL 037923 ENGINEER FRANK D. MASTERSON, JR.
10/26/2017	10/26/2017

DOCUMENT NOT CONSIDERED FINAL UNLESS ALL SIGNATURES COMPLETED

REVISIONS

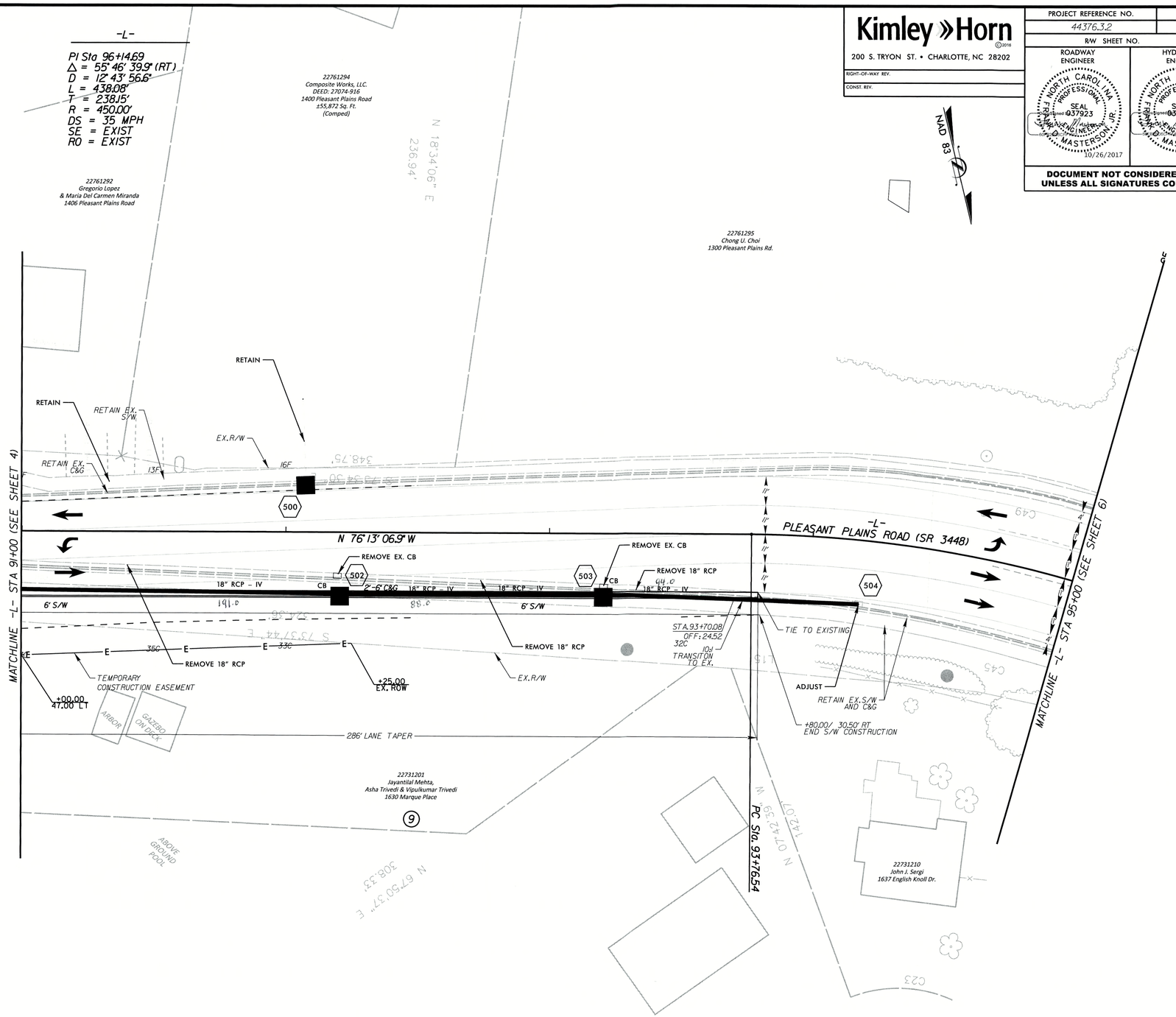

2/18/2016

9

Kimley»Horn ©2016
200 S. TRYON ST. • CHARLOTTE, NC 28202

RIGHT-OF-WAY REV.
CONST. REV.

PROJECT REFERENCE NO.	SHEET NO.
44376.3.2	6

R/W SHEET NO.

ROADWAY ENGINEER	HYDRAULICS ENGINEER
NORTH CAROLINA PROFESSIONAL SEAL 037923 ENGINEER FRANK D. MASTERSON, JR. 11/13/2017	NORTH CAROLINA PROFESSIONAL SEAL 037923 ENGINEER FRANK D. MASTERSON, JR. 11/13/2017

DOCUMENT NOT CONSIDERED FINAL UNLESS ALL SIGNATURES COMPLETED

REVISIONS

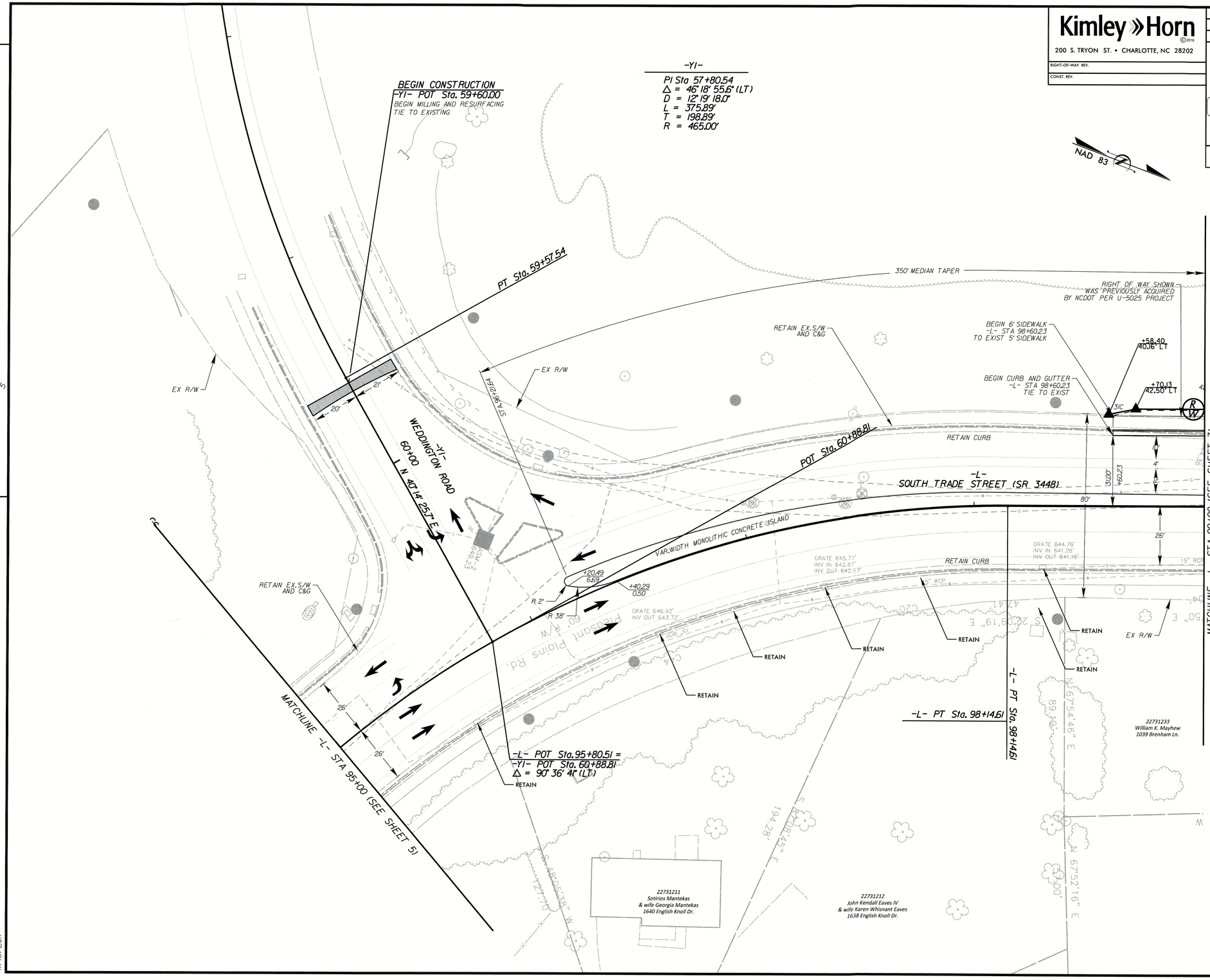

11/13/2017

REVISIONS

2/18/2016

-DRW1-	
PI Sta 10+38.49	PI Sta 10+69.12
△ = 13° 24' 16.7" (RT)	△ = 26° 48' 34.1" (LT)
D = 44° 04' 25.2"	D = 88° 08' 50.5"
L = 30.41'	L = 30.41'
T = 15.28'	T = 15.49'
R = 130.00'	R = 65.00'
DS = 20 MPH	DS = 15 MPH
SE = NC	SE = NC
RO = N/A	RO = N/A

Kimley»Horn ©2016
200 S. TRYON ST. • CHARLOTTE, NC 28202
RIGHT-OF-WAY REV.
CONST. REV.

PROJECT REFERENCE NO.	SHEET NO.
44376.3.2	7
R/W SHEET NO.	

ROADWAY ENGINEER — NORTH CAROLINA PROFESSIONAL SEAL 037923 ENGINEER FRANK O. MASTERSON, JR. — 10/26/2017
HYDRAULICS ENGINEER — NORTH CAROLINA PROFESSIONAL SEAL 037923 ENGINEER FRANK O. MASTERSON, JR. — 10/26/2017

DOCUMENT NOT CONSIDERED FINAL UNLESS ALL SIGNATURES COMPLETED

NAD 83/NAVD 88

MATCHLINE -L- STA 99+00 (SEE SHEET 6)

MATCHLINE -L- STA 104+00 (SEE SHEET 8)

-L-
SOUTH TRADE STREET (SR 3448)
N 20° 26' 26.9" W

-DRW1- POT Sta. 10+00.00
BEGIN CONSTRUCTION
-DRW1- POT Sta.10+08.21
TIE TO EXISTING
-DRW1- PC Sta. 10+23.21
-DRW1- PRC Sta. 10+53.63
-DRW1- PT Sta. 10+84.04

-L- POC Sta. 100+31.09
-DRW1- POT Sta. 11+28.62
△ = 89° 49' 01.96"

-L- POT Sta. 100+22.24 =
-Y2- POT Sta. 90+68.65
△ = 91° 24' 28.66"

BEGIN CONSTRUCTION
-Y2- POT Sta.91+19.46

N 68° 09' 04.4" E
N 69° 44' 31" E
N 68° 08' 48.6" E

1 — 22729101 — Williams Business Properties LLC — 1700 Weddington Rd.
2 — 22731101 — Dean E. Boike & wife Janet P. Boike — 1038 Brenham Ln.
3 — 22731199 — Mecklenburg County DEED: 5066-566 — S. Trade St. ±132,669 Sq. Ft. (Comped)
4 — 22721716 — Korean Baptist Church of Charlotte — S. Trade St.
5 — 22729105 — Town of Matthews S. Trade St.
22731233 — William K. Mayhew — 1039 Brenham Ln.

TEMPORARY CONSTRUCTION EASEMENT (TYP)
SEE EROSION CONTROL SHEET I3 AND CROSS SECTIONS FOR GRADING IN THIS AREA
SEE UTILITY PLAN BY HINDE FOR SEWER RELOCATION IN THIS AREA SHEET UC-7
POTENTIAL FUTURE TRAIL ALIGNMENT
TEMPORARY DUKE POLE
CHANNEL ALIGNMENT BASED ON CSR 07/2013
END CULVERT -L- STA.102+88.60
PROPOSED HEADWALL EXTENSION SEE STRUCTURAL PLAN SHEETS SI- SI6
CONTRACTOR TO REMOVE UP TO 3.5' OF EXISTING SEDIMENT WITHIN THE LIMITS OF THE EXISTING CULVERT. PRIOR TO REMOVAL CONTACT NCDOT INSPECTOR
PLACE 2 TONS CLASS I RIP RAP PLACE 6 S.Y. FF
15" CMP
SEE WATER IMPROVEMENTS BY HINDE UNDER SHEET UC-7
SEE SHEETS SI-SI6 FOR HEADWALL CONSTRUCTION
FUTURE PEDESTRIAN TUNNEL.
SEE DETAIL 2 SHEET 2C FOR GREENWAY TRAIL HEAD DETAILS
INSTALL 312.5 LF OF GUARDRAIL. SEE 2018 NCDOT STD.
DUKE POLE (TYP.)
BEGIN HANDRAIL STA.102+00 SEE SHEET 2C-1
133' TAPER
15" RCP - IV
350' MEDIAN TAPER
BEGIN 10' TRANSITION TO 2' PLANTING STRIP -L- STA 99+40.00
43C REMOVE 15" RCP
REMOVE 15" RCP
REMOVE CB
NCDOT STD.848.03
4' MONOLITHIC CONCRETE ISLAND
RETAIN CURB
RETAIN 30" RCP
RETAIN 15" RCP
RETAIN CB
EDGE MILL ADJACENT TO EXISTING CURB (TYP)
ADJUST JB
ADJUST CB
TIE TO EXISTING C&G STA 100+69.63
BEGIN SIDEWALK -L- STA 100+59.38
BEGIN HANDRAIL STA.101+00 SEE SHEET 2C-1
INSTALL 400 LF OF GUARDRAIL. SEE 2018 NCDOT STD.
FUTURE PEDESTRIAN TUNNEL.
POTENTIAL FUTURE GREENWAY ALIGNMENT
SEE SEWER IMPROVEMENTS BY HINDE UNDER SEE SHEET UC-7
SEE UTILITY PLAN UC-7 BY HINDE FOR SEWER RELOCATION IN THIS AREA.
PLACE 7 TONS CLASS I RIP RAP PLACE 15 S.Y. FF
CONTRACTOR TO REMOVE UP TO 3.5' OF EXISTING SEDIMENT WITHIN THE LIMITS OF THE EXISTING CULVERT. PRIOR TO REMOVAL CONTACT NCDOT INSPECTOR
BEGIN CULVERT -L- STA.102+97.00
PROPOSED HEADWALL EXTENSION SEE STRUCTURAL PLAN SHEETS SHEETS SI- SI6
CHANNEL ALIGNMENT BASED ON CSR 07/2013
24" CMP WITH ELBOWS
24" RCP - IV
6' SIDEWALK
4' 2'-6" C&G
50' TAPER
133' TAPER
24" WL
PDE
FES
CB
JB
MH
SEALED AND ACCESS RIM 620.65 INV IN 608.01 INV OUT 607.89
Grate 642.97 INV IN 639.71 INV OUT 639.61
Grate 642.68 INV OUT 639.0
Grate 642.08 INV IN 640.08 INV OUT 639.98
SD-MH RIM 644.00 INV IN 639.6 INV OUT 639.3
RIM 642.23 NE INV OUT 634.03
RIM 641.23 NE INV IN 626.53 SW INV IN 625.86 NW INV OUT 626.42
RIM 642.33 IN 634.53 15" RCP
RIM 626.82 S INV IN 619.32 NE INV OUT 619.20
RIM 622.43 S INV IN 610.13 NE INV IN 609.31 SW INV OUT 609.17
RIM 628.57 Top of 24" RCP
RIM 626.72 INV IN 614.73
24" Waterline
615.23' Top of 24" RCP
Junction Box
Headwall 640.18 628.41 Conc Pipe 15.5 ARCH
Headwall 638.53 628.72
TOP HEADWALL 628.68 INV IN 613.68 INV OUT 613.58
TOP HEADWALL 628.68 INV IN 613.68
Existing 20' Sanitary Sewer Easement
Existing 25' x 25' Sign Easement
Existing 15' Sanitary Sewer Easement
Existing 60' Fiber Optic Easement
Existing 30' Fiber Optic Easement
Existing 15' Fiber Optic Easement
Existing 10' Fiber Optic Easement
Existing 10' Power Easement
Existing 10' Power Easement
Existing 10' Power

-L-	-Y3-
PI Sta 106+95.93	PI Sta 403+44.46
Δ = 20° 18' 51.5" (RT)	Δ = 28° 27' 28.8" (RT)
D = 5° 43' 46.5"	D = 19° 05' 54.9"
L = 354.55'	L = 149.01'
T = 179.16'	T = 76.07'
R = 1,000.00'	R = 300.00'
DS = 40 MPH	DS = 40 MPH
SE = EXIST	SE = EXIST
RO = EXIST	RO = EXIST

REVISIONS

2/18/2016

Kimley»Horn ©2016
200 S. TRYON ST. • CHARLOTTE, NC 28202

RIGHT-OF-WAY REV.

CONST. REV.

PROJECT REFERENCE NO.	SHEET NO.
44376.3.2	8
R/W SHEET NO.	

ROADWAY ENGINEER — NORTH CAROLINA PROFESSIONAL SEAL 037923 ENGINEER MASTERSON, JR. — 10/26/2017

HYDRAULICS ENGINEER — NORTH CAROLINA PROFESSIONAL SEAL 037923 ENGINEER MASTERSON, JR. — 10/26/2017

DOCUMENT NOT CONSIDERED FINAL UNLESS ALL SIGNATURES COMPLETED

NAD 83

-Y3- PRC Sta. 402+68.38

-Y3- CHAPHYN LANE

N 66° 59' 19.6" E

-Y3- PT Sta. 404+17.39

END CONSTRUCTION
-Y3- STA 404+34.12

-L- POC Sta. 107+53.76 =
-Y3- POT Sta. 405+00.00
Δ = 106° 08' 55.8"

END CONSTRUCTION
-L- POT Sta. 109+15.00
END MILLING AND RESURFACING
TIE TO EXISTING

-L- SOUTH TRADE STREET (SR 3448)

MATCHLINE -L- STA 104+00 (SEE SHEET 7)

-L- PC Sta. 105+16.78

-L- PT Sta. 108+71.33

RETAIN EXISTING MONOLITHIC CONCRETE ISLAND AND ISLAND CURB RAMPS

RIGHT OF WAY SHOWN WAS PREVIOUSLY ACQUIRED BY NCDOT PER U-5205 PROJECT

RELOCATE FIRE HYDRANT SEE UTILITY PLAN BY HINDE

-L- POC Sta.106+76.22
BEGIN MILLING AND RESURFACING

CONTRACTOR TO AVOID CONFLICT WITH EXISTING GAS AND WATER

MAINTAIN RAMP
END SIDEWALK
TIE TO EXISTING
-L- STA 107+05.29
OFF: 50.69' LT

DEMO AND RECONSTRUCT 5' MONOLITHIC CONC ISLAND

PIPE REMOVED WITH SOUTH TRADE STREET PROJECT

RETAIN

ADJUST

RETAIN CURB

RETAIN CB

RETAIN 18" RCP

RETAIN EXISTING MONOLITHIC CONCRETE ISLAND

END HANDRAIL STA 104+50 SEE SHEET 2C-1

REMOVE GUARDRAIL

EXISTING R/W

PROPOSED R/W

SEE WATER IMPROVEMENTS BY HINDE UNDER SHEET UC-8

TEMP. CONSTRUCTION EASEMENT

REMOVE 18" RCP

REMOVE CB

REMOVE 24" RCP

ADJUST CB

END HANDRAIL STA 105+50 SEE SHEET 2C-1

END CURB AND GUTTER TIE TO EXISTING -L- STA 106+35.14 OFF: 27.89' RT

END SIDEWALK TIE TO EXISTING -L- STA 106+35.01 OFF: 36.51' RT

RIGHT OF WAY SHOWN WAS PREVIOUSLY ACQUIRED BY THE TOWN OF MATTHEWS

355' TAPER

280' TAPER

22721716
Korean Baptist Church of Charlotte
S. Trade St.

22721715
Korean Baptist Church of Charlotte
S. Trade St.

Kimley»Horn ©2016
200 S. TRYON ST. • CHARLOTTE, NC 28202

RIGHT-OF-WAY REV.

CONST. REV.

PROJECT REFERENCE NO.	SHEET NO.
44736.3.2	9

ROADWAY DESIGN ENGINEER

NORTH CAROLINA PROFESSIONAL SEAL 037923 ENGINEER FRANK D MASTERSON, JR.
Signed
10/26/2017

HYDRAULICS ENGINEER

NORTH CAROLINA PROFESSIONAL SEAL 037923 ENGINEER FRANK D MASTERSON, JR.
Signed
10/26/2017

DOCUMENT NOT CONSIDERED FINAL UNLESS ALL SIGNATURES COMPLETED

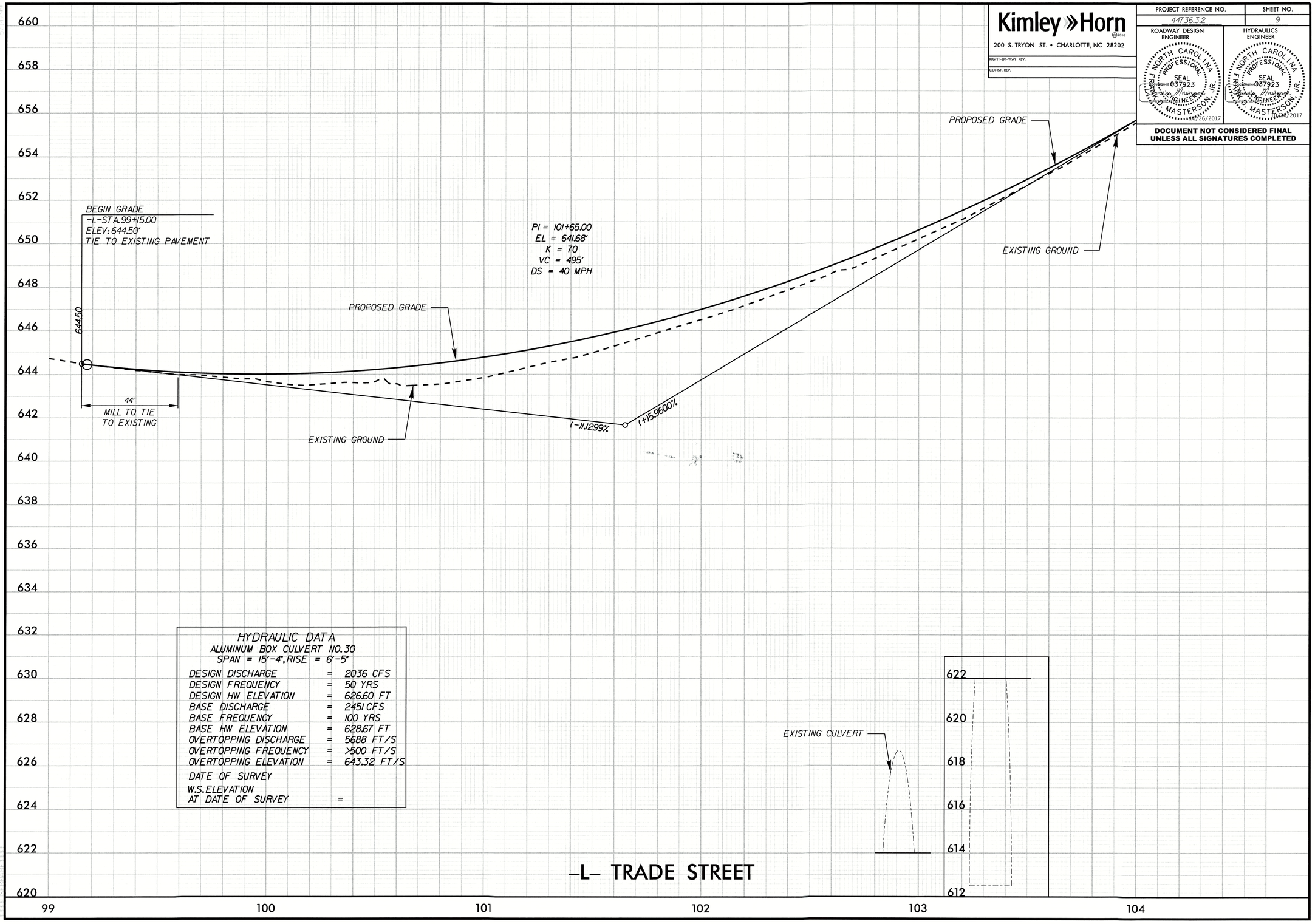

HYDRAULIC DATA
ALUMINUM BOX CULVERT NO.30
SPAN = 15'-4", RISE = 6'-5"

DESIGN DISCHARGE	=	2036 CFS
DESIGN FREQUENCY	=	50 YRS
DESIGN HW ELEVATION	=	626.60 FT
BASE DISCHARGE	=	2451 CFS
BASE FREQUENCY	=	100 YRS
BASE HW ELEVATION	=	628.67 FT
OVERTOPPING DISCHARGE	=	5688 FT/S
OVERTOPPING FREQUENCY	=	>500 FT/S
OVERTOPPING ELEVATION	=	643.32 FT/S
DATE OF SURVEY		
W.S. ELEVATION AT DATE OF SURVEY	=	

Kimley»Horn
©2016
200 S. TRYON ST. • CHARLOTTE, NC 28202

RIGHT-OF-WAY REV.

CONST. REV.

PROJECT REFERENCE NO.	SHEET NO.
44736.3.2	10

ROADWAY DESIGN ENGINEER

NORTH CAROLINA PROFESSIONAL SEAL 037923 ENGINEER TRAVIS W. MASTERSON, JR.
Signed by Kimley-Horn and Associates, Inc.
10/26/2017

HYDRAULICS ENGINEER

NORTH CAROLINA PROFESSIONAL SEAL 037923 ENGINEER TRAVIS W. MASTERSON, JR.
Signed by Kimley-Horn and Associates, Inc.
10/26/2017

DOCUMENT NOT CONSIDERED FINAL UNLESS ALL SIGNATURES COMPLETED

688
686
684
682
680
678
676
674
672
670
668
666
664
662
660
658
656
654
652
650
648

104 105 106 107 108 109

BEGIN MILLING AND RESURFACING
TO TIE TO EXISTING
-L-STA.105+49.04

PROPOSED GRADE

PI = 105+05.00
EL = 661.94'
K = 82
VC = 185'
DS = 40 MPH

(+)15.9600%

(+)3.7000%

(+)3.7000%

EXISTING GROUND

PI = 106+76.22
EL = 668.27'

END GRADE
-L-STA.106+76.22
ELEV: 668.27'

(+)3.6244%

EXISTING
MONOLITHIC TO
REMAIN

(+)13.6244%

(+)2.3000%

PI = 108+18.74
EL = 673.44'
K = 83
VC = 110'
DS = 40 MPH

END MILLING AND RESURFACING
-L-STA.109+15.00
ELEV: 675.65'

675.65

TIE EQUALITY
-L-STA.107+53.76
-Y3-STA.405+00.00
ELEV: 671.18'

-L- TRADE STREET

PROJ. REFERENCE NO.	SHEET NO.
44376.3.2	X-1

U-5804B - GRADING, DRAINAGE, PAVING AND STRUCTURE
CROSS SECTION INDEX

-L- SR 3448 (SOUTH TRADE STREET) X-2 THRU X-11

11/1/2017 K:\CHL_PRJ\0036319 U-5804B Trade\Roadway\XSC\U5804B_rdy_xpl_1sht.dgn

0 5 10	PROJ. REFERENCE NO.	SHEET NO.
	44376.3.2	X-2

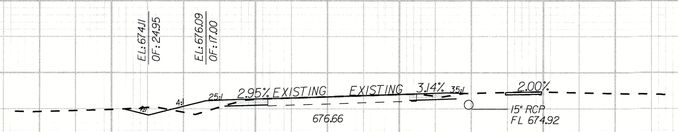

88+50.00

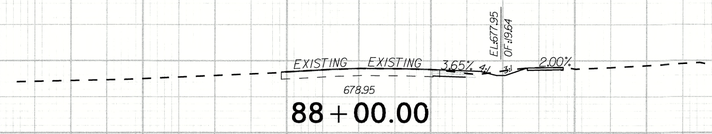

88+00.00

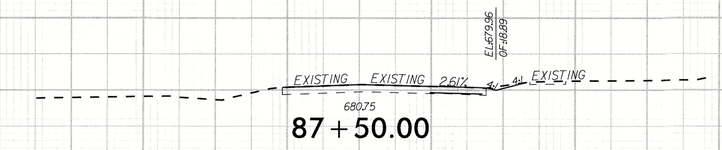

87+50.00

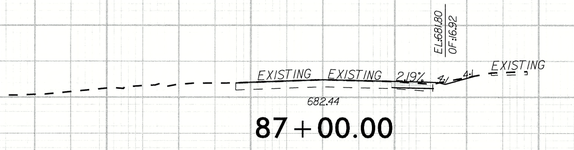

87+00.00

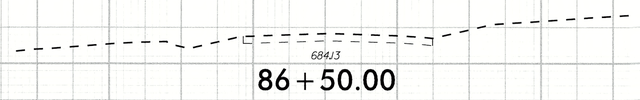

86+50.00

-L- PLEASANT PLNS.RD.(SR3448)

NORTH CAROLINA PROFESSIONAL SEAL 037923 ENGINEER FRANK D MASTERSON, JR

DocuSigned by: Frank D Masterson 10/26/2017
60F82B06CFF1412...

K:\CHL_PRJ\0110363\9 U-5804B Trade\Roadway\XSCU5804B_rdy_xpl_Ldgn

10/26/2017

0 5 10	PROJ. REFERENCE NO.	SHEET NO.
	44376.3.2	X-3

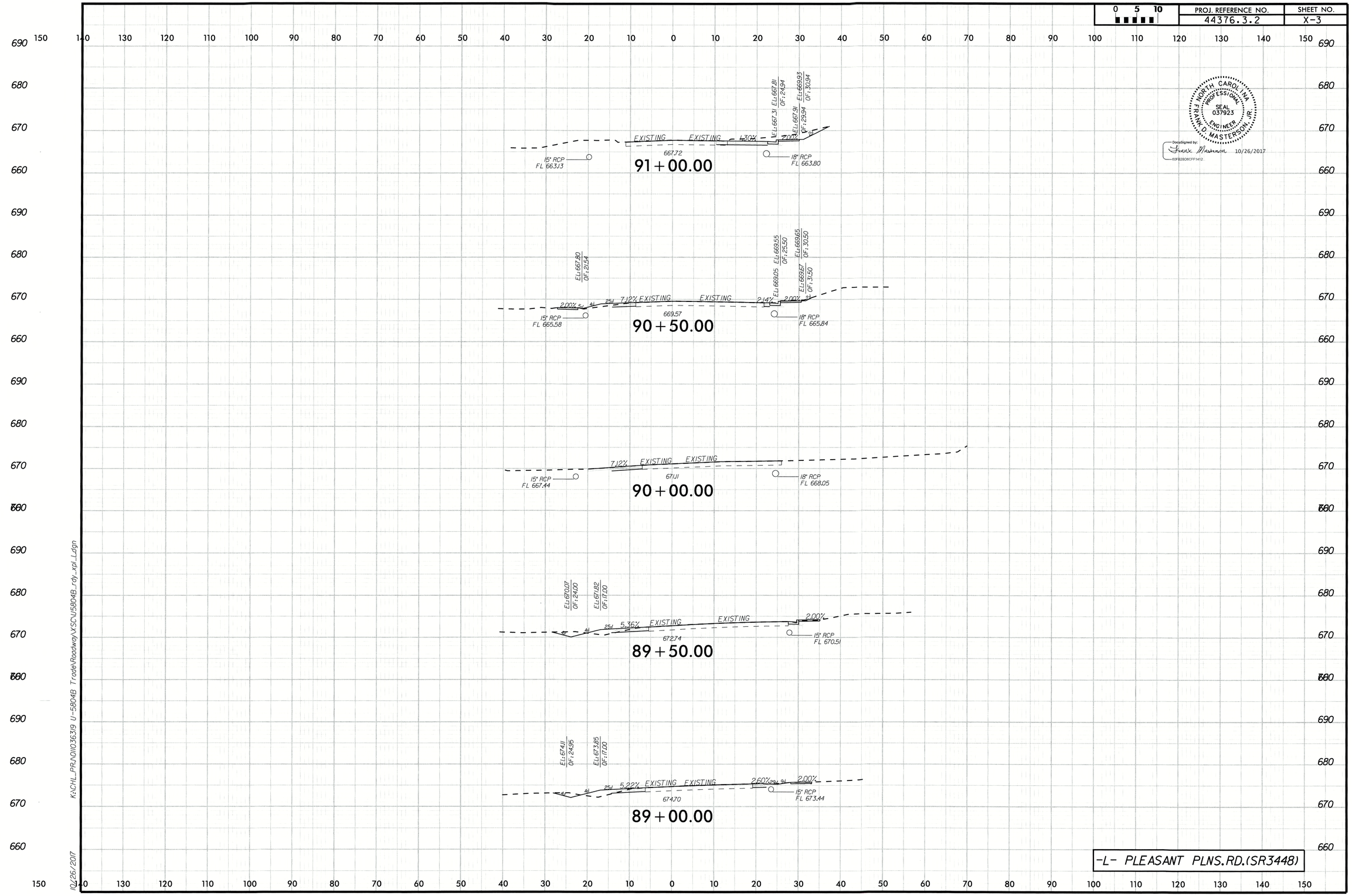

NORTH CAROLINA PROFESSIONAL SEAL 037923 ENGINEER FRANK D. MASTERSON, IV

DocuSigned by: Frank Masterson 10/26/2017
60FB2B06CFF1412

K:\CHL_PRJ\01036319 U-5804B Trade\Roadway\XSC\U5804B_rdy_xpl_L.dgn

10/26/2017

0 5 10

PROJ. REFERENCE NO.
44376.3.2

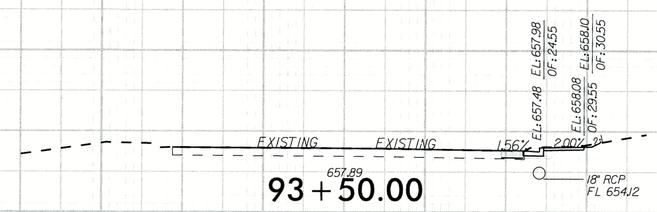

93 + 50.00

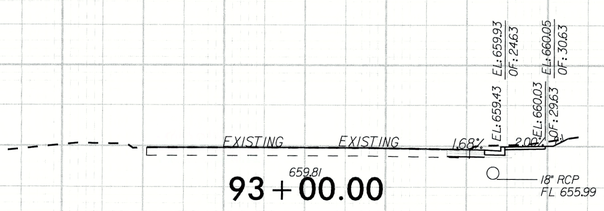

93 + 00.00

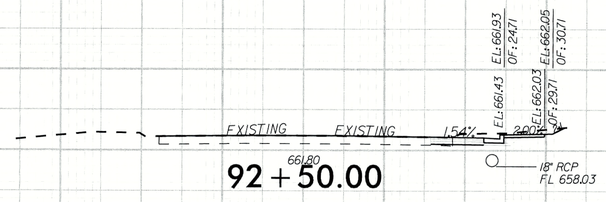

92 + 50.00

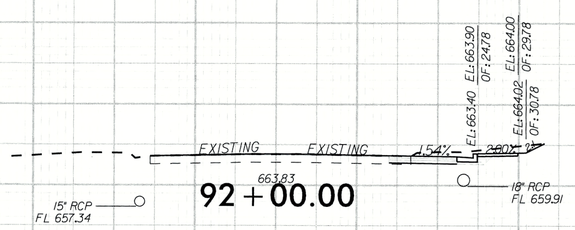

92 + 00.00

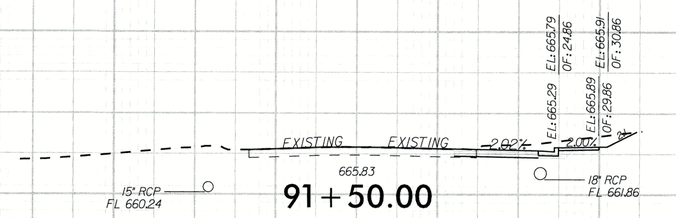

91 + 50.00

NORTH CAROLINA
PROFESSIONAL
SEAL
037923
ENGINEER
FRANK D MASTERSON, JR

DocuSigned by:
Frank Masterson
60F82B06CFF1412...
10/26/2017

-L- TRADE STREET (SR34

K:\CHL_PRJ\01036319 U-5804B TradeRoadway\XSC\U5804B_rdy_xpl_L.dgn

10/26/2017

0 5 10	PROJ. REFERENCE NO.	SHEET NO.
	44376.3.2	X-5

NORTH CAROLINA PROFESSIONAL SEAL 037923 ENGINEER FRANK D. MASTERSON, JR.

DocuSigned by: Frank Masterson 10/26/2017
60F9E8D8CFF1412...

150 140 130 120 110 100 90 80 70 60 50 40 30 20 10 0 10 20 30 40 50 60 70 80 90 100 110 120 130 140 150

670 660 650 640 630

EL:644.88 OF:3.00 EL:644.95 OF:27.23 | EL:645.08 OF:4.70 EL:645.10 OF:0.50 | EL:644.78 OF:25.54

2.00% EL:644.76 2.00% EXISTING EXISTING

644.09

99+50.00

EL:645.53 OF:28.75 | EL:645.74 OF:5.13 EL:645.75 OF:0.50 | EL:645.22 OF:25.31

2.09% EL:645.53 2.00% EXISTING EXISTING

644.74

99+00.00

EL:645.14 OF:31.00 | EL:645.25 OF:5.47 EL:645.20 OF:0.50 | EL:644.68 OF:25.30

EXISTING EXISTING

645.19

98+60.23

656.07

18" RCP FL 652.23

94+00.00

-L- TRADE STREET (SR3448)

K:\CHL_PROJ\0II036319 U-5804B TradeRoadway\VSC\U5804B_rdy_xpl_Ldgn

10/26/2017

0 5 10	PROJ. REFERENCE NO.	SHEET NO.
	44376.3.2	X-6

150 140 130 120 110 100 90 80 70 60 50 40 30 20 10 0 10 20 30 40 50 60 70 80 90 100 110 120 130 140 150

660 650 640 630

NORTH CAROLINA PROFESSIONAL SEAL 037923 ENGINEER FRANK D. MASTERSON, JR.

DocuSigned by: Frank Masterson 10/26/2017
60FB2B0B6CFF1412...

EL641.04 OF-9.40
CENTERLINE FUTURE TRAIL
EL641.29 OF-7.68
14.1 %
2:1
2.00%
2.00%
EL644.79
2.00%
EL644.13
2.00%
2:1
15" RCP FL 639.79
643.85

101+00.00

EL640.36 OF-75.95
EL643.06 OF-62.38
5:1
2:1
2.00%
2.00%
EL644.23
2.00%
15" RCP FL 639.98
643.67
15" RCP FL 634.73

100+50.00

EL639.80 OF-74.96
EL643.12 OF-49.79
4.26%
2.00%
2.00%
EL644.08
2.00%
5.73 %
TIE TO BRENHAM LANE
15" RCP FL 640.04
643.55

100+23.49

EL643.77 OF-40.50
EL643.67 OF-35.50
EL643.13
EL643.91 OF-4.50
EL644.05 OF-0.50
EL643.25 OF-23.11
2.00%
2.00%
2.65%
2.00%
15" RCP FL 640.09
643.67

100+00.00

-L- TRADE STREET (SR3448)

K:\CHL_PRJ\DII\036319 U-5804B Trade\Roadway\XSC\U5804B_rdy_xpl_Ldgn
10/26/2017

0 5 10	PROJ. REFERENCE NO.	SHEET NO.
	44376.3.2	X-7

NORTH CAROLINA PROFESSIONAL SEAL 037923 ENGINEER FRANK D. MASTERSON, III
DocuSigned by: 10/26/2017
80FB2B0B6CFF1412

102 + 50.00

HEADWALL ELEVATION AT OUTLET: 643.17
PROPOSED HEADWALL FOR FUTURE TUNNEL SEE STRUCUTRE PLANS FOR HEADWALL AND TUNNEL PLANS BY MORRISON ENGINEERING THIS SET
TRAIL CENTERLINE ELEVATION AT OUTLET: 630.27
TUNNEL INVERT ELEVATION AT OUTLET: 628.17
43.54↓
15" SWP FL 626.89
EL643.80 OF: 639.22
VAR.
2.00%
EL648.53 OF: 30.50 EL647.99
EL648.63
648.24
EL647.99 EL648.63 OF: 30.50
HEADWALL ELEVATION AT INLET: 643.50
PROPOSED HEADWALL FOR FUTURE TUNNEL SEE STRUCUTRE PLANS FOR HEADWALL AND TUNNEL PLANS BY MORRISON ENGINEERING THIS SET
TRAIL CENTERLINE ELEVATION AT INLET: 630.60
TUNNEL INVERT ELEVATION AT INLET: 628.50
2↓

102 + 00.00

EL634.59 OF: 150.50
15" RCP FL 634.73
CENTERLINE FUTURE TRAIL
2.00%
EL647.00
646.52
EL646.36 EL646.46 OF: 30.50
2↓

101 + 50.00

EL635.09 OF: 134.96
EL637.41 OF: 118.37
CENTERLINE FUTURE TRAIL
EL639.25 OF: 79.41
4.57' ↓
7↓
6.67↓
15" RCP FL 637.26
2.00%
EL645.72
644.99
2↓

-L- TRADE STREET (SR3448)

K:\CHL_PRJ\NO\36319_U-5804B_Trade\Roadway\XSCV\U5804B_rdy_xpl_Udgn
10/26/2017

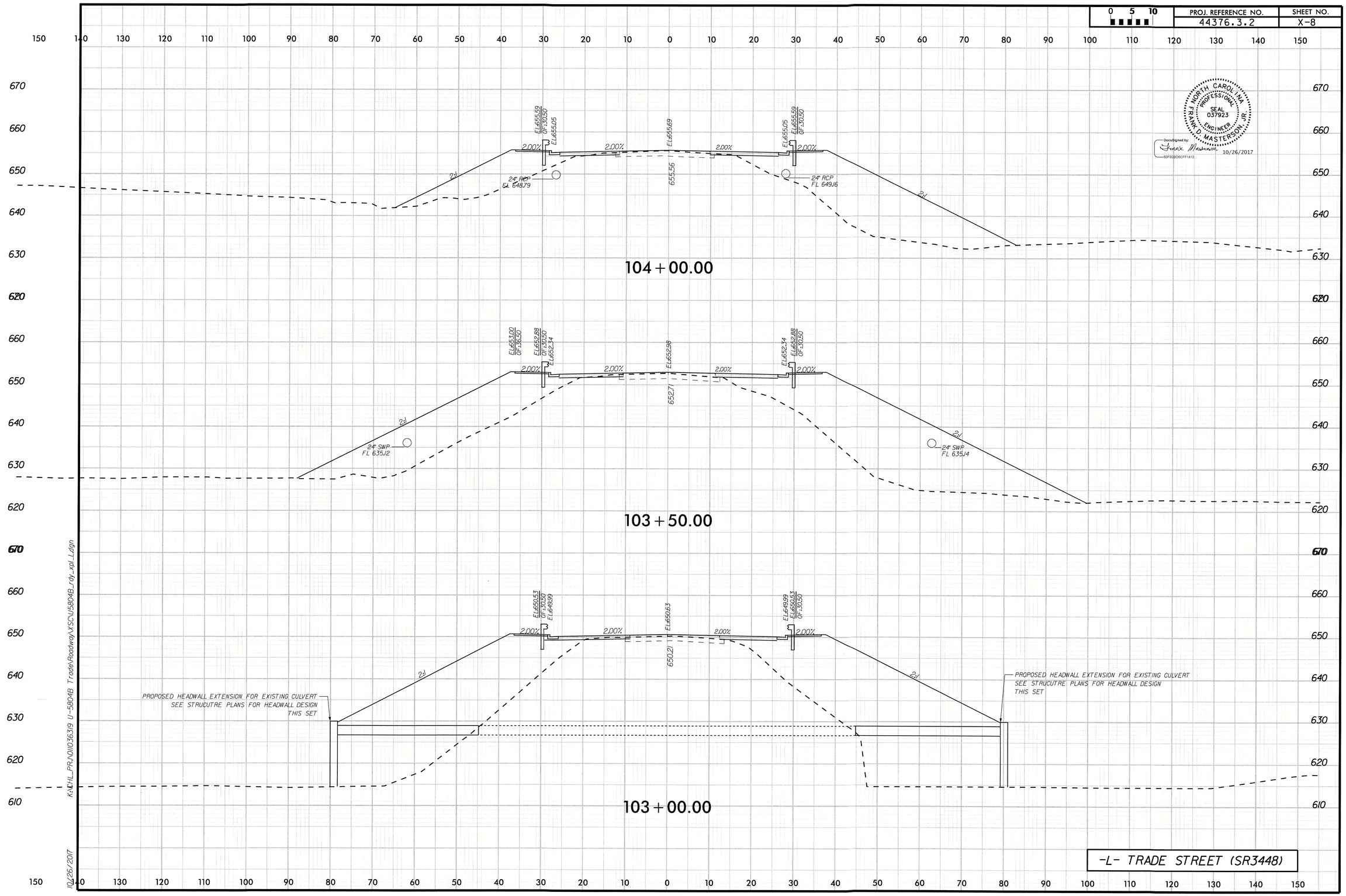

PROJ. REFERENCE NO.
44376.3.2
SHEET NO.
X-8
104+00.00
103+50.00
103+00.00
EL:655.59
OF:30.50
EL:655.05
EL:655.69
655.56
24" RCP
FL 648.79
24" RCP
FL 649.16
EL:653.00
OF:36.50
EL:652.88
OF:30.50
EL:652.34
EL:652.98
652.71
24" SWP
FL 635.12
24" SWP
FL 635.14
EL:650.53
OF:30.50
EL:649.99
EL:650.63
650.21
PROPOSED HEADWALL EXTENSION FOR EXISTING CULVERT
SEE STRUCUTRE PLANS FOR HEADWALL DESIGN
THIS SET
2.00%
2:1
-L- TRADE STREET (SR3448)
NORTH CAROLINA PROFESSIONAL SEAL 037923 ENGINEER FRANK D. MASTERSON, JR.
10/26/2017
K:\CHL_PRJ\011036319 U-5804B Trade\Roadway\XSC\U5804B_rdy_xpl_L.dgn
10/26/2017

0 5 10	PROJ. REFERENCE NO.	SHEET NO.
	44376.3.2	X-9

22

NORTH CAROLINA PROFESSIONAL SEAL 037923 ENGINEER FRANK D. MASTERSON, JR.

DocuSigned by: Frank Masterson 10/26/2017
60F82B06CFF1412...

106+00.00

EL665.33 OF:31.69 EL664.79

EL665.45

EL664.79 EL665.33 OF:31.95 EL665.46 OF:31.95

2:1 2.00% 2.00% 2.00% 2.00% 2:1

24" RCP FL 659.40

24" RCP FL 657.83

105+50.00

EL663.36 OF:30.69 EL662.82

EL663.46

EL662.81 EL663.35 OF:31.17

2:1 2.00% 2.00% 2.00% 2.00%

24" RCP FL 657.82

663.36

24" RCP

105+00.00

EL661.07 OF:30.50 EL660.53

EL661.17

EL660.53 EL661.07 OF:30.50

2:1 2.00% 2.00% 2.00% 2.00% 2:1

24" RCP FL 654.78

661.05

24" RCP FL 653.58

104+50.00

EL658.60 OF:36.50

EL658.48 OF:30.50 EL657.94

EL658.58

EL657.94 EL658.48 OF:30.50

2:1 2.00% 2.00% 2.00% 2.00% 2:1

24" RCP FL 651.78

657.43

24" RCP FL 651.37

-L- TRADE STREET (SR3448)

150 140 130 120 110 100 90 80 70 60 50 40 30 20 10 0 10 20 30 40 50 60 70 80 90 100 110 120 130 140 150

690 680 670 660 650 640 630

K:\CHL_PRJ\DII\036399 U-5804B Trade\Roadway\XSC\U5804B_rdy_xpl_Hgn

10/26/2017

0 5 10	PROJ. REFERENCE NO.	SHEET NO.
	44376.3.2	X-10

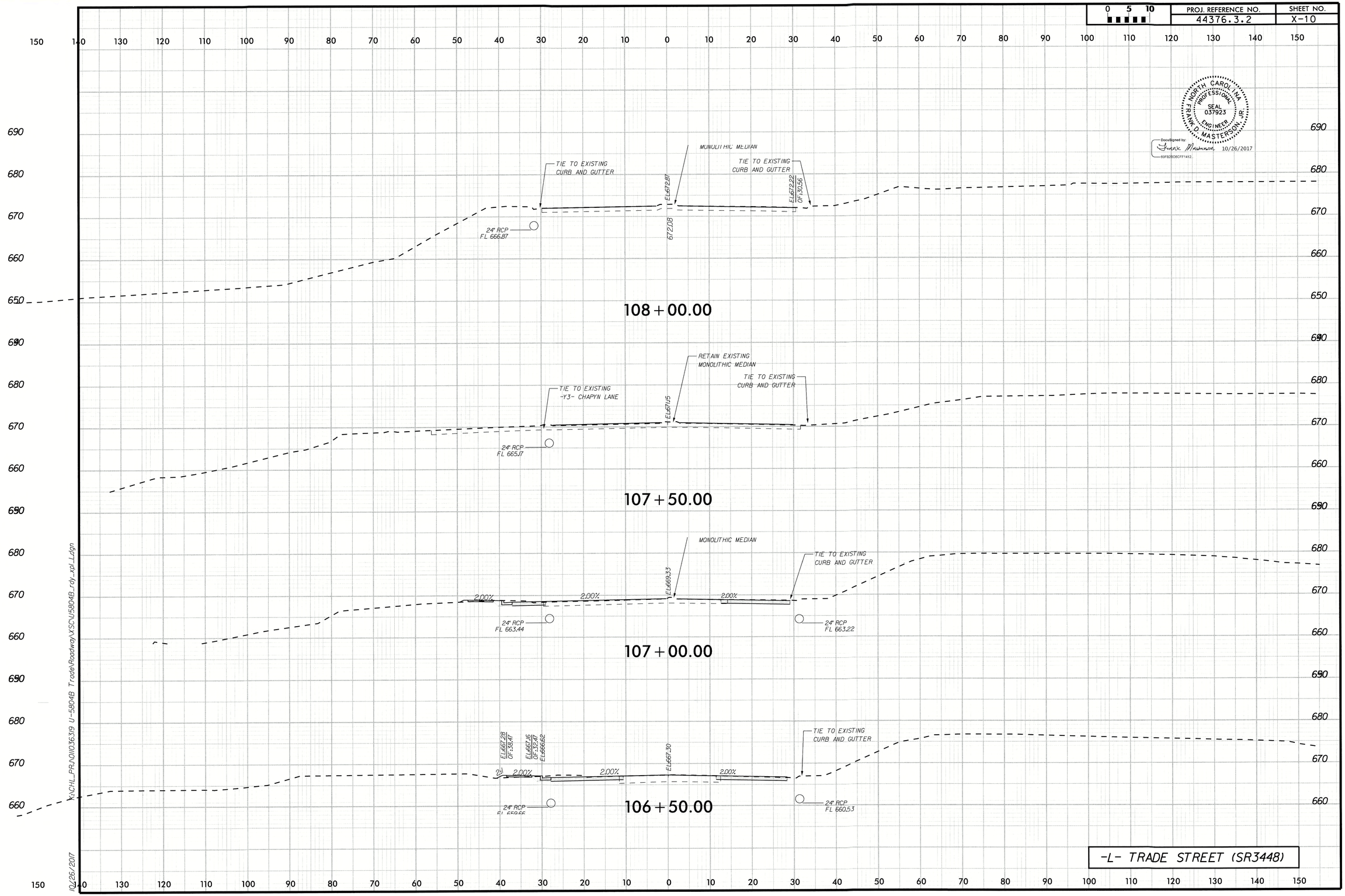

NORTH CAROLINA PROFESSIONAL SEAL 037923 ENGINEER FRANK D. MASTERSON, JR

DocuSigned by: Frank Masterson 10/26/2017
80F82B0BCFF1412...

X:\CHL_PRJ\DII\036319 U-5804B Trade\Roadway\XSCV5804B_rdy_xpl_Ldgn

10/26/2017

0 5 10	PROJ. REFERENCE NO.	SHEET NO.
	44376.3.2	X-11

NORTH CAROLINA PROFESSIONAL SEAL 037923 ENGINEER FRANK D. MASTERSON, JR.

DocuSigned by: Frank Masterson 10/26/2017
60F82B06CFF1412

109+15.00

109+00.00

108+50.00

TIE TO EXISTING CURB AND GUTTER

RETAIN EXISTING MONOLITHIC MEDIAN

TIE TO EXISTING CURB AND GUTTER

675.31

EL=67.45

673.51

EL=67.31
OF=31.50

EL=67.43
OF=35.80

-L- TRADE STREET (SR3448)

690
680
670
660
650

150 140 130 120 110 100 90 80 70 60 50 40 30 20 10 0 10 20 30 40 50 60 70 80 90 100 110 120 130 140 150

K:\CHL_PROJ\0103639 U-5804B Trade\Roadway\XSCU5804B_rdy_Mpl_L.dgn

10/26/2017

T.I.P. NO.	SHEET NO.
U-5804B	UC-1

DOCUMENT NOT CONSIDERED FINAL UNLESS ALL SIGNATURES COMPLETED

SENSITIVE MATERIALS DO NOT DUPLICATE

STATE OF NORTH CAROLINA
DIVISION OF HIGHWAYS

UTILITY CONSTRUCTION PLANS
MECKLENBURG COUNTY

LOCATION: SOUTH TRADE STREET (SR 3448) FROM MARQUE PLACE TO CHAPHYN LANE

TYPE OF WORK: WATER AND SEWER LINE RELOCATIONS

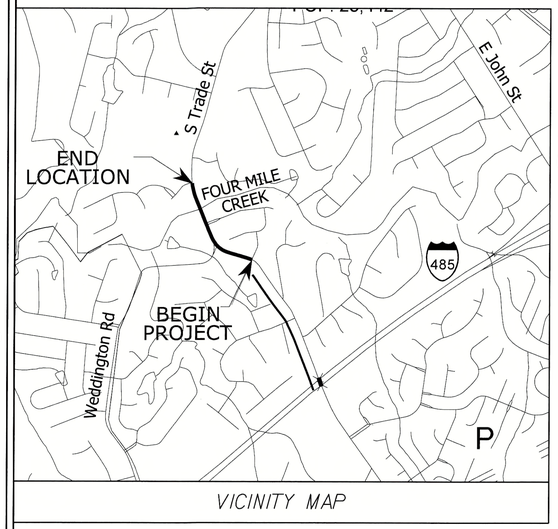

VICINITY MAP

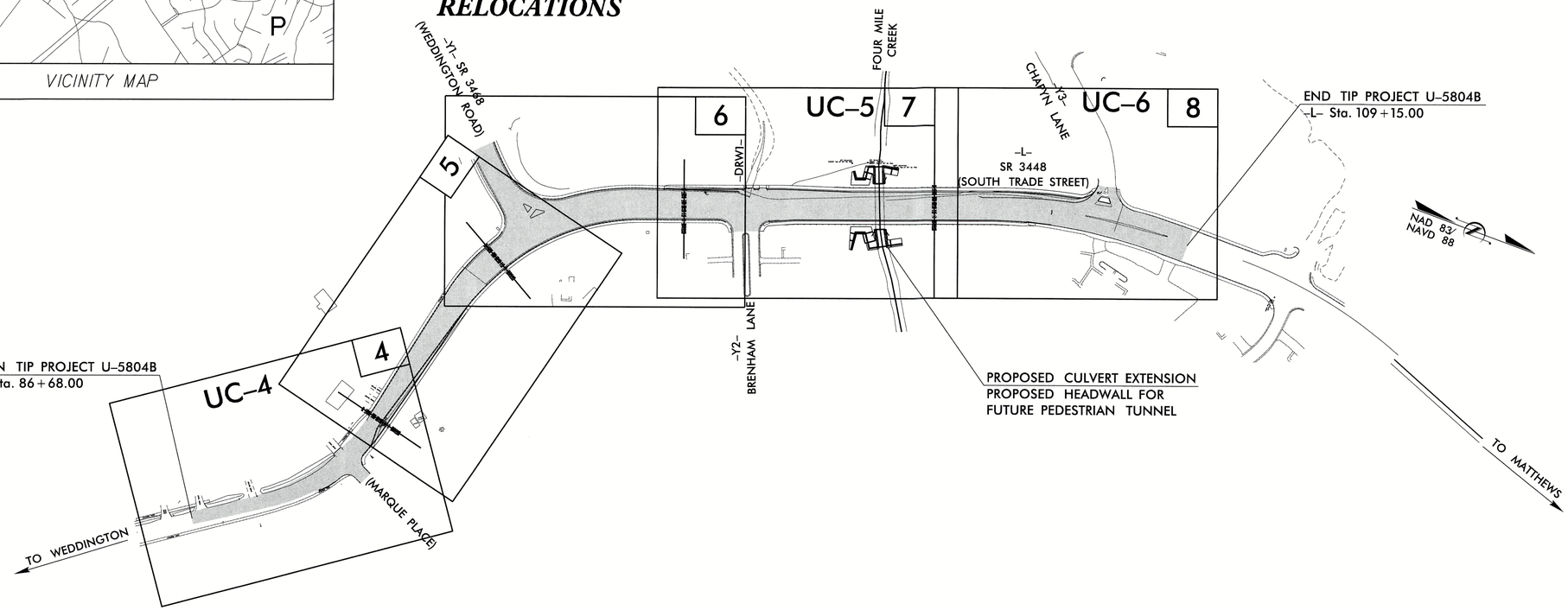

TIP PROJECT: U-5804B

GRAPHIC SCALES

20 10 0 20 40 PLANS

20 10 0 20 40 PROFILE (HORIZONTAL)

10 5 0 10 20 PROFILE (VERTICAL)

INDEX OF SHEETS

SHEET NO.	DESCRIPTION
UC-1	TITLE SHEET
UC-2	UTILITY SYMBOLOGY
UC-3	NOTES
UC-3A THRU UC-3C	DETAILS
UC-4 THRU UC-6	UTILITY CONSTRUCTION SHEETS
UC-7 THRU UC-10	PROFILE SHEETS

WATER AND SEWER OWNERS ON PROJECT

(A) WATER - CHARLOTTE WATER
(B) SEWER - CHARLOTTE WATER

PREPARED IN THE OFFICE OF:

HINDE ENGINEERING
License No. C-2639
401 Harrison Oaks Blvd., Suite 145 Cary, NC 27513
Ph. (919) 653-0001

Clint L. Stevens, P.E.	UTILITIES PROJECT MANAGER
Corey D. Bousquet, P.E.	UTILITIES PROJECT ENGINEER
Corey D. Bousquet, P.E.	UTILITIES PROJECT DESIGNER

SEAL

Docusigned by:
Clint L. Stevens
9E6F32D777EB42D
9/7/2017

07-SEP-2017 09:56
S:\Server Files\PROJECTS\2017\A2017602.00_KHA_U-5804B\Design\Utilities\Engineering\UC\Proj\U5804B_ut_tsh_UC1_psh.dgn
$$$$USERNAME$$$$

STATE OF NORTH CAROLINA
DIVISION OF HIGHWAYS

HINDE ENGINEERING
License No. C-2639
401 Harrison Oaks Blvd., Suite 145 Cary, NC 27513

PROJECT REFERENCE NO.	SHEET NO.
U-5804B	UC-2

SENSITIVE MATERIALS
DO NOT DUPLICATE

UTILITIES PLAN SHEET SYMBOLS

PROPOSED WATER SYMBOLS

- Water Line (Sized as Shown) — 12" WL
- 11¼ Degree Bend
- 22½ Degree Bend
- 45 Degree Bend
- 90 Degree Bend
- Plug
- Tee
- Cross
- Reducer
- Gate Valve — GV
- Butterfly Valve — BV
- Tapping Valve — TGV
- Line Stop — LS
- Line Stop with Bypass — LS/BP
- Blow Off — BO
- Fire Hydrant — PFH
- Relocate Fire Hydrant — RFH
- Remove Fire Hydrant — REM FH
- Water Meter — PWM
- Relocate Water Meter — RWM
- Remove Water Meter — REM WM
- Water Pump Station — PS(W)
- RPZ Backflow Preventer — PRPZ
- DCV Backflow Preventer — PBFP
- Relocate RPZ Backflow Preventer — RRPZ
- Relocate DCV Backflow Preventer — RBFP

PROPOSED SEWER SYMBOLS

- Gravity Sewer Line (Sized as Shown) — 12" SS
- Force Main Sewer Line (Sized as Shown) — 12" FSS
- Manhole (Sized per Note)
- Sewer Pump Station — PS(SS)

PROPOSED MISCELLANOUS UTILITIES SYMBOLS

- Power Pole
- Telephone Pole
- Joint Use Pole
- Telephone Pedestal — TEL PED
- Utility Line by Others (Type as Shown) — PROP O/H POW LINES
- Trenchless Installation — 12" TL INSTALL
- Encasement by Open Cut — 24" ENCAS BY OC
- Encasement — 24" ENCASEMENT
- Thrust Block
- Air Release Valve — AR
- Utility Vault — UV
- Concrete Pier — CP
- Steel Pier — SP
- Plan Note — NOTE
- Pay Item Note — PAY ITEM

EXISTING UTILITIES SYMBOLS

- Power Pole
- Telephone Pole
- Joint Use Pole
- Utility Pole
- Utility Pole with Base
- H-Frame Pole
- Power Transmission Line Tower
- Water Manhole
- Power Manhole
- Telephone Manhole
- Sanitary Sewer Manhole
- Hand Hole for Cable
- Power Transformer
- Telephone Pedestal
- CATV Pedestal
- Gas Valve
- Gas Meter
- Located Miscellaneous Utility Object
- Abandoned According to Utility Records — AATUR
- End of Information — E.O.I.
- *Underground Power Line — P
- *Underground Telephone Cable — T
- *Underground Telephone Conduit — TC
- *Underground Fiber Optics Telephone Cable — T FO
- *Underground TV Cable — TV
- *Underground Fiber Optics TV Cable — TV FO
- *Underground Gas Pipeline — G
- Aboveground Gas Pipeline — A/G Gas
- *Underground Water Line — W
- Aboveground Water Line — A/G Water
- *Underground Gravity Sanitary Sewer Line — SS
- Aboveground Gravity Sanitary Sewer Line — A/G Sanitary Sewer
- *Underground SS Forced Main Line — FSS
- Underground Unknown Utility Line — ?UTL
- SUE Test Hole
- Water Meter
- Water Valve
- Fire Hydrant
- Sanitary Sewer Cleanout

*For Existing Utilities

- Utility Line Drawn from Record (Type as Shown) — W
- Designated Utility Line (Type as Shown) — W

REV: 2/1/2012

07-SEP-2017 08:52
602.00_KHA_U-5804B\Design\Utilities\Engineering\UC\Proj\U5804B_ut_sym_UC02_psh.dgn
$$$$USERNAME$$$$

SENSITIVE MATERIALS
DO NOT DUPLICATE

HINDE ENGINEERING
License No. C-2639
7520 E. Independence Blvd., Suite 230 Charlotte, NC 28227

DOCUMENT NOT CONSIDERED FINAL UNLESS ALL SIGNATURES COMPLETED

PROJECT REFERENCE NO.	SHEET NO.
U-5804B	UC-2A
DESIGNED BY: CLS	
DRAWN BY: JNA	
CHECKED BY: CLS	
APPROVED BY: CLS	
REVISED:	

NORTH CAROLINA DEPARTMENT OF TRANSPORTATION
UTILITIES ENGINEERING SEC.
PHONE:(919)707-6690
FAX:(919)250-4151

NORTH CAROLINA PROFESSIONAL SEAL 040370 ENGINEER CLINT L. STEVENS

UTILITY CONSTRUCTION PLANS ONLY

UTILITY CONSTRUCTION

APPLICATION FOR NON-DISCHARGE PERMIT
GRAVITY SEWER MAIN EXTENSION
CHARLOTTE WATER

PROJECT NAME NCDOT PROJECT U5804B CREEK BASIN FOUR MILE CREEK
SOUTH TRADE STREET (SR 3448) FROM

CLTWater PROJECT NO.: 7030600017-17-559

PROJECT TYPE: ☐ NEW CONSTRUCTION ☒ RELOCATION ☐ MODIFICATION OF PERMIT NO. _____
OTHER _____

VOLUME OF WASTEWATER GENERATED BY THIS PROJECT: N/A GALLONS PER DAY BASED ON 190 GAL/DAY/SINGLE FAMILY HOUSEHOLD X N/A HOUSEHOLDS OR

135 GAL/DAY/MULTI-FAMILY UNIT X N/A UNITS OR IS BASED ON :

WASTEWATER TREATMENT PLANT RECEIVING WASTEWATER:

☒ McALPINE CR. (NC0024970) ☐ IRWIN CR. (NC0024945) ☐ McDOWELL CR. (NC0036277)
☐ SUGAR CR. (NC0024937) ☐ MALLARD CR. (NC0030210)

NATURE OF WASTEWATER 80 % DOMESTIC _____ % INDUSTRIAL
20 % COMMERCIAL _____ % OTHER _____

ORIGIN OF WASTEWATER ☒ SUBDIVISION ☒ COMMERCIAL
☐ SCHOOL ☐ INDUSTRIAL
☒ APARTMENTS/CONDO'S ☐ OTHER _____

LIST ANY PARAMETER AND ITS CONCENTRATION THAT WILL BE GREATER THAN NORMAL DOMESTIC LEVELS:
NONE

IF WASTEWATER IS NON-DOMESTIC, DESCRIBE LEVEL OF PRETREATMENT:
N/A

IF A PRETREATMENT PERMIT IS REQUIRED, HAS ONE BEEN ISSUED? ☐ YES ☐ NO

HAS ENGINEER DETERMINED THAT DOWNSTREAM SEWERS ARE CAPABLE TO HANDLE THIS FLOW? ☒ YES ☐ NO
PERMIT NO. FOR SEWERS IMMEDIATELY DOWNSTREAM _____
PIPE DIAMETER OF SEWERS IMMEDIATELY DOWNSTREAM 16 AND 24 - INCH

HAS ENGINEER DETERMINED THAT NC DEM AND CLTWater MINIMUM DESIGN STANDARDS ARE MET BY THIS PROJECT? ☒ YES ☐ NO

COMPLETE NAME AND ADDRESS OF ENGINEERING DESIGN FIRM:
HINDE ENGINEERING, INC.
401 HARISON OAKS BLVD., SUITE 145
CARY, NORTH CAROLINA 27513

TELEPHONE 919 - 653 - 0001

PROFESSIONAL ENGINEER'S CERTIFICATION:
I, CLINT L. STEVENS, PE, ATTEST THAT THIS APPLICATION FOR PROP. 8" ,16" AND 24"DI SEWER TO SERVE NCDOT U-5804B S TRADE ST. WIDENING HAS BEEN REVIEWED BY ME AND IS ACCURATE AND COMPLETE TO THE BEST OF MY KNOWLEDGE. I FURTHER ATTEST THAT TO THE BEST OF MY KNOWLEDGE THE PROPOSED DESIGN HAS BEEN PREPARED IN ACCORDANCE WITH THE APPLICABLE REGULATIONS. ALTHOUGH CERTAIN PORTIONS OF THIS SUBMITTAL PACKAGE MAY HAVE BEEN DEVELOPED BY OTHER PROFESSIONALS, INCLUSION OF THESE MATERIALS UNDER MY SIGNATURE AND SEAL SIGNIFIES THAT I HAVE REVIEWED THIS MATERIAL AND HAVE JUDGED IT TO BE CONSISTENT WITH THE PROPOSED DESIGN.

NORTH CAROLINA PROFESSIONAL ENGINEER'S SEAL, SIGNATURE, AND DATE:

DocuSigned by:
Clint Stevens
0B6F22D777EB42D...

NORTH CAROLINA PROFESSIONAL SEAL 040370 ENGINEER CLINT L. STEVENS

9/7/2017

CLTWater PERMIT NO. _____ ISSUED _____

PLANT FLOW ALLOCATION RECORDED BY: _____

PERMIT APPROVED BY: _____
JOSEPH C WILSON, P.E., CHIEF ENGINEER

APPLICATION FOR PERMIT FOR WATER MAIN EXTENSION

PROJECT NAME: NCDOT PROJECT U5804B
SOUTH TRADE STREET (SR 3448) FROM
MARQUE PLACE TO CHAPHYN LANE

CLTWater PROJECT NO.: 7030600038-17-069

PROJECT DESCRIPTION: PROPOSED 652 L.F. OF 24" DI WATER MAIN WITH IT'S ASSOCIATED FITTINGS CROSSING SOUTH TRADE STREET (SR 3448) FROM MARQUE PLACE TO CHAPHYN LANE

DESIGNED BY: FIRM: HINDE ENGINEERING, INC.
ENGINEER: CLINT L. STEVENS, PE
ADDRESS: 401 HARISON OAKS BLVD., SUITE 145
CARY, NORTH CAROLINA 27513
PHONE: (919) 653-0001

THIS APPLICATION IS MADE UNDER AND IN FULL ACCORD WITH THE PROVISIONS OF CHAPTER 130A-317 OF THE NORTH CAROLINA GENERAL STATUTES, AND SUCH OTHER STATUTES AS RELATED TO PUBLIC WATER SYSTEMS. CLTWater HAS BEEN GRANTED AUTHORITY TO ISSUE PERMITS FOR EXTENSION OF WATER MAINS PURSUANT TO 15A NCAC 18C.1801. THE APPLICANT AGREES THAT NO SIGNIFICANT CHANGE OR DEVIATION FROM THE PLANS AND SPECIFICATIONS APPROVED BY CLTWater WILL BE MADE WITHOUT THE WRITTEN CONSENT AND APPROVAL OF CLTWater OR ITS AUTHORIZED REPRESENTATIVE. A PROFESSIONAL ENGINEER LICENSED TO PRACTICE IN THE STATE OF NORTH CAROLINA SHALL SUBMIT A STATEMENT REFLECTING THAT ADEQUATE OBSERVATIONS DURING AND UPON COMPLETION OF CONSTRUCTION INDICATES THAT CONSTRUCTION WAS COMPLETED IN ACCORDANCE WITH APPROVED PLANS AND SPECIFICATIONS.

PERMIT NO. _____

APPROVED: _____ DATE _____

JOSEPH C WILSON, PE, CHIEF ENGINEER
CHARLOTTE WATER
5100 BROOKSHIRE BLVD.
CHARLOTTE, NORTH CAROLINA 28216

07-SEP-2017 14:58
$$$$USERNAME$$$$
C:\Server_Files\PROJECTS\2017\A2017602.00_KHA_U-5804B\Design\Utilities\Engineering\UC\Proj\U5804B_ut_permit_UC02A_psh.dgn

UTILITY CONSTRUCTION

HINDE ENGINEERING
License No. C-2839
7520 E. Independence Blvd., Suite 230 Charlotte, NC 28227

DOCUMENT NOT CONSIDERED FINAL UNLESS ALL SIGNATURES COMPLETED

PROJECT REFERENCE NO.	SHEET NO.
U-5804B	UC-3
DESIGNED BY: CDB	
DRAWN BY: CDB	
CHECKED BY: CLS	
APPROVED BY: CLS	
REVISED:	

NORTH CAROLINA DEPARTMENT OF TRANSPORTATION
UTILITIES ENGINEERING SEC.
PHONE:(919)707-6690
FAX:(919)250-4151

Document is signed by Clint L. Stevens
NORTH CAROLINA PROFESSIONAL ENGINEER SEAL 040370 CLINT L. STEVENS
926F42D777EB42D...
9/7/2017

UTILITY CONSTRUCTION PLANS ONLY

UTILITY CONSTRUCTION

GENERAL NOTES:

1. THE PROPOSED UTILITY CONSTRUCTION SHALL MEET THE APPLICABLE REQUIREMENTS OF THE NC DEPARTMENT OF TRANSPORTATION'S "STANDARD SPECIFICATIONS FOR ROADS AND STRUCTURES" DATED JANUARY 2012.

2. THE EXISTING WATER AND SEWER FACILITIES BELONG TO CHARLOTTE WATER.

3. ALL WATER LINES TO BE INSTALLED WITHIN COMPLIANCE OF THE RULES AND REGULATIONS OF THE NORTH CAROLINA DEPARTMENT OF ENVIRONMENTAL QUALITY, DIVISION OF WATER RESOURCES, PUBLIC WATER SUPPLY SECTION. ALL SEWER LINES TO BE INSTALLED WITHIN COMPLIANCE OF THE RULES AND REGULATIONS OF THE NORTH CAROLINA DEPARTMENT OF ENVIRONMENT QUALITY, DIVISION OF WATER RESOURCES, WATER QUALITY SECTION. PERFORM ALL WORK IN ACCORDANCE WITH THE APPLICABLE PLUMBING CODES.

4. THE UTILITY OWNER OWNS THE EXISTING UTILITY FACILITIES AND WILL OWN THE NEW UTILITY FACILITIES AFTER ACCEPTANCE BY THE DEPARTMENT. THE DEPARTMENT OWNS THE CONSTRUCTION CONTRACT AND HAS ADMINISTRATIVE AUTHORITY. COMMUNICATIONS AND DECISIONS BETWEEN THE CONTRACTOR AND UTILITY OWNER ARE NOT BINDING UPON THE DEPARTMENT OR THIS CONTRACT UNLESS AUTHORIZED BY THE ENGINEER. AGREEMENTS BETWEEN THE UTILITY OWNER AND CONTRACTOR FOR THE WORK THAT IS NOT PART OF THIS CONTRACT OR IS SECONDARY TO THIS CONTRACT ARE ALLOWED, BUT ARE NOT BINDING UPON THE DEPARTMENT.

5. PROVIDE ACCESS FOR THE DEPARTMENT PERSONNEL AND THE OWNER'S REPRESENTATIVES TO ALL PHASES OF CONSTRUCTION. NOTIFY DEPARTMENT PERSONNEL AND THE UTILITY OWNER TWO WEEKS PRIOR TO COMMENCEMENT OF ANY WORK AND ONE WEEK PRIOR TO SERVICE INTERRUPTION. KEEP UTILITY OWNERS' REPRESENTATIVES INFORMED OF WORK PROGRESS AND PROVIDE OPPORTUNITY FOR INSPECTION OF CONSTRUCTION AND TESTING.

6. THE PLANS DEPICT THE BEST AVAILABLE INFORMATION FOR THE LOCATION, SIZE, AND TYPE OF MATERIAL FOR ALL EXISTING UTILITIES. MAKE INVESTIGATIONS FOR DETERMINING THE EXACT LOCATION, SIZE, AND TYPE MATERIAL OF THE EXISTING FACILITIES AS NECESSARY FOR THE CONSTRUCTION OF THE PROPOSED UTILITIES AND FOR AVOIDING DAMAGE TO EXISTING FACILITIES. REPAIR ANY DAMAGE INCURRED TO EXISTING FACILITIES TO THE ORIGINAL OR BETTER CONDITION AT NO ADDITIONAL COST TO THE DEPARTMENT.

7. MAKE FINAL CONNECTIONS OF THE NEW WORK TO THE EXISTING SYSTEM WHERE INDICATED ON THE PLANS, AS REQUIRED TO FIT THE ACTUAL CONDITIONS, OR AS DIRECTED.

8. MAKE CONNECTIONS BETWEEN EXISTING AND PROPOSED UTILITIES AT TIMES MOST CONVENIENT TO THE PUBLIC, WITHOUT ENDANGERING THE UTILITY SERVICE, AND IN ACCORDANCE WITH THE UTILITY OWNER'S REQUIREMENTS. MAKE CONNECTIONS ON WEEKENDS, AT NIGHT, AND ON HOLIDAYS IF NECESSARY.

9. ALL UTILITY MATERIALS SHALL BE APPROVED PRIOR TO DELIVERY TO THE PROJECT. SEE 1500-7, " SUBMITTALS AND RECORDS" IN SECTION 1500 OF THE STANDARD SPECIFICATIONS.

LIST OF STANDARD DRAWINGS

1515.02 FIRE HYDRANT

PROJECT SPECIFIC NOTES:

1. ALL 12-INCH AND SMALLER DIAMETER PIPE SHALL BE DUCTILE IRON RESTRAINED JOINT PRESSURE CLASS 350, UNLESS OTHERWISE NOTED ON THE UTILITY CONSTRUCTION PLANS.

2. ALL 16-INCH AND LARGER DIAMETER PIPE SHALL BE DUCTILE IRON RESTRAINED JOINT PRESSURE CLASS 250, UNLESS OTHERWISE NOTED ON THE UTILITY CONSTRUCTION PLANS.

3. DUCTILE IRON RESTRAINED JOINT PIPE SHALL BE USED IN LIEU OF THRUST BLOCKING ON PROPOSED WATER LINE RELOCATIONS.

4. WALL BLOCKING SHALL BE USED ON EXISTING WATER LINES AT THE PROPOSED RELOCATION TIE-IN POINTS.

5. CONTRACTOR SHALL CONNECT ALL WATER LINES AND SERVICE CONNECTIONS USING NECESSARY FITTINGS.

6. THE CHARLOTTE WATER (CLTWATER) STANDARD DETAILS LOCATED ON THEIR WEBSITE AT: http://charlottenc.gov/Water/Pages/DesignManual.aspx SHALL SUPERCEDE ANY CLTWATER DETAILS SHOWN IN THIS PLAN SET.

7. CONTRACTOR'S ATTENTION IS DIRECTED TO SECTIONS 102, 107, AND 1550 OF THE STANDARD SPECIFICATIONS CONCERNING TRENCHLESS INSTALLATION. IT IS CONTRACTOR'S RESPONSIBILITY TO HAVE BORE DESIGNED AND SEALED BY A LICENSED NORTH CAROLINA PROFESSIONAL ENGINEER. NO DAMAGE IS ALLOWED TO RIVER, WETLANDS, OR BUFFER ZONES.

8. CONTRACTOR IS REQUIRED TO CONTACT BILL DEAL, PE, OF CLTWATER, AT (980)722-0786 AT LEAST 2 WEEKS PRIOR TO ANY WATER AND SEWER CONSTRUCTION.

07-SEP-2017 08:35
C:\Projects\PROJECTS\2017\N2017602.00_KHA_U-5804B\Design\Utilities\Engineering\UC\Proj\U5804b_ut_notes_UC03.psh.dgn
$$$$USERNAME$$$$

NOT TO SCALE

CLTWATER STANDARD DETAIL
PROJECT TYPICAL DETAILS

HINDE ENGINEERING
License No. C-2639
401 Harrison Oaks Blvd., Suite 145 Cary, NC 27513

DOCUMENT NOT CONSIDERED FINAL UNLESS ALL SIGNATURES COMPLETED

PROJECT REFERENCE NO.	SHEET NO.
U-5804B	UC-3A
DESIGNED BY: CDB	
DRAWN BY: CDB	
CHECKED BY: CLS	
APPROVED BY: CLS	
REVISED:	

NORTH CAROLINA DEPARTMENT OF TRANSPORTATION
UTILITIES ENGINEERING SEC.
PHONE:(919)707-6690
FAX:(919)250-4151

NORTH CAROLINA PROFESSIONAL ENGINEER SEAL 040370 CLINT L. STEVENS
Docusigned by: Clint L Stevens 9D6E32D777EB420...
9/7/2017

UTILITY CONSTRUCTION PLANS ONLY

UTILITY CONSTRUCTION

SENSITIVE MATERIALS
DO NOT DUPLICATE

TRENCH DETAIL

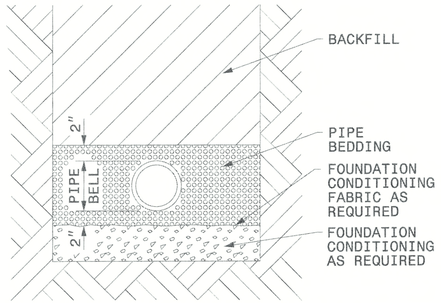

PLACE FOUNDATION CONDITIONING MATERIAL BELOW BEDDING IF REQUIRED, AS DIRECTED BY ENGINEER. PIPE BEDDED IN SELECT MATERIAL, CLASS II (TYPE 1) OR CLASS III. TRENCH BACKFILLED IN LOOSE 6" LAYERS COMPACTED TO TOP OF TRENCH USING LOCAL EXCAVATED MATERIAL IF APPROVED BY THE ENGINEER, OR SELECT MATERIAL. ALL MATERIAL SHALL BE FREE OF ROCKS, FOREIGN MATERIAL, AND FROZEN EARTH. COMPACTION SHALL BE TO APPROXIMATELY 95% DENSITY IN ACCORDANCE WITH AASHTO T-99 AS MODIFIED BY THE DEPARTMENT OF TRANSPORTATION.

MAXIMUM TRENCH WIDTH AT TOP OF PIPE

NOMINAL PIPE SIZE (INCHES)	TRENCH WIDTH (INCHES)	NOMINAL PIPE SIZE (INCHES)	TRENCH WIDTH (INCHES)
4	28	20	44
6	30	24	48
8	32	30	54
10	34	36	60
12	36	42	66
14	38	48	72
16	40	54	78
18	42		

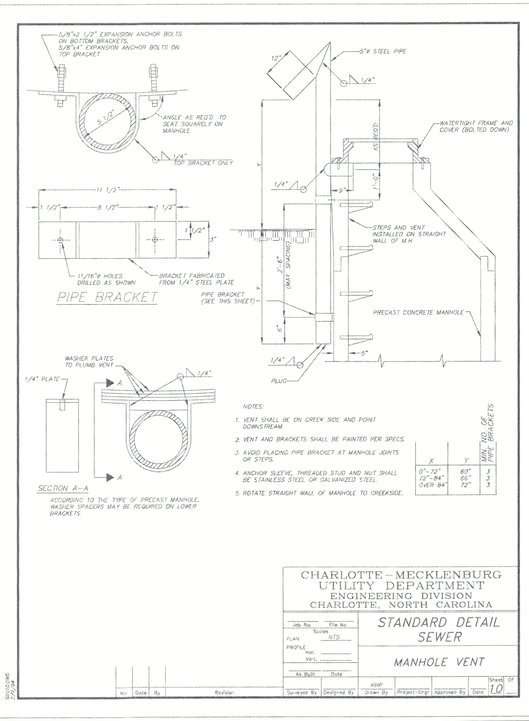

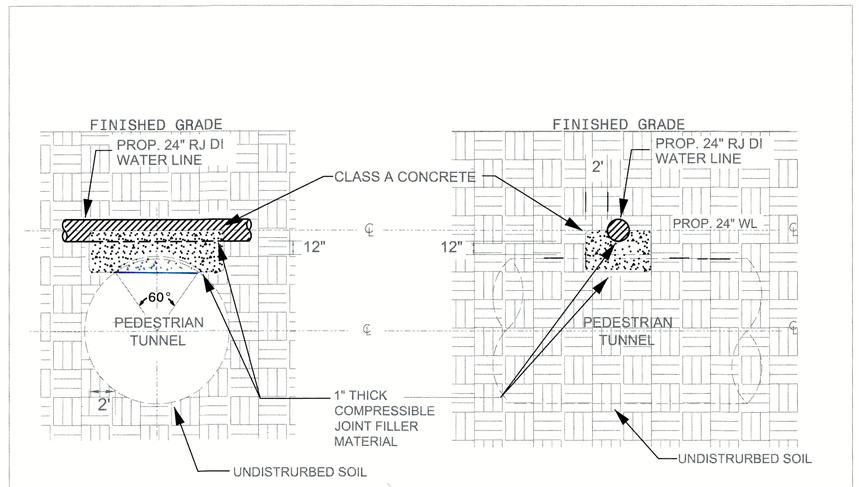

CONCRETE CRADLE FOR 24" WATER LINE OVER PEDESTRIAN TUNNEL DETAIL

07-SEP-2017 08:50
C:\Users\cstevens\Documents\PROJECTS\2017\A2017602.00_KHA_U-5804B\Design\Utilities\Engineering\UC\P-o_NU5804B_ut_dtl_UC3A_UC3C.psh.dgn
$$$$CERNAME $$$$

NOT TO SCALE

HINDE ENGINEERING
License No. C-2639
401 Harrison Oaks Blvd., Suite 145 Cary, NC 27513

DOCUMENT NOT CONSIDERED FINAL UNLESS ALL SIGNATURES COMPLETED

SENSITIVE MATERIALS DO NOT DUPLICATE

PROJECT REFERENCE NO.	SHEET NO.
U-5804B	UC-3B
DESIGNED BY: CDB	
DRAWN BY: CDB	
CHECKED BY: CLS	
APPROVED BY: CLS	
REVISED:	

NORTH CAROLINA DEPARTMENT OF TRANSPORTATION
UTILITIES ENGINEERING SEC.
PHONE:(919)707-6690
FAX:(919)250-4151

Documents not considered final unless all signatures completed
NORTH CAROLINA
JOHNSTON COUNTY
CLINT L. STEVENS
SEAL 040370
ENGINEER
Clint L. Stevens
9B6F32D777EB420...
9/7/2017

UTILITY CONSTRUCTION PLANS ONLY

UTILITY CONSTRUCTION

CLTWATER STANDARD DETAILS

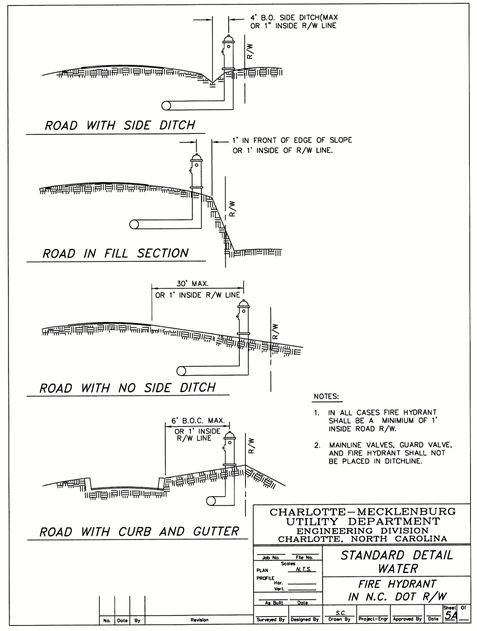

NOTES:
1. IN ALL CASES FIRE HYDRANT SHALL BE A MINIMUM OF 1' INSIDE ROAD R/W.
2. MAINLINE VALVES, GUARD VALVE, AND FIRE HYDRANT SHALL NOT BE PLACED IN DITCHLINE.

CHARLOTTE–MECKLENBURG UTILITY DEPARTMENT
ENGINEERING DIVISION
CHARLOTTE, NORTH CAROLINA

STANDARD DETAIL
WATER
FIRE HYDRANT IN N.C. DOT R/W

Job No. | File No. | Scale: N.T.S. | PLAN | PROFILE | Hor. | Ver. | As Built | Date
Surveyed By | Designed By | S.C. Drawn By | Project-Engr | Approved By | Date | Sheet 5A Of

No. | Date | By | Revision

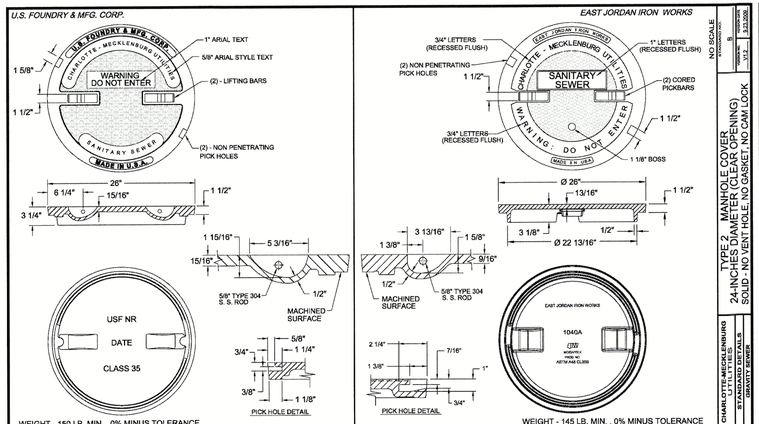

NOTES:
LOAD RATING - HEAVY DUTY
MATERIAL - ASTM A48 - CLASS 35 GRAY IRON
COATING - UNDIPPED

USE WITH TYPE A, B, OR C FRAME
COVER SHALL CONFORM TO DIMENSION AND WEIGHT REQUIREMENTS.
COVER SHALL NOT BE OUT OF ROUND.

NO SCALE | DRAWING B | 3.3.2 | 3.3.3.

PROP. 8′ DIA. MANHOLE DETAIL, SEE SHEET UC-5

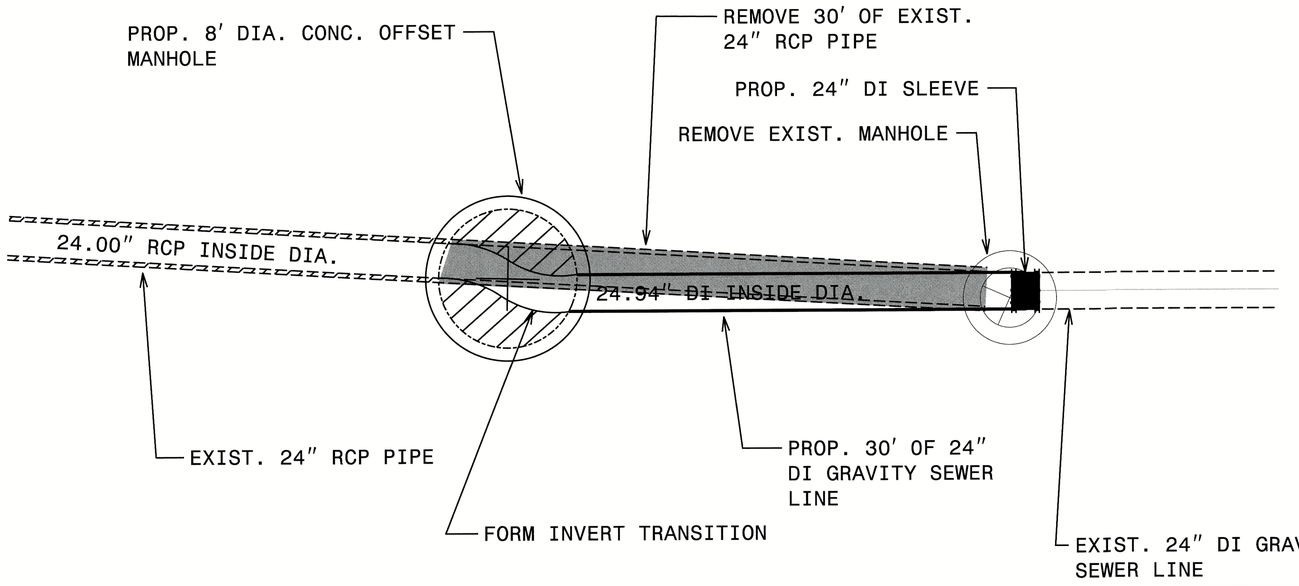

HINDE ENGINEERING
License No. C-2639
401 Harrison Oaks Blvd., Suite 146 Cary, NC 27513

DOCUMENT NOT CONSIDERED FINAL UNLESS ALL SIGNATURES COMPLETED

NOT TO SCALE

PROJECT REFERENCE NO.	SHEET NO.
U-5804B	UC-3C
DESIGNED BY: CDB	
DRAWN BY: CDB	
CHECKED BY: CLS	
APPROVED BY: CLS	
REVISED:	

NORTH CAROLINA DEPARTMENT OF TRANSPORTATION
UTILITIES ENGINEERING SEC.
PHONE:(919)707-6690
FAX:(919)250-4151

DocuSigned by: Clint L. Stevens 9B6F32D777EB42D...
NORTH CAROLINA PROFESSIONAL ENGINEER SEAL 040370 CLINT L. STEVENS
9/7/2017

UTILITY CONSTRUCTION PLANS ONLY

UTILITY CONSTRUCTION

SENSITIVE MATERIALS DO NOT DUPLICATE

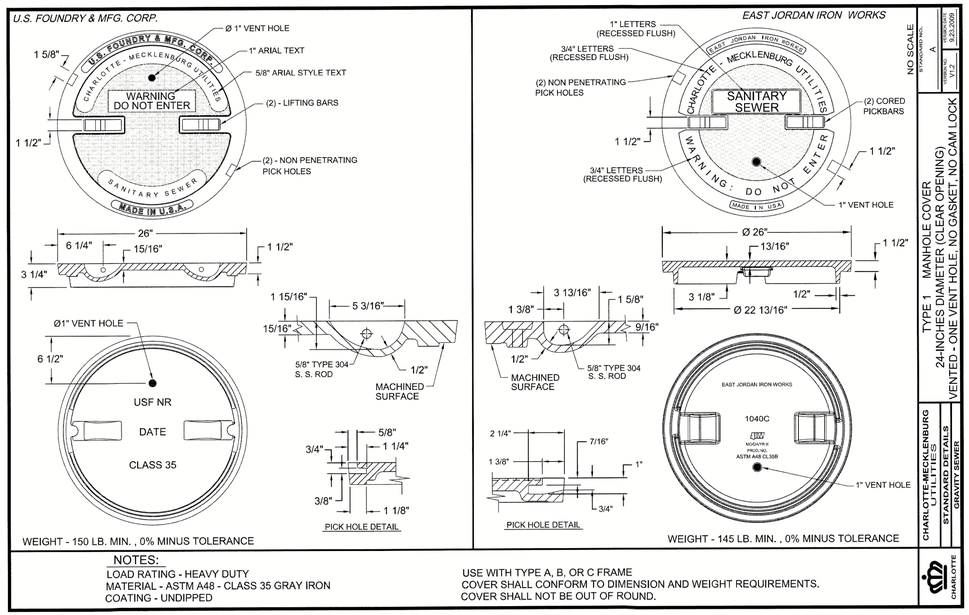

NO SCALE

STANDARD NO.	SHEET NO.
A	1 OF 1
10'2"	12'2"

TYPE 1 MANHOLE COVER
24-INCH DIAMETER CLEAR OPENING)
VENTED - ONE VENT HOLE, NO GASKET, NO CAM LOCK

CHARLOTTE-MECKLENBURG UTILITIES
STANDARD DETAILS
GRAVITY SEWER

CHARLOTTE

NOTES:

LOAD RATING - HEAVY DUTY
MATERIAL - ASTM A48 - CLASS 35 GRAY IRON
COATING - UNDIPPED

USE WITH TYPE A, B, OR C FRAME
COVER SHALL CONFORM TO DIMENSION AND WEIGHT REQUIREMENTS.
COVER SHALL NOT BE OUT OF ROUND.

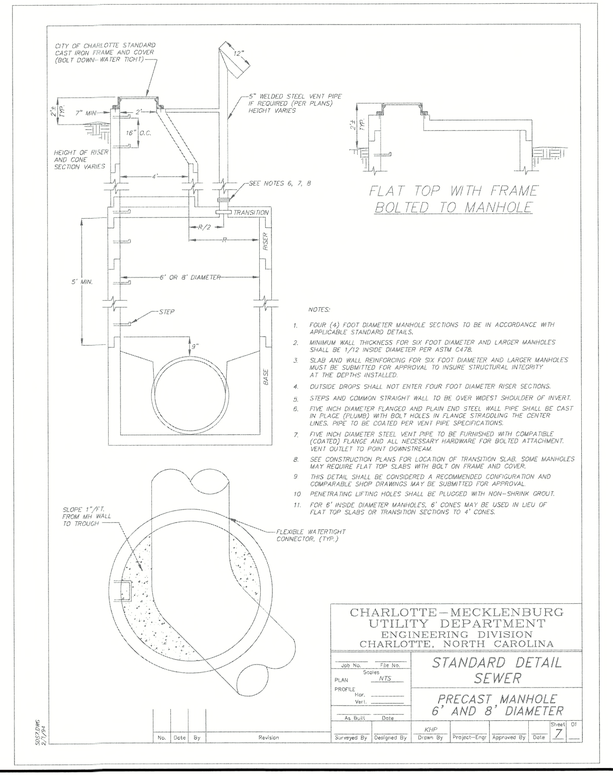

NOTES:

1. FOUR (4) FOOT DIAMETER MANHOLE SECTIONS TO BE IN ACCORDANCE WITH APPLICABLE STANDARD DETAILS.
2. MINIMUM WALL THICKNESS FOR SIX FOOT DIAMETER AND LARGER MANHOLES SHALL BE 1/12 INSIDE DIAMETER PER ASTM C478.
3. SLAB AND WALL REINFORCING FOR SIX FOOT DIAMETER AND LARGER MANHOLES MUST BE SUBMITTED FOR APPROVAL TO INSURE STRUCTURAL INTEGRITY AT THE DEPTHS INSTALLED.
4. OUTSIDE DROPS SHALL NOT ENTER FOUR FOOT DIAMETER RISER SECTIONS.
5. STEPS AND COMMON STRAIGHT WALL TO BE OVER WIDEST SHOULDER OF INVERT.
6. FIVE INCH DIAMETER FLANGED AND PLAIN END STEEL WALL PIPE SHALL BE CAST IN PLACE (PLUMB) WITH BOLT HOLES IN FLANGE STRADDLING THE CENTER LINES. PIPE TO BE COATED PER VENT PIPE SPECIFICATIONS.
7. FIVE INCH DIAMETER STEEL VENT PIPE TO BE FURNISHED WITH COMPATIBLE (COATED) FLANGE AND ALL NECESSARY HARDWARE FOR BOLTED ATTACHMENT. VENT OUTLET TO POINT DOWNSTREAM.
8. SEE CONSTRUCTION PLANS FOR LOCATION OF TRANSITION SLAB. SOME MANHOLES MAY REQUIRE FLAT TOP SLABS WITH BOLT ON FRAME AND COVER.
9. THIS DETAIL SHALL BE CONSIDERED A RECOMMENDED CONFIGURATION AND COMPARABLE SHOP DRAWINGS MAY BE SUBMITTED FOR APPROVAL.
10. PENETRATING LIFTING HOLES SHALL BE PLUGGED WITH NON-SHRINK GROUT.
11. FOR 8' INSIDE DIAMETER MANHOLES, 6' CONES MAY BE USED IN LIEU OF FLAT TOP SLABS OR TRANSITION SECTIONS TO 4' CONES.

CHARLOTTE – MECKLENBURG
UTILITY DEPARTMENT
ENGINEERING DIVISION
CHARLOTTE, NORTH CAROLINA

Job No.	File No.
Scales	
PLAN	NTS
PROFILE Hor.	
Ver.	
As Built	Date

STANDARD DETAIL
SEWER

PRECAST MANHOLE
6' AND 8' DIAMETER

No.	Date	By	Revision

Surveyed By	Designed By	Drawn By	Project Eng.	Approved By	Date	Drawing	Of
						7	

SHEETS\STANDARD DETAILS.DGN

07-SEP-2017 08:49
C:\Projects\2017\U-5804B\Design\Utilities\Engineering\UC\Proj\U5804B_ut_dtl_UC3A_UC3C.psh
Server: FILES
$$$$USERNAME$$$$

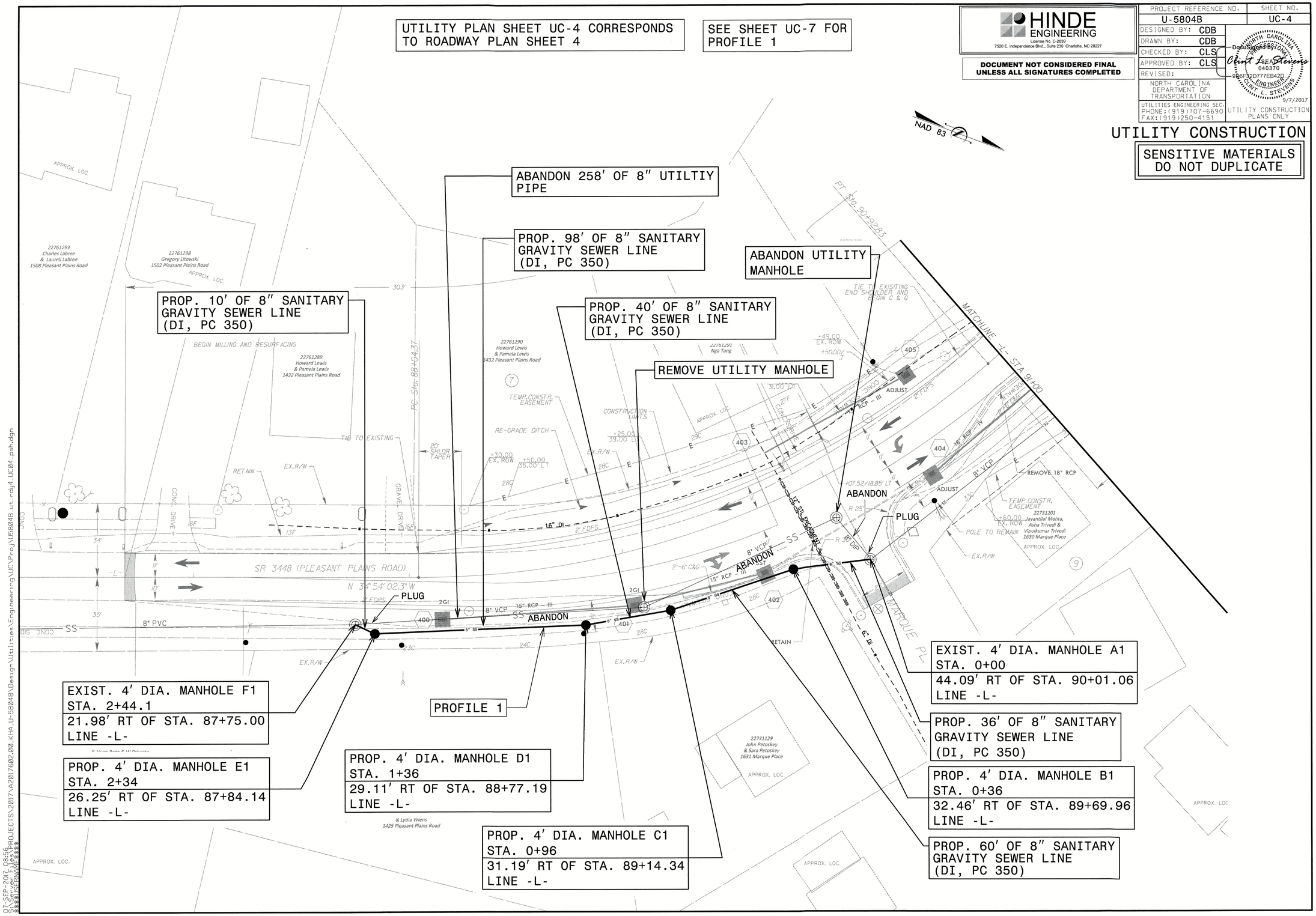
UTILITY PLAN SHEET UC-4 CORRESPONDS TO ROADWAY PLAN SHEET 4
SEE SHEET UC-7 FOR PROFILE 1
HINDE ENGINEERING
License No. C-2639
7520 E. Independence Blvd., Suite 230 Charlotte, NC 28227
DOCUMENT NOT CONSIDERED FINAL UNLESS ALL SIGNATURES COMPLETED
PROJECT REFERENCE NO. U-5804B
SHEET NO. UC-4
DESIGNED BY: CDB
DRAWN BY: CDB
CHECKED BY: CLS
APPROVED BY: CLS
REVISED:
NORTH CAROLINA DEPARTMENT OF TRANSPORTATION
UTILITIES ENGINEERING SEC.
PHONE:(919)707-6690
FAX:(919)250-4151
UTILITY CONSTRUCTION PLANS ONLY
9/7/2017
UTILITY CONSTRUCTION
SENSITIVE MATERIALS DO NOT DUPLICATE
NAD 83
ABANDON 258' OF 8" UTILTIY PIPE
PROP. 98' OF 8" SANITARY GRAVITY SEWER LINE (DI, PC 350)
ABANDON UTILITY MANHOLE
PROP. 10' OF 8" SANITARY GRAVITY SEWER LINE (DI, PC 350)
PROP. 40' OF 8" SANITARY GRAVITY SEWER LINE (DI, PC 350)
REMOVE UTILITY MANHOLE
PLUG
ABANDON
PLUG
ABANDON
ABANDON
SR 3448 (PLEASANT PLAINS ROAD)
N 34° 54' 02.3" W
MATCHLINE -L- STA 91+00
PT Sta. 90+92.83
PC Sta. 88+04.37
MARQUE PL.
EXIST. 4' DIA. MANHOLE F1
STA. 2+44.1
21.98' RT OF STA. 87+75.00
LINE -L-
PROP. 4' DIA. MANHOLE E1
STA. 2+34
26.25' RT OF STA. 87+84.14
LINE -L-
PROFILE 1
PROP. 4' DIA. MANHOLE D1
STA. 1+36
29.11' RT OF STA. 88+77.19
LINE -L-
PROP. 4' DIA. MANHOLE C1
STA. 0+96
31.19' RT OF STA. 89+14.34
LINE -L-
EXIST. 4' DIA. MANHOLE A1
STA. 0+00
44.09' RT OF STA. 90+01.06
LINE -L-
PROP. 36' OF 8" SANITARY GRAVITY SEWER LINE (DI, PC 350)
PROP. 4' DIA. MANHOLE B1
STA. 0+36
32.46' RT OF STA. 89+69.96
LINE -L-
PROP. 60' OF 8" SANITARY GRAVITY SEWER LINE (DI, PC 350)
22761293 Charles Labree & Laurell Labree 1508 Pleasant Plains Road
22761298 Gregory Litowski 1502 Pleasant Plains Road
22761289 Howard Lewis & Pamela Lewis 1432 Pleasant Plains Road
22761290 Howard Lewis & Pamela Lewis 1432 Pleasant Plains Road
22761291 Nga Tang
22731201 Jayantilal Mehta, Asha Trivedi & Vipulkumar Trivedi 1630 Marque Place
22731129 John Petoskey & Sara Petoskey 1631 Marque Place
& Lydia Wiens 1425 Pleasant Plains Road
BEGIN MILLING AND RESURFACING
TIE TO EXISTING END SHOULDER AND BEGIN C & G
TEMP. CONSTR. EASEMENT
RE-GRADE DITCH
CONSTRUCTION LIMITS
TIE TO EXISTING
RETAIN
EX.R/W
APPROX. LOC.
REMOVE 18" RCP
POLE TO REMAIN
ADJUST
8" VCP
8" PVC
16" DI
15" RCP - III
12" ST. ENCASEMENT
6" DI
2' FDPS
2GI
303'
07-SEP-2017 08:56
S:\Server Files\PROJECTS\2017\A2017602.00_KHA_U-5804B\Design\Utilities\Engineering\UC\Proj\U5804B_ut_rdy4_UC04_psh.dgn
$$$$USERNAME$$$$

PROJECT REFERENCE NO.	SHEET NO.
U-5804B	UC-5

DESIGNED BY: CDB
DRAWN BY: CDB
CHECKED BY: CLS
APPROVED BY: CLS
REVISED:

NORTH CAROLINA DEPARTMENT OF TRANSPORTATION
UTILITIES ENGINEERING SEC.
PHONE:(919)707-6690
FAX:(919)250-4151

UTILITY CONSTRUCTION PLANS ONLY

HINDE ENGINEERING
License No. C-2639
7520 E. Independence Blvd., Suite 230 Charlotte, NC 28227

DOCUMENT NOT CONSIDERED FINAL UNLESS ALL SIGNATURES COMPLETED

SENSITIVE MATERIALS DO NOT DUPLICATE

UTILITY CONSTRUCTION

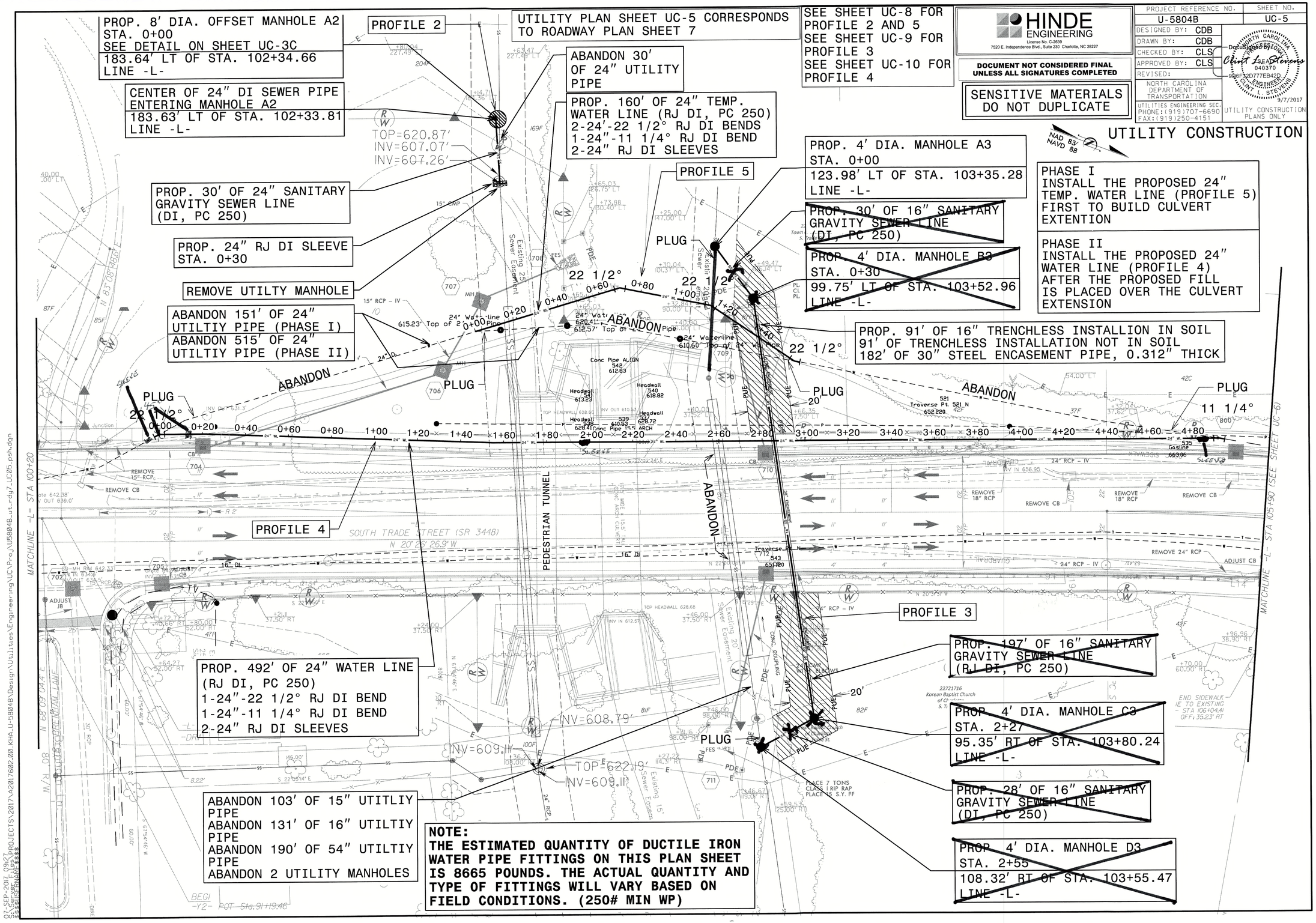

UTILITY PLAN SHEET UC-6 CORRESPONDS TO ROADWAY PLAN SHEET 8

HINDE ENGINEERING
License No. C-2639
7520 E. Independence Blvd., Suite 230 Charlotte, NC 28227

DOCUMENT NOT CONSIDERED FINAL UNLESS ALL SIGNATURES COMPLETED

PROJECT REFERENCE NO.	SHEET NO.
U-5804B	UC-6
DESIGNED BY: CDB	
DRAWN BY: CDB	
CHECKED BY: CLS	
APPROVED BY: CLS	
REVISED:	

NORTH CAROLINA DEPARTMENT OF TRANSPORTATION
UTILITIES ENGINEERING SEC.
PHONE:(919)707-6690
FAX:(919)250-4151

DocuSigned by: Clint Stevens 9D6F42D777EB42D...
NORTH CAROLINA SEAL 040370 ENGINEER CLINT L. STEVENS
9/7/2017

UTILITY CONSTRUCTION PLANS ONLY

UTILITY CONSTRUCTION

SENSITIVE MATERIALS DO NOT DUPLICATE

NAD 83

PROP. RELOCATE FIRE HYDRANT

-L- STA 105+90 (SEE SHEET UC-5)

MATCHLINE -L- STA 105+90

SOUTH TRADE STREET (SPI 3448)

CHAPMYN LANE -Y3-

Rd. Relocation -L8 NW

Existing 20' Drainage Easement

N 66°59'19.6" E
-Y8- PT Sta. 404+17.39
END CONSTRUCTION
-Y3- STA 404+34.42
-L- POC Sta. 107+53.76 =
-Y3- POT Sta. 405+00.00
△ = 106° 08' 55.8"

RETAIN EXISTING MONOLITHIC CONCRETE ISLAND AND ISLAND CURB RAMPS

280' TAPER
+75.99 95.49' LT
+93.03 100.50' LT
RIGHT OF WAY SHOWN WAS PREVIOUSLY ACQUIRED BY NCDOT PER U-5205 PROJECT
-L- POC Sta.106+76.22
END GRADE BEGIN MILLING AND RESURFACING +70.00 66.00' LT

MAINTAIN RAMP
END SIDEWALK TIE TO EXISTING STA 107+05.29 -L- 59.69' LT
+48.55 39.46' LT

RFH
6" PVC
RETAIN
50F
40F
24" DI
24" RCP - IV
CB 803
REMOVE 18" RCP
REMOVE CB
REMO AND RECONSTRUCT 5' MONOLITHIC CONC ISLAND
R=2
R 30'
INV OUT 668.08
12" SS ENCASEMENT
INV IN 665.78
ADJUST
PIPE REMOVED WITH SOUTH TRADE STREET PROJECT
RETAIN CURB
INV OUT 665.98
RETAIN
CONC SIDEWALK
+44.85 39.65' RT
RETAIN
RETAIN CB
55F
PER KHA PLAN
MD CURB AND GUTTER TIE TO EXISTING +45.00 -L- STA 106+35.4 68.00' RT OFF: 27.89' RT
RIGHT OF WAY SHOWN WAS PREVIOUSLY ACQUIRED BY THE TOWN OF MATTHEWS
355' TAPER
CONCRETE DRIVEWAY
ASPHALT DRIVEWAY
RETAIN CB
RETAIN EXISTING MONOLITHIC CONCRETE ISLAND
RETAIN 18" RCP
RETAIN CURB
INV IN 672.10
RETAIN CB
RETAIN
31F
PT Sta. 108+71.33
-L- PT Sta. 108+71.33
N 66°59'19.6" E 273.47'
N 23°01'04" E 261.74'
L21
N 66°55'40" E 171.01'
LIP 677.66
INV IN 674.11
INV OUT 672.22
N 66°59'06" E 30.00'
CONC. SIDEWALK
22721715
Korean Baptist Church of Charlotte
S. Trade St.

07-SEP-2017 09:07
S:\PROJECTS\2017\A20176002.00.KHA.U-5804B\Design\Utilities\Engineering\UCVP-proj\U5804B_ut_rdy8_UC06_psh.dgn
$$$$USERNAME$$$$

35

HINDE ENGINEERING
License No. C-2639
401 Harrison Oaks Blvd., Suite 145 Cary, NC 27513

DOCUMENT NOT CONSIDERED FINAL UNLESS ALL SIGNATURES COMPLETED

PROJECT REFERENCE NO.	SHEET NO.
U-5804B	UC-7

DESIGNED BY: CDB
DRAWN BY: CDB
CHECKED BY: CLS
APPROVED BY: CLS
REVISED:

NORTH CAROLINA DEPARTMENT OF TRANSPORTATION
UTILITIES ENGINEERING SEC.
PHONE:(919)707-6690
FAX:(919)250-4151

DocuSigned by: Clint L. Stevens
9/7/2017
UTILITY CONSTRUCTION PLANS ONLY

UTILITY CONSTRUCTION

SENSITIVE MATERIALS
DO NOT DUPLICATE

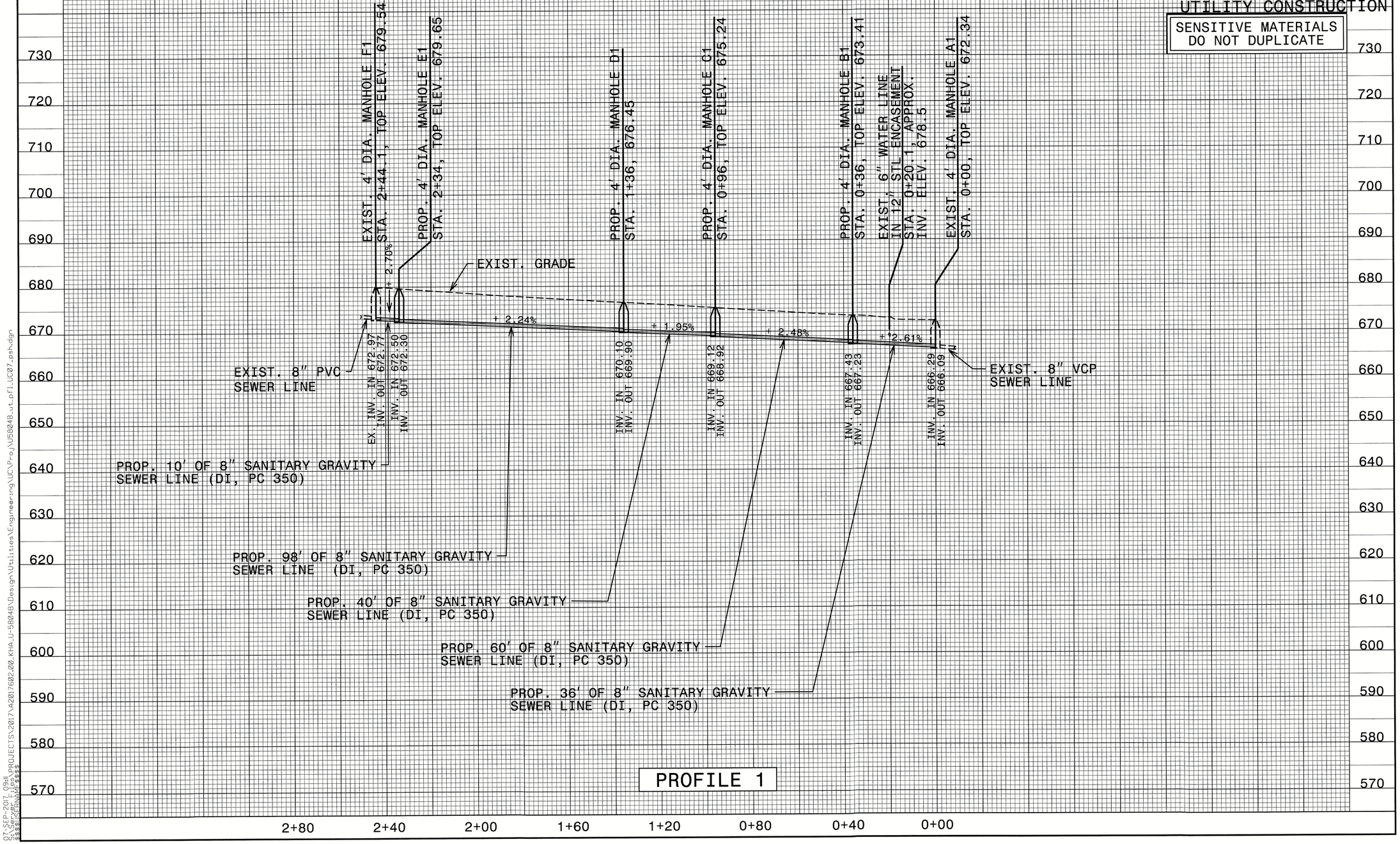

PROFILE 1

07-SEP-2017 09:11
S:\Server Files\PROJECTS\2017\A2017602.00_KHA_U-5804B\Design\Utilities\Engineering\UC\Proj\U5804B_ut_pfl_UC07_psh.dgn
$$$$USERNAME$$$$

36

HINDE ENGINEERING
License No. C-2639
401 Harrison Oaks Blvd., Suite 145 Cary, NC 27513

DOCUMENT NOT CONSIDERED FINAL UNLESS ALL SIGNATURES COMPLETED

PROJECT REFERENCE NO.	SHEET NO.
U-5804B	UC-8

DESIGNED BY: CDB
DRAWN BY: CDB
CHECKED BY: CLS
APPROVED BY: CLS
REVISED:

NORTH CAROLINA DEPARTMENT OF TRANSPORTATION
UTILITIES ENGINEERING SEC.
PHONE:(919)707-6690
FAX:(919)250-4151

NORTH CAROLINA PROFESSIONAL SEAL 040370 ENGINEER CLINT L. STEVENS
DocuSigned by: Clint L. Stevens
12/4/2017

UTILITY CONSTRUCTION PLANS ONLY

UTILITY CONSTRUCTION

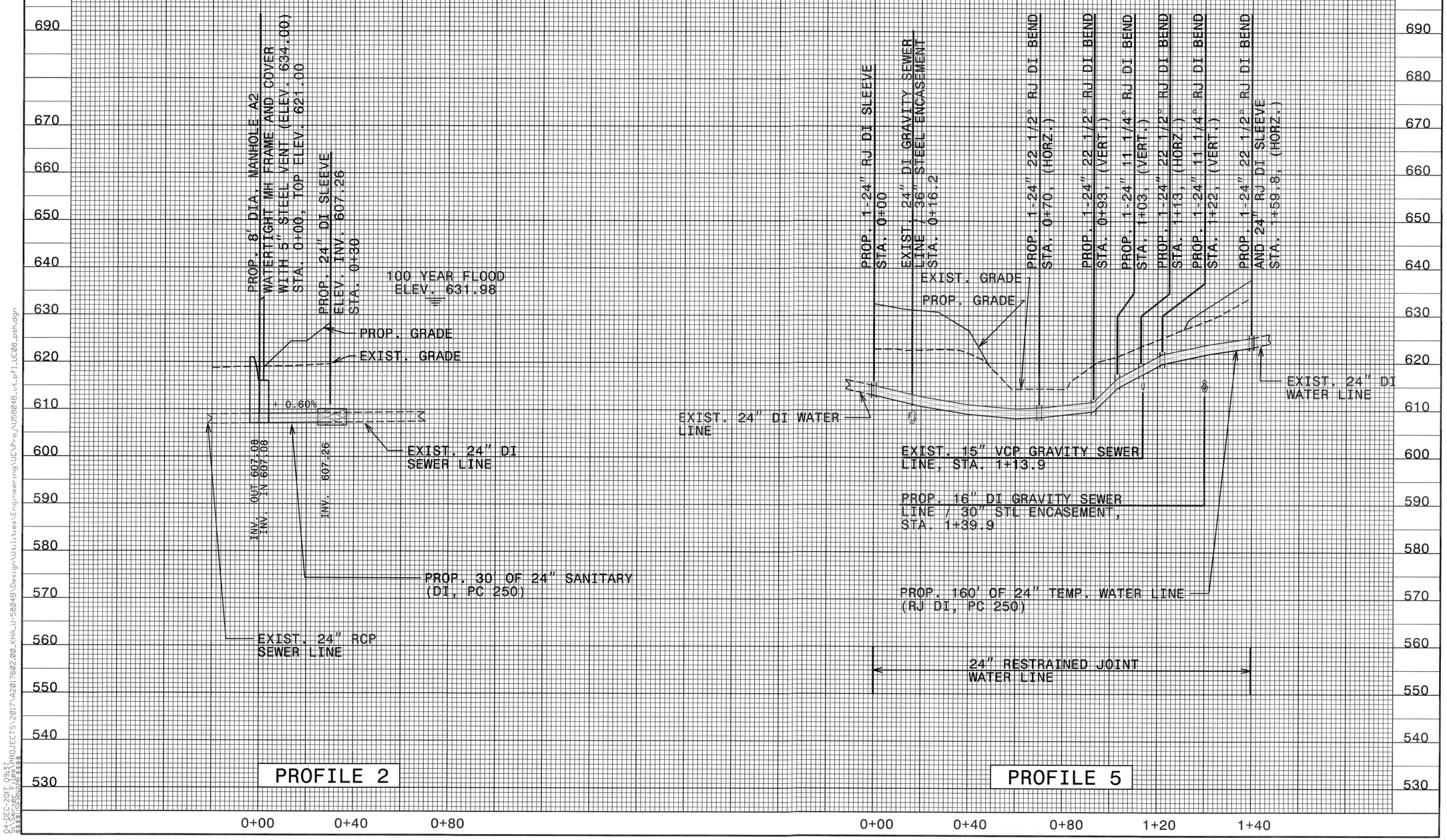

04-DEC-2017 09:37
S:\Server Files\PROJECTS\2017\A2017602.00_KHA_U-5804B\Design\Utilities\Engineering\UC\Proj\U5804B_ut_pfl_UC08_psh.dgn
$$$$USERNAME$$$$

HINDE ENGINEERING
License No. C-2639
401 Harrison Oaks Blvd., Suite 145 Cary, NC 27513

DOCUMENT NOT CONSIDERED FINAL UNLESS ALL SIGNATURES COMPLETED

PROJECT REFERENCE NO.	SHEET NO.
U-5804B	UC-9

DESIGNED BY: CDB
DRAWN BY: CDB
CHECKED BY: CLS
APPROVED BY: CLS
REVISED:

NORTH CAROLINA DEPARTMENT OF TRANSPORTATION
UTILITIES ENGINEERING SEC.
PHONE:(919)707-6690
FAX:(919)250-4151

NORTH CAROLINA PROFESSIONAL SEAL 040370 ENGINEER CLINT L. STEVENS 9/7/2017
Docusigned by: Clint L. Stevens
9D6F32D777EB42D
UTILITY CONSTRUCTION PLANS ONLY

UTILITY CONSTRUCTION

SENSITIVE MATERIALS
DO NOT DUPLICATE

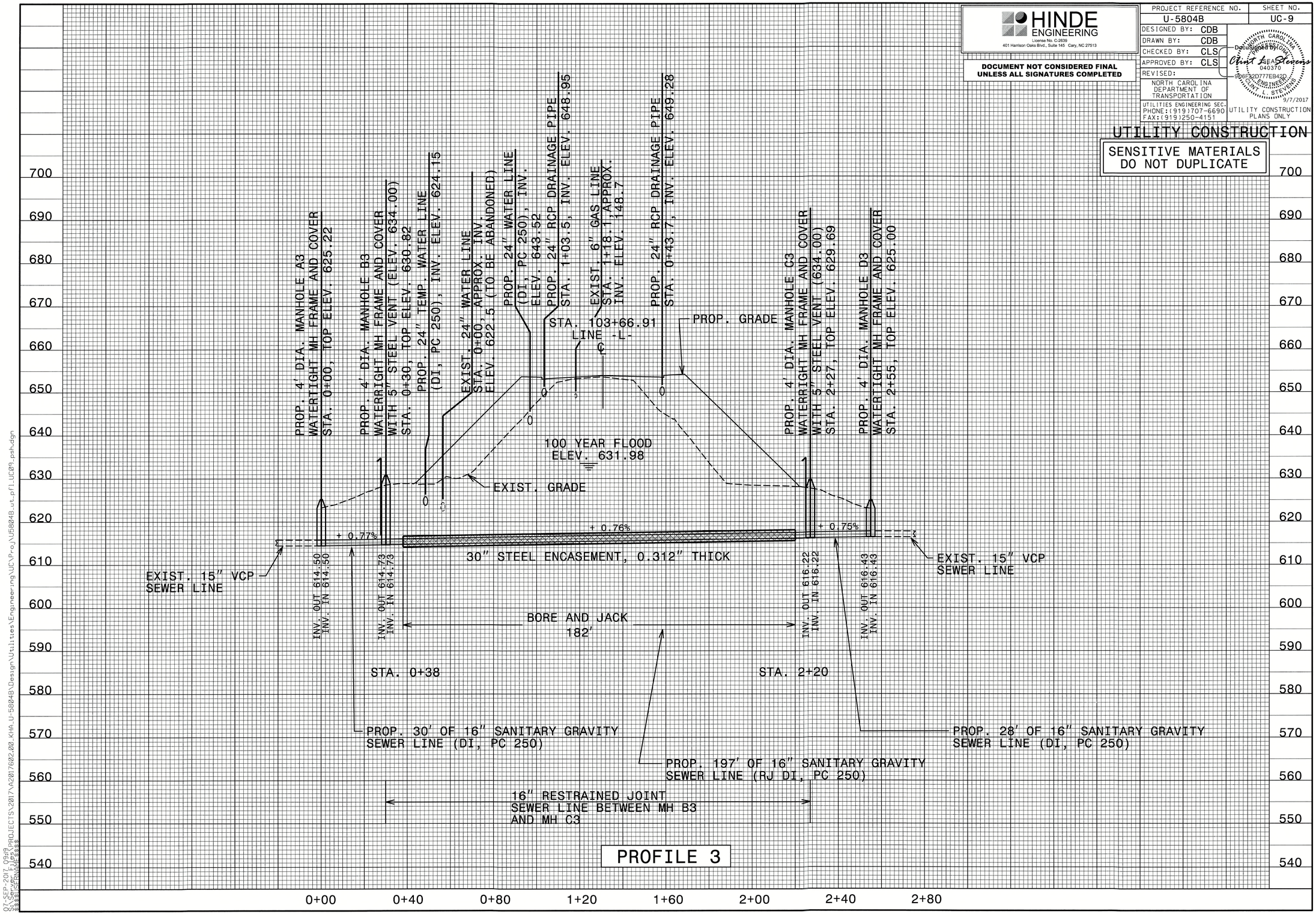

PROFILE 3

07-SEP-2017 09:19
S:\Server Files\PROJECTS\2017\A2017602.00_KHA_U-5804B\Design\Utilities\Engineering\UC\Proj\U5804B_ut_pfl_UC09_psh.dgn
$$$$USERNAME$$$$

HINDE ENGINEERING
License No. C-2639
401 Harrison Oaks Blvd., Suite 145 Cary, NC 27513

DOCUMENT NOT CONSIDERED FINAL UNLESS ALL SIGNATURES COMPLETED

SENSITIVE MATERIALS DO NOT DUPLICATE

PROJECT REFERENCE NO.	SHEET NO.
U-5804B	UC-10

DESIGNED BY: CDB
DRAWN BY: CDB
CHECKED BY: CLS
APPROVED BY: CLS
REVISED:

NORTH CAROLINA DEPARTMENT OF TRANSPORTATION
UTILITIES ENGINEERING SEC.
PHONE:(919)707-6690
FAX:(919)250-4151

DocuSigned by: Clint L. Stevens
9B6F32D777EB42D
NORTH CAROLINA PROFESSIONAL SEAL 040370 ENGINEER CLINT L. STEVENS
9/7/2017

UTILITY CONSTRUCTION PLANS ONLY

UTILITY CONSTRUCTION

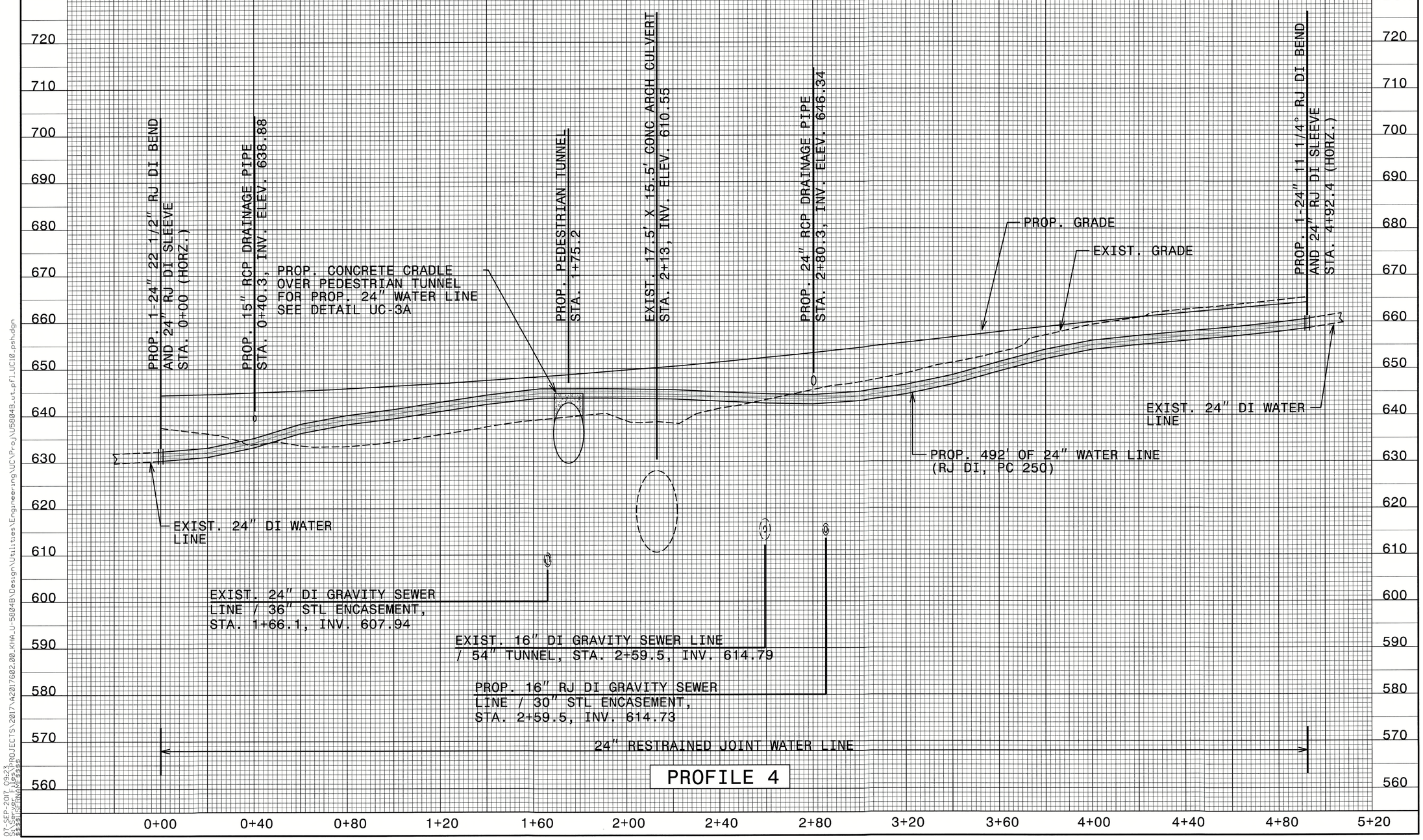

PROFILE 4

07-SEP-2017 09:23
S:\Server Files\PROJECTS\2017\A2017602.00_KHA_U-5804B\Design\Utilities\Engineering\UC\Proj\U5804B_ut_pfl_UC10_psh.dgn
$$$$USERNAME$$$$

DocuSign Envelope ID: F0D3147D-5360-48F4-8C08-A6EB766D1CC5

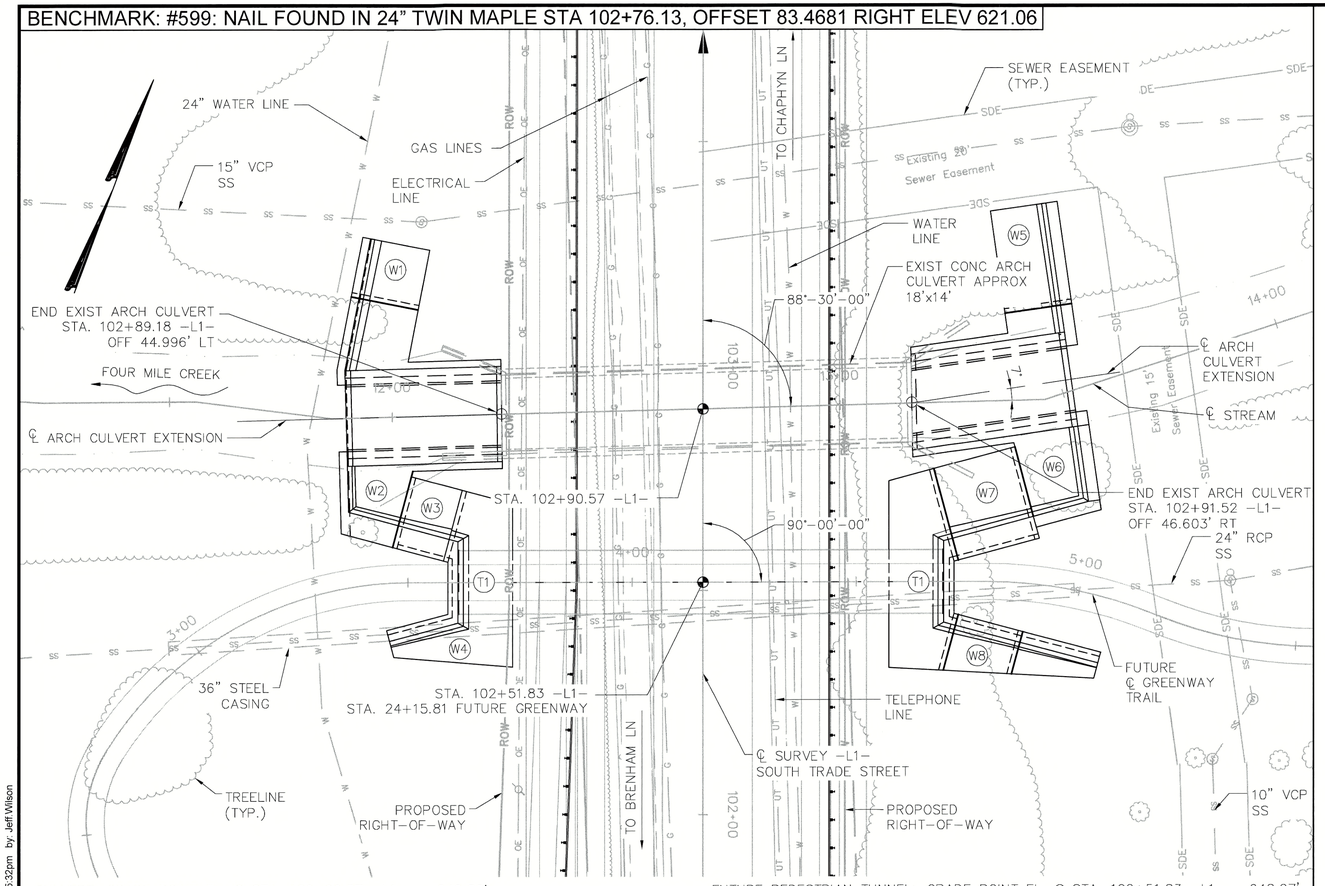

CULVERT: GRADE POINT EL. @ STA. 102+90.57 -L1- 649.82'
BED EL. @ STA. 102+90.57 -L1- 612.70'
ROADWAY SLOPES 2:1 MAX

FUTURE PEDESTRIAN TUNNEL: GRADE POINT EL. @ STA. 102+51.83 -L1- 648.27'
WALKWAY EL. @ STA. 102+51.83 -L1- 630.44'
ROADWAY SLOPES 2:1 MAX

LOCATION SKETCH

FOR UTILITY INFORMATION, SEE UTILITY PLANS AND SPECIAL PROVISIONS.

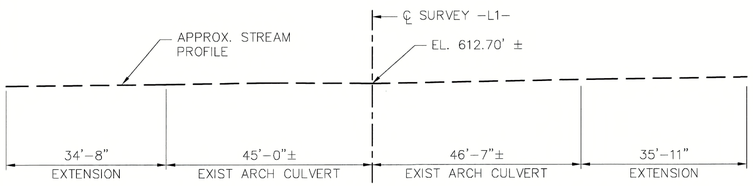

PROFILE ALONG ℄ ARCH CULVERT

NTS

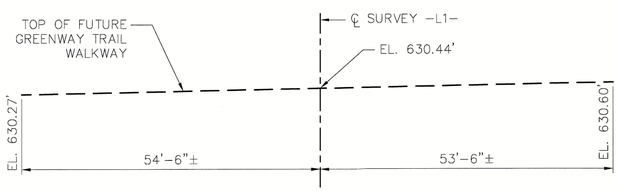

PROFILE ALONG ℄ FUTURE GREENWAY TUNNEL

NTS

HYDRAULIC DATA	
DESIGN DISCHARGE	2,927 CFS
FREQUENCY OF DESIGN FLOOD	50 YR.
DESIGN HIGH WATER ELEVATION	630.18 FT.
DRAINAGE AREA	4.1 SQ. MI.
BASIC DISCHARGE (Q100)	3,298 CFS
BASIC HIGH WATER ELEVATION	631.98 FT.
OVERTOPPING DATA	
OVERTOPPING DISCHARGE	5,614 CFS
FREQUENCY OF OVERTOPPING FLOOD	>500 YR.
OVERTOPPING FLOOD ELEVATION	644.00 FT.

BAR SIZE	SPLICE LENGTH
#4	1'-9"
#5	2'-2"
#6	2'-9"
#7	3'-9"
#8	4'-11"

TOTAL STRUCTURE QUANTITIES

CLASS A CONCRETE		
BARREL @ 4.80 CY/FT	338.6	C.Y.
WING ETC.	560	C.Y.
TOTAL	898.6	C.Y.
REINFORCING STEEL		
BARREL	48,165	LBS.
WINGS ETC.	66,762	LBS.
TOTAL	114,927	LBS.
FOUNDATION EXCAVATION, STA. 102+90.57 -L-	1,500	CY
FOUNDATION CONDITIONING MATERIAL	170	TONS
REMOVAL OF EXIST WINGS	LS	
TUNNEL GATE	LS	

NOTES:

ASSUMED LIVE LOAD_____HL-93 OR ALTERNATE LOADING.

DESIGN FILL
ARCH CULVERT EXTENSION_____ 22.0'
FUTURE GREENWAY TRAIL TUNNEL_____ 5.9'

FOR OTHER DESIGN DATA AND GENERAL NOTES, SEE SHEET SN.

DESIGN PARAMETERS:
MINIMUM ALLOWABLE ROCK BEARING PRESSURE = 8,000 PSF
MINIMUM ALLOWABLE SOIL BEARING PRESSURE = 4,000 PSF
COEFFICIENT OF FRICTION FOR FOUNDATIONS BEARING ON ROCK = 0.60
COEFFICIENT OF FRICTION FOR FOUNDATIONS BEARING ON SOIL = 0.35
PHI ANGLE FOR SOIL BACKFILL = 28°
SOIL DENSITY = 120 PCF

ARCH CULVERT EXTENSIONS, WINGS W1, W2, W5, AND W6 SHALL BEAR ON ROCK TUNNEL HEADWALL T1, WINGS W3, W4, W7, AND W8 SHALL BEAR ON SOIL

MINIMUM CONCRETE COMPRESSIVE STRENGTH = 3,000 PSI
ALL REINFORCING SHALL BE GRADE 60.

NO WORK SHALL BE COMPLETED ON WINGS W3, W4, W7, AND W8 UNTIL THE AREAS OF THE WINGS HAVE BEEN UNDERCUT A MINIMUM DEPTH OF 2' AND A GEOTECHNICAL ENGINEER HAS INSPECTED THE AREA TO VERIFY THE ASSUMED DESIGN SOIL PARAMETERS. UNSUITABLE MATERIAL SHALL BE REPLACED WITH SUITABLE SELECT MATERIAL, PROPERLY COMPACTED TO THE ELEVATION OF THE BOTTOM OF THE PROPOSED WING WALL FOUNDATION. THE LIMITS OF THIS UNDERCUT EXCAVATION SHALL BE A MINIMUM OF 1' LARGER THAN THE WING FOOTINGS.

NO SEPARATE PAYMENT WILL BE MADE FOR ANY TEMPORARY SHEETING, UNDERCUT, OR UNSUITABLE MATERIAL REPLACEMENT AS REQUIRED TO CONSTRUCT THE PROPOSED CULVERT, TUNNEL, OR WING FOUNDATIONS. PAYMENT IS INCLUDED IN THE PAY ITEM FOR CULVERT EXCAVATION.

CONCRETE IN CULVERT EXTENSIONS TO BE POURED IN THE FOLLOWING ORDER:

1. CULVERT AND WING FOUNDATIONS W1, W2, W5 AND W6 INCLUDING FOUNDATION STEPS AND 4" OF VERTICAL WALLS.
2. REMAINING PORTIONS OF THE CULVERT BARREL WALLS AND TOP SLAB.
3. REMAINING WING FOUNDATIONS INCLUDING FOUNDATION STEPS AND 4" OF VERTICAL WALLS. AT CONTRACTOR'S OPTION, W1, W2, W5 AND W6 WINGS FULL HEIGHT.
4. REMAINING VERTICAL WALLS.

3" ø WEEP HOLES INDICATED TO BE IN ACCORDANCE WITH NCDOT SPECIFICATIONS.

THE CONTRACTOR SHALL CHECK THE LENGTH OF ARCH CULVERT EXTENSIONS AND GREENWAY TRAIL TUNNEL BEFORE STAKING IT OUT TO CONFIRM IT IS ADEQUATE TO RETAIN FILL.

DIMENSIONS FOR WING LAYOUT AS WELL AS ADDITIONAL REINFORCING STEEL EMBEDDED IN BARREL ARE SHOWN ON WING SHEETS.

AT THE CONTRACTOR'S OPTION HE MAY SPLICE THE VERTICAL REINFORCING STEEL IN THE INTERIOR FACE OF EXTERIOR WALL ABOVE THE LOWER WALL CONSTRUCTION JOINT. THE SPLICE LENGTH SHALL BE AS PROVIDED IN THE SPLICE LENGTH CHART SHOWN ON THE PLANS. EXTRA WEIGHT OF STEEL DUE TO THE SPLICES SHALL BE PAID FOR BY THE CONTRACTOR.

DOWELS SHALL BE USED TO CONNECT THE CULVERT EXTENSION TO THE EXISTING CULVERT AS SHOWN. FOR NOTE REGARDING SETTING OF DOWELS, SEE SHEET SN.

DETAILED DRAWINGS FOR FALSEWORK AND FORMS FOR CULVERT EXTENSIONS SHALL BE SUBMITTED. SEE SHEET SN.

ARCH CULVERT EXTENSION AND ALL WING WALLS SHALL MAINTAIN CLEARANCE FROM WATER LINE, SANITARY SEWER, AND SEWER EASEMENTS. CONTRACTOR SHALL BE RESPONSIBLE FOR ANY DAMAGE TO THESE LINES DURING CONSTRUCTION OF THESE ITEMS.

IF APPROVED BY THE ENGINEER, THE CONTRACTOR MAY USE THE EXISTING WINGS AS TEMPORARY SHORING FOR THE CONSTRUCTION OF THE ARCH CULVERT EXTENSIONS. THE SOUTH WEST EXISTING ARCH CULVERT WING SHALL BE COMPLETELY REMOVED TO ALLOW THE CONSTRUCTION OF THE EXTENSION.

A 3 FOOT STRIP OF FILTER FABRIC SHALL BE ATTACHED TO THE FILL FACE OF THE WING COVERING THE ENTIRE LENGTH OF THE EXPANSION JOINT.

NO PRECAST BOX CULVERT OPTION WILL BE ALLOWED.

THE SCOUR CRITICAL ELEVATION FOR THE CULVERT IS THE BOTTOM OF FOOTING. THE SCOUR CRITICAL ELEVATIONS ARE USED TO MONITOR POSSIBLE SCOUR PROBLEMS DURING THE LIFE OF THE STRUCTURE.

DOCUMENT NOT CONSIDERED FINAL UNLESS ALL SIGNATURES COMPLETED

Kimley»Horn
© 2016 KIMLEY-HORN AND ASSOCIATES, INC.
421 Fayetteville Street, Suite 600
Raleigh, NC 27601-1772
Phone (919) 677-2000

NORTH CAROLINA PROFESSIONAL SEAL 040384 ENGINEER JEFFREY C. WILSON
Jeffrey C. Wilson 11/1/201

PROJ. REFERENCE NO.
44367.3.2

NO.	DATE	REVISIONS

CLIENT:
NORTH CAROLINA • DEPARTMENT OF TRANSPORTATION

PROJECT:
U - 5804B
SOUTH TRADE STREET
ROADWAY IMPROVEMENTS
COUNTY: MECKLENBURG
STATION: 102+51.83 -L1-

TITLE:
LOCATION SKETCH & QUANTITIES
CULVERT PLANS
SOUTH TRADE STREET

DESIGNED BY:	CTP
DRAWN BY:	JJD
CHECKED BY:	JCW
DATE:	11/01/2017
PROJECT#:	015484010

S-1

Drawing name: K:\RDT_Structures_Culvert\NC\015484006 Trade Str Culvert\Cad\Dwgs\S1_LOC_QTY.dwg Layout 22 x 34 Nov 01, 2017 5:32pm by Jeff Wilson

THIS DOCUMENT, TOGETHER WITH THE CONCEPTS AND DESIGNS PRESENTED HEREIN, AS AN INSTRUMENT OF SERVICE, IS INTENDED ONLY FOR THE SPECIFIC PURPOSE AND CLIENT FOR WHICH IT WAS PREPARED. REUSE OF AND IMPROPER RELIANCE ON THIS DOCUMENT WITHOUT WRITTEN AUTHORIZATION AND ADAPTATION BY KIMLEY-HORN AND ASSOCIATES, INC. SHALL BE WITHOUT LIABILITY TO KIMLEY-HORN AND ASSOCIATES, INC.

DocuSign Envelope ID: 86970079-08D7-4A9A-92F0-A5C74B784302

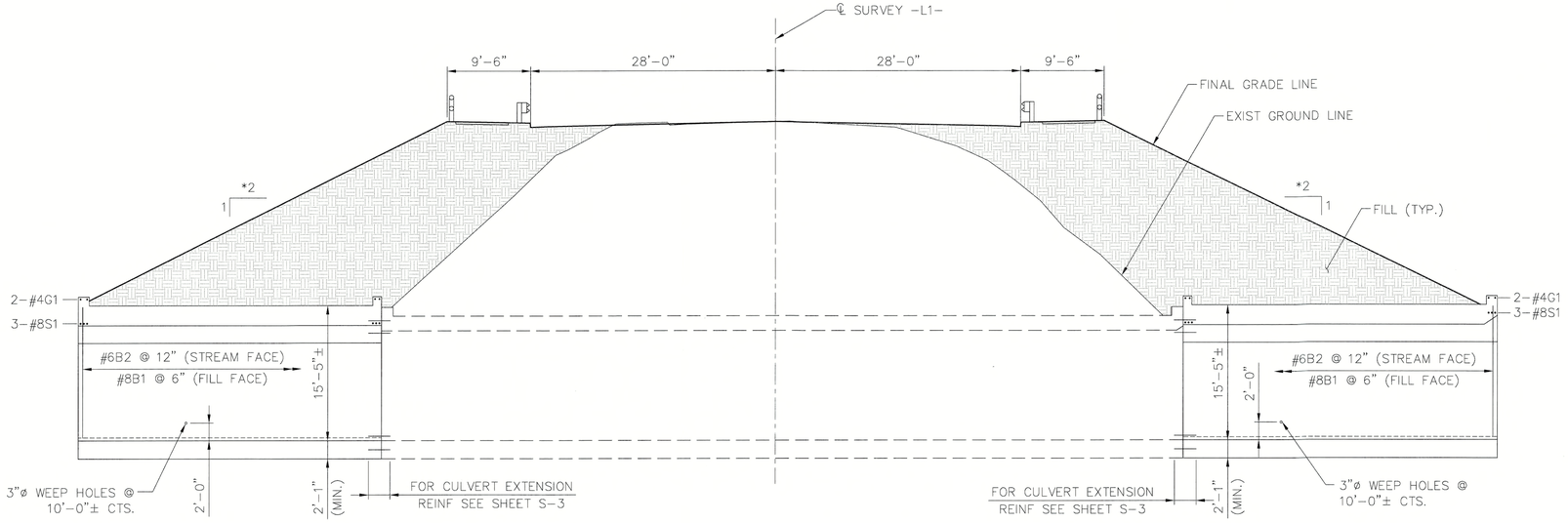

ELEVATION ALONG ℄ ARCH CULVERT

SCALE: 1/8" = 1'-0"

NOTES:

* MAX ROADWAY FILL SLOPES SHOWN MEASURED NORMAL TO ℄ SURVEY

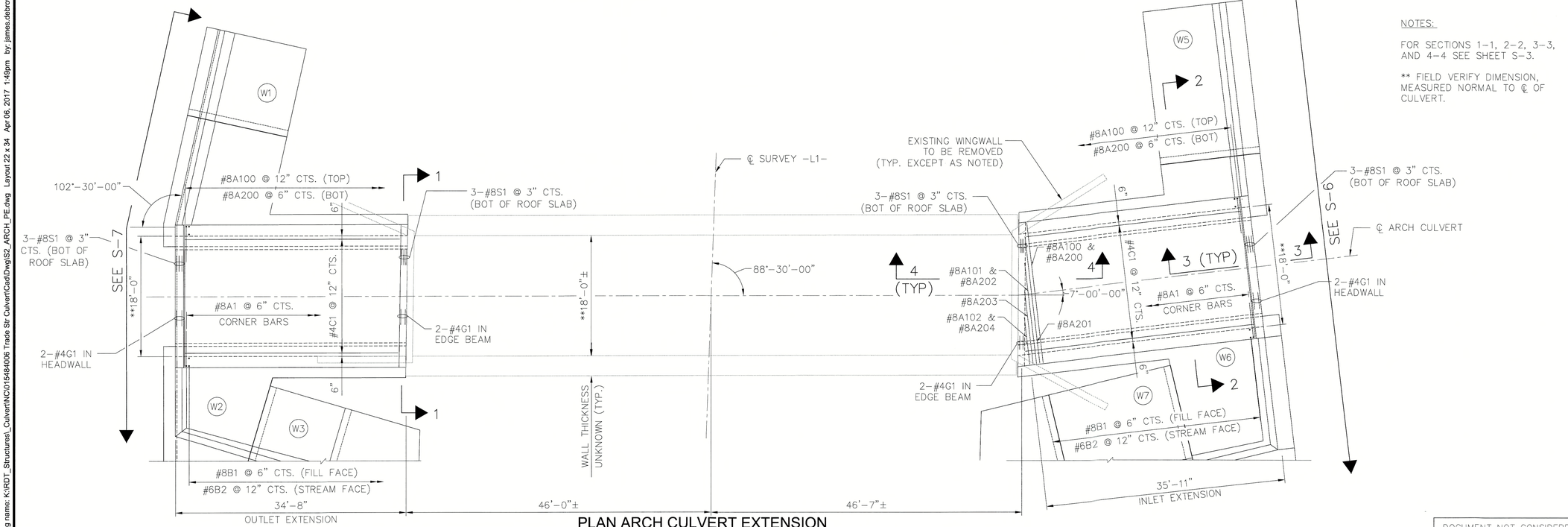

PLAN ARCH CULVERT EXTENSION

SCALE: 1/8" = 1'-0"

NOTES:

FOR SECTIONS 1-1, 2-2, 3-3, AND 4-4 SEE SHEET S-3.

** FIELD VERIFY DIMENSION, MEASURED NORMAL TO ℄ OF CULVERT.

DOCUMENT NOT CONSIDERED FINAL UNLESS ALL SIGNATURES COMPLETED

THIS DOCUMENT, TOGETHER WITH THE CONCEPTS AND DESIGNS PRESENTED HEREIN, AS AN INSTRUMENT OF SERVICE, IS INTENDED ONLY FOR THE SPECIFIC PURPOSE AND CLIENT FOR WHICH IT WAS PREPARED. REUSE OF AND IMPROPER RELIANCE ON THIS DOCUMENT WITHOUT WRITTEN AUTHORIZATION AND ADAPTATION BY KIMLEY-HORN AND ASSOCIATES, INC. SHALL BE WITHOUT LIABILITY TO KIMLEY-HORN AND ASSOCIATES, INC.

Kimley»Horn
© 2016 KIMLEY-HORN AND ASSOCIATES, INC.
421 Fayetteville Street, Suite 600
Raleigh, NC 27601-1772
Phone (919) 677-2000

NORTH CAROLINA PROFESSIONAL ENGINEER SEAL 040384 JOSEPH C. WILSON

DocuSigned by: Joseph C. Wilson C4D6E1AFCC0A46... 4/6/2017

PROJ. REFERENCE NO. 44367.3.2

NO.	DATE	REVISIONS

CLIENT:

PROJECT: U - 5804B SOUTH TRADE STREET ROADWAY IMPROVEMENTS — COUNTY: MECKLENBURG STATION: 102+51.83 -L1-

TITLE: ARCH CULVERT PLAN & ELEVATION — CULVERT PLANS SOUTH TRADE STREET

DESIGNED BY:	CTP
DRAWN BY:	JJD
CHECKED BY:	JCW
DATE:	04/06/2017
PROJECT#:	015484010

S-2

Drawing name: K:\RDT_Structures_Culvert\NC\015484006 Trade Str Culvert\Cad\Dwg\S2_ARCH_PE.dwg Layout 22 x 34 Apr 06, 2017 1:49pm by: james.debrow

DocuSign Envelope ID: 8697D079-08D7-4A9A-92F0-A5C74B784302

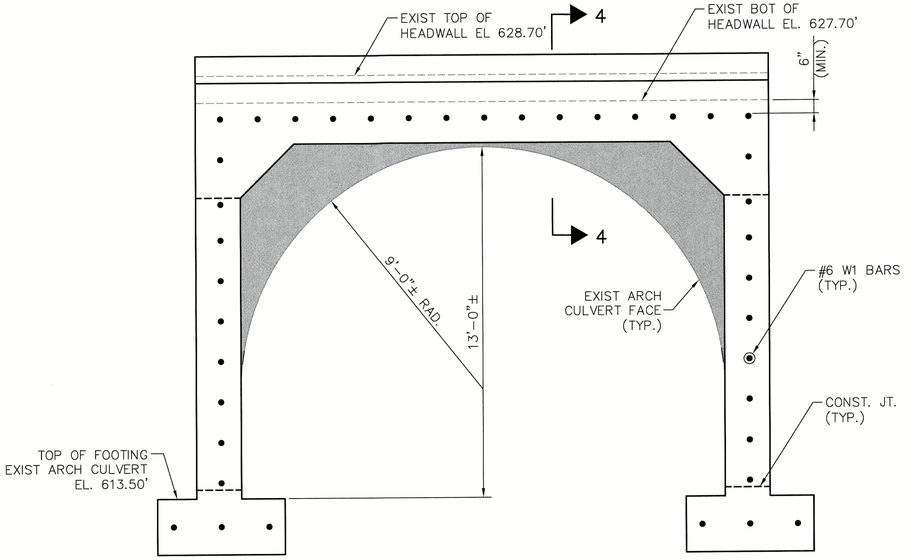

SECTION 1-1

OUTLET SHOWN, INLET SIMILAR
SCALE: 3/8" = 1'-0"
THERE ARE 39 "W" BARS IN SECTION OF BARREL

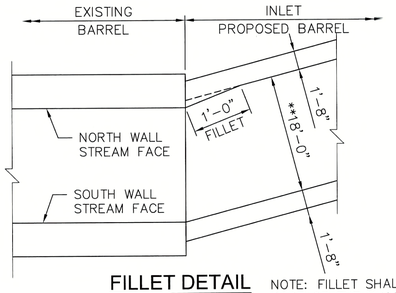

FILLET DETAIL

SCALE: NTS

NOTE: FILLET SHALL BE PART OF THE WALL POUR

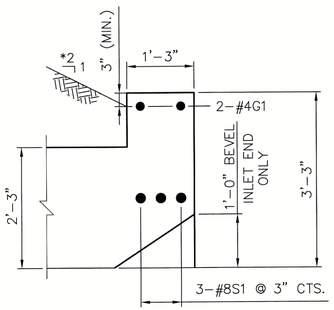

SECTION 3-3 - CULVERT HEADWALL

INLET SHOWN, OUTLET SIMILAR
SCALE: 3/4" = 1'-0"

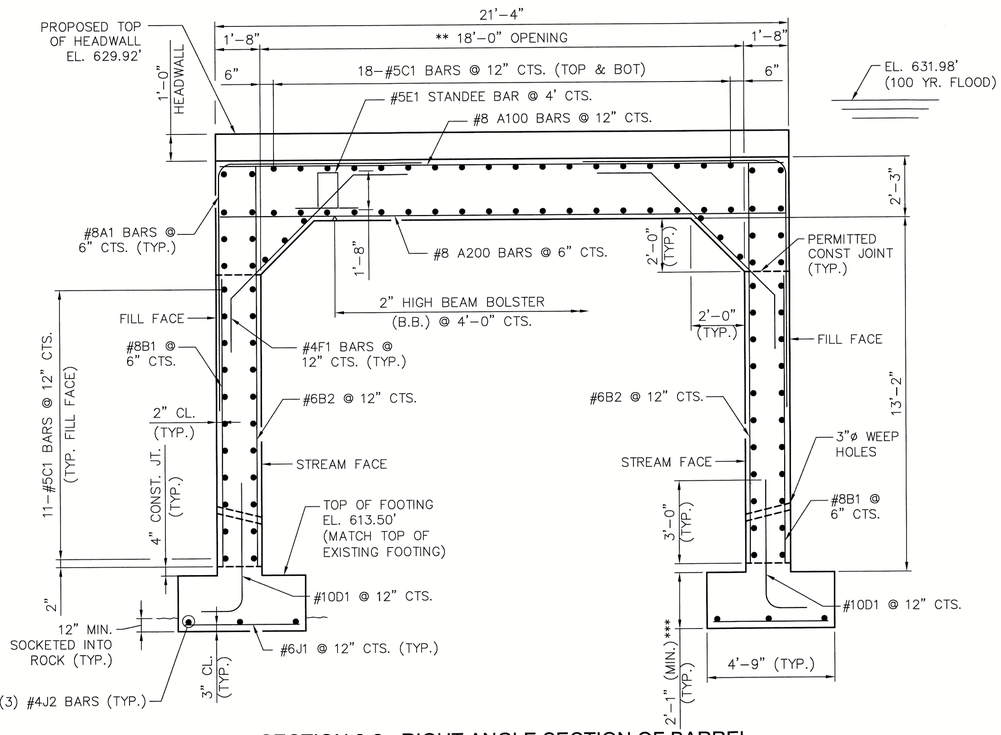

SECTION 2-2 - RIGHT ANGLE SECTION OF BARREL

SCALE: 3/8" = 1'-0"
THERE ARE 192 "C" BARS IN SECTION OF BARREL

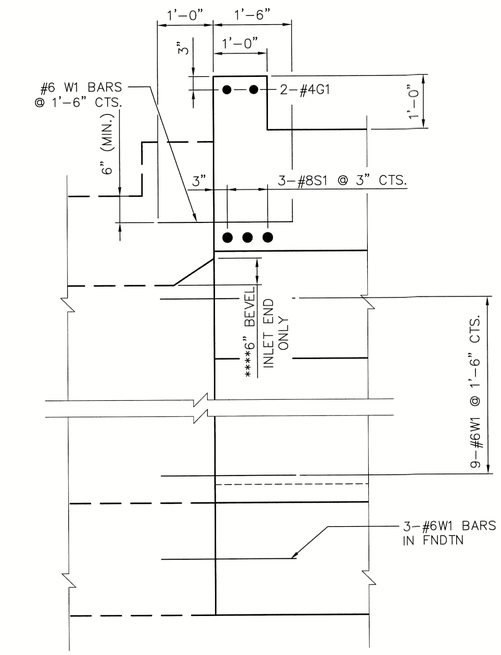

EXISTING BARREL PROPOSED BARREL

SECTION 4-4 - EXTENSION DOWELS

SCALE: 3/4" = 1'-0"

BAR TYPES

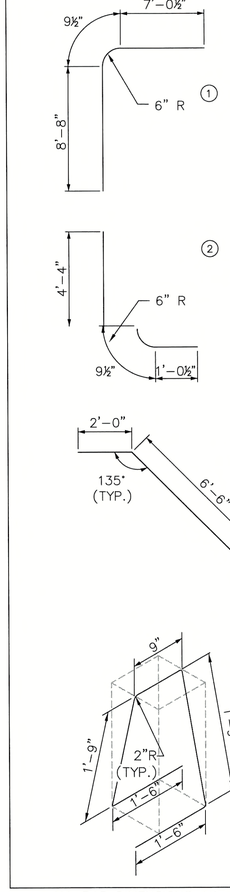

ALL BAR DIMENSIONS ARE OUT TO OUT.

BARREL, FOOTING AND HEADWALL BILL OF MATERIAL

BAR	NO.	SIZE	TYPE	LENGTH	WEIGHT
A100	66	8	STR	21'-0"	3701
A101	1	8	STR	15'-1"	40
A102	1	8	STR	7'-0"	19
A200	130	8	STR	21'-0"	289
A201	1	8	STR	19'-0"	51
A202	1	8	STR	15'-1"	40
A203	1	8	STR	11'-1"	30
A204	1	8	STR	7'-0"	19
A1	284	8	1	16'-6"	12512
B1	284	8	STR	10'-8"	8088
B2	146	6	STR	14'-10"	3253
C1	408	4	STR	10'-3"	5246
D1	146	10	2	6'-2"	3874
E1	80	5	4	7'-3"	605
F1	146	4	3	10'-6"	1024
G1	8	4	STR	21'-0"	112
J1	146	6	STR	4'-6"	987
J2	24	4	STR	19'-3"	309
S1	12	8	STR	21'-0"	673
W1	78	6	STR	2'-6"	293
REINFORCING STEEL –LBS–					48,165

NOTES:

SECTIONS 1–1, 2–2, 3–3, AND 4–4 REFERENCED ON SHEET S–2.

CULVERT FOUNDATIONS MUST BE EMBEDDED A MINIMUM OF 12" INTO ROCK. IF ACTUAL SITE CONDITIONS PREVENT MINIMUM 12" EMBEDMENT AT TOP OF FOOTING ELEVATION SHOWN, CONTRACTOR SHALL NOTIFY ENGINEER.

OUTLET CULVERT EXTENSION STREAM FACE WALLS SHALL LINE UP WITH EXISTING ARCH CULVERT WALLS (18' WIDTH – FIELD VERIFY).

INLET CULVERT EXTENSION SOUTH FACE STREAM FACE WALL SHALL LINE UP WITH EXISTING ARCH CULVERT SOUTH WALL. THE NORTH EXTENSION SHALL HAVE A 1' FLARE TO LINE UP THE NORTH WALL FACE (SEE FILLET DETAIL).

* MAX ROADWAY FILL SLOPES SHOWN MEASURED NORMAL TO ℄ SURVEY

** FIELD VERIFY DIMENSION

*** MATCH ADJACENT WINGWALL FOOTING DEPTH

**** BEVEL INLET OF EXISTING CULVERT 6" WITH 1.5:1 SLOPE. CARE SHALL BE TAKEN NOT TO DAMAGE EXISTING CULVERT OR DROP DEBRIS INTO STREAM WHILE CREATING BEVEL. BASED ON AVAILABLE INFORMATION THE EXISTING CULVERT IS UNREINFORCED. IF REINFORCING IS ENCOUNTERED, CONTACT ENGINEER IMMEDIATELY.

Kimley»Horn
© 2016 KIMLEY-HORN AND ASSOCIATES, INC.
421 Fayetteville Street, Suite 600
Raleigh, NC 27601-1772
Phone (919) 677-2000

NORTH CAROLINA PROFESSIONAL SEAL 040384 ENGINEER JEFFREY C. WILSON
DocuSigned by: Jeffrey C. Wilson 10/6/2017

PROJ. REFERENCE NO. 44367.3.2

NO.	DATE	REVISIONS

CLIENT: NORTH CAROLINA DEPARTMENT OF TRANSPORTATION

PROJECT: U - 5804B SOUTH TRADE STREET ROADWAY IMPROVEMENTS COUNTY: MECKLENBURG STATION: 102+51.83 -L1-

TITLE: ARCH CULVERT SECTIONS CULVERT PLANS SOUTH TRADE STREET

DESIGNED BY:	CTP
DRAWN BY:	JJD
CHECKED BY:	JCW
DATE:	04/06/2017
PROJECT#:	015484010

S-3

DOCUMENT NOT CONSIDERED FINAL UNLESS ALL SIGNATURES COMPLETED

Drawing name: K:\RDT_Structures_Culvert\NC\015484006 Trade Str Culvert\Cad\Dwg\S3_Arch_Typ.dwg Layout 22 x 34 Apr 06, 2017 1:49pm by: james.debrow

THIS DOCUMENT, TOGETHER WITH THE CONCEPTS AND DESIGNS PRESENTED HEREIN, AS AN INSTRUMENT OF SERVICE, IS INTENDED ONLY FOR THE SPECIFIC PURPOSE AND CLIENT FOR WHICH IT WAS PREPARED. REUSE OF AND IMPROPER RELIANCE ON THIS DOCUMENT WITHOUT WRITTEN AUTHORIZATION AND ADAPTATION BY KIMLEY-HORN AND ASSOCIATES, INC. SHALL BE WITHOUT LIABILITY TO KIMLEY-HORN AND ASSOCIATES, INC.

DocuSign Envelope ID: 8697D079-08D7-4A9A-92F0-A5C74B784302

NOTES:

* MAX ROADWAY FILL SLOPES SHOWN MEASURED NORMAL TO ℄ SURVEY

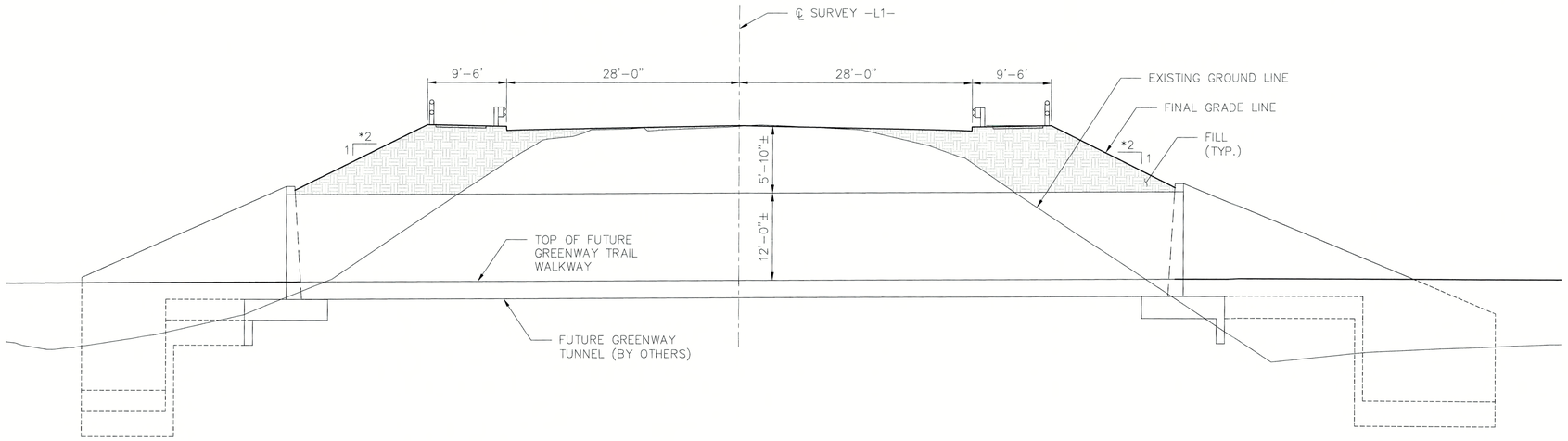

ELEVATION ALONG ℄ GREENWAY TRAIL TUNNEL

SCALE: 1/8" = 1'-0"

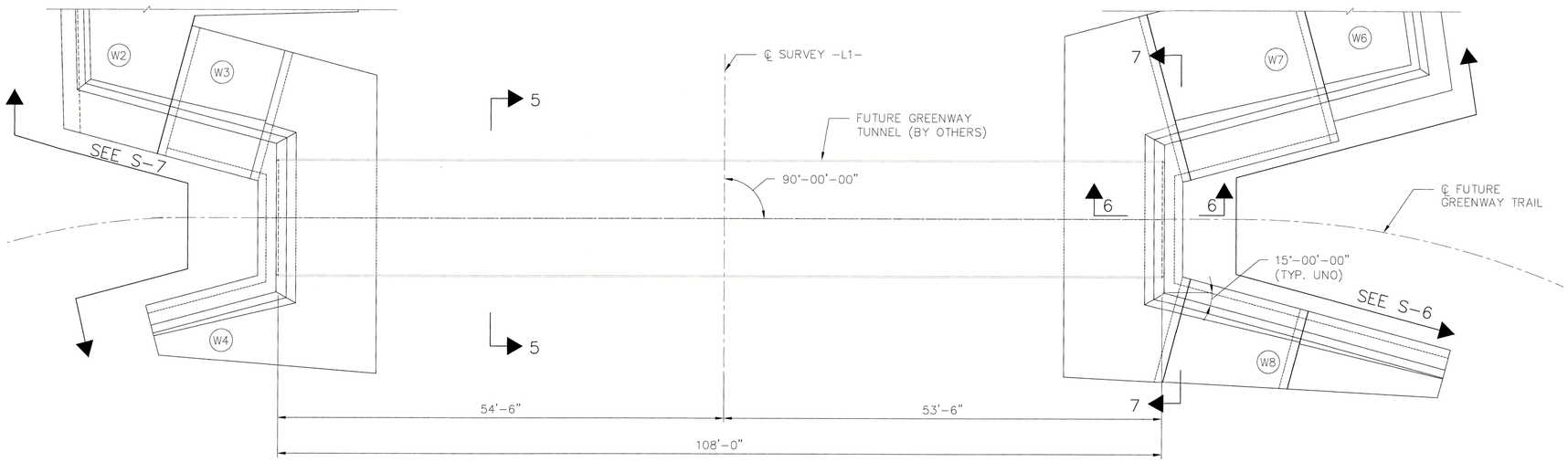

NOTES:

FOR SECTIONS 5-5, 6-6, AND 7-7 SEE SHEET S-5.

PLAN GREENWAY TRAIL TUNNEL

SCALE: 1/8" = 1'-0"

DOCUMENT NOT CONSIDERED FINAL UNLESS ALL SIGNATURES COMPLETED

Kimley»Horn
© 2016 KIMLEY-HORN AND ASSOCIATES, INC.
421 Fayetteville Street, Suite 600
Raleigh, NC 27601-1772
Phone (919) 677-2000

NORTH CAROLINA PROFESSIONAL SEAL 040384 ENGINEER JEFFREY C. WILSON

DocuSigned by: Jeffrey C. Wilson 4/6/2017

PROJ. REFERENCE NO. 44367.3.2

PROJ. REFERENCE NO.

NO.	DATE	REVISIONS

CLIENT: STATE OF NORTH CAROLINA • DEPARTMENT OF TRANSPORTATION

PROJECT: U - 5804B SOUTH TRADE STREET ROADWAY IMPROVEMENTS

COUNTY: MECKLENBURG
STATION: 102+51.83 -L1-

TITLE: PEDESTRIAN TUNNEL PLAN & ELEVATION

CULVERT PLANS SOUTH TRADE STREET

DESIGNED BY:	CTP
DRAWN BY:	JJD
CHECKED BY:	JCW
DATE:	04/06/2017
PROJECT#:	015484010

S-4

Drawing name: K:\RDT_Structures_Culvert\NC\015484006 Trade Str Culvert\Cad\Dwg\S4_PED_PE.dwg Layout 22 x 34 Apr 06, 2017 1:49pm by: james.debrow

THIS DOCUMENT, TOGETHER WITH THE CONCEPTS AND DESIGNS PRESENTED HEREIN, AS AN INSTRUMENT OF SERVICE, IS INTENDED ONLY FOR THE SPECIFIC PURPOSE AND CLIENT FOR WHICH IT WAS PREPARED. REUSE OF AND IMPROPER RELIANCE ON THIS DOCUMENT WITHOUT WRITTEN AUTHORIZATION AND ADAPTATION BY KIMLEY-HORN AND ASSOCIATES, INC. SHALL BE WITHOUT LIABILITY TO KIMLEY-HORN AND ASSOCIATES, INC.

DocuSign Envelope ID: 8697D079-08D7-4A9A-92F0-A5C74B784302

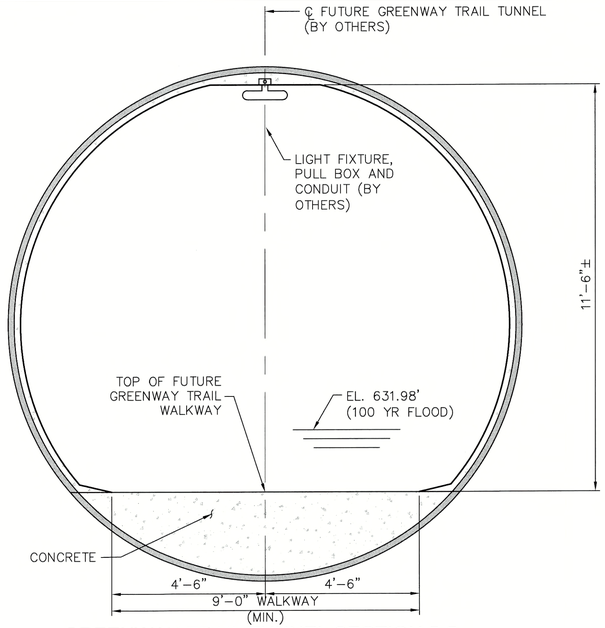

NOTES:

SECTION CUT REFERENCED ON SHEET S-4.

SECTION IS FOR INFORMATION ONLY.

GREENWAY TRAIL TUNNEL SECTION 5-5

SCALE: 1/2" = 1'-0"

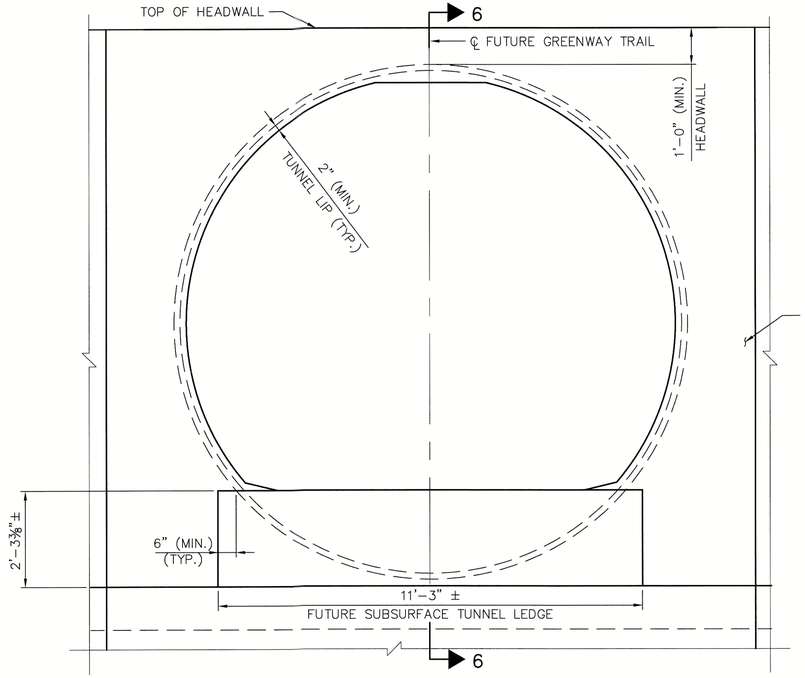

NOTES:

SECTION CUT REFERENCED ON SHEET S-4.

INLET SHOWN, OUTLET SIMILAR.

FOR TEMPORARY TUNNEL DETAILS SEE SHEET S-16.

GREENWAY TRAIL TUNNEL INLET VIEW 7-7

SCALE: 1/2" = 1'-0"

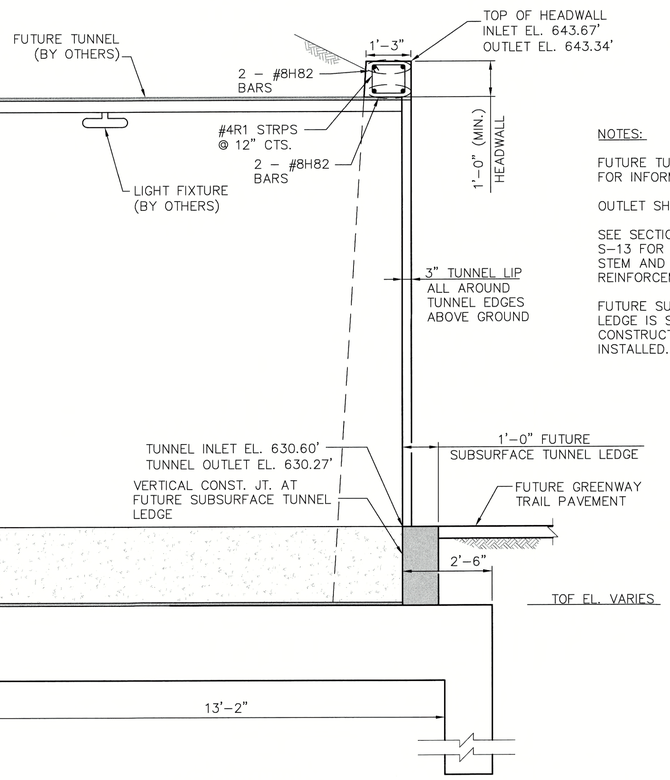

NOTES:

FUTURE TUNNEL SECTION SHOWN FOR INFORMATION ONLY.

OUTLET SHOWN, INLET SIMILAR

SEE SECTION J-J ON SHEET S-13 FOR TUNNEL HEADWALL STEM AND FOUNDATION REINFORCEMENT.

FUTURE SUBSURFACE TUNNEL LEDGE IS SHOWN, BUT NOT CONSTRUCTED UNTIL TUNNEL IS INSTALLED.

SECTION 6-6

SCALE: 1/2" = 1'-0"

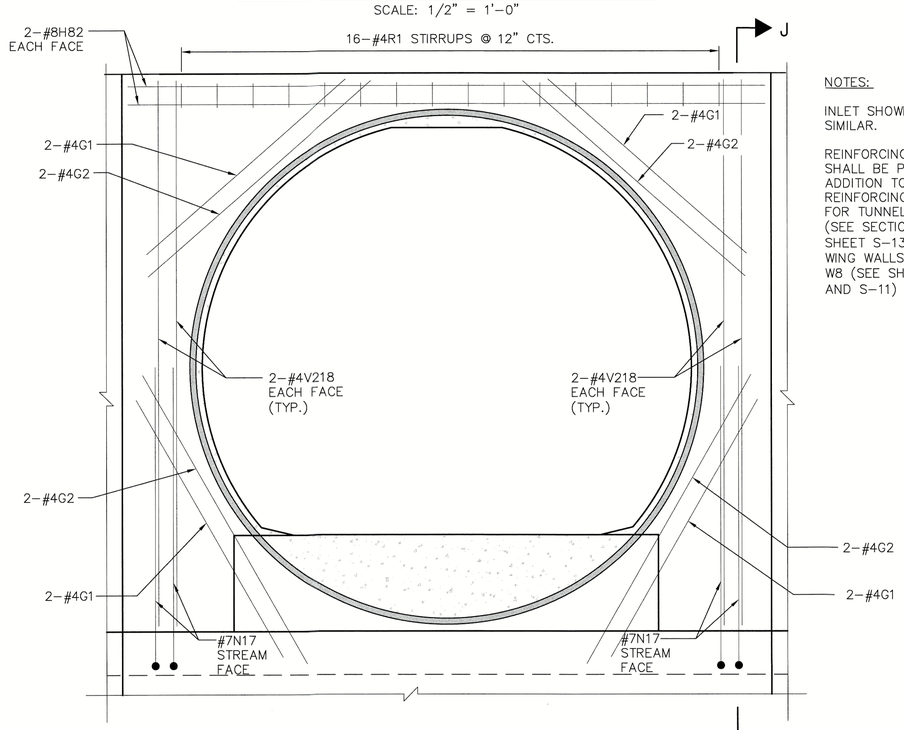

NOTES:

INLET SHOWN, OUTLET SIMILAR.

REINFORCING SHOWN SHALL BE PROVIDED IN ADDITION TO TYPICAL REINFORCING SHOWN FOR TUNNEL HEADWALL (SEE SECTION J-J SHEET S-13) AND WING WALLS W4, W7, W8 (SEE SHEETS S-9 AND S-11)

GREENWAY TRAIL TUNNEL REINFORCING

(TYPICAL INLET AND OUTLET)

SCALE: 1/2" = 1'-0"

DOCUMENT NOT CONSIDERED FINAL UNLESS ALL SIGNATURES COMPLETED

Kimley»Horn
© 2016 KIMLEY-HORN AND ASSOCIATES, INC.
421 Fayetteville Street, Suite 600
Raleigh, NC 27601-1772
Phone (919) 677-2000

NORTH CAROLINA PROFESSIONAL SEAL 040384 ENGINEER JEFFREY C. WILSON

DocuSigned by: Jeffrey C. Wilson 04/6/2017

PROJ. REFERENCE NO. 44367.3.2

NO.	DATE	REVISIONS

CLIENT: NORTH CAROLINA DEPARTMENT OF TRANSPORTATION

PROJECT: U - 5804B SOUTH TRADE STREET ROADWAY IMPROVEMENTS
COUNTY: MECKLENBURG
STATION: 102+51.83 -L1-

TITLE: PEDESTRIAN TUNNEL SECTIONS
CULVERT PLANS
SOUTH TRADE STREET

DESIGNED BY:	CTP
DRAWN BY:	JJD
CHECKED BY:	JCW
DATE:	04/06/2017
PROJECT#:	015484010

S-5

Drawing name: K:\RDT_Structures_Culvert\NC\015484006 Trade Str Culvert\Cad\Dwg\S5_Ped_Typ.dwg Layout 22 x 34 Apr 06, 2017 1:49pm by: james.debrow

THIS DOCUMENT, TOGETHER WITH THE CONCEPTS AND DESIGNS PRESENTED HEREIN, AS AN INSTRUMENT OF SERVICE, IS INTENDED ONLY FOR THE SPECIFIC PURPOSE AND CLIENT FOR WHICH IT WAS PREPARED. REUSE OF AND IMPROPER RELIANCE ON THIS DOCUMENT WITHOUT WRITTEN AUTHORIZATION AND ADAPTATION BY KIMLEY-HORN AND ASSOCIATES, INC. SHALL BE WITHOUT LIABILITY TO KIMLEY-HORN AND ASSOCIATES, INC.

DocuSign Envelope ID: 8697D079-08D7-4A9A-92F0-A5C74B784302

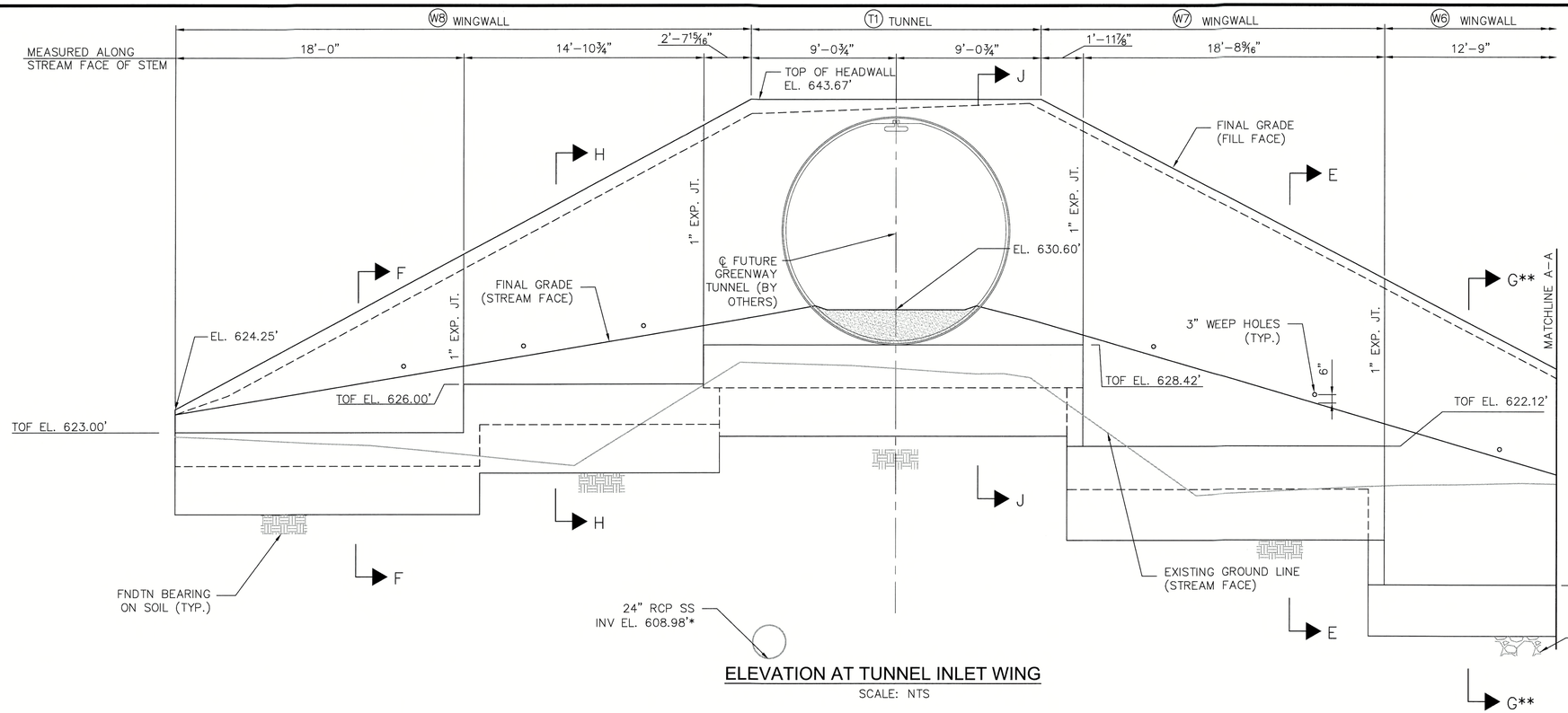

ELEVATION AT TUNNEL INLET WING

SCALE: NTS

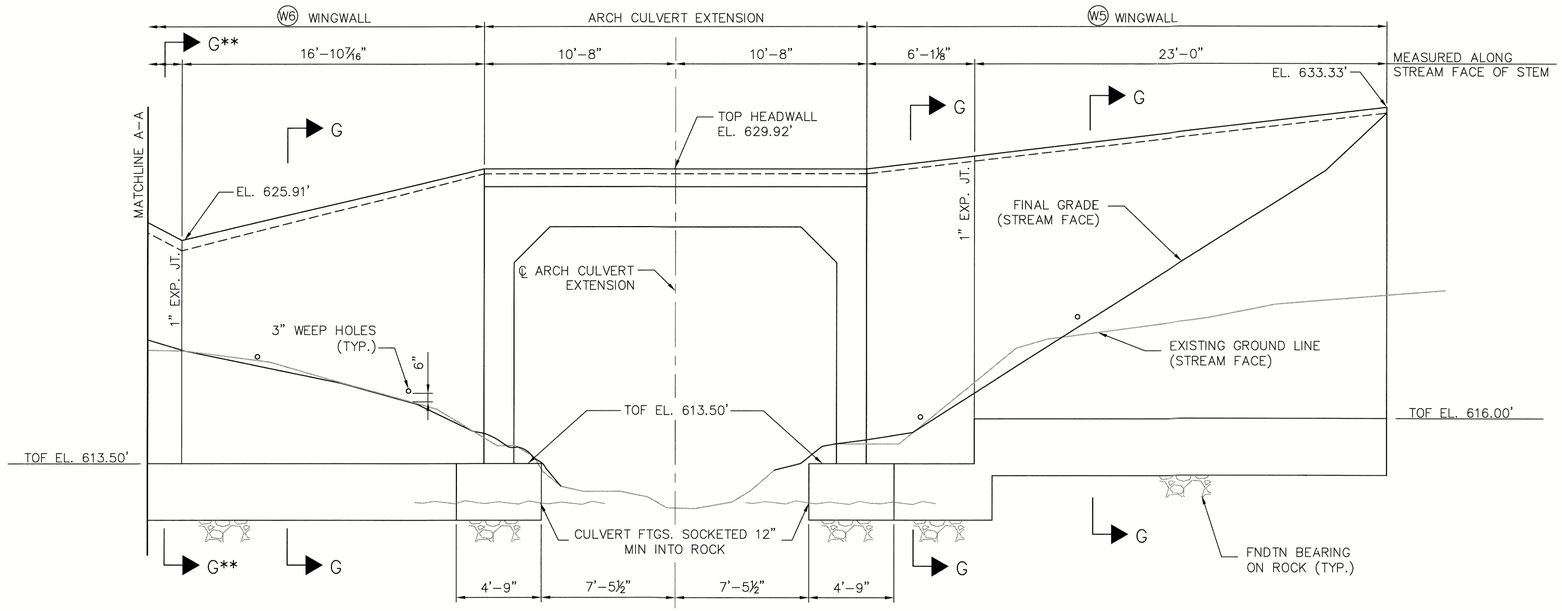

ELEVATION AT ARCH CULVERT EXTENSION INLET WINGS

SCALE: NTS

NOTES:

THE CONTRACTOR SHOULD NOTIFY THE ENGINEER IF ROCK IS NOT ENCOUNTERED 12 INCHES ABOVE BOTTOM OF FOOTING ELEVATION FOR FOUNDATIONS ASSUMED TO BEAR ON ROCK.

SECTIONS ARE CUT ALONG STREAM FACE OF WINGS.

* CONTRACTOR TO PROTECT UTILITIES DURING EXCAVATION, CONSTRUCTION, AND BACKFILLING OPERATIONS. IN THE EVENT OF DAMAGE TO THE UTILITY, CONTRACTOR WILL REPLACE DAMAGED UTILITY AT NO COST TO THE PROJECT. APPROXIMATE LOCATION OF UTILITY SHOWN FOR INFORMATION ONLY. REFERENCE CIVIL PLANS FOR MORE INFORMATION. FIELD VERIFY UTILITY LOCATIONS.

** "Z" BARS SHALL HAVE 3" OF CONCRETE COVER

Kimley»Horn
© 2016 KIMLEY-HORN AND ASSOCIATES, INC.
421 Fayetteville Street, Suite 600
Raleigh, NC 27601-1772
Phone (919) 677-2000

NORTH CAROLINA PROFESSIONAL SEAL 040384 ENGINEER JEFFREY C. WILSON

DocuSigned by: Jeffrey C. Wilson 4/6/2017

PROJ. REFERENCE NO. 44367.3.2

NO.	DATE	REVISIONS

CLIENT: NORTH CAROLINA DEPARTMENT OF TRANSPORTATION

PROJECT: U-5804B SOUTH TRADE STREET ROADWAY IMPROVEMENTS
COUNTY: MECKLENBURG
STATION: 102+51.83 -L1-

TITLE: INLET WING ELEVATION
CULVERT PLANS
SOUTH TRADE STREET

DESIGNED BY:	CTP
DRAWN BY:	JJD
CHECKED BY:	JCW
DATE:	04/06/2017
PROJECT#:	015484010

S-6

DOCUMENT NOT CONSIDERED FINAL UNLESS ALL SIGNATURES COMPLETED

Drawing name: K:\RDT_Structures_Culvert\NC\015484006 Trade Str Culvert\Cad\Dwg\S6_WING_INLET_EL.dwg Layout:22 x 34 Apr 06, 2017 1:49pm by:james.debrow

THIS DOCUMENT, TOGETHER WITH THE CONCEPTS AND DESIGNS PRESENTED HEREIN, AS AN INSTRUMENT OF SERVICE, IS INTENDED ONLY FOR THE SPECIFIC PURPOSE AND CLIENT FOR WHICH IT WAS PREPARED. REUSE OF AND IMPROPER RELIANCE ON THIS DOCUMENT WITHOUT WRITTEN AUTHORIZATION AND ADAPTATION BY KIMLEY-HORN AND ASSOCIATES, INC. SHALL BE WITHOUT LIABILITY TO KIMLEY-HORN AND ASSOCIATES, INC.

DocuSign Envelope ID: 869F0079-08D7-4ABA-92F0-A5C74B784302

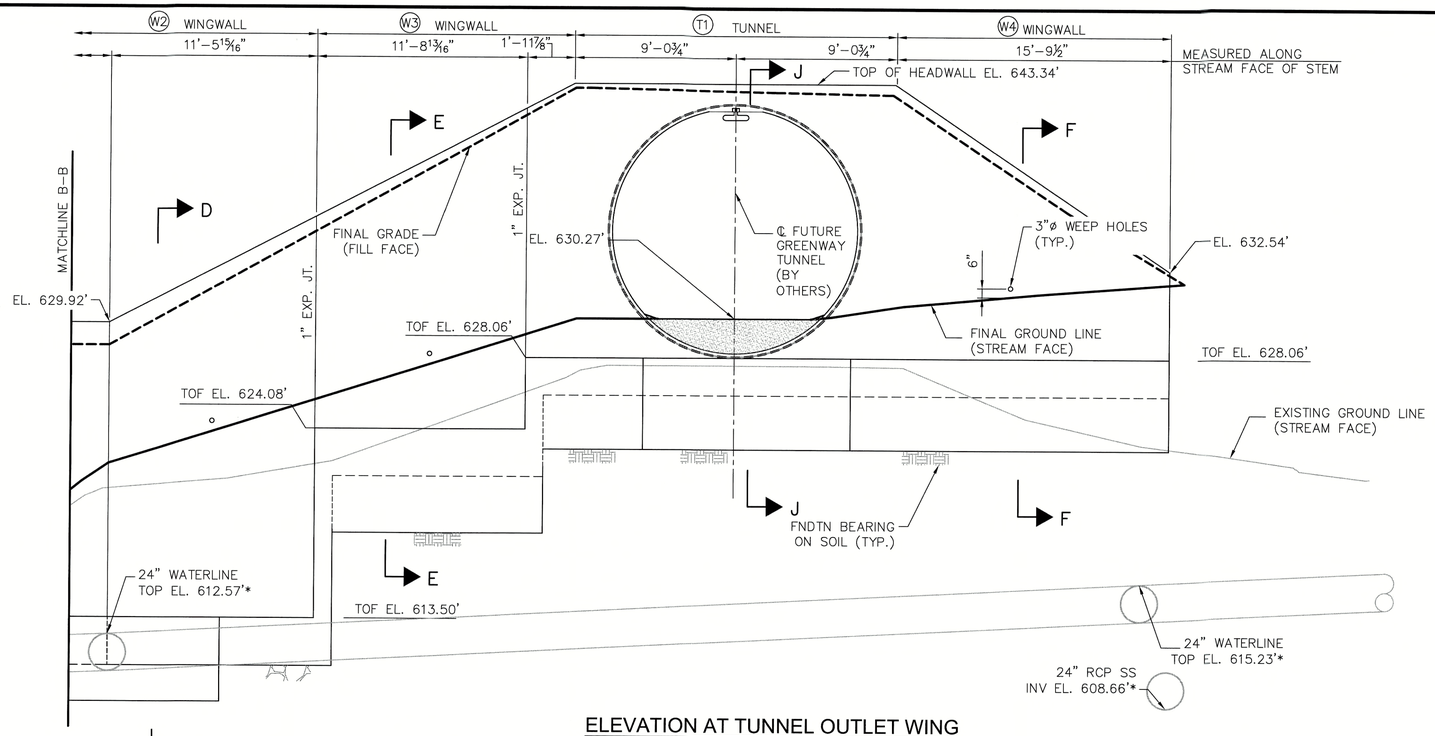

ELEVATION AT TUNNEL OUTLET WING

SCALE: NTS

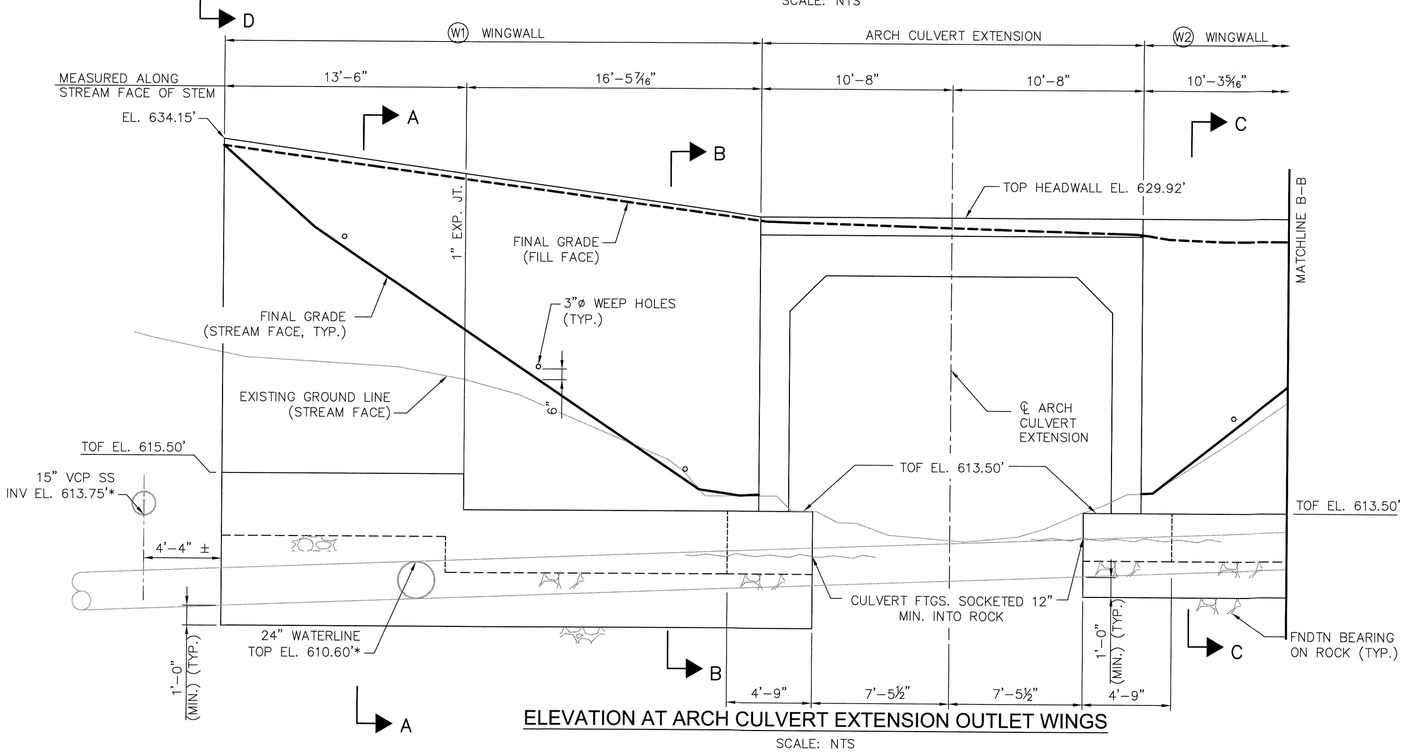

ELEVATION AT ARCH CULVERT EXTENSION OUTLET WINGS

SCALE: NTS

NOTES:

THE CONTRACTOR SHOULD NOTIFY THE ENGINEER IF ROCK IS NOT ENCOUNTERED 12 INCHES ABOVE BOTTOM OF FOOTING ELEVATION FOR FOUNDATIONS ASSUMED TO BEAR ON ROCK.

SECTIONS ARE CUT ALONG STREAM FACE OF WINGS.

* CONTRACTOR TO PROTECT UTILITIES DURING EXCAVATION, CONSTRUCTION, AND BACKFILLING OPERATIONS. IN THE EVENT OF DAMAGE TO THE UTILITY, CONTRACTOR WILL REPLACE DAMAGED UTILITY AT NO COST TO THE PROJECT. APPROXIMATE LOCATION OF UTILITY SHOWN FOR INFORMATION ONLY. REFERENCE CIVIL PLANS FOR MORE INFORMATION. FIELD VERIFY UTILITY LOCATIONS.

Kimley»Horn
© 2016 KIMLEY-HORN AND ASSOCIATES, INC.
421 Fayetteville Street, Suite 600
Raleigh, NC 27601-1772
Phone (919) 677-2000

NORTH CAROLINA PROFESSIONAL SEAL 040384 ENGINEER JEFFREY C. WILSON

DocuSigned by: Jeffrey C. Wilson 9/6/2017

PROJ. REFERENCE NO. 44367.3.2

NO.	DATE	REVISIONS

CLIENT: NORTH CAROLINA DEPARTMENT OF TRANSPORTATION

PROJECT: U - 5804B SOUTH TRADE STREET ROADWAY IMPROVEMENTS
COUNTY: MECKLENBURG
STATION: 102+51.83 -L1-

TITLE: OUTLET WING ELEVATIONS
CULVERT PLANS
SOUTH TRADE STREET

DESIGNED BY:	CTP
DRAWN BY:	JJD
CHECKED BY:	JCW
DATE:	04/06/2017
PROJECT#:	015484010

S-7

DOCUMENT NOT CONSIDERED FINAL UNLESS ALL SIGNATURES COMPLETED

Drawing name: K:\PDT_Structures_Culvert\NC\015484006 Trade Str Culvert\Cad\Dwg\S7_WING_OUTLET_EL.dwg Layout 22 x 34 Apr 06, 2017 1:50pm by: james.debrow

THIS DOCUMENT, TOGETHER WITH THE CONCEPTS AND DESIGNS PRESENTED HEREIN, AS AN INSTRUMENT OF SERVICE, IS INTENDED ONLY FOR THE SPECIFIC PURPOSE AND CLIENT FOR WHICH IT WAS PREPARED. REUSE OF AND IMPROPER RELIANCE ON THIS DOCUMENT WITHOUT WRITTEN AUTHORIZATION AND ADAPTATION BY KIMLEY-HORN AND ASSOCIATES, INC. SHALL BE WITHOUT LIABILITY TO KIMLEY-HORN AND ASSOCIATES, INC.

DocuSign Envelope ID: 8697D079-08D7-4A9A-92F0-A5C74B784302

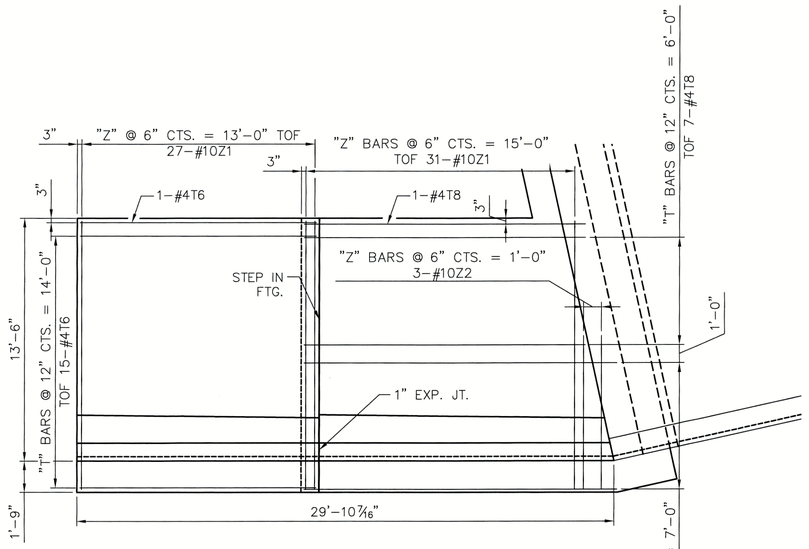

PLAN (W1)

SCALE: ¼" = 1'-0"

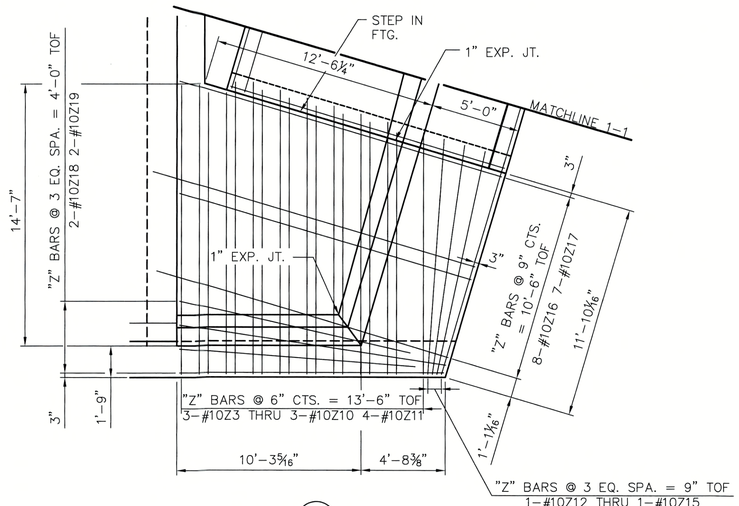

PLAN (W2)

SCALE: ¼" = 1'-0"

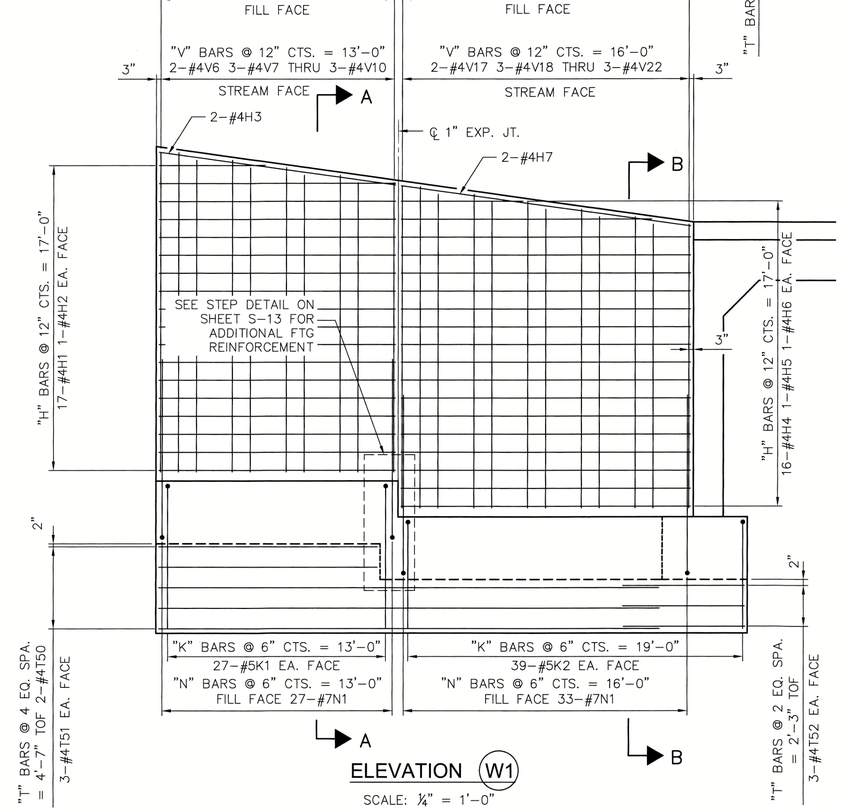

ELEVATION (W1)

SCALE: ¼" = 1'-0"

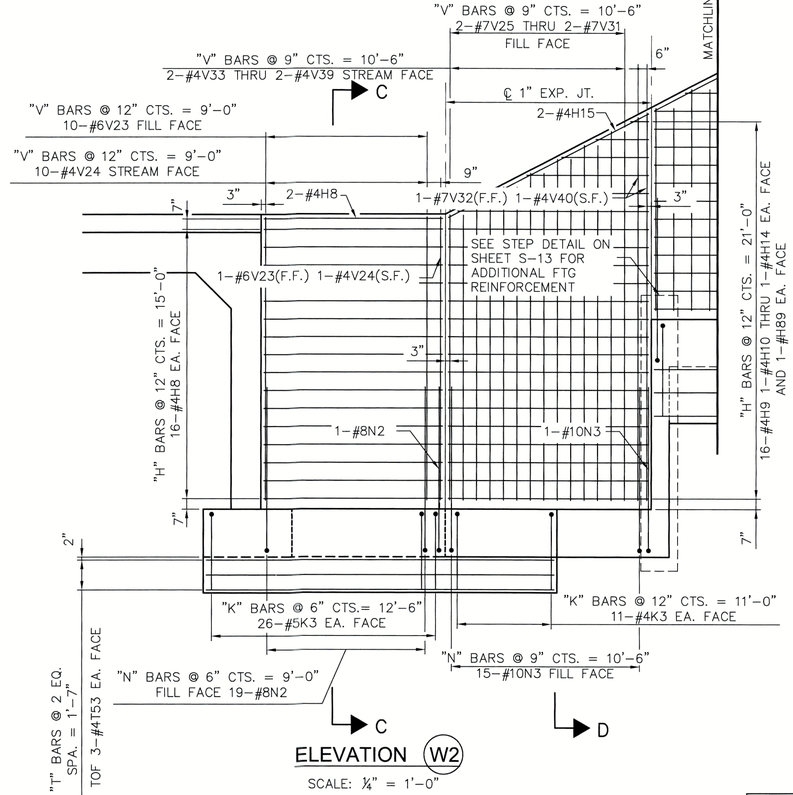

ELEVATION (W2)

SCALE: ¼" = 1'-0"

DOCUMENT NOT CONSIDERED FINAL UNLESS ALL SIGNATURES COMPLETED

THIS DOCUMENT, TOGETHER WITH THE CONCEPTS AND DESIGNS PRESENTED HEREIN, AS AN INSTRUMENT OF SERVICE, IS INTENDED ONLY FOR THE SPECIFIC PURPOSE AND CLIENT FOR WHICH IT WAS PREPARED. REUSE OF AND IMPROPER RELIANCE ON THIS DOCUMENT WITHOUT WRITTEN AUTHORIZATION AND ADAPTATION BY KIMLEY-HORN AND ASSOCIATES, INC. SHALL BE WITHOUT LIABILITY TO KIMLEY-HORN AND ASSOCIATES, INC.

Kimley»Horn
© 2016 KIMLEY-HORN AND ASSOCIATES, INC.
421 Fayetteville Street, Suite 600
Raleigh, NC 27601-1772
Phone (919) 677-2000

NORTH CAROLINA PROFESSIONAL SEAL 040384 ENGINEER JEFFREY C. WILSON

DocuSigned by: Jeffrey C. Wilson 4/6/2017

PROJ. REFERENCE NO.
44367.3.2

NO.	DATE	REVISIONS

CLIENT: NORTH CAROLINA DEPARTMENT OF TRANSPORTATION

PROJECT:
U - 5804B
SOUTH TRADE STREET
ROADWAY IMPROVEMENTS
COUNTY: MECKLENBURG
STATION: 102+51.83 -L1-

TITLE:
OUTLET WING REINFORCING
AT ARCH CULVERT
CULVERT PLANS
SOUTH TRADE STREET

DESIGNED BY:	CTP
DRAWN BY:	JJD
CHECKED BY:	JCW
DATE:	04/06/2017
PROJECT#:	015484010

S-8

Drawing name: K:\RDT_Structures_Culvert\NC\015484006 Trade Str Culvert\CadD\wg\S8_WING_OUTLET_culvert_W1-2.dwg Layout 22 x 34 Apr 06, 2017 1:50pm by: james.debrow

DocuSign Envelope ID: 8697D079-08D7-4A9A-92F0-A5C74B784302

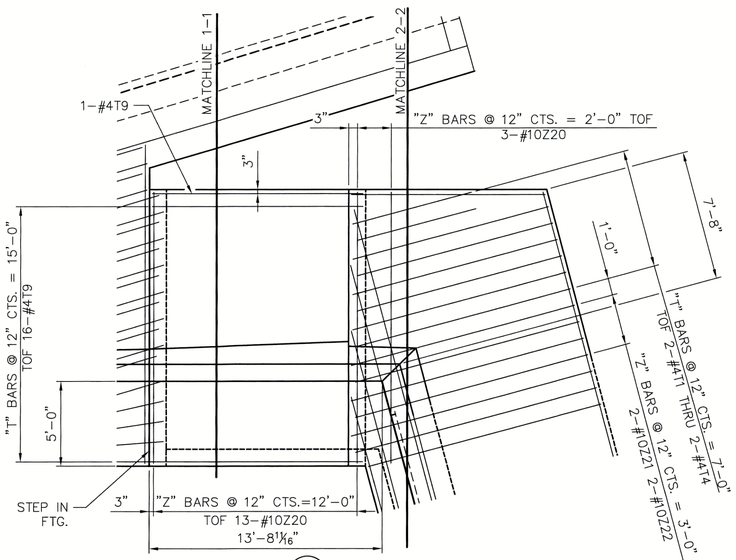

PLAN (W3)

SCALE: 1/4" = 1'–0"

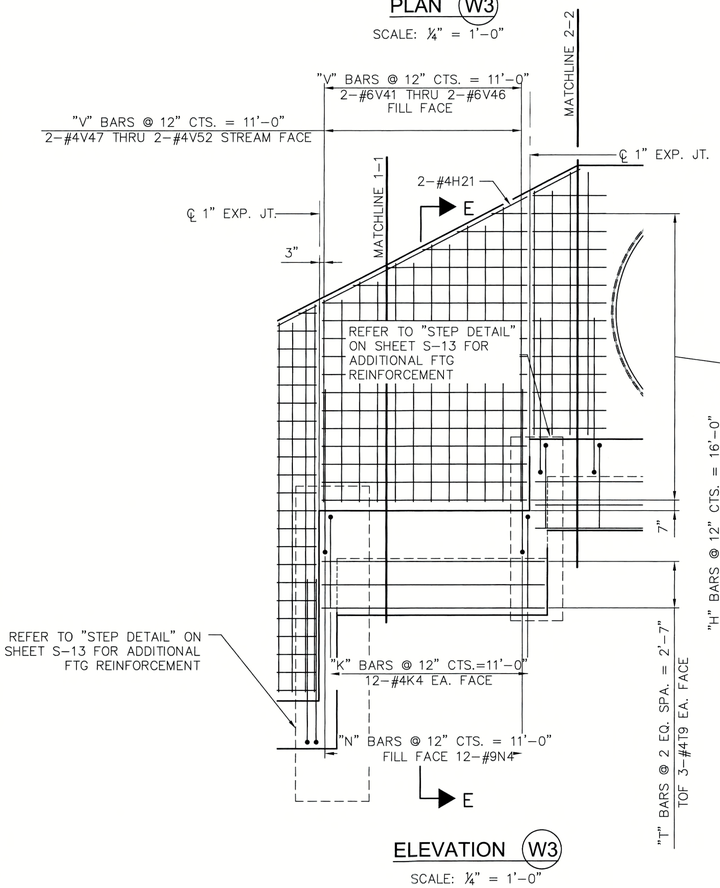

ELEVATION (W3)

SCALE: 1/4" = 1'–0"

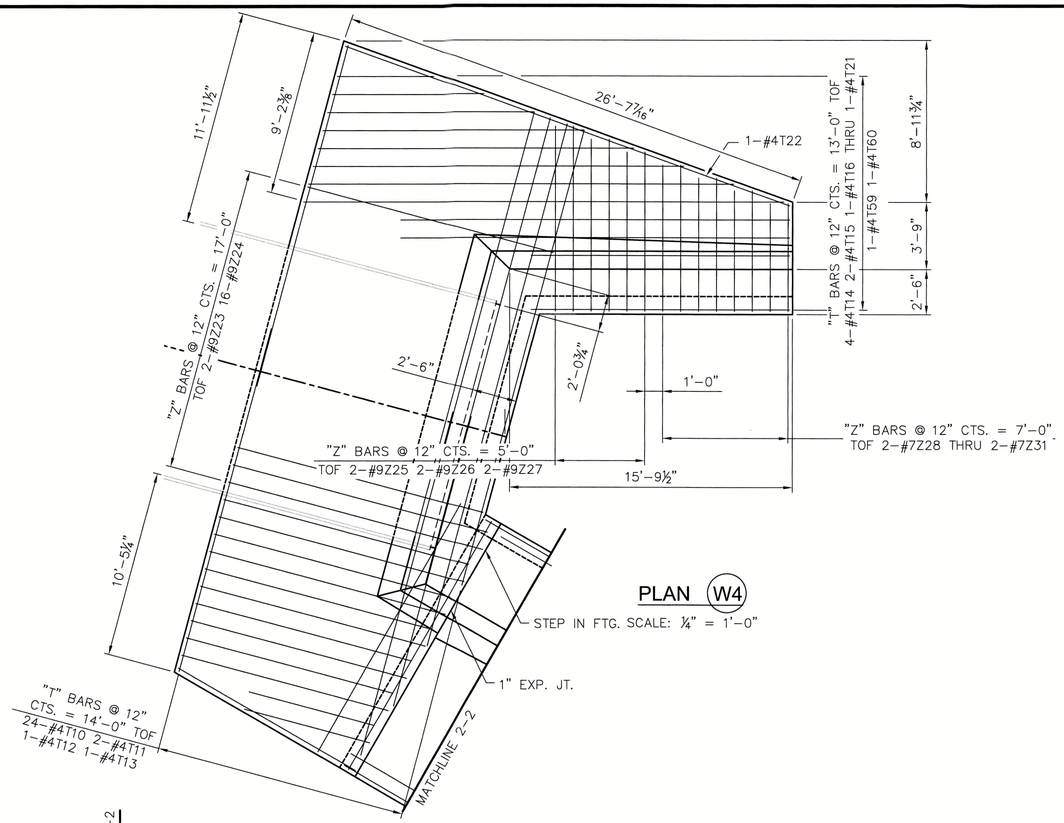

PLAN (W4)

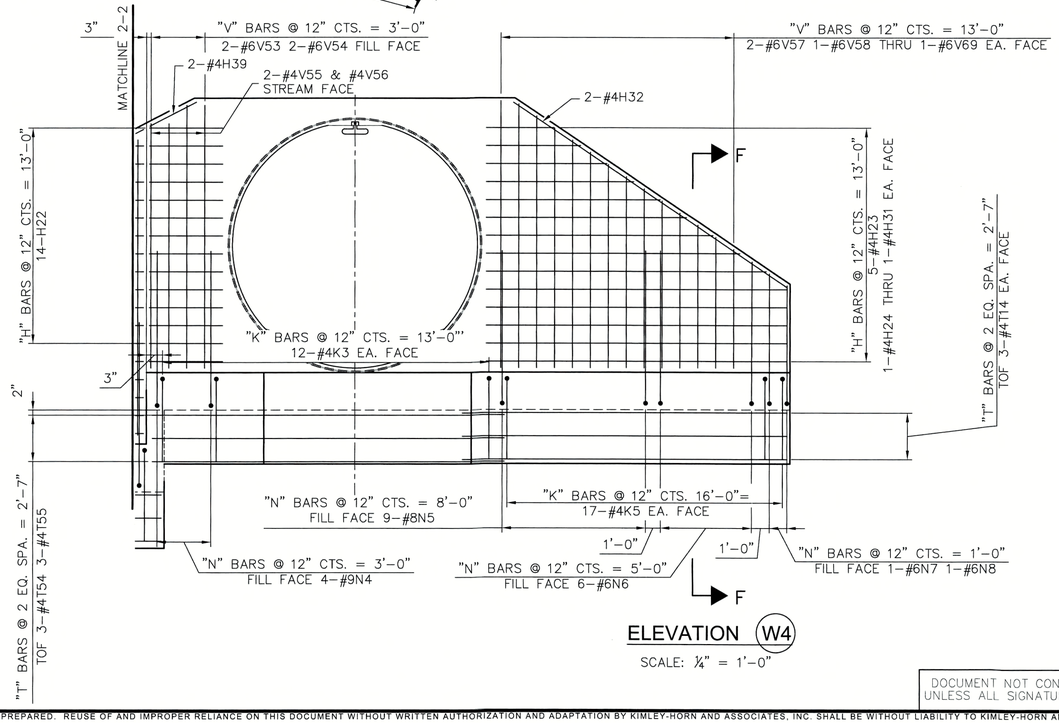

ELEVATION (W4)

SCALE: 1/4" = 1'–0"

DOCUMENT NOT CONSIDERED FINAL UNLESS ALL SIGNATURES COMPLETED

THIS DOCUMENT, TOGETHER WITH THE CONCEPTS AND DESIGNS PRESENTED HEREIN, AS AN INSTRUMENT OF SERVICE, IS INTENDED ONLY FOR THE SPECIFIC PURPOSE AND CLIENT FOR WHICH IT WAS PREPARED. REUSE OF AND IMPROPER RELIANCE ON THIS DOCUMENT WITHOUT WRITTEN AUTHORIZATION AND ADAPTATION BY KIMLEY-HORN AND ASSOCIATES, INC. SHALL BE WITHOUT LIABILITY TO KIMLEY-HORN AND ASSOCIATES, INC.

Kimley»Horn
© 2016 KIMLEY-HORN AND ASSOCIATES, INC.
421 Fayetteville Street, Suite 600
Raleigh, NC 27601-1772
Phone (919) 677-2000

NORTH CAROLINA PROFESSIONAL SEAL 040384 ENGINEER JEFFREY C. WILSON

DocuSigned by: Jeffrey C. Wilson 9/6/2017

PROJ. REFERENCE NO. 44367.3.2

NO.	DATE	REVISIONS

CLIENT: NORTH CAROLINA DEPARTMENT OF TRANSPORTATION

PROJECT: U - 5804B SOUTH TRADE STREET ROADWAY IMPROVEMENTS
COUNTY: MECKLENBURG
STATION: 102+51.83 -L1-

TITLE: OUTLET WING REINFORCING AT ARCH CULVERT
CULVERT PLANS
SOUTH TRADE STREET

DESIGNED BY:	CTP
DRAWN BY:	JJD
CHECKED BY:	JCW
DATE:	04/06/2017
PROJECT#:	015484010

S-9

Drawing name: K:\RDT_Structures_Culvert\NC\015484006 Trade Str Culvert\Cadd\Dwg\S9_WING_OUTLET_TUNNEL_W3-4.dwg Layout 22 x 34 Apr 06, 2017 1:51pm by: james.debrow

DocuSign Envelope ID: 8697D079-08D7-4A9A-92F0-A5C74B784302

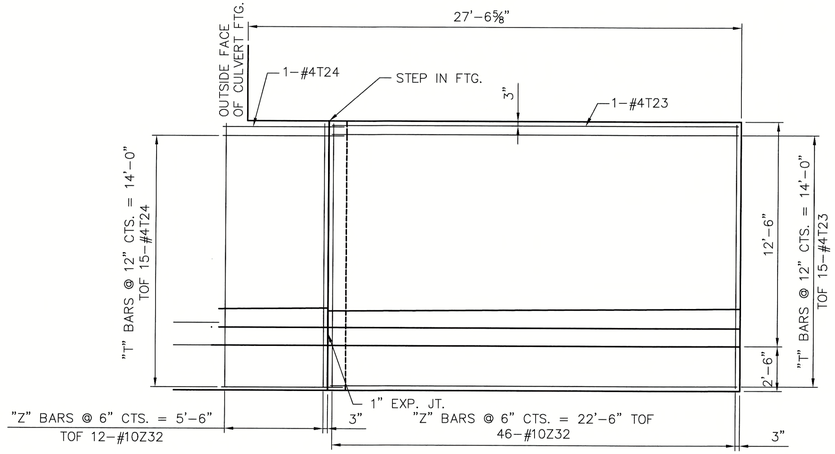

PLAN W5

SCALE: ¼" = 1'-0"

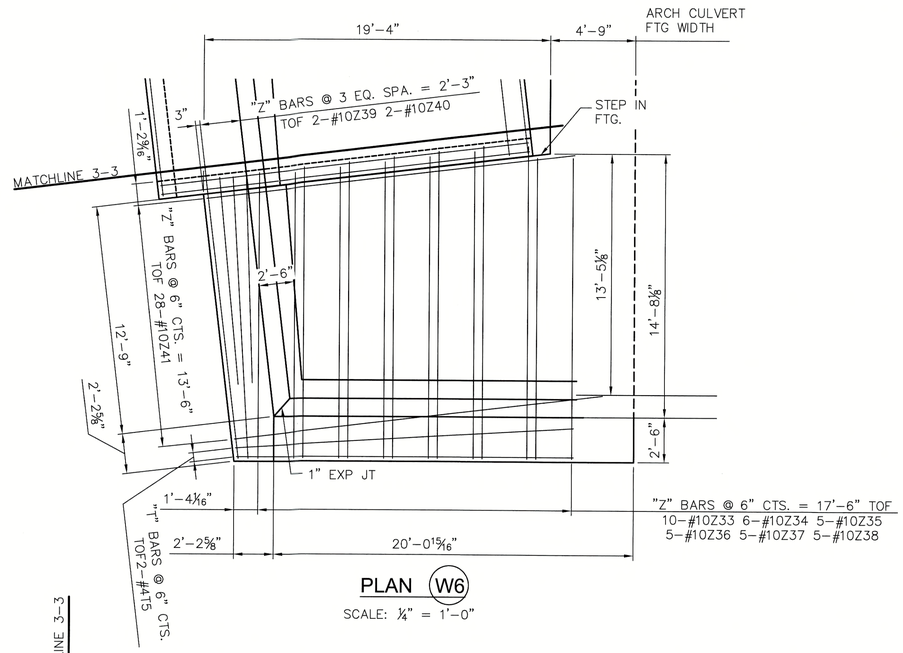

PLAN W6

SCALE: ¼" = 1'-0"

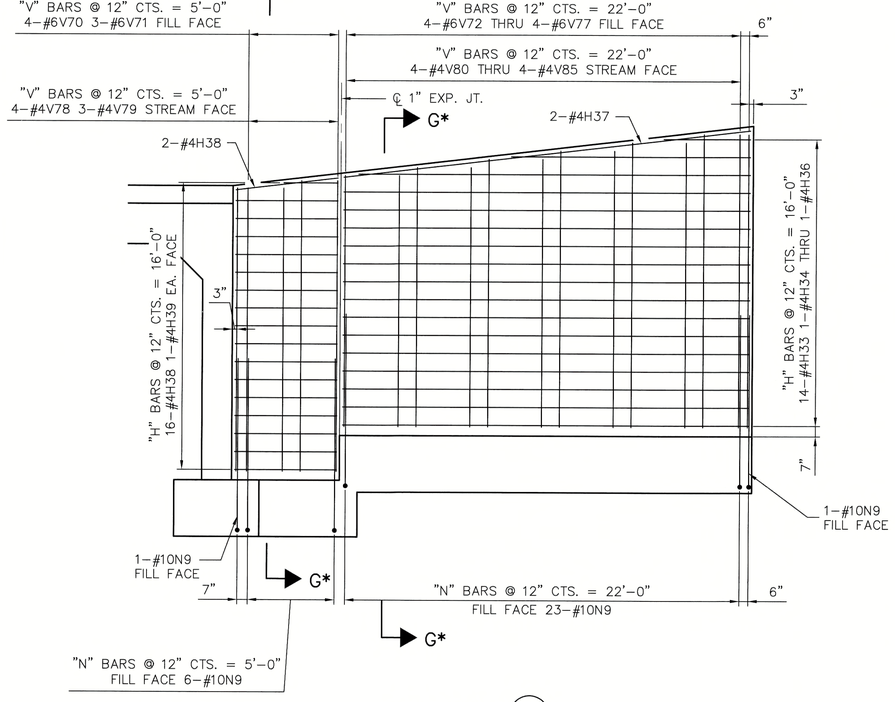

ELEVATION W5

SCALE: ¼" = 1'-0"

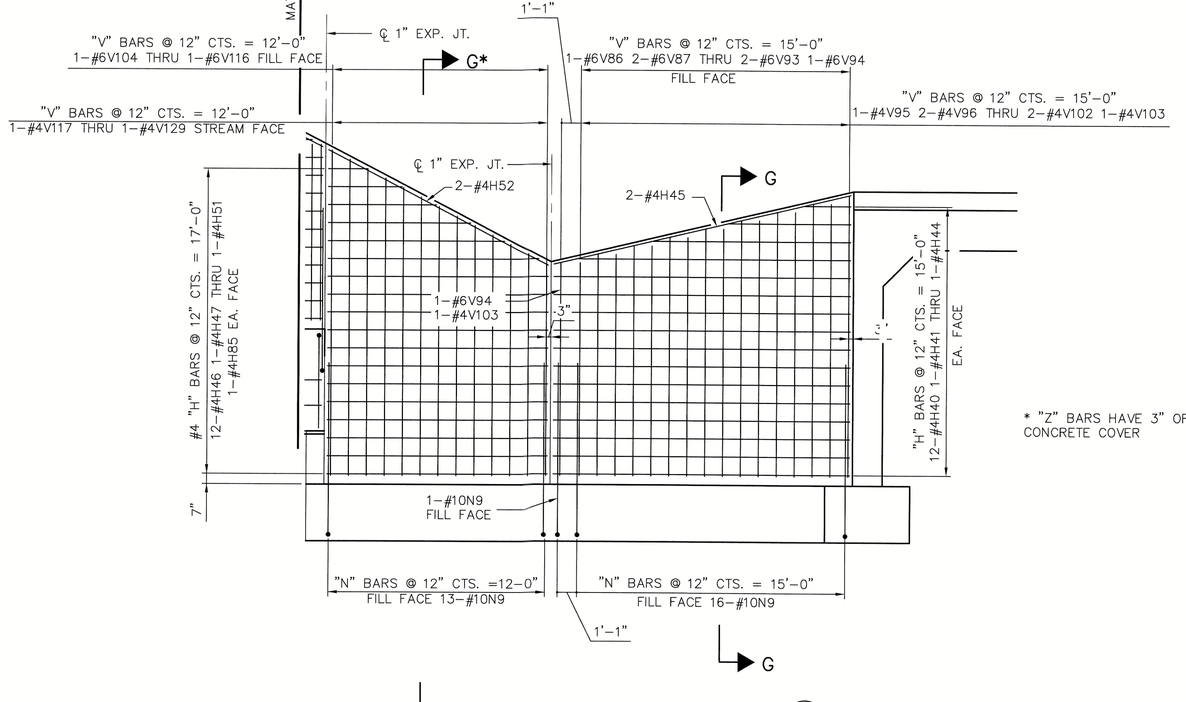

ELEVATION W6

SCALE: ¼" = 1'-0"

* "Z" BARS HAVE 3" OF CONCRETE COVER

DOCUMENT NOT CONSIDERED FINAL UNLESS ALL SIGNATURES COMPLETED

Kimley»Horn
© 2016 KIMLEY-HORN AND ASSOCIATES, INC.
421 Fayetteville Street, Suite 600
Raleigh, NC 27601-1772
Phone (919) 677-2000

NORTH CAROLINA PROFESSIONAL SEAL 040384 ENGINEER JEFFREY C. WILSON

DocuSigned by: Jeffrey C. Wilson 9/6/2017

CANADA ASSOCIATE

PROJ. REFERENCE NO. 44367.3.2

NO.	DATE	REVISIONS

CLIENT: NORTH CAROLINA DEPARTMENT OF TRANSPORTATION

PROJECT: U - 5804B SOUTH TRADE STREET ROADWAY IMPROVEMENTS

COUNTY: MECKLENBURG
STATION: 102+51.83 -L1-

TITLE: INLET WING REINFORCING AT ARCH CULVERT
CULVERT PLANS
SOUTH TRADE STREET

DESIGNED BY:	CTP
DRAWN BY:	JJD
CHECKED BY:	JCW
DATE:	04/06/2017
PROJECT#:	015484010

S-10

Drawing name: K:\RDT_Structures_Culvert\NC\015484006 Trade Str Culvert\Cad\Dwg\S10_WING_INLET_culvert_W5-6.dwg Layout 22 x 34 Apr 06, 2017 1:51pm by: james.debrow

THIS DOCUMENT, TOGETHER WITH THE CONCEPTS AND DESIGNS PRESENTED HEREIN, AS AN INSTRUMENT OF SERVICE, IS INTENDED ONLY FOR THE SPECIFIC PURPOSE AND CLIENT FOR WHICH IT WAS PREPARED. REUSE OF AND IMPROPER RELIANCE ON THIS DOCUMENT WITHOUT WRITTEN AUTHORIZATION AND ADAPTATION BY KIMLEY-HORN AND ASSOCIATES, INC. SHALL BE WITHOUT LIABILITY TO KIMLEY-HORN AND ASSOCIATES, INC.

DocuSign Envelope ID: 8697D079-08D7-4A9A-92F0-A5C74B784302

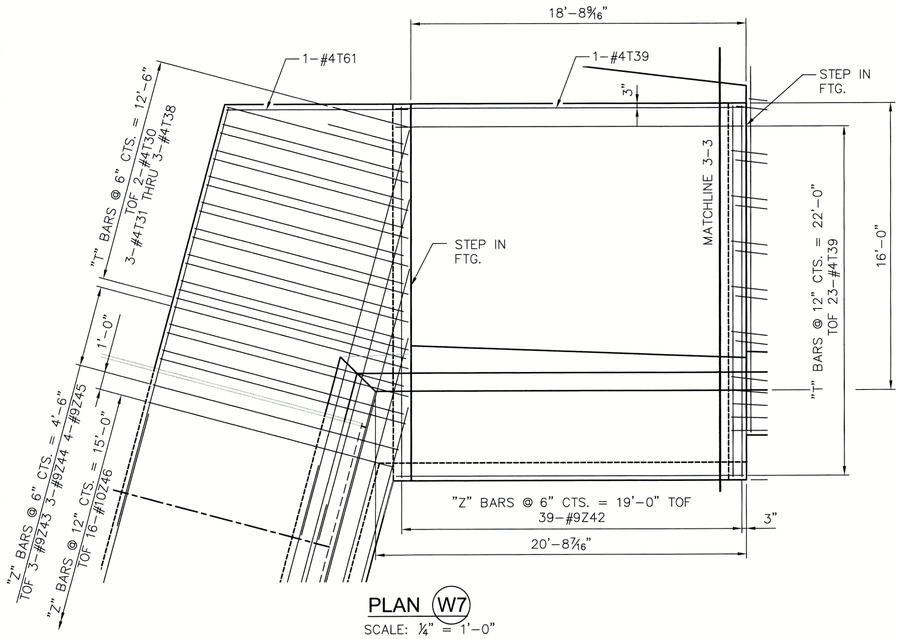

PLAN (W7)
SCALE: 1/4" = 1'-0"

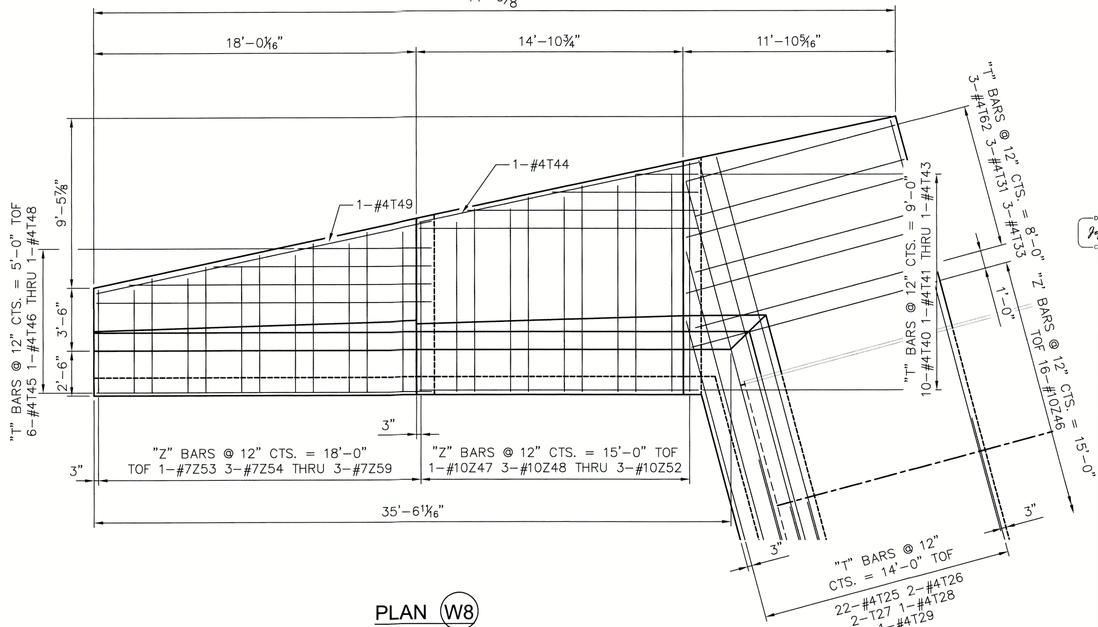

PLAN (W8)
SCALE: 1/4" = 1'-0"

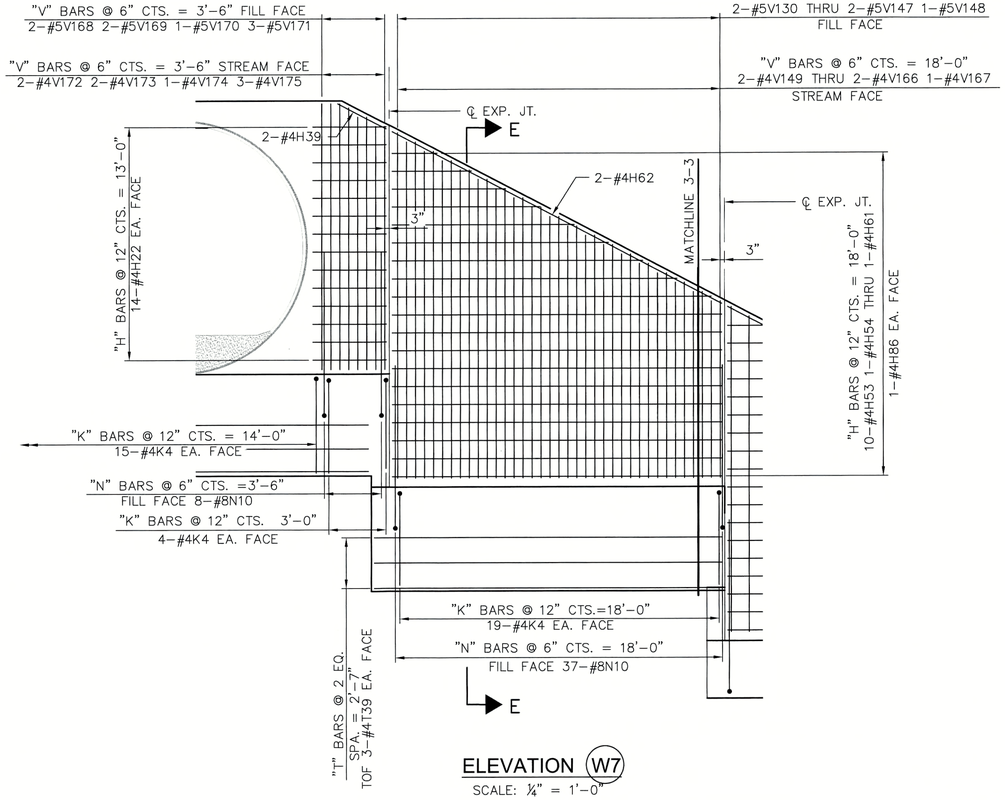

ELEVATION (W7)
SCALE: 1/4" = 1'-0"

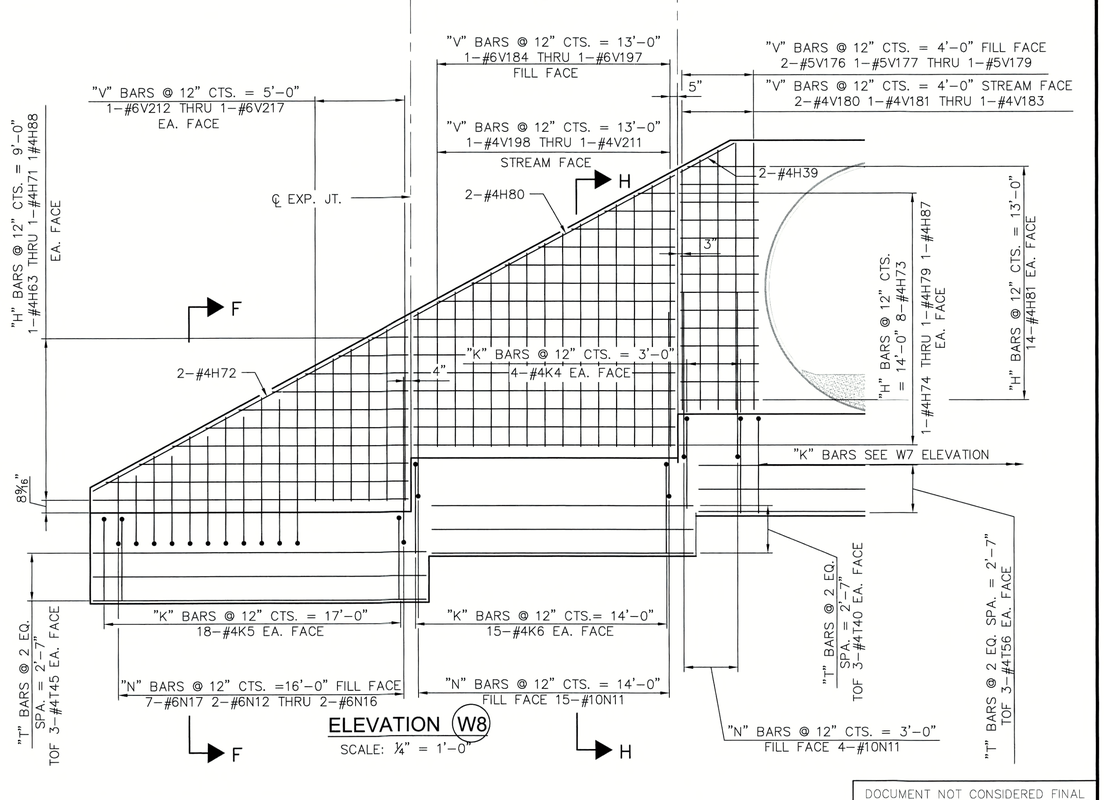

ELEVATION (W8)
SCALE: 1/4" = 1'-0"

DOCUMENT NOT CONSIDERED FINAL UNLESS ALL SIGNATURES COMPLETED

THIS DOCUMENT, TOGETHER WITH THE CONCEPTS AND DESIGNS PRESENTED HEREIN, AS AN INSTRUMENT OF SERVICE, IS INTENDED ONLY FOR THE SPECIFIC PURPOSE AND CLIENT FOR WHICH IT WAS PREPARED. REUSE OF AND IMPROPER RELIANCE ON THIS DOCUMENT WITHOUT WRITTEN AUTHORIZATION AND ADAPTATION BY KIMLEY-HORN AND ASSOCIATES, INC. SHALL BE WITHOUT LIABILITY TO KIMLEY-HORN AND ASSOCIATES, INC.

Kimley»Horn
© 2016 KIMLEY-HORN AND ASSOCIATES, INC.
421 Fayetteville Street, Suite 600
Raleigh, NC 27601-1772
Phone (919) 677-2000

NORTH CAROLINA PROFESSIONAL SEAL 040384 ENGINEER JEFFREY C. WILSON

DocuSigned by: Jeffrey C. Wilson 4/6/2017

PROJ. REFERENCE NO. 44367.3.2

NO.	DATE	REVISIONS

CLIENT: NORTH CAROLINA DEPARTMENT OF TRANSPORTATION

PROJECT: U - 5804B SOUTH TRADE STREET ROADWAY IMPROVEMENTS — COUNTY: MECKLENBURG STATION: 102+51.83 -L1-

TITLE: INLET WING REINFORCING AT GREENWAY TUNNEL — CULVERT PLANS SOUTH TRADE STREET

DESIGNED BY:	CTP
DRAWN BY:	JJD
CHECKED BY:	JCW
DATE:	04/06/2017
PROJECT#:	015484010

S-11

Drawing name: K:\RDT_Structures_Culvert\NC\015484006 Trade Str Culvert\Cad\DwgS11_WING_INLET_TUNNEL_W7-8.dwg Layout 22 x 34 Apr 06, 2017 1:51pm by: james.debrow

DocuSign Envelope ID: 8697D079-08D7-4A9A-92F0-A5C74B784302

*NOTE: ALL WALLS WERE POURED WITHOUT SKEW. BASE WIDTH WAS USED AS WALL THICKNESS

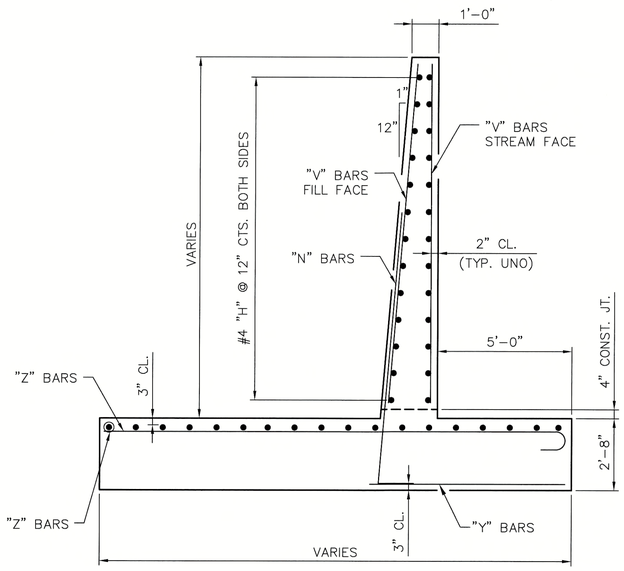

SECTION D-D

SCALE: NTS

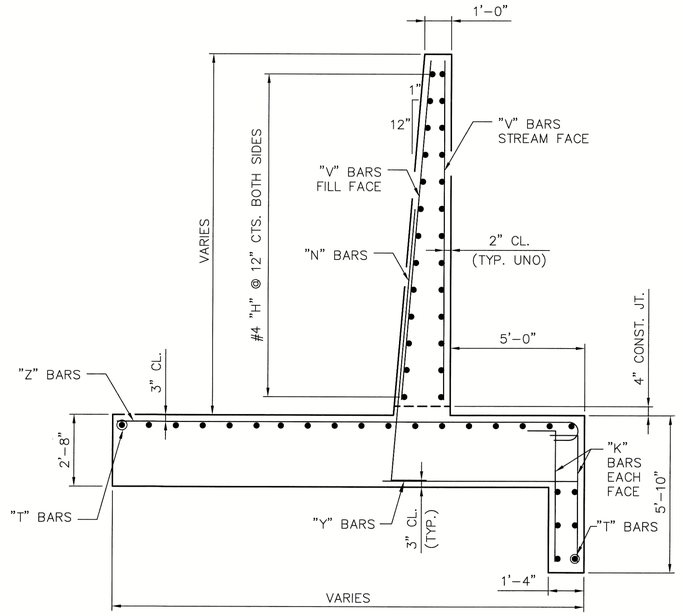

SECTION E-E

SCALE: NTS

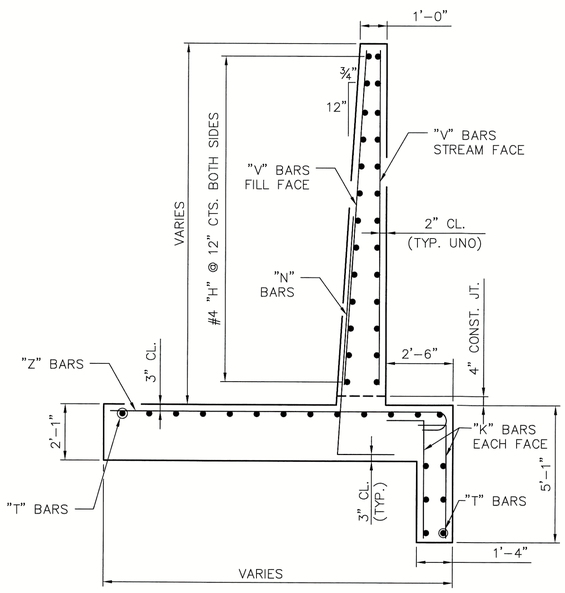

SECTION F-F

SCALE: NTS

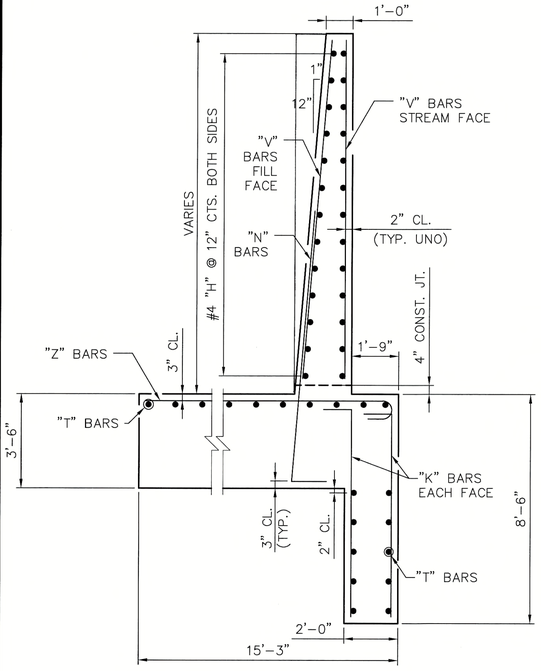

SECTION A-A

SCALE: NTS

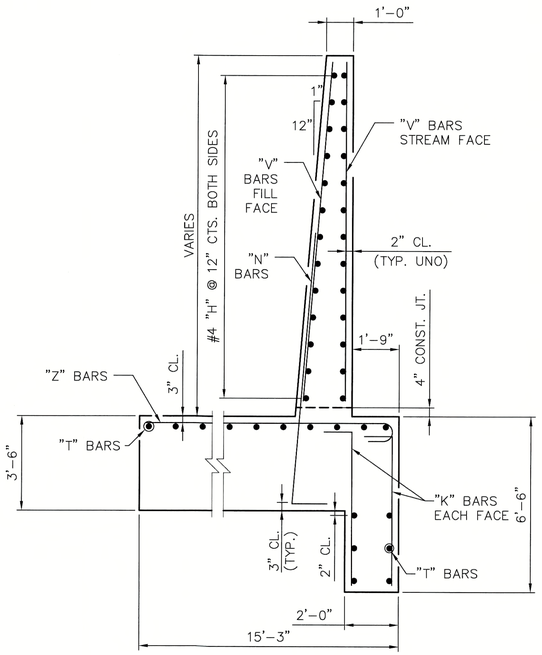

SECTION B-B

SCALE: NTS

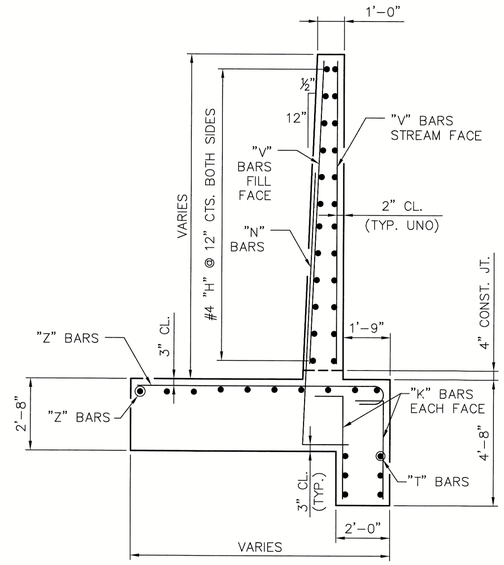

SECTION C-C

SCALE: NTS

DOCUMENT NOT CONSIDERED FINAL UNLESS ALL SIGNATURES COMPLETED

THIS DOCUMENT, TOGETHER WITH THE CONCEPTS AND DESIGNS PRESENTED HEREIN, AS AN INSTRUMENT OF SERVICE, IS INTENDED ONLY FOR THE SPECIFIC PURPOSE AND CLIENT FOR WHICH IT WAS PREPARED. REUSE OF AND IMPROPER RELIANCE ON THIS DOCUMENT WITHOUT WRITTEN AUTHORIZATION AND ADAPTATION BY KIMLEY-HORN AND ASSOCIATES, INC. SHALL BE WITHOUT LIABILITY TO KIMLEY-HORN AND ASSOCIATES, INC.

Kimley»Horn
© 2016 KIMLEY-HORN AND ASSOCIATES, INC.
421 Fayetteville Street, Suite 600
Raleigh, NC 27601-1772
Phone (919) 677-2000

NORTH CAROLINA PROFESSIONAL SEAL 040384 ENGINEER JEFFREY C. WILSON

Digitally signed by Jeffrey C. Wilson 4/6/2017
CAROLINAS

PROJ. REFERENCE NO. 44367.3.2

NO.	DATE	REVISIONS

CLIENT: NORTH CAROLINA DEPARTMENT OF TRANSPORTATION

PROJECT: U - 5804B SOUTH TRADE STREET ROADWAY IMPROVEMENTS
COUNTY: MECKLENBURG
STATION: 102+51.83 -L1-

TITLE: INLET WING REINFORCING DETAILS
CULVERT PLANS
SOUTH TRADE STREET

DESIGNED BY:	CTP
DRAWN BY:	JJD
CHECKED BY:	JCW
DATE:	04/06/2017
PROJECT#:	015484010

S-12

Drawing name: K:\RDT_Structure_Culvert\NC\015484006 Trade Str Culvert\Cad\Dwg\S12_WING_INLET_SECTIONS.dwg Layout 22 x 34 Apr 06, 2017 1:51pm by james.debow

WING 1 BILL OF MATERIAL

BAR	NO.	SIZE	TYPE	LENGTH	WEIGHT
H1	34	4	STR	13'-2"	299
H2	2	4	STR	5'-10"	8
H3	2	4	STR	13'-3"	18
H4	32	4	STR	16'-1"	344
H5	2	4	STR	13'-11"	19
H6	2	4	STR	6'-9"	9
H7	2	4	STR	16'-3"	22
K1	58	5	2	9'-10"	554
K2	78	5	2	7'-10"	637
N1	60	7	3	12'-11"	1584
T6	16	4	STR	11'-2"	141
T7	8	4	STR	7'-5"	93
T8	8	4	STR	15'-8"	84
T50	4	4	STR	12'-2"	33
T51	6	4	STR	27'-10"	112
T52	6	4	STR	6'-10"	27
V1	2	7	STR	17'-9"	73
V2	3	7	STR	17'-4"	106
V3	3	7	STR	16'-11"	104
V4	3	7	STR	16'-6"	101
V5	3	7	STR	16'-1"	99
V6	2	6	STR	17'-9"	53
V7	3	6	STR	17'-4"	78
V8	3	6	STR	16'-11"	76
V9	3	6	STR	16'-6"	74
V10	3	6	STR	16'-1"	72
V11	2	7	STR	17'-10"	73
V12	3	7	STR	17'-7"	108
V13	3	7	STR	17'-2"	104
V14	3	7	STR	16'-7"	102
V15	3	7	STR	16'-2"	99
V16	3	7	STR	15'-9"	97
V17	2	4	STR	17'-10"	24
V18	3	4	STR	17'-5"	35
V19	3	4	STR	17'-0"	34
V20	3	4	STR	16'-7"	33
V21	3	4	STR	16'-2"	32
V22	3	4	STR	15'-9"	32
Z1	58	10	1	17'-11"	4472
Z2	3	10	1	11'-6"	148

WING 2 BILL OF MATERIAL

BAR	NO.	SIZE	TYPE	LENGTH	WEIGHT
H8	34	4	STR	9'-11"	225
H9	32	4	STR	11'-1"	237
H10	2	4	STR	10'-7"	14
H11	2	4	STR	8'-8"	12
H12	2	4	STR	6'-9"	9
H13	2	4	STR	4'-10"	6
H14	2	4	STR	2'-11"	4
H15	2	4	STR	12'-6"	17
H89	2	4	STR	1'-0"	1
K2	78	5	2	6'-0"	463
N2	20	8	3	11'-3"	601
N3	16	10	3	11'-7"	775
T53	6	4	STR	19'-4"	77
V23	11	6	STR	19'-9"	260
V24	11	4	STR	13'-9"	116
V25	2	7	STR	15'-11"	65
V26	2	7	STR	16'-8"	68
V27	2	7	STR	17'-5"	71
V28	2	7	STR	18'-3"	75
V29	2	7	STR	19'-0"	78
V30	2	7	STR	19'-9"	81
V31	2	7	STR	20'-7"	84
V32	2	7	STR	21'-4"	88
V33	2	4	STR	15'-11"	21
V34	2	4	STR	16'-8"	22
V35	2	4	STR	17'-5"	23
V36	2	4	STR	18'-3"	24
V37	2	4	STR	19'-0"	25
V38	2	4	STR	19'-9"	26
V39	2	4	STR	20'-7"	27
V40	2		STR	21'-7"	29
Z3	3	10	1	19'-1"	246
Z4	3	10	1	18'-7"	240
Z5	3	10	1	19'-2"	247
Z6	3	10	1	18'-9"	242
Z7	3	10	1	18'-4"	237
Z8	3	10	1	17'-10"	230
Z9	3	10	1	17'-5"	225
Z10	3	10	1	17'-0"	219
Z11	4	10	1	16'-5"	283
Z12	1	10	1	16'-1"	69
Z13	1	10	1	15'-10"	68
Z14	1	10	1	15'-8"	67
Z15	1	10	1	15'-7"	67
Z16	8	10	1	21'-8"	746
Z17	7	10	1	19'-11"	600
Z18	2	10	1	16'-8"	143
Z19	2	10	1	18'-0"	155

WING 3 BILL OF MATERIAL

BAR	NO.	SIZE	TYPE	LENGTH	WEIGHT
H16	24	4	STR	11'-4"	182
H17	2	4	STR	9'-8"	15
H18	2	4	STR	7'-9"	10
H19	2	4	STR	5'-9"	8
H20	2	4	STR	3'-10"	5
H21	2	4	STR	12'-10"	17
H22	22	4	STR	4'-1"	60
H83	2	4	STR	1'-11"	3
H39	2	4	STR	2'-1"	4
K4	24	4	2	7'-0"	112
N4	12		3	12'-3"	459
T1	2	4	STR	7'-2"	10
T2	2	4	STR	11'-10"	16
T3	2	4	STR	12'-5"	17
T4	2	4	STR	12'-11"	17
T9	23	4	STR	12'-4"	189
V41	2	6	STR	11'-3"	34
V42	2	6	STR	12'-4"	37
V43	2	6	STR	13'-4"	40
V44	2	6	STR	14'-5"	43
V45	2	6	STR	15'-5"	46
V46	2	6	STR	16'-5"	49
V47	2	4	STR	11'-3"	15
V48	2	4	STR	12'-4"	16
V49	2	4	STR	13'-4"	18
V50	2	4	STR	14'-5"	19
V51	2	4	STR	15'-5"	21
V52	2	4	STR	16'-5"	22
V53	2	6	STR	13'-7"	41
V54	2	6	STR	14'-7"	44
V55	2	4	STR	13'-7"	28
V56	2	4	STR	14'-7"	29
Z20	16	10	1	18'-11"	1302
Z21	2	10	1	16'-7"	143
Z22	2	10	1	17'-1"	147

WING 4 BILL OF MATERIAL

BAR	NO.	SIZE	TYPE	LENGTH	WEIGHT
H23	10	4	STR	16'-9"	112
H24	2	4	STR	15'-7"	21
H25	2	4	STR	14'-2"	19
H26	2	4	STR	12'-7"	17
H27	2	4	STR	11'-2"	15
H28	2	4	STR	9'-8"	13
H29	2	4	STR	8'-2"	11
H30	2	4	STR	6'-8"	9
H31	2	4	STR	5'-2"	7
H32	2	4	STR	18'-5"	25
H84	2	4	STR	3'-9"	5
K5	58	4	2	6'-5"	249
N4	4	9	3	11'-7"	153
N5	9	8	3	10'-5"	256
N6	6	6	3	10'-8"	96
N7	1	6	3	9'-3"	14
N8	1	6	3	8'-8"	13
T10	24	4	STR	19'-9"	317
T11	2	4	STR	19'-2"	26
T12	1	4	STR	30'-0"	20
T13	1	4	STR	26'-3"	18
T14	10	4	STR	14'-5"	96
T15	2	4	STR	21'-8"	29
T16	1	4	STR	26'-9"	18
T17	1	4	STR	23'-8"	16
T18	1	4	STR	20'-8"	14
T19	1	4	STR	17'-7"	12
T20	1	4	STR	14'-6"	10
T21	1	4	STR	11'-6"	8
T22	1	4	STR	26'-4"	18
T54	3	4	5	14'-0"	28
T55	3	4	5	14'-8"	29
T59	1	4	STR	8'-5"	6
T60	1	4	STR	5'-4"	4
V57	4	6	STR	14'-6"	87
V58	2	6	STR	14'-0"	42
V59	2	6	STR	13'-4"	40
V60	2	6	STR	12'-7"	38
V61	2	6	STR	11'-11"	36
V62	2	6	STR	11'-4"	34
V63	2	6	STR	10'-1"	32
V64	2	6	STR	9'-11"	30
V65	2	6	STR	9'-3"	28
V66	2	6	STR	8'-7"	26
V67	2	6	STR	7'-11"	24
V68	2	6	STR	7'-3"	22
V69	2	6	STR	6'-7"	20
Z23	2	9	1	17'-8"	220
Z24	16	9	1	17'-2"	934
Z25	2	9	1	13'-3"	99
Z26	2	9	1	12'-7"	88
Z27	2	9	1	11'-10"	80
Z28	2	7	1	11'-1"	45
Z29	2	7	1	10'-5"	43
Z30	2	7	1	9'-8"	40
Z31	2	7	1	9'-0"	37

WING 5 BILL OF MATERIAL

BAR	NO.	SIZE	TYPE	LENGTH	WEIGHT
H33	28	4	STR	22'-8"	424
H34	2	4	STR	21'-10"	27
H35	2	4	STR	13'-3"	18
H36	2	4	STR	4'-9"	6
H37	2	4	STR	22'-9"	30
H38	24	4	STR	5'-8"	129
H39	2	4	STR	3'-0"	4
N9	31	10	3	11'-9"	1567
T23	16	4	STR	22'-8"	242
T24	16	4	STR	6'-9"	72
V70	4	6	STR	15'-9"	95
V71	3	6	STR	16'-2"	73
V72	4	6	STR	14'-0"	84
V73	4	6	STR	14'-5"	87
V74	4	6	STR	14'-11"	90
V75	4	6	STR	15'-4"	92
V76	4	6	STR	15'-10"	95
V77	4	6	STR	16'-4"	98
V78	4	4	STR	15'-9"	42
V79	3	4	STR	15'-5"	30
V80	4	4	STR	14'-0"	37
V81		4	STR	14'-5"	39
V82	4	4	STR	14'-11"	40
V83	4	4	STR	15'-4"	41
V84	4	4	STR	15'-10"	42
V85	4	4	STR	16'-4"	43
Z32	58	10	1	17'-8"	4409

WING 6 BILL OF MATERIAL

BAR	NO.	SIZE	TYPE	LENGTH	WEIGHT
H40	24	4	STR	16'-6"	265
H41	2	4	STR	15'-1"	20
H42	2	4	STR	10'-11"	15
H43	2	4	STR	6'-9"	9
H44	2	4	STR	2'-6"	3
H45	2	4	STR	17'-1"	23
H46	24	4	STR	12'-3"	196
H47	2	4	STR	11'-9"	16
H48	2	4	STR	9'-10"	13
H49	2	4	STR	7'-11"	11
H50	2	4	STR	6'-0"	8
H51	2	4	STR	4'-1"	5
H52	2	4	STR	13'-10"	18
H85	2	4	STR	2'-2"	3
N9	35	10	3	11'-9"	1820
T5	2	4	STR	18'-8"	25
V86	1	6	STR	15'-8"	24
V87	2	6	STR	15'-2"	46
V88	2	6	STR	14'-8"	44
V89	2	6	STR	14'-3"	43
V90	2	6	STR	13'-9"	41
V91	2	6	STR	13'-3"	40
V92	2	6	STR	12'-9"	38
V93	2	6	STR	12'-4"	37
V94	2	6	STR	11'-10"	36
V95	1	4	STR	15'-8"	10
V96	2	4	STR	15'-2"	20
V97	2	4	STR	14'-8"	20
V98	2	4	STR	14'-3"	19
V99	2	4	STR	13'-9"	18
V100	2	4	STR	13'-3"	18
V101	2	4	STR	12'-9"	17
V102	2	4	STR	12'-4"	16
V103	2	4	STR	11'-10"	16
V104	1	6	STR	11'-11"	18
V105	1	6	STR	12'-5"	19
V106	1	6	STR	12'-11"	19
V107	1	6	STR	13'-6"	20
V108	1	6	STR	14'-0"	21
V109	1	6	STR	14'-6"	22
V110	1	6	STR	15'-0"	23
V111	1	6	STR	15'-7"	23
V112	1	6	STR	16'-1"	24
V113	1	6	STR	16'-7"	25
V114	1	6	STR	17'-2"	26
V115	1	6	STR	17'-8"	27
V116	1	6	STR	18'-2"	27
V117	1	4	STR	11'-11"	8
V118	1	4	STR	12'-5"	8
V119	1	4	STR	12'-11"	9
V120	1	4	STR	13'-6"	9
V121	1	4	STR	14'-0"	9
V122	1	4	STR	14'-6"	10
V123	1	4	STR	15'-0"	10
V124	1	4	STR	15'-7"	10
V125	1	4	STR	16'-1"	11
V126	1	4	STR	16'-7"	11
V127	1	4	STR	17'-2"	11
V128	1	4	STR	17'-8"	12
V129	1	4	STR	18'-2"	12
Z33	10	10	1	19'-9"	850
Z34	6	10	1	20'-4"	525
Z35	5	10	1	20'-1"	432
Z36	5	10	1	19'-6"	421
Z37	5	10	1	19'-2"	412
Z38	5	10	1	18'-10"	405
Z39	2	10	1	14'-6"	125
Z40	2	10	1	18'-8"	161
Z41	28	10	1	23'-7"	2841

WING 7 BILL OF MATERIAL

BAR	NO.	SIZE	TYPE	LENGTH	WEIGHT
V41	2	5	STR	15'-7"	33
V42	2	5	STR	15'-2"	32
V43	2	5	STR	16'-8"	35
V44	2	5	STR	17'-3"	36
V45	2	5	STR	17'-8"	37
V46	2	5	STR	18'-3"	38
V47	2	5	STR	18'-9"	39
V48	1	5	STR	19'-3"	20
V149	2	4	STR	9'-1"	13
V150	2	4	STR	10'-5"	14
V151	2	4	STR	10'-11"	15
V152	2	4	STR	11'-5"	15
V153	2	4	STR	11'-11"	16
V154	2	4	STR	12'-6"	17
V155	2	4	STR	13'-0"	17
V156	2	4	STR	13'-6"	18
V157	2	4	STR	14'-0"	19
V158	2	4	STR	14'-7"	19
V159	2	4	STR	15'-1"	20
V160	2	4	STR	15'-7"	21
V161	2	4	STR	15'-2"	20
V162	2	4	STR	16'-8"	22
V163	2	4	STR	17'-3"	23
V164	2	4	STR	17'-8"	24
V165	2	4	STR	18'-3"	24
V166	2	4	STR	18'-9"	25
V167	1	4	STR	19'-3"	13
V168	2	5	STR	13'-6"	28
V169	2	5	STR	14'-1"	29
V170	1	5	STR	14'-7"	15
V171	2	5	STR	14'-10"	46
V172	2	4	STR	13'-6"	18
V173	2	4	STR	14'-1"	19
V174	1	4	STR	14'-7"	10
V175	3	4	STR	14'-10"	30
Z42	39	9	1	26'-6"	3514
Z43	3	9	1	16'-6"	164
Z44	3	9	1	16'-11"	173
Z45	4	9	1	17'-2"	233

WING 8 BILL OF MATERIAL

BAR	NO.	SIZE	TYPE	LENGTH	WEIGHT
V176	2	5	STR	14'-10"	31
V177	1	5	STR	14'-5"	15
V178	1	5	STR	13'-10"	14
V179	1	5	STR	13'-4"	14
V180	2	4	STR	14'-1"	20
V181	1	4	STR	14'-6"	10
V182	1	4	STR	13'-10"	9
V183	1	4	STR	14'-4"	10
V184	1	4	STR	15'-1"	16
V185	1	6	STR	14'-7"	15
V186	1	6	STR	14'-0"	15
V187	1	6	STR	13'-6"	14
V188	1	6	STR	12'-11"	13
V189	1	6	STR	12'-5"	13
V190	1	6	STR	11'-10"	12
V191	1	6	STR	11'-4"	12
V192	1	6	STR	10'-9"	11
V193	1	6	STR	10'-3"	11
V194	1	6	STR	9'-8"	10
V195	1	6	STR	9'-2"	10
V196	1	6	STR	8'-7"	9
V197	1	6	STR	8'-1"	8
V198	1	4	STR	15'-1"	16
V199	1	4	STR	14'-7"	10
V200	1	4	STR	14'-0"	9

WING 8 BILL OF MATERIAL

BAR	NO.	SIZE	TYPE	LENGTH	WEIGHT
V201	1	4	STR	13'-6"	9
V202	1	4	STR	12'-11"	9
V203	1	4	STR	12'-5"	8
V204	1	4	STR	11'-10"	8
V205	1	4	STR	11'-4"	8
V206	1	4	STR	10'-9"	7
V207	1	4	STR	10'-3"	7
V208	1	4	STR	9'-8"	6
V209	1	4	STR	9'-2"	6
V210	1	4	STR	8'-7"	6
V211	1	4	STR	8'-1"	5
V212	2	6	STR	10'-1"	13
V213	2	6	STR	9'-7"	13
V214	2	6	STR	9'-0"	12
V215	2	6	STR	8'-6"	11
V216	2	6	STR	7'-11"	11
V217	2	6	STR	7'-5"	10
Z46	16	10	1	17'-2"	1182
Z47	1	10	1	15'-8"	67
Z48	3	10	1	15'-0"	194
Z49	3	10	1	14'-5"	186
Z50	3	10	1	13'-9"	177
Z51	3	10	1	13'-2"	170
Z52	2	10	1	12'-5"	160
Z53	1	7	1	12'-5"	25
Z54	3	7	1	11'-10"	73
Z55	3	7	1	11'-3"	69
Z56	3	7	1	10'-7"	65
Z57	3	7	1	9'-11"	61
Z58	3	7	1	9'-4"	57
Z59	3	7	1	8'-8"	53

TUNNEL BILL OF MATERIAL

BAR	NO.	SIZE	TYPE	LENGTH	WEIGHT
G1	16	4	STR	8'-6"	91
G2	16	4	STR	9'-6"	102
H82	8	4	STR	17'-9"	379
N17	8	7	3	9'-3"	151
R1	32	4	4	3'-9"	80
H18	16	4	STR	14'-10"	159

REINFORCING STEEL –LBS– 57,167

DOCUMENT NOT CONSIDERED FINAL UNLESS ALL SIGNATURES COMPLETED

ESENTED HEREIN, AS AN INSTRUMENT OF SERVICE, IS INTENDED ONLY FOR THE SPECIFIC PURPOSE AND CLIENT FOR WHICH IT WAS PREPARED. REUSE OF AND IMPROPER RELIANCE ON THIS DOCUMENT WITHOUT WRITTEN AUTHORIZATION AND ADAPTATION BY KIMLEY-HORN AND ASSOCIATES, INC. SHALL BE WITHOUT LIABILITY TO KIMLEY-HORN AND ASSOCIATES, INC.

Kimley»Horn
© 2016 KIMLEY-HORN AND ASSOCIATES, INC.
421 Fayetteville Street, Suite 600
Raleigh, NC 27601-1772
Phone (919) 677-2000

NORTH CAROLINA PROFESSIONAL SEAL 040384 ENGINEER JEFFREY C. WILSON

DocuSigned by: Jeffrey C. Wilson 4/6/2017

PROJ. REFERENCE NO. 44367.3.2

NO.	DATE	REVISIONS

CLIENT: STATE OF NORTH CAROLINA • DEPARTMENT OF TRANSPORTATION

PROJECT: U - 5804B SOUTH TRADE STREET ROADWAY IMPROVEMENTS COUNTY: MECKLENBURG STATION: 102+51.83 -L1-

TITLE: WING REINFORCING QUANTITIES CULVERT PLANS SOUTH TRADE STREET

DESIGNED BY:	CTP
DRAWN BY:	JJD
CHECKED BY:	JCW
DATE:	04/06/2017
PROJECT#:	015484010

S-14

DocuSign Envelope ID: 8697D079-08D7-4A9A-92F0-A5C74B784302

LOAD AND RESISTANCE FACTOR RATING (LRFR)SUMMARY FOR REINFORCED CONCRETE BOX CULVERTS

LEVEL		VEHICLE	WEIGHT (W) (TONS)	CONTROLLING LOAD RATING (#)	MINIMUM RATING FACTORS (RF)	TONS = W x RF	STRENGTH I LIMIT STATE									COMMENT NUMBER
							LIVE-LOAD FACTORS (γL)	MOMENT				SHEAR				
								RATING FACTOR	BOX NO.	ELEMENT TYPE	DISTANCE FROM LEFT END OF ELEMENT (ft)	RATING FACTOR	BOX NO.	ELEMENT TYPE	DISTANCE FROM LEFT END OF ELEMENT (ft)	
DESIGN LOAD RATING		HL-93 (INVENTORY)	N/A	1	4.58	--	1.75	4.58	1	EXT WALL	6.58	54.72	1	EXT WALL	0.00	
		HL-93 (OPERATING)	N/A	--	5.93	--	1.35	5.93	1	EXT WALL	6.58	54.72	1	EXT WALL	0.00	
		HS-20 (INVENTORY)	36.000	2	4.58	164.88	1.75	4.58	1	EXT WALL	6.58	54.72	1	EXT WALL	0.00	
		HS-20 (OPERATING)	36.000	--	5.93	213.48	1.35	5.93	1	EXT WALL	6.58	54.72	1	EXT WALL	0.00	
LEGAL LOAD RATING	SINGLE VEHICLE (SV)	SNSH	13.500	--	5.72	77.22	1.40	5.72	1	EXT WALL	6.58	54.72	1	EXT WALL	0.00	
		SNGARBS2	20.000	--	5.72	114.40	1.40	5.72	1	EXT WALL	6.58	54.72	1	EXT WALL	0.00	
		SNAGRIS2	22.000	--	5.72	125.84	1.40	5.72	1	EXT WALL	6.58	54.72	1	EXT WALL	0.00	
		SNCOTTS3	27.250	--	5.72	155.87	1.40	5.72	1	EXT WALL	6.58	54.72	1	EXT WALL	0.00	
		SNAGGRS4	34.925	--	5.72	199.77	1.40	5.72	1	EXT WALL	6.58	54.72	1	EXT WALL	0.00	
		SNS5A	35.550	--	5.72	203.35	1.40	5.72	1	EXT WALL	6.58	54.72	1	EXT WALL	0.00	
		SNS6A	39.950	--	5.72	228.51	1.40	5.72	1	EXT WALL	6.58	54.72	1	EXT WALL	0.00	
		SNS7B	42.000	--	5.72	240.24	1.40	5.72	1	EXT WALL	6.58	54.72	1	EXT WALL	0.00	
	TRUCK TRACTOR SEMI-TRAILER (TTST)	TNAGRIT3	33.000	--	5.72	188.76	1.40	5.72	1	EXT WALL	6.58	54.72	1	EXT WALL	0.00	
		TNT4A	33.075	--	5.72	189.19	1.40	5.72	1	EXT WALL	6.58	54.72	1	EXT WALL	0.00	
		TNT6A	41.600	--	5.72	237.95	1.40	5.72	1	EXT WALL	6.58	54.72	1	EXT WALL	0.00	
		TNT7A	42.000	--	5.72	240.24	1.40	5.72	1	EXT WALL	6.58	54.72	1	EXT WALL	0.00	
		TNT7B	42.000	--	5.72	240.24	1.40	5.72	1	EXT WALL	6.58	54.72	1	EXT WALL	0.00	
		TNAGRIT4	43.000	--	5.72	245.96	1.40	5.72	1	EXT WALL	6.58	54.72	1	EXT WALL	0.00	
		TNAGT5A	45.000	3	5.72	257.40	1.40	5.72	1	EXT WALL	6.58	54.72	1	EXT WALL	0.00	
		TNAGT5B	45.000	--	5.72	257.40	1.40	5.72	1	EXT WALL	6.58	54.72	1	EXT WALL	0.00	

LOAD FACTORS:

DESIGN LOAD RATING FACTORS

LOAD TYPE	MAX FACTOR	MIN FACTOR
DC	1.25	0.90
DW	1.50	0.65
EV	1.30	0.90
EH	1.35	0.90
ES	1.35	0.90
LS	1.75	--
WA	1.00	--

NOTE:

RATING FACTORS ARE BASED ON THE STRENGTH I LIMIT STATE.

COMMENTS:

1.
2.
3.
4.

CONTROLLING LOAD RATING
1 DESIGN LOAD RATING (HL-93)
2 DESIGN LOAD RATING (HS-20)
3 LEGAL LOAD RATING * *
* * SEE CHART FOR VEHICLE TYPE

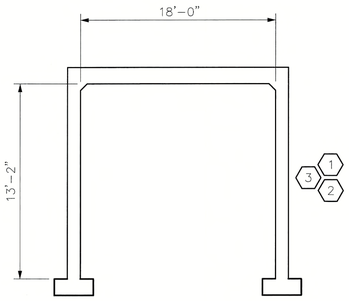

LRFR SUMMARY

(LOOKING DOWNSTREAM)

ASSEMBLED BY :	DATE :
CHECKED BY :	DATE :
DRAWN BY : WMC 7/11	REV. 10/1/11 MAA/GM
CHECKED BY : GM 7/11	.
	.

DOCUMENT NOT CONSIDERED FINAL UNLESS ALL SIGNATURES COMPLETED

THIS DOCUMENT, TOGETHER WITH THE CONCEPTS AND DESIGNS PRESENTED HEREIN, AS AN INSTRUMENT OF SERVICE, IS INTENDED ONLY FOR THE SPECIFIC PURPOSE AND CLIENT FOR WHICH IT WAS PREPARED. REUSE OF AND IMPROPER RELIANCE ON THIS DOCUMENT WITHOUT WRITTEN AUTHORIZATION AND ADAPTATION BY KIMLEY-HORN AND ASSOCIATES, INC. SHALL BE WITHOUT LIABILITY TO KIMLEY-HORN AND ASSOCIATES, INC.

STD. NO. LRFR5

Kimley»Horn
© 2016 KIMLEY-HORN AND ASSOCIATES, INC.
421 Fayetteville Street, Suite 600
Raleigh, NC 27601-1772
Phone (919) 677-2000

NORTH CAROLINA PROFESSIONAL SEAL 040384 ENGINEER JEFFREY C. WILSON

DocuSigned by: Jeffrey C. Wilson 4/6/2017
CE4D4...

PROJ. REFERENCE NO. 44367.3.2

NO.	DATE	REVISIONS

CLIENT: NORTH CAROLINA DEPARTMENT OF TRANSPORTATION

PROJECT: U - 5804B SOUTH TRADE STREET ROADWAY IMPROVEMENTS COUNTY: MECKLENBURG STATION: 102+51.83 -L1-

TITLE: LRFR SUMMARY FOR REINFORCED CONCRETE BOX CULVERTS (NON-INTERSTATE TRAFFIC) CULVERT PLANS SOUTH TRADE STREET

DESIGNED BY:	CTP
DRAWN BY:	JJD
CHECKED BY:	JCW
DATE:	04/06/2017
PROJECT#:	015484010

S-15

Drawing name: K:\RDT_Structures_Culvert\NC\015484006 Trade Str Culvert\Cad\Dwg\S15_LRFR_SUMMARY.dwg Layout:22 x 34 Apr 06, 2017 1:52pm by: james.debrow

DocuSign Envelope ID: F0D3147D-5360-48F4-8C08-A6EB766D1CC5

NOT INSTALLED

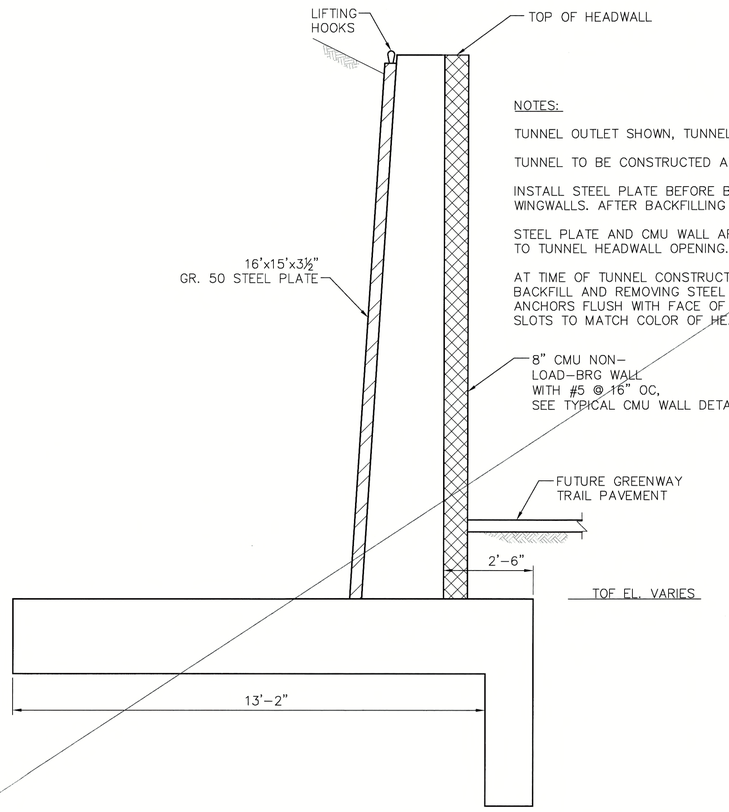

NOTES:

TUNNEL OUTLET SHOWN, TUNNEL INLET SIMILAR.

TUNNEL TO BE CONSTRUCTED AT A FUTURE DATE.

INSTALL STEEL PLATE BEFORE BACKFILLING TUNNEL HEADWALL AND ADJACENT WINGWALLS. AFTER BACKFILLING CONSTRUCT CMU WALL.

STEEL PLATE AND CMU WALL ARE TEMPORARY AND WILL SERVE AS BARRIERS TO TUNNEL HEADWALL OPENING.

AT TIME OF TUNNEL CONSTRUCTION, DEMO CMU WALL BEFORE EXCAVATING BACKFILL AND REMOVING STEEL PLATE. DURING CMU DEMO, CUT BENT TAB ANCHORS FLUSH WITH FACE OF HEADWALL AND EPOXY DOVETAIL ANCHOR SLOTS TO MATCH COLOR OF HEADWALL.

TEMPORARY TUNNEL SECTION

NOTES:

1. FOR TUNNEL GATE, SEE SPECIAL PROVISIONS.
2. ALL REINFORCED MASONRY WORK SHALL CONFORM TO CURRENT EDITION OF ACI 530 AND ACI 530.1.
3. CONCRETE MASONRY UNITS SHALL CONFORM TO THE REQUIREMENTS OF ASTM C90.
4. MINIMUM COMPRESSIVE STRENGTH OF MASONRY ASSEMBLAGE, f'm, IS 1500 PSI.
5. MORTAR SHALL CONFORM TO THE REQUIREMENTS OF ASTM C270 AND SHALL BE TYPE S.
6. GROUT FOR HOLLOW MASONRY UNITS SHALL HAVE A 28 DAY COMPRESSIVE STRENGTH OF 3,000 PSI AND SHALL CONFORM TO ASTM C476.
7. ALL CMU BELOW GRADE SHALL BE FILLED WITH 3,000 PSI STRENGTH GROUT.
8. SLUMP OF GROUT SHALL BE IN THE RANGE OF 7 TO 11 INCHES AND SHALL BE RECONSOLIDATED BY MECHANICAL VIBRATION TO ELIMINATE VOIDS CREATED BY BLEED OFF OF THE WATER IN THE GROUT ½ HOUR FOLLOWING PLACEMENT.
9. PROVIDE HORIZONTAL LADDER TYPE WIRE REINFORCING AT 16" OC MAXIMUM.
10. PROVIDE 1-#5 VERTICAL REINFORCING EACH SIDE OF ALL OPENINGS IN MASONRY WALLS.
11. PROVIDE 1-#5 VERTICAL REINFORCING AT ALL WALL CORNERS, ENDS, AND INTERSECTIONS.
12. SPLICES IN HORIZONTAL AND VERTICAL REINFORCING SHALL BE LAPPED 48 BAR DIAMETERS OR A MINIMUM OF 24", WHICHEVER IS GREATER.
13. ALL HEAD AND BED JOINTS SHALL BE FULL, UNLESS OTHERWISE DIRECTED BY ARCHITECTURAL PLANS.
14. DOVETAIL ANCHORS IN CONCRETE FOR MASONRY ANCHORAGE SHALL BE HOT-DIP GALVANIZED-STEEL SHEET NOT LESS THAN 0.034" THICK WITH BENT TAB ANCHORS.

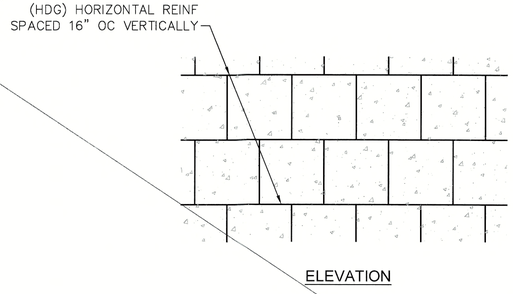

ELEVATION

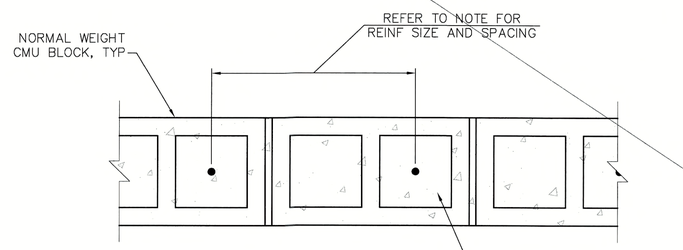

NOTES:

1. UNLESS NOTED OTHERWISE ON THE DRAWINGS, REINFORCE ALL CMU WALLS WITH (1) #5 BAR @ 16" OC. FULLY GROUT ALL CELLS CONTAINING REINF.

PLAN

TYPICAL CMU WALL DETAIL

DOCUMENT NOT CONSIDERED FINAL UNLESS ALL SIGNATURES COMPLETED

Kimley»Horn
© 2017 KIMLEY-HORN AND ASSOCIATES, INC.
421 Fayetteville Street, Suite 600
Raleigh, NC 27601-1772
Phone (919) 677-2000

NORTH CAROLINA PROFESSIONAL SEAL 040384 ENGINEER JEFFREY C. WILSON

Digitally signed by Jeffrey C. Wilson 11/1/201
Date: 2017.11.01

PROJ. REFERENCE NO.
44367.3.2

NO.	DATE	REVISIONS

CLIENT: NORTH CAROLINA • NOTHING COMPARES • STATE DEPARTMENT OF TRANSPORTATION

PROJECT:
U - 5804B
SOUTH TRADE STREET
ROADWAY IMPROVEMENTS
COUNTY: MECKLENBURG
STATION: 102+51.83 -L1-

TITLE:
TUNNEL GATE DETAILS
CULVERT PLANS
SOUTH TRADE STREET

DESIGNED BY:	CTP
DRAWN BY:	JJD
CHECKED BY:	JCW
DATE:	11/01/2017
PROJECT#:	015484010

S-16

Drawing name: K:\RDT_Structures_Culvert\NC\015484006 Trade Str Culvert\Cad\Dwgs\S16_MISCELLANEOUS_DETAILS.dwg Layout 22 x 34 Nov 01, 2017 5:34pm by: Jeff.Wilson

THIS DOCUMENT, TOGETHER WITH THE CONCEPTS AND DESIGNS PRESENTED HEREIN, AS AN INSTRUMENT OF SERVICE, IS INTENDED ONLY FOR THE SPECIFIC PURPOSE AND CLIENT FOR WHICH IT WAS PREPARED. REUSE OF AND IMPROPER RELIANCE ON THIS DOCUMENT WITHOUT WRITTEN AUTHORIZATION AND ADAPTATION BY KIMLEY-HORN AND ASSOCIATES, INC. SHALL BE WITHOUT LIABILITY TO KIMLEY-HORN AND ASSOCIATES, INC.

DocuSign Envelope ID: 39637A0-563C-4129-8B3D-0D9A451BB632

STANDARD NOTES

DESIGN DATA:

SPECIFICATIONS	A.A.S.H.T.O. (CURRENT)
LIVE LOAD	SEE PLANS
IMPACT ALLOWANCE	SEE A.A.S.H.T.O.
STRESS IN EXTREME FIBER OF	
STRUCTURAL STEEL – AASHTO M270 GRADE 36	20,000 LBS. PER SQ. IN.
– AASHTO M270 GRADE 50W	27,000 LBS. PER SQ. IN.
– AASHTO M270 GRADE 50	27,000 LBS. PER SQ. IN.
REINFORCING STEEL IN TENSION	
GRADE 60	24,000 LBS. PER SQ. IN.
CONCRETE IN COMPRESSION	1,200 LBS. PER SQ. IN.
CONCRETE IN SHEAR	SEE A.A.S.H.T.O.
STRUCTURAL TIMBER – TREATED OR	
UNTREATED – EXTREME FIBER STRESS	1,800 LBS. PER SQ. IN.
COMPRESSION PERPENDICULAR TO GRAIN OF TIMBER	375 LBS. PER SQ. IN.
EQUIVALENT FLUID PRESSURE OF EARTH	30 LBS. PER CU. FT. (MINIMUM)

MATERIAL AND WORKMANSHIP:

EXCEPT AS MAY OTHERWISE BE SPECIFIED ON PLANS OR IN THE SPECIAL PROVISIONS, ALL MATERIAL AND WORKMANSHIP SHALL BE IN ACCORDANCE WITH THE 2012 "STANDARD SPECIFICATIONS FOR ROADS AND STRUCTURES" OF THE N. C. DEPARTMENT OF TRANSPORTATION.

STEEL SHEET PILING FOR PERMANENT OR TEMPORARY APPLICATIONS SHALL BE HOT ROLLED.

CONCRETE:

UNLESS OTHERWISE REQUIRED ON PLANS, CLASS A CONCRETE SHALL BE USED FOR ALL PORTIONS OF ALL STRUCTURES WITH THE EXCEPTION THAT: CLASS AA CONCRETE SHALL BE USED IN BRIDGE SUPERSTRUCTURES, ABUTMENT BACKWALLS, AND APPROACH SLABS; AND CLASS B CONCRETE SHALL BE USED FOR SLOPE PROTECTION AND RIP RAP.

CONCRETE CHAMFERS:

UNLESS OTHERWISE NOTED ON THE PLANS, ALL EXPOSED CORNERS ON STRUCTURES SHALL BE CHAMFERED 3/4" WITH THE FOLLOWING EXCEPTIONS: TOP CORNERS OF CURBS MAY BE ROUNDED TO 1–1/2" RADIUS WHICH IS BUILT INTO CURB FORMS; CORNERS OF TRANSVERSE FLOOR EXPANSION JOINTS SHALL BE ROUNDED WITH A 1/4" FINISHING TOOL UNLESS OTHERWISE REQUIRED ON PLANS; AND CORNERS OF EXPANSION JOINTS IN THE ROADWAY FACES AND TOPS OF CURBS AND SIDEWALKS SHALL BE ROUNDED TO A 1/4" RADIUS WITH A FINISHING STONE OR TOOL UNLESS OTHERWISE REQUIRED ON PLANS.

DOWELS:

DOWELS WHEN INDICATED ON PLANS AS FOR CULVERT EXTENSIONS, SHALL BE EMBEDDED AT LEAST 12" INTO THE OLD CONCRETE AND GROUTED INTO PLACE WITH 1:2 CEMENT MORTAR.

ALLOWANCE FOR DEAD LOAD DEFLECTION, SETTLEMENT, ETC. IN CASTING SUPERSTRUCTURES:

BRIDGES SHALL BE BUILT ON THE GRADE OR VERTICAL CURVE SHOWN ON PLANS. SLABS, CURBS AND PARAPETS SHALL CONFORM TO THE GRADE OR CURVE.

ALL DIMENSIONS WHICH ARE GIVEN IN SECTION AND ARE AFFECTED BY DEAD LOAD DEFLECTIONS ARE DIMENSIONS AT CENTER LINE OF BEARING UNLESS OTHERWISE NOTED ON PLANS. IN SETTING FORMS FOR STEEL BEAM BRIDGES AND PRESTRESSED CONCRETE GIRDER BRIDGES, ADJUSTMENTS SHALL BE MADE DUE TO THE DEAD LOAD DEFLECTIONS FOR THE ELEVATIONS SHOWN. WHERE BLOCKS ARE SHOWN OVER BEAMS FOR BUILDING UP TO THE SLAB, THE VERTICAL DIMENSIONS OF THE BLOCKS SHALL BE ADJUSTED BETWEEN BEARINGS TO COMPENSATE FOR DEAD LOAD DEFLECTIONS, VERTICAL CURVE ORDINATE, AND ACTUAL BEAM CAMBER. WHERE BOTTOM OF SLAB IS IN LINE WITH BOTTOM OF TOP FLANGES, DEPTH OF SLAB BETWEEN BEARINGS SHALL BE ADJUSTED TO COMPENSATE FOR DEAD LOAD DEFLECTION, VERTICAL CURVE ORDINATE, AND ACTUAL BEAM CAMBER.

IN SETTING FALSEWORK AND FORMS FOR REINFORCED CONCRETE SPANS, AN ALLOWANCE SHALL BE MADE FOR DEAD LOAD DEFLECTIONS, SETTLEMENT OF FALSEWORK, AND PERMANENT CAMBER WHICH SHALL BE PROVIDED FOR IN ADDITION TO THE ELEVATIONS SHOWN. AFTER REMOVAL OF THE FALSEWORK, THE FINISHED STRUCTURES SHALL CONFORM TO THE PROFILE AND ELEVATIONS SHOWN ON THE PLANS AND CONSTRUCTION ELEVATIONS FURNISHED BY THE ENGINEER.

DETAILED DRAWINGS FOR FALSEWORK OR FORMS FOR BRIDGE SUPERSTRUCTURE AND ANY STRUCTURE OR PARTS OF A STRUCTURE AS NOTED ON THE PLANS SHALL BE SUBMITTED TO THE ENGINEER FOR APPROVAL BEFORE CONSTRUCTION OF THE FALSEWORK OR FORMS IS STARTED.

REINFORCING STEEL:

ALL REINFORCING STEEL SHALL BE DEFORMED. DIMENSIONS RELATIVE TO PLACEMENT OF REINFORCING ARE TO CENTERS OF BARS UNLESS OTHERWISE INDICATED IN THE PLANS. DIMENSIONS ON BAR DETAILS ARE TO CENTERS OF BARS OR ARE OUT TO OUT AS INDICATED ON PLANS.

WIRE BAR SUPPORTS SHALL BE PROVIDED FOR REINFORCING STEEL WHERE INDICATED ON THE PLANS. WHEN BAR SUPPORT PIECES ARE PLACED IN CONTINUOUS LINES, THEY SHALL BE SO PLACED THAT THE ENDS OF THE SUPPORTING WIRES SHALL BE LAPPED TO LOCK LEGS ON ADJOINING PIECES.

STRUCTURAL STEEL:

AT THE CONTRACTOR'S OPTION, HE MAY SUBSTITUTE 7/8" ø SHEAR STUDS FOR THE 3/4" ø STUDS SPECIFIED ON THE PLANS. THIS SUBSTITUTION SHALL BE MADE AT THE RATE OF 3 – 7/8" ø STUDS FOR 4 – 3/4" ø STUDS, AND STUD SPACING CHANGES SHALL BE MADE AS NECESSARY TO PROVIDE THE SAME EQUIVALENT NUMBER OF 7/8" ø STUDS ALONG THE BEAM AS SHOWN FOR 3/4" ø STUDS BASED ON THE RATIO OF 3 – 7/8" ø STUDS FOR 4 – 3/4" ø STUDS. STUDS OF THE LENGTH SPECIFIED ON THE PLANS MUST BE PROVIDED. THE MAXIMUM SPACING SHALL BE 2'–0".

EXCEPT AT THE INTERIOR SUPPORTS OF CONTINUOUS BEAMS WHERE THE COVER PLATE IS IN CONTACT WITH BEARING PLATE, THE CONTRACTOR MAY, AT HIS OPTION, SUBSTITUTE FOR THE COVER PLATES DESIGNATED ON THE PLANS COVER PLATES OF THE EQUIVALENT AREA PROVIDED THESE PLATES ARE AT LEAST 5/16" IN THICKNESS AND DO NOT EXCEED A WIDTH EQUAL TO THE FLANGE WIDTH LESS 2" OR A THICKNESS EQUAL TO 2 TIMES THE FLANGE THICKNESS. THE SIZE OF FILLET WELDS SHALL CONFORM TO THE REQUIREMENTS OF THE CURRENT ANSI/AASHTO/AWS " BRIDGE WELDING CODE". ELECTROSLAG WELDING WILL NOT BE PERMITTED.

WITH THE SOLE EXCEPTION OF EDGES AT SURFACES WHICH BEAR ON OTHER SURFACES,ALL SHARP EDGES AND ENDS OF SHAPES AND PLATES SHALL BE SLIGHTLY ROUNDED BY SUITABLE MEANS TO A RADIUS OF APPROXIMATELY 1/16 INCH OR EQUIVALENT FLAT SURFACE AT A SUITABLE ANGLE PRIOR TO PAINTING, GALVANIZING, OR METALLIZING.

HANDRAILS AND POSTS:

METAL STANDARDS AND FACES OF THE CONCRETE END POSTS FOR THE METAL RAIL SHALL BE SET NORMAL TO THE GRADE OF THE CURB, UNLESS OTHERWISE SHOWN ON PLANS. THE METAL RAIL AND TOPS OF CONCRETE POSTS USED WITH THE ALUMINUM RAIL SHALL BE BUILT PARALLEL TO THE GRADE OF THE CURB.

METAL HANDRAILS SHALL BE IN ACCORDANCE WITH THE PLANS. RAILS SHALL BE AS MANUFACTURED FOR HAND RAILING. CASTINGS SHALL BE OF A UNIFORM APPEARANCE. FINS AND OTHER DEFORMATIONS RESULTING FROM CASTING OR OTHERWISE SHALL BE REMOVED IN A MANNER SO THAT A UNIFORM COLORING OF THE COMPLETED CASTING SHALL BE OBTAINED. CASTINGS WITH DISCOLORATIONS OR OF NON–UNIFORM COLORING WILL NOT BE ACCEPTED. CERTIFIED MILL REPORTS ARE REQUIRED FOR METAL RAILS AND POSTS.

SPECIAL NOTES:

GENERALLY, IN CASE OF DISCREPANCY, THIS STANDARD SHEET OF NOTES SHALL GOVERN OVER THE SPECIFICATIONS, BUT THE REMAINDER OF THE PLANS SHALL GOVERN OVER NOTES HEREON, AND SPECIAL PROVISIONS SHALL GOVERN OVER ALL. SEE SPECIFICATIONS ARTICLE 105–4.

Kimley»Horn
© 2016 KIMLEY-HORN AND ASSOCIATES, INC.
421 Fayetteville Street, Suite 600
Raleigh, NC 27601-1772
Phone (919) 677-2000

NORTH CAROLINA PROFESSIONAL SEAL 040384 ENGINEER JEFFREY C. WILSON

DocuSigned by: Jeffrey C. Wilson 10/23/2017

PROJ. REFERENCE NO. 44367.3.2

NO.	DATE	REVISIONS

CLIENT: NORTH CAROLINA • DEPARTMENT OF TRANSPORTATION • STATE

PROJECT:
U - 5804B
SOUTH TRADE STREET
ROADWAY IMPROVEMENTS
COUNTY: MECKLENBURG
STATION: 102+51.83 -L1-

TITLE:
STANDARD NOTES
CULVERT PLANS
SOUTH TRADE STREET

DESIGNED BY:	CTP
DRAWN BY:	JJD
CHECKED BY:	JCW
DATE:	04/06/2017
PROJECT#:	015484010

SN

ASSEMBLED BY :		DATE :	
CHECKED BY :		DATE :	
DRAWN BY : WMC 7/11	REV. 10/1/11 MAA/GM		
CHECKED BY : GM 7/11	:		

DOCUMENT NOT CONSIDERED FINAL UNLESS ALL SIGNATURES COMPLETED

Drawing name: K:\RDT_Structures_Culvert\NC\015484006 Trade Str Culvert\Cad\Dwg\SN.dwg Layout 22 x 34 Oct 23, 2017 6:25pm by: Jeff.Wilson

THIS DOCUMENT, TOGETHER WITH THE CONCEPTS AND DESIGNS PRESENTED HEREIN, AS AN INSTRUMENT OF SERVICE, IS INTENDED ONLY FOR THE SPECIFIC PURPOSE AND CLIENT FOR WHICH IT WAS PREPARED. REUSE OF AND IMPROPER RELIANCE ON THIS DOCUMENT WITHOUT WRITTEN AUTHORIZATION AND ADAPTATION BY KIMLEY-HORN AND ASSOCIATES, INC. SHALL BE WITHOUT LIABILITY TO KIMLEY-HORN AND ASSOCIATES, INC.

REV. 8-16-99 RWW √( ) LES

STD. NO. SN