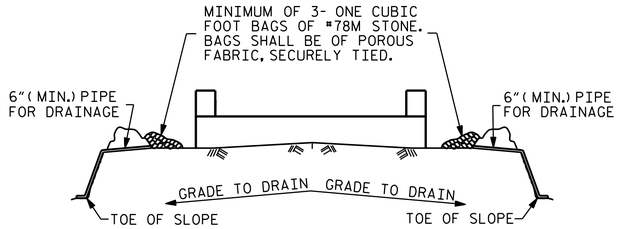

BAGGED STONE AND PIPE SHALL BE PLACED IMMEDIATELY AFTER COMPLETION OF END BENT EXCAVATION. PIPE MAY BE EITHER CONCRETE, CORRUGATED STEEL, CORRUGATED ALUMINUM ALLOY, OR CORRUGATED PLASTIC. PERFORATED PIPE WILL NOT BE ALLOWED.

BAGGED STONE SHALL REMAIN IN PLACE UNTIL THE ENGINEER DIRECTS THAT IT BE REMOVED. THE CONTRACTOR SHALL REMOVE AND DISPOSE OF SILT ACCUMULATIONS AT BAGGED STONE WHEN SO DIRECTED BY THE ENGINEER. BAGS SHALL BE REMOVED AND REPLACED WHENEVER THE ENGINEER DETERMINES THAT THEY HAVE DETERIORATED AND LOST THEIR EFFECTIVENESS.

NO SEPARATE PAYMENT WILL BE MADE FOR THIS WORK AND THE ENTIRE COST OF THIS WORK SHALL BE INCLUDED IN THE UNIT CONTRACT PRICE BID FOR THE SEVERAL PAY ITEMS.

TEMPORARY DRAINAGE AT END BENT

BAR TYPES

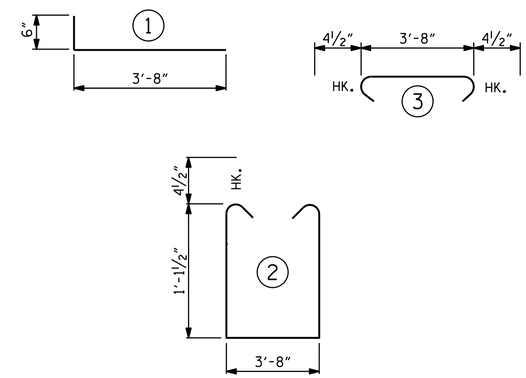

ALL BAR DIMENSIONS ARE OUT TO OUT.

BILL OF MATERIAL FOR ONE END BENT

BAR	NO.	SIZE	TYPE	LENGTH	WEIGHT
B1	10	#9	STR	37'-6"	1275
B2	4	#4	STR	20'-1"	54
D1	20	#6	STR	1'-6"	45
K1	12	#4	STR	3'-11"	31
S1	56	#4	2	6'-8"	249
S2	56	#4	3	4'-5"	165
V1	20	#4	1	4'-2"	56

REINFORCING STEEL (FOR ONE END BENT) 1875 LBS.

CLASS A CONCRETE BREAKDOWN (FOR ONE END BENT)

POUR #1 FOOTING	8.4 C.Y.
POUR #2 WINGS	0.9 C.Y.
TOTAL CLASS A CONCRETE	9.3 C.Y.

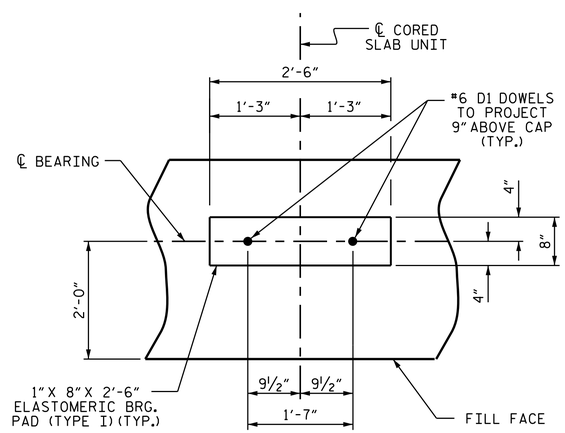

DETAIL "A"

(END BENT No. 1 SHOWN, END BENT No. 2 SIMILAR BY ROTATION)

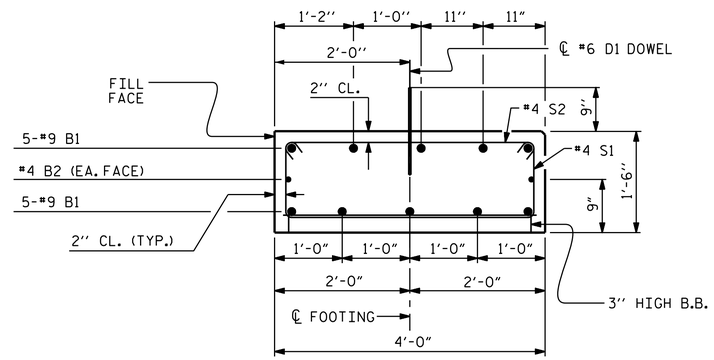

SECTION A-A

PROJECT NO. B-5935

ANSON COUNTY

STATION: 12+54.00 -L-

SHEET 4 OF 4

STATE OF NORTH CAROLINA
DEPARTMENT OF TRANSPORTATION
RALEIGH

SUBSTRUCTURE

END BENT No. 1 & 2 DETAILS

NORTH CAROLINA PROFESSIONAL SEAL 033139 ENGINEER TODD M. GARRISON

DocuSigned by: 61EAF7523943466...

8/3/2015

REVISIONS						SHEET NO.
NO.	BY:	DATE:	NO.	BY:	DATE:	S-12
1			3			TOTAL SHEETS
2			4			17

DRAWN BY : E. K. POPE, P.E. DATE : 2/15
CHECKED BY : T. M. GARRISON, P.E. DATE : 3/15
DESIGN ENGINEER OF RECORD: T.M.GARRISON, P.E. DATE : 3/15

S:\DEV\Squad_D\Anson Co Bridge (17BP_10_R_55)\B5935\Final Plans dgn\B5935_SMU_EB.dgn
tgarrison

STD. NO. EB_30_90S