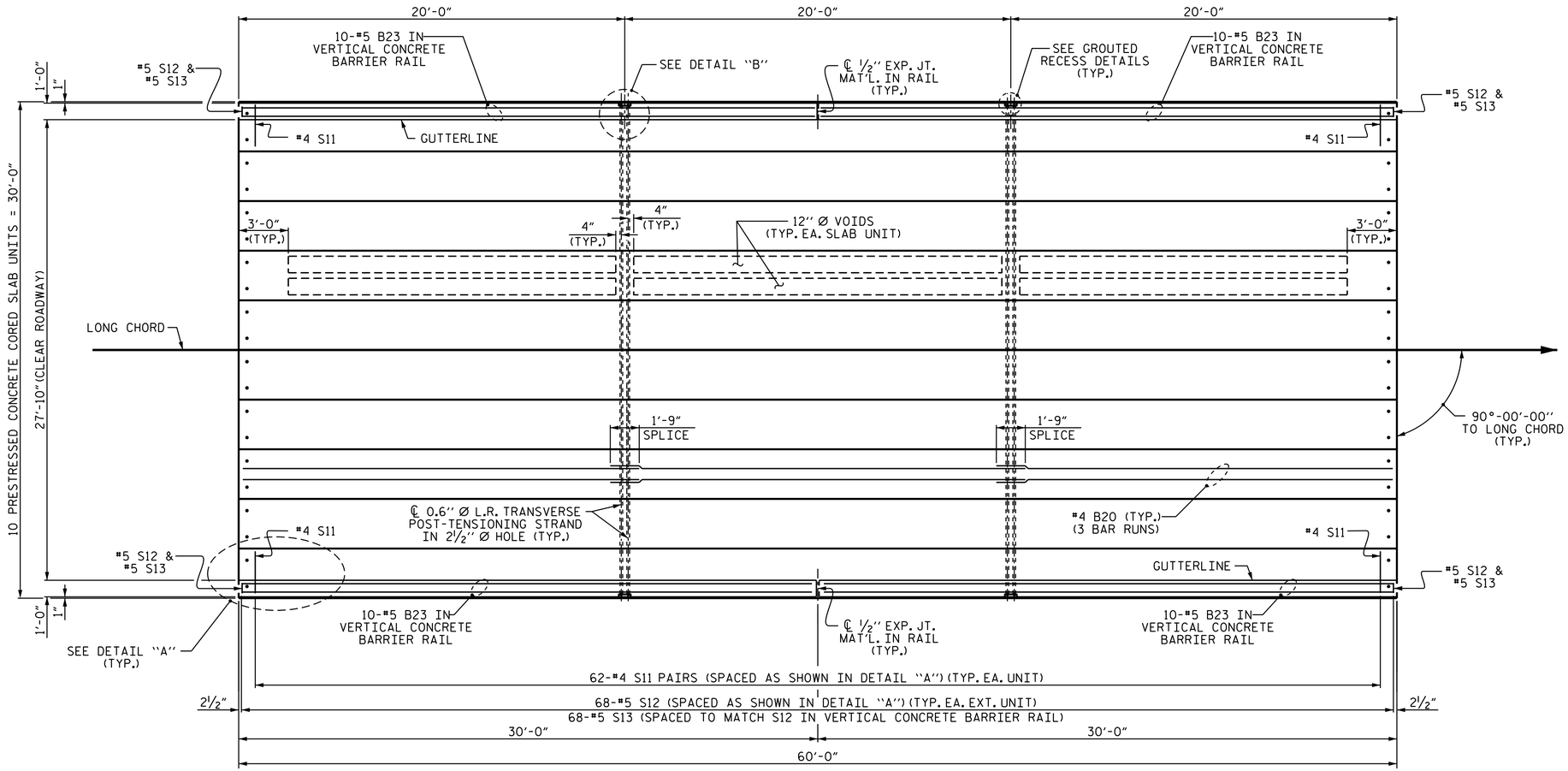

PLAN OF UNIT

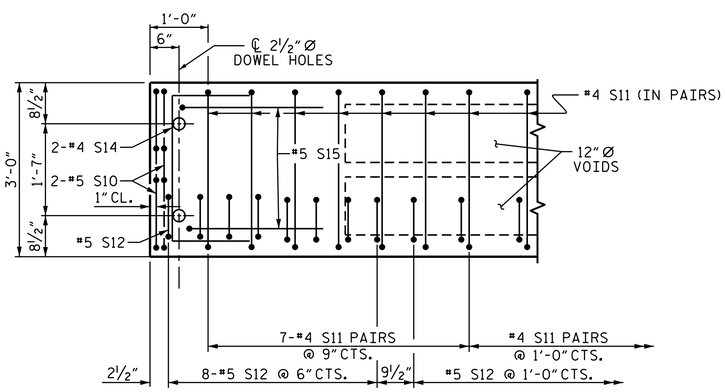

DETAIL "A"

(TYPICAL EACH END OF UNIT)
NOTE: EXTERIOR UNIT SHOWN - INTERIOR UNIT SIMILAR EXCEPT OMIT #5 S12 BARS.

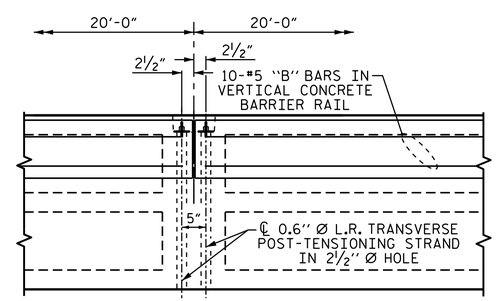

DETAIL "B"

#4 S11 BARS MAY BE SHIFTED AS NECESSARY TO MAINTAIN 1" CLEAR TO GROUTED RECESS AND 2 1/2" Ø TRANSVERSE POST-TENSIONING STRAND HOLES

PROJECT NO. B-5935
ANSON COUNTY
STATION: 12+54.00 -L-

NORTH CAROLINA PROFESSIONAL SEAL 033139 ENGINEER TODD M. GARRISON

DocuSigned by: 61EAF7523943466...
8/3/2015

STATE OF NORTH CAROLINA
DEPARTMENT OF TRANSPORTATION
RALEIGH

PLAN OF 60' UNIT
27'-10" CLEAR ROADWAY
90° SKEW

REVISIONS								SHEET NO.
NO.	BY:	DATE:	NO.	BY:	DATE:			S-6
1			3					TOTAL SHEETS
2			4					17

ASSEMBLED BY : E.K.POPE, P.E.	DATE : 2/15		
CHECKED BY : T.M.GARRISON, P.E.	DATE : 3/15		
DRAWN BY : MAA	6/10	REV. 12/5/11	MAA/AAC
CHECKED BY : MKT	7/10	REV. 8/14	MAA/TMG

17-JUL-2015 10:55
S:\DEV\Squad_D\Anson Co Bridge (17BP_10_R_55)\B5935\Final Plans dgn\B5935_SMU_CS.dgn
tgarrison

STD. NO. 24PCS_30_90S_60L