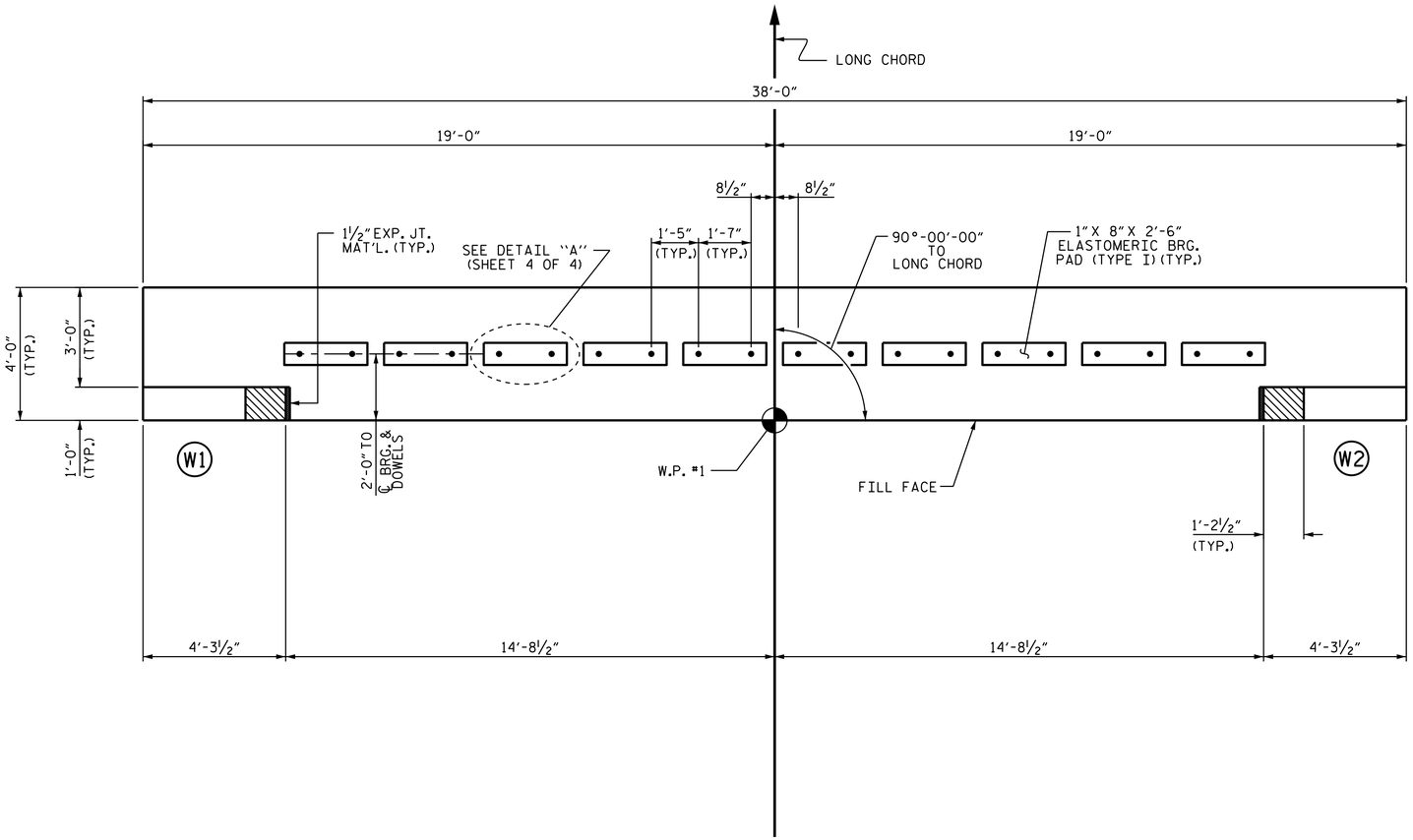

PLAN

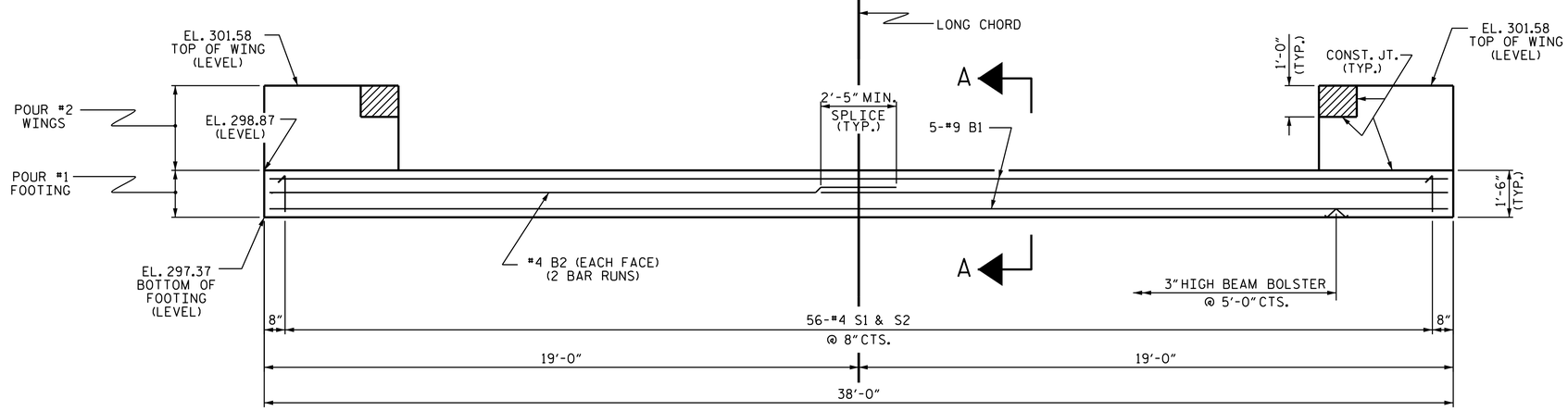

ELEVATION

FOR SECTION A-A, SEE SHEET 4 OF 4.
REINFORCING STEEL IN WINGS NOT SHOWN FOR CLARITY

NOTES

STIRRUPS IN CAP MAY BE SHIFTED AS NECESSARY TO CLEAR DOWELS.

THE CONCRETE IN THE SHADED AREA OF THE WING SHALL BE POURED AFTER THE VERTICAL CONCRETE BARRIER RAIL IS CAST IF SLIP FORMING IS USED.

FOR WING DETAILS, SEE SHEET 3 OF 4.

PROJECT NO. B-5935
ANSON COUNTY
STATION: 12+54.00 -L-

SHEET 1 OF 4

STATE OF NORTH CAROLINA
DEPARTMENT OF TRANSPORTATION
RALEIGH

SUBSTRUCTURE

END BENT No. 1

NORTH CAROLINA PROFESSIONAL SEAL 033139 ENGINEER TODD M. GARRISON

DocuSigned by: 61EAF7523043466...
8/3/2015

REVISIONS								SHEET NO.
NO.	BY:	DATE:	NO.	BY:	DATE:			S-9
1			3					TOTAL SHEETS
2			4					17

DRAWN BY : E. K. POPE, P.E. DATE : 2/15
CHECKED BY : T. M. GARRISON, P.E. DATE : 3/15
DESIGN ENGINEER OF RECORD: T.M.GARRISON, P.E. DATE : 3/15

17-JUL-2015 11:02
S:\DEV\Squad_D\Anson Co Bridge (17BP_10_R_55)\B5935\Final Plans dgn\B5935_SMU_EB.dgn
tgarrison

STD. NO. EB_30_90S