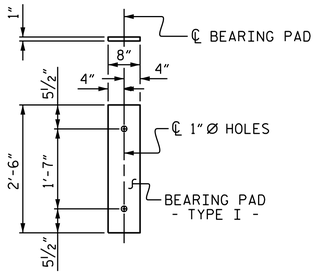

FIXED END
(TYPE I - 20 REQ'D)

ELASTOMERIC BEARING DETAILS

ELASTOMER IN ALL BEARINGS SHALL BE 60 DUROMETER HARDNESS.

DEAD LOAD DEFLECTION AND CAMBER	
	3'-0" x 2'-0"
60' CORED SLAB UNIT	0.6"Ø L.R. STRAND
CAMBER (SLAB ALONE IN PLACE)	1⅞" ↑
DEFLECTION DUE TO SUPERIMPOSED DEAD LOAD ✱✱	½" ↓
FINAL CAMBER	1⅜" ↑

✱✱ INCLUDES FUTURE WEARING SURFACE

CORED SLABS REQUIRED			
	NUMBER	LENGTH	TOTAL LENGTH
60' UNIT			
EXTERIOR C.S.	2	60'-0"	120'-0"
INTERIOR C.S.	8	60'-0"	480'-0"
TOTAL	10		600'-0"

BILL OF MATERIAL FOR ONE 60' CORED SLAB UNIT

				EXTERIOR UNIT		INTERIOR UNIT	
BAR	NUMBER	SIZE	TYPE	LENGTH	WEIGHT	LENGTH	WEIGHT
B20	6	#4	STR	21'-2"	85	21'-2"	85
S10	8	#5	3	4'-9"	40	4'-9"	40
S11	124	#4	3	5'-10"	483	5'-10"	483
✱S12	68	#5	1	5'-7"	396		
S14	4	#4	3	5'-7"	15	5'-7"	15
S15	4	#5	3	7'-1"	30	7'-1"	30
REINFORCING STEEL			LBS.		653		653
✱ EPOXY COATED REINFORCING STEEL			LBS.		396		
6000 P.S.I. CONCRETE			CU. YDS.		10.2		10.2
0.6"Ø L.R. STRANDS			No.		24		24

BAR TYPES

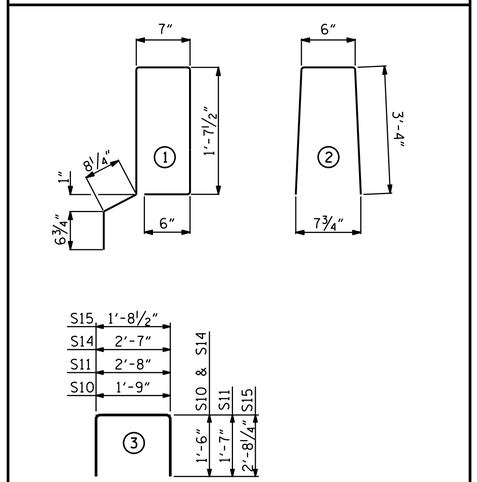

ALL BAR DIMENSIONS ARE OUT TO OUT

BILL OF MATERIAL FOR VERTICAL CONCRETE BARRIER RAIL

BAR	BARS PER PAIR OF EXTERIOR UNITS	TOTAL NO.	SIZE	TYPE	LENGTH	WEIGHT
	60' UNIT					
✱B23	40	40	#5	STR	29'-7"	1234
✱S13	136	136	#5	2	7'-2"	1017
✱ EPOXY COATED REINFORCING STEEL				LBS.		2251
CLASS AA CONCRETE				CU.YDS.		15.5
TOTAL VERTICAL CONCRETE BARRIER RAIL				LN. FT.		120.00

GUTTERLINE ASPHALT THICKNESS & RAIL HEIGHT

	ASPHALT OVERLAY THICKNESS @ MID-SPAN	RAIL HEIGHT @ MID-SPAN
60' UNITS	2⅛"	3'-8⅛"

NOTES

ALL PRESTRESSING STRANDS SHALL BE 7-WIRE LOW RELAXATION GRADE 270 STRANDS AND SHALL CONFORM TO AASHTO M203 EXCEPT FOR SAMPLING REQUIREMENTS WHICH SHALL BE IN ACCORDANCE WITH THE STANDARD SPECIFICATIONS.

ALL REINFORCING STEEL CAST WITH THE CORED SLAB SECTIONS SHALL BE GRADE 60 AND SHALL BE INCLUDED IN THE UNIT PRICE BID FOR PRESTRESSED CONCRETE CORED SLABS.

RECESSES FOR TRANSVERSE STRANDS SHALL BE GROUTED AFTER THE TENSIONING OF THE STRANDS.

THE 2½"Ø DOWEL HOLES AT FIXED ENDS OF SLAB SECTIONS SHALL BE FILLED WITH NON-SHRINK GROUT.

THE BACKER RODS SHALL CONFORM TO THE REQUIREMENTS OF TYPE M BOND BREAKER. SEE SECTION 1028 OF THE STANDARD SPECIFICATIONS.

WHEN CORED SLABS ARE CAST, AN INTERNAL HOLD-DOWN SYSTEM SHALL BE EMPLOYED TO PREVENT VOIDS FROM RISING OR MOVING SIDEWAYS. AT LEAST SIX WEEKS PRIOR TO CASTING CORED SLABS, THE CONTRACTOR SHALL SUBMIT TO THE ENGINEER FOR REVIEW AND COMMENT, DETAILED DRAWINGS OF THE PROPOSED HOLD-DOWN SYSTEM. IN ADDITION TO STRUCTURAL DETAILS, LOCATION AND SPACING OF THE HOLD-DOWNS SHALL BE INDICATED.

THE TRANSFER OF LOAD FROM THE ANCHORAGES TO THE CORED SLAB UNIT SHALL BE DONE WHEN THE CONCRETE HAS REACHED A COMPRESSIVE STRENGTH OF NOT LESS THAN THE REQUIRED STRENGTH SHOWN IN THE "CONCRETE RELEASE STRENGTH" TABLE.

ALL REINFORCING STEEL IN VERTICAL CONCRETE BARRIER RAILS SHALL BE EPOXY COATED.

PRESTRESSING STRANDS SHALL BE CUT FLUSH WITH THE CORED SLAB UNIT ENDS.

APPLY EPOXY PROTECTIVE COATING TO CORED SLAB UNIT ENDS.

GROOVED CONTRACTION JOINTS, ½" IN DEPTH, SHALL BE TOOLED IN ALL EXPOSED FACES OF THE BARRIER RAIL AND IN ACCORDANCE WITH ARTICLE 825-10(B) OF THE STANDARD SPECIFICATIONS. A CONTRACTION JOINT SHALL BE LOCATED AT EACH THIRD POINT BETWEEN BARRIER RAIL EXPANSION JOINTS. ONLY ONE CONTRACTION JOINT IS REQUIRED AT MIDPOINT OF BARRIER RAIL SEGMENTS LESS THAN 20 FEET IN LENGTH AND NO CONTRACTION JOINTS ARE REQUIRED FOR THOSE SEGMENTS LESS THAN 10 FEET IN LENGTH.

FLAME CUTTING OF THE TRANSVERSE POST-TENSIONING STRAND IS NOT ALLOWED.

MAINTAIN A SYMMETRIC TENSION FORCE BETWEEN EACH PAIR OF TRANSVERSE POST TENSIONING STRANDS IN THE DIAPHRAGM.

THE #4 S11 STIRRUPS MAY BE SHIFTED AS NECESSARY TO MAINTAIN 1" CLEAR TO THE GROUTED RECESS.

FOR GROUT FOR STRUCTURES, SEE SPECIAL PROVISIONS.

THE PERMITTED THREADED INSERTS ARE DETAILED AS AN OPTION FOR THE CONTRACTOR TO ATTACH FALSEWORK AND FORMWORK DURING CONSTRUCTION.

THE PERMITTED THREADED INSERTS IN THE EXTERIOR UNITS SHALL BE SIZED BY THE CONTRACTOR, SPACED AT 4'-0" CENTERS AND GALVANIZED IN ACCORDANCE WITH SECTION 1076 OF THE STANDARD SPECIFICATIONS. STAINLESS STEEL THREADED INSERTS MAY BE USED AS AN ALTERNATE.

THE PERMITTED THREADED INSERTS SHALL BE GROUTED BY THE CONTRACTOR IMMEDIATELY FOLLOWING REMOVAL OF THE FALSEWORK.

THE COST OF THE PERMITTED THREADED INSERTS SHALL BE INCLUDED IN THE PRICE BID FOR THE PRECAST UNITS.

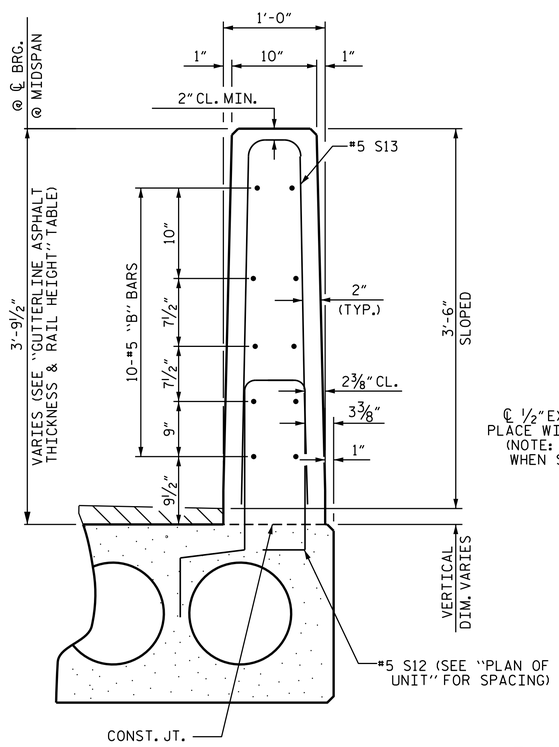

SECTION THRU RAIL

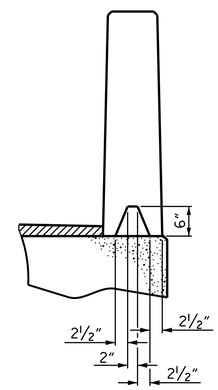

SECTION S-S
AT DAM IN OPEN JOINT
(THIS IS TO BE USED ONLY WHEN SLIP FORM IS USED)

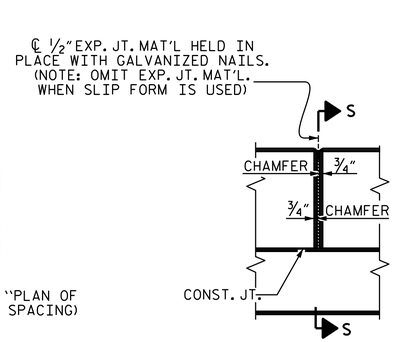

ELEVATION AT EXPANSION JOINTS

VERTICAL CONCRETE BARRIER RAIL DETAILS

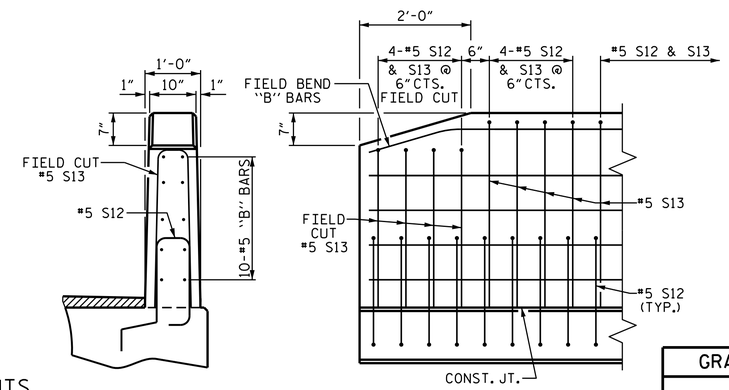

END VIEW

SIDE VIEW

END OF RAIL DETAILS

CONCRETE RELEASE STRENGTH	
UNIT	PSI
60' UNITS	4800

GRADE 270 STRANDS	
	0.6"Ø L.R.
AREA (SQUARE INCHES)	0.217
ULTIMATE STRENGTH (LBS. PER STRAND)	58,600
APPLIED PRESTRESS (LBS. PER STRAND)	43,950

NORTH CAROLINA PROFESSIONAL SEAL 033139 ENGINEER TODD M. GARRISON

DocuSigned by:
61EAF7523943466...
8/3/2015

PROJECT NO. B-5935
ANSON COUNTY
STATION: 12+54.00 -L-

STATE OF NORTH CAROLINA
DEPARTMENT OF TRANSPORTATION
RALEIGH

STANDARD
3'-0" X 2'-0"
PRESTRESSED CONCRETE
CORED SLAB UNIT

ASSEMBLED BY : E.K.POPE, P.E.	DATE : 2/15
CHECKED BY : T.M.GARRISON, P.E.	DATE : 3/15

DRAWN BY : MAA	6/10	REV. 12/11	MAA/AAC
CHECKED BY : MKT	7/10	REV. 8/14	MAA/TMG

REVISIONS						SHEET NO.
NO.	BY:	DATE:	NO.	BY:	DATE:	S-7
1			3			TOTAL SHEETS
2			4			17

17-JUL-2015 10:56
S:\DEV\Squad_D\Anson Co Bridge (17BP_10_R_55)\B5935\FinalPlans dgn\B5935_SMU_CS.dgn
tgarrison

STD. NO. 24PCS3_30_90S