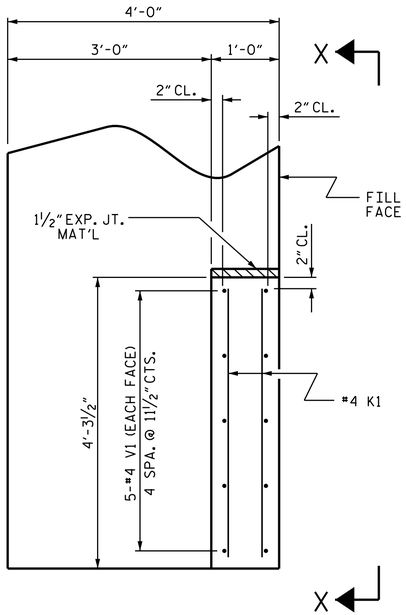

PLAN OF WING (W1)

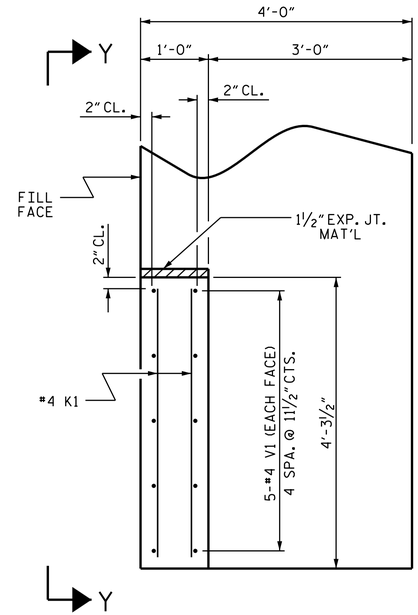

PLAN OF WING (W2)

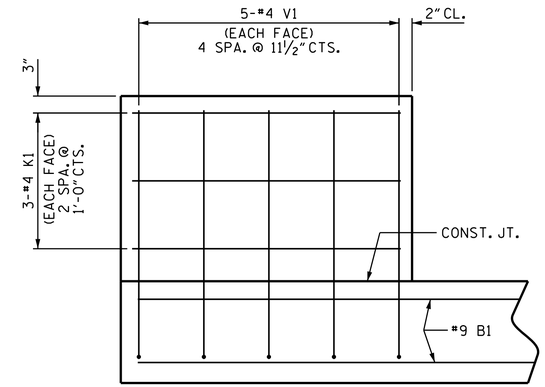

SECTION X-X

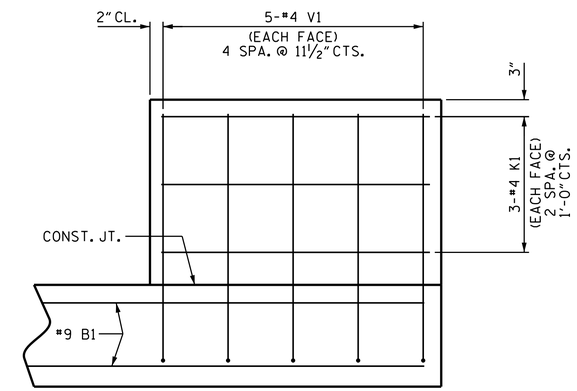

SECTION Y-Y

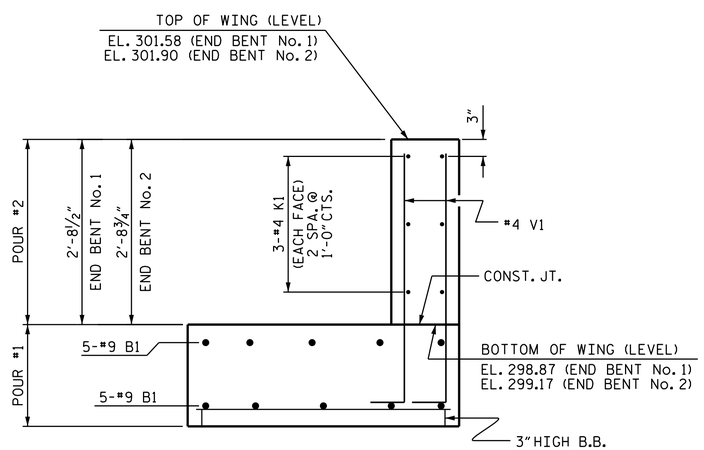

ELEVATION OF WING (W1)

B2, S1, S2, AND D1 BARS NOT SHOWN FOR CLARITY.

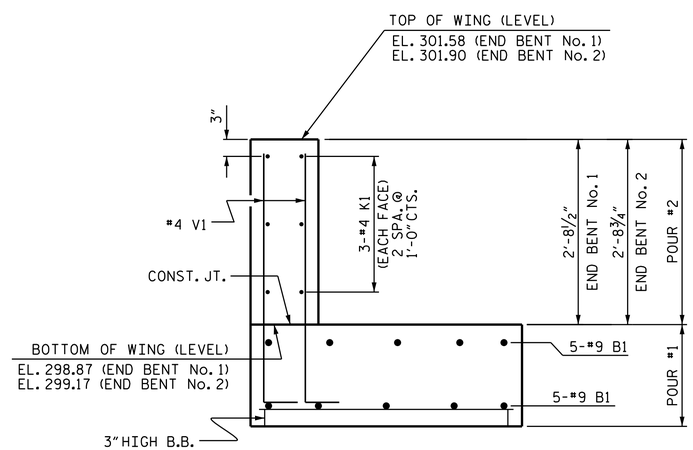

ELEVATION OF WING (W2)

B2, S1, S2, AND D1 BARS NOT SHOWN FOR CLARITY.

WING DETAILS

PROJECT NO. B-5935

ANSON COUNTY

STATION: 12+54.00 -L-

SHEET 3 OF 4

NORTH CAROLINA PROFESSIONAL SEAL 033139 ENGINEER TODD M. GARRISON

DocuSigned by: 61EAF7523943466...

8/3/2015

STATE OF NORTH CAROLINA
DEPARTMENT OF TRANSPORTATION
RALEIGH

SUBSTRUCTURE

END BENT
WING DETAILS

REVISIONS								SHEET NO.
NO.	BY:	DATE:	NO.	BY:	DATE:			S-11
1			3					TOTAL SHEETS
2			4					17

ASSEMBLED BY :	T. M. GARRISON, P.E.	DATE :	3/15
CHECKED BY :	E. K. POPE, P.E.	DATE :	3/15
DESIGN ENGINEER OF RECORD:	T. M. GARRISON, P.E.	DATE :	3/15
DRAWN BY : DGE 02/10	REV. 11/14	MAA/TMG	
CHECKED BY : MKT 02/10			

17-JUL-2015 11:03
S:\DEV\Squad_D\Anson Co Bridge (17BP_10_R_55)\B5935\Final Plans dgn\B5935_SMU_EB.dgn
tgarrison