TIP PROJECT: BD-5110AB

See Sheet 1-A For Index of Sheets
See Sheet 1-B For Standard Symbology Sheet

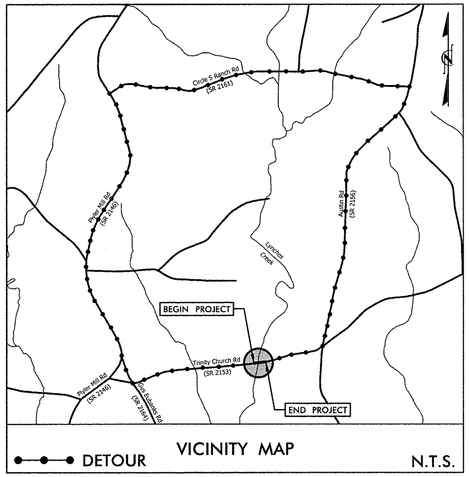

FINAL PLANS

STATE OF NORTH CAROLINA
DIVISION OF HIGHWAYS

UNION COUNTY

LOCATION: BRIDGE #285 OVER LYNCHES CREEK ON SR 2153 (TRINITY CHURCH ROAD)

TYPE OF WORK: GRADING, PAVING, DRAINAGE & STRUCTURE

STATE	STATE PROJECT REFERENCE NO.	SHEET NO.	TOTAL SHEETS
N.C.	BD-5110AB	1	

STATE PROJ. NO.	F.A. PROJ. NO.	DESCRIPTION
45356.1.28	BRZ-2153(3)	P.E.
45356.2.FD28	BRZ-2153(3)	R/W & UTILITIES
45356.3.FD28	BRZ-2153(3)	CONST.

NAD 83 NSRS 2007

BEGIN TIP PROJECT BD-5110AB
-L- STA. 10+25.00

END TIP PROJECT BD-5110AB
-L- STA. 14+90.00

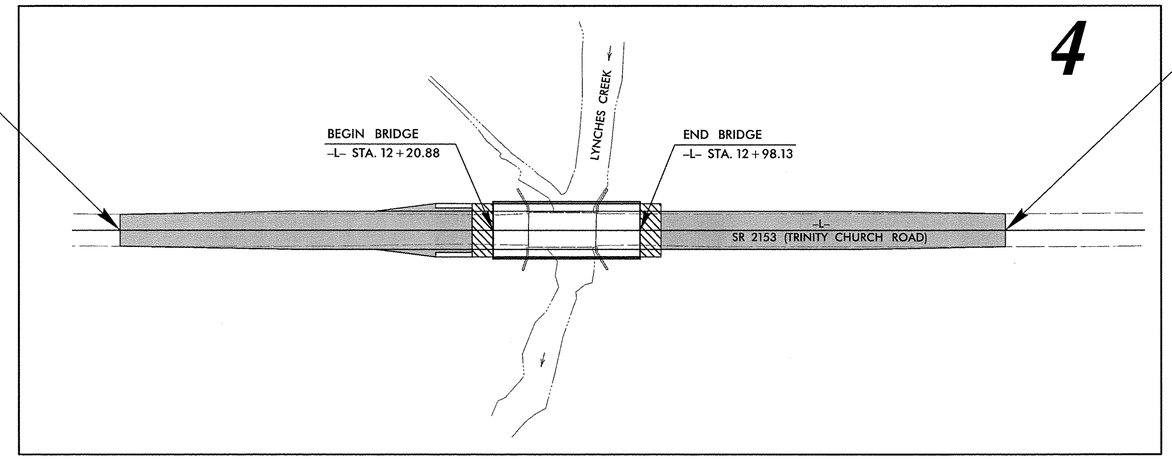

TO S. ROCKY RIVER ROAD (NC 522)

TO WOLF POND ROAD (NC 207)

CONTRACT:

FINAL PLANS
4/15/2014

GRAPHIC SCALES

20 10 0 20 40
PLANS

20 10 0 20 40
PROFILE (HORIZONTAL)

4 2 0 4 8
PROFILE (VERTICAL)

DESIGN DATA

ADT 2013 = 588
ADT 2035 = 1,439
DHV = N/A
D = N/A
T = 6%
V = 55 MPH

FUNC. CLASSIFICATION: LOCAL

PROJECT LENGTH

LENGTH OF ROADWAY TIP PROJECT BD-5110AB = 0.073 MILES
LENGTH OF STRUCTURE TIP PROJECT BD-5110AB = 0.015 MILES
TOTAL LENGTH OF TIP PROJECT BD-5110AB = 0.088 MILES

NCDOT CONTACT: GARLAND HAYWOOD, PE
Division Bridge Manager

PLANS PREPARED FOR THE NCDOT BY:
STV/RALPH WHITEHEAD ASSOCIATES, INC.
900 West Trade St., Ste. 715, Charlotte NC. 28202
NC License Number F-0991

2012 STANDARD SPECIFICATIONS

RIGHT OF WAY DATE: DECEMBER 18, 2012

LETTING DATE: ~~MAY 21, 2014~~ NOVEMBER 5, 2014

NIKKI T. HONEYCUTT, PE
PROJECT ENGINEER

JOSEPH BOULOS, EI
PROJECT DESIGNER

HYDRAULICS ENGINEER
NORTH CAROLINA PROFESSIONAL SEAL 038053 ENGINEER DAVID C. MORRISON
SIGNATURE: P.E. 4/15/14

ROADWAY DESIGN ENGINEER
NORTH CAROLINA PROFESSIONAL SEAL 039234 ENGINEER NIKKI T. HONEYCUTT
SIGNATURE: P.E. 15APR14

STATE OF NORTH CAROLINA DEPARTMENT OF TRANSPORTATION

PROJECT REFERENCE NO.	SHEET NO.
BD-5110AB	1-A
R/W SHEET NO.	

STV/ Ralph Whitehead Associates, Inc.
900 West Trade St., Ste. 715
Charlotte, NC 28202
NC License Number F-0991

ROADWAY DESIGN ENGINEER

NORTH CAROLINA PROFESSIONAL SEAL 039234 ENGINEER NIKKI T. HONEYCUTT
1/14/2014

INDEX OF SHEETS

SHEET NUMBER	SHEET
1	TITLE SHEET
1-A	INDEX OF SHEETS, GENERAL NOTES, AND LIST OF STANDARD DRAWINGS
1-B	CONVENTIONAL SYMBOLS
2	DETAILS
3	SUMMARIES AND TYPICALS
4	PLAN AND PROFILE SHEET
TCP-1	TRAFFIC CONTROL PLANS
EC-1 THRU EC-4	EROSION CONTROL PLANS
UO-1 THRU UO-2	UTILITIES BY OTHERS PLANS
X-1 THRU X-2	CROSS-SECTIONS

GENERAL NOTES

GENERAL NOTES: 2012 SPECIFICATIONS
EFFECTIVE: 01-01-2012

GRADE LINE:
GRADING AND SURFACING:

THE GRADE LINES SHOWN DENOTE THE FINISHED ELEVATION OF THE PROPOSED SURFACING AT GRADE POINTS SHOWN ON THE TYPICAL SECTIONS. GRADE LINES MAY BE ADJUSTED AT THEIR BEGINNING AND ENDING AND AT STRUCTURES AS DIRECTED BY THE ENGINEER IN ORDER TO SECURE A PROPER TIE-IN.

CLEARING:

CLEARING ON THIS PROJECT SHALL BE PERFORMED TO THE LIMITS ESTABLISHED BY METHOD II.

SUPERELEVATION:

ALL CURVES ON THIS PROJECT SHALL BE SUPERELEVATED IN ACCORDANCE WITH STD. NO. 225.04 USING THE RATE OF SUPERELEVATION AND RUNOFF SHOWN ON THE PLANS. SUPERELEVATION IS TO BE REVOLVED ABOUT THE GRADE POINTS SHOWN ON THE TYPICAL SECTIONS.

SHOULDER CONSTRUCTION:

ASPHALT, EARTH, AND CONCRETE SHOULDER CONSTRUCTION ON THE HIGH SIDE OF SUPERELEVATED CURVES SHALL BE IN ACCORDANCE WITH STD. NO. 560.01.

GUARDRAIL:

THE GUARDRAIL LOCATIONS SHOWN ON THE PLANS MAY BE ADJUSTED DURING CONSTRUCTION AS DIRECTED BY THE ENGINEER. THE CONTRACTOR SHOULD CONSULT WITH THE ENGINEER PRIOR TO ORDERING GUARDRAIL MATERIAL.

END BENTS:

THE ENGINEER SHALL CHECK THE STRUCTURE END BENT PLANS, DETAILS, AND CROSS-SECTION PRIOR TO SETTING OF THE SLOPE STAKES FOR THE EMBANKMENT OR EXCAVATION APPROACHING A BRIDGE.

RIGHT-OF-WAY MARKERS:

ALL RIGHT-OF-WAY MARKERS ON THIS PROJECT SHALL BE PLACED BY CONTRACT.

STANDARD DRAWINGS

2012 ROADWAY ENGLISH STANDARD DRAWINGS EFF. January, 2012

The following Roadway Standards as appear in "Roadway Standard Drawings" Highway Design Branch - N. C. Department of Transportation - Raleigh, N. C., Dated January, 2012 are applicable to this project and by reference hereby are considered a part of these plans:

STD.NO.	TITLE
DIVISION 2 - EARTHWORK	
200.02	Method of Clearing - Method II
225.02	Guide for Grading Subgrade - Secondary and Local
225.04	Method of Obtaining Superelevation - Two Lane Pavement
DIVISION 5 - SUBGRADE, BASES AND SHOULDERS	
560.01	Method of Shoulder Construction - High Side of Superelevated Curve - Method I
DIVISION 8 - INCIDENTALS	
840.29	Frames and Narrow Slot Flat Grates
840.35	Traffic Bearing Grated Drop Inlet
846.01	Concrete Curb, Gutter and Curb & Gutter
862.01	Guardrail Placement
862.02	Guardrail Installation
862.d.03	Structure Anchor Units
876.02	Guide for Rip Rap at Pipe Outlets
DIVISION 11 - WORK ZONE TRAFFIC CONTROL	
1101.03	Temporary Road Closures
1110.01	Stationary Work Zone Signs - Mounting Height & Lateral Clearance
1145.01	Barricades - Type III
DIVISION 16 - EROSION CONTROL AND ROADSIDE DEVELOPMENT	
1605.01	Temporary Silt Fence
1606.01	Special Sediment Control Fence
1607.01	Gravel Construction Entrance
1622.01	Guide for Temporary Berms and Slope Drains
1630.04	Stilling Basin For Pumped Effluent
1630.06	Special Stilling Basin
1631.01	Matting Installation
1632.03	Rock Inlet Sediment Trap Type C
1633.01	Temporary Rock Silt Check Type A

04/16/11

PROJECT REFERENCE NO.	SHEET NO.
BD-5110AB	1-B

Note: Not to Scale

S.U.E. = Subsurface Utility Engineering

STATE OF NORTH CAROLINA
DIVISION OF HIGHWAYS

CONVENTIONAL PLAN SHEET SYMBOLS

BOUNDARIES AND PROPERTY:

- State Line
- County Line
- Township Line
- City Line
- Reservation Line
- Property Line
- Existing Iron Pin — EIP
- Property Corner
- Property Monument — ECM
- Parcel/Sequence Number — 123
- Existing Fence Line
- Proposed Woven Wire Fence
- Proposed Chain Link Fence
- Proposed Barbed Wire Fence
- Existing Wetland Boundary — WLB
- Proposed Wetland Boundary — WLB
- Existing Endangered Animal Boundary — EAB
- Existing Endangered Plant Boundary — EPB
- Known Soil Contamination: Boundary or Site
- Potential Soil Contamination: Boundary or Site

BUILDINGS AND OTHER CULTURE:

- Gas Pump Vent or U/G Tank Cap
- Sign — S
- Well — W
- Small Mine
- Foundation
- Area Outline
- Cemetery
- Building
- School
- Church
- Dam

HYDROLOGY:

- Stream or Body of Water
- Hydro, Pool or Reservoir
- Jurisdictional Stream — JS
- Buffer Zone 1 — BZ 1
- Buffer Zone 2 — BZ 2
- Flow Arrow
- Disappearing Stream
- Spring
- Wetland
- Proposed Lateral, Tail, Head Ditch — FLOW
- False Sump

RAILROADS:

- Standard Gauge — CSX TRANSPORTATION
- RR Signal Milepost — MILEPOST 35
- Switch — SWITCH
- RR Abandoned
- RR Dismantled

RIGHT OF WAY:

- Baseline Control Point
- Existing Right of Way Marker
- Existing Right of Way Line
- Proposed Right of Way Line — RW
- Proposed Right of Way Line with Iron Pin and Cap Marker — RW
- Proposed Right of Way Line with Concrete or Granite Marker — RW
- Existing Control of Access — CA
- Proposed Control of Access — CA
- Existing Easement Line — E
- Proposed Temporary Construction Easement — E
- Proposed Temporary Drainage Easement — TDE
- Proposed Permanent Drainage Easement — PDE
- Proposed Permanent Drainage / Utility Easement — DUE
- Proposed Permanent Utility Easement — PUE
- Proposed Temporary Utility Easement — TUE
- Proposed Aerial Utility Easement — AUE
- Proposed Permanent Easement with Iron Pin and Cap Marker

ROADS AND RELATED FEATURES:

- Existing Edge of Pavement
- Existing Curb
- Proposed Slope Stakes Cut — C
- Proposed Slope Stakes Fill — F
- Proposed Curb Ramp — CR
- Curb Cut Future Ramp — CCFR
- Existing Metal Guardrail
- Proposed Guardrail
- Existing Cable Guiderail
- Proposed Cable Guiderail
- Equality Symbol
- Pavement Removal

VEGETATION:

- Single Tree
- Single Shrub
- Hedge
- Woods Line
- Orchard
- Vineyard — Vineyard

EXISTING STRUCTURES:

MAJOR:

- Bridge, Tunnel or Box Culvert — CONC
- Bridge Wing Wall, Head Wall and End Wall — CONC WW

MINOR:

- Head and End Wall — CONC HW
- Pipe Culvert
- Footbridge
- Drainage Box: Catch Basin, DI or JB — CB
- Paved Ditch Gutter
- Storm Sewer Manhole — S
- Storm Sewer — S

UTILITIES:

POWER:

- Existing Power Pole
- Proposed Power Pole
- Existing Joint Use Pole
- Proposed Joint Use Pole
- Power Manhole — P
- Power Line Tower
- Power Transformer
- U/G Power Cable Hand Hole
- H-Frame Pole
- Recorded U/G Power Line — P
- Designated U/G Power Line (S.U.E.*) — P

TELEPHONE:

- Existing Telephone Pole
- Proposed Telephone Pole
- Telephone Manhole — T
- Telephone Booth
- Telephone Pedestal — T
- Telephone Cell Tower
- U/G Telephone Cable Hand Hole — HH
- Recorded U/G Telephone Cable — T
- Designated U/G Telephone Cable (S.U.E.*) — T
- Recorded U/G Telephone Conduit — TC
- Designated U/G Telephone Conduit (S.U.E.*) — TC
- Recorded U/G Fiber Optics Cable — T FO
- Designated U/G Fiber Optics Cable (S.U.E.*) — T FO

WATER:

- Water Manhole — W
- Water Meter
- Water Valve
- Water Hydrant
- Recorded U/G Water Line — W
- Designated U/G Water Line (S.U.E.*) — W
- Above Ground Water Line — A/G Water

TV:

- TV Satellite Dish
- TV Pedestal — C
- TV Tower
- U/G TV Cable Hand Hole — HH
- Recorded U/G TV Cable — TV
- Designated U/G TV Cable (S.U.E.*) — TV
- Recorded U/G Fiber Optic Cable — TV FO
- Designated U/G Fiber Optic Cable (S.U.E.*) — TV FO

GAS:

- Gas Valve
- Gas Meter
- Recorded U/G Gas Line — G
- Designated U/G Gas Line (S.U.E.*) — G
- Above Ground Gas Line — A/G Gas

SANITARY SEWER:

- Sanitary Sewer Manhole
- Sanitary Sewer Cleanout
- U/G Sanitary Sewer Line — SS
- Above Ground Sanitary Sewer — A/G Sanitary Sewer
- Recorded SS Forced Main Line — FSS
- Designated SS Forced Main Line (S.U.E.*) — FSS

MISCELLANEOUS:

- Utility Pole
- Utility Pole with Base
- Utility Located Object
- Utility Traffic Signal Box — S
- Utility Unknown U/G Line — ?UTL
- U/G Tank; Water, Gas, Oil
- Underground Storage Tank, Approx. Loc. — UST
- A/G Tank; Water, Gas, Oil
- Geoenvironmental Boring
- U/G Test Hole (S.U.E.*)
- Abandoned According to Utility Records — AATUR
- End of Information — E.O.I.

STATE OF NORTH CAROLINA
DEPT. OF TRANSPORTATION
DIVISION OF HIGHWAYS
RALEIGH, N.C.

ENGLISH DETAIL DRAWING FOR
STRUCTURE ANCHOR UNITS
GUARDRAIL ANCHOR UNIT, TYPE III FOR ATTACHMENT TO RAIL ON BRIDGE - SUB REGIONAL TIER

SHEET 2 OF 7
862d03

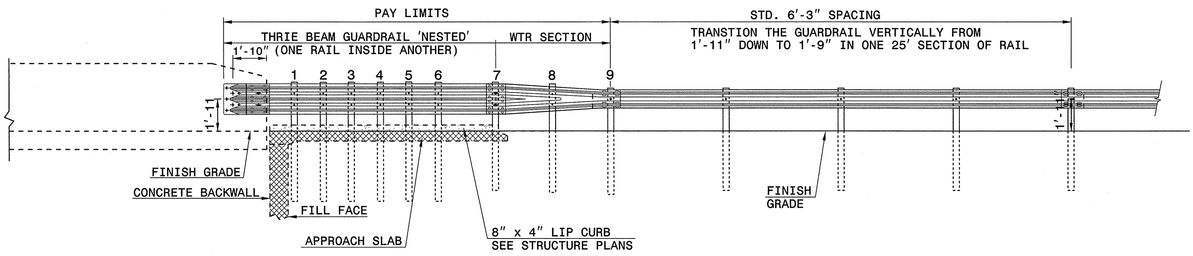

ELEVATION

NOTE:
**POST NOT REQUIRED FOR SKEW ANGLES GREATER THAN 150° OR LESS THAN 30° UNLESS OTHERWISE DIRECTED BY THE ENGINEER.
*THE DISTANCE FROM END OF BRIDGE RAIL TO CENTER LINE OF THE FIRST POST SHOULD BE 11½" IF CONCRETE BACKWALL IS NOT PRESENT.
-SHOULDER BERM GUTTER MUST BE INSTALLED TO THE LIMITS 8" x 4" LIP CURB IS SHOWN IF ANCHOR UNIT IS NOT ADJACENT TO AN APPROACH SLAB.
-MEASURE GUARDRAIL HEIGHT FROM THE TOP OF ADJACENT SURFACE (SHOULDER, BERM, OR GUTTER).
-LAP JOINTS IN THE DIRECTION OF TRAFFIC FLOW.
-SEE SHEET 5 FOR POST SECTIONS 1 THRU 9.

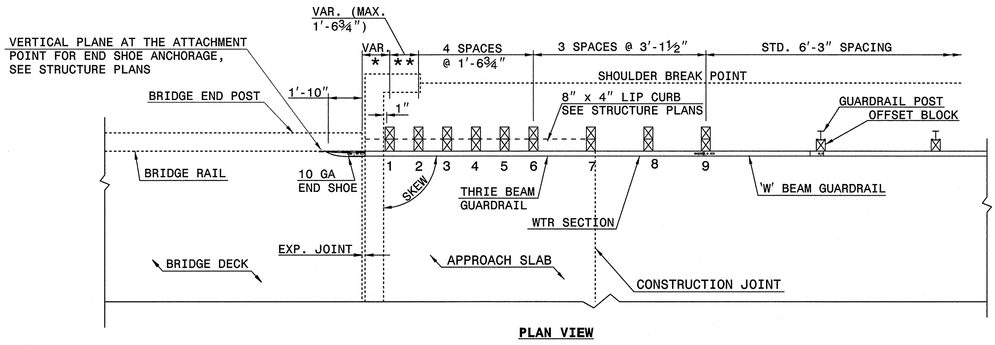

PLAN VIEW

GUARDRAIL ANCHOR UNIT, TYPE III FOR ATTACHMENT TO RAIL ON BRIDGE - SUB REGIONAL TIER

STATE OF NORTH CAROLINA
DEPT. OF TRANSPORTATION
DIVISION OF HIGHWAYS
RALEIGH, N.C.

ENGLISH DETAIL DRAWING FOR
STRUCTURE ANCHOR UNITS
GUARDRAIL ANCHOR UNIT, TYPE III FOR ATTACHMENT TO RAIL ON BRIDGE - SUB REGIONAL TIER

SHEET 2 OF 7
862d03

STATE OF NORTH CAROLINA
DEPT. OF TRANSPORTATION
DIVISION OF HIGHWAYS
RALEIGH, N.C.

ENGLISH DETAIL DRAWING FOR
STRUCTURE ANCHOR UNITS
GUARDRAIL ANCHOR UNIT, TYPE III

SHEET 3 OF 7
862d03

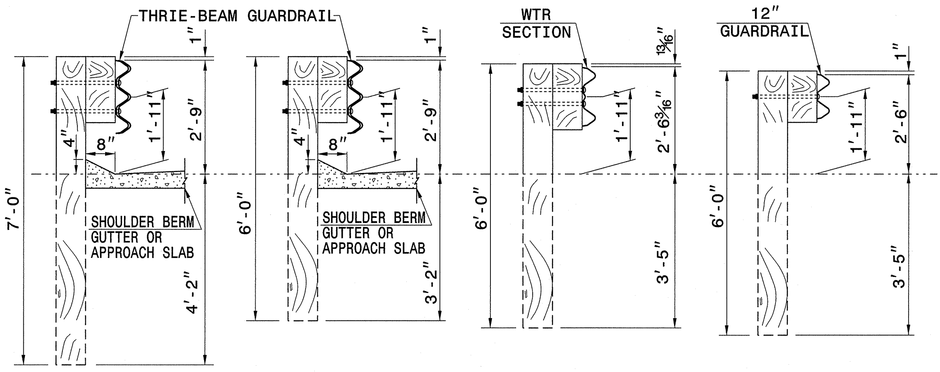

SECTION OF THRIE BEAM POSTS 1 THRU 6

SECTION OF THRIE BEAM POST 7

SECTION OF WTR BEAM POST 8

SECTION OF 'W' BEAM POST 9

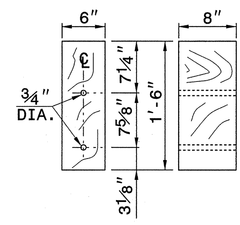

THRIE BEAM OFFSET BLOCK

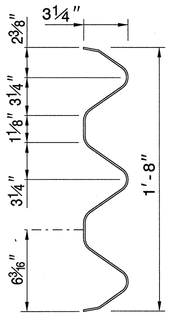

THRIE-BEAM SECTION

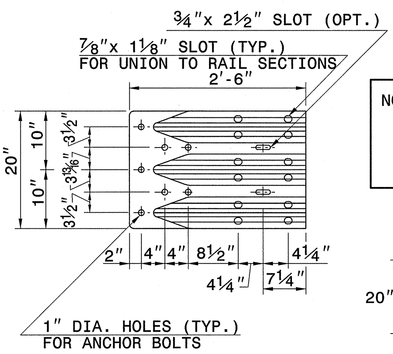

END SHOE

NOTE: THE MID POST AND OFFSET BLOCK OF THE WTR SECTION WILL REQUIRE SPECIAL BOLT HOLE DRILLING IN THE THRIE BEAM OFFSET BLOCK AND LINE POST.

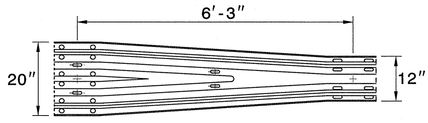

WTR SECTION
ELEVATION VIEW

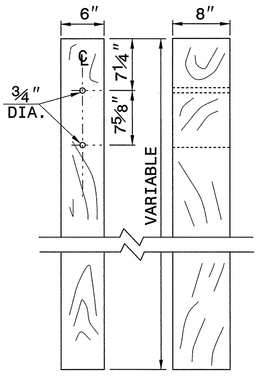

THRIE BEAM LINE POST

STATE OF NORTH CAROLINA
DEPT. OF TRANSPORTATION
DIVISION OF HIGHWAYS
RALEIGH, N.C.

ENGLISH DETAIL DRAWING FOR
STRUCTURE ANCHOR UNITS
GUARDRAIL ANCHOR UNIT, TYPE III

SHEET 3 OF 7
862d03

CONTRACT STANDARDS AND DEVELOPMENT UNIT
Office 919-707-6950 FAX 919-250-4119

SEE TITLE BLOCK

ORIGINAL BY: J. HOWERTON DATE: 06-22-12
MODIFIED BY: DATE:
CHECKED BY: DATE:
FILE SPEC.:

PROJECT REFERENCE NO. BD-5110AB
SHEET NO. 2

DIVISION OF HIGHWAYS
STATE OF NORTH CAROLINA

PROJECT REFERENCE NO.	SHEET NO.
BD-5110AB	3
R/W SHEET NO.	

PAVEMENT DESIGN ENGINEER	ROADWAY DESIGN ENGINEER	HYDRAULICS ENGINEER
PAVEMENT DESIGN PROVIDED BY NCDOT	NORTH CAROLINA PROFESSIONAL SEAL 039234 ENGINEER NIKKI T. HONEYCUTT 3/11/14	NORTH CAROLINA PROFESSIONAL SEAL 038054 ENGINEER DAVID C. MORRISON 3/11/14

STV / Ralph Whitehead Associates, Inc.
900 West Trade St., Ste. 715
Charlotte, NC 28202
NC License Number F-0991

EARTHWORK SUMMARY (IN CUBIC YARDS)

CHAIN	FROM STATION	TO STATION	SIDE	UNCL. EXCAVATION	UNDERCUT	EMBT+%	BORROW	WASTE
-L-	10+25.00	12+20.88	LT & RT	2		420	418	
SUBTOTAL SUMMARY NO. 1				2		420	418	
-L-	12+98.13	14+90.00	LT & RT	12		559	547	
SUBTOTAL SUMMARY NO. 2				12		559	547	
SUBTOTAL SUMMARY 1-2				14		979	965	
LOSS DUE TO CLEARING AND GRUBBING							230	
PROJECT TOTAL				14		979	1,195	
WASTE IN LIEU OF BORROW								
ESTIMATE 5% FOR TOPSOIL ON BORROW PITS							60	
GRAND TOTAL				14		979	1,255	
SAY				15			1,260	

NOTE: Earthwork quantities are calculated by the Roadway Design Unit. These earthwork quantities are based in part on subsurface data provided by the Geotechnical Engineering Unit.

Approximate quantities only. Unclassified Excavation, Borrow Excavation, Fine Grading, Clearing and Grubbing, Breaking of Existing Pavement, and Removal of Existing Pavement will be paid for at the contract lump sum price for "Grading."

	PAVEMENT SCHEDULE
C1	PROP. APPROX. 1.5" ASPHALT CONCRETE SURFACE COURSE, TYPE S9.5B, AT AN AVERAGE RATE OF 168 LBS. PER SQ. YD.
C2	PROP. VAR. DEPTH ASPHALT CONCRETE SURFACE COURSE, TYPE S9.5B, AT AN AVERAGE RATE OF 112 LBS. PER SQ. YD. PER 1" DEPTH. TO BE PLACED IN LAYERS NOT LESS THAN 1.5" IN DEPTH OR GREATER THAN 2.0" IN DEPTH.
D1	PROP. APPROX. 3.5" ASPHALT CONCRETE INTERMEDIATE COURSE, TYPE I19.0B, AT AN AVERAGE RATE OF 399 LBS. PER SQ. YD.
D2	PROP. VAR. DEPTH ASPHALT CONCRETE INTERMEDIATE COURSE, TYPE I19.0B, AT AN AVERAGE RATE OF 114 LBS. PER SQ. YD. PER 1" DEPTH. TO BE PLACED IN LAYERS NOT LESS THAN 2.5" IN DEPTH OR GREATER THAN 4" IN DEPTH.
E1	PROP. APPROX. 3" ASPHALT CONCRETE BASE COURSE, TYPE B25.0B, AT AN AVERAGE RATE OF 342 LBS. PER SQ. YD.
E2	PROP. VAR. DEPTH ASPHALT CONCRETE BASE COURSE, TYPE B25.0B, AT AN AVERAGE RATE OF 114 LBS. PER SQ. YD. PER 1" DEPTH. TO BE PLACED IN LAYERS NOT LESS THAN 3.0" IN DEPTH OR GREATER THAN 5.5" IN DEPTH.
R	CONCRETE SHOULDER BERM GUTTER
T	EARTH MATERIAL
U	EXISTING PAVEMENT
W	PAVEMENT WEDGING

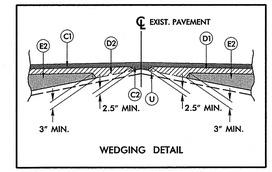

WEDGING DETAIL

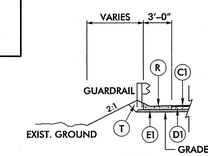

DETAIL A
-L- STA. 11+90.75 TO 12+09.88 LT. & RT.

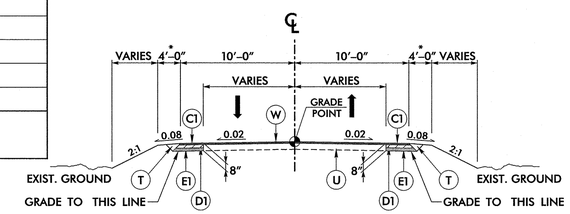

TYPICAL SECTION 1
-L- STA. 10+25.00 TO 11+25.00
-L- STA. 14+25.00 TO 14+90.00

* 7'-0" WITH GUARDRAIL
** ALL PAVEMENT SLOPES ARE 1:1 UNLESS SHOWN OTHERWISE.

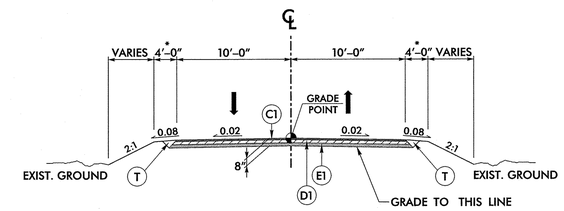

TYPICAL SECTION 2
-L- STA. 11+25.00 TO 12+20.88 (BEGIN BRIDGE)
-L- STA. 12+98.13 (END BRIDGE) TO 14+25.00

* 7'-0" WITH GUARDRAIL
** ALL PAVEMENT SLOPES ARE 1:1 UNLESS SHOWN OTHERWISE.

LIST OF PIPES, ENDWALLS, ETC. (FOR PIPES 48 INCHES & UNDER)

| STATION | LOCATION (LT, RT, OR CL)* | STRUCTURE NO. FROM | STRUCTURE NO. TO | TOP ELEVATION | INVERT ELEVATION | INVERT ELEVATION | SLOPE CRITICAL | DRAINAGE PIPE (RCP, CSP, CAAP, HDPE, or PVC) SIZE 12" | 15" | 18" | 24" | 30" | 36" | 42" | 48" | DO NOT USE RCP | DO NOT USE CSP | DO NOT USE CAAP | DO NOT USE HDPE | C.S. PIPE SIZE 12" | 15" | 18" | 24" | 30" | 36" | 42" | 48" | THICKNESS OR GAUGE .064 | .064 | .064 | .064 | .079 | .079 | .109 | .109 | R.C. PIPE CLASS III 12" | 15" | 18" | 24" | 30" | 36" | 42" | 48" | R.C. PIPE CLASS IV 12" | 15" | 18" | 24" | 30" | 36" | 42" | 48" | *** R.C. PIPE (CLASS V) | **** RC PIPE CULVERTS, CONTRACTOR DESIGN | ***** RC PIPE CULVERTS, CONTRACTOR DESIGN | 15" DRAINAGE PIPE | 18" DRAINAGE PIPE | ENDWALLS STD. 838.01 OR STD. 838.11 (UNLESS NOTED OTHERWISE) CU. YARDS R.C.P. | C.S.P. | QUANTITIES FOR DRAINAGE STRUCTURES PER EACH (0' THRU 5.0') | LIN. FT. A 5.0' THRU 10.0' | LIN. FT. B 10.0' AND ABOVE | *TOTAL L.F. FOR PAY QUANTITY SHALL BE COL. 'A' + (1.3 X COL. 'B') | C.B. STD. 840.01 OR STD. 840.02 | FRAME, GRATES, AND HOOD STANDARD 840.03 TYPE OF GRATE E | F | G | CONCRETE TRANSITIONAL SECTION DROP INLET | CATCH BASIN | D.I. STD. 840.14 OR STD. 840.15 | D.I. FRAME AND GRATE STD. 840.16 | G.D.I. TYPE "A" STD. 840.17 OR 840.26 | G.D.I. TYPE "B" STD. 840.18 OR 840.27 | G.D.I. TYPE "D" STD. 840.19 OR 840.28 | TRAFFIC BEARING G.D.I. STD. 840.35 | G.D.I. FRAME WITH GRATE STD. 840.20 | G.D.I. FRAME WITH TWO GRATES STD. 840.22 | G.D.I. FRAME WITH GRATE STD. 840.24 | G.D.I. (N.S.) FRAME WITH TWO GRATES STD. 840.29 | J.B. STD. 840.31 OR 840.32 | SIDE DRAIN PIPE ELBOWS NO. & SIZE | CONC. & BRICK PIPE PLUG, C.Y. STD. 840.71 | CONC. COLLARS CL. "B" C.Y. STD. 840.72 | PIPE REMOVAL LIN. FT. | REMARKS |
|---|---|---|---|---|---|---|---|---

PROJECT REFERENCE NO.	SHEET NO.
BD-5110AB	4
R/W SHEET NO.	

ROADWAY DESIGN ENGINEER: NORTH CAROLINA PROFESSIONAL SEAL 039234 ENGINEER NIKKI T. HONEYCUTT — 3/12/14

HYDRAULICS ENGINEER: NORTH CAROLINA PROFESSIONAL SEAL 038053 ENGINEER DAVIN C. MORRISON — 3/12/14

STV / Ralph Whitehead Associates, Inc.
900 West Trade St., Ste. 715
Charlotte, NC 28202
NC License Number F-0991

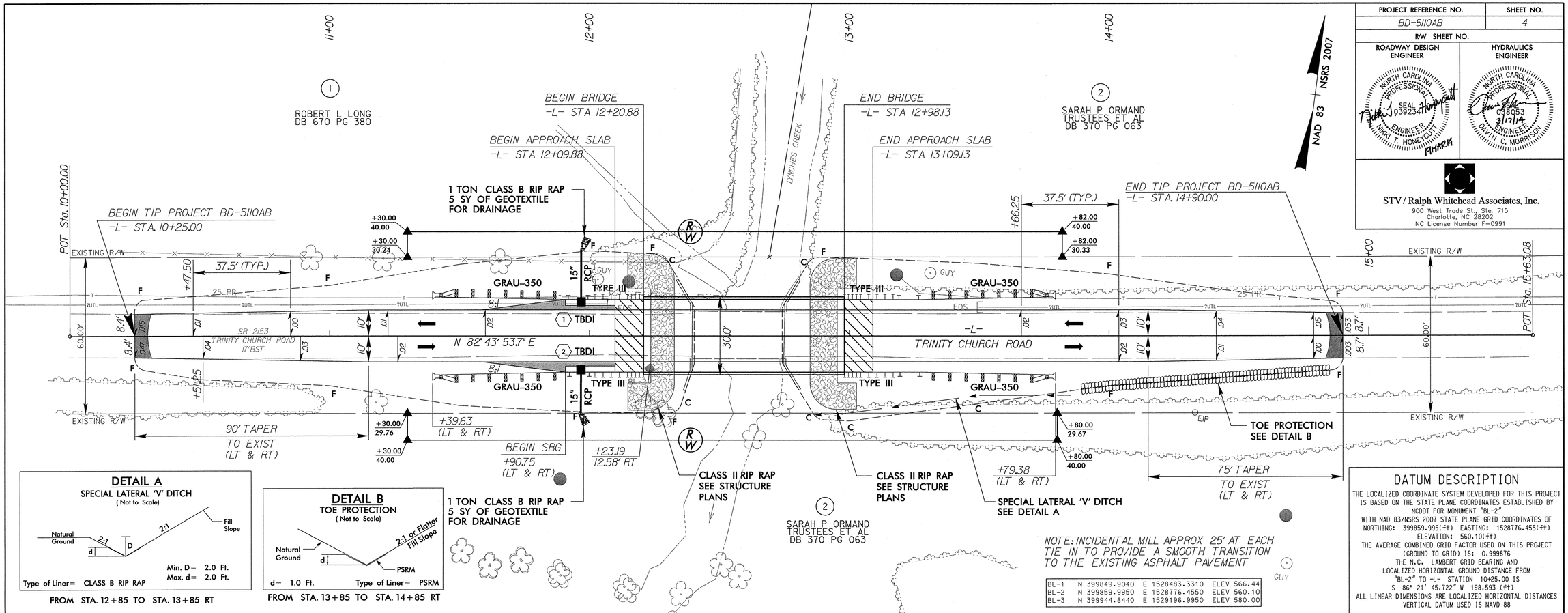

BL-1	N 399849.9040	E 1528483.3310	ELEV 566.44
BL-2	N 399859.9950	E 1528776.4550	ELEV 560.10
BL-3	N 399944.8440	E 1529196.9950	ELEV 580.00

DETAIL A
SPECIAL LATERAL 'V' DITCH
(Not to Scale)

Min. D= 2.0 Ft.
Max. d= 2.0 Ft.
Type of Liner= CLASS B RIP RAP

FROM STA. 12+85 TO STA. 13+85 RT

DETAIL B
TOE PROTECTION
(Not to Scale)

d= 1.0 Ft. Type of Liner= PSRM

FROM STA. 13+85 TO STA. 14+85 RT

DATUM DESCRIPTION

THE LOCALIZED COORDINATE SYSTEM DEVELOPED FOR THIS PROJECT IS BASED ON THE STATE PLANE COORDINATES ESTABLISHED BY NCDOT FOR MONUMENT "BL-2"
WITH NAD 83/NSRS 2007 STATE PLANE GRID COORDINATES OF
NORTHING: 399859.995(ft) EASTING: 1528776.455(ft)
ELEVATION: 560.10(ft)
THE AVERAGE COMBINED GRID FACTOR USED ON THIS PROJECT (GROUND TO GRID) IS: 0.999876
THE N.C. LAMBERT GRID BEARING AND LOCALIZED HORIZONTAL GROUND DISTANCE FROM "BL-2" TO -L- STATION 10+25.00 IS
S 86° 21' 45.722" W 198.593 (ft)
ALL LINEAR DIMENSIONS ARE LOCALIZED HORIZONTAL DISTANCES
VERTICAL DATUM USED IS NAVD 88

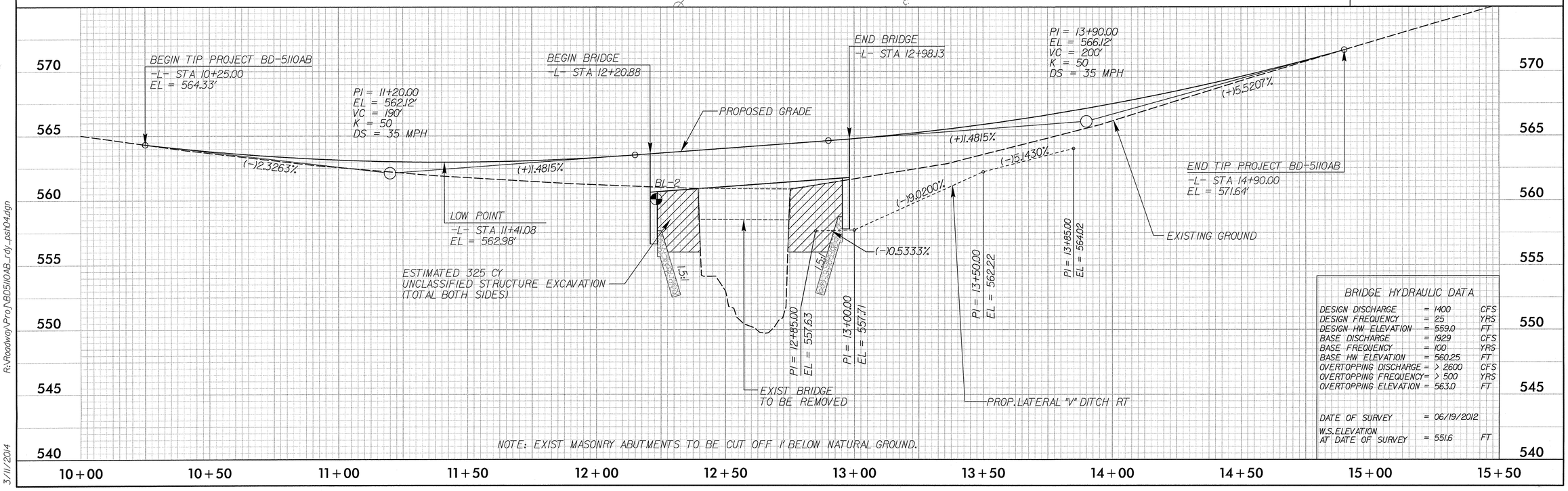

BRIDGE HYDRAULIC DATA

DESIGN DISCHARGE	= 1400	CFS
DESIGN FREQUENCY	= 25	YRS
DESIGN HW ELEVATION	= 559.0	FT
BASE DISCHARGE	= 1929	CFS
BASE FREQUENCY	= 100	YRS
BASE HW ELEVATION	= 560.25	FT
OVERTOPPING DISCHARGE	= > 2600	CFS
OVERTOPPING FREQUENCY	= > 500	YRS
OVERTOPPING ELEVATION	= 563.0	FT
DATE OF SURVEY	= 06/19/2012	
W.S. ELEVATION AT DATE OF SURVEY	= 551.6	FT

R:\Roadway\Proj\BD5110AB_rdy_pst04.dgn

3/11/2014

DETOUR ROUTE

PROJECT REFERENCE NO.	SHEET NO.
BD-5110AB	TCP-1
R/W SHEET NO.	

STV / Ralph Whitehead Associates, Inc.
1000 West Morehead St., Ste. 200
Charlotte, NC 28208
NC License Number F-0991

ROADWAY DESIGN ENGINEER

NORTH CAROLINA PROFESSIONAL SEAL 039234 ENGINEER NIKKI T. HONEYCUTT

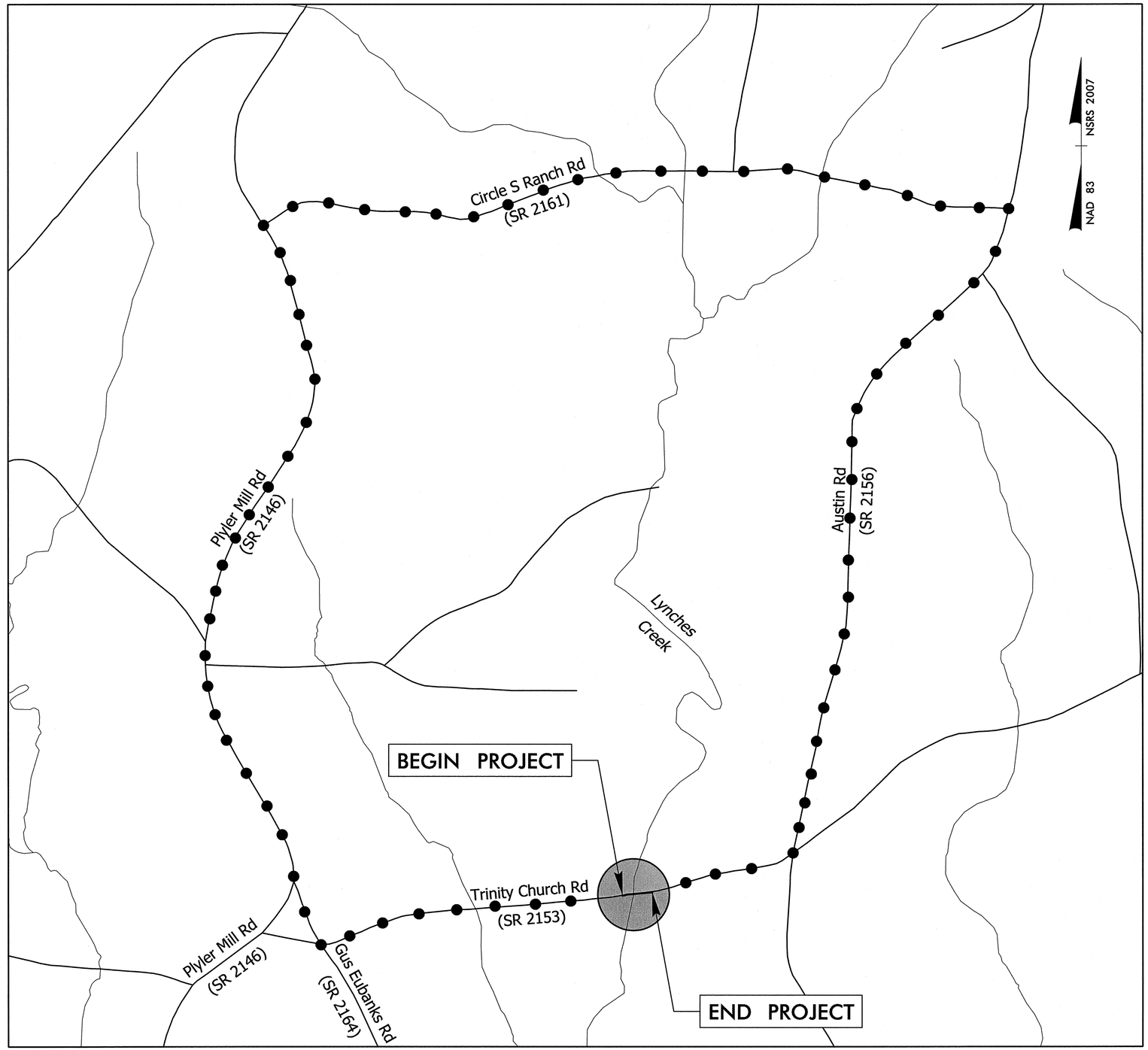

800 400 0 800 1600
Scale: 1" = 800'

R:\Traffic\TrafficControl\TCP\BD5110AB_rdy_tcp01.dgn

3/11/2014

STATE	STATE PROJECT REFERENCE NO.	SHEET NO.	TOTAL SHEETS
N.C.	BD–5110AB	EC-1	4

STATE PROJ. NO.	F.A. PROJ. NO.	DESCRIPTION
45356.1.28	BRZ–2153(3)	P.E.
45356.2.FD28	BRZ–2153(3)	R/W & UTILITIES
45356.3.FD28	BRZ–2153(3)	CONST.

TIP PROJECT: BD–5110AB

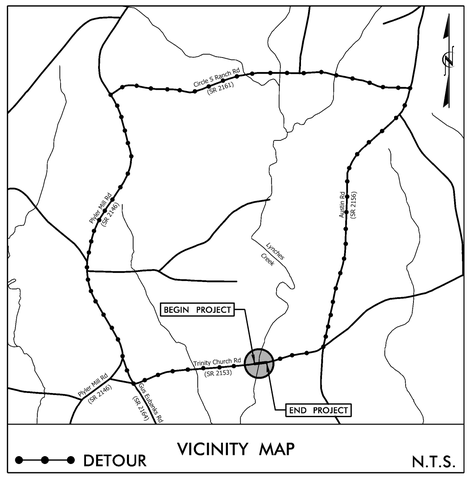

EROSION CONTROL PLANS

STATE OF NORTH CAROLINA
DIVISION OF HIGHWAYS

PLAN FOR PROPOSED
HIGHWAY EROSION CONTROL

UNION COUNTY

LOCATION: BRIDGE #285 OVER LYNCHES CREEK ON SR 2153 (TRINITY CHURCH ROAD)

NAD 83 NSRS 2007

EC–4

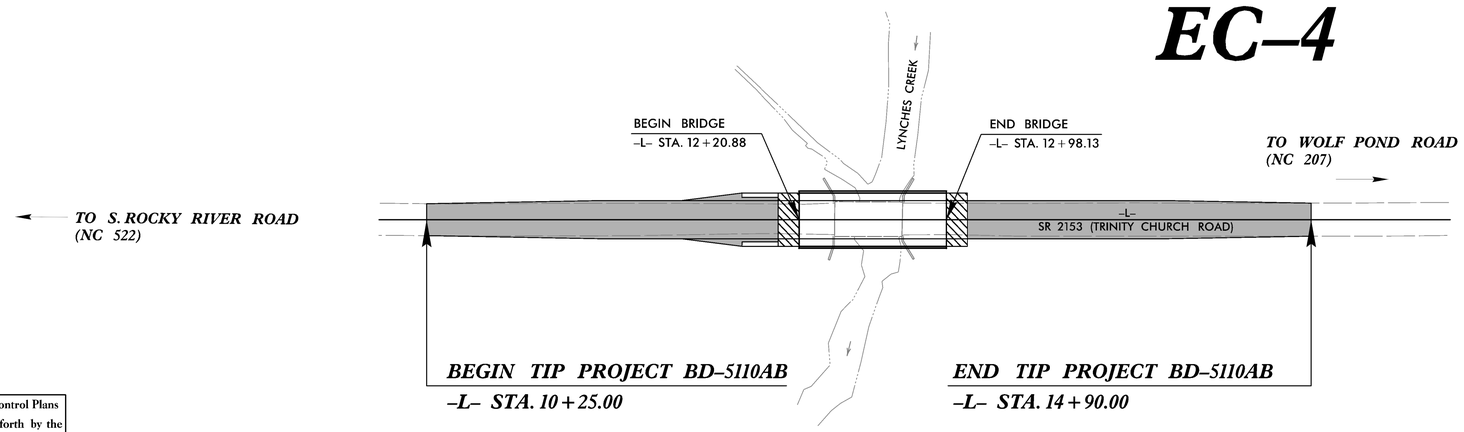

EROSION AND SEDIMENT CONTROL MEASURES

The following roadway english standards as appear in "Roadway Standard Drawings"- Roadway Design Unit - N.C. Department of Transportation - Raleigh, N.C., dated January 2012 and the latest revison thereto are applicable to this project and by reference hereby are considered a part of these plans.

Std. #	Description	Symbol
1605.01	Temporary Silt Fence	
1606.01	Special Sediment Control Fence	
1607.01	Gravel Construction Entrance	
1622.01	Temporary Berms and Slope Drains	
1630.01	Riser Basin	
1630.03	Temporary Silt Ditch	TSD
1630.04	Stilling Basin	
1630.05	Temporary Diversion	TD
1630.06	Special Stilling Basin	
1632.01	Rock Inlet Sediment Trap Type A	A
1632.02	Rock Inlet Sediment Trap Type B	B
1632.03	Rock Inlet Sediment Trap Type C	C
1633.01	Temporary Rock Silt Check Type-A	
1633.02	Temporary Rock Silt Check Type-B	
1634.01	Temporary Rock Sediment Dam Type-A	
1634.02	Temporary Rock Sediment Dam Type-B	
1635.01	Rock Pipe Inlet Sediment Trap Type-A	
1635.02	Rock Pipe Inlet Sediment Trap Type-B	
SP	Silt Basin Type B	
SP	Skimmer Basin	
SP	Tiered Skimmer Basin	
SP	Infiltration Basin	
SP	Wattle	
SP	Wattle w/ Polyacrylamide (PAM)	
SP	Coir Fiber Matting	

These Erosion and Sediment Control Plans comply with the regulations set forth by the NCG010000 general construction permit effective August 3, 2011 issued by the North Carolina Department of Environment and Natural resources Division of Water Quality.

CLEARING ON THIS PROJECT SHALL BE PERFORMED TO THE LIMITS ESTABLISHED BY METHOD II.

CONTRACT:

GRAPHIC SCALE

20 10 0 20 40

PLANS

ROADSIDE ENVIRONMENTAL UNIT
DIVISION OF HIGHWAYS
STATE OF NORTH CAROLINA

Level III Designer
Davin Morrison, PE #3126

Prepared In the Office of:

STV/RALPH WHITEHEAD ASSOCIATES, INC.
900 West Trade St., Ste. 715, Charlotte NC, 28202
NC License Number F–0991
FOR NORTH CAROLINA DEPARTMENT OF TRANSPORTATION

2012 STANDARD SPECIFICATIONS

EROSION CONTROL PLANS
4/15/2014

PROJECT REFERENCE NO.	SHEET NO.
BD-5110AB	EC-2
R/W SHEET NO.	

STV / Ralph Whitehead Associates, Inc.
900 West Trade St., Ste. 715
Charlotte, NC 28202
NC License Number F-0991

STABILIZATION REQUIREMENTS

Stabilization for this project shall comply with the time frame guidelines as specified by the NCG-010000 general construction permit effective August 3, 2011 issued by the North Carolina Department of Environment and Natural Resources Division of Water Quality. Temporary or permanent ground cover stabilization shall occur within 7 calendar days from the last land-disturbing activity, with the following exceptions in which temporary or permanent ground cover shall be provided in 14 calendar days from the last land-disturbing activity:

· Slopes between 2:1 and 3:1, with a slope length of 10 ft. or less

· Slopes 3:1 or flatter, with a slope of length of 50 ft. or less

· Slopes 4:1 or flatter

The stabilization timeframe for High Quality Water (HQW) Zones shall be 7 calendar days with no exceptions for slope grades or lengths. High Quality Water Zones (HQW) Zones are defined by North Carolina Administrative Code 15A NCAC 04A.0105 (25). Temporary and permanent ground cover stabilization shall be achieved in accordance with the provisions in this contract and as directed.

TEMPORARY ROCK SILT CHECK TYPE 'A' WITH EXCELSIOR MATTING AND POLYACRYLAMIDE (PAM)

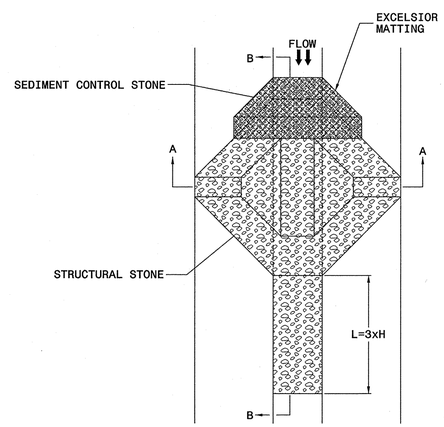

PLAN

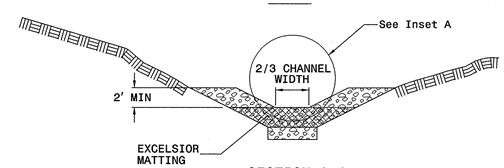

SECTION A-A

NOTES

USE EXCELSIOR FOR MATTING MATERIAL AND ANCHOR MATTING SECTION AT TOP AND BOTTOM WITH CLASS B STONE.

PRIOR TO POLYACRYLAMIDE (PAM) APPLICATION, OBTAIN A SOIL SAMPLE FROM PROJECT LOCATION, AND FROM OFFSITE MATERIAL, AND ANALYZE FOR APPROPRIATE PAM FLOCCULANT TO BE APPLIED TO EACH ROCK SILT CHECK.

INITIALLY APPLY 3.5 OUNCES OF POLYACRYLAMIDE (PAM) TO TOP OF MATTING SECTION AND AFTER EVERY RAINFALL EVENT THAT EQUALS OR EXCEEDS 0.50 INCHES.

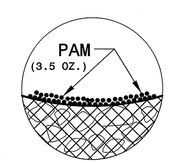

INSET A

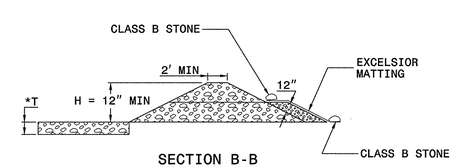

SECTION B-B

*T = 12" MIN., 18" MAX.

NOT TO SCALE

R:\Roadway\Proj\EC\BD5110AB_rdy_pshEC02.dgn

3/11/2014

PROJECT REFERENCE NO.	SHEET NO.
BD-5110AB	EC-3
R/W SHEET NO.	

STV/ Ralph Whitehead Associates, Inc.
900 West Trade St., Ste. 715
Charlotte, NC 28202
NC License Number F-0991

DIVISION OF HIGHWAYS
STATE OF NORTH CAROLINA

SOIL STABILIZATION SUMMARY SHEET

MATTING FOR EROSION CONTROL (FOR SLOPE STABILIZATION)

CONST SHEET NO.	LINE	FROM STATION	TO STATION	SIDE	ESTIMATE (SY)
				SUBTOTAL	970
MISCELLANEOUS MATTING TO BE INSTALLED AS DIRECTED BY THE ENGINEER					100
				TOTAL	1070
				SAY	1070

CLASS B RIP RAP & GEOTEXTILE FOR DRAINAGE (FOR DITCH STABILIZATION)

CONST SHEET NO.	LINE	FROM STATION	TO STATION	SIDE	CLASS B RIP RAP ESTIMATE (TN)
4	-L- V-DITCH	12+85	13+85	RT	95
				SUBTOTAL	95
MISCELLANEOUS MATTING TO BE INSTALLED AS DIRECTED BY THE ENGINEER					10
				TOTAL	105
				SAY	105

PERMANENT SOIL REINFORCEMENT MATTING (FOR TOE STABILIZATION)

CONST SHEET NO.	LINE	FROM STATION	TO STATION	SIDE	ESTIMATE (SY)
4	-L- TOE PROTECT.	13+85	14+85	RT	45
				SUBTOTAL	45
MISCELLANEOUS MATTING TO BE INSTALLED AS DIRECTED BY THE ENGINEER					5
				TOTAL	50
				SAY	50

GEOTEXTILE FOR DRAINAGE (FOR DITCH STABILIZATION)

CONST SHEET NO.	LINE	FROM STATION	TO STATION	SIDE	GEO FOR DRAINAGE ESTIMATE (SY)
4	-L- V-DITCH	12+85	13+85	RT	395
				SUBTOTAL	395
MISCELLANEOUS MATTING TO BE INSTALLED AS DIRECTED BY THE ENGINEER					5
				TOTAL	400
				SAY	400

COIR FIBER MATTING (FOR FLOOD BENCH STABILIZATION)

CONST SHEET NO.	LINE	FROM STATION	TO STATION	SIDE	ESTIMATE (SY)
				SUBTOTAL	85
MISCELLANEOUS MATTING TO BE INSTALLED AS DIRECTED BY THE ENGINEER					15
				TOTAL	100
				SAY	100

R:\Roadway\Proj\ECVBD5110AB_rdy_pshEC03.dgn
3/19/2014

PROJECT REFERENCE NO.	SHEET NO.
BD-5110AB	EC-4
R/W SHEET NO.	

STV / Ralph Whitehead Associates, Inc.
900 West Trade St., Ste. 715
Charlotte, NC 28202
NC License Number F-0991

DETAIL A
SPECIAL LATERAL 'V' DITCH
(Not to Scale)

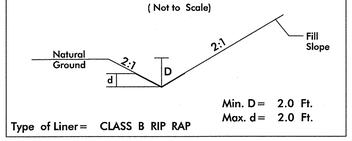

FROM STA. 12+85 TO STA. 13+85 RT

DETAIL B
TOE PROTECTION
(Not to Scale)

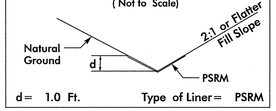

FROM STA. 13+85 TO STA. 14+85 RT

NAD 83 NSRS 2007

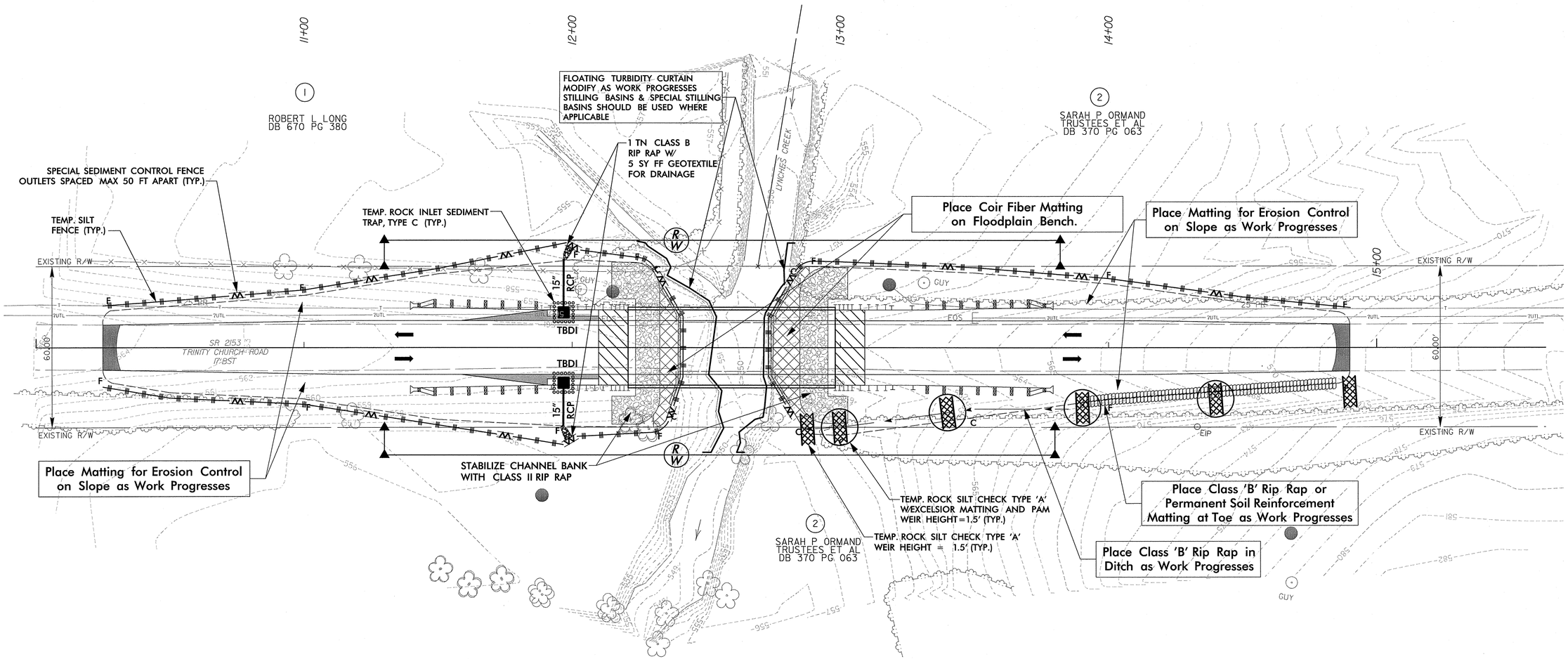

NOTES: ANY DEVIATION FROM OPTIONS GIVEN WILL REQUIRE PRIOR APPROVAL BY ENGINEER.

ADDITIONAL EROSION CONTROL DEVICES MAY NEED TO BE INSTALLED AS DIRECTED BY THE ENGINEER.

R:\Roadway\Proj\EC\BD5110AB_rdy_pshEC04.dgn

3/11/2014

TIP PROJECT: BD-5110AB

STATE OF NORTH CAROLINA
DIVISION OF HIGHWAYS

T.I.P. NO.	SHEET NO.
BD-5110 AB	UO-1

UTILITIES BY OTHERS PLANS
UNION COUNTY

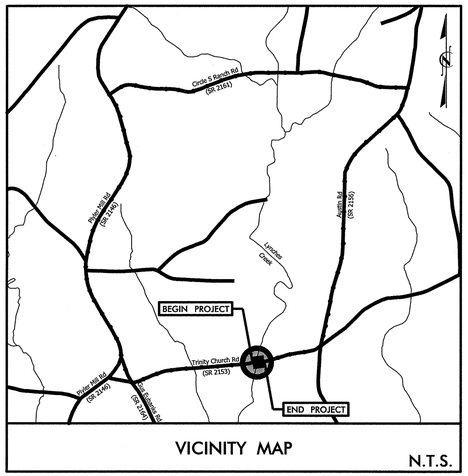

VICINITY MAP N.T.S.

PRELIMINARY PLANS

LOCATION: BRIDGE #285 OVER LYNCHES CREEK ON SR 2153 (TRINITY CHURCH ROAD)

TYPE OF WORK: AERIAL TELEPHONE

NAD 83 NSRS 2007

BEGIN TIP PROJECT BD-5110AB
-L- STA. 10+25.00

END TIP PROJECT BD-5110AB
-L- STA. 14+90.00

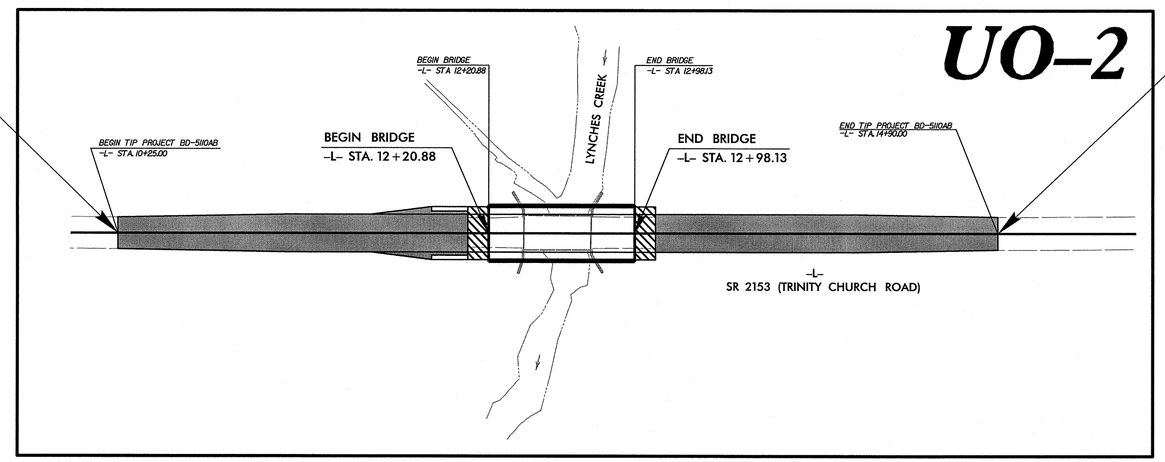

← TO S. ROCKY RIVER ROAD (NC 522)

TO WOLF POND ROAD (NC 207) →

CONTRACT:

PRELIMINARY PLANS
$DATE$

GRAPHIC SCALES

20 10 0 20 40
PLANS

INDEX OF SHEETS

SHEET NO.	DESCRIPTION
UO-1	TITLE SHEET
UO-2	UTILITIES BY OTHERS PLANS

UTILITY OWNERS ON PROJECT

(1) TELEPHONE - FRONTIER

SEAL

NORTH CAROLINA PROFESSIONAL SEAL 26960 ENGINEER REECE M. SCHULER
12/04/2012

Vaughn & Melton
Consulting Engineers
3089-L Beam Road
Charlotte, NC 28217
704-357-0488

PREPARED IN THE OFFICE OF:
DIVISION OF HIGHWAYS
UTILITIES ENGINEERING SECTION

1591 MAIL SERVICES CENTER
RALEIGH NC 27699-1591
PHONE (919) 250-4128
FAX (919) 250-4119

Roger Worthington, P.E.	UTILITIES SECTION ENGINEER
Xxxxx Xxxxx, P.E.	UTILITIES SQUAD LEADER PROJECT ENGINEER
Reece Schuler, PE	UTILITIES PROJECT DESIGNER

PROJECT REFERENCE NO.	SHEET NO.
BD 5110 AB	U0-2

UTILITIES BY OTHERS

NOTE:
ALL PROPOSED UTILITY WORK SHOWN ON THIS SHEET WILL BE DONE BY OTHERS

V&M
Vaughn & Melton
Consulting Engineers
Charlotte, North Carolina 704-357-0488
Asheville, North Carolina 828-253-2796
Tri-Cities, Tennessee 423-467-8400
Knoxville, Tennessee 865 546 5800
Middlesboro, Kentucky 606-248-6600
Spartanburg, South Carolina 864-574-4775

Copyright © 2006 Vaughn & Melton, Inc.
All Rights Reserved

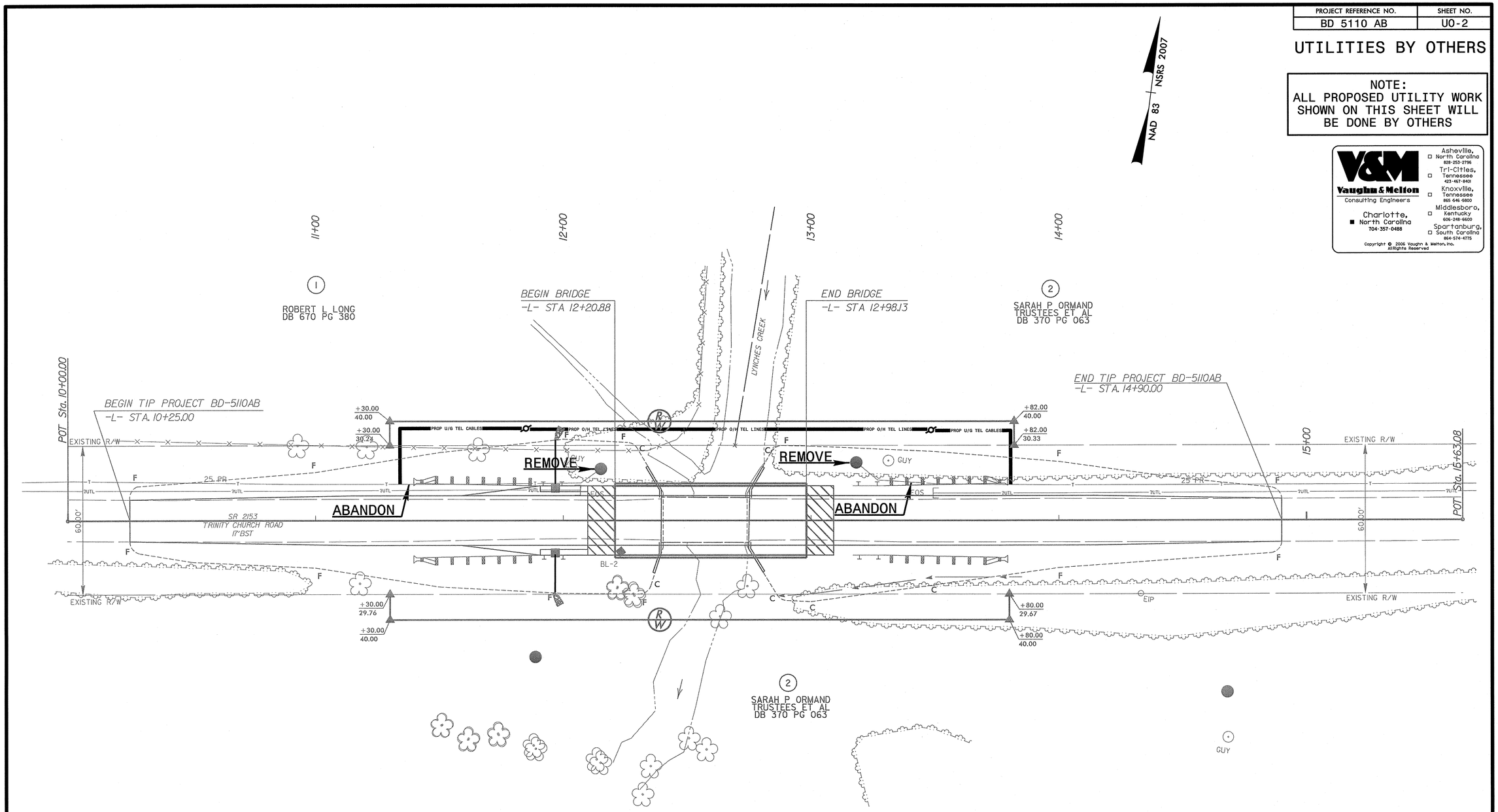

$FILE$

$DATE$

0 2.5 5	PROJ. REFERENCE NO.	SHEET NO.
	BD-5110AB	X-1

BEGIN BRIDGE 12+20.88

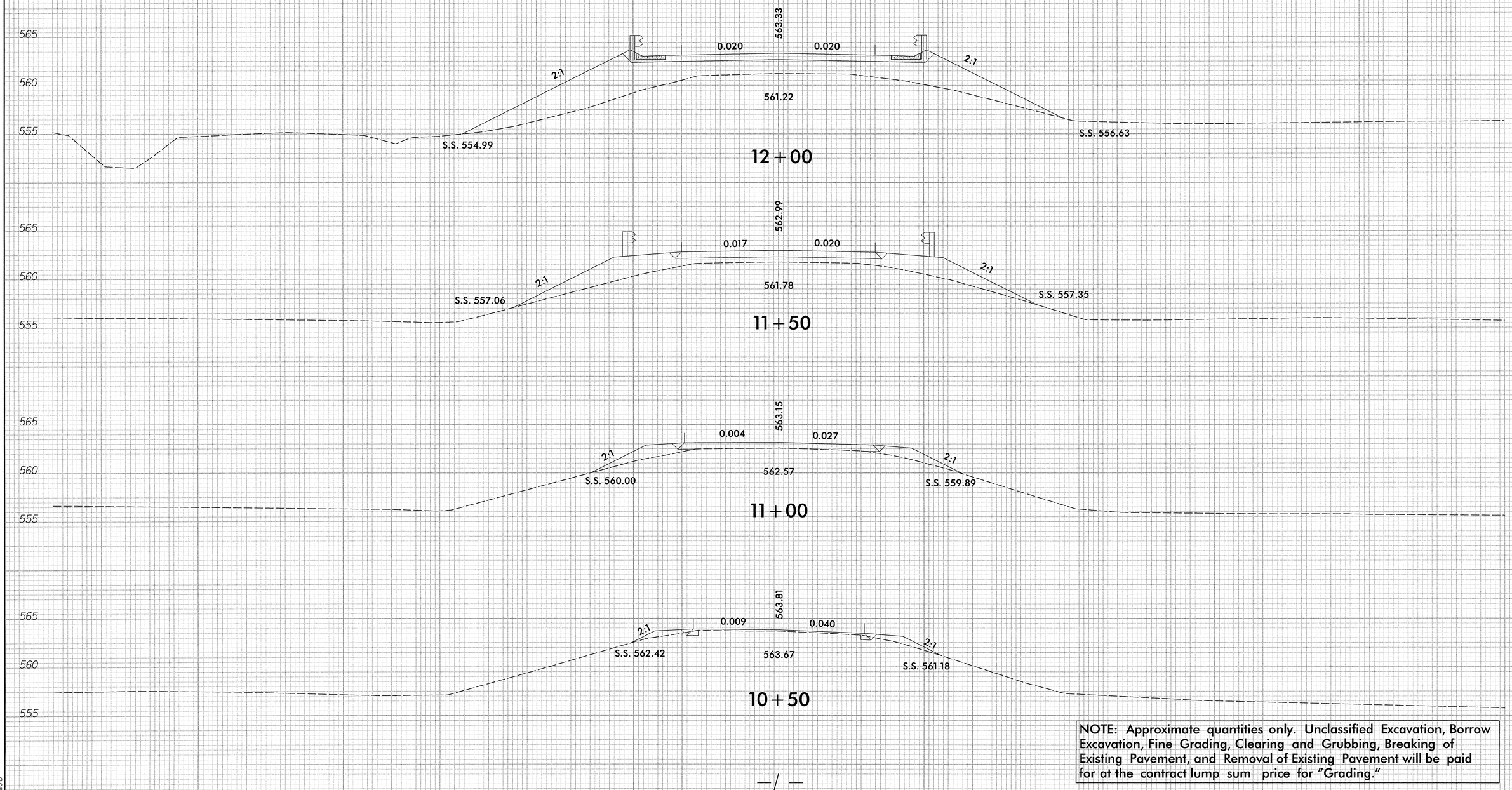

NOTE: Approximate quantities only. Unclassified Excavation, Borrow Excavation, Fine Grading, Clearing and Grubbing, Breaking of Existing Pavement, and Removal of Existing Pavement will be paid for at the contract lump sum price for "Grading."

8/23/99

3/11/2014
Bridge
Boulevard

0 2.5 5	PROJ. REFERENCE NO.	SHEET NO.
	BD-5110AB	X-2

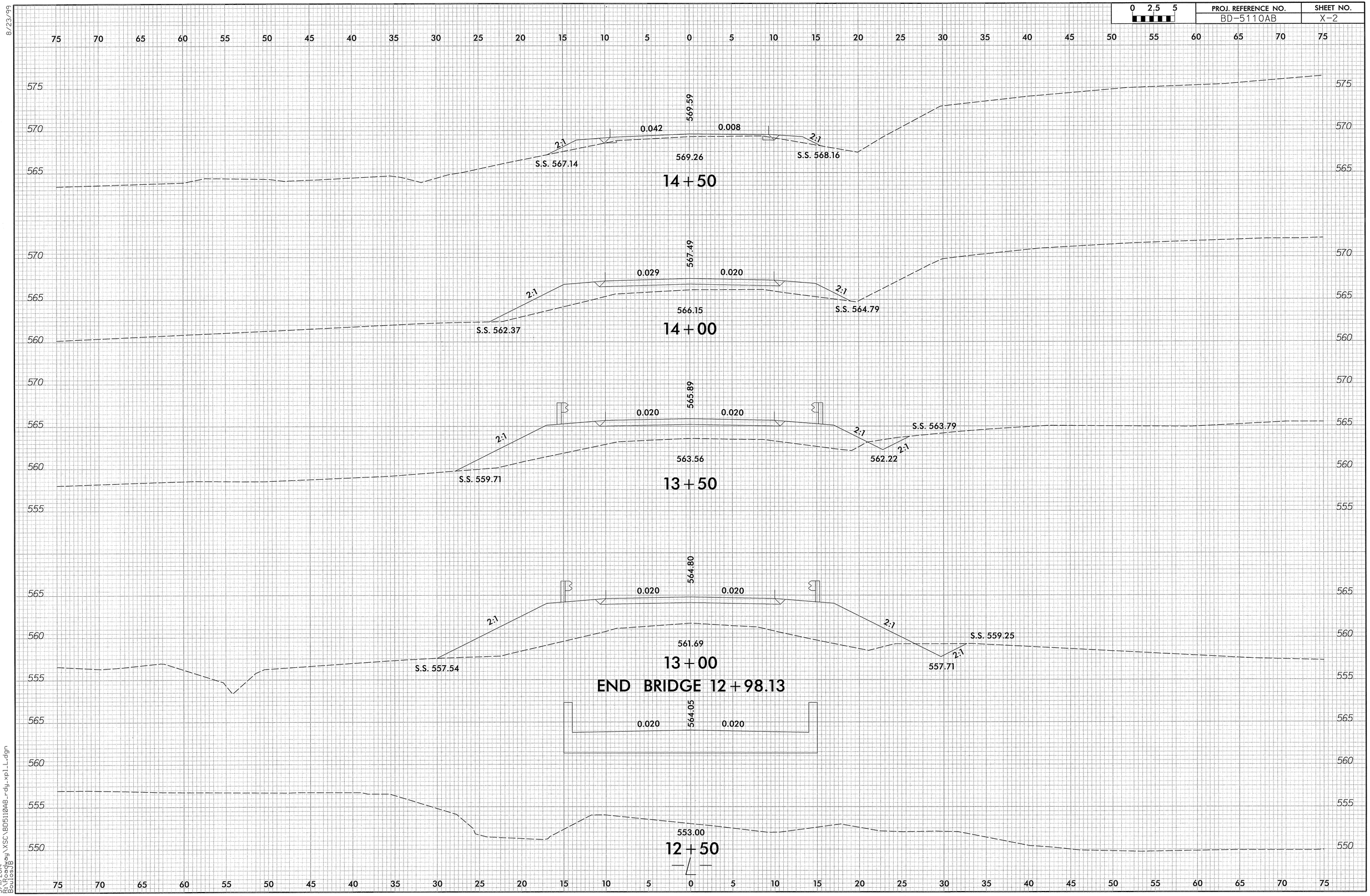

8/23/99

3/11/2014
R:\Roadway\XSC\BD5110AB_rdy_xpl_L.dgn
BoutosJB

F.A. PROJ. NO. BRZ-2153(3)

VERTICAL CURVE DATA -L-

(-)2.3263% (+)1.4815%

PI = 11+20.00
EL = 562.12
VC = 190.00'

VERTICAL CURVE DATA -L-

(+)1.4815% (+)5.5207%

PI = 13+90.00
EL = 566.12
VC = 200.00'

NOTES:

LOW CHORD ELEVATION AT END BENT 1 IS 560.7

LOW CHORD ELEVATION AT END BENT 2 IS 561.8

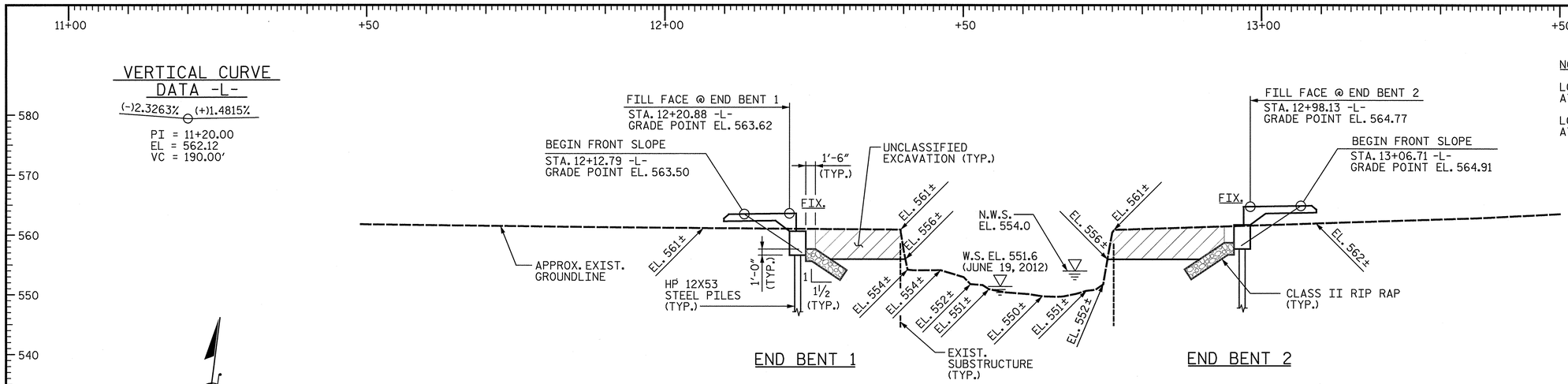

SECTION ALONG -L-

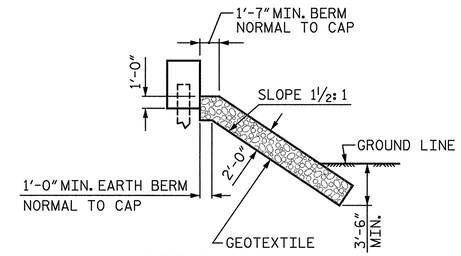

RIP RAP DETAIL

NOT TO SCALE

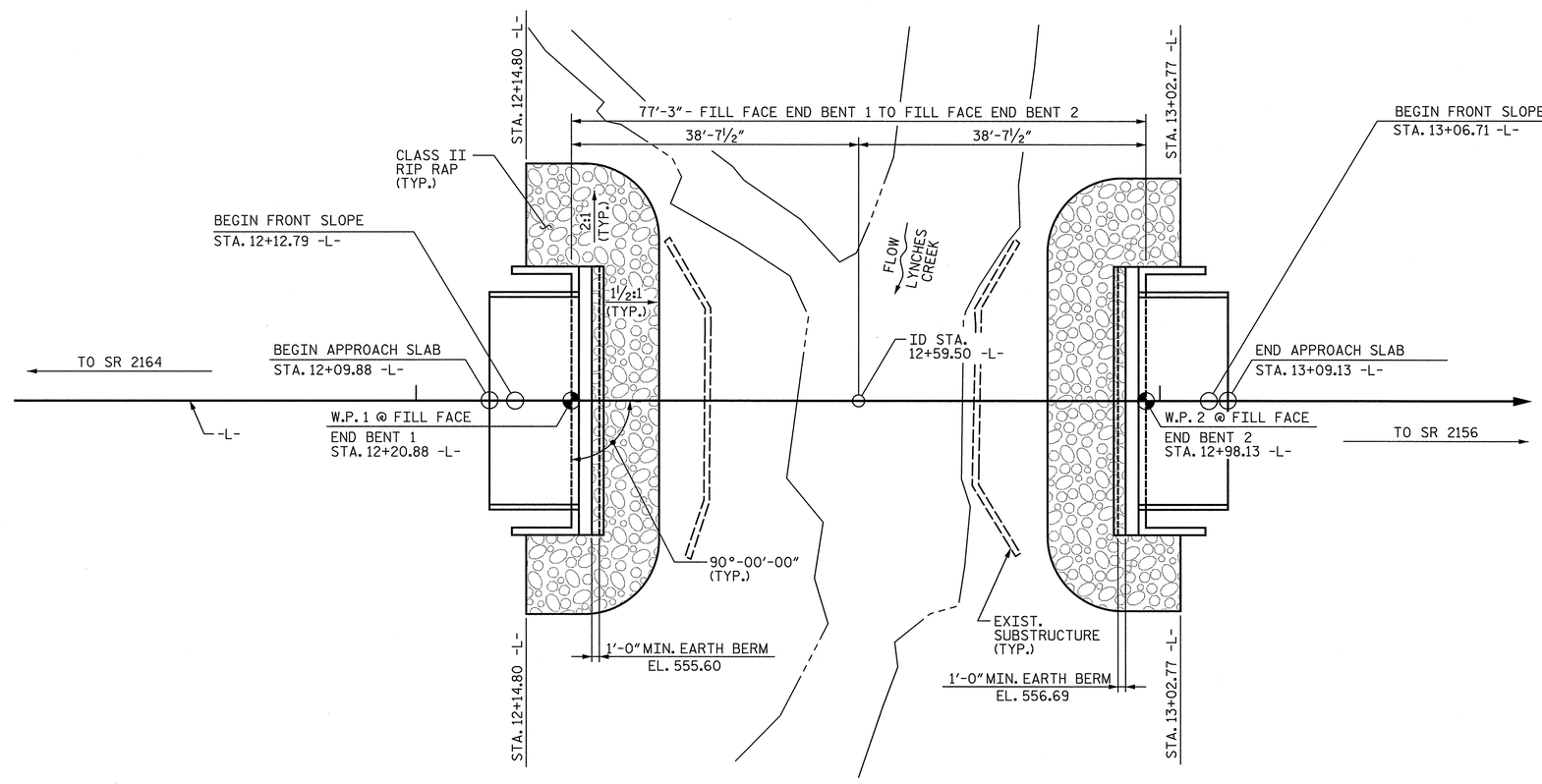

PLAN

(STEEL PILES NOT SHOWN FOR CLARITY)

I HEREBY CERTIFY THESE ARE THE AS-BUILT PLANS

RESIDENT ENGINEER

PROJECT NO. BD-5110AB

UNION COUNTY

STATION: 12+59.50 -L-

SHEET 1 OF 2 REPLACES BRIDGE NO. 285

STATE OF NORTH CAROLINA
DEPARTMENT OF TRANSPORTATION
RALEIGH

GENERAL DRAWING

FOR BRIDGE ON SR 2153 (TRINITY CHURCH ROAD) OVER LYNCHES CREEK BETWEEN SR 2164 AND SR 2156

NORTH CAROLINA PROFESSIONAL SEAL 038640 ENGINEER WESLEY JONES
1-10-14

STV / Ralph Whitehead Associates, Inc.
900 West Trade Street, Suite 715
Charlotte, NC 28202
NC License Number F-0991

REVISIONS							
NO.	BY:	DATE:	NO.	BY:	DATE:	SHEET NO.	S-1
1			3			TOTAL SHEETS	14
2			4				

DRAWN BY : JWJ DATE : 04-13
CHECKED BY : JTG DATE : 04-13

jjones 1/9/2014 5:40:17 PM R:\Structures\Finals\(01) Plan and Profile.dgn

BENCHMARK BL-2: 12.58' RT. STA. 12+23.19 -L-, N 399859.9950 E 1528776.4550, EL. 560.10

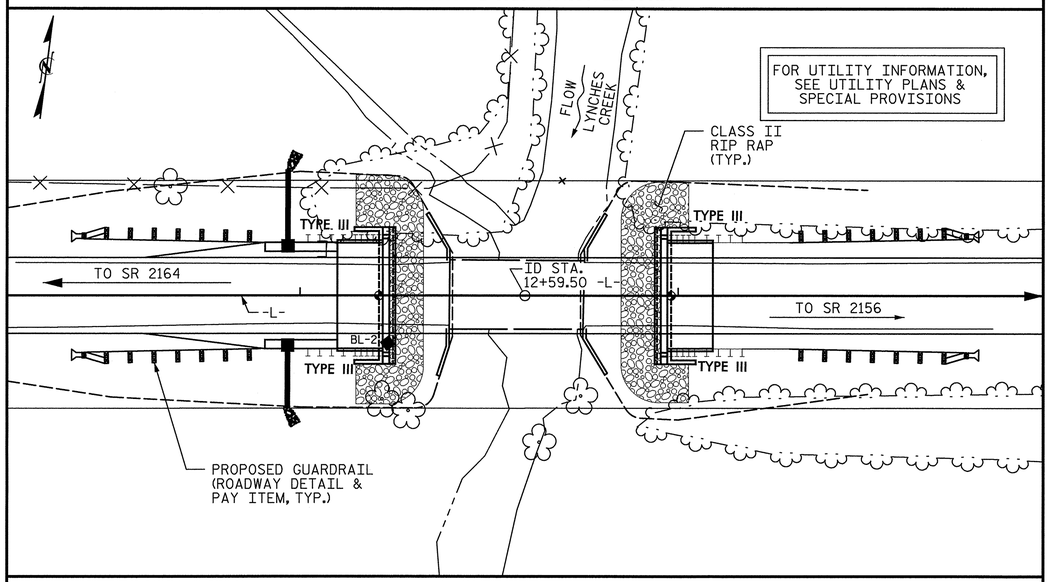

LOCATION SKETCH

HYDRAULIC DATA

DESIGN DISCHARGE: 1400 CFS
FREQUENCY OF DESIGN FLOOD: 25 YRS.
DESIGN HIGH WATER ELEVATION: 559.0
DRAINAGE AREA: 4.6 SQ. MI.
BASE DISCHARGE (Q100): 1929 CFS
BASE HIGH WATER ELEVATION: 560.25

OVERTOPPING FLOOD DATA

OVERTOPPING DISCHARGE: >2600 CFS
FREQUENCY OF OVERTOPPING FLOOD: >500 YRS.
OVERTOPPING FLOOD ELEVATION: 563.0

GENERAL NOTES

ASSUMED LIVE LOAD = HL 93 OR ALTERNATE LOADING.

THIS BRIDGE HAS BEEN DESIGNED IN ACCORDANCE WITH THE AASHTO LRFD BRIDGE DESIGN SPECIFICATIONS.

THIS BRIDGE IS LOCATED IN SEISMIC ZONE 1.

FOR OTHER DESIGN DATA AND GENERAL NOTES, SEE "STANDARD NOTES" SHEET.

FOR EROSION CONTROL MEASURES, SEE EROSION CONTROL PLANS.

THE EXISTING STRUCTURE CONSISTING OF (1) 37.2'± TIMBER DECK ON STEEL I-BEAM SPANS WITH A CLEAR ROADWAY OF 24.0' AND SUPPORTED BY YOUNTS MASONRY WITH CONCRETE SEATS AND LOCATED AT THE PROPOSED STRUCTURE SHALL BE REMOVED. MASONRY ABUTMENTS SHALL BE CUT OFF 1' BELOW NATURAL GROUND.

REMOVAL OF THE EXISTING BRIDGE SHALL BE PERFORMED SO AS NOT TO ALLOW DEBRIS TO FALL INTO THE WATER. THE CONTRACTOR SHALL REMOVE THE BRIDGE AND SUBMIT PLANS FOR DEMOLITION IN ACCORDANCE WITH ARTICLE 402-2 OF THE STANDARD SPECIFICATIONS.

INASMUCH AS THE PAINT SYSTEM ON THE EXISTING STRUCTURAL STEEL CONTAINS LEAD, THE CONTRACTOR'S ATTENTION IS DIRECTED TO ARTICLE 107-1 OF THE STANDARD SPECIFICATIONS. ANY COSTS RESULTING FROM COMPLIANCE WITH APPLICABLE STATE OR FEDERAL REGULATIONS PERTAINING TO HANDLING OF MATERIALS CONTAINING LEAD BASED PAINT SHALL BE INCLUDED IN THE BID PRICE FOR "REMOVAL OF EXISTING STRUCTURE".

THE CONTRACTOR SHALL PROVIDE INDEPENDENT ASSURANCE SAMPLES OF REINFORCING STEEL AS FOLLOWS: FOR PROJECTS REQUIRING UP TO 400 TONS OF REINFORCING STEEL, ONE 30 INCH SAMPLE OF EACH SIZE BAR USED, AND FOR PROJECTS REQUIRING OVER 400 TONS OF REINFORCING STEEL, TWO 30 INCH SAMPLES OF EACH SIZE BAR USED. THE BARS FROM WHICH THE SAMPLES ARE TAKEN MUST THEN BE SPLICED WITH REPLACEMENT BARS OF THE SIZE AND LENGTH OF THE SAMPLE, PLUS A MINIMUM LAP SPLICE OF THIRTY BAR DIAMETERS. PAYMENT FOR THE SAMPLES OF REINFORCING STEEL SHALL BE CONSIDERED INCIDENTAL TO VARIOUS PAY ITEMS.

THE MATERIAL SHOWN IN THE CROSS-HATCHED AREA (ON SHEET 1 OF 2) SHALL BE EXCAVATED FOR A DISTANCE FROM THE CENTERLINE OF ROADWAY OF APPROXIMATELY 30 FT. (LEFT AND RIGHT) AT BOTH END BENTS AS DIRECTED BY THE ENGINEER. THIS WORK WILL BE PAID FOR AT THE CONTRACT LUMP SUM PRICE FOR UNCLASSIFIED STRUCTURE EXCAVATION. SEE SECTION 412 OF THE STANDARD SPECIFICATIONS.

THE SUBSTRUCTURE OF THE EXISTING BRIDGE INDICATED ON THE PLANS IS FROM THE BEST INFORMATION AVAILABLE. SINCE THIS INFORMATION IS SHOWN FOR THE CONVENIENCE OF THE CONTRACTOR, THE CONTRACTOR SHALL HAVE NO CLAIM WHATSOEVER AGAINST THE DEPARTMENT OF TRANSPORTATION FOR ANY DELAYS OR ADDITIONAL COST INCURRED BASED ON DIFFERENCES BETWEEN THE EXISTING BRIDGE SUBSTRUCTURE SHOWN ON THE PLANS AND THE ACTUAL CONDITIONS AT THE PROJECT SITE.

THIS STRUCTURE HAS BEEN DESIGNED IN ACCORDANCE WITH HEC 18, "EVALUATING SCOUR AT BRIDGES", MAY, 2001.

FOR SUBMITTAL OF WORKING DRAWINGS, SEE SPECIAL PROVISIONS.

FOR FALSEWORK AND FORMWORK, SEE SPECIAL PROVISIONS.

FOR CRANE SAFETY, SEE SPECIAL PROVISIONS.

FOR GROUT FOR STRUCTURES, SEE SPECIAL PROVISIONS.

ASPHALT WEARING SURFACE IS INCLUDED IN ROADWAY QUANTITY ON ROADWAY PLANS.

FOUNDATION NOTES

FOR PILES, SEE SECTION 450 OF THE STANDARD SPECIFICATIONS.

PILES AT END BENT NO. 1 ARE DESIGNED FOR A FACTORED RESISTANCE OF 115 TONS PER PILE.

DRIVE PILES AT END BENT NO. 1 TO A REQUIRED DRIVING RESISTANCE OF 192 TONS PER PILE.

PILES AT END BENT NO. 2 ARE DESIGNED FOR A FACTORED RESISTANCE OF 115 TONS PER PILE.

DRIVE PILES AT END BENT NO. 2 TO A REQUIRED DRIVING RESISTANCE OF 192 TONS PER PILE.

STEEL PILE POINTS ARE REQUIRED FOR STEEL PILES AT BOTH END BENTS. FOR STEEL PILE POINTS, SEE SECTION 450 OF THE STANDARD SPECIFICATIONS.

TOTAL BILL OF MATERIAL

	REMOVAL OF EXISTING STRUCTURE	PDA TESTING	UNCLASSIFIED STRUCTURE EXCAVATION	CLASS A CONCRETE	BRIDGE APPROACH SLABS	REINFORCING STEEL	HP 12 X 53 STEEL PILES		STEEL PILE POINTS	VERTICAL CONCRETE BARRIER RAIL	RIP RAP CLASS II (2'-0" THICK)	GEOTEXTILE FOR DRAINAGE	ELASTOMERIC BEARINGS	3'-0" x 2'-3" PRESTRESSED CONCRETE BOX BEAM UNIT	
	LUMP SUM	EA.	LUMP SUM	CU. YDS.	LUMP SUM	LBS.	NO.	LIN. FT.	EA.	LIN. FT.	TONS	SQ. YDS.	LUMP SUM	NO.	LIN. FT.
SUPERSTRUCTURE					LUMP SUM					150.0			LUMP SUM	10	750.0
END BENT 1			LUMP SUM	20.4		2,524	5	80.0	5		85	95			
END BENT 2			LUMP SUM	20.4		2,524	5	80.0	5		85	95			
TOTAL	LUMP SUM	1	LUMP SUM	40.8	LUMP SUM	5,048	10	160.0	10	150.0	170	190	LUMP SUM	10	750.0

PROJECT NO. BD-5110AB
UNION COUNTY
STATION: 12+59.50 -L-

SHEET 2 OF 2

NORTH CAROLINA PROFESSIONAL SEAL 038640 ENGINEER J. WESLEY JONES
1-10-14

STATE OF NORTH CAROLINA
DEPARTMENT OF TRANSPORTATION
RALEIGH

GENERAL DRAWING

TOTAL BILL OF MATERIAL AND GENERAL NOTES

STV/ Ralph Whitehead Associates, Inc.
900 West Trade Street, Suite 715
Charlotte, NC 28202
NC License Number F-0991

REVISIONS						SHEET NO.
NO.	BY:	DATE:	NO.	BY:	DATE:	S-2
1			3			TOTAL SHEETS
2			4			14

DRAWN BY : JWJ DATE : 04-13
CHECKED BY : JTG DATE : 04-13

jjones 1/9/2014 5:40:30 PM R:\Structures\Finals\(02) TotalBOM.dgn

LOAD AND RESISTANCE FACTOR RATING (LRFD) SUMMARY FOR PRESTRESSED CONCRETE GIRDERS

LEVEL		VEHICLE	WEIGHT (W) (TONS)	CONTROLLING LOAD RATING	MINIMUM RATING FACTORS (RF)	TONS = W X RF	STRENGTH I LIMIT STATE											SERVICE III LIMIT STATE						COMMENT NUMBER
								MOMENT					SHEAR						MOMENT					
							LIVELOAD FACTORS	DISTRIBUTION FACTORS (DF)	RATING FACTOR	SPAN	GIRDER LOCATION	DISTANCE FROM LEFT END OF SPAN (ft)	DISTRIBUTION FACTORS (DF)	RATING FACTOR	SPAN	GIRDER LOCATION	DISTANCE FROM LEFT END OF SPAN (ft)	LIVELOAD FACTORS	DISTRIBUTION FACTORS (DF)	RATING FACTOR	SPAN	GIRDER LOCATION	DISTANCE FROM LEFT END OF SPAN (ft)	
DESIGN LOAD RATING		HL-93(Inv)	N/A	**1**	1.08	--	1.75	0.274	1.55	A	EL	36.75	0.503	1.56	A	EL	7.35	0.80	0.274	**1.08**	A	EL	**36.75**	
		HL-93(Opr)	N/A	--	2.01	--	1.35	0.274	2.01	A	EL	36.75	0.503	2.10	A	EL	7.35	N/A	--	--	--	--	--	
		HS-20(Inv)	36.000	**2**	1.41	50.760	1.75	0.274	2.03	A	EL	36.75	0.503	2.03	A	EL	7.35	0.80	0.274	**1.41**	A	EL	**36.75**	
		HS-20(Opr)	36.000	--	2.64	95.040	1.35	0.274	2.64	A	EL	36.75	0.503	2.71	A	EL	7.35	N/A	--	--	--	--	--	
LEGAL LOAD RATING	SV	SNSH	13.500	--	3.19	43.065	1.4	0.274	5.75	A	EL	36.75	0.503	6.25	A	EL	7.35	0.80	0.274	3.19	A	EL	36.75	
		SNGARBS2	20.000	--	2.38	47.600	1.4	0.274	4.28	A	EL	36.75	0.503	4.44	A	EL	7.35	0.80	0.274	2.38	A	EL	36.75	
		SNAGRIS2	22.000	--	2.25	49.500	1.4	0.274	4.05	A	EL	36.75	0.503	4.12	A	EL	7.35	0.80	0.274	2.25	A	EL	36.75	
		SNCOTTS3	27.250	--	1.59	43.328	1.4	0.274	2.86	A	EL	36.75	0.503	3.10	A	EL	7.35	0.80	0.274	1.59	A	EL	36.75	
		SNAGGRS4	34.925	--	1.33	46.450	1.4	0.274	2.39	A	EL	36.75	0.503	2.56	A	EL	7.35	0.80	0.274	1.33	A	EL	36.75	
		SNS5A	35.550	--	1.30	46.215	1.4	0.274	2.34	A	EL	36.75	0.503	2.60	A	EL	7.35	0.80	0.274	1.30	A	EL	36.75	
		SNS6A	39.950	--	1.19	47.541	1.4	0.274	2.14	A	EL	36.75	0.503	2.35	A	EL	7.35	0.80	0.274	1.19	A	EL	36.75	
		SNS7B	42.000	--	1.13	47.460	1.4	0.274	2.04	A	EL	36.75	0.503	2.30	A	EL	7.35	0.80	0.274	1.13	A	EL	36.75	
	TTST	TNAGRIT3	33.000	--	1.45	47.850	1.4	0.274	2.61	A	EL	36.75	0.503	2.84	A	EL	7.35	0.80	0.274	1.45	A	EL	36.75	
		TNT4A	33.075	--	1.46	48.290	1.4	0.274	2.63	A	EL	36.75	0.503	2.77	A	EL	7.35	0.80	0.274	1.46	A	EL	36.75	
		TNT6A	41.600	--	1.19	49.504	1.4	0.274	2.15	A	EL	36.75	0.503	2.43	A	EL	7.35	0.80	0.274	1.19	A	EL	36.75	
		TNT7A	42.000	--	1.20	50.400	1.4	0.274	2.16	A	EL	36.75	0.503	2.41	A	EL	7.35	0.80	0.274	1.20	A	EL	36.75	
		TNT7B	42.000	--	1.24	52.080	1.4	0.274	2.23	A	EL	36.75	0.503	2.24	A	EL	7.35	0.80	0.274	1.24	A	EL	36.75	
		TNAGRIT4	43.000	--	1.18	50.740	1.4	0.274	2.12	A	EL	36.75	0.503	2.16	A	EL	7.35	0.80	0.274	1.18	A	EL	36.75	
		TNAGT5A	45.000	--	1.11	49.950	1.4	0.274	2.00	A	EL	36.75	0.503	2.15	A	EL	7.35	0.80	0.274	1.11	A	EL	36.75	
		TNAGT5B	45.000	**3**	1.10	49.500	1.4	0.274	1.98	A	EL	36.75	0.503	2.05	A	EL	7.35	0.80	0.274	**1.10**	A	EL	**36.75**	

LOAD FACTORS:

DESIGN LOAD RATING FACTORS	LIMIT STATE	γ_{DC}	γ_{DW}
	STRENGTH I	1.25	1.50
	SERVICE III	1.00	1.00

NOTES:

MINIMUM RATING FACTORS ARE BASED ON THE STRENGTH I AND SERVICE III LIMIT STATES.

ALLOWABLE STRESSES FOR SERVICE III LIMIT STATE ARE AS REQUIRED FOR DESIGN.

COMMENTS:

1.
2.
3.
4.

(#) CONTROLLING LOAD RATING

(1) DESIGN LOAD RATING (HL-93)

(2) DESIGN LOAD RATING (HS-20)

(3) LEGAL LOAD RATING **

** SEE CHART FOR VEHICLE TYPE

GIRDER LOCATION

I - INTERIOR GIRDER
EL - EXTERIOR LEFT GIRDER
ER - EXTERIOR RIGHT GIRDER

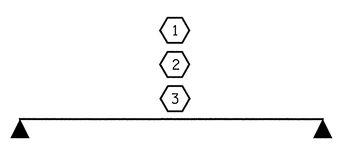

LRFR SUMMARY

FOR SPAN 'A'

PROJECT NO. BD-5110AB

UNION COUNTY

STATION: 12+59.50 -L-

STATE OF NORTH CAROLINA
DEPARTMENT OF TRANSPORTATION
RALEIGH

LRFR SUMMARY FOR 75' BOX BEAM UNIT 90° SKEW

(NON-INTERSTATE TRAFFIC)

NORTH CAROLINA PROFESSIONAL SEAL 038640 ENGINEER J. WESLEY JONES 1-10-14

STV / Ralph Whitehead Associates, Inc.
900 West Trade Street, Suite 715
Charlotte, NC 28202
NC License Number F-0991

REVISIONS						
NO.	BY:	DATE:	NO.	BY:	DATE:	
1			3			
2			4			

SHEET NO. S-3

TOTAL SHEETS 14

DRAWN BY : JWJ DATE : 04-13
CHECKED BY : JTG DATE : 04-13

R:\Structures\Finals\(03) LRFR.dgn 1/9/2014 5:40:41 PM JJones

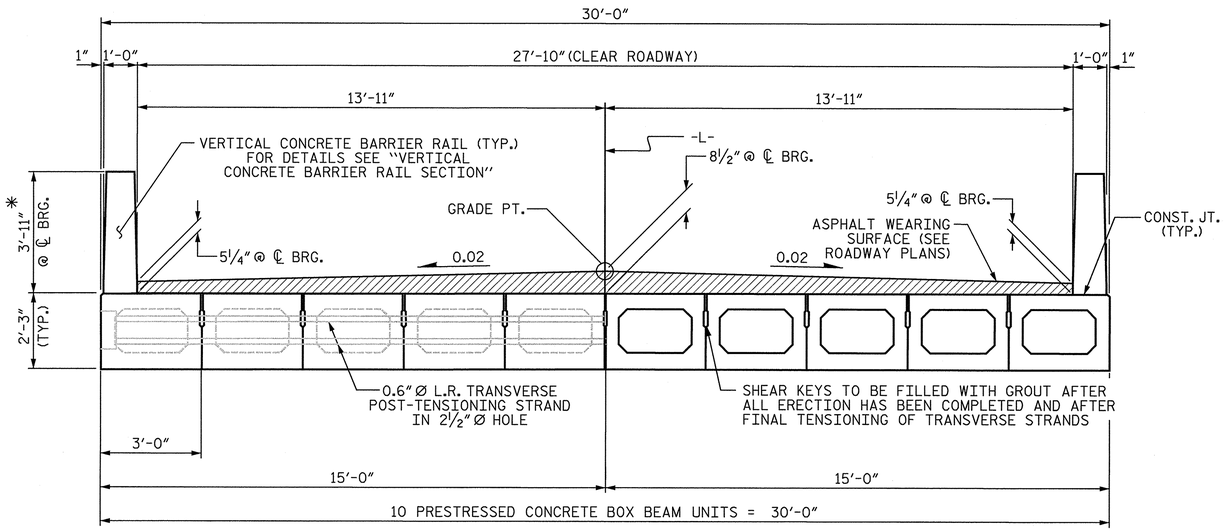

HALF SECTION
AT INTERMEDIATE DIAPHRAGMS

HALF SECTION
THROUGH VOIDS

TYPICAL SECTION

* - THE MAXIMUM BARRIER RAIL HEIGHT AND ASPHALT THICKNESS IS SHOWN. THE HEIGHT OF THE BARRIER RAIL AND ASPHALT THICKNESS VARIES WHILE THE TOP OF THE BARRIER RAIL FOLLOWS THE PROFILE OF THE GUTTERLINE. FOR RAIL HEIGHT DETAILS AND ASPHALT THICKNESS, SEE THE "VERTICAL CONCRETE BARRIER RAIL SECTION" DETAIL.

FIXED END

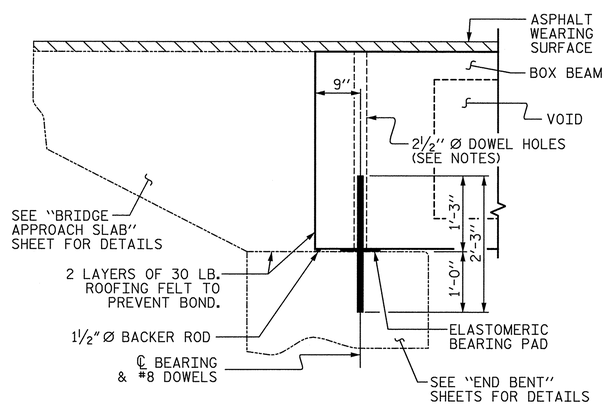

SECTION AT END BENT

NOTES

ALL PRESTRESSING STRANDS SHALL BE 7-WIRE LOW RELAXATION GRADE 270 STRANDS AND SHALL CONFORM TO AASHTO M203 EXCEPT FOR SAMPLING REQUIREMENTS WHICH SHALL BE IN ACCORDANCE WITH THE STANDARD SPECIFICATIONS.

ALL REINFORCING STEEL CAST WITH THE BOX BEAM SECTIONS SHALL BE GRADE 60 AND SHALL BE INCLUDED IN THE UNIT PRICE BID FOR PRESTRESSED CONCRETE BOX BEAMS.

RECESSES FOR TRANSVERSE STRANDS SHALL BE GROUTED AFTER THE TENSIONING OF THE STRANDS.

THE 2½" Ø DOWEL HOLES AT FIXED ENDS OF BOX BEAM SECTIONS SHALL BE FILLED WITH NON-SHRINK GROUT.

THE BACKER RODS SHALL CONFORM TO THE REQUIREMENTS OF TYPE M BOND BREAKER. SEE SECTION 1028 OF THE STANDARD SPECIFICATIONS.

THE TRANSFER OF LOAD FROM THE ANCHORAGES TO THE BOX BEAM UNIT SHALL BE DONE WHEN THE CONCRETE HAS REACHED A COMPRESSIVE STRENGTH OF NOT LESS THAN 6,400 PSI.

ALL REINFORCING STEEL IN BARRIER RAILS SHALL BE EPOXY COATED.

PRESTRESSING STRANDS SHALL BE CUT FLUSH WITH THE BOX BEAM UNIT ENDS.

APPLY EPOXY PROTECTIVE COATING TO BOX BEAM UNIT ENDS.

VERTICAL GROOVED CONTRACTION JOINTS, ½" IN DEPTH, SHALL BE TOOLED IN ALL EXPOSED FACES OF THE BARRIER RAIL AND IN ACCORDANCE WITH ARTICLE 825-10(B) OF THE STANDARD SPECIFICATIONS. A VERTICAL CONTRACTION JOINT SHALL BE LOCATED AT EACH THIRD POINT BETWEEN BARRIER RAIL EXPANSION JOINTS. ONLY ONE CONTRACTION JOINT IS REQUIRED AT MIDPOINT OF BARRIER RAIL SEGMENTS LESS THAN 20 FEET IN LENGTH AND NO CONTRACTION JOINTS ARE REQUIRED FOR THOSE SEGMENTS LESS THAN 10 FEET IN LENGTH.

THE LOCATION OF THE VOID DRAINS MAY BE SHIFTED SLIGHTLY WHERE NECESSARY TO CLEAR PRESTRESSING STRANDS OR TRANSVERSE REINFORCING STEEL.

FOR GROUT FOR STRUCTURES, SEE SPECIAL PROVISIONS.

PROJECT NO. BD-5110AB
UNION COUNTY
STATION: 12+59.50 -L-

SHEET 1 OF 5

STATE OF NORTH CAROLINA
DEPARTMENT OF TRANSPORTATION
RALEIGH

3'-0" X 2'-3" PRESTRESSED CONCRETE BOX BEAM UNIT

NORTH CAROLINA PROFESSIONAL SEAL 038640 ENGINEER WESLEY JONES
1-10-14

STV/ Ralph Whitehead Associates, Inc.
900 West Trade Street, Suite 715
Charlotte, NC 28202
NC License Number F-0991

REVISIONS						SHEET NO.
NO.	BY:	DATE:	NO.	BY:	DATE:	S-4
1			3			TOTAL SHEETS
2			4			14

DRAWN BY : JWJ DATE : 04-13
CHECKED BY : JTG DATE : 04-13

jjones 1/9/2014 5:41:03 PM R:\Structures\Finals\(04) TypicalSect and Details .dgn

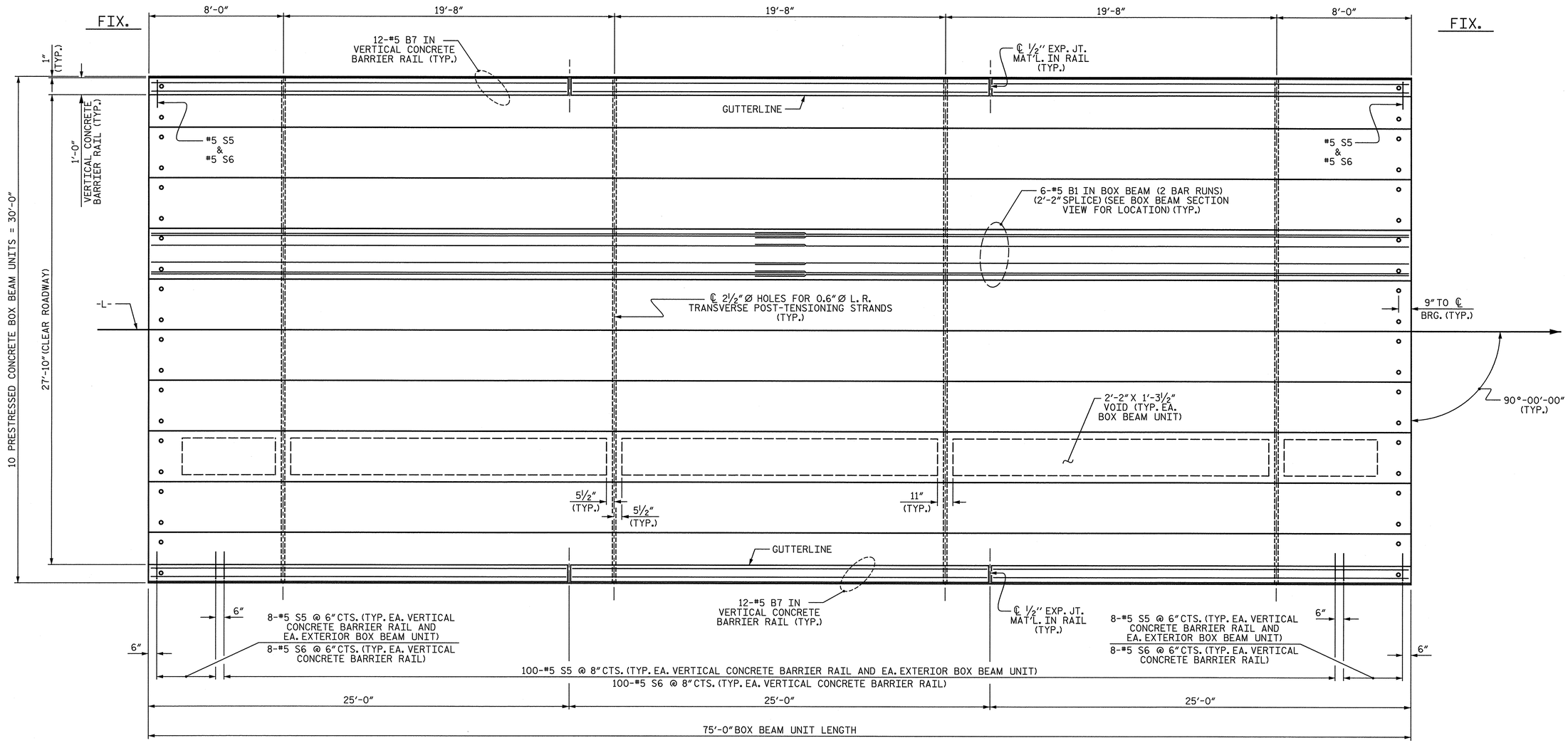

PLAN OF UNIT

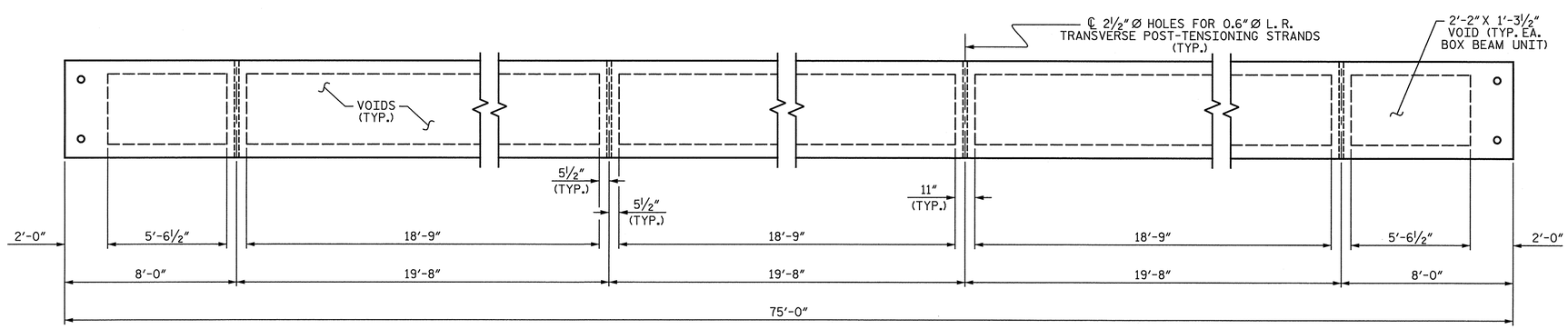

DIAPHRAGM AND VOID LAYOUT

PROJECT NO. BD-5110AB

UNION COUNTY

STATION: 12+59.50 -L-

SHEET 2 OF 5

STATE OF NORTH CAROLINA
DEPARTMENT OF TRANSPORTATION
RALEIGH

PLAN OF 75' UNIT
27'-10" CLEAR ROADWAY
90° SKEW

NORTH CAROLINA PROFESSIONAL SEAL 038640 ENGINEER WESLEY JONES
1-10-14

STV / Ralph Whitehead Associates, Inc.
900 West Trade Street, Suite 715
Charlotte, NC 28202
NC License Number F-0991

REVISIONS							
NO.	BY:	DATE:	NO.	BY:	DATE:		
1			3				
2			4				

SHEET NO. S-5
TOTAL SHEETS 14

DRAWN BY : JWJ DATE : 04-13
CHECKED BY : JTG DATE : 04-13

R:\Structures\Finals\(05) Plan of Span.dgn 1/9/2014 5:41:16 PM JJones

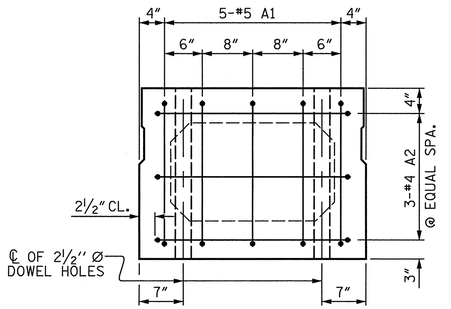

END ELEVATION

SHOWING PLACEMENT OF #5 & #4 "A" BARS AND LOCATION OF DOWEL HOLES. (INTERIOR BOX BEAM SECTION SHOWN-EXTERIOR SECTION SIMILAR EXCEPT SHEAR KEY LOCATION. STRAND LAYOUT NOT SHOWN.)

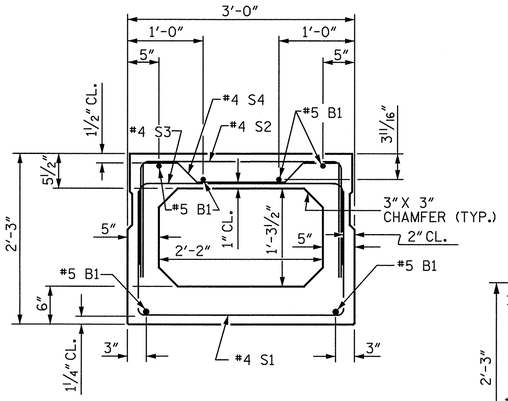

INTERIOR BOX BEAM SECTION

(STRAND LAYOUT NOT SHOWN)

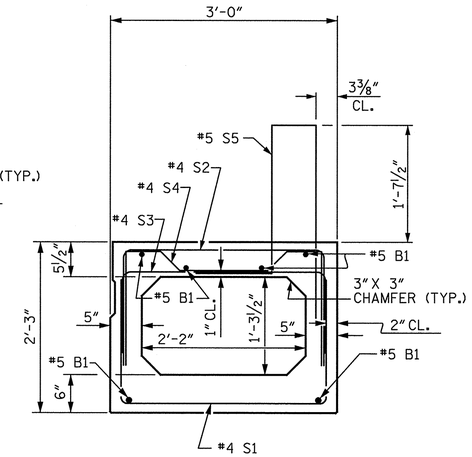

EXTERIOR BOX BEAM SECTION

(STRAND LAYOUT NOT SHOWN)

0.6" Ø LOW RELAXATION STRAND LAYOUT

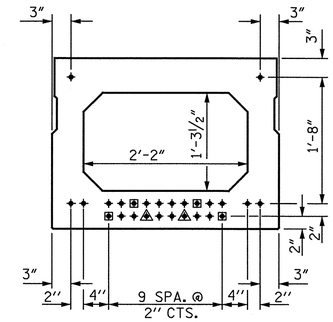

TYPICAL STRAND LOCATION

(26 STRANDS REQUIRED)

(INTERIOR BOX BEAM SECTION SHOWN-EXTERIOR SECTION SIMILAR EXCEPT SHEAR KEY LOCATION)

DEBONDING LEGEND

- ● FULLY BONDED STRANDS
- ⊡ STRANDS DEBONDED FOR 2'-0" FROM END OF GIRDER
- ◬ STRANDS DEBONDED FOR 4'-0" FROM END OF GIRDER

BOND SHALL BE BROKEN ON STRANDS AS SHOWN FOR THE SPECIFIED LENGTH FROM EACH END OF BOX BEAM. SEE STANDARD SPECIFICATIONS, ARTICLE 1078-7.

BAR TYPES

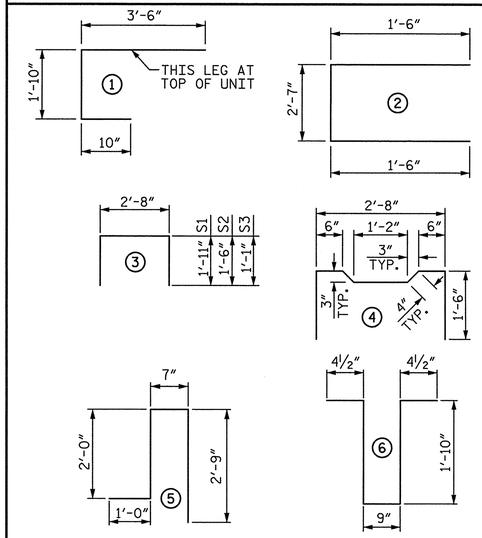

ALL BAR DIMENSIONS ARE OUT TO OUT

BILL OF MATERIAL FOR ONE BOX BEAM SECTION

				EXTERIOR UNIT		INTERIOR UNIT	
BAR	NUMBER	SIZE	TYPE	LENGTH	WEIGHT	LENGTH	WEIGHT
A1	10	#5	1	6'-2"	64	6'-2"	64
A2	22	#4	2	5'-7"	82	5'-7"	82
B1	12	#5	STR	38'-5"	481	38'-5"	481
K1	12	#4	6	5'-2"	41	5'-2"	41
K2	8	#4	STR	2'-7"	14	2'-7"	14
S1	68	#4	3	6'-6"	295	6'-6"	295
S2	68	#4	3	5'-8"	257	5'-8"	257
S3	117	#4	3	4'-10"	378	4'-10"	378
S4	49	#4	4	5'-10"	191	5'-10"	191
✳ S5	116	#5	5	6'-4"	766	--	--
REINFORCING STEEL				1,803 LBS.		1,803 LBS.	
✳ EPOXY COATED REINF. STEEL				766 LBS.			
8,000 P.S.I. CONCRETE				12.0 CU. YDS.		11.8 CU. YDS.	
0.6" Ø L.R. STRANDS				No. 26		No. 26	

GRADE 270 STRANDS

	0.6" Ø L.R.
AREA (SQUARE INCHES)	0.217
ULTIMATE STRENGTH (LBS. PER STRAND)	58,600
APPLIED PRESTRESS (LBS. PER STRAND)	43,950

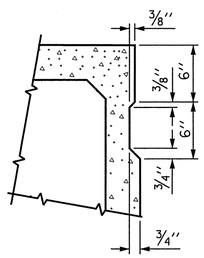

SHEAR KEY DETAIL

NOTE: OMIT SHEAR KEY ON OUTSIDE FACE OF EXTERIOR BOX BEAMS.

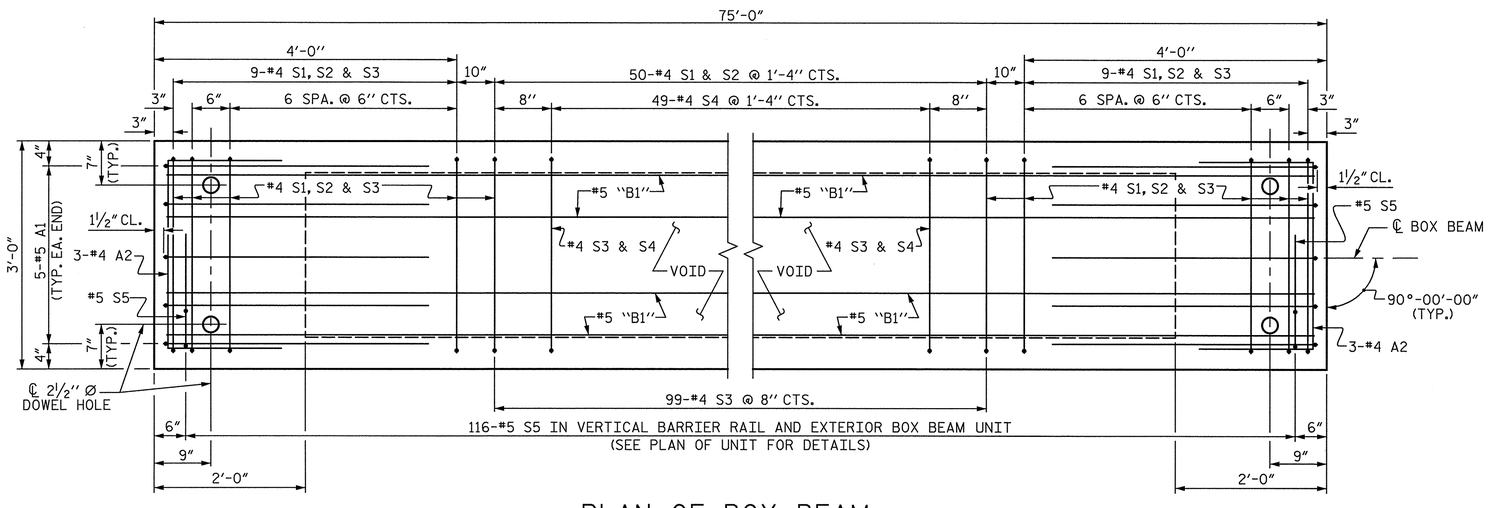

PLAN OF BOX BEAM

EXTERIOR UNIT SHOWN, INTERIOR UNIT SIMILAR EXCEPT OMIT #5 S5 BARS.
FOR LOCATION OF DIAPHRAGMS, SEE PLAN OF SPAN.
FOR REINFORCING STEEL IN DIAPHRAGMS, SEE DIAPHRAGM DETAILS.

PROJECT NO. BD-5110AB

UNION COUNTY

STATION: 12+59.50 -L-

SHEET 3 OF 5

STATE OF NORTH CAROLINA
DEPARTMENT OF TRANSPORTATION
RALEIGH

3'-0" X 2'-9" PRESTRESSED CONCRETE BOX BEAM UNIT

NORTH CAROLINA PROFESSIONAL SEAL 038640 ENGINEER WESLEY JONES 1-10-14

STV / Ralph Whitehead Associates, Inc.
900 West Trade Street, Suite 715
Charlotte, NC 28202
NC License Number F-0991

REVISIONS						SHEET NO.
NO.	BY:	DATE:	NO.	BY:	DATE:	S-6
1			3			TOTAL SHEETS
2			4			14

DRAWN BY : JWJ DATE : 04-13
CHECKED BY : JTG DATE : 04-13

R:\Structures\Finals\06) Box Beam BOM.dgn 1/9/2014 5:41:27 PM JJones

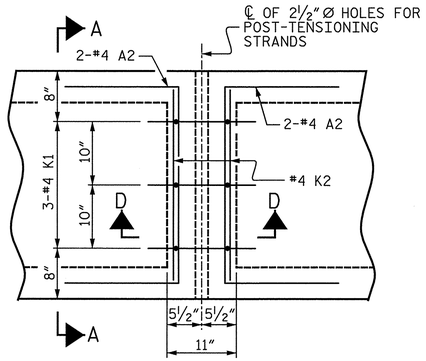

PLAN

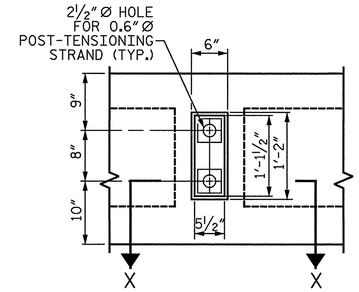

VIEW Y-Y

SHOWING ELEVATION VIEW OF GROUTED RECESS

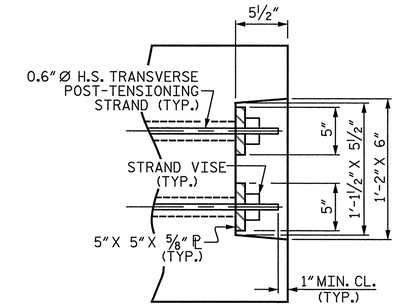

DETAIL "C"

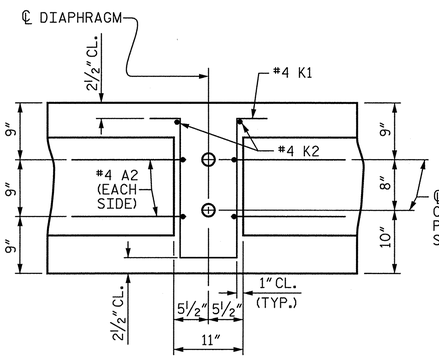

SECTION D-D

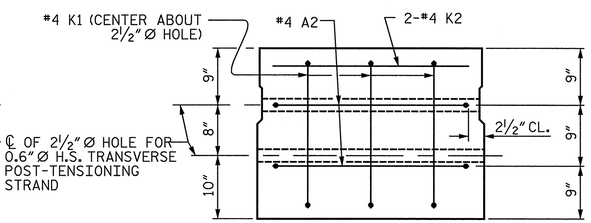

SECTION A-A

VOIDS NOT SHOWN

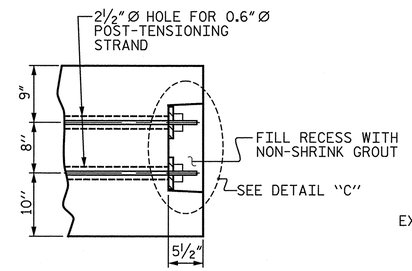

PART SECTION AT RECESS

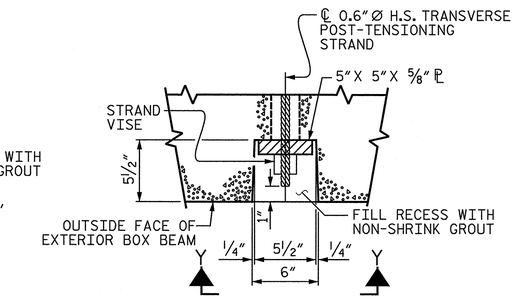

SECTION X-X

SHOWING PLAN VIEW OF GROUTED RECESS

GROUTED RECESS DETAIL AT END OF POST-TENSIONED STRANDS OF EXTERIOR BOX BEAM

DOUBLE DIAPHRAGM DETAILS

#4 "S" BARS NOT SHOWN. #4 "S" BARS MAY BE SHIFTED SLIGHTLY TO CLEAR 2½" Ø HOLE.

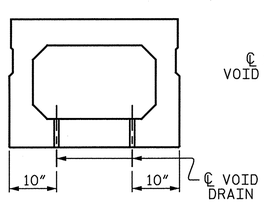

SECTION B-B

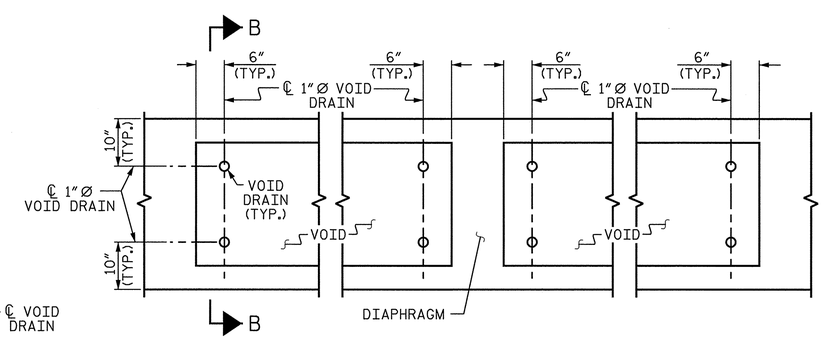

PART PLAN

VOID DRAIN DETAILS

(DIMENSIONS SHOWN ARE TYPICAL FOR EACH VOID)

DEAD LOAD DEFLECTION AND CAMBER	
	3'-0" x 2'-3"
	0.6"Ø L.R. STRAND
	SPAN "A"
CAMBER (BEAM ALONE IN PLACE)	3 7/16" ↑
DEFLECTION DUE TO SUPERIMPOSED DEAD LOAD**	15/16" ↓
FINAL CAMBER	2½" ↑

** INCLUDES FUTURE WEARING SURFACE

PROJECT NO. BD-5110AB

UNION COUNTY

STATION: 12+59.50 -L-

SHEET 4 OF 5

STATE OF NORTH CAROLINA
DEPARTMENT OF TRANSPORTATION
RALEIGH

3'-0" X 2'-3" PRESTRESSED CONCRETE BOX BEAM UNIT

NORTH CAROLINA PROFESSIONAL SEAL 038640 ENGINEER J. WESLEY JONES 1-10-14

STV/Ralph Whitehead Associates, Inc.
900 West Trade Street, Suite 715
Charlotte, NC 28202
NC License Number F-0991

REVISIONS						SHEET NO.
NO.	BY:	DATE:	NO.	BY:	DATE:	S-7
1			3			TOTAL SHEETS
2			4			14

DRAWN BY : JWJ DATE : 04-13
CHECKED BY : JTG DATE : 04-13

R:\Structures\Finals\(07) Box Beam Details.dgn 5:41:39 PM 1/9/2014 JJones

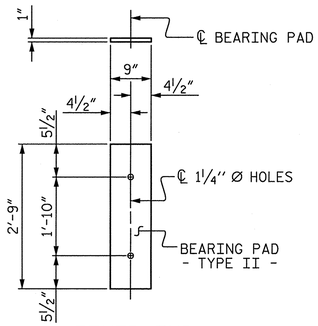

FIXED END

(TYPE II - 20 REQ'D)

ELASTOMERIC BEARING DETAILS

ELASTOMER IN ALL BEARINGS SHALL BE 60 DUROMETER HARDNESS.

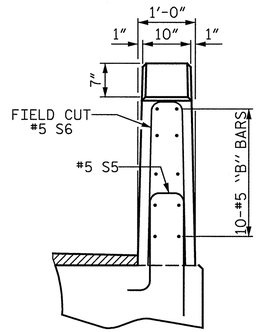

END VIEW

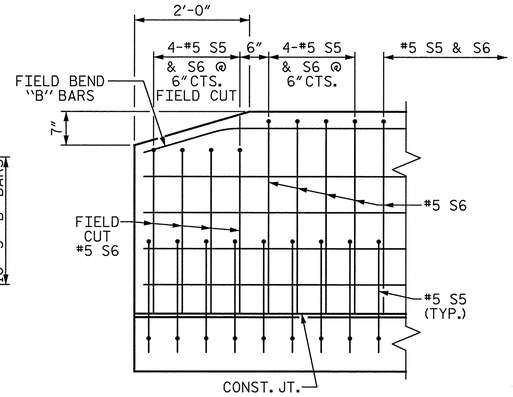

SIDE VIEW

END OF RAIL DETAILS

BOX BEAM UNITS REQUIRED			
	NUMBER	LENGTH	TOTAL LENGTH
EXTERIOR B.B.	2	75'-0"	150'-0"
INTERIOR B.B.	8	75'-0"	600'-0"
TOTAL	10	———	750'-0"

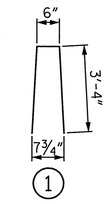

BAR TYPE

BAR DIMENSIONS ARE OUT TO OUT

GUTTERLINE ASPHALT THICKNESS & RAIL HEIGHT		
	ASPHALT OVERLAY THICKNESS @ MID-SPAN	RAIL HEIGHT @ MID-SPAN
75' UNITS	2¾"	3'-8½"

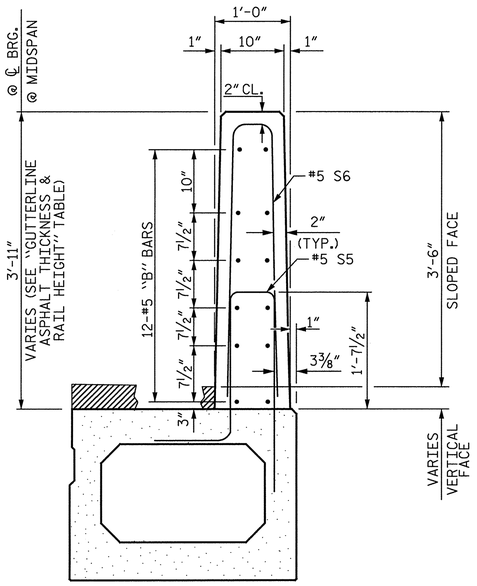

SECTION THRU RAIL

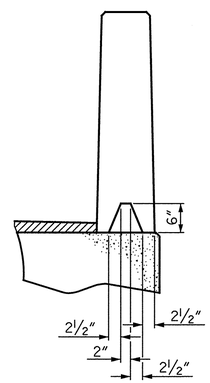

SECTION S-S

AT DAM IN OPEN JOINT
(THIS IS TO BE USED ONLY
WHEN SLIP FORM IS USED)

℄ ½" EXP. JT. MAT'L HELD IN
PLACE WITH GALVANIZED NAILS.
(NOTE: OMIT EXP. JT. MAT'L.
WHEN SLIP FORM IS USED)

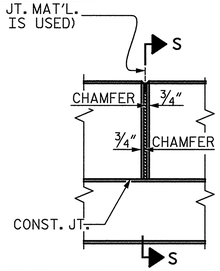

ELEVATION AT EXPANSION JOINTS

VERTICAL CONCRETE BARRIER RAIL DETAILS

BILL OF MATERIAL FOR VERTICAL CONCRETE BARRIER RAIL					
BAR	BARS PER PAIR OF EXTERIOR UNITS	SIZE	TYPE	LENGTH	WEIGHT
	75' UNIT				
* B7	72	#5	STR	24'-7"	1846
* S6	232	#5	1	7'-2"	1734
* EPOXY COATED REINFORCING STEEL			LBS.		3580
CLASS AA CONCRETE			CU.YDS.		20.1
TOTAL VERTICAL CONCRETE BARRIER RAIL			LN. FT.		150.0

PROJECT NO. BD-5110AB

UNION COUNTY

STATION: 12+59.50 -L-

SHEET 5 OF 5

STATE OF NORTH CAROLINA
DEPARTMENT OF TRANSPORTATION
RALEIGH

3'-0" X 2'-3" PRESTRESSED CONCRETE BOX BEAM UNIT

NORTH CAROLINA PROFESSIONAL SEAL 038640 ENGINEER J. WESLEY JONES
1-10-14

STV/ Ralph Whitehead Associates, Inc.
900 West Trade Street, Suite 715
Charlotte, NC 28202
NC License Number F-0991

REVISIONS								SHEET NO.
NO.	BY:	DATE:	NO.	BY:	DATE:			S-8
1			3					TOTAL SHEETS
2			4					14

DRAWN BY : JWJ DATE : 04-13
CHECKED BY : JTG DATE : 04-13

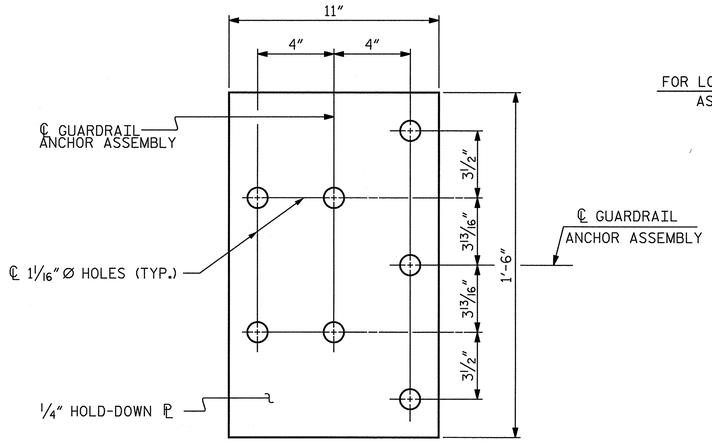

PLAN

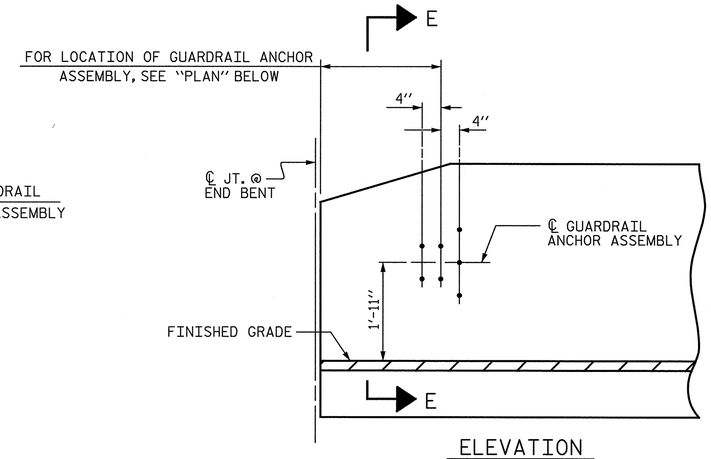

ELEVATION

NOTES

THE GUARDRAIL ANCHOR ASSEMBLY SHALL CONSIST OF A 1/4" HOLD DOWN PLATE AND 7 - 7/8" Ø BOLTS WITH NUTS AND WASHERS.

THE HOLD-DOWN PLATE SHALL CONFORM TO AASHTO M270 GRADE 36. AFTER FABRICATION, THE HOLD-DOWN PLATE SHALL BE HOT-DIP GALVANIZED IN ACCORDANCE WITH AASHTO M111.

BOLTS SHALL CONFORM TO THE REQUIREMENTS OF ASTM A307 AND NUTS SHALL CONFORM TO THE REQUIREMENTS OF AASHTO M291. BOLTS, NUTS AND WASHERS SHALL BE GALVANIZED. (AT THE CONTRACTOR'S OPTION, STAINLESS STEEL BOLTS, NUTS AND WASHERS MAY BE USED AS AN ALTERNATE FOR THE 7/8" Ø GALVANIZED BOLTS, NUTS AND WASHERS. THEY SHALL CONFORM TO OR EXCEED THE MECHANICAL REQUIREMENTS OF ASTM A307. THE USE OF THIS ALTERNATE SHALL BE APPROVED BY THE ENGINEER.)

THE GUARDRAIL ANCHOR ASSEMBLY IS REQUIRED AT ALL POINTS WHERE APPROACH GUARDRAIL IS TO BE ATTACHED TO THE END OF BARRIER RAIL. FOR POINTS OF ATTACHMENT, SEE SKETCH.

AFTER INSTALLATION, THE EXPOSED THREAD OF THE BOLT SHALL BE BURRED WITH A SHARP POINTED TOOL.

THE COST OF THE GUARDRAIL ANCHOR ASSEMBLY SHALL BE INCLUDED IN THE UNIT CONTRACT PRICE BID FOR VERTICAL CONCRETE BARRIER RAIL.

THE VERTICAL REINFORCING BARS MAY BE SHIFTED SLIGHTLY IN THE VERTICAL CONCRETE BARRIER RAIL TO CLEAR ASSEMBLY BOLTS.

THE 1 1/4" Ø HOLES SHALL BE FORMED OR DRILLED WITH A CORE BIT. IMPACT TOOLS WILL NOT BE PERMITTED. ANY CONCRETE DAMAGED BY THIS WORK SHALL BE REPAIRED TO THE SATISFACTION OF THE ENGINEER.

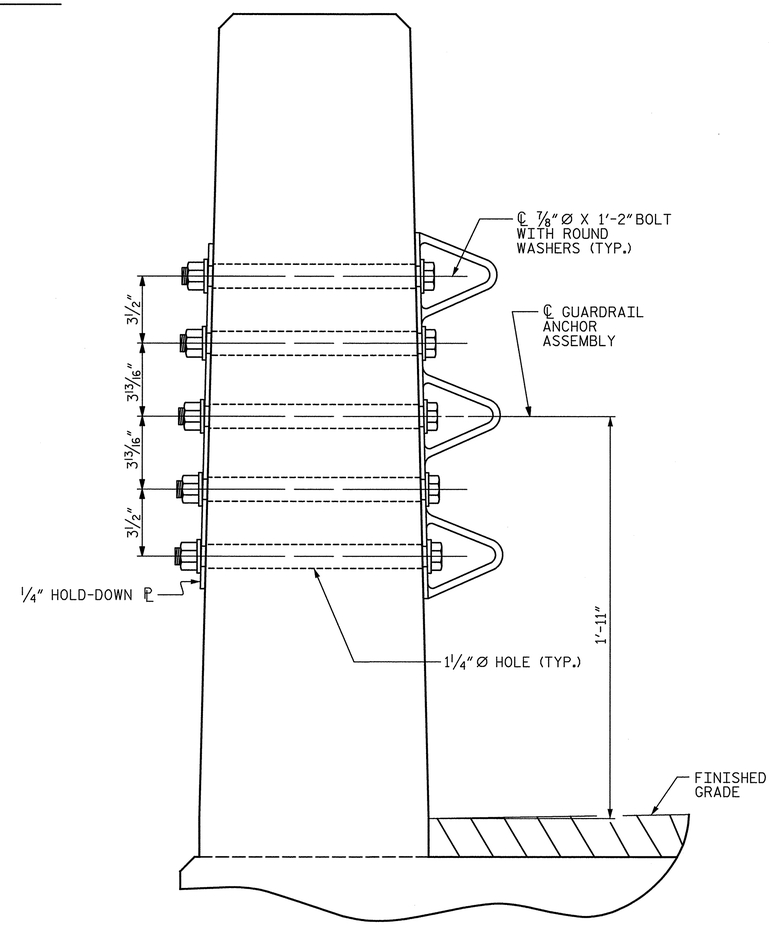

SECTION E-E

GUARDRAIL ANCHOR ASSEMBLY DETAILS

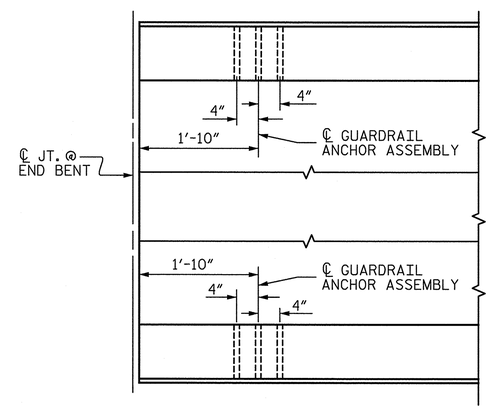

PLAN

LOCATION OF ANCHORS FOR GUARDRAIL

END BENT #1 SHOWN, END BENT #2 SIMILAR.

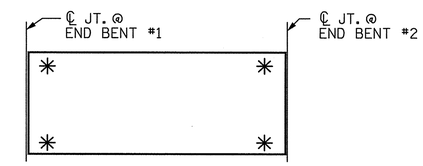

SKETCH SHOWING POINTS OF ATTACHMENT

✳ DENOTES GUARDRAIL ANCHOR ASSEMBLY

PROJECT NO. BD-5110AB
UNION COUNTY
STATION: 12+59.50 -L-

STATE OF NORTH CAROLINA
DEPARTMENT OF TRANSPORTATION
RALEIGH

STANDARD
GUARDRAIL ANCHORAGE FOR VERTICAL CONCRETE BARRIER RAIL

NORTH CAROLINA PROFESSIONAL SEAL 038640 ENGINEER J. WESLEY JONES
1-10-14

STV / Ralph Whitehead Associates, Inc.
900 West Trade Street, Suite 715
Charlotte, NC 28202
NC License Number F-0991

REVISIONS								SHEET NO.
NO.	BY:	DATE:	NO.	BY:	DATE:			S-9
1			3					TOTAL SHEETS
2			4					14

STD. NO. GRA3

ASSEMBLED BY : JWJ		DATE : 04-13	
CHECKED BY : JTG		DATE : 04-13	
DRAWN BY : MAA 5/10	ADDED 5/6/10		
CHECKED BY : GM 5/10	REV. 10/1/11	MAA/GM	
	REV. 12/5/11	MAA/GM	

JJones 1/9/2014 5:42:07 PM R:\Structures\Finals\(09) GuardrailAttach.dgn

NOTES

STIRRUPS IN CAP MAY BE SHIFTED AS NECESSARY TO CLEAR DOWELS.

THE CONCRETE IN THE SHADED AREA OF THE WING SHALL BE POURED AFTER THE VERTICAL CONCRETE BARRIER RAIL IS CAST IF SLIP FORMING IS USED.

FOR PILE SPLICE DETAILS, SEE SHEET 4 OF 4.

FOR WING DETAILS, SEE SHEET 3 OF 4.

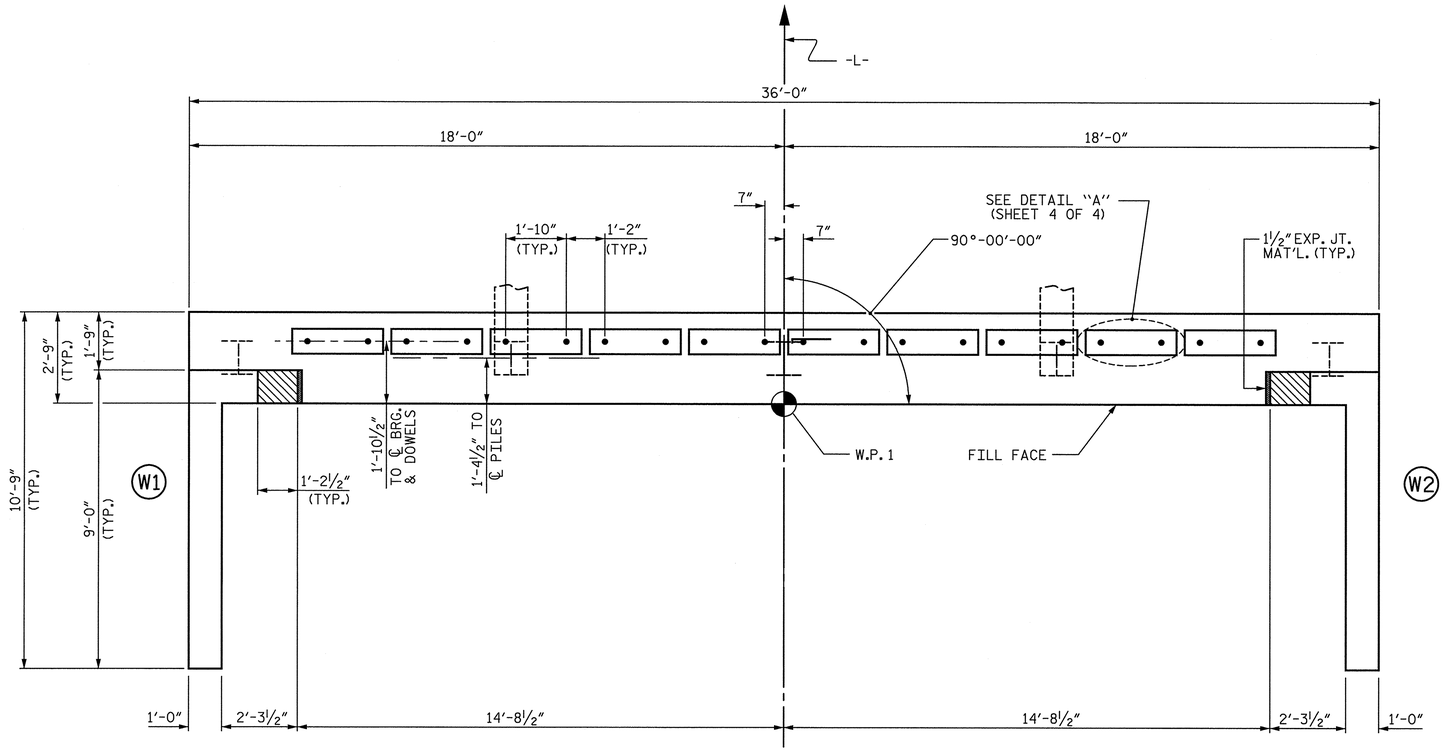

PLAN

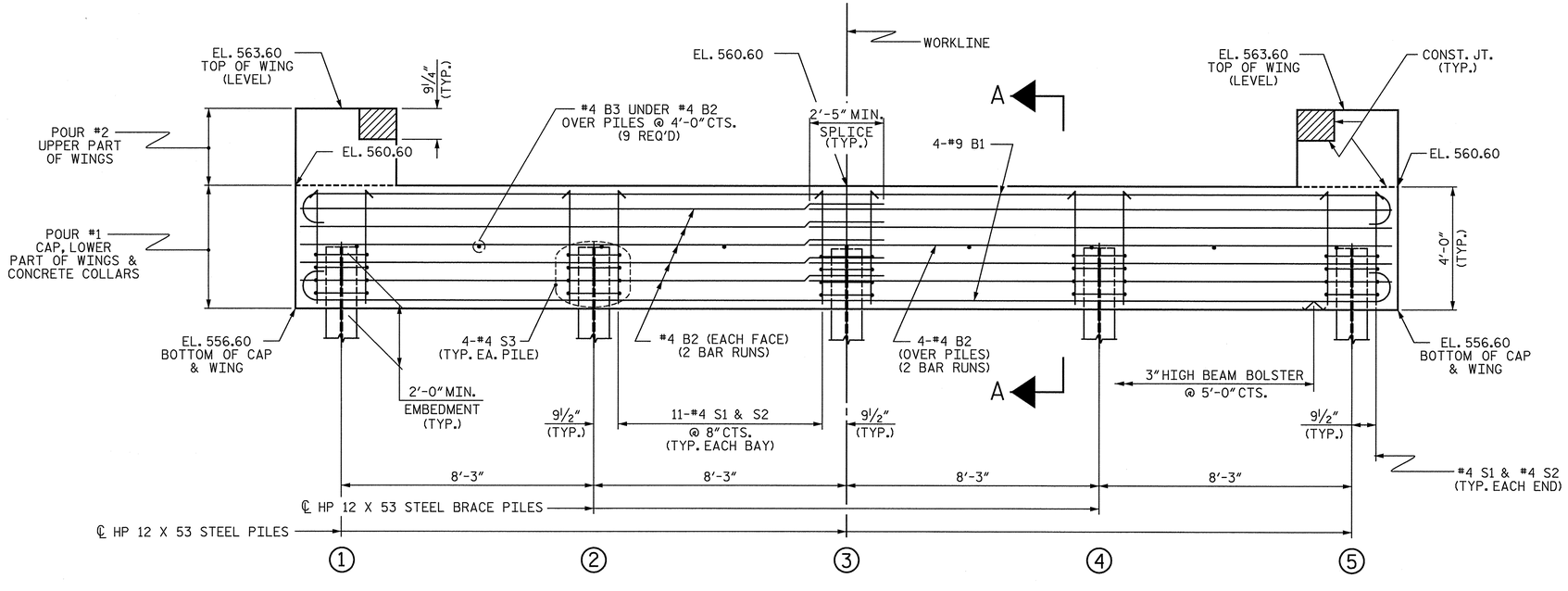

ELEVATION

WINGS NOT SHOWN FOR CLARITY.
FOR SECTION A-A, SEE SHEET 4 OF 4.
CONCRETE COLLARS FOR STEEL PILES NOT SHOWN IN PLAN AND ELEVATION VIEWS FOR CLARITY.
SEE "CORROSION PROTECTION FOR STEEL PILES DETAIL", SHEET 4 OF 4.

PROJECT NO. BD-5110AB
UNION COUNTY
STATION: 12+59.50 -L-

SHEET 1 OF 4

STATE OF NORTH CAROLINA
DEPARTMENT OF TRANSPORTATION
RALEIGH

SUBSTRUCTURE

END BENT No. 1

NORTH CAROLINA PROFESSIONAL SEAL 038640 ENGINEER J. WESLEY JONES
1-10-14

STV/Ralph Whitehead Associates, Inc.
900 West Trade Street, Suite 715
Charlotte, NC 28202
NC License Number F-0991

REVISIONS								SHEET NO.
NO.	BY:	DATE:	NO.	BY:	DATE:			S-10
1			3					TOTAL SHEETS
2			4					14

DRAWN BY : JDE DATE : 04-13
CHECKED BY : JWJ DATE : 11-13

R:\Structures\Finals\(10) End Bent 1.dgn 1/9/2014 5:42:19 PM JJones

NOTES

STIRRUPS IN CAP MAY BE SHIFTED AS NECESSARY TO CLEAR DOWELS.

THE CONCRETE IN THE SHADED AREA OF THE WING SHALL BE POURED AFTER THE VERTICAL CONCRETE BARRIER RAIL IS CAST IF SLIP FORMING IS USED.

FOR PILE SPLICE DETAILS, SEE SHEET 4 OF 4.

FOR WING DETAILS, SEE SHEET 3 OF 4.

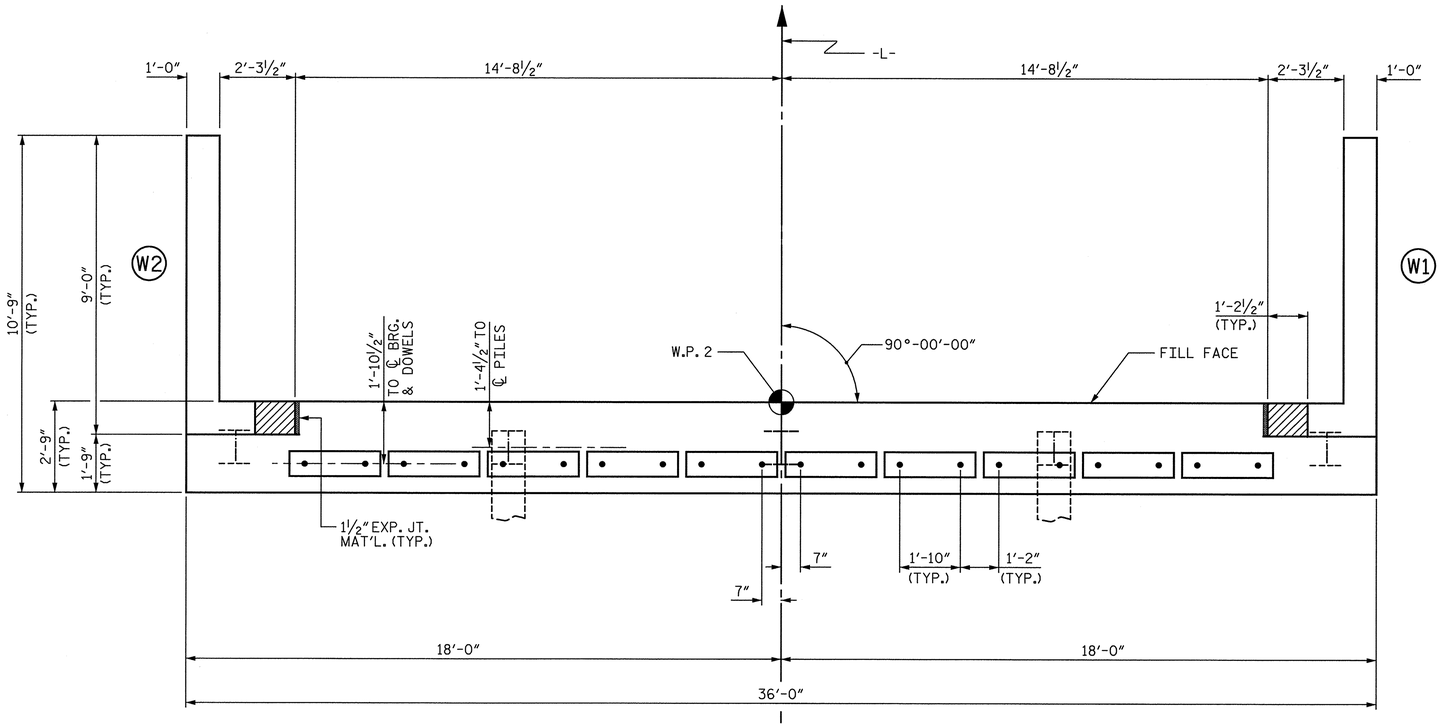

PLAN

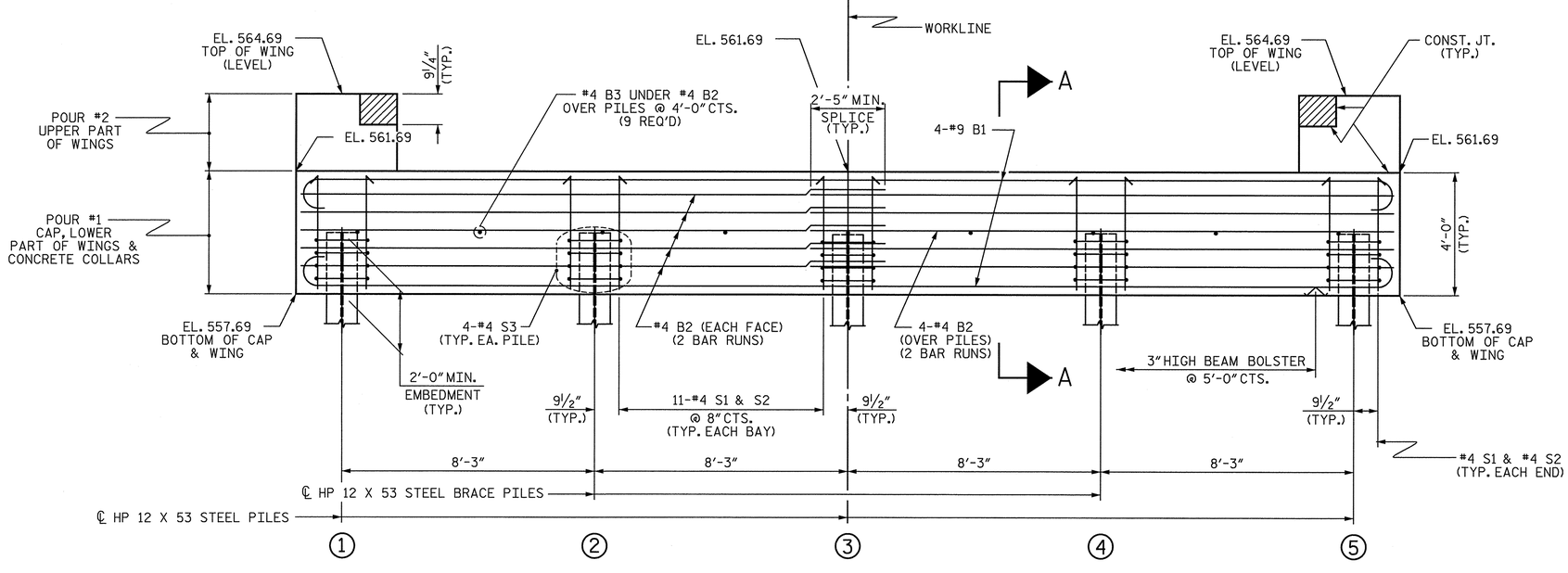

ELEVATION

WINGS NOT SHOWN FOR CLARITY.
FOR SECTION A-A, SEE SHEET 4 OF 4.
CONCRETE COLLARS FOR STEEL PILES NOT SHOWN IN PLAN AND ELEVATION VIEWS FOR CLARITY.
SEE "CORROSION PROTECTION FOR STEEL PILES DETAIL", SHEET 4 OF 4.

PROJECT NO. BD-5110AB
UNION COUNTY
STATION: 12+59.50 -L-

SHEET 2 OF 4

STATE OF NORTH CAROLINA
DEPARTMENT OF TRANSPORTATION
RALEIGH

SUBSTRUCTURE

END BENT No. 2

NORTH CAROLINA PROFESSIONAL SEAL 038640 ENGINEER J. WESLEY JONES
1-10-14

STV / Ralph Whitehead Associates, Inc.
900 West Trade Street, Suite 715
Charlotte, NC 28202
NC License Number F-0991

REVISIONS						SHEET NO.
NO.	BY:	DATE:	NO.	BY:	DATE:	S-11
1			3			TOTAL SHEETS
2			4			14

DRAWN BY : JDE DATE : 04-13
CHECKED BY : JWJ DATE : 11-13

R:\Structures\Finals\(11) End Bent 2.dgn 5:42:32 PM 1/9/2014 JJones

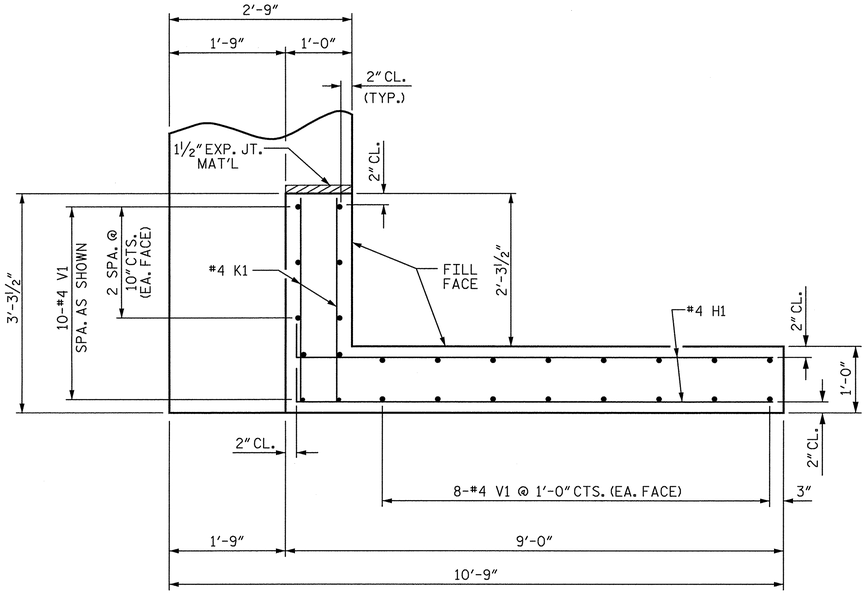

PLAN OF WING (W1)

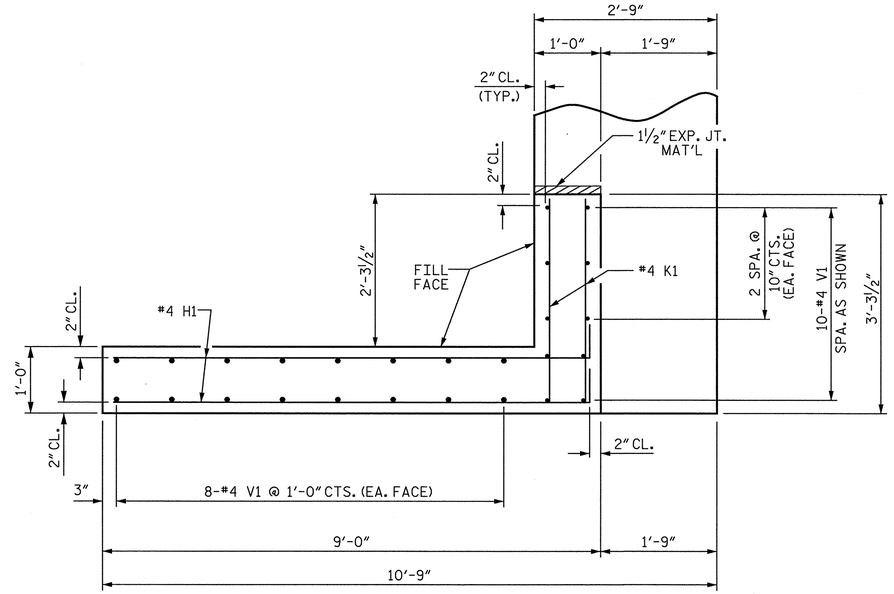

PLAN OF WING (W2)

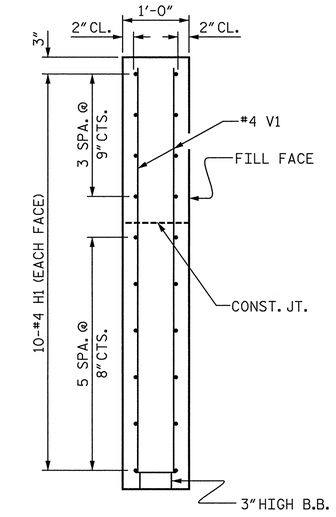

SECTION X-X

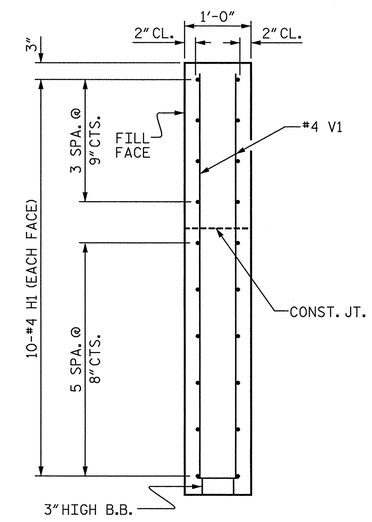

SECTION Y-Y

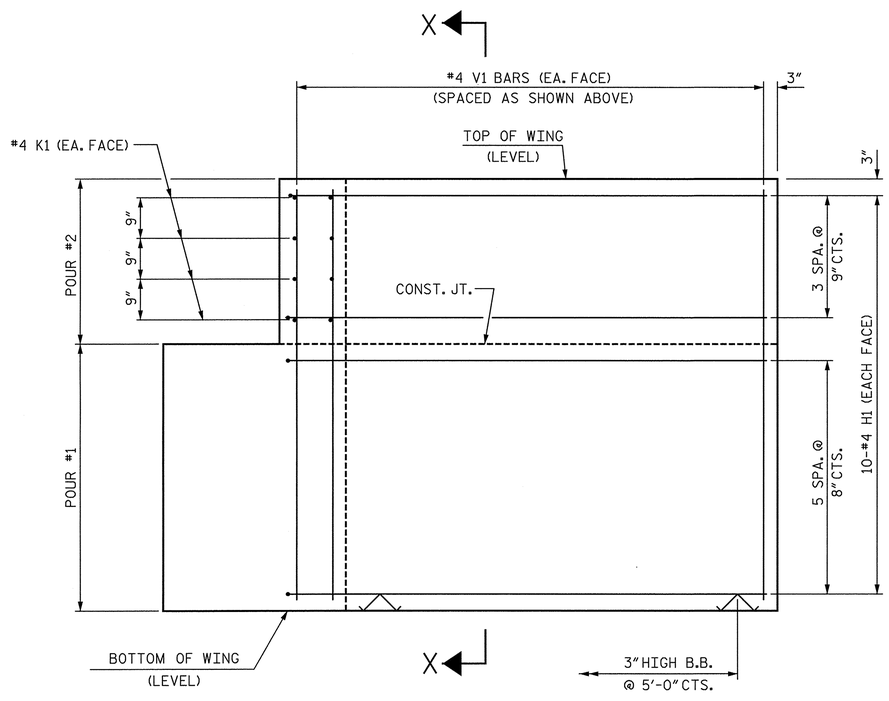

ELEVATION OF WING (W1)

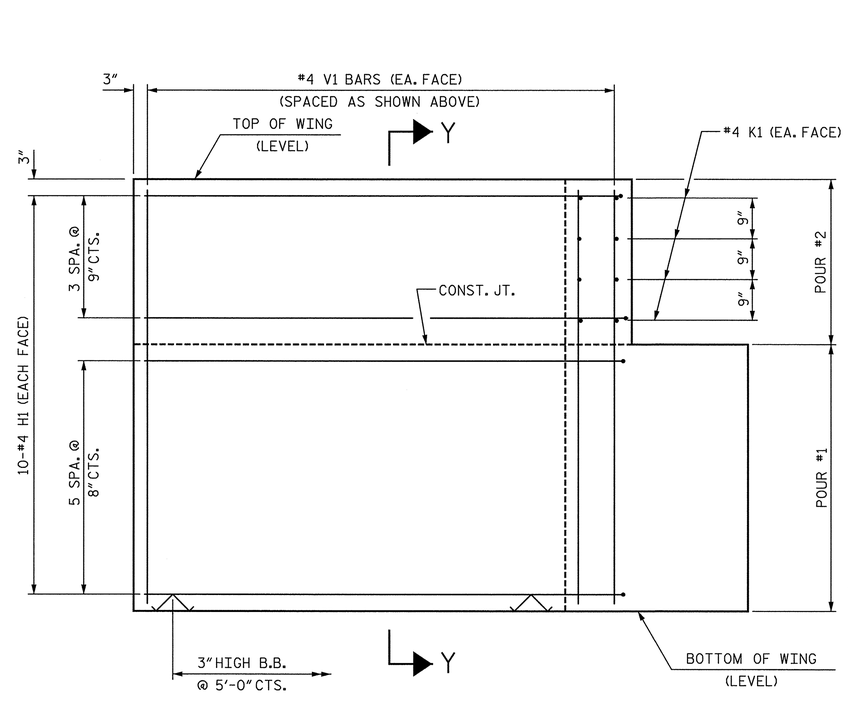

ELEVATION OF WING (W2)

WING DETAILS

PROJECT NO. BD-5110AB

UNION COUNTY

STATION: 12+59.50 -L-

SHEET 3 OF 4

STATE OF NORTH CAROLINA
DEPARTMENT OF TRANSPORTATION
RALEIGH

SUBSTRUCTURE

END BENT
WING DETAILS

NORTH CAROLINA PROFESSIONAL SEAL 038640 ENGINEER J. WESLEY JONES
1-10-14

STV / Ralph Whitehead Associates, Inc.
900 West Trade Street, Suite 715
Charlotte, NC 28202
NC License Number F-0991

REVISIONS						SHEET NO.
NO.	BY:	DATE:	NO.	BY:	DATE:	S-12
1			3			TOTAL SHEETS
2			4			14

DRAWN BY : JDE DATE : 04-13
CHECKED BY : JWJ DATE : 11-13

jjones 1/10/2014 12:55:59 PM R:\Structures\Finals\(12) End Bent 1& 2 Wings.dgn

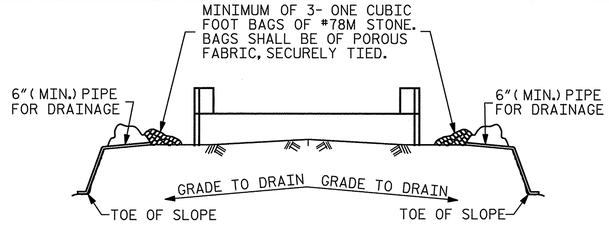

BAGGED STONE AND PIPE SHALL BE PLACED IMMEDIATELY AFTER COMPLETION OF END BENT EXCAVATION. PIPE MAY BE EITHER CONCRETE, CORRUGATED STEEL, CORRUGATED ALUMINUM ALLOY, OR CORRUGATED PLASTIC. PERFORATED PIPE WILL NOT BE ALLOWED.

BAGGED STONE SHALL REMAIN IN PLACE UNTIL THE ENGINEER DIRECTS THAT IT BE REMOVED. THE CONTRACTOR SHALL REMOVE AND DISPOSE OF SILT ACCUMULATIONS AT BAGGED STONE WHEN SO DIRECTED BY THE ENGINEER. BAGS SHALL BE REMOVED AND REPLACED WHENEVER THE ENGINEER DETERMINES THAT THEY HAVE DETERIORATED AND LOST THEIR EFFECTIVENESS.

NO SEPARATE PAYMENT WILL BE MADE FOR THIS WORK AND THE ENTIRE COST OF THIS WORK SHALL BE INCLUDED IN THE UNIT CONTRACT PRICE BID FOR THE SEVERAL PAY ITEMS.

TEMPORARY DRAINAGE AT END BENT

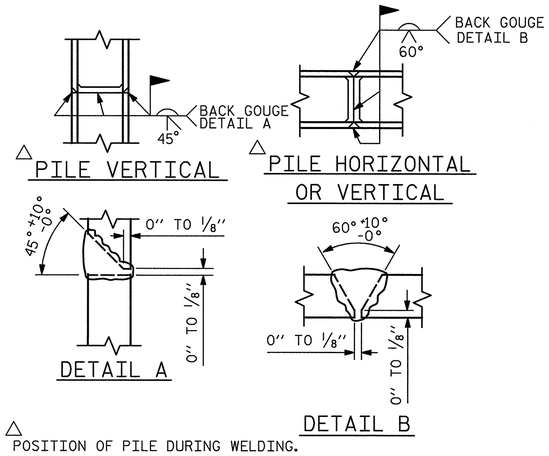

△ POSITION OF PILE DURING WELDING.

PILE SPLICE DETAILS

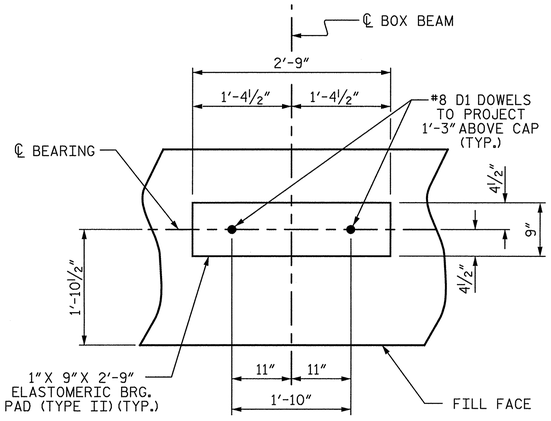

DETAIL "A"

(END BENT No. 1 SHOWN, END BENT No. 2 SIMILAR BY ROTATION)

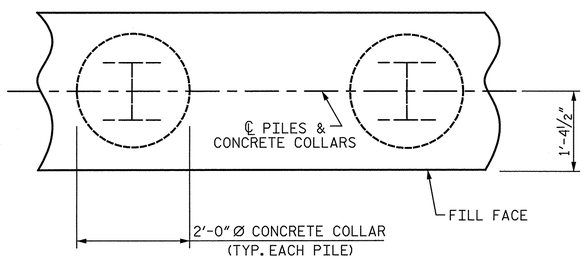

PLAN

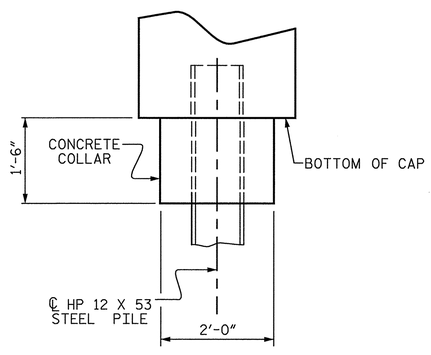

ELEVATION

CORROSION PROTECTION FOR STEEL PILES DETAIL

(END BENT No. 1 SHOWN, END BENT No. 2 SIMILAR BY ROTATION)

BAR TYPES

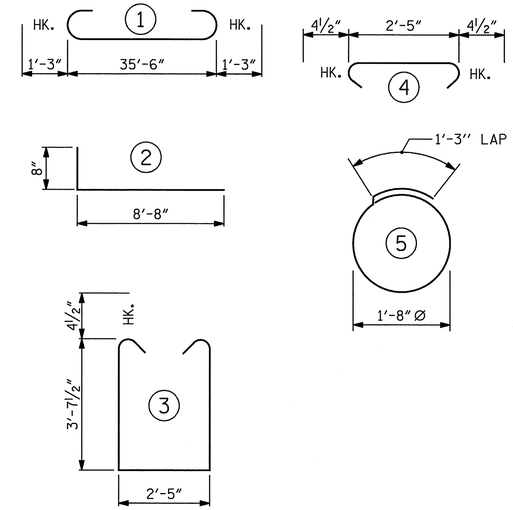

ALL BAR DIMENSIONS ARE OUT TO OUT.

END BENT No. 1		END BENT No. 2	
HP 12 X 53 STEEL PILES		HP 12 X 53 STEEL PILES	
NO: 5	LIN. FT.= 80	NO: 5	LIN. FT.= 80

BILL OF MATERIAL FOR ONE END BENT

BAR	NO.	SIZE	TYPE	LENGTH	WEIGHT
B1	8	#9	1	38'-0"	1034
B2	28	#4	STR	19'-1"	357
B3	9	#4	STR	2'-5"	15
D1	20	#8	STR	2'-3"	120
H1	40	#4	2	9'-4"	249
K1	16	#4	STR	2'-11"	31
S1	46	#4	3	10'-5"	320
S2	46	#4	4	3'-2"	97
S3	20	#4	5	6'-6"	87
V1	52	#4	STR	6'-2"	214

REINFORCING STEEL (FOR ONE END BENT) 2524 LBS.

CLASS A CONCRETE BREAKDOWN (FOR ONE END BENT)

POUR #1 CAP, LOWER PART OF WINGS & COLLARS 17.9 C.Y.

POUR #2 UPPER PART OF WINGS 2.5 C.Y.

TOTAL CLASS A CONCRETE 20.4 C.Y.

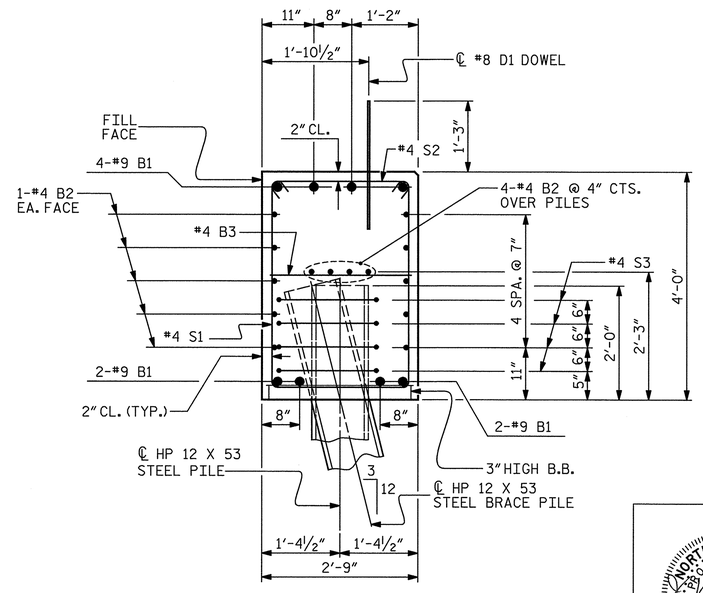

SECTION A-A

(CONCRETE COLLAR NOT SHOWN FOR CLARITY. SEE "CORROSION PROTECTION FOR STEEL PILES DETAIL.")

PROJECT NO. BD-5110AB

UNION COUNTY

STATION: 12+59.50 -L-

SHEET 4 OF 4

STATE OF NORTH CAROLINA
DEPARTMENT OF TRANSPORTATION
RALEIGH

SUBSTRUCTURE

END BENT No. 1 & 2 DETAILS

NORTH CAROLINA PROFESSIONAL SEAL 038640 ENGINEER J. WESLEY JONES 1-10-14

STV/Ralph Whitehead Associates, Inc.
900 West Trade Street, Suite 715
Charlotte, NC 28202
NC License Number F-0991

REVISIONS						
NO.	BY:	DATE:	NO.	BY:	DATE:	SHEET NO. S-13
1			3			TOTAL SHEETS 14
2			4			

DRAWN BY : JDE DATE : 04-13
CHECKED BY : JWJ DATE : 11-13

JJones 1/9/2014 5:42:57 PM R:\Structures\Finals\(13) End Bent 1 & 2 Details.dgn

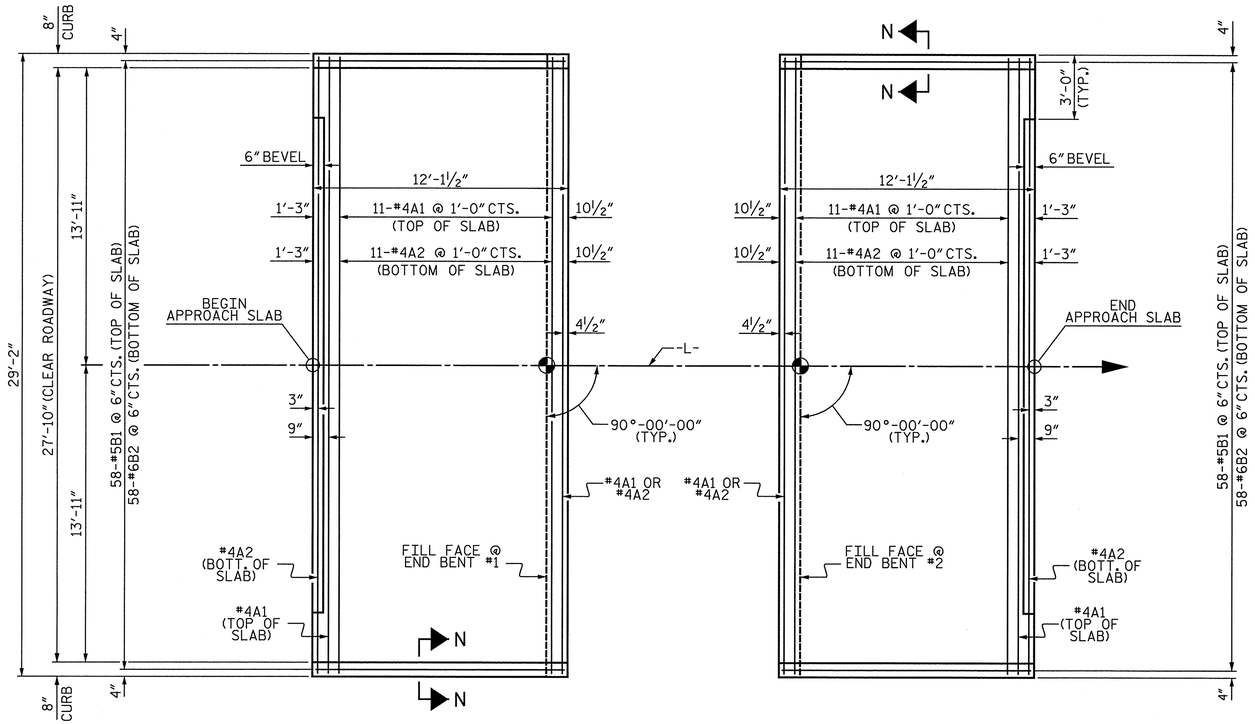

PLAN @ END BENT #1

PLAN @ END BENT #2

DIMENSIONS SHOWN ARE TYPICAL FOR BOTH APPROACH SLABS

NOTES

FOR BRIDGE APPROACH FILL INCLUDING GEOTEXTILE, 4"Ø DRAINAGE PIPE, AND #78M STONE BACKFILL, SEE ROADWAY PLANS.

GEOTEXTILE SHALL BE TYPE 1IN ACCORDANCE WITH THE STANDARD SPECIFICATIONS SECTION 1056.

#78M STONE BACKFILL (CLASS V SELECT MATERIAL) SHALL BE IN ACCORDANCE WITH STANDARD SPECIFICATIONS SECTION 1016.

#78M STONE BACKFILL IS TO BE CONTINUOUS ALONG FILL FACE OF BACKWALL FROM OUTSIDE EDGE TO OUTSIDE EDGE OF APPROACH SLAB.

FOR THE 4"Ø DRAINAGE PIPE OUTLET(S), SEE ROADWAY STANDARD DRAWINGS.

AREA BETWEEN THE WINGWALL AND APPROACH SLAB SHALL BE GRADED TO DRAIN THE WATER AWAY FROM THE FILL FACE OF THE BRIDGE AND SHALL BE PAVED. SEE ROADWAY PLANS.

APPROACH SLAB GROOVING IS NOT REQUIRED.

BILL OF MATERIAL

APPROACH SLAB AT EB #1

BAR	NO.	SIZE	TYPE	LENGTH	WEIGHT
* A1	13	#4	STR	28'-10"	250
A2	13	#4	STR	28'-10"	250
* B1	58	#5	STR	11'-2"	676
B2	58	#6	STR	11'-8"	1016
REINFORCING STEEL				LBS.	1266
* EPOXY COATED REINFORCING STEEL				LBS.	926
CLASS AA CONCRETE				C. Y.	20.2

APPROACH SLAB AT EB #2

BAR	NO.	SIZE	TYPE	LENGTH	WEIGHT
* A1	13	#4	STR	28'-10"	250
A2	13	#4	STR	28'-10"	250
* B1	58	#5	STR	11'-2"	676
B2	58	#6	STR	11'-8"	1016
REINFORCING STEEL				LBS.	1266
* EPOXY COATED REINFORCING STEEL				LBS.	926
CLASS AA CONCRETE				C. Y.	20.2

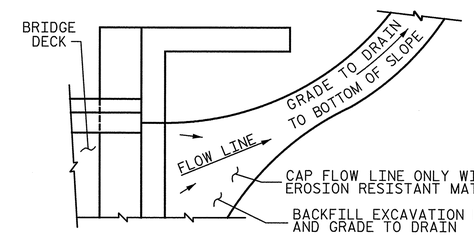

NOTE: IF THE APPROACH SLAB IS NOT CONSTRUCTED IMMEDIATELY AFTER THE BACKFILLING OF THE END BENT EXCAVATION, GRADE TO DRAIN TO THE BOTTOM OF THE SLOPE AND PROVIDE EROSION RESISTANT MATERIAL, SUCH AS FIBERGLASS ROVING OR AS DIRECTED BY THE ENGINEER TO PREVENT SOIL EROSION AND TO PROTECT THE AREA ADJACENT TO THE STRUCTURE. THE CONTRACTOR WILL BE REQUIRED TO REMOVE THESE MATERIALS PRIOR TO CONSTRUCTION OF THE APPROACH SLAB.

TEMPORARY DRAINAGE DETAIL

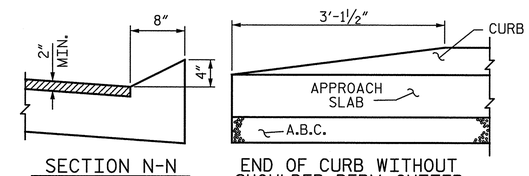

SECTION N-N

END OF CURB WITHOUT SHOULDER BERM GUTTER

CURB DETAILS

SPLICE LENGTHS		
BAR SIZE	EPOXY COATED	UNCOATED
#4	2'-0"	1'-9"
#5	2'-6"	2'-2"
#6	3'-10"	2'-7"

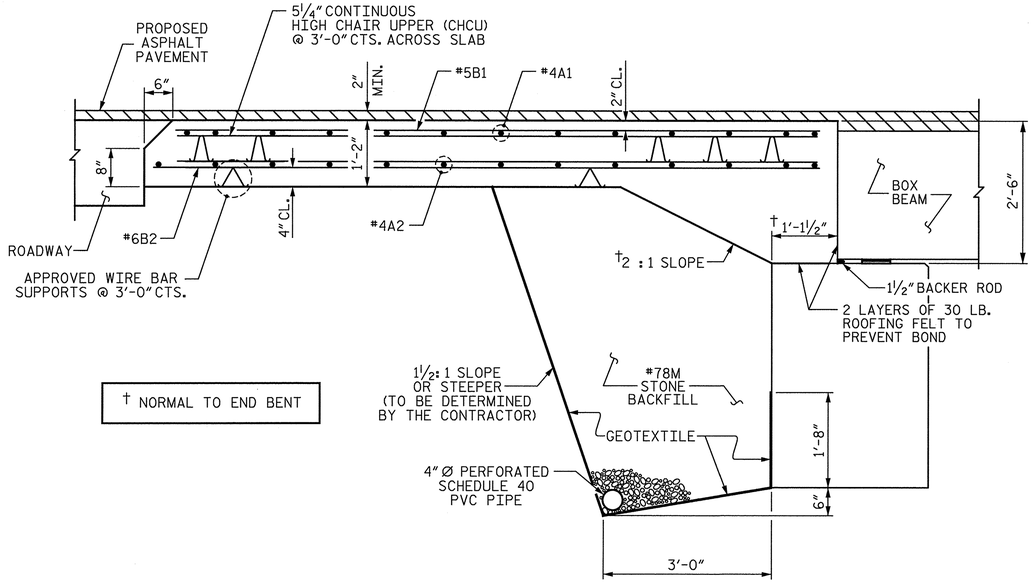

† NORMAL TO END BENT

SECTION THRU SLAB

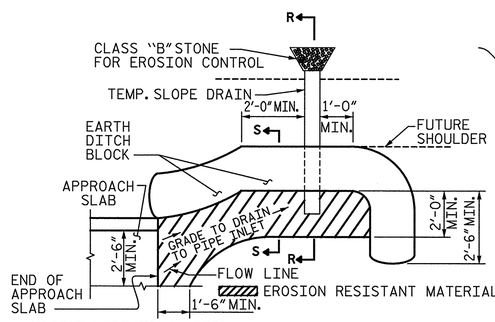

NOTE: IMMEDIATELY AFTER THE CONSTRUCTION OF THE APPROACH SLAB, THE CONTRACTOR SHALL PROVIDE TEMPORARY BERM AND SLOPE DRAIN. CONTRACTOR SHALL GRADE TO PIPE INLET AND PROVIDE EROSION RESISTANT MATERIAL AS SHOWN. THE EROSION RESISTANT MATERIAL SHALL BE EITHER 1) ASPHALT PLANT MIX, TYPE 1 OR TYPE 2, MIN. 2" DEPTH, 2) EROSION CONTROL MAT, OR 3) CONCRETE, AS DIRECTED BY THE ENGINEER. THE SLOPE DRAIN SHALL CONSIST OF A NON-PERFORATED TEMPORARY DRAINAGE PIPE, 12 INCHES IN DIAMETER.

PLAN VIEW

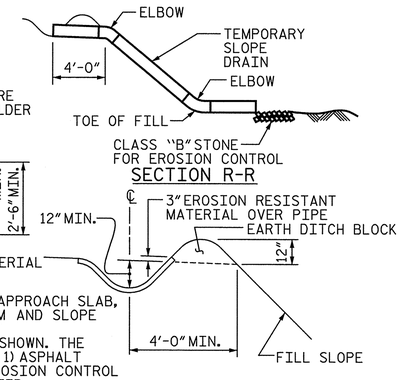

SECTION S-S

TEMPORARY BERM AND SLOPE DRAIN DETAILS

(TO BE USED WHEN SHOULDER BERM GUTTER IS REQUIRED)

PROJECT NO. BD-5110AB

UNION COUNTY

STATION: 12+59.50 -L-

STATE OF NORTH CAROLINA
DEPARTMENT OF TRANSPORTATION
RALEIGH

BRIDGE APPROACH SLAB FOR PRESTRESSED CONCRETE CORED SLAB UNIT (SUB-REGIONAL TIER) 90° SKEW

NORTH CAROLINA PROFESSIONAL SEAL 038640 ENGINEER WESLEY JONES 1-10-14

STV / Ralph Whitehead Associates, Inc.
900 West Trade Street, Suite 715
Charlotte, NC 28202
NC License Number F-0991

REVISIONS							
NO.	BY:	DATE:	NO.	BY:	DATE:	SHEET NO.	S-14
1			3			TOTAL SHEETS	14
2			4				

DRAWN BY : JWJ DATE : 04-13
CHECKED BY : JTG DATE : 04-13

R:\Structures\FInals\(14) Approach Slab.dgn 5:43:09 PM 1/9/2014 JJones

STANDARD NOTES

DESIGN DATA:

SPECIFICATIONS	A.A.S.H.T.O. (CURRENT)
LIVE LOAD	SEE PLANS
IMPACT ALLOWANCE	SEE A.A.S.H.T.O.
STRESS IN EXTREME FIBER OF	
STRUCTURAL STEEL - AASHTO M270 GRADE 36	20,000 LBS. PER SQ. IN.
- AASHTO M270 GRADE 50W	27,000 LBS. PER SQ. IN.
- AASHTO M270 GRADE 50	27,000 LBS. PER SQ. IN.
REINFORCING STEEL IN TENSION	
GRADE 60	24,000 LBS. PER SQ. IN.
CONCRETE IN COMPRESSION	1,200 LBS. PER SQ. IN.
CONCRETE IN SHEAR	SEE A.A.S.H.T.O.
STRUCTURAL TIMBER - TREATED OR	
UNTREATED - EXTREME FIBER STRESS	1,800 LBS. PER SQ. IN.
COMPRESSION PERPENDICULAR TO GRAIN OF TIMBER	375 LBS. PER SQ. IN.
EQUIVALENT FLUID PRESSURE OF EARTH	30 LBS. PER CU. FT. (MINIMUM)

MATERIAL AND WORKMANSHIP:

EXCEPT AS MAY OTHERWISE BE SPECIFIED ON PLANS OR IN THE SPECIAL PROVISIONS, ALL MATERIAL AND WORKMANSHIP SHALL BE IN ACCORDANCE WITH THE 2012 "STANDARD SPECIFICATIONS FOR ROADS AND STRUCTURES" OF THE N. C. DEPARTMENT OF TRANSPORTATION.

STEEL SHEET PILING FOR PERMANENT OR TEMPORARY APPLICATIONS SHALL BE HOT ROLLED.

CONCRETE:

UNLESS OTHERWISE REQUIRED ON PLANS, CLASS A CONCRETE SHALL BE USED FOR ALL PORTIONS OF ALL STRUCTURES WITH THE EXCEPTION THAT: CLASS AA CONCRETE SHALL BE USED IN BRIDGE SUPERSTRUCTURES, ABUTMENT BACKWALLS, AND APPROACH SLABS; AND CLASS B CONCRETE SHALL BE USED FOR SLOPE PROTECTION AND RIP RAP.

CONCRETE CHAMFERS:

UNLESS OTHERWISE NOTED ON THE PLANS, ALL EXPOSED CORNERS ON STRUCTURES SHALL BE CHAMFERED 3/4" WITH THE FOLLOWING EXCEPTIONS: TOP CORNERS OF CURBS MAY BE ROUNDED TO 1-1/2" RADIUS WHICH IS BUILT INTO CURB FORMS; CORNERS OF TRANSVERSE FLOOR EXPANSION JOINTS SHALL BE ROUNDED WITH A 1/4" FINISHING TOOL UNLESS OTHERWISE REQUIRED ON PLANS; AND CORNERS OF EXPANSION JOINTS IN THE ROADWAY FACES AND TOPS OF CURBS AND SIDEWALKS SHALL BE ROUNDED TO A 1/4" RADIUS WITH A FINISHING STONE OR TOOL UNLESS OTHERWISE REQUIRED ON PLANS.

DOWELS:

DOWELS WHEN INDICATED ON PLANS AS FOR CULVERT EXTENSIONS, SHALL BE EMBEDDED AT LEAST 12" INTO THE OLD CONCRETE AND GROUTED INTO PLACE WITH 1:2 CEMENT MORTAR.

ALLOWANCE FOR DEAD LOAD DEFLECTION, SETTLEMENT, ETC. IN CASTING SUPERSTRUCTURES:

BRIDGES SHALL BE BUILT ON THE GRADE OR VERTICAL CURVE SHOWN ON PLANS. SLABS, CURBS AND PARAPETS SHALL CONFORM TO THE GRADE OR CURVE.

ALL DIMENSIONS WHICH ARE GIVEN IN SECTION AND ARE AFFECTED BY DEAD LOAD DEFLECTIONS ARE DIMENSIONS AT CENTER LINE OF BEARING UNLESS OTHERWISE NOTED ON PLANS. IN SETTING FORMS FOR STEEL BEAM BRIDGES AND PRESTRESSED CONCRETE GIRDER BRIDGES, ADJUSTMENTS SHALL BE MADE DUE TO THE DEAD LOAD DEFLECTIONS FOR THE ELEVATIONS SHOWN. WHERE BLOCKS ARE SHOWN OVER BEAMS FOR BUILDING UP TO THE SLAB, THE VERTICAL DIMENSIONS OF THE BLOCKS SHALL BE ADJUSTED BETWEEN BEARINGS TO COMPENSATE FOR DEAD LOAD DEFLECTIONS, VERTICAL CURVE ORDINATE, AND ACTUAL BEAM CAMBER. WHERE BOTTOM OF SLAB IS IN LINE WITH BOTTOM OF TOP FLANGES, DEPTH OF SLAB BETWEEN BEARINGS SHALL BE ADJUSTED TO COMPENSATE FOR DEAD LOAD DEFLECTION, VERTICAL CURVE ORDINATE, AND ACTUAL BEAM CAMBER.

IN SETTING FALSEWORK AND FORMS FOR REINFORCED CONCRETE SPANS, AN ALLOWANCE SHALL BE MADE FOR DEAD LOAD DEFLECTIONS, SETTLEMENT OF FALSEWORK, AND PERMANENT CAMBER WHICH SHALL BE PROVIDED FOR IN ADDITION TO THE ELEVATIONS SHOWN. AFTER REMOVAL OF THE FALSEWORK, THE FINISHED STRUCTURES SHALL CONFORM TO THE PROFILE AND ELEVATIONS SHOWN ON THE PLANS AND CONSTRUCTION ELEVATIONS FURNISHED BY THE ENGINEER.

DETAILED DRAWINGS FOR FALSEWORK OR FORMS FOR BRIDGE SUPERSTRUCTURE AND ANY STRUCTURE OR PARTS OF A STRUCTURE AS NOTED ON THE PLANS SHALL BE SUBMITTED TO THE ENGINEER FOR APPROVAL BEFORE CONSTRUCTION OF THE FALSEWORK OR FORMS IS STARTED.

REINFORCING STEEL:

ALL REINFORCING STEEL SHALL BE DEFORMED. DIMENSIONS RELATIVE TO PLACEMENT OF REINFORCING ARE TO CENTERS OF BARS UNLESS OTHERWISE INDICATED IN THE PLANS. DIMENSIONS ON BAR DETAILS ARE TO CENTERS OF BARS OR ARE OUT TO OUT AS INDICATED ON PLANS.

WIRE BAR SUPPORTS SHALL BE PROVIDED FOR REINFORCING STEEL WHERE INDICATED ON THE PLANS. WHEN BAR SUPPORT PIECES ARE PLACED IN CONTINUOUS LINES, THEY SHALL BE SO PLACED THAT THE ENDS OF THE SUPPORTING WIRES SHALL BE LAPPED TO LOCK LEGS ON ADJOINING PIECES.

STRUCTURAL STEEL:

AT THE CONTRACTOR'S OPTION, HE MAY SUBSTITUTE 7/8" Ø SHEAR STUDS FOR THE 3/4" Ø STUDS SPECIFIED ON THE PLANS. THIS SUBSTITUTION SHALL BE MADE AT THE RATE OF 3 - 7/8" Ø STUDS FOR 4 - 3/4" Ø STUDS, AND STUD SPACING CHANGES SHALL BE MADE AS NECESSARY TO PROVIDE THE SAME EQUIVALENT NUMBER OF 7/8" Ø STUDS ALONG THE BEAM AS SHOWN FOR 3/4" Ø STUDS BASED ON THE RATIO OF 3 - 7/8" Ø STUDS FOR 4 - 3/4" Ø STUDS. STUDS OF THE LENGTH SPECIFIED ON THE PLANS MUST BE PROVIDED. THE MAXIMUM SPACING SHALL BE 2'-0".

EXCEPT AT THE INTERIOR SUPPORTS OF CONTINUOUS BEAMS WHERE THE COVER PLATE IS IN CONTACT WITH BEARING PLATE, THE CONTRACTOR MAY, AT HIS OPTION, SUBSTITUTE FOR THE COVER PLATES DESIGNATED ON THE PLANS COVER PLATES OF THE EQUIVALENT AREA PROVIDED THESE PLATES ARE AT LEAST 5/16" IN THICKNESS AND DO NOT EXCEED A WIDTH EQUAL TO THE FLANGE WIDTH LESS 2" OR A THICKNESS EQUAL TO 2 TIMES THE FLANGE THICKNESS. THE SIZE OF FILLET WELDS SHALL CONFORM TO THE REQUIREMENTS OF THE CURRENT ANSI/AASHTO/AWS "BRIDGE WELDING CODE". ELECTROSLAG WELDING WILL NOT BE PERMITTED.

WITH THE SOLE EXCEPTION OF EDGES AT SURFACES WHICH BEAR ON OTHER SURFACES, ALL SHARP EDGES AND ENDS OF SHAPES AND PLATES SHALL BE SLIGHTLY ROUNDED BY SUITABLE MEANS TO A RADIUS OF APPROXIMATELY 1/16 INCH OR EQUIVALENT FLAT SURFACE AT A SUITABLE ANGLE PRIOR TO PAINTING, GALVANIZING, OR METALLIZING.

HANDRAILS AND POSTS:

METAL STANDARDS AND FACES OF THE CONCRETE END POSTS FOR THE METAL RAIL SHALL BE SET NORMAL TO THE GRADE OF THE CURB, UNLESS OTHERWISE SHOWN ON PLANS. THE METAL RAIL AND TOPS OF CONCRETE POSTS USED WITH THE ALUMINUM RAIL SHALL BE BUILT PARALLEL TO THE GRADE OF THE CURB.

METAL HANDRAILS SHALL BE IN ACCORDANCE WITH THE PLANS. RAILS SHALL BE AS MANUFACTURED FOR BRIDGE RAILING. CASTINGS SHALL BE OF A UNIFORM APPEARANCE. FINS AND OTHER DEFORMATIONS RESULTING FROM CASTING OR OTHERWISE SHALL BE REMOVED IN A MANNER SO THAT A UNIFORM COLORING OF THE COMPLETED CASTING SHALL BE OBTAINED. CASTINGS WITH DISCOLORATIONS OR OF NON-UNIFORM COLORING WILL NOT BE ACCEPTED. CERTIFIED MILL REPORTS ARE REQUIRED FOR METAL RAILS AND POSTS.

SPECIAL NOTES:

GENERALLY, IN CASE OF DISCREPANCY, THIS STANDARD SHEET OF NOTES SHALL GOVERN OVER THE SPECIFICATIONS, BUT THE REMAINDER OF THE PLANS SHALL GOVERN OVER NOTES HEREON, AND SPECIAL PROVISIONS SHALL GOVERN OVER ALL. SEE SPECIFICATIONS ARTICLE 105-4.

ENGLISH

JANUARY, 1990

REV. 6-16-95 EEM (✓) RGW REV. 5-7-03 RWW (✓) JTE REV. 10-1-11 MAA (✓) GM
REV. 8-16-99 RWW (✓) LES REV. 5-1-06 TLA (✓) GM

1/9/2014
R:\Structures\Finals\Standard Notes.dgn
JJones