TIP PROJECT: BD-5110K

See Sheet 1-A For Index of Sheets
See Sheet 1-B For Standard Symbology Sheet

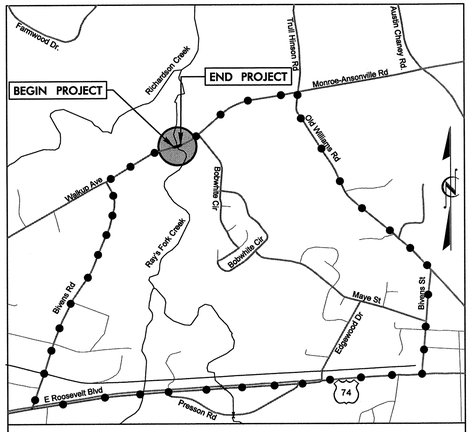

VICINITY MAP N.T.S.

FINAL PLANS

STATE OF NORTH CAROLINA
DIVISION OF HIGHWAYS

UNION COUNTY

STATE	STATE PROJECT REFERENCE NO.	SHEET NO.	TOTAL SHEETS
N.C.	BD-5110K	1	

STATE PROJ. NO.	F.A. PROJ. NO.	DESCRIPTION
45356.1.11	BRSTP-1751(3)	P.E.
45356.2.11	BRSTP-1751(3)	R/W & UTILITIES
45356.3.11	BRSTP-1751(3)	CONST.

LOCATION: BRIDGE #077 OVER RAY'S FORK CREEK ON SR 1751 (MONROE-ANSONVILLE ROAD)

TYPE OF WORK: GRADING, PAVING, DRAINAGE & STRUCTURE

NAD 83 NSRS 2007

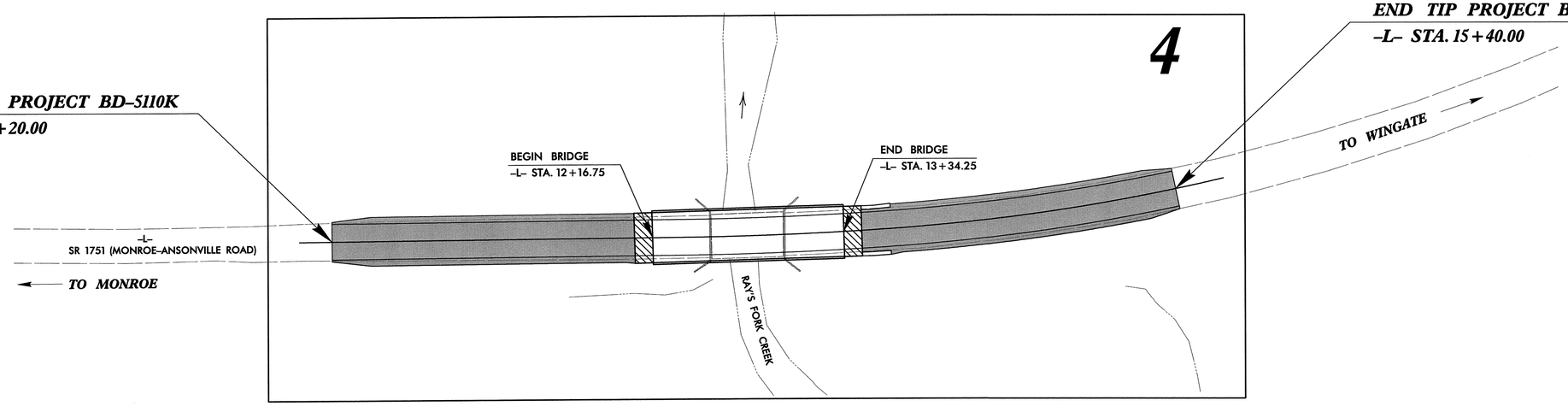

CONTRACT:

FINAL PLANS
8/6/2012

GRAPHIC SCALES

20 10 0 20 40
PLANS

20 10 0 20 40
PROFILE (HORIZONTAL)

4 2 0 4 8
PROFILE (VERTICAL)

DESIGN DATA

ADT 2012 = 7,060
ADT 2035 = 12,650
DHV = N/A
D = N/A
T = 7%
V = 55 MPH

FUNC. CLASSIFICATION: MAJOR COLLECTOR

PROJECT LENGTH

LENGTH OF ROADWAY TIP PROJECT BD-5110K = 0.069 MILES
LENGTH OF STRUCTURE TIP PROJECT BD-5110K = 0.022 MILES
TOTAL LENGTH OF TIP PROJECT BD-5110K = 0.091 MILES

NCDOT CONTACT: LOUIS L. MITCHELL, PE
Division Bridge Manager

PLANS PREPARED FOR THE NCDOT BY:
STV/RALPH WHITEHEAD ASSOCIATES, INC.
1000 West Morehead St., Ste. 200, Charlotte NC, 28208
NC License Number F-0991

2012 STANDARD SPECIFICATIONS

RIGHT OF WAY DATE: FEBRUARY 22, 2012

LETTING DATE: SEPTEMBER 19, 2012

NIKKI T. HONEYCUTT, PE
PROJECT ENGINEER

RICHARD A. ODYNSKI, PE
PROJECT DESIGN ENGINEER

HYDRAULICS ENGINEER
NORTH CAROLINA PROFESSIONAL SEAL 038053 ENGINEER DAVIN C. MORRISON
8/7/12
SIGNATURE: Davin Morrison P.E.

ROADWAY DESIGN ENGINEER
NORTH CAROLINA PROFESSIONAL SEAL 039234 ENGINEER NIKKI T. HONEYCUTT
SIGNATURE: Nikki T. Honeycutt P.E.
7 AUG 12

STATE OF NORTH CAROLINA DEPARTMENT OF TRANSPORTATION

PROJECT REFERENCE NO.	SHEET NO.
BD-5110K	1-A
R/W SHEET NO.	

STV/ Ralph Whitehead Associates, Inc.
1000 West Morehead St., Ste. 200
Charlotte, NC 28208
NC License Number F-0991

ROADWAY DESIGN ENGINEER
NORTH CAROLINA PROFESSIONAL SEAL 039234 ENGINEER NIKKI T. HONEYCUTT
7AUG12

INDEX OF SHEETS

SHEET NUMBER	SHEET
1	TITLE SHEET
1-A	INDEX OF SHEETS, GENERAL NOTES, AND LIST OF STANDARD DRAWINGS
1-B	CONVENTIONAL SYMBOLS
2	DETAIL SHEET
3	SUMMARIES AND TYPICALS
4	PLAN AND PROFILE SHEET
TCP-1 THRU TCP-2	TRAFFIC CONTROL PLANS
UC-1 THRU UC-3	UTILITY PLANS
UO-1 THRU UO-2	UTILITIES BY OTHERS
EC-1 THRU EC-4	EROSION CONTROL PLANS
X-1 THRU X-2	CROSS-SECTIONS

GENERAL NOTES

GENERAL NOTES: 2012 SPECIFICATIONS
EFFECTIVE: 01-01-2012

GRADE LINE:
GRADING AND SURFACING:

THE GRADE LINES SHOWN DENOTE THE FINISHED ELEVATION OF THE PROPOSED SURFACING AT GRADE POINTS SHOWN ON THE TYPICAL SECTIONS. GRADE LINES MAY BE ADJUSTED AT THEIR BEGINNING AND ENDING AND AT STRUCTURES AS DIRECTED BY THE ENGINEER IN ORDER TO SECURE A PROPER TIE-IN.

CLEARING:

CLEARING ON THIS PROJECT SHALL BE PERFORMED TO THE LIMITS ESTABLISHED BY METHOD II.

SUPERELEVATION:

ALL CURVES ON THIS PROJECT SHALL BE SUPERELEVATED IN ACCORDANCE WITH STD. NO. 225.04 USING THE RATE OF SUPERELEVATION AND RUNOFF SHOWN ON THE PLANS. SUPERELEVATION IS TO BE REVOLVED ABOUT THE GRADE POINTS SHOWN ON THE TYPICAL SECTIONS.

SHOULDER CONSTRUCTION:

ASPHALT, EARTH, AND CONCRETE SHOULDER CONSTRUCTION ON THE HIGH SIDE OF SUPERELEVATED CURVES SHALL BE IN ACCORDANCE WITH STD. NO. 560.01.

GUARDRAIL:

THE GUARDRAIL LOCATIONS SHOWN ON THE PLANS MAY BE ADJUSTED DURING CONSTRUCTION AS DIRECTED BY THE ENGINEER. THE CONTRACTOR SHOULD CONSULT WITH THE ENGINEER PRIOR TO ORDERING GUARDRAIL MATERIAL.

END BENTS:

THE ENGINEER SHALL CHECK THE STRUCTURE END BENT PLANS, DETAILS, AND CROSS-SECTION PRIOR TO SETTING OF THE SLOPE STAKES FOR THE EMBANKMENT OR EXCAVATION APPROACHING A BRIDGE.

RIGHT-OF-WAY MARKERS:

ALL RIGHT-OF-WAY MARKERS ON THIS PROJECT SHALL BE PLACED BY CONTRACT.

STANDARD DRAWINGS

2012 ROADWAY ENGLISH STANDARD DRAWINGS EFF. January, 2012

The following Roadway Standards as appear in "Roadway Standard Drawings" Highway Design Branch - N. C. Department of Transportation - Raleigh, N. C., Dated January, 2012 are applicable to this project and by reference hereby are considered a part of these plans:

STD.NO.	TITLE
DIVISION 2 - EARTHWORK	
200.02	Method of Clearing - Method II
225.02	Guide for Grading Subgrade - Secondary and Local
225.04	Method of Obtaining Superelevation - Two Lane Pavement
DIVISION 5 - SUBGRADE, BASES AND SHOULDERS	
560.01	Method of Shoulder Construction - High Side of Superelevated Curve - Method I
DIVISION 8 - INCIDENTALS	
840.29	Frames and Narrow Slot Flat Grates
840.35	Traffic Bearing Grated Drop Inlet
846.01	Concrete Curb, Gutter and Curb & Gutter
862.01	Guardrail Placement
862.02	Guardrail Installation
862.03	Structure Anchor Units
876.02	Guide for Rip Rap at Pipe Outlets
DIVISION 11 - WORK ZONE TRAFFIC CONTROL	
1110.01	Stationary Work Zone Signs - Mounting Height & Lateral Clearance
1145.01	Barricades - Type III
DIVISION 16 - EROSION CONTROL AND ROADSIDE DEVELOPMENT	
1605.01	Temporary Silt Fence
1606.01	Special Sediment Control Fence
1607.01	Gravel Construction Entrance
1622.01	Guide for Temporary Berms and Slope Drains
1630.06	Special Stilling Basin
1632.03	Rock Inlet Sediment Trap Type C

PROJECT REFERENCE NO.	SHEET NO.
BD-5110K	1-B

Note: Not to Scale

S.U.E. = Subsurface Utility Engineering

STATE OF NORTH CAROLINA
DIVISION OF HIGHWAYS

CONVENTIONAL PLAN SHEET SYMBOLS

BOUNDARIES AND PROPERTY:

- State Line
- County Line
- Township Line
- City Line
- Reservation Line
- Property Line
- Existing Iron Pin — EIP
- Property Corner
- Property Monument — ECM
- Parcel/Sequence Number — 123
- Existing Fence Line
- Proposed Woven Wire Fence
- Proposed Chain Link Fence
- Proposed Barbed Wire Fence
- Existing Wetland Boundary — WLB
- Proposed Wetland Boundary — WLB
- Existing Endangered Animal Boundary — EAB
- Existing Endangered Plant Boundary — EPB
- Known Soil Contamination: Boundary or Site
- Potential Soil Contamination: Boundary or Site

BUILDINGS AND OTHER CULTURE:

- Gas Pump Vent or U/G Tank Cap
- Sign — S
- Well — W
- Small Mine
- Foundation
- Area Outline
- Cemetery
- Building
- School
- Church
- Dam

HYDROLOGY:

- Stream or Body of Water
- Hydro, Pool or Reservoir
- Jurisdictional Stream — JS
- Buffer Zone 1 — BZ 1
- Buffer Zone 2 — BZ 2
- Flow Arrow
- Disappearing Stream
- Spring
- Wetland
- Proposed Lateral, Tail, Head Ditch — FLOW
- False Sump

RAILROADS:

- Standard Gauge — CSX TRANSPORTATION
- RR Signal Milepost — MILEPOST 35
- Switch — SWITCH
- RR Abandoned
- RR Dismantled

RIGHT OF WAY:

- Baseline Control Point
- Existing Right of Way Marker
- Existing Right of Way Line
- Proposed Right of Way Line — RW
- Proposed Right of Way Line with Iron Pin and Cap Marker — RW
- Proposed Right of Way Line with Concrete or Granite Marker — RW
- Existing Control of Access — CA
- Proposed Control of Access — CA
- Existing Easement Line — E
- Proposed Temporary Construction Easement — E
- Proposed Temporary Drainage Easement — TDE
- Proposed Permanent Drainage Easement — PDE
- Proposed Permanent Drainage / Utility Easement — DUE
- Proposed Permanent Utility Easement — PUE
- Proposed Temporary Utility Easement — TUE
- Proposed Aerial Utility Easement — AUE
- Proposed Permanent Easement with Iron Pin and Cap Marker

ROADS AND RELATED FEATURES:

- Existing Edge of Pavement
- Existing Curb
- Proposed Slope Stakes Cut — C
- Proposed Slope Stakes Fill — F
- Proposed Curb Ramp — CR
- Curb Cut Future Ramp — CCFR
- Existing Metal Guardrail
- Proposed Guardrail
- Existing Cable Guiderail
- Proposed Cable Guiderail
- Equality Symbol
- Pavement Removal

VEGETATION:

- Single Tree
- Single Shrub
- Hedge
- Woods Line
- Orchard
- Vineyard — Vineyard

EXISTING STRUCTURES:

MAJOR:

- Bridge, Tunnel or Box Culvert — CONC
- Bridge Wing Wall, Head Wall and End Wall — CONC WW

MINOR:

- Head and End Wall — CONC HW
- Pipe Culvert
- Footbridge
- Drainage Box: Catch Basin, DI or JB — CB
- Paved Ditch Gutter
- Storm Sewer Manhole — S
- Storm Sewer — S

UTILITIES:

POWER:

- Existing Power Pole
- Proposed Power Pole
- Existing Joint Use Pole
- Proposed Joint Use Pole
- Power Manhole — P
- Power Line Tower
- Power Transformer
- U/G Power Cable Hand Hole
- H-Frame Pole
- Recorded U/G Power Line — P
- Designated U/G Power Line (S.U.E.*) — P

TELEPHONE:

- Existing Telephone Pole
- Proposed Telephone Pole
- Telephone Manhole — T
- Telephone Booth
- Telephone Pedestal — T
- Telephone Cell Tower
- U/G Telephone Cable Hand Hole
- Recorded U/G Telephone Cable — T
- Designated U/G Telephone Cable (S.U.E.*) — T
- Recorded U/G Telephone Conduit — TC
- Designated U/G Telephone Conduit (S.U.E.*) — TC
- Recorded U/G Fiber Optics Cable — T FO
- Designated U/G Fiber Optics Cable (S.U.E.*) — T FO

WATER:

- Water Manhole — W
- Water Meter
- Water Valve
- Water Hydrant
- Recorded U/G Water Line — W
- Designated U/G Water Line (S.U.E.*) — W
- Above Ground Water Line — A/G Water

TV:

- TV Satellite Dish
- TV Pedestal — C
- TV Tower
- U/G TV Cable Hand Hole — HH
- Recorded U/G TV Cable — TV
- Designated U/G TV Cable (S.U.E.*) — TV
- Recorded U/G Fiber Optic Cable — TV FO
- Designated U/G Fiber Optic Cable (S.U.E.*) — TV FO

GAS:

- Gas Valve
- Gas Meter
- Recorded U/G Gas Line — G
- Designated U/G Gas Line (S.U.E.*) — G
- Above Ground Gas Line — A/G Gas

SANITARY SEWER:

- Sanitary Sewer Manhole
- Sanitary Sewer Cleanout
- U/G Sanitary Sewer Line — SS
- Above Ground Sanitary Sewer — A/G Sanitary Sewer
- Recorded SS Forced Main Line — FSS
- Designated SS Forced Main Line (S.U.E.*) — FSS

MISCELLANEOUS:

- Utility Pole
- Utility Pole with Base
- Utility Located Object
- Utility Traffic Signal Box — S
- Utility Unknown U/G Line — ?UTL
- U/G Tank; Water, Gas, Oil
- Underground Storage Tank, Approx. Loc. — UST
- A/G Tank; Water, Gas, Oil
- Geoenvironmental Boring
- U/G Test Hole (S.U.E.*)
- Abandoned According to Utility Records — AATUR
- End of Information — E.O.I.

r:\roadway\proj\BD5110K_rdy_psh01Bdgn

8/6/2012

PROJECT REFERENCE NO.	SHEET

GEOTECHNICAL ENGINEER — NORTH CAROLINA PROFESSIONAL SEAL 18840 ENGINEER JON R. SKITTA — SIGNATURE — DATE 6/18/12

ENGINEER — SIGNATURE — DATE

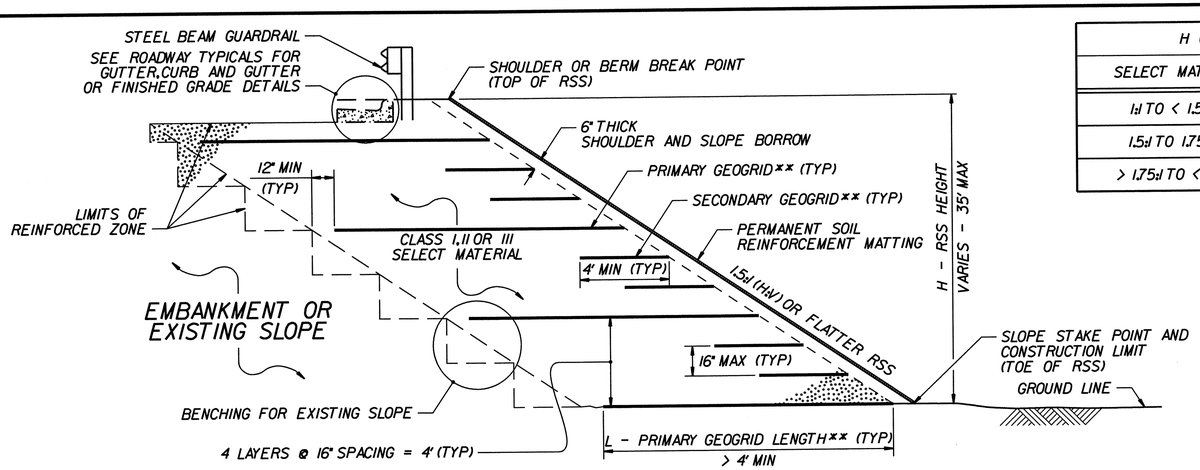

STANDARD RSS WITH SELECT MATERIAL THAT DOES NOT MEET ARTICLE 1019-2 OF THE STANDARD SPECIFICATIONS

**SEE TABLES AND GEOGRID PLACEMENT DETAILS.

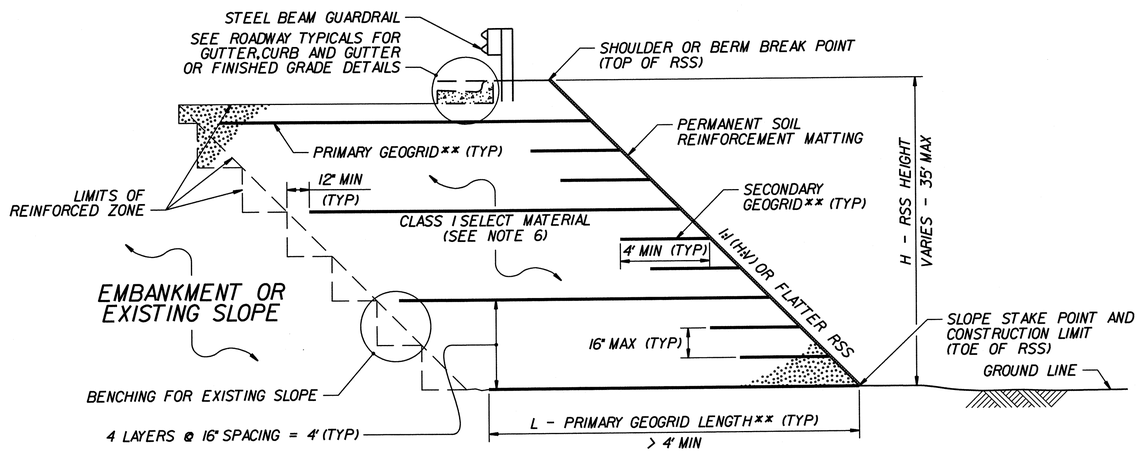

STANDARD RSS WITH SELECT MATERIAL THAT MEETS ARTICLE 1019-2 OF THE STANDARD SPECIFICATIONS

**SEE TABLES AND GEOGRID PLACEMENT DETAILS.

H (FT)	0 - < 10		10 - 20		> 20 - 35	
SELECT MATERIAL CLASS	I	II OR III	I	II OR III	I	II OR III
1:1 TO < 1.5:1 (H:V) RSS	1.20	SEE NOTE 6	1.10	SEE NOTE 6	1.00	SEE NOTE 6
1.5:1 TO 1.75:1 (H:V) RSS	1.15	1.00	1.05	0.95	0.95	0.90
> 1.75:1 TO < 2:1 (H:V) RSS	1.10	0.75	1.00	0.70	0.90	0.65

L/H RATIO (L > 4' MIN)

IF L ≤ 4', USE SECONDARY GEOGRID INSTEAD OF PRIMARY GEOGRID.

H (FT)		0 - < 10		10 - 20		> 20 - 35	
SELECT MATERIAL CLASS		I	II OR III	I	II OR III	I	II OR III
PRIMARY GEOGRID (SUBSTITUTE SECONDARY GEOGRID FOR PRIMARY GEOGRID FOR ≥ 2:1 (H:V) RSS)	1:1 TO < 1.5:1 (H:V) RSS	2XT	SEE NOTE 6	3XT	SEE NOTE 6	5XT	SEE NOTE 6
		SG150		SG200		SG350	
		SF20		SF35		SF55	
		UX1100HS		UX1400HS		UX1500HS	
	1.5:1 TO 1.75:1 (H:V) RSS	2XT	2XT	3XT	2XT	3XT	2XT
		SG150	SG150	SG200	SG150	SG200	SG150
		SF20	SF20	SF35	SF20	SF35	SF20
		UX1100HS	UX1100HS	UX1400HS	UX1100HS	UX1400HS	UX1100HS
	> 1.75:1 TO < 2:1 (H:V) RSS	2XT	2XT	2XT	2XT	2XT	2XT
		SG150	SG150	SG150	SG150	SG150	SG150
		SF20	SF20	SF20	SF20	SF20	SF20
		UX1100HS	UX1100HS	UX1100HS	UX1100HS	UX1100HS	UX1100HS
SECONDARY GEOGRID	1:1 (H:V) OR FLATTER RSS	2XT					
		SG150					
		SF11					
		BX1100					

PRIMARY AND SECONDARY GEOGRIDS

#XT REFERS TO MIRAFI SERIES GEOGRID.
SG### REFERS TO STRATAGRID SERIES GEOGRID.
SF## REFERS TO SYNTEEN SERIES GEOGRID.
UX####HS AND BX#### REFER TO TENSAR SERIES GEOGRID.

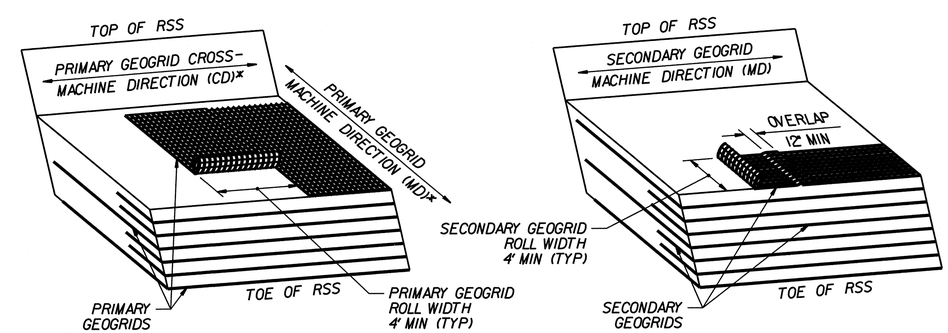

GEOGRID PLACEMENT DETAILS

*SEE NOTES 7 AND 8.

NOTES:

1. SEE ROADWAY PLANS FOR REINFORCED SOIL SLOPE (RSS) LOCATIONS.
2. FOR STANDARD REINFORCED SOIL SLOPES, SEE REINFORCED SOIL SLOPES PROVISION. FOR PERMANENT SOIL REINFORCEMENT MATTING, SEE PERMANENT SOIL REINFORCEMENT MAT PROVISION. FOR STEEL BEAM GUARDRAIL, SEE SECTION 862 OF THE STANDARD SPECIFICATIONS.
3. STANDARD RSS ARE BASED ON THE FOLLOWING IN-SITU ASSUMED SOIL PARAMETERS:
   UNIT WEIGHT, γ = 120 LB/CF
   FRICTION ANGLE, ϕ = 30 DEGREES
   COHESION, c = 0 LB/SF
4. DO NOT USE STANDARD RSS IF ASSUMED SOIL PARAMETERS ARE NOT APPLICABLE OR GROUNDWATER IS ABOVE TOE OF RSS.
5. DO NOT USE STANDARD RSS WHEN VERY LOOSE OR SOFT SOIL OR MUCK IS BELOW RSS.
6. FOR 1:1 TO < 1.5:1 (H:V) RSS, USE CLASS I SELECT MATERIAL IN THE REINFORCED ZONE THAT MEETS ARTICLE 1019-2 OF THE STANDARD SPECIFICATIONS EXCEPT FOR SELECT MATERIAL THAT MEETS AASHTO M 145 FOR SOIL CLASSIFICATIONS A-4 AND A-5. DO NOT USE A-4 OR A-5 SOIL OR CLASS II OR III SELECT MATERIAL FOR 1:1 TO < 1.5:1 (H:V) RSS.
7. EXCEPT FOR TENSAR UX GEOGRIDS, DO NOT SPLICE OR OVERLAP PRIMARY GEOGRIDS IN THE MACHINE DIRECTION (MD) SO SPLICES OR OVERLAPS ARE PARALLEL TO THE TOE OF RSS. TENSAR UX GEOGRIDS MAY BE SPLICED ONCE PER PRIMARY GEOGRID LENGTH IN ACCORDANCE WITH TENSAR'S BODKIN CONNECTION DETAIL. USE TENSAR UX GEOGRID PIECES AT LEAST 4' LONG.
8. EXCEPT FOR TENSAR UX GEOGRIDS, PLACE PRIMARY GEOGRIDS SO GEOGRIDS ARE ADJACENT TO EACH OTHER IN THE CROSS-MACHINE DIRECTION (CD). TENSAR UX GEOGRIDS MAY BE PLACED WITH A MAXIMUM SPACING BETWEEN GEOGRIDS OF 1.64' IN THE CD. STAGGER TENSAR UX GEOGRIDS SO GEOGRIDS ARE CENTERED OVER GAPS IN THE PRIMARY GEOGRID LAYER BELOW.
9. DO NOT PLACE PRIMARY GEOGRIDS UNTIL EXCAVATION DIMENSIONS AND IN-SITU MATERIAL ARE APPROVED.

STATE OF NORTH CAROLINA DEPARTMENT OF TRANSPORTATION

GEOTECHNICAL ENGINEERING UNIT

STATE OF NORTH CAROLINA DEPARTMENT OF TRANSPORTATION RALEIGH

STANDARD DRAWING NO. 1803.01

STANDARD REINFORCED SOIL SLOPE (RSS)

DATE: 1-17-12

PROJECT REFERENCE NO.	SHEET NO.
BD-5110K	3
RW SHEET NO.	

PAVEMENT DESIGN ENGINEER	ROADWAY DESIGN ENGINEER	HYDRAULICS ENGINEER
PAVEMENT DESIGN PROVIDED BY NCDOT	NORTH CAROLINA PROFESSIONAL ENGINEER SEAL 039234 NIKKI T. HONEYCUTT 7 AUG 12	NORTH CAROLINA PROFESSIONAL ENGINEER SEAL 038054 DAVIN C. MORRISON 8/7/12

STV / Ralph Whitehead Associates, Inc.
1000 West Morehead St., Ste. 200
Charlotte, NC 28208
NC License Number F-0991

DIVISION OF HIGHWAYS
STATE OF NORTH CAROLINA

EARTHWORK SUMMARY (IN CUBIC YARDS)

CHAIN	FROM STATION	TO STATION	SIDE	UNCL. EXCAVATION	UNDERCUT	EMBT+%	BORROW	WASTE
-L-	10+20.00	12+16.75	LT & RT	2		210	250	
SUBTOTAL SUMMARY NO. 1				2		210	250	
-L-	13+34.25	15+40.00	LT & RT	9		277	323	
SUBTOTAL SUMMARY NO. 2				9		277	323	
SUBTOTAL SUMMARY 1-2				11		487	573	
LOSS DUE TO CLEARING AND GRUBBING				-168			168	
PROJECT TOTAL				0		487	741	
WASTE IN LIEU OF BORROW								
ESTIMATE 5% FOR TOPSOIL ON BORROW PITS							37	
GRAND TOTAL				0		487	778	
SAY				0			780	

NOTE: Earthwork quantities are calculated by the Roadway Design Unit. These earthwork quantities are based in part on subsurface data provided by the Geotechnical Engineering Unit.

Approximate quantities only. Unclassified Excavation, Borrow Excavation, Fine Grading, Clearing and Grubbing, Breaking of Existing Pavement, and Removal of Existing Pavement will be paid for at the contract lump sum price for "Grading."

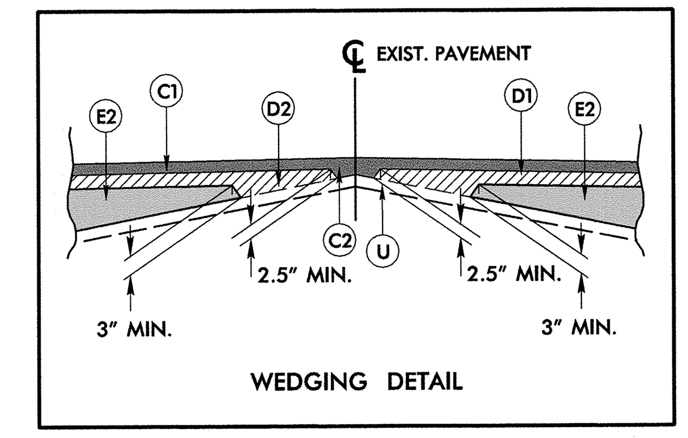

WEDGING DETAIL

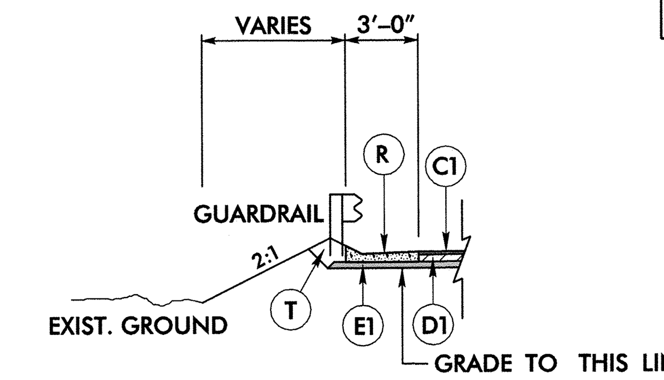

DETAIL A
-L- STA. 13+45.67 TO 13+63.81 (LT.)
-L- STA. 13+44.81 TO 13+62.48 (RT.)

	PAVEMENT SCHEDULE
C1	PROP. APPROX. 1.5" ASPHALT CONCRETE SURFACE COURSE, TYPE S9.5B, AT AN AVERAGE RATE OF 168 LBS. PER SQ. YD.
C2	PROP. VAR. DEPTH ASPHALT CONCRETE SURFACE COURSE, TYPE S9.5B, AT AN AVERAGE RATE OF 112 LBS. PER SQ. YD. PER 1" DEPTH. TO BE PLACED IN LAYERS NOT LESS THAN 1.5" IN DEPTH OR GREATER THAN 2.0" IN DEPTH.
D1	PROP. APPROX. 3.5" ASPHALT CONCRETE INTERMEDIATE COURSE, TYPE I19.0B, AT AN AVERAGE RATE OF 399 LBS. PER SQ. YD.
D2	PROP. VAR. DEPTH ASPHALT CONCRETE INTERMEDIATE COURSE, TYPE I19.0B, AT AN AVERAGE RATE OF 114 LBS. PER SQ. YD. PER 1" DEPTH. TO BE PLACED IN LAYERS NOT LESS THAN 2.5" IN DEPTH OR GREATER THAN 4" IN DEPTH.
E1	PROP. APPROX. 3" ASPHALT CONCRETE BASE COURSE, TYPE B25.0B, AT AN AVERAGE RATE OF 342 LBS. PER SQ. YD.
E2	PROP. VAR. DEPTH ASPHALT CONCRETE BASE COURSE, TYPE B25.0B, AT AN AVERAGE RATE OF 114 LBS. PER SQ. YD. PER 1" DEPTH. TO BE PLACED IN LAYERS NOT LESS THAN 3.0" IN DEPTH OR GREATER THAN 5.5" IN DEPTH.
R	CONCRETE SHOULDER BERM GUTTER
T	EARTH MATERIAL
U	EXISTING PAVEMENT

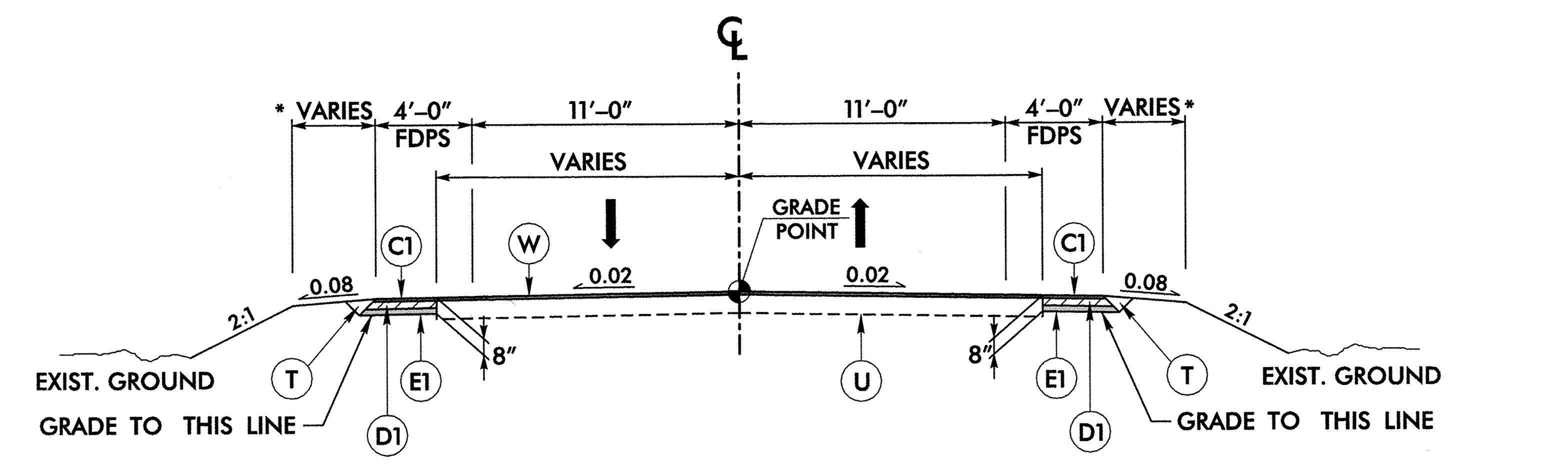

TYPICAL SECTION
-L- STA. 10+60.00 TO 12+16.75 (BEGIN BRIDGE)
-L- STA. 13+34.25 (END BRIDGE) TO 15+40.00

* ADDITIONAL 3'-0" WITH GUARDRAIL (2'-0" WITH STRONG POST GUARDRAIL)
** ALL PAVEMENT SLOPES ARE 1:1 UNLESS SHOWN OTHERWISE.
*** SEE DETAIL A FOR SHOULDER BERM GUTTER LOCATION

LIST OF PIPES, ENDWALLS, ETC. (FOR PIPES 48 INCHES & UNDER)

STATION	LOCATION (LT, RT, OR CL)	STRUCTURE NO. FROM	STRUCTURE NO. TO	TOP ELEVATION	INVERT ELEVATION	INVERT ELEVATION	SLOPE CRITICAL	R.C. PIPE CLASS III 15"	QUANTITIES FOR DRAINAGE STRUCTURES PER EACH (0' THRU 5.0')	TOTAL L.F. FOR PAY QUANTITY SHALL BE COL. "A" + (1.3 X COL. "B") LIN. FT. A: 5.0' THRU 10.0'	B: 10.0' AND ABOVE	G.D.I. (N.S.) FRAME WITH TWO GRATES STD. 840.29	TRAFFIC BEARING GRATED DROP INLET STD. 840.35	REMARKS
-L- 13+57.00	LT	1		460.62										
		IN	OUT		454.38	452.95	7.94	18	1	1.20		1	1	
-L- 13+57.00	RT	2		460.58										
		IN	OUT		453.29	451.77	8.00	20	1	2.30		1	1	
SHEET TOTALS								40	2	3.50		2	2	

Other column headings of the list (no entries): SIZE; THICKNESS OR GAUGE; SIDE DRAIN PIPE (RCP, CSP, CAAP, HDPE, or PVC) 12" 15" 18" 24" 30" 36" 42" 48"; DO NOT USE RCP; DO NOT USE CSP; DO NOT USE CAAP; DO NOT USE HDPE; C.S. PIPE 12" 15" 18" 24" 30" 36" 42" 48" (.064 .064 .064 .064 .079 .079 .109 .109); R.C. PIPE CLASS III 12" 18" 24" 30" 36" 42" 48"; R.C. PIPE CLASS IV 12" 15" 18" 24" 30" 36" 42" 48"; ** "R.C. PIPE (CLASS V)"; ***" RC PIPE CULVERTS, CONTRACTOR DESIGN; ***" RC PIPE CULVERTS, CONTRACTOR DESIGN; 15" SIDE DRAIN PIPE; 18" SIDE DRAIN PIPE; ENDWALLS STD. 838.01 OR STD. 838.11 (UNLESS NOTED OTHERWISE) CU. YARDS R.C.P. C.S.P.; C.B. STD. 840.01 OR STD. 840.02; FRAME, GRATES, AND HOOD STANDARD 840.03 TYPE OF GRATE E F G; CONCRETE TRANSITIONAL SECTION; DROP INLET; CATCH BASIN; D.I. STD. 840.14 OR STD. 840.15; D.I. FRAME AND GRATE STD. 840.16; G.D.I. TYPE "A" STD. 840.17 OR 840.26; G.D.I. TYPE "B" STD. 840.18 OR 840.27; G.D.I. TYPE "D" STD. 840.19 OR 840.28; TRAFFIC BEARING G.D.I. STD. 840.35; G.D.I. FRAME WITH GRATE STD. 840.20; G.D.I. FRAME WITH TWO GRATES STD. 840.22; G.D.I. (N.S.) FRAME WITH GRATE STD. 840.24; J.B. STD. 840.31 OR 840.32; SIDE DRAIN PIPE ELBOWS NO. & SIZE; CONC. & BRICK PIPE PLUG, CY. STD. 840.71; CONC. COLLARS CL. "B" C.Y. STD. 840.72; PIPE REMOVAL LIN. FT.

ABBREVIATIONS

C.B.	CATCH BASIN
N.D.I.	NARROW DROP INLET
D.I.	DROP INLET
G.D.I.	GRATED DROP INLET
G.D.I.(N.S.)	(NARROW SLOT)
J.B.	JUNCTION BOX
M.H.	MANHOLE
T.B.D.I.	TRAFFIC BEARING DROP INLET
T.B.J.B.	TRAFFIC BEARING JUNCTION BOX

* W MEASURED FROM "N" AT THE BEGINNING OF THE ANCHOR TO "N" AT THE END OF THE ANCHOR.
"N" = DISTANCE FROM EDGE OF LANE TO FACE OF GUARDRAIL.
TOTAL SHOULDER WIDTH = DISTANCE FROM EDGE OF TRAVEL LANE TO SHOULDER BREAK POINT.
FLARE LENGTH = DISTANCE FROM LAST SECTION OF PARALLEL GUARDRAIL TO END OF GUARDRAIL.
W = TOTAL WIDTH OF FLARE FROM BEGINNING OF TAPER TO END OF GUARDRAIL.
G = GATING IMPACT ATTENUATOR TYPE 350
NG = NON-GATING IMPACT ATTENUATOR TYPE 350

GUARDRAIL SUMMARY

SURVEY LINE	BEG. STA.	END STA.	LOCATION	LENGTH STRAIGHT	LENGTH SHOP CURVED	LENGTH DOUBLE FACED	WARRANT POINT APPROACH END	WARRANT POINT TRAILING END	"N" DIST. FROM E.O.L.	TOTAL SHOUL. WIDTH	FLARE LENGTH APPROACH END	FLARE LENGTH TRAILING END	W* APPROACH END	W* TRAILING END	ANCHORS XI MOD	ANCHORS B-77	ANCHORS GRAU 350	ANCHORS M-350	ANCHORS TYPE III	ANCHORS CAT-1	ANCHORS VI MOD	ANCHORS BIC	ANCHORS AT-1	IMPACT ATTENUATOR TYPE 350 EA	G	NG	SINGLE FACED GUARDRAIL	REMOVE EXISTING GUARDRAIL	REMOVE AND STOCKPILE EXISTING GUARDRAIL	REMARKS
-L-	11+35.83	12+17.07	RT	81.25			12+17.07		5.13-6.45	8.13-8.45	62.50'		1.32'				1		1											STRONG POST GUARDRAIL
-L-	11+35.21	12+16.45	LT	81.25				12+16.45	3.64-4.86	6.64-6.86		62.50'		1.22'			1		1											
-L-	13+33.83	14+14.11	RT	81.25				13+33.83	5.47-6.70	8.47-8.70		62.50'		1.23'			1		1											
-L-	13+34.68	14+16.79	LT	81.25			13+34.68		3.40-4.59	6.40-6.59	62.50'		1.19'				1		1											
			TOTAL:	325.0													4		4											
			TOTAL ANCHOR LENGTH:	275.0																										
			TOTAL GUARDRAIL LENGTH:	50.0																										
			SAY:	50.0																										

R:\Roadway\Proj\BD5110K_rdy_psh03.dgn

8/7/2012

PROJECT REFERENCE NO.	SHEET NO.
BD-5110K	4
R/W SHEET NO.	

ROADWAY DESIGN ENGINEER — NORTH CAROLINA PROFESSIONAL SEAL 039234 ENGINEER MICHAEL T. HONEYCUTT 7/26/12

HYDRAULICS ENGINEER — NORTH CAROLINA PROFESSIONAL SEAL 038082 ENGINEER MARTIN C. MORRISON 8/7/12

STV / Ralph Whitehead Associates, Inc.
1000 West Morehead St., Ste. 200
Charlotte, NC 28208
NC License Number F-0991

DATUM DESCRIPTION

THE LOCALIZED COORDINATE SYSTEM DEVELOPED FOR THIS PROJECT IS BASED ON THE STATE PLANE COORDINATES ESTABLISHED BY NCGS FOR MONUMENT "BY8-3"
WITH NAD 83 STATE PLANE GRID COORDINATES OF
NORTHING: 457735.023(ft) EASTING: 1557998.488(ft)
ELEVATION: 460.57(ft)
THE AVERAGE COMBINED GRID FACTOR USED ON THIS PROJECT (GROUND TO GRID) IS: 0.999857667
THE N.C. LAMBERT GRID BEARING AND LOCALIZED HORIZONTAL GROUND DISTANCE FROM "BY8-3" TO -L- POT STATION 10+60.00 IS
S 69° 13' 53.381"W 166.519 (ft)
ALL LINEAR DIMENSIONS ARE LOCALIZED HORIZONTAL DISTANCES
VERTICAL DATUM USED IS NAVD 88

BL-64	N 457940.095	E 1558454.472	ELEV 458.88
BY8-3	N 457735.023	E 1557998.488	ELEV 460.57
BY8-4	N 457629.039	E 1557752.039	ELEV 473.77

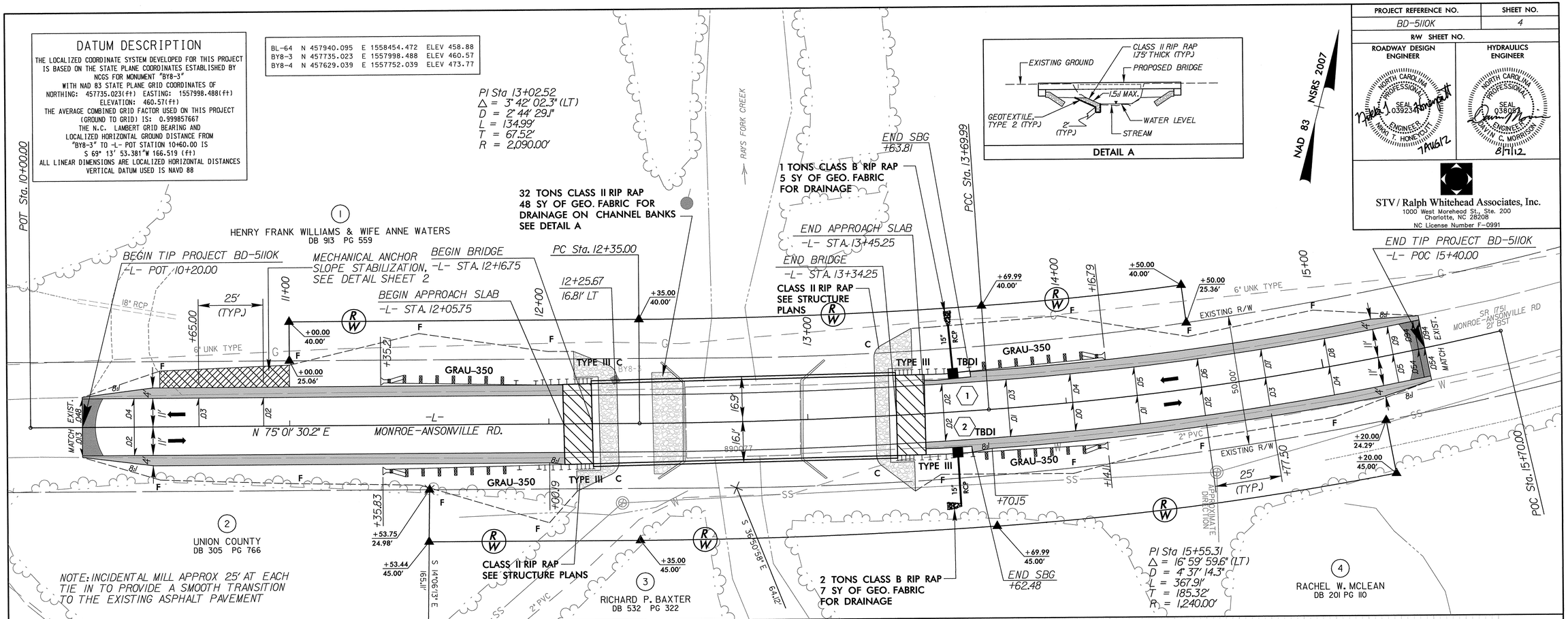

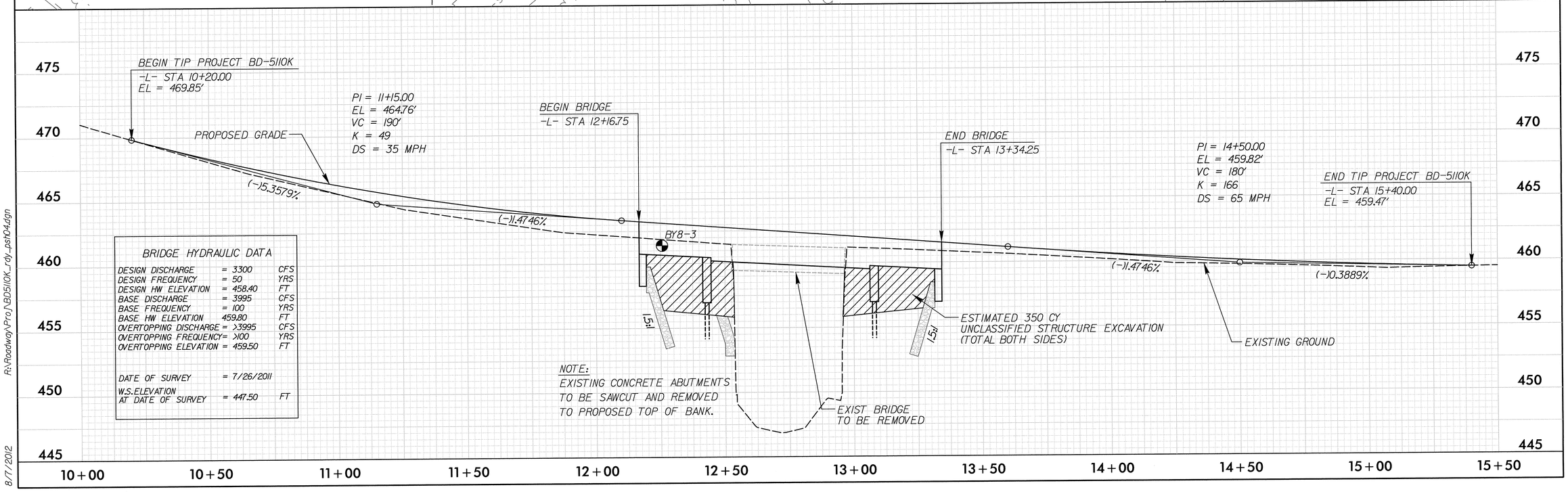

BRIDGE HYDRAULIC DATA

DESIGN DISCHARGE	= 3300	CFS
DESIGN FREQUENCY	= 50	YRS
DESIGN HW ELEVATION	= 458.40	FT
BASE DISCHARGE	= 3995	CFS
BASE FREQUENCY	= 100	YRS
BASE HW ELEVATION	459.80	FT
OVERTOPPING DISCHARGE	= >3995	CFS
OVERTOPPING FREQUENCY	= >100	YRS
OVERTOPPING ELEVATION	= 459.50	FT
DATE OF SURVEY	= 7/26/2011	
W.S.ELEVATION AT DATE OF SURVEY	= 447.50	FT

R:\Roadway\Proj\BD5110K_rdy_psh04.dgn

8/7/2012

PROJECT REFERENCE NO.	SHEET NO.
BD-5110K	TCP-1
R/W SHEET NO.	

STV / Ralph Whitehead Associates, Inc.
1000 West Morehead St., Ste. 200
Charlotte, NC 28208
NC License Number F-0991

ROADWAY DESIGN ENGINEER

NORTH CAROLINA PROFESSIONAL SEAL 039234 ENGINEER NIKKI T. HONEYCUTT
7 AUG 12

DETOUR ROUTE

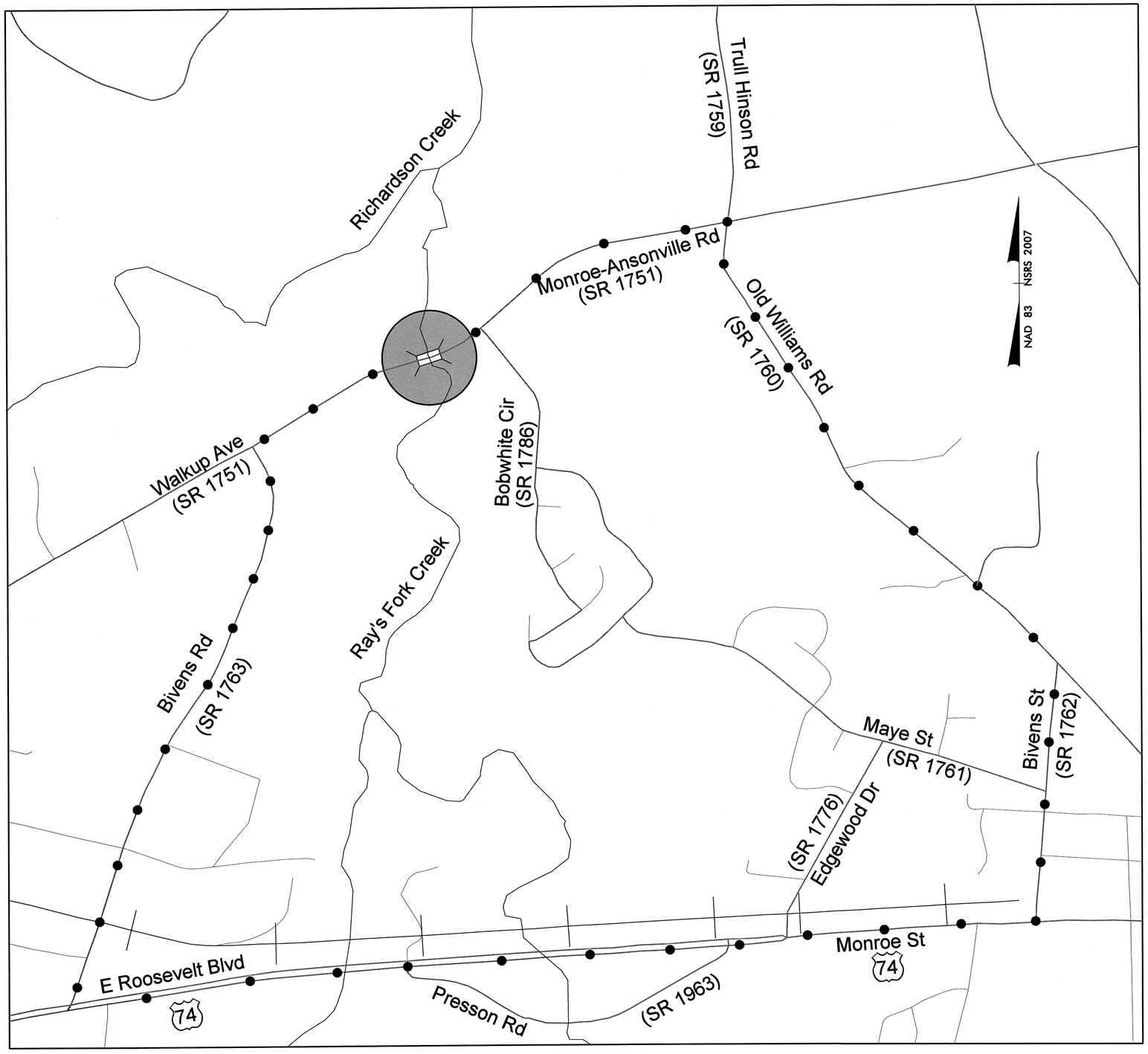

Scale Approximately 1" = 600'

r:\traffic\traffiocontrol\tcp\BD5110K_rdy_tcp01.dgn

8/6/2012

PROJECT REFERENCE NO.	SHEET NO.
BD-5110K	TCP-2
R/W SHEET NO.	

TEMPORARY ROAD CLOSURE

CLOSURE BEYOND DETOUR POINT

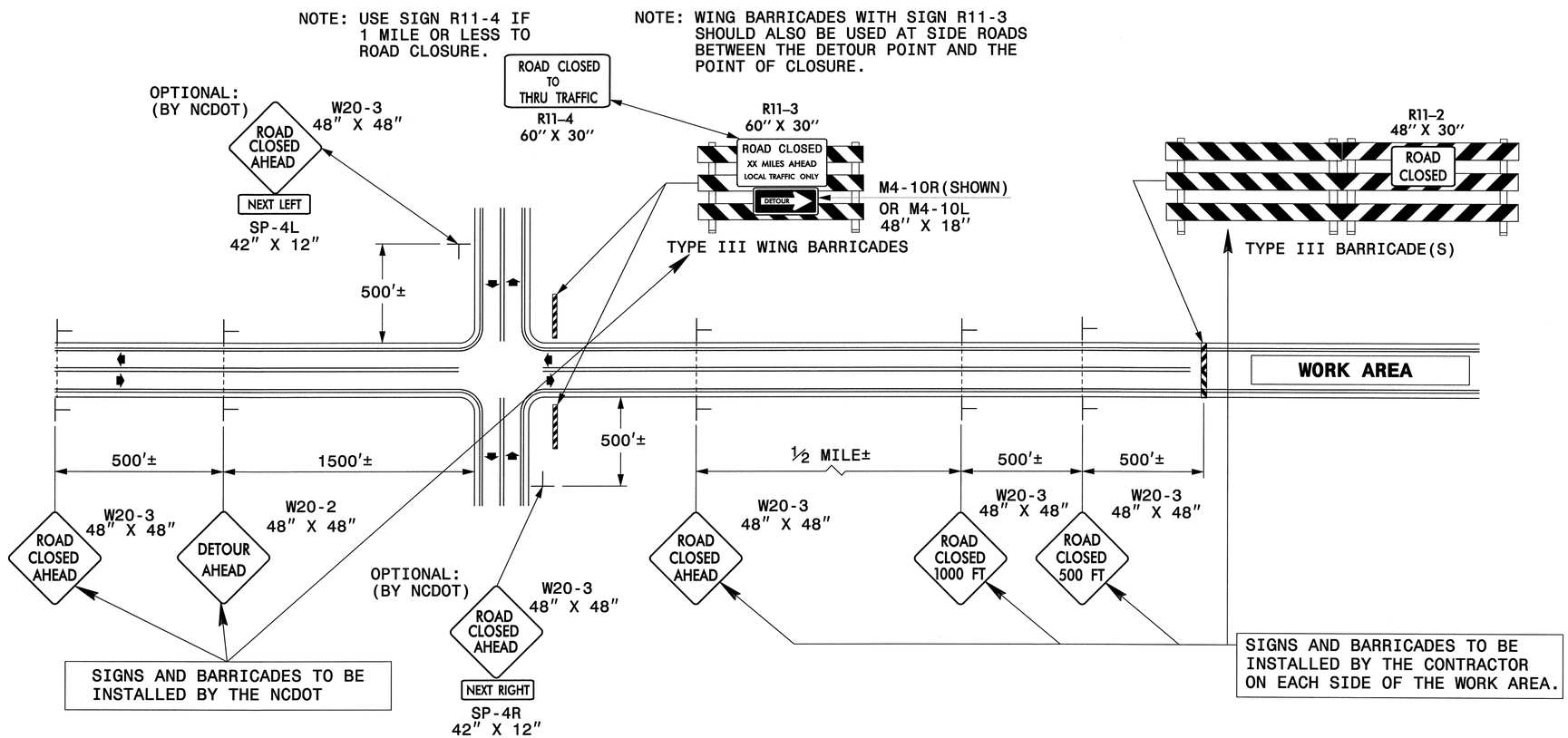

GENERAL NOTES

1-IF NECESSARY USE THIS STD. FOR TWO-LANE, TWO-WAY, AND MULTILANE DIVIDED AND UNDIVIDED ROADWAYS.

2-INSTALLATION OF DETOUR ROUTING PANELS, TEMPORARY ROUTE MARKERS, DESTINATION SIGNS, AND ANY NECESSARY MODIFICATIONS TO EXISTING OR PROPOSED REGULATORY OR WARNING SIGNS WILL BE MADE BY NCDOT FORCES UNLESS OTHERWISE DESIGNATED IN THE PLANS. PROVIDE A MINIMUM 21 CALENDAR DAY NOTICE TO STATE FORCES BEFORE A ROADWAY IS CLOSED TO TRAFFIC SUCH THAT THE NECESSARY PROVISIONS CAN BE MADE TO INSTALL DETOUR ROUTE SIGNS, INFORM LOCAL EMERGENCY AND LAW ENFORCEMENT PERSONNEL, SCHOOLS, OR ANY OTHER PARTIES AFFECTED BY THE ROAD CLOSURE.

3-INSTALL SIGNS BEFORE THE BARRICADES WHEN CLOSING THE ROADWAY TO TRAFFIC. REMOVE BARRICADES BEFORE SIGNS WHEN OPENING THE ROADWAY TO TRAFFIC. INSTALL/REMOVE SIGNS AND BARRICADES WITHIN THE SAME CALENDAR DAY.

4-USE ADDITIONAL TYPE III BARRICADES IN STAGGERED LOCATIONS SUPPLEMENTED WITH SIGN R11-4 "ROAD CLOSED TO THRU TRAFFIC" IN THE EVENT THAT TRAFFIC MUST BE MAINTAINED BEYOND THE DETOUR POINT.

5-DO NOT DISPLAY FRACTIONS OR DECIMALS ON SIGN R11-3 "ROAD CLOSED XX MILES AHEAD".

6-POSITION WING BARRICADES ON THE SHOULDERS AND SLOPE THE STRIPES DOWNWARD IN THE DIRECTION TOWARD WHICH TRAFFIC MUST TURN IN DETOURING.

7-USE PORTABLE SIGNS IF ROAD CLOSURE IS TO BE IMPLEMENTED FOR LESS THAN ONE DAY OR FOR EMERGENCIES.

LEGEND

- ├ STATIONARY SIGN
- ⬅ DIRECTION OF TRAFFIC FLOW

r:\traffic\traffiecontrol\tcp\BD5110K_rdy_tcp02.dgn
8/6/2012

TIP PROJECT: BD-5110K

T.I.P. NO.	SHEET NO.
BD-5110K	UC-1

STATE OF NORTH CAROLINA
DIVISION OF HIGHWAYS

UNION COUNTY

LOCATION: BRIDGE #077 OVER RAY'S CREEK ON SR 1751 (MONROE-ANSONVILLE ROAD)

TYPE OF WORK: WATER CONSTRUCTION

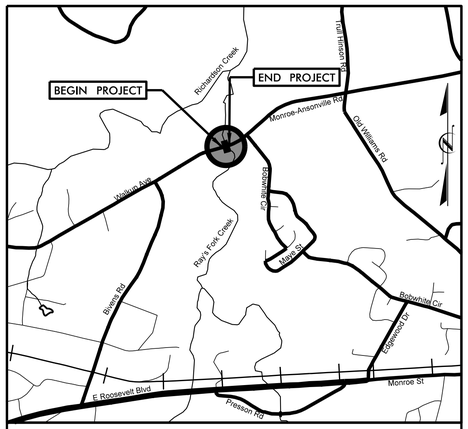

VICINITY MAP N.T.S.

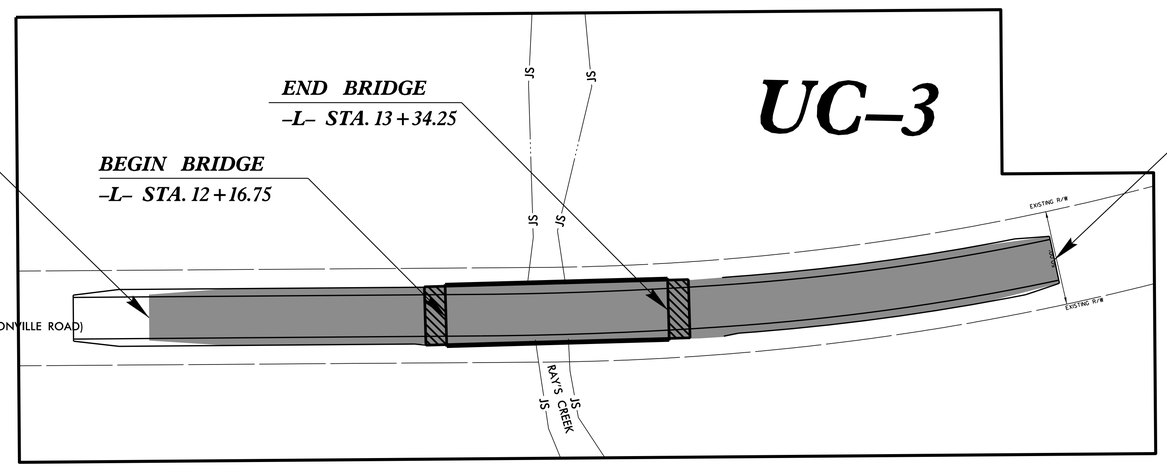

INDEX OF SHEETS

SHEET NO.	DESCRIPTION
UC-1	TITLE SHEET
UC-2	SYMBOLOGY SHEET
UC-3	UTILITY PLAN AND PROFILE SHEET

WATER AND SEWER OWNERS ON PROJECT

(1) WATER AND SEWER - UNION COUNTY PUBLIC WORKS

SEAL

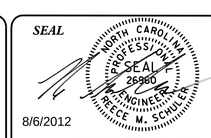

8/6/2012

Vaughn & Melton
Consulting Engineers
3089-L Beam Road
Charlotte, NC 28217
704 357 0488

PREPARED IN THE OFFICE OF:
DIVISION OF HIGHWAYS
UTILITIES ENGINEERING SECTION
1591 MAIL SERVICES CENTER
RALEIGH NC 27699-1591
PHONE (919) 250-4128
FAX (919) 250-4119

Roger Worthington, P.E.	UTILITIES SECTION ENGINEER
Xxxxx Xxxxx, P.E.	UTILITIES SQUAD LEADER PROJECT ENGINEER
Reece Schuler, PE	UTILITIES PROJECT DESIGNER

09/08/99
$$$$SYSTIME$$$$DGN$$$$
$$$$USERNAME$$$$

Note: Not to Scale

**S.U.E. = Subsurface Utility Engineering*

STATE OF NORTH CAROLINA
DIVISION OF HIGHWAYS

UTILITIES PLAN SHEET SYMBOLS

Vaughn & Melton
Consulting Engineers
Charlotte, North Carolina 704-357-0488
Asheville, North Carolina 828-253-2796
Tri-Cities, Tennessee 423-467-8401
Knoxville, Tennessee 865-546-5800
Middlesboro, Kentucky 606-248-6600
Spartanburg, South Carolina 864-574-4775

Copyright © 2006 Vaughn & Melton, Inc. All Rights Reserved

PROJECT REFERENCE NO.	SHEET NO.
BD-5110K	UC-2
DESIGNED BY: RMS	
DRAWN BY: WSN	
CHECKED BY: RMS	
APPROVED BY:	
REVISED:	
NORTH CAROLINA DEPARTMENT OF TRANSPORTATION	
UTILITIES ENGINEERING SEC. PHONE:(919)250-4128 FAX:(919)250-4119	8/6/2012 UTILITY CONSTRUCTION PLANS ONLY

NORTH CAROLINA PROFESSIONAL SEAL 26960 ENGINEER REECE M. SCHULER

UTILITY CONSTRUCTION

Water

- Proposed Back Flow Preventor — PBFP
- Relocate Back Flow Preventor — RBFP
- Existing Water Valve — WV
- Proposed Valve — GV
- Proposed Tapping Valve — TGV
- Existing Water Meter — WM
- Proposed Water Meter — PWM
- Proposed Water Meter / Vault — PWM
- Relocate Water Meter — RWM
- Remove Water Meter — REM WM

- Existing Hydrant — H
- Prop Hydrant — PFH
- Relocate Hydrant — RFH
- Remove Hydrant — REM FH

- Proposed RPZ Back Flow Preventor — PRPZ
- Relocate RPZ Back Flow Preventor — RRPZ
- 45° Bend w/Thrust Block
- Water Plug
- Water Cross
- Water Plug
- Water Reducer
- Water Tee
- Water Pump Station — PS(W)
- Water Thrust Block
- Blow Off Valve — BO
- Air Release Valve — AR
- Water Line Stop — LS
- Water Line Stop w Bypass — LS/BP

Utility By Other Symbols

- Proposed Tel Pole
- Proposed Power Pole
- Proposed Joint Use Power, Tel Pole
- Proposed Joint Use Power, CATV Pole
- Proposed Joint Use Power, Tel, CATV Pole
- Proposed Joint Use Tel, CATV Pole

Sewer

- Existing Manhole — MH
- Proposed UT Manhole
- Remove UT Manhole — REM UT MH
- Abandon Utility Manhole — ABAND MH
- Sewer Line Stop — LS
- Sewer Line Stop w Bypass — LS/BP
- U/G Sanitary Sewer Line — SS

- Sewer Cross
- Sewer Plug
- Sewer Reducer
- Sewer Tee
- Sewer Pump Station — PS(SS)
- Sewer Thrust Block

- PUE Monument
- Concrete Pier — CP
- Steel Pile Pier — SP
- Test Hole (SUE)
- Prop Utility Vault — UV

5/14/99
$$$$SYSTIME$$$$DGN$$$$FILENAME$$$$
...\UTILITIES\bd5110K_utl_UC02.dgn 4/19/2012 1:47:10 PM

PROJECT REFERENCE NO.	SHEET NO.
BD-5110K	UC-3
DESIGNED BY: RMS	
DRAWN BY: WSN	
CHECKED BY: RMS	
APPROVED BY:	
REVISED:	
NORTH CAROLINA DEPARTMENT OF TRANSPORTATION	
UTILITIES ENGINEERING SEC. PHONE:(919)250-4128 FAX:(919)250-4119	UTILITY CONSTRUCTION PLANS ONLY

NORTH CAROLINA PROFESSIONAL SEAL 26960 ENGINEER REECE W. SCHILLER
8/6/2012

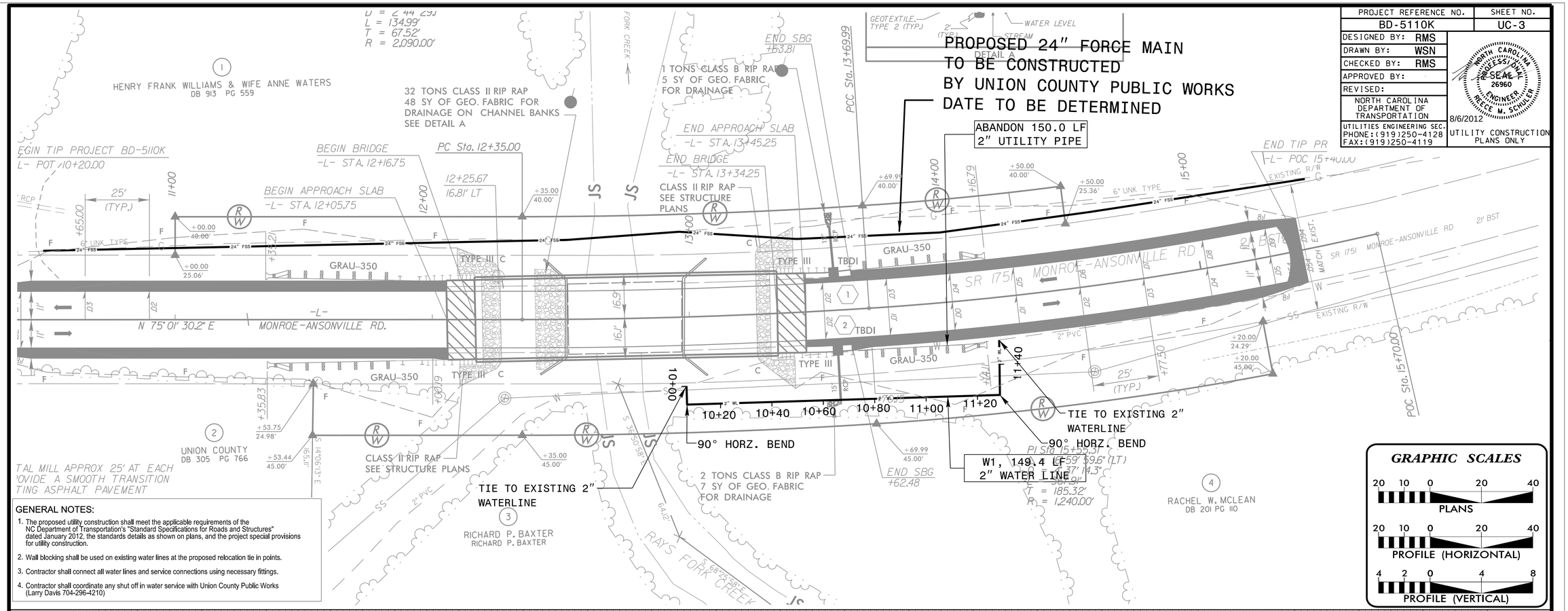

GENERAL NOTES:

1. The proposed utility construction shall meet the applicable requirements of the NC Department of Transportation's "Standard Specifications for Roads and Structures" dated January 2012, the standards details as shown on plans, and the project special provisions for utility construction.
2. Wall blocking shall be used on existing water lines at the proposed relocation tie in points.
3. Contractor shall connect all water lines and service connections using necessary fittings.
4. Contractor shall coordinate any shut off in water service with Union County Public Works (Larry Davis 704-296-4210)

GRAPHIC SCALES

PLANS: 20 10 0 20 40

PROFILE (HORIZONTAL): 20 10 0 20 40

PROFILE (VERTICAL): 4 2 0 4 8

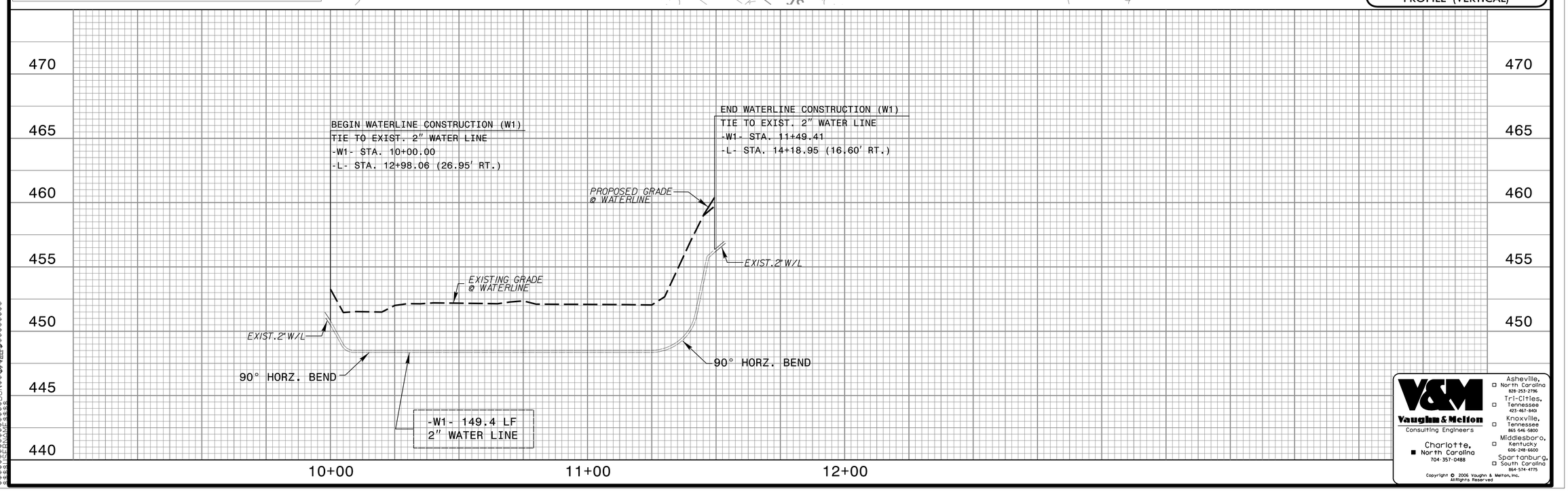

Vaughn & Melton
Consulting Engineers
Charlotte, North Carolina 704-357-0488
Asheville, North Carolina 828-253-2796
Tri-Cities, Tennessee 423-467-840
Knoxville, Tennessee 865-546-5800
Middlesboro, Kentucky 606-248-6600
Spartanburg, South Carolina 864-574-4775

Copyright © 2006 Vaughn & Melton, Inc.
All Rights Reserved

Note: Not to Scale

**S.U.E. = Subsurface Utility Engineering*

STATE OF NORTH CAROLINA
DIVISION OF HIGHWAYS

UTILITIES PLAN SHEET DETAILS

V&M
Vaughn & Melton
Consulting Engineers
Charlotte, North Carolina 704-357-0488
Asheville, North Carolina 828-253-2796
Tri-Cities, Tennessee 423-467-8401
Knoxville, Tennessee 865-546-5800
Middlesboro, Kentucky 606-248-6600
Spartanburg, South Carolina 864-574-4775

Copyright © 2006 Vaughn & Melton, Inc. All Rights Reserved

PROJECT REFERENCE NO.	SHEET NO.
BD-5110K	UC-4
DESIGNED BY: RMS	
DRAWN BY: CBC	
CHECKED BY: RMS	
APPROVED BY:	
REVISED:	
NORTH CAROLINA DEPARTMENT OF TRANSPORTATION	
UTILITIES ENGINEERING SEC. PHONE:(919)250-4128 FAX:(919)250-4119	UTILITY CONSTRUCTION PLANS ONLY

NORTH CAROLINA PROFESSIONAL ENGINEER SEAL 26950 REECE M. SCHULER
8/6/2012

UTILITY CONSTRUCTION

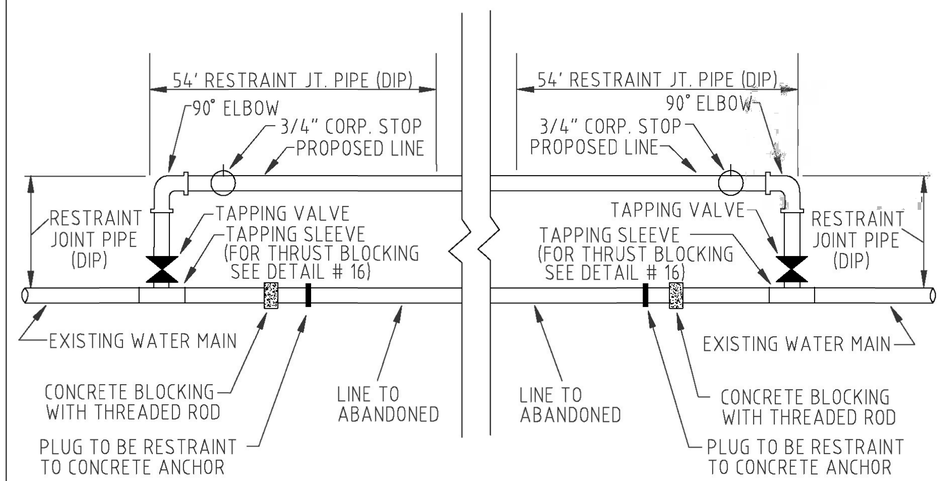

NOTE: ALL WATERMAINS ALONG EXISTING DOT ROADS MUST BE A MINIMUM DISTANCE OF A 1/1 RATIO OFF EDGE OF PAVEMENT OR BACK OF CURB.

UNION COUNTY PUBLIC WORKS DEPARTMENT UNION COUNTY, N.C.	STANDARD DETAIL WATERMAIN RELOCATION FOR SMALL WATERMAINS	SCALE: N.T.S. DATE: 3-8-11	27B

TIP PROJECT: BD–5110K

See Sheet 1-A For Index of Sheets
See Sheet 1-B For Standard Symbology Sheet

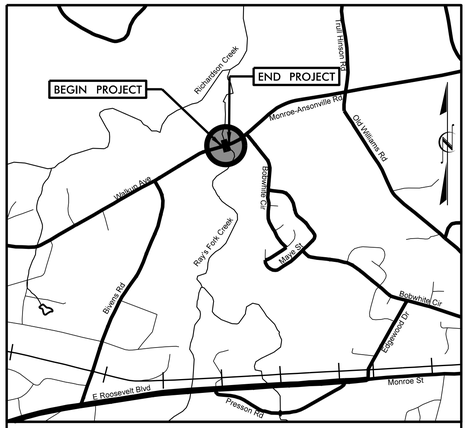

VICINITY MAP N.T.S.

STATE OF NORTH CAROLINA
DIVISION OF HIGHWAYS

UNION COUNTY

T.I.P. NO.	SHEET NO.
BD–5110K	UO–1

LOCATION: BRIDGE #077 OVER RAY'S CREEK ON SR 1751 (MONROE–ANSONVILLE ROAD)

TYPE OF WORK: GRADING, PAVING, DRAINAGE & STRUCTURE

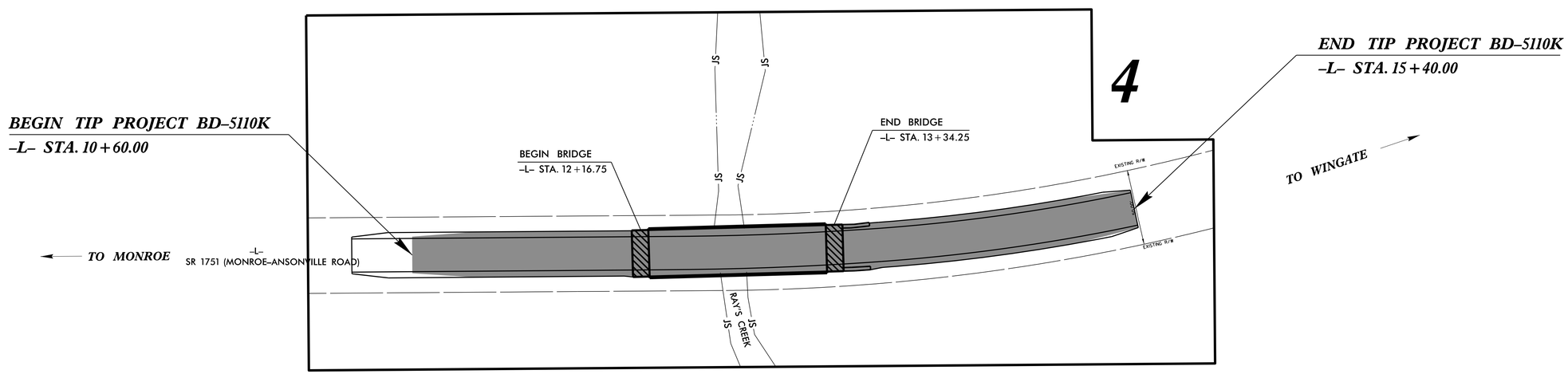

CONTRACT:

PRELIMINARY PLANS
$DATE$

GRAPHIC SCALES

20 10 0 20 40
PLANS

INDEX OF SHEETS

SHEET NO.	DESCRIPTION
UO–1	TITLE SHEET
UO–2	UTILITY BY OTHERS PLAN SHEETS

UTILITY OWNERS ON PROJECT

(1) SEWER FORCE MAIN – UNION COUNTY PUBLIC WORKS

SEAL
NORTH CAROLINA PROFESSIONAL SEAL 26960 ENGINEER REECE M. SCHULER
8/6/2012

Vaughn & Melton
Consulting Engineers
3089-L Beam Road
Charlotte, NC 28217
704-357-0488

STATE OF NORTH CAROLINA DEPARTMENT OF TRANSPORTATION

PREPARED IN THE OFFICE OF:
DIVISION OF HIGHWAYS
UTILITIES ENGINEERING SECTION
1591 MAIL SERVICES CENTER
RALEIGH NC 27699–1591
PHONE (919) 250–4128
FAX (919) 250–4119

Roger Worthington, P.E. — UTILITIES SECTION ENGINEER
Xxxxx Xxxxx, P.E. — UTILITIES SQUAD LEADER PROJECT ENGINEER
Reece Schuler, PE — UTILITIES PROJECT DESIGNER

PROJECT REFERENCE NO.	SHEET NO.
BD-5110K	U0-2

UTILITIES BY OTHERS

NOTE:
ALL PROPOSED UTILITY WORK SHOWN ON THIS SHEET WILL BE DONE BY OTHERS

Vaughn & Melton
Consulting Engineers
Asheville, North Carolina 828-253-2796
Tri-Cities, Tennessee 423-467-8401
Knoxville, Tennessee 865-546-5800
Middlesboro, Kentucky 606-248-6600
Spartanburg, South Carolina 864-574-4775
Charlotte, North Carolina 704-357-0488

Copyright © 2006 Vaughn & Melton, Inc. All Rights Reserved

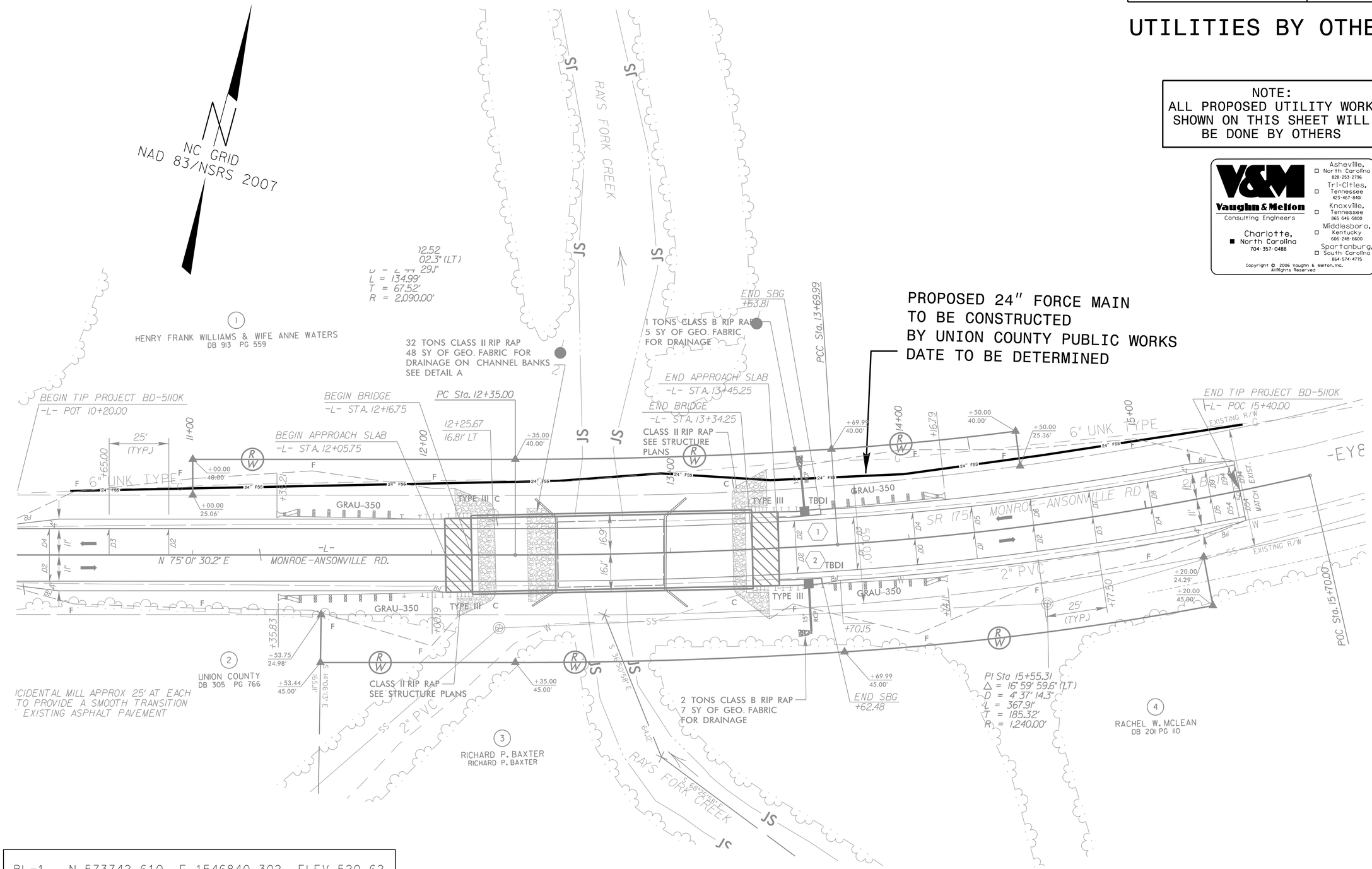

BL-1	N 573742.610	E 1546840.302	ELEV 520.62
BL-2	N 573814.003	E 1546471.834	ELEV 508.05
BL-3	N 573960.023	E 1546045.758	ELEV 520.70

TIP PROJECT: BD-5110K

STATE	STATE PROJECT REFERENCE NO.	SHEET NO.	TOTAL SHEETS
N.C.	BD-5110K	EC-1	EC-4

STATE PROJ. NO.	F. A. PROJ. NO.	DESCRIPTION
45356.1.11	BRSTP-1751(3)	P.E.
45356.2.11	BRSTP-1751(3)	R/W & UTILITIES
45356.3.11	BRSTP-1751(3)	CONST.

STATE OF NORTH CAROLINA
DIVISION OF HIGHWAYS

PLAN FOR PROPOSED
HIGHWAY EROSION CONTROL

UNION COUNTY

LOCATION: BRIDGE #077 OVER RAY'S FORK CREEK ON SR 1751 (MONROE-ANSONVILLE ROAD)

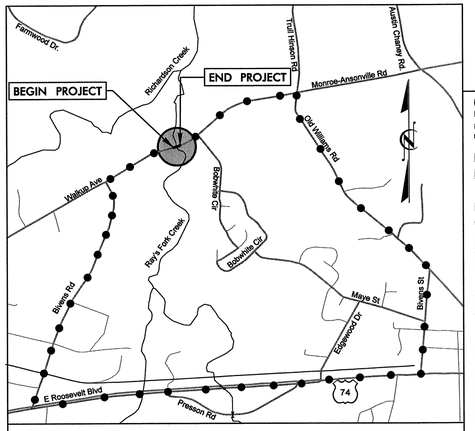

VICINITY MAP N.T.S.

EROSION CONTROL PLANS

NAD 83 NSRS 2007

EC-4

BEGIN TIP PROJECT BD-5110K
-L- STA. 10+60.00

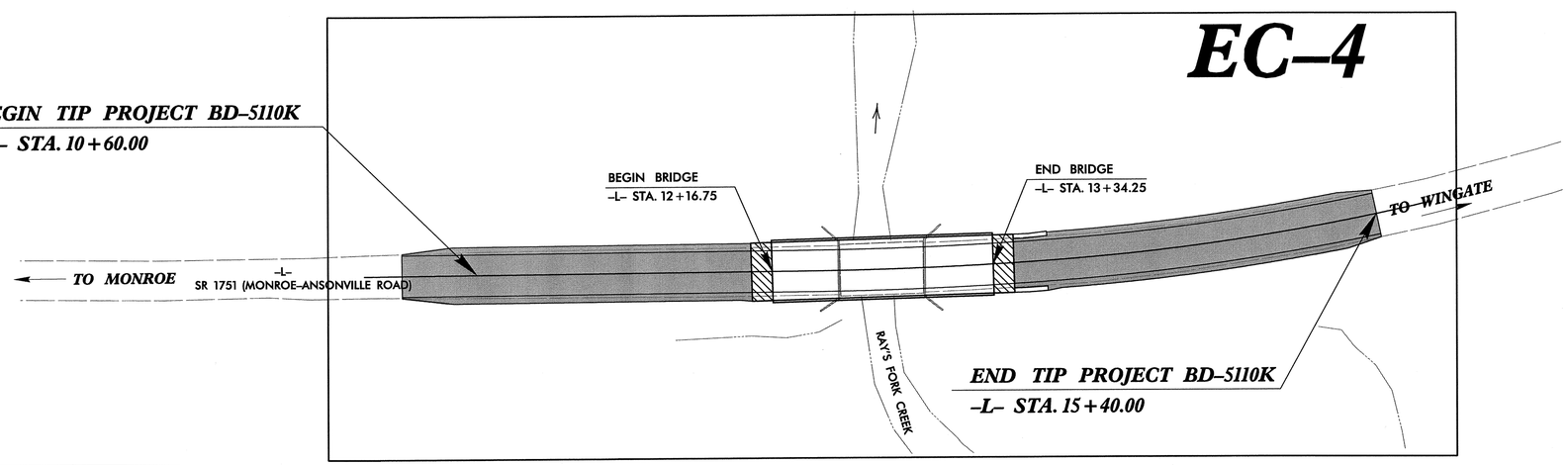

END TIP PROJECT BD-5110K
-L- STA. 15+40.00

EROSION AND SEDIMENT CONTROL MEASURES

The following roadway english standards as appear in "Roadway Standard Drawings"- Roadway Design Unit - N.C. Department of Transportation - Raleigh, N.C., dated January, 2012 and the latest revison thereto are applicable to this project and by reference hereby are considered a part of these plans.

Std. #	Description	Symbol
1605.01	Temporary Silt Fence	
1606.01	Special Sediment Control Fence	
1607.01	Gravel Construction Entrance	
1622.01	Guide for Temporary Berms and Slope Drains	
1630.01	Riser Basin	
1630.03	Temporary Silt Ditch	TSD
1630.04	Stilling Basin for Pumped Effluent	
1630.05	Temporary Diversion	TD
1630.06	Special Stilling Basin	
1632.01	Rock Inlet Sediment Trap Type A	A
1632.02	Rock Inlet Sediment Trap Type B	B
1632.03	Rock Inlet Sediment Trap Type C	C
1633.01	Temporary Rock Silt Check Type-A	
1633.02	Temporary Rock Silt Check Type-B	
1634.01	Temporary Rock Sediment Dam Type-A	
1634.02	Temporary Rock Sediment Dam Type-B	
1635.01	Rock Pipe Inlet Sediment Trap Type-A	
1635.02	Rock Pipe Inlet Sediment Trap Type-B	
SP	Silt Basin Type B	
SP	Skimmer Basin	
SP	Tiered Skimmer Basin	
SP	Infiltration Basin	
SP	Wattle	
SP	Coir Fiber Matting	

These Erosion and Sediment Control Plans comply with the regulations set forth by the NCG010000 general construction permit effective August 3, 2011 issued by the North Carolina Department of Environment and Natural resources Division of Water Quality.

THIS PROJECT HAS BEEN DESIGNED TO SENSITIVE WATERSHED STANDARDS.

ENVIRONMENTALLY SENSITIVE AREA(S) EXIST ON THIS PROJECT

Refer To E. C. Special Provisions for Special Considerations.

CONTRACT:

GRAPHIC SCALE

20 10 0 20 40

PLANS

ROADSIDE ENVIRONMENTAL UNIT
DIVISION OF HIGHWAYS
STATE OF NORTH CAROLINA

Level III Designer
Davin Morrison, PE #3126

NORTH CAROLINA PROFESSIONAL SEAL 038053 ENGINEER DAVIN C. MORRISON

8/7/12

Prepared In the Office of:

STV/RALPH WHITEHEAD ASSOCIATES, INC.
1000 West Morehead St., Ste. 200, Charlotte NC, 28208
NC License Number F-0991
FOR NORTH CAROLINA DEPARTMENT OF TRANSPORTATION

2012 STANDARD SPECIFICATIONS

PROJECT REFERENCE NO.	SHEET NO.
BD-5110K	EC-2
R/W SHEET NO.	

STV/ Ralph Whitehead Associates, Inc.
1000 West Morehead St., Ste. 200
Charlotte, NC 28208
NC License Number F-0991

HYDRAULICS ENGINEER

NORTH CAROLINA PROFESSIONAL SEAL 038089 ENGINEER CALVIN C. MORRISON
8/7/12

WATTLE WITH POLYACRYLAMIDE DETAIL

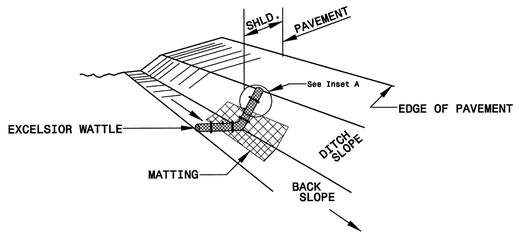

ISOMETRIC VIEW

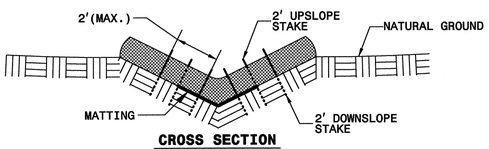

CROSS SECTION VEE DITCH

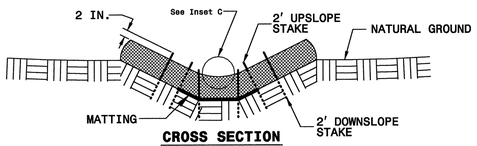

CROSS SECTION TRAPEZOIDAL DITCH

NOTES:

USE MINIMUM 12 IN. DIAMETER EXCELSIOR WATTLE.

USE 2 FT. WOODEN STAKES WITH A 2 IN. BY 2 IN. CROSS SECTION.

ONLY INSTALL WATTLE(S) TO A HEIGHT IN DITCH SO FLOW WILL NOT WASH AROUND WATTLE AND SCOUR DITCH SLOPES AND AS DIRECTED.

INSTALL A MINIMUM OF 2 UPSLOPE STAKES AND 4 DOWNSLOPE STAKES AT AN ANGLE TO WEDGE WATTLE TO BOTTOM OF DITCH.

PROVIDE STAPLES MADE OF 0.125 IN. DIAMETER STEEL WIRE FORMED INTO A U SHAPE NOT LESS THAN 12" IN LENGTH.

INSTALL STAPLES APPROXIMATELY EVERY 1 LINEAR FOOT ON BOTH SIDES OF WATTLE AND AT EACH END TO SECURE IT TO THE SOIL.

INSTALL MATTING IN ACCORDANCE WITH SECTION 1631 OF THE STANDARD SPECIFICATIONS.

PRIOR TO POLYACRYLAMIDE (PAM) APPLICATION, OBTAIN A SOIL SAMPLE FROM PROJECT LOCATION, AND FROM OFFSITE MATERIAL, AND ANALYZE FOR APPROPRIATE PAM FLOCCULANT TO BE APPLIED TO EACH WATTLE.

INITIALLY APPLY 3.5 OUNCES OF ANIONIC OR NEUTRALLY CHARGED POLYACRYLAMIDE (PAM) OVER WATTLE WHERE WATER WILL FLOW AND AFTER EVERY RAINFALL EVENT THAT IS EQUAL TO OR EXCEEDS 0.50 IN.

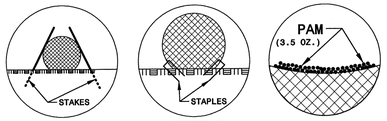

INSET A INSET B INSET C

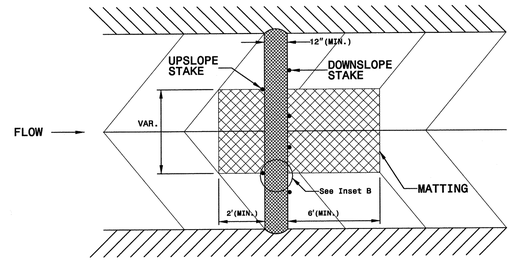

TOP VIEW

STABILIZATION REQUIREMENTS

Stabilization for this project shall comply with the time frame guidelines as specified by the NCG-010000 general construction permit effective August 3, 2011 issued by the North Carolina Department of Environment and Natural Resources Division of Water Quality. Temporary or permanent ground cover stabilization shall occur within 7 calendar days from the last landdisturbing
activity, with the following exceptions in which temporary or permanent ground cover shall be provided in 14 calendar days from the last land-disturbing activity:

· Slopes between 2:1 and 3:1, with a slope length of 10 ft. or less

· Slopes 3:1 or flatter, with a slope of length of 50 ft. or less

· Slopes 4:1 or flatter

The stabilization timeframe for High Quality Water (HQW) Zones shall be 7 calendar days with no exceptions for slope grades or lengths. High Quality Water Zones (HQW) Zones are defined by North Carolina Administrative Code 15A NCAC 04A.0105 (25). Temporary and permanent ground cover stabilization shall be achieved in accordance with the provisions in this contract and as directed.

WATTLE DETAIL

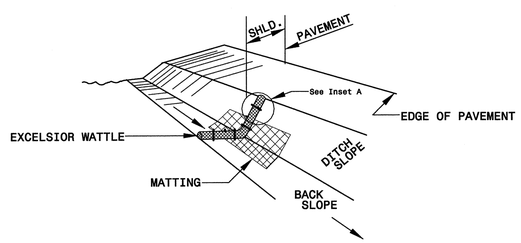

ISOMETRIC VIEW

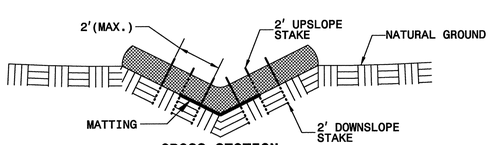

CROSS SECTION VEE DITCH

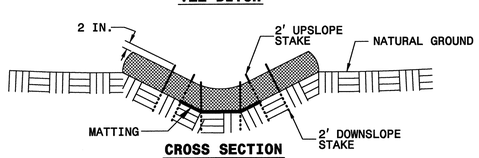

CROSS SECTION TRAPEZOIDAL DITCH

NOTES:

USE MINIMUM 12 IN. DIAMETER EXCELSIOR WATTLE.

USE 2 FT. WOODEN STAKES WITH A 2 IN. BY 2 IN. CROSS SECTION.

ONLY INSTALL WATTLE(S) TO A HEIGHT IN DITCH SO FLOW WILL NOT WASH AROUND WATTLE AND SCOUR DITCH SLOPES AND AS DIRECTED.

INSTALL A MINIMUM OF 2 UPSLOPE STAKES AND 4 DOWNSLOPE STAKES AT AN ANGLE TO WEDGE WATTLE TO BOTTOM OF DITCH.

PROVIDE STAPLES MADE OF 0.125 IN. DIAMETER STEEL WIRE FORMED INTO A U SHAPE NOT LESS THAN 12" IN LENGTH.

INSTALL STAPLES APPROXIMATELY EVERY 1 LINEAR FOOT ON BOTH SIDES OF WATTLE AND AT EACH END TO SECURE IT TO THE SOIL.

INSTALL MATTING IN ACCORDANCE WITH SECTION 1631 OF THE STANDARD SPECIFICATIONS.

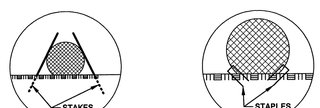

INSET A INSET B

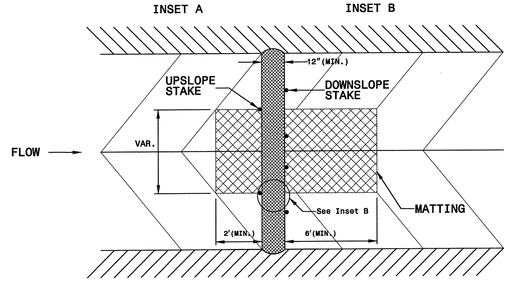

TOP VIEW

MATTING INSTALLATION DETAIL

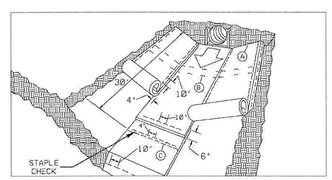

MATTING IN DITCHES

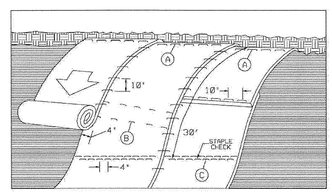

MATTING ON SLOPES

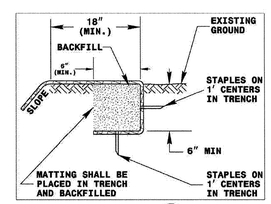

DIAGRAM (A)

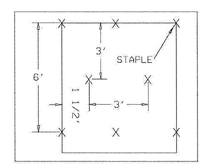

DIAGRAM (B)

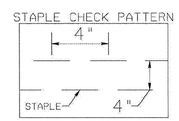

DIAGRAM (C)

NOTES:

THIS DETAIL APPLIES TO STRAW, EXCELSIOR, AND PERMANENT SOIL REINFORCEMENT MAT (PSRM) INSTALLATION.

STAPLES SHALL BE NO. 11 GAUGE STEEL WIRE FORMED INTO A "U" SHAPE WITH A MINIMUM THROAT WIDTH OF 1 INCH AND NOT LESS THAN 6 INCHES IN LENGTH.

r:\roadway\proj\EC\BD5110K_rdy_EC02.dgn

8/6/2012

PROJECT REFERENCE NO.	SHEET NO.
BD-5110K	EC-3
R/W SHEET NO.	

STV/ Ralph Whitehead Associates, Inc.
1000 West Morehead St. Ste. 200
Charlotte, NC 28208
NC License Number F-0991

HYDRAULICS ENGINEER

NORTH CAROLINA PROFESSIONAL SEAL 038080 ENGINEER DAVID C. MORRISON
8/7/12

DIVISION OF HIGHWAYS
STATE OF NORTH CAROLINA

SOIL STABILIZATION SUMMARY SHEET

MATTING FOR EROSION CONTROL (FOR SLOPE STABILIZATION)

CONST SHEET NO.	LINE	FROM STATION	TO STATION	SIDE	ESTIMATE (SY)
				SUBTOTAL	815
MISCELLANEOUS MATTING TO BE INSTALLED AS DIRECTED BY THE ENGINEER					85
				TOTAL	900
				SAY	900

COIR FIBER MATTING (FOR FLOODPLAIN BENCH)

CONST SHEET NO.	LINE	FROM STATION	TO STATION	SIDE	ESTIMATE (SY)
				SUBTOTAL	180
MISCELLANEOUS MATTING TO BE INSTALLED AS DIRECTED BY THE ENGINEER					20
				TOTAL	200
				SAY	200

MATTING FOR EROSION CONTROL (FOR DITCH STABILIZATION)

CONST SHEET NO.	LINE	FROM STATION	TO STATION	SIDE	ESTIMATE (SY)
4	-L- EX. DITCH	13+40	13+60	RT	15
				SUBTOTAL	15
MISCELLANEOUS MATTING TO BE INSTALLED AS DIRECTED BY THE ENGINEER					5
				TOTAL	20
				SAY	20

r:\roadway\proj\EC\BD5110K_rdy_EC03.dgn

8/6/2012

PROJECT REFERENCE NO.	SHEET NO.
BD-5110K	EC-4
R/W SHEET NO.	

STV / Ralph Whitehead Associates, Inc.
1000 West Morehead St. Ste. 200
Charlotte, NC 28208
NC License Number F-0991

HYDRAULICS ENGINEER

NORTH CAROLINA PROFESSIONAL SEAL 038093 ENGINEER MARTIN C. MORRISON 8/7/12

NAD 83 NSRS 2007

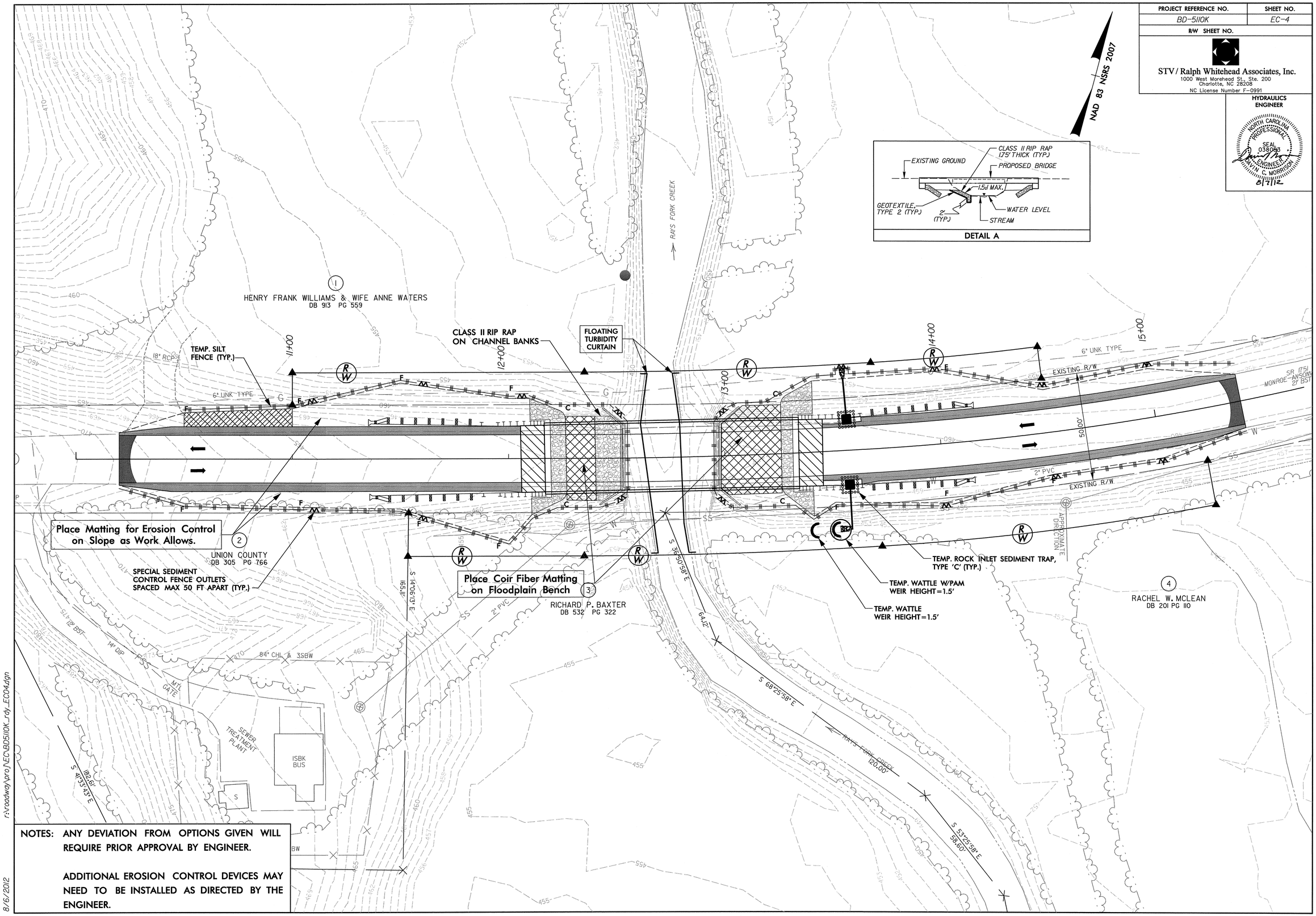

NOTES: ANY DEVIATION FROM OPTIONS GIVEN WILL REQUIRE PRIOR APPROVAL BY ENGINEER.

ADDITIONAL EROSION CONTROL DEVICES MAY NEED TO BE INSTALLED AS DIRECTED BY THE ENGINEER.

r:\roadway\proj\EC\BD5110K_rdy_EC04.dgn

8/6/2012

0 2.5 5	PROJ. REFERENCE NO.	SHEET NO.
	BD-5110K	X-1

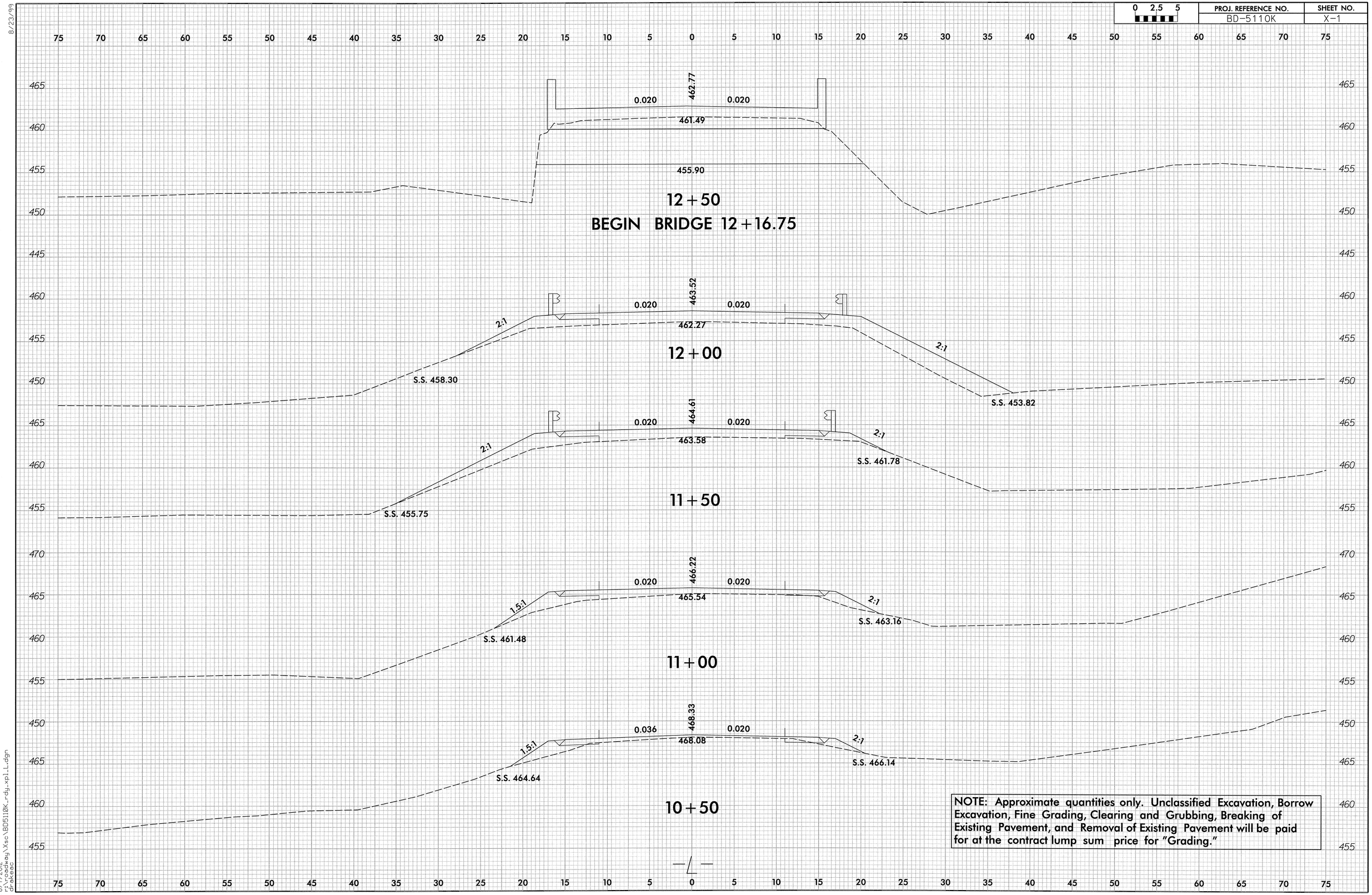

NOTE: Approximate quantities only. Unclassified Excavation, Borrow Excavation, Fine Grading, Clearing and Grubbing, Breaking of Existing Pavement, and Removal of Existing Pavement will be paid for at the contract lump sum price for "Grading."

8/23/99

8/7/2012
r:\roadway\Xsc\BD5110K_rdy_xpl_L.dgn
brskesc

0 2.5 5	PROJ. REFERENCE NO.	SHEET NO.
	BD-5110K	X-2

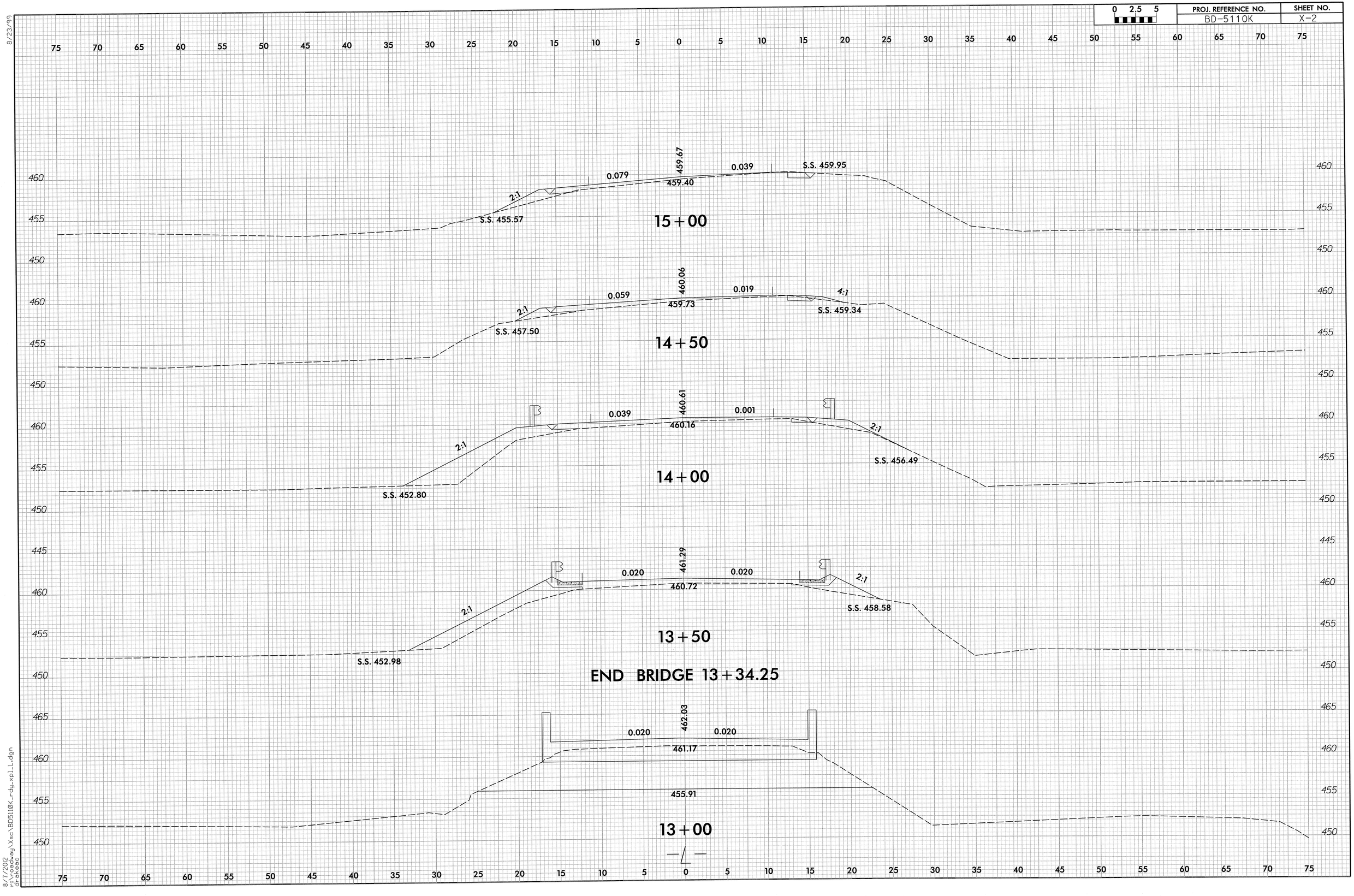

8/23/99

8/7/2012
r:\roadway\Xsc\BD5110K_rdg_xpl_L.dgn
drskeec

FA PROJECT NO.BRSTP-1751(3)

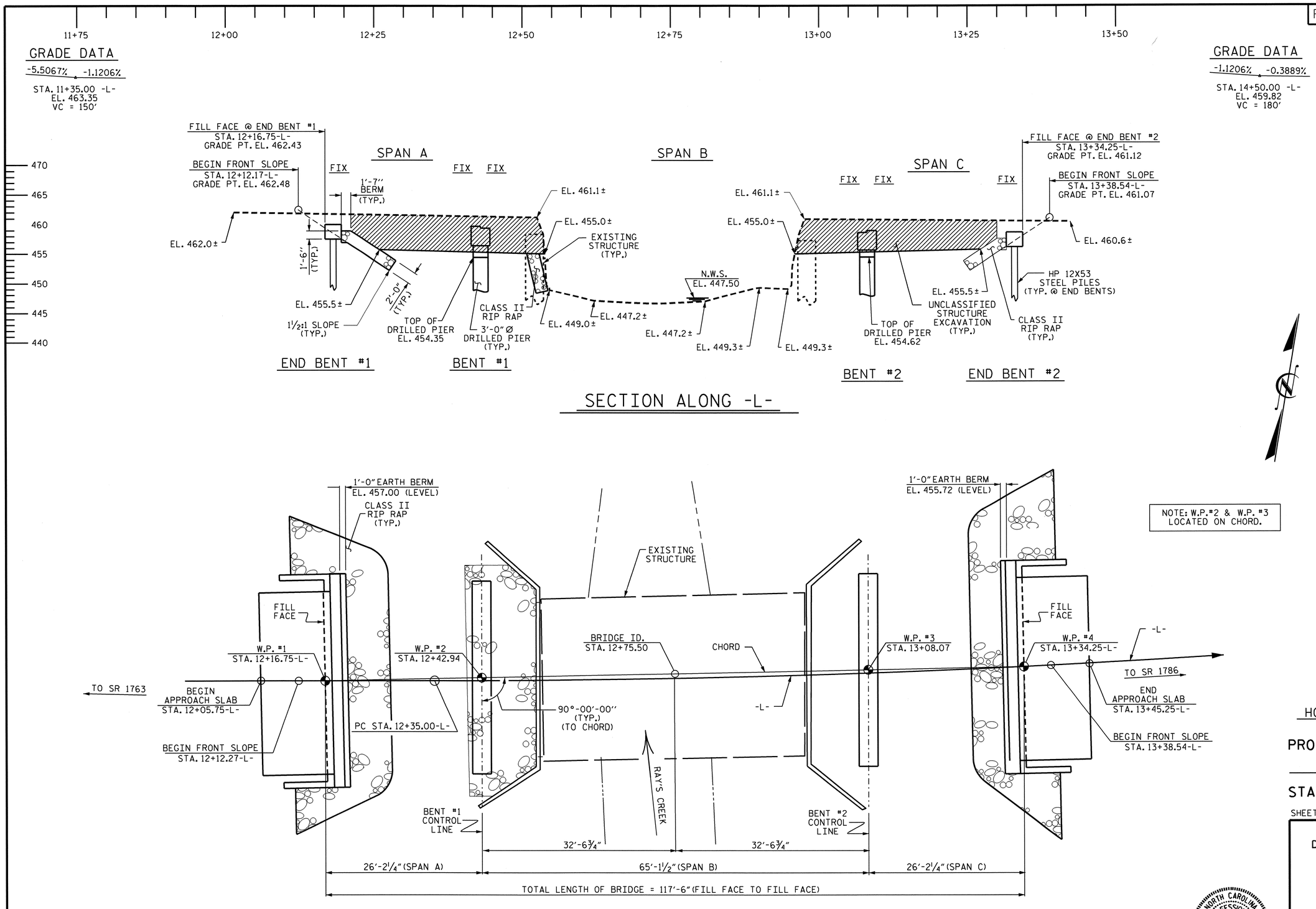

NOTE: W.P.#2 & W.P. #3 LOCATED ON CHORD.

PI STA. 13+02.52
Δ = 3°-42'-02.3" (LT)
D = 2°-44'-29.1"
L = 134.99'
T = 67.52'
R = 2090.00'
e = 0.047

PI STA. 15+55.31
Δ = 16°-59'-59.6" (LT)
D = 4°-37'-14.3"
L = 367.91'
T = 185.32'
R = 1240.00'
e= 0.059

HORIZONTAL CURVE DATA

PROJECT NO. BD-5110K

UNION COUNTY

STATION: 12+75.50-L-

SHEET 1 OF 2 REPLACES BRIDGE #77

STATE OF NORTH CAROLINA
DEPARTMENT OF TRANSPORTATION
RALEIGH

GENERAL DRAWING

FOR BRIDGE OVER
RAYS FORK ON SR 1751
(MONROE-ANSONVILLE RD)
BETWEEN SR 1763 AND SR 1786

NORTH CAROLINA PROFESSIONAL SEAL 23370 ENGINEER VIPUL A. PATEL
8/11/12

REVISIONS						SHEET NO.
NO.	BY:	DATE:	NO.	BY:	DATE:	S-1
1			3			TOTAL SHEETS
2			4			21

DRAWN BY : J. G. KHARVA DATE : 07/27/12
CHECKED BY : KEITH LAYNE DATE : 07/30/12

01-AUG-2012 14:54
R:\structures\Plans\Plans\BD-5110K_SD_gd.dgn
jpadams

FOUNDATION NOTES

FOR PILES, SEE SECTION 450 OF THE STANDARD SPECIFICATIONS.

PILES AT END BENT NO. 1 ARE DESIGNED FOR A FACTORED RESISTANCE OF 50 TONS PER PILE.

DRIVE PILES AT END BENT NO. 1 TO A REQUIRED DRIVING RESISTANCE OF 83 TONS PER PILE.

FOR DRILLED PIERS, SEE SECTION 411 OF THE STANDARD SPECIFICATIONS.

DRILLED PIERS AT BENT NO. 1 ARE DESIGNED FOR A FACTORED RESISTANCE OF 360.0 TONS PER PIER. CHECK FIELD CONDITIONS FOR THE REQUIRED TIP RESISTANCE OF 40.0 TSF.

PERMANENT STEEL CASINGS MAY BE REQUIRED FOR DRILLED PIERS AT BENT NO. 1. IF REQUIRED, DO NOT EXTEND PERMANENT CASINGS BELOW ELEVATION 442.0 WITHOUT PRIOR APPROVAL FROM THE ENGINEER. THE ENGINEER WILL DETERMINE THE NEED FOR PERMANENT CASINGS.

THE SCOUR CRITICAL ELEVATION FOR BENT NO. 1 IS ELEVATION 438.0. THE SCOUR CRITICAL ELEVATIONS ARE USED TO MONITOR POSSIBLE SCOUR PROBLEMS DURING THE LIFE OF THE STRUCTURE.

DRILLED PIERS AT BENT NO. 2 ARE DESIGNED FOR A FACTORED RESISTANCE OF 360.0 TONS PER PIER. CHECK FIELD CONDITIONS FOR THE REQUIRED TIP RESISTANCE OF 30.0 TSF.

PERMANENT STEEL CASINGS MAY BE REQUIRED FOR DRILLED PIERS AT BENT NO. 2. IF REQUIRED, DO NOT EXTEND PERMANENT CASINGS BELOW ELEVATION 442.0 WITHOUT PRIOR APPROVAL FROM THE ENGINEER. THE ENGINEER WILL DETERMINE THE NEED FOR PERMANENT CASINGS.

INSTALL DRILLED PIERS AT BENT NO. 2 THAT EXTEND TO AN ELEVATION NO HIGHER THAN 431.62, SATISFY THE REQUIRED TIP RESISTANCE AND HAVE A PENETRATION OF AT LEAST 6 FT INTO ROCK AS DEFINED BY ARTICLE 411-1 OF THE STANDARD SPECIFICATIONS.

THE SCOUR CRITICAL ELEVATION FOR BENT NO. 2 IS ELEVATION 438.0. THE SCOUR CRITICAL ELEVATIONS ARE USED TO MONITOR POSSIBLE SCOUR PROBLEMS DURING THE LIFE OF THE STRUCTURE.

SID INSPECTIONS MAY BE REQUIRED FOR DRILLED PIERS. THE ENGINEER WILL DETERMINE THE NEED FOR SID INSPECTIONS. FOR SID INSPECTIONS, SEE SECTION 411 OF THE STANDARD SPECIFICATIONS.

CSL TUBES ARE REQUIRED AND CSL TESTING MAY BE REQUIRED FOR THE DRILLED PIERS. THE ENGINEER WILL DETERMINE THE NEED FOR CSL TESTING. FOR CSL TESTING, SEE SECTION 411 OF THE STANDARD SPECIFICATIONS.

SPT MAY BE REQUIRED FOR DRILLED PIERS. THE ENGINEER WILL DETERMINE THE NEED FOR SPT. FOR SPT TESTING, SEE SECTION 411 OF THE STANDARD SPECIFICATIONS.

PILES AT END BENT NO. 2 ARE DESIGNED FOR A FACTORED RESISTANCE OF 50 TONS PER PILE.

DRIVE PILES AT END BENT NO. 2 TO A REQUIRED DRIVING RESISTANCE OF 83 TONS PER PILE.

THE DRILLED PIERS AT BENT No.1 ARE SOCKETED INTO WEATHERED ROCK.

PENETRATION OF 12 FT. INTO WEATHERED ROCK IS REQUIRED FOR AXIAL CAPACITY AT BENT No 1.

THE MINIMUM TIP ELEVATION OF 429.35 RECOMMENDED FOR BENT No 1 IS DUE TO AXIAL CAPACITY.

BENCH MARK: NCDOT MONUMENT BY8-3 (N 457735.023, E 1557998.488)
BASELINE POINT (-L- STA. 12+25.67, 16.84' LT.)
ELEV. 460.57, DATUM NAVD 88

STRUCTURE NOTES

ASSUMED LIVE LOAD = HL-93 OR ALTERNATE LOADING.

FOR OTHER DESIGN DATA AND GENERAL NOTES, SEE SHEET SN.

FOR EROSION CONTROL MEASURES SEE EROSION CONTROL PLANS.

THIS BRIDGE HAS BEEN DESIGNED IN ACCORDANCE WITH THE AASHTO LRFD BRIDGE DESIGN SPECIFICATIONS.

THE LOCATION OF THE CONSTRUCTION JOINT IN THE DRILLED PIERS IS BASED ON AN APPROXIMATE GROUND LINE ELEVATION. IF THE CONSTRUCTION JOINT IS ABOVE THE ACTUAL GROUND ELEVATION, THE CONTRACTOR SHALL PLACE THE CONSTRUCTION JOINT 1 FT. BELOW THE GROUND LINE.

THE EXISTING STRUCTURE CONSISTING OF A SINGLE SPAN (46'-6") WITH AN ASPHALT WEARING SURFACE ON STEEL PLANKS ON I-BEAMS WITH A CLEAR ROADWAY WIDTH OF 28.0 FT. WITH FULL HEIGHT REINFORCED CONCRETE ABUTMENTS AT END BENTS AND LOCATED AT PROPOSED STRUCTURE SITE SHALL BE REMOVED. THE EXISTING BRIDGE IS PRESENTLY POSTED BELOW THE LEGAL LOAD LIMIT. SHOULD THE STRUCTURAL INTEGRITY OF THE BRIDGE FURTHER DETERIORATE, THIS LOAD LIMITATION MAY BE REDUCED AS FOUND NECESSARY DURING THE LIFE OF THE PROJECT

REMOVAL OF THE EXISTING BRIDGE SHALL BE PERFORMED SO AS NOT TO ALLOW DEBRIS TO FALL INTO THE WATER. THE CONTRACTOR SHALL REMOVE THE BRIDGE AND SUBMIT PLANS FOR DEMOLITION IN ACCORDANCE WITH ARTICLE 402-2 OF THE STANDARD SPECIFICATIONS.

THE MATERIAL SHOWN IN THE CROSS-HATCHED AREA SHALL BE EXCAVATED FOR A DISTANCE OF 25 FT. EACH SIDE OF CENTERLINE ROADWAY AS DIRECTED BY THE ENGINEER. THIS WORK WILL BE PAID FOR AT THE CONTRACT LUMP SUM PRICE FOR UNCLASSIFIED STRUCTURE EXCAVATION. SEE SECTION 412 OF THE STANDARD SPECIFICATIONS.

THE SUBSTRUCTURE OF THE EXISTING BRIDGE INDICATED ON THE PLANS IS FROM THE BEST INFORMATION AVAILABLE. SINCE THIS INFORMATION IS SHOWN FOR THE CONVENIENCE OF THE CONTRACTOR, THE CONTRACTOR SHALL HAVE NO CLAIM WHATSOEVER AGAINST THE DEPARTMENT OF TRANSPORTATION FOR ANY DELAYS OR ADDITIONAL COST INCURRED BASED ON DIFFERENCES BETWEEN THE EXISTING BRIDGE SUBSTRUCTURE SHOWN ON THE PLANS AND THE ACTUAL CONDITIONS AT THE PROJECT SITE.

ASPHALT WEARING SURFACE IS INCLUDED IN ROADWAY QUANTITY ON ROADWAY PLANS.

THIS STRUCTURE HAS BEEN DESIGNED IN ACCORDANCE WITH HEC 18, "EVALUATING SCOUR AT BRIDGES", MAY, 2001.

THE CONTRACTOR SHALL PROVIDE INDEPENDENT ASSURANCE SAMPLES OF REINFORCING STEEL AS FOLLOWS: FOR PROJECTS REQUIRING UP TO 400 TONS OF REINFORCING STEEL, ONE 30 INCH SAMPLE OF EACH SIZE BAR USED, AND FOR PROJECTS REQUIRING OVER 400 TONS OF REINFORCING STEEL, TWO 30 INCH SAMPLES OF EACH SIZE BAR USED. THE BARS FROM WHICH THE SAMPLES ARE TAKEN MUST THEN BE SPLICED WITH REPLACEMENT BARS OF THE SIZE AND LENGTH OF THE SAMPLE, PLUS A MINIMUM LAP SPLICE OF THIRTY BAR DIAMETERS. PAYMENT FOR THE SAMPLES OF REINFORCING STEEL SHALL BE CONSIDERED INCIDENTAL TO VARIOUS PAY ITEMS.

INASMUCH AS THE PAINT SYSTEM ON THE EXISTING STRUCTURAL STEEL CONTAINS LEAD, THE CONTRACTOR'S ATTENTION IS DIRECTED TO ARTICLE 107-1 OF THE STANDARD SPECIFICATIONS. ANY COSTS RESULTING FROM COMPLIANCE WITH APPLICABLE STATE OR FEDERAL REGULATIONS PERTAINING TO HANDLING OF MATERIALS CONTAINING LEAD BASED PAINT SHALL BE INCLUDED IN THE BID PRICE FOR "REMOVAL OF EXISTING STRUCTURE AT STATION 12+75.00 L-."

FOR SUBMITTAL OF WORKING DRAWINGS, SEE SPECIAL PROVISIONS.

FOR FALSEWORK AND FORMWORK, SEE SPECIAL PROVISIONS.

FOR CRANE SAFETY, SEE SPECIAL PROVISIONS.

FOR GROUT FOR STRUCTURES, SEE SPECIAL PROVISIONS.

THIS BRIDGE IS LOCATED IN SEISMIC ZONE 1.

STRUCTURE TOTAL BILL OF MATERIAL

	REMOVAL OF EXISTING STRUCTURE	3'-0" DIA. DRILLED PIERS IN SOIL	3'-0" DIA. DRILLED PIERS NOT IN SOIL	PERMANENT STEEL CASING FOR 3'-0" DIA. DRILLED PIER	SID INSPECTIONS	SPT TESTING	CSL TESTING	UNCLASSIFIED STRUCTURE EXCAVATION	CLASS A CONCRETE	BRIDGE APPROACH SLABS	REINFORCING STEEL	SPIRAL COLUMN REINFORCING STEEL	HP12X53 STEEL PILES		VERTICAL CONCRETE BARRIER RAIL	RIP RAP CLASS II (2'-0" THICK)	GEOTEXTILE FOR DRAINAGE	ELASTOMERIC BEARINGS	3'-0" X 1'-9" PRESTRESSED CONCRETE CORED SLABS		3'-0" X 2'-0" PRESTRESSED CONCRETE CORED SLABS	
	LUMP SUM	LIN. FT.	LIN. FT.	LIN. FT.	EACH	EACH	EACH	LUMP SUM	CU.YDS.	LUMP SUM	LBS.	LBS.	NO.	LIN.FT.	LIN.FT.	TONS	SQ. YDS.	LUMP SUM	No.	LIN.FT.	No.	LIN.FT.
SUPERSTRUCTURE	LUMP SUM							LUMP SUM		LUMP SUM					230.75			LUMP SUM	22	550.00	11	715.00
END BENT #1									14.3		2,127		7	125.0		55	60					
BENT #1		55.0	20.0	37.1					14.8		7,973	1,390				50	55					
BENT #2		39.0	30.0	37.9					14.0		7,495	1,239										
END BENT #2									14.3		2,127		7	105.0		55	60					
TOTAL	LUMP SUM	94.0	50.0	75.0	1	1	1	LUMP SUM	57.4	LUMP SUM	19,722	2,629	14	230.0	230.75	160	175	LUMP SUM	22	550.00	11	715.00

HYDRAULIC DATA

DESIGN DISCHARGE	=	3300 c.f.s.
FREQUENCY OF DESIGN FLOOD	=	50 YRS.
DESIGN HIGH WATER ELEVATION	=	458.43
DRAINAGE AREA	=	14.7 SQ. MI.
BASE DISCHARGE (Q100)	=	3995 c.f.s.
BASE HIGH WATER ELEVATION	=	460.17

OVERTOPPING FLOOD DATA

OVERTOPPING DISCHARGE	=	< 3995 c.f.s.
FREQUENCY OF OVERTOPPING FLOOD	=	< 100 YRS.
OVERTOPPING FLOOD ELEVATION	=	459.50

PROJECT NO. BD-5110K
UNION COUNTY
STATION: 12+75.50 -L-

SHEET 2 OF 2

STATE OF NORTH CAROLINA
DEPARTMENT OF TRANSPORTATION
RALEIGH

STRUCTURE
TOTAL BILL OF MATERIAL
AND
STRUCTURE NOTES

NORTH CAROLINA PROFESSIONAL SEAL 23371 ENGINEER V. A. PATEL
8/1/12

REVISIONS						SHEET NO.
NO.	BY:	DATE:	NO.	BY:	DATE:	S-2
1			3			TOTAL SHEETS
2			4			21

DRAWN BY : K. D. LAYNE DATE : 7/27/12
CHECKED BY : V.A. PATEL DATE : 8/1/12

01-AUG-2012 14:54
R:\structures\Plans\Plans\BD-5110K_SD_gd.dgn
jpadams

LOAD AND RESISTANCE FACTOR RATING (LRFD) SUMMARY FOR PRESTRESSED CONCRETE GIRDERS

LEVEL		VEHICLE	WEIGHT (W) (TONS)	CONTROLLING LOAD RATING	MINIMUM RATING FACTORS (RF)	TONS = W X RF	STRENGTH I LIMIT STATE											SERVICE III LIMIT STATE						COMMENT NUMBER
							LIVELOAD FACTORS	MOMENT					SHEAR					LIVELOAD FACTORS	MOMENT					
								DISTRIBUTION FACTORS (DF)	RATING FACTOR	SPAN	GIRDER LOCATION	DISTANCE FROM LEFT END OF SPAN (ft)	DISTRIBUTION FACTORS (DF)	RATING FACTOR	SPAN	GIRDER LOCATION	DISTANCE FROM LEFT END OF SPAN (ft)		DISTRIBUTION FACTORS (DF)	RATING FACTOR	SPAN	GIRDER LOCATION	DISTANCE FROM LEFT END OF SPAN (ft)	
DESIGN LOAD RATING		HL-93(Inv)	N/A	1	1.018	--	1.75	0.284	2.53	25'	EL	12	0.591	**1.02**	25'	EL	**1.2**	0.80	0.284	2.34	25'	EL	12	
		HL-93(Opr)	N/A	--	1.319	--	1.35	0.284	3.29	25'	EL	12	0.591	1.32	25'	EL	1.2	N/A	--	--	--	--	--	
		HS-20(Inv)	36.000	2	1.178	42.397	1.75	0.284	3.76	25'	EL	12	0.591	**1.18**	25'	EL	**1.2**	0.80	0.284	3.46	25'	EL	12	
		HS-20(Opr)	36.000	--	1.527	54.959	1.35	0.284	4.87	25'	EL	12	0.591	1.53	25'	EL	1.2	N/A	--	--	--	--	--	
LEGAL LOAD RATING	SV	SNSH	13.500	--	2.728	36.833	1.4	0.284	6.83	25'	EL	12	0.591	2.73	25'	EL	1.2	0.80	0.284	5.04	25'	EL	12	
		SNGARBS2	20.000	--	2.186	43.718	1.4	0.284	6.39	25'	EL	12	0.591	2.19	25'	EL	1.2	0.80	0.284	4.72	25'	EL	12	
		SNAGRIS2	22.000	--	2.141	47.107	1.4	0.284	6.83	25'	EL	12	0.591	2.14	25'	EL	1.2	0.80	0.284	5.04	25'	EL	12	
		SNCOTTS3	27.250	--	1.385	37.731	1.4	0.284	3.57	25'	EL	12	0.591	1.38	25'	EL	1.2	0.80	0.284	2.64	25'	EL	12	
		SNAGGRS4	34.925	--	1.332	46.511	1.4	0.284	3.56	25'	EL	12	0.591	1.33	25'	EL	1.2	0.80	0.284	2.62	25'	EL	12	
		SNS5A	35.550	--	1.392	49.477	1.4	0.284	3.45	25'	EL	12	0.591	1.39	25'	EL	1.2	0.80	0.284	2.54	25'	EL	12	
		SNS6A	39.950	--	1.334	53.31	1.4	0.284	3.23	25'	EL	12	0.591	1.33	25'	EL	1.2	0.80	0.284	2.39	25'	EL	12	
		SNS7B	42.000	--	1.344	56.455	1.4	0.284	3.23	25'	EL	12	0.591	1.34	25'	EL	1.2	0.80	0.284	2.37	25'	EL	12	
	TTST	TNAGRIT3	33.000	--	1.634	53.934	1.4	0.284	4.55	25'	EL	12	0.591	1.63	25'	EL	1.2	0.80	0.284	3.36	25'	EL	12	
		TNT4A	33.075	--	1.483	49.049	1.4	0.284	3.95	25'	EL	12	0.591	1.48	25'	EL	1.2	0.80	0.284	2.92	25'	EL	12	
		TNT6A	41.600	--	1.398	58.138	1.4	0.284	3.71	25'	EL	12	0.591	1.4	25'	EL	1.2	0.80	0.284	2.74	25'	EL	12	
		TNT7A	42.000	--	1.391	58.419	1.4	0.284	3.84	25'	EL	12	0.591	1.39	25'	EL	1.2	0.80	0.284	2.83	25'	EL	12	
		TNT7B	42.000	--	1.343	56.385	1.4	0.284	3.46	25'	EL	12	0.591	1.34	25'	EL	1.2	0.80	0.284	2.55	25'	EL	12	
		TNAGRIT4	43.000	--	1.340	57.604	1.4	0.284	3.71	25'	EL	12	0.591	1.34	25'	EL	1.2	0.80	0.284	2.73	25'	EL	12	
		TNAGT5A	45.000	--	1.367	61.501	1.4	0.284	3.71	25'	EL	12	0.591	1.37	25'	EL	1.2	0.80	0.284	2.73	25'	EL	12	
		TNAGT5B	45.000	3	1.239	55.766	1.4	0.284	3.65	25'	EL	9.6	0.591	**1.24**	25'	EL	**1.2**	0.80	0.284	2.71	25'	EL	9.6	

LOAD FACTORS:

DESIGN LOAD RATING FACTORS	LIMIT STATE	γ_{DC}	γ_{DW}
	STRENGTH I	1.25	1.50
	SERVICE III	1.00	1.00

NOTES:

MINIMUM RATING FACTORS ARE BASED ON THE STRENGTH I AND SERVICE III LIMIT STATES.

ALLOWABLE STRESSES FOR SERVICE III LIMIT STATE ARE AS REQUIRED FOR DESIGN.

COMMENTS:

1.
2.
3.
4.

(#) CONTROLLING LOAD RATING

(1) DESIGN LOAD RATING (HL-93)
(2) DESIGN LOAD RATING (HS-20)
(3) LEGAL LOAD RATING **

** SEE CHART FOR VEHICLE TYPE

GIRDER LOCATION

I - INTERIOR GIRDER
EL - EXTERIOR LEFT GIRDER
ER - EXTERIOR RIGHT GIRDER

LRFR SUMMARY

FOR SPAN A & C

PROJECT NO. BD-5110K
UNION COUNTY
STATION: 12+75.50 -L-

STATE OF NORTH CAROLINA
DEPARTMENT OF TRANSPORTATION
RALEIGH

STANDARD
LRFR SUMMARY FOR
25' CORED SLAB UNIT
90° SKEW
(NON-INTERSTATE TRAFFIC)

NORTH CAROLINA PROFESSIONAL SEAL 23371 ENGINEER VIPUL A. PATEL
8/1/12

REVISIONS						SHEET NO.
NO.	BY:	DATE:	NO.	BY:	DATE:	S-3
1			3			TOTAL SHEETS
2			4			21

ASSEMBLED BY : H.T. DIEU DATE : 7/26/12
CHECKED BY : K. LAYNE DATE : 7/30/12
DRAWN BY : CVC 6/10
CHECKED BY : DNS 6/10

01-AUG-2012 14:54
R:\structures\Plans\Plans\BD-5110K_SD_LRFR.dgn
jpadams

STD. NO. 21LRFR1_90S_25L

LOAD AND RESISTANCE FACTOR RATING (LRFD) SUMMARY FOR PRESTRESSED CONCRETE GIRDERS

LEVEL		VEHICLE	WEIGHT (W) (TONS)	CONTROLLING LOAD RATING	MINIMUM RATING FACTORS (RF)	TONS = W X RF	STRENGTH I LIMIT STATE											SERVICE III LIMIT STATE						COMMENT NUMBER
								MOMENT					SHEAR						MOMENT					
							LIVELOAD FACTORS	DISTRIBUTION FACTORS (DF)	RATING FACTOR	SPAN	GIRDER LOCATION	DISTANCE FROM LEFT END OF SPAN (ft)	DISTRIBUTION FACTORS (DF)	RATING FACTOR	SPAN	GIRDER LOCATION	DISTANCE FROM LEFT END OF SPAN (ft)	LIVELOAD FACTORS	DISTRIBUTION FACTORS (DF)	RATING FACTOR	SPAN	GIRDER LOCATION	DISTANCE FROM LEFT END OF SPAN (ft)	
DESIGN LOAD RATING		HL-93(Inv)	N/A	**1**	1.018	--	1.75	0.274	1.05	65'	EL	32	0.513	1.2	65'	EL	6.4	0.80	0.274	**1.02**	65'	EL	**32**	
		HL-93(Opr)	N/A	--	1.358	--	1.35	0.274	1.36	65'	EL	32	0.513	1.56	65'	EL	6.4	N/A	--	--	--	--	--	
		HS-20(Inv)	36.000	**2**	1.306	47.014	1.75	0.274	1.34	65'	EL	32	0.513	1.48	65'	EL	6.4	0.80	0.274	**1.31**	65'	EL	**32**	
		HS-20(Opr)	36.000	--	1.742	62.706	1.35	0.274	1.74	65'	EL	32	0.513	1.92	65'	EL	6.4	N/A	--	--	--	--	--	
LEGAL LOAD RATING	SV	SNSH	13.500	--	2.868	38.725	1.4	0.274	3.69	65'	EL	32	0.513	4.33	65'	EL	6.4	0.80	0.274	2.87	65'	EL	32	
		SNGARBS2	20.000	--	2.171	43.424	1.4	0.274	2.79	65'	EL	32	0.513	3.11	65'	EL	6.4	0.80	0.274	2.17	65'	EL	32	
		SNAGRIS2	22.000	--	2.071	45.552	1.4	0.274	2.66	65'	EL	32	0.513	2.89	65'	EL	6.4	0.80	0.274	2.07	65'	EL	32	
		SNCOTTS3	27.250	--	1.428	38.924	1.4	0.274	1.84	65'	EL	32	0.513	2.17	65'	EL	6.4	0.80	0.274	1.43	65'	EL	32	
		SNAGGRS4	34.925	--	1.206	42.136	1.4	0.274	1.55	65'	EL	32	0.513	1.81	65'	EL	6.4	0.80	0.274	1.21	65'	EL	32	
		SNS5A	35.550	--	1.179	41.911	1.4	0.274	1.52	65'	EL	32	0.513	1.85	65'	EL	6.4	0.80	0.274	1.18	65'	EL	32	
		SNS6A	39.950	--	1.087	43.43	1.4	0.274	1.4	65'	EL	32	0.513	1.69	65'	EL	6.4	0.80	0.274	1.09	65'	EL	32	
		SNS7B	42.000	--	1.035	43.489	1.4	0.274	1.33	65'	EL	32	0.513	1.67	65'	EL	6.4	0.80	0.274	1.04	65'	EL	32	
	TTST	TNAGRIT3	33.000	--	1.327	43.8	1.4	0.274	1.71	65'	EL	32	0.513	2.01	65'	EL	6.4	0.80	0.274	1.33	65'	EL	32	
		TNT4A	33.075	--	1.335	44.142	1.4	0.274	1.72	65'	EL	32	0.513	1.95	65'	EL	6.4	0.80	0.274	1.33	65'	EL	32	
		TNT6A	41.600	--	1.096	45.613	1.4	0.274	1.41	65'	EL	32	0.513	1.8	65'	EL	6.4	0.80	0.274	1.10	65'	EL	32	
		TNT7A	42.000	--	1.105	46.4	1.4	0.274	1.42	65'	EL	32	0.513	1.74	65'	EL	6.4	0.80	0.274	1.10	65'	EL	32	
		TNT7B	42.000	--	1.15	48.298	1.4	0.274	1.48	65'	EL	32	0.513	1.62	65'	EL	6.4	0.80	0.274	1.15	65'	EL	32	
		TNAGRIT4	43.000	--	1.089	46.815	1.4	0.274	1.4	65'	EL	32	0.513	1.57	65'	EL	6.4	0.80	0.274	1.09	65'	EL	32	
		TNAGT5A	45.000	--	1.024	46.084	1.4	0.274	1.32	65'	EL	32	0.513	1.57	65'	EL	6.4	0.80	0.274	1.02	65'	EL	32	
		TNAGT5B	45.000	**3**	1.01	45.431	1.4	0.274	1.3	65'	EL	32	0.513	1.49	65'	EL	6.4	0.80	0.274	**1.01**	65'	EL	**32**	

LOAD FACTORS:

DESIGN LOAD RATING FACTORS	LIMIT STATE	γ_{DC}	γ_{DW}
	STRENGTH I	1.25	1.50
	SERVICE III	1.00	1.00

NOTES:

MINIMUM RATING FACTORS ARE BASED ON THE STRENGTH I AND SERVICE III LIMIT STATES.

ALLOWABLE STRESSES FOR SERVICE III LIMIT STATE ARE AS REQUIRED FOR DESIGN.

COMMENTS:

1.
2.
3.
4.

(#) CONTROLLING LOAD RATING

(1) DESIGN LOAD RATING (HL-93)
(2) DESIGN LOAD RATING (HS-20)
(3) LEGAL LOAD RATING **
** SEE CHART FOR VEHICLE TYPE

GIRDER LOCATION

I - INTERIOR GIRDER
EL - EXTERIOR LEFT GIRDER
ER - EXTERIOR RIGHT GIRDER

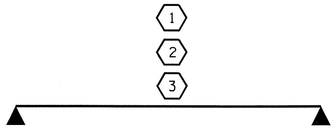

LRFR SUMMARY
FOR SPAN B

PROJECT NO. BD-5110K
UNION COUNTY
STATION: 12+75.50 -L-

STATE OF NORTH CAROLINA
DEPARTMENT OF TRANSPORTATION
RALEIGH

STANDARD
LRFR SUMMARY FOR
65' CORED SLAB UNIT
90° SKEW
(NON-INTERSTATE TRAFFIC)

NORTH CAROLINA PROFESSIONAL SEAL 23371 ENGINEER VIRUL A. PATEL
8/1/12

REVISIONS						SHEET NO.
NO.	BY:	DATE:	NO.	BY:	DATE:	S-4
1			3			TOTAL SHEETS
2			4			21

ASSEMBLED BY : H.T. DIEU DATE : 7/26/12
CHECKED BY : K. LAYNE DATE : 7/30/12
DRAWN BY : CVC 6/10
CHECKED BY : DNS 6/10

01-AUG-2012 14:54
R:\structures\Plans\Plans\BD-5110K_SD_LRFR.dgn
jpadams

STD. NO. 24LRFR1_90S_65L

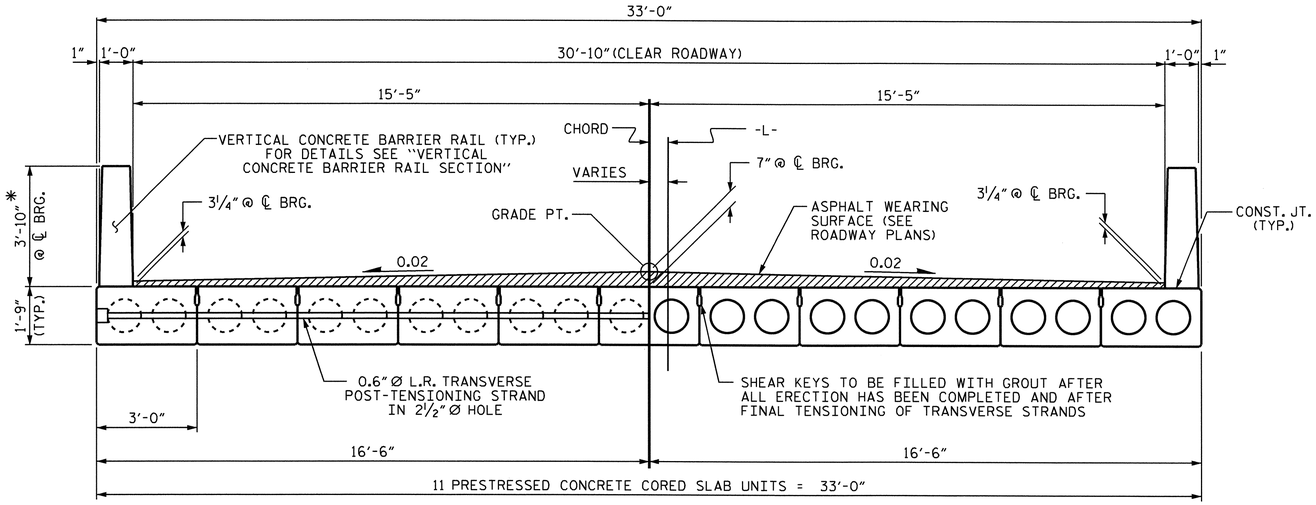

HALF SECTION
AT INTERMEDIATE DIAPHRAGMS

HALF SECTION
THROUGH VOIDS

TYPICAL SECTION

* - THE MAXIMUM BARRIER RAIL HEIGHT AND ASPHALT THICKNESS IS SHOWN. THE HEIGHT OF THE BARRIER RAIL AND ASPHALT THICKNESS VARIES WHILE THE TOP OF THE BARRIER RAIL FOLLOWS THE PROFILE OF THE GUTTERLINE. FOR RAIL HEIGHT DETAILS AND ASPHALT THICKNESS SEE THE "VERTICAL CONCRETE BARRIER RAIL SECTION" DETAIL.

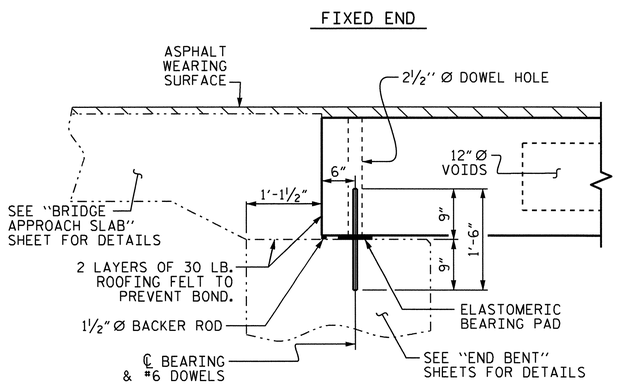

SECTION AT END BENT

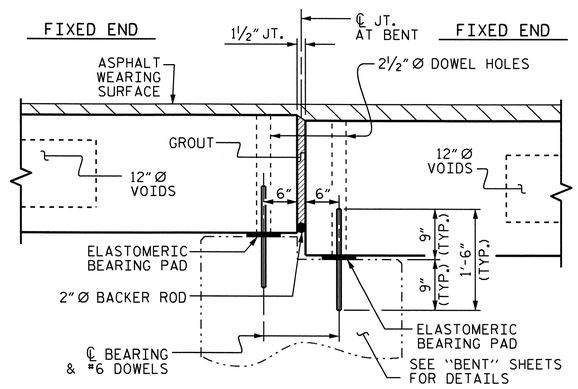

SECTION AT BENT No. 1

(BENT No. 2 SIM.)

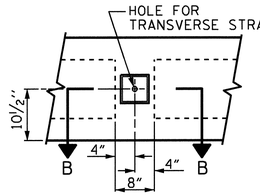

ELEVATION VIEW

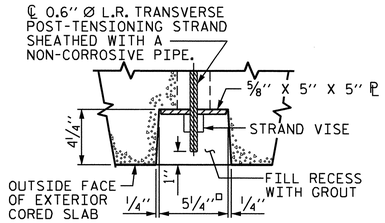

SECTION B-B

GROUTED RECESS AT END OF POST-TENSIONED STRAND OF CORED SLABS

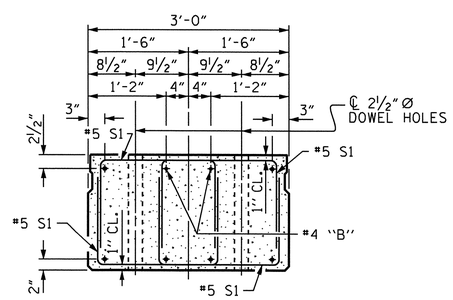

END ELEVATION

SHOWING PLACEMENT OF DOUBLE STIRRUPS AND LOCATION OF DOWEL HOLES. (STRAND LAYOUT NOT SHOWN.) INTERIOR SLAB UNIT SHOWN-EXTERIOR SLAB UNIT SIMILAR EXCEPT SHEAR KEY LOCATION.

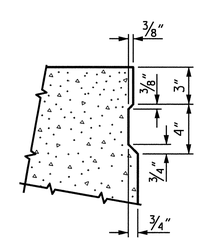

SHEAR KEY DETAIL

NOTE: OMIT SHEAR KEY ON OUTSIDE FACE OF EXTERIOR CORED SLABS.

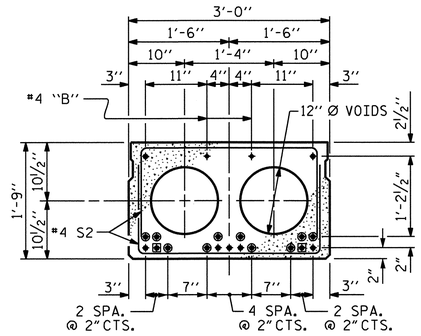

INTERIOR SLAB SECTION (25', 30' & 35' UNIT)

(9 STRANDS REQUIRED)

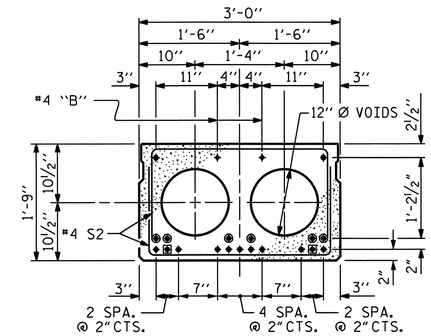

INTERIOR SLAB SECTION (40' & 45' UNIT)

(13 STRANDS REQUIRED)

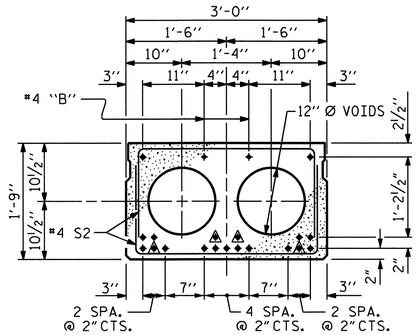

INTERIOR SLAB SECTION (50' & 55' UNIT)

(19 STRANDS REQUIRED)

0.6" Ø LOW RELAXATION STRAND LAYOUT

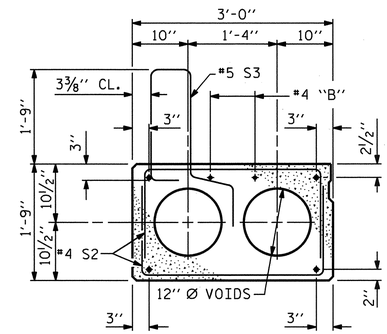

EXT. SLAB SECTION

(FOR PRESTRESSED STRAND LAYOUT, SEE INTERIOR SLAB SECTION.)

▲ BOND SHALL BE BROKEN ON THESE STRANDS FOR A DISTANCE OF 6'-0" FROM END OF CORED SLAB UNIT. SEE STANDARD SPECIFICATIONS, ARTICLE 1078-7.

◉ BOND SHALL BE BROKEN ON THESE STRANDS FOR A DISTANCE OF 2'-0" FROM END OF CORED SLAB UNIT. SEE STANDARD SPECIFICATIONS, ARTICLE 1078-7.

◉ OPTIONAL FULL LENGTH DEBONDED STRANDS. THESE STRANDS ARE NOT REQUIRED. IF THE FABRICATOR CHOOSES TO INCLUDE THESE STRANDS IN THE CORED SLAB UNIT, THE STRANDS SHALL BE DEBONDED FOR THE FULL LENGTH OF THE UNIT AT NO ADDITIONAL COST. SEE STANDARD SPECIFICATIONS, ARTICLE 1078-7.

DEBONDING LEGEND

PROJECT NO. BD-5110K
UNION COUNTY
STATION: 12+75.50 -L-

SHEET 1 OF 3

STATE OF NORTH CAROLINA
DEPARTMENT OF TRANSPORTATION
RALEIGH

STANDARD
3'-0" X 1'-9"
PRESTRESSED CONCRETE
CORED SLAB UNIT
90° SKEW

NORTH CAROLINA PROFESSIONAL SEAL 23371 ENGINEER VIMAL A. PATEL
8/1/12

REVISIONS								SHEET NO.
NO.	BY:	DATE:	NO.	BY:	DATE:			S-5
1			3					TOTAL SHEETS
2			4					21

ASSEMBLED BY :	H.T. DIEU	DATE : 7/26/12	
CHECKED BY :	K. LAYNE	DATE : 7/30/12	
DRAWN BY : DGE 5/09	REV. 12/11	MAA/AAC	
CHECKED BY : BCH 6/09			

01-AUG-2012 14:54
R:\Structures\Plans\Plans\BD-5110K_SD_CS.dgn
jpadams

STD. NO. 21" PCS2_33_90S

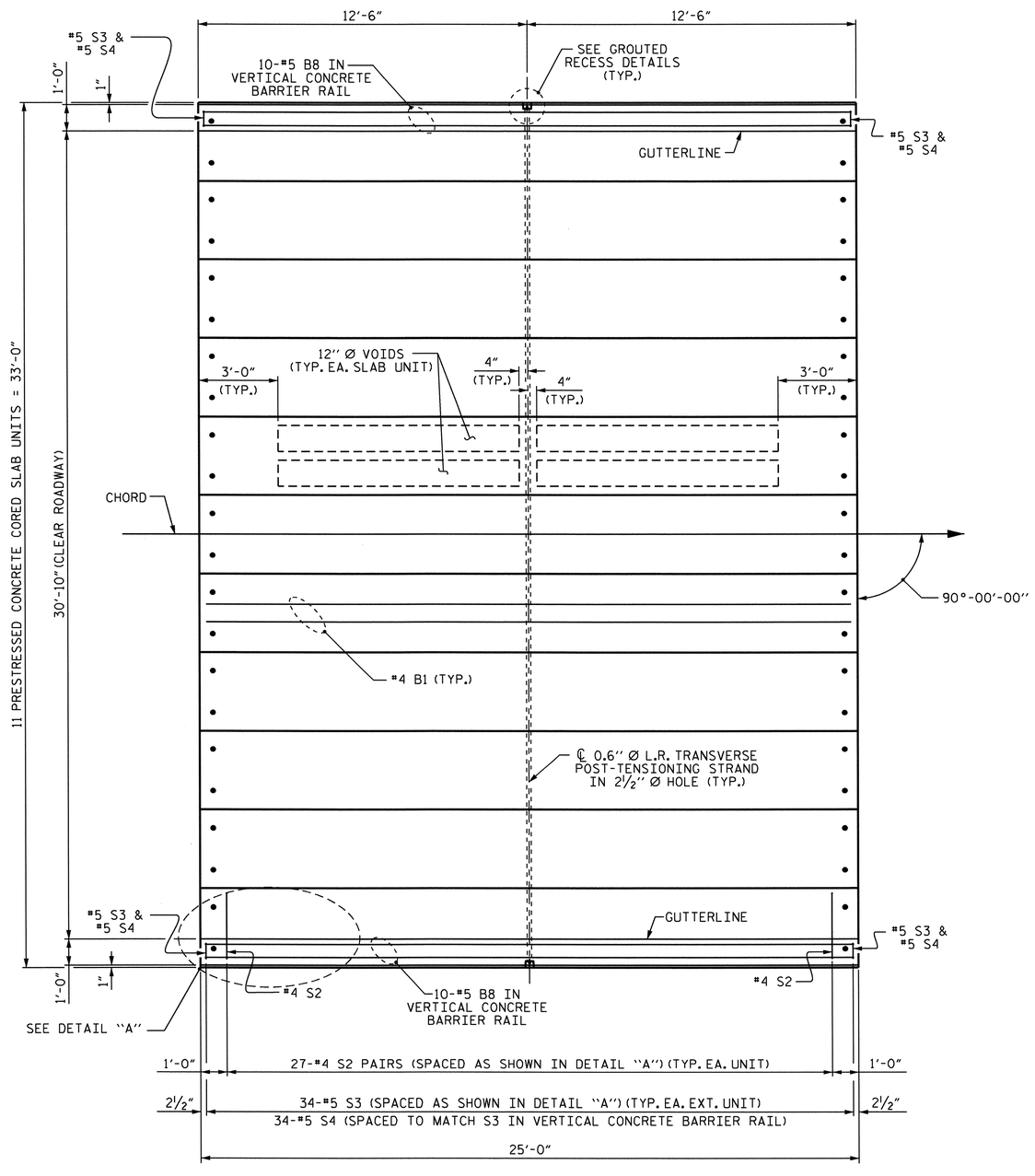

PLAN OF UNIT

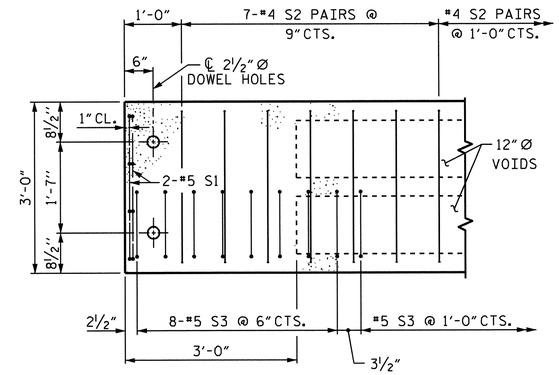

DETAIL "A"

NOTE: EXTERIOR UNIT SHOWN - INTERIOR UNIT SIMILAR EXCEPT OMIT #5 S3 BARS.

PROJECT NO. BD-5110K

UNION COUNTY

STATION: 12+75.50 -L-

SHEET 2 OF 3

STATE OF NORTH CAROLINA
DEPARTMENT OF TRANSPORTATION
RALEIGH

PLAN OF 25' UNIT 30'-10" CLEAR ROADWAY 90° SKEW SPAN A & C

REVISIONS						SHEET NO.
NO.	BY:	DATE:	NO.	BY:	DATE:	S-6
1			3			TOTAL SHEETS
2			4			21

NORTH CAROLINA PROFESSIONAL SEAL 23371 ENGINEER VIPUL A. PATEL
8/1/12

ASSEMBLED BY : H.T. DIEU		DATE : 7/26/12	
CHECKED BY : K. LAYNE		DATE : 7/30/12	
DRAWN BY : DGE 3/09	REV. 12/5/11	MAA/AAC	
CHECKED BY : BCH 3/09			

01-AUG-2012 14:54
R:\structures\Plans\Plans\BD-5110K_SD_CS.dgn
jpadams

STD. NO. 21" PCS_33_90S_25L

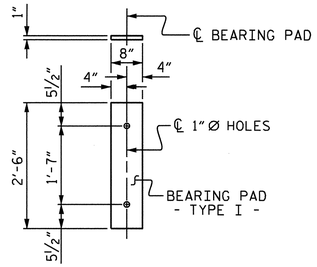

FIXED END
(TYPE I - 44 REQ'D)

ELASTOMERIC BEARING DETAILS

ELASTOMER IN ALL BEARINGS SHALL BE 60 DUROMETER HARDNESS.

GRADE 270 STRANDS	
	0.6"Ø L.R.
AREA (SQUARE INCHES)	0.217
ULTIMATE STRENGTH (LBS. PER STRAND)	58,600
APPLIED PRESTRESS (LBS. PER STRAND)	43,950

BAR TYPES

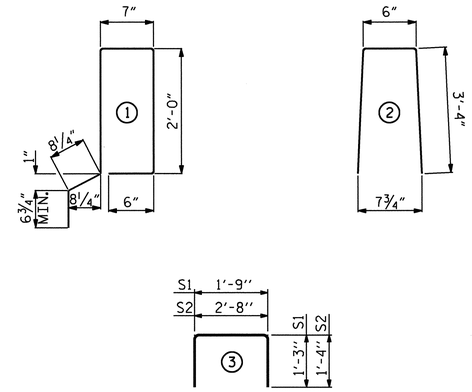

ALL BAR DIMENSIONS ARE OUT TO OUT

NOTES

ALL PRESTRESSING STRANDS SHALL BE 7-WIRE LOW RELAXATION GRADE 270 STRANDS AND SHALL CONFORM TO AASHTO M203 EXCEPT FOR SAMPLING REQUIREMENTS WHICH SHALL BE IN ACCORDANCE WITH THE STANDARD SPECIFICATIONS.

ALL REINFORCING STEEL CAST WITH THE CORED SLAB SECTIONS SHALL BE GRADE 60 AND SHALL BE INCLUDED IN THE UNIT PRICE BID FOR PRESTRESSED CONCRETE CORED SLABS.

RECESSES FOR TRANSVERSE STRANDS SHALL BE GROUTED AFTER THE TENSIONING OF THE STRANDS.

THE 2½"Ø DOWEL HOLES AT FIXED ENDS OF SLAB SECTIONS SHALL BE FILLED WITH NON-SHRINK GROUT.

THE BACKER RODS SHALL CONFORM TO THE REQUIREMENTS OF TYPE M BOND BREAKER. SEE SECTION 1028 OF THE STANDARD SPECIFICATIONS.

WHEN CORED SLABS ARE CAST, AN INTERNAL HOLD-DOWN SYSTEM SHALL BE EMPLOYED TO PREVENT VOIDS FROM RISING OR MOVING SIDEWAYS. AT LEAST SIX WEEKS PRIOR TO CASTING CORED SLABS, THE CONTRACTOR SHALL SUBMIT TO THE ENGINEER FOR REVIEW AND COMMENT, DETAILED DRAWINGS OF THE PROPOSED HOLD-DOWN SYSTEM. IN ADDITION TO STRUCTURAL DETAILS, LOCATION AND SPACING OF THE HOLD-DOWNS SHALL BE INDICATED.

ALL REINFORCING STEEL IN THE VERTICAL CONCRETE BARRIER RAIL SHALL BE EPOXY COATED.

PRESTRESSING STRANDS SHALL BE CUT FLUSH WITH THE CORED SLAB UNIT ENDS.

APPLY EPOXY PROTECTIVE COATING TO CORED SLAB UNIT ENDS.

GROOVED CONTRACTION JOINTS, ½" IN DEPTH, SHALL BE TOOLED IN ALL EXPOSED FACES OF THE BARRIER RAIL AND IN ACCORDANCE WITH ARTICLE 825-10(B) OF THE STANDARD SPECIFICATIONS. A CONTRACTION JOINT SHALL BE LOCATED AT EACH THIRD POINT BETWEEN BARRIER RAIL EXPANSION JOINTS. ONLY ONE CONTRACTION JOINT IS REQUIRED AT MIDPOINT OF BARRIER RAIL SEGMENTS LESS THAN 20 FEET IN LENGTH AND NO CONTRACTION JOINTS ARE REQUIRED FOR THOSE SEGMENTS LESS THAN 10 FEET IN LENGTH.

TRANSVERSE POST TENSIONING OF THE CORED SLAB UNITS SHALL BE DONE IN ACCORDANCE WITH THE STANDARD SPECIFICATIONS.

THE TRANSFER OF LOAD FROM THE ANCHORAGES TO THE CORED SLAB UNIT SHALL BE DONE WHEN THE CONCRETE HAS REACHED A COMPRESSIVE STRENGTH OF NOT LESS THAN THE REQUIRED STRENGTH SHOWN IN THE "CONCRETE RELEASE STRENGTH" TABLE.

FOR GROUT FOR STRUCTURES, SEE SPECIAL PROVISIONS.

CORED SLABS REQUIRED			
	NUMBER	LENGTH	TOTAL LENGTH
25' UNIT			
EXTERIOR C.S.	4	25'-0"	100'-0"
INTERIOR C.S.	18	25'-0"	450'-0"
TOTAL	22		550'-0"

DEAD LOAD DEFLECTION AND CAMBER	
	3'-0" x 1'-9"
25', 30' & 35' CORED SLAB UNIT	0.6"Ø L.R. STRAND
CAMBER (SLAB ALONE IN PLACE)	½" ↑
DEFLECTION DUE TO SUPERIMPOSED DEAD LOAD**	⅛" ↓
FINAL CAMBER	⅜" ↑

** INCLUDES FUTURE WEARING SURFACE

GUTTERLINE ASPHALT THICKNESS & RAIL HEIGHT		
30'-10" CLEAR ROADWAY	ASPHALT OVERLAY THICKNESS	RAIL HEIGHT
	@ MID-SPAN	@ MID-SPAN
	NORMAL CROWN SECTION	
25', 30' & 35' UNITS	2⅞"	3'-9⅝"
40' & 45' UNITS	2⅛"	3'-8⅞"
50' & 55' UNITS	1"	3'-7¾"

CONCRETE RELEASE STRENGTH	
UNIT	PSI
25', 30' & 35' UNITS	4000
40' & 45' UNITS	4000
50' & 55' UNITS	4900

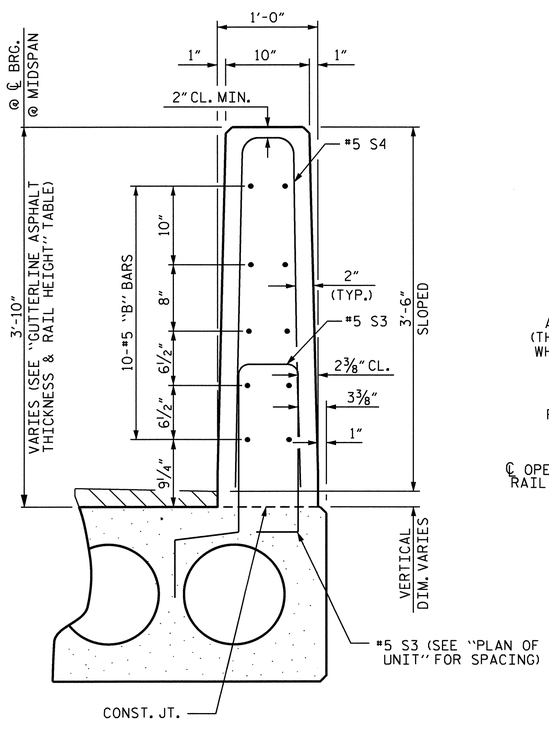

VERTICAL CONCRETE BARRIER RAIL SECTION

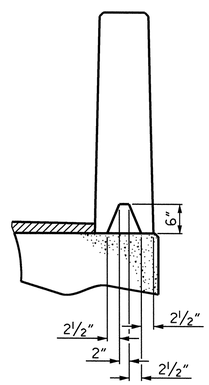

SECTION S-S
AT DAM IN OPEN JOINT
(THIS IS TO BE USED ONLY WHEN SLIP FORM IS USED)

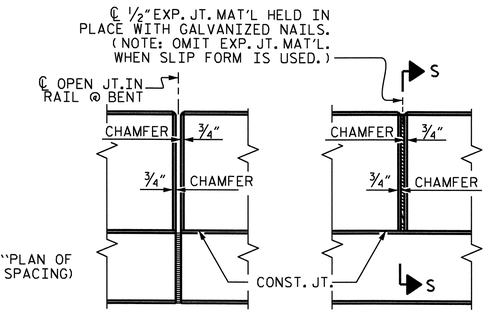

ELEVATION AT EXPANSION JOINTS

BILL OF MATERIAL FOR ONE 25' CORED SLAB UNIT							
				EXTERIOR UNIT		INTERIOR UNIT	
BAR	NUMBER	SIZE	TYPE	LENGTH	WEIGHT	LENGTH	WEIGHT
B1	2	#4	STR	24'-8"	33	24'-8"	33
S1	8	#5	3	4'-3"	35	4'-3"	35
S2	54	#4	3	5'-4"	192	5'-4"	192
* S3	34	#5	1	6'-4"	225		
REINFORCING STEEL			LBS.		260		260
* EPOXY COATED REINFORCING STEEL			LBS.		225		
5000 P.S.I. CONCRETE			CU. YDS.		3.7		3.7
0.6"Ø L.R. STRANDS			No.		9		9

BILL OF MATERIAL FOR VERTICAL CONCRETE BARRIER RAIL						
BAR	BARS PER PAIR OF EXTERIOR UNITS	TOTAL NO.	SIZE	TYPE	LENGTH	WEIGHT
	25' UNIT					
* B8	20	40	#5	STR	24'-7"	1026
* S4	68	136	#5	2	7'-2"	1016
* EPOXY COATED REINFORCING STEEL				LBS.		2042
CLASS AA CONCRETE				CU.YDS.		13.2
TOTAL VERTICAL CONCRETE BARRIER RAIL				LN. FT.		100.5

NORTH CAROLINA PROFESSIONAL SEAL 23371 ENGINEER PAUL A. PATEL
8/1/12

PROJECT NO. BD-5110K
UNION COUNTY
STATION: 12+75.50 -L-

SHEET 3 OF 3

STATE OF NORTH CAROLINA
DEPARTMENT OF TRANSPORTATION
RALEIGH

STANDARD
3'-0" X 1'-9"
PRESTRESSED CONCRETE
CORED SLAB UNIT
90° SKEW

REVISIONS						SHEET NO.
NO.	BY:	DATE:	NO.	BY:	DATE:	S-7
1			3			TOTAL SHEETS
2			4			21

ASSEMBLED BY :	H.T. DIEU	DATE :	7/26/12
CHECKED BY :	K. LAYNE	DATE :	7/30/12
DRAWN BY :	DGE 5/09	REV. 12/11	MAA/AAC
CHECKED BY :	BCH 6/09		

01-AUG-2012 14:54
R:\structures\Plans\Plans\BD-5110K_SD_CS.dgn
jpadams

STD. NO. 21" PCS3_33_90S

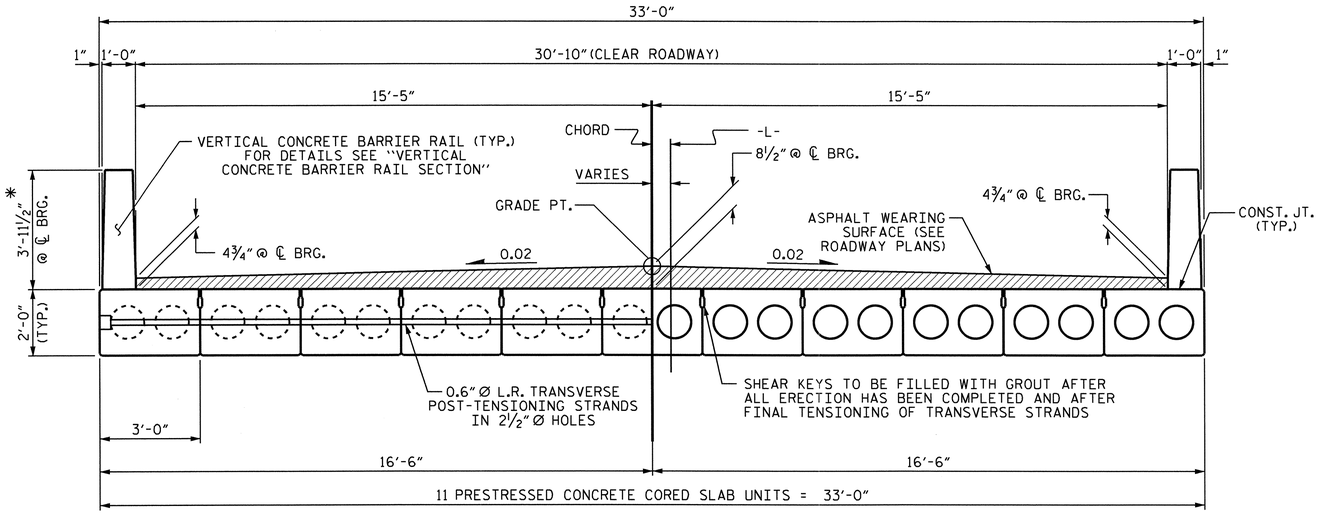

HALF SECTION
AT INTERMEDIATE DIAPHRAGMS

TYPICAL SECTION

HALF SECTION
THROUGH VOIDS

* - THE MAXIMUM BARRIER RAIL HEIGHT AND ASPHALT THICKNESS IS SHOWN. THE HEIGHT OF THE BARRIER RAIL AND ASPHALT THICKNESS VARIES WHILE THE TOP OF THE BARRIER RAIL FOLLOWS THE PROFILE OF THE GUTTERLINE. FOR RAIL HEIGHT DETAILS AND ASPHALT THICKNESS, SEE THE "VERTICAL CONCRETE BARRIER RAIL SECTION" DETAIL.

FIXED END

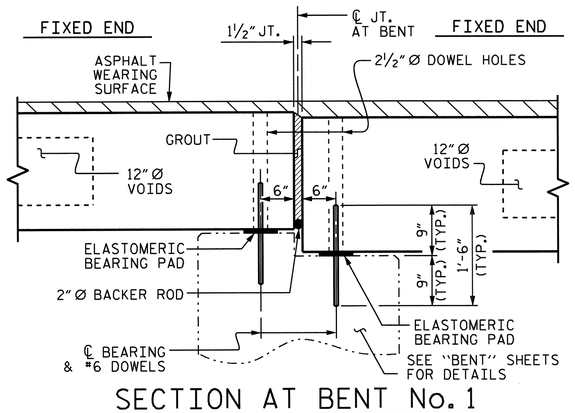

SECTION AT BENT No. 1

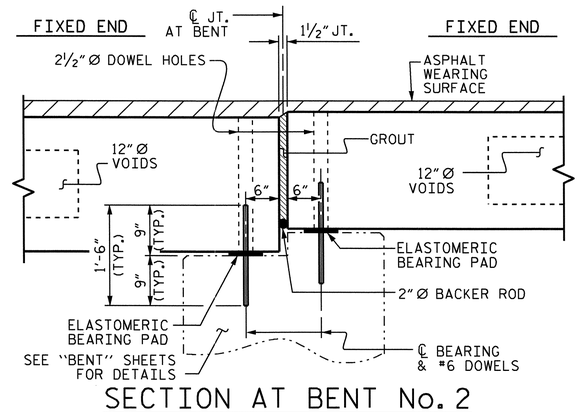

SECTION AT BENT No. 2

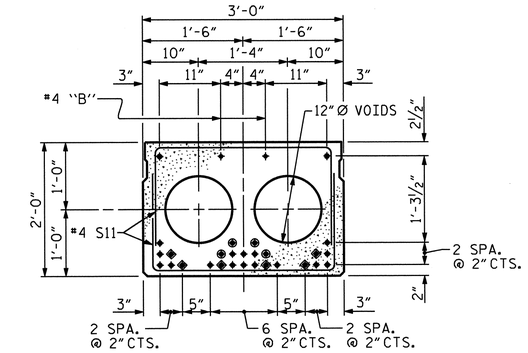

INTERIOR SLAB SECTION (60' & 65' UNIT)

(24 STRANDS REQUIRED)

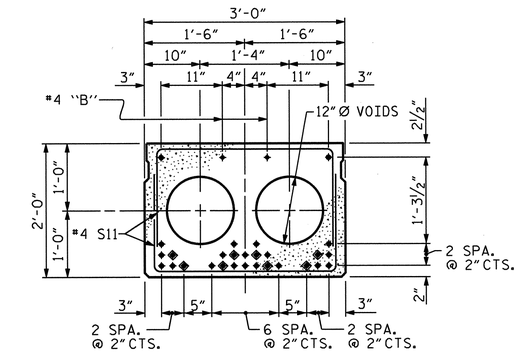

INTERIOR SLAB SECTION (70' UNIT)

(28 STRANDS REQUIRED)

0.6" Ø LOW RELAXATION STRAND LAYOUT

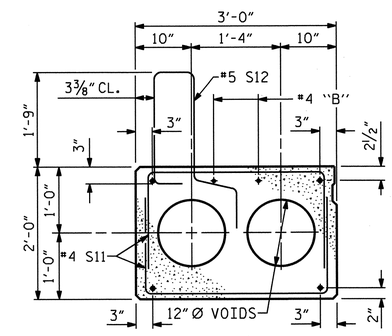

EXTERIOR SLAB SECTION

(FOR PRESTRESSED STRAND LAYOUT, SEE INTERIOR SLAB SECTION.)

◆ BOND SHALL BE BROKEN ON THESE STRANDS FOR A DISTANCE OF 12'-0" FROM END OF CORED SLAB UNIT. SEE STANDARD SPECIFICATIONS, ARTICLE 1078-7.

◉ OPTIONAL FULL LENGTH DEBONDED STRANDS. THESE STRANDS ARE NOT REQUIRED. IF THE FABRICATOR CHOOSES TO INCLUDE THESE STRANDS IN THE CORED SLAB UNIT, THE STRANDS SHALL BE DEBONDED FOR THE FULL LENGTH OF THE UNIT AT NO ADDITIONAL COST. SEE STANDARD SPECIFICATIONS, ARTICLE 1078-7.

DEBONDING LEGEND

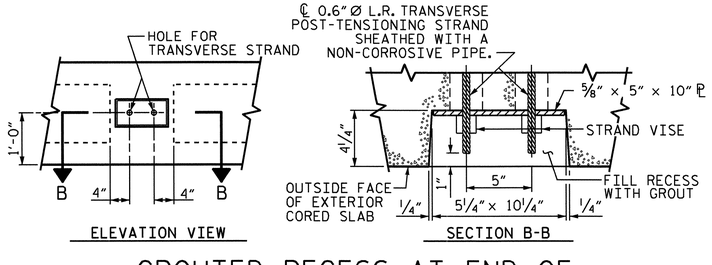

GROUTED RECESS AT END OF POST-TENSIONED STRAND-CORED SLABS

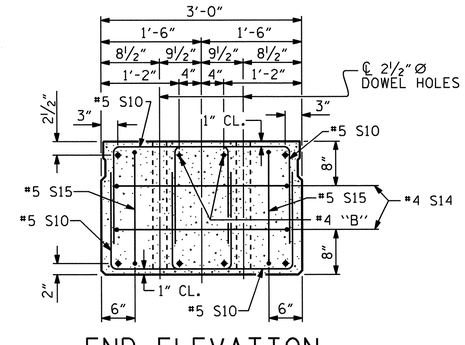

END ELEVATION

SHOWING PLACEMENT OF DOUBLE STIRRUPS AND LOCATION OF DOWEL HOLES. (STRAND LAYOUT NOT SHOWN.) INTERIOR SLAB UNIT SHOWN-EXTERIOR SLAB UNIT SIMILAR EXCEPT SHEAR KEY LOCATION.

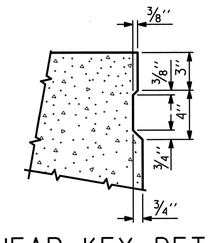

SHEAR KEY DETAIL

NOTE: OMIT SHEAR KEY ON OUTSIDE FACE OF EXTERIOR CORED SLABS.

PROJECT NO. BD-5110K
UNION COUNTY
STATION: 12+75.50 -L-

SHEET 1 OF 3

STATE OF NORTH CAROLINA
DEPARTMENT OF TRANSPORTATION
RALEIGH

STANDARD

3'-0" X 2'-0"
PRESTRESSED CONCRETE
CORED SLAB UNIT

NORTH CAROLINA PROFESSIONAL SEAL 23371 ENGINEER VIPUL A. PATEL
8/1/12

REVISIONS						SHEET NO.
NO.	BY:	DATE:	NO.	BY:	DATE:	S-8
1			3			TOTAL SHEETS
2			4			21

ASSEMBLED BY :	H.T. DIEU	DATE :	7/26/12
CHECKED BY :	K. LAYNE	DATE :	7/30/12
DRAWN BY : MAA	6/10	REV. 12/11	MAA/AAC
CHECKED BY : MKT	7/10		

01-AUG-2012 14:54
R:\structures\Plans\Plans\BD-5110K_SD_CS.dgn
jpadams

STD. NO. 24PCS4_33_90S

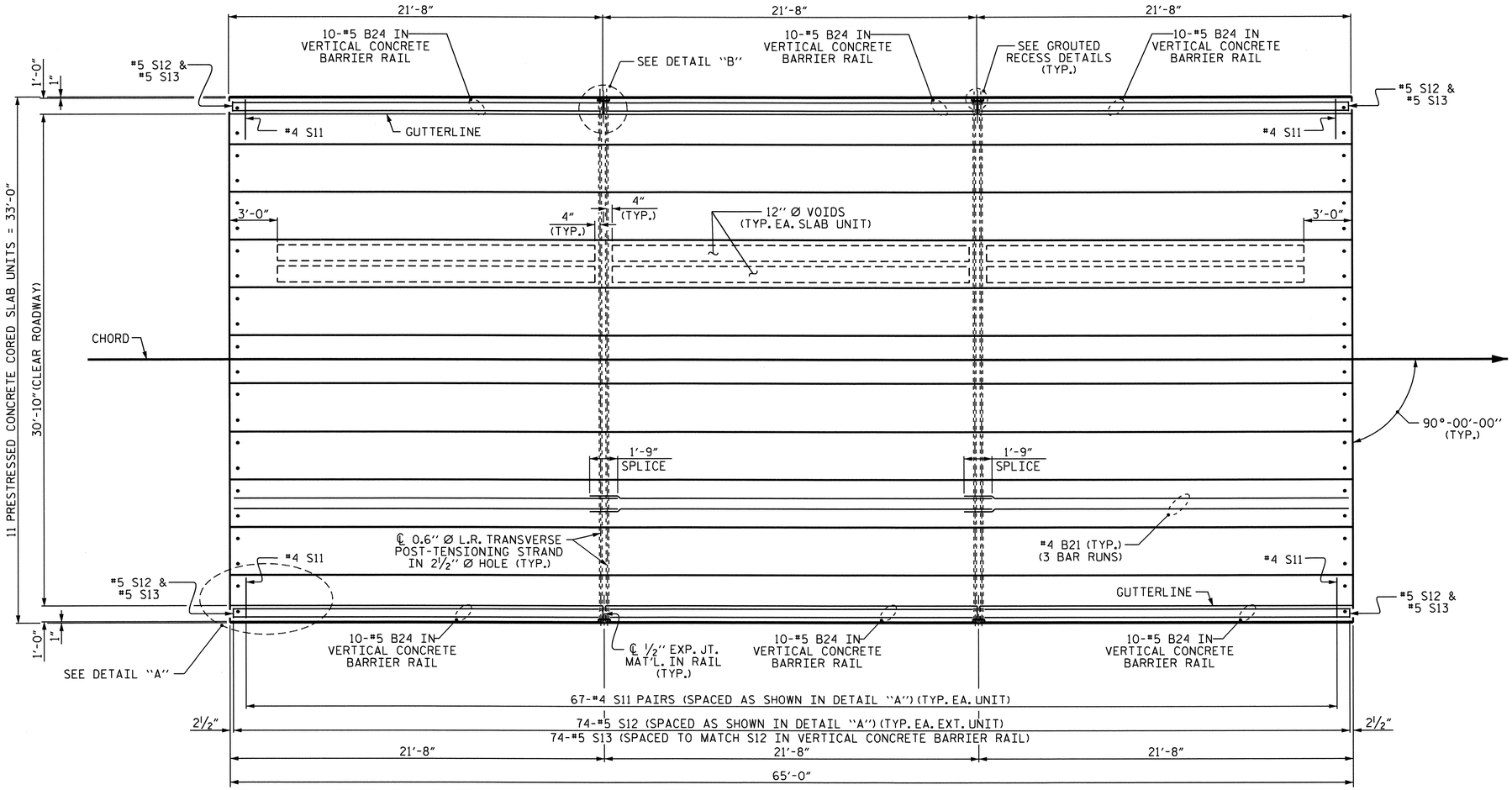

PLAN OF UNIT

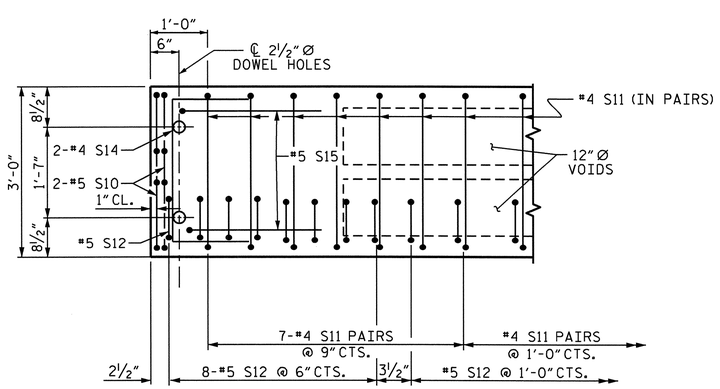

DETAIL "A"

NOTE: EXTERIOR UNIT SHOWN - INTERIOR UNIT SIMILAR EXCEPT OMIT #5 S12 BARS.

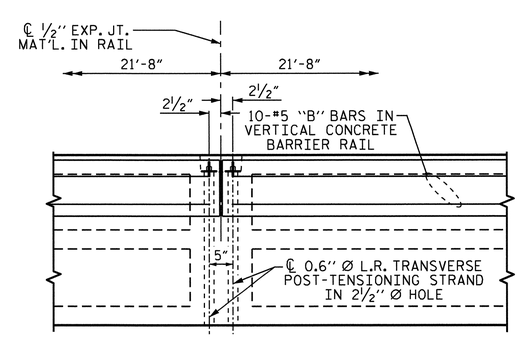

DETAIL "B"

#4 S11 BARS MAY BE SHIFTED AS NECESSARY TO MAINTAIN 1" CLEAR TO GROUTED RECESS AND 2½" Ø TRANSVERSE POST-TENSIONING STRAND HOLES

PROJECT NO. BD-5110K
UNION COUNTY
STATION: 12+75.50 -L-

SHEET 2 OF 3

STATE OF NORTH CAROLINA
DEPARTMENT OF TRANSPORTATION
RALEIGH

PLAN OF 65' UNIT
30'-10" CLEAR ROADWAY
90° SKEW
SPAN B

NORTH CAROLINA PROFESSIONAL SEAL 23371 ENGINEER VIPUL A. PATEL
8/1/12

REVISIONS							SHEET NO.
NO.	BY:	DATE:	NO.	BY:	DATE:		S-9
1			3				TOTAL SHEETS
2			4				21

ASSEMBLED BY :	H.T. DIEU	DATE :	7/26/12
CHECKED BY :	K. LAYNE	DATE :	7/30/12
DRAWN BY : MAA	6/10	REV. 12/5/11	MAA/AAC
CHECKED BY : MKT	7/10		

01-AUG-2012 14:54
R:\structures\Plans\Plans\BD-5110K_SD_CS.dgn
jpadams

STD. NO. 24PCS_33_90S_65L

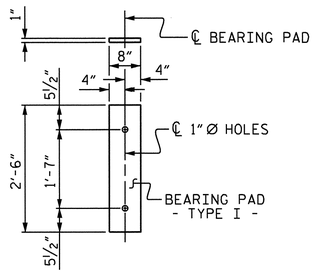

FIXED END
(TYPE I - 22 REQ'D)

ELASTOMERIC BEARING DETAILS

ELASTOMER IN ALL BEARINGS SHALL BE 60 DUROMETER HARDNESS.

GRADE 270 STRANDS	
	0.6"Ø L.R.
AREA (SQUARE INCHES)	0.217
ULTIMATE STRENGTH (LBS. PER STRAND)	58,600
APPLIED PRESTRESS (LBS. PER STRAND)	43,950

BAR TYPES

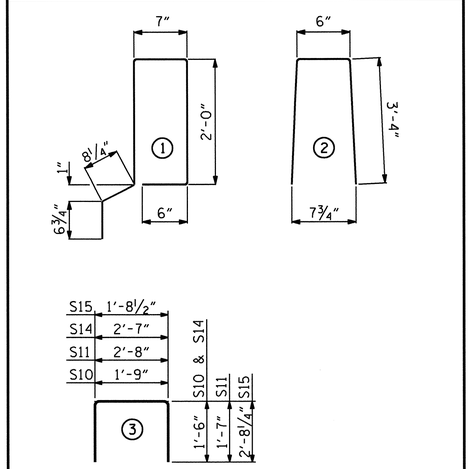

ALL BAR DIMENSIONS ARE OUT TO OUT

NOTES

ALL PRESTRESSING STRANDS SHALL BE 7-WIRE LOW RELAXATION GRADE 270 STRANDS AND SHALL CONFORM TO AASHTO M203 EXCEPT FOR SAMPLING REQUIREMENTS WHICH SHALL BE IN ACCORDANCE WITH THE STANDARD SPECIFICATIONS.

ALL REINFORCING STEEL CAST WITH THE CORED SLAB SECTIONS SHALL BE GRADE 60 AND SHALL BE INCLUDED IN THE UNIT PRICE BID FOR PRESTRESSED CONCRETE CORED SLABS.

RECESSES FOR TRANSVERSE STRANDS SHALL BE GROUTED AFTER THE TENSIONING OF THE STRANDS.

THE 2½"Ø DOWEL HOLES AT FIXED ENDS OF SLAB SECTIONS SHALL BE FILLED WITH NON-SHRINK GROUT.

THE BACKER RODS SHALL CONFORM TO THE REQUIREMENTS OF TYPE M BOND BREAKER. SEE SECTION 1028 OF THE STANDARD SPECIFICATIONS.

WHEN CORED SLABS ARE CAST, AN INTERNAL HOLD-DOWN SYSTEM SHALL BE EMPLOYED TO PREVENT VOIDS FROM RISING OR MOVING SIDEWAYS. AT LEAST SIX WEEKS PRIOR TO CASTING CORED SLABS, THE CONTRACTOR SHALL SUBMIT TO THE ENGINEER FOR REVIEW AND COMMENT, DETAILED DRAWINGS OF THE PROPOSED HOLD-DOWN SYSTEM. IN ADDITION TO STRUCTURAL DETAILS, LOCATION AND SPACING OF THE HOLD-DOWNS SHALL BE INDICATED.

THE TRANSFER OF LOAD FROM THE ANCHORAGES TO THE CORED SLAB UNIT SHALL BE DONE WHEN THE CONCRETE HAS REACHED A COMPRESSIVE STRENGTH OF NOT LESS THAN THE REQUIRED STRENGTH SHOWN IN THE "CONCRETE RELEASE STRENGTH" TABLE.

ALL REINFORCING STEEL IN VERTICAL CONCRETE BARRIER RAILS SHALL BE EPOXY COATED.

PRESTRESSING STRANDS SHALL BE CUT FLUSH WITH THE CORED SLAB UNIT ENDS.

APPLY EPOXY PROTECTIVE COATING TO CORED SLAB UNIT ENDS.

GROOVED CONTRACTION JOINTS, ½" IN DEPTH, SHALL BE TOOLED IN ALL EXPOSED FACES OF THE BARRIER RAIL AND IN ACCORDANCE WITH ARTICLE 825-10(B) OF THE STANDARD SPECIFICATIONS. A CONTRACTION JOINT SHALL BE LOCATED AT EACH THIRD POINT BETWEEN BARRIER RAIL EXPANSION JOINTS. ONLY ONE CONTRACTION JOINT IS REQUIRED AT MIDPOINT OF BARRIER RAIL SEGMENTS LESS THAN 20 FEET IN LENGTH AND NO CONTRACTION JOINTS ARE REQUIRED FOR THOSE SEGMENTS LESS THAN 10 FEET IN LENGTH.

TRANSVERSE POST TENSIONING OF THE CORED SLAB UNITS SHALL BE DONE IN ACCORDANCE WITH THE STANDARD SPECIFICATIONS.

MAINTAIN A SYMMETRIC TENSION FORCE BETWEEN EACH PAIR OF TRANSVERSE POST TENSIONING STRANDS IN THE DIAPHRAGM.

THE #4 S11 STIRRUPS MAY BE SHIFTED AS NECESSARY TO MAINTAIN 1" CLEAR TO THE GROUTED RECESS.

FOR GROUT FOR STRUCTURES, SEE SPECIAL PROVISIONS.

CORED SLABS REQUIRED			
	NUMBER	LENGTH	TOTAL LENGTH
65' UNIT			
EXTERIOR C.S.	2	65'-0"	130'-0"
INTERIOR C.S.	9	65'-0"	585'-0"
TOTAL	11		715'-0"

DEAD LOAD DEFLECTION AND CAMBER	
	3'-0" x 2'-0"
60' & 65' CORED SLAB UNIT	0.6"Ø L.R. STRAND
CAMBER (SLAB ALONE IN PLACE)	3⅜" ↑
DEFLECTION DUE TO SUPERIMPOSED DEAD LOAD**	½" ↓
FINAL CAMBER	2⅞" ↑

** INCLUDES FUTURE WEARING SURFACE

GUTTERLINE ASPHALT THICKNESS & RAIL HEIGHT		
	ASPHALT OVERLAY THICKNESS @ MID-SPAN	RAIL HEIGHT @ MID-SPAN
60' UNITS	1⅞"	3'-8⅝"
65' UNITS	1⅞"	3'-8⅝"
70' UNITS	1¼"	3'-8"

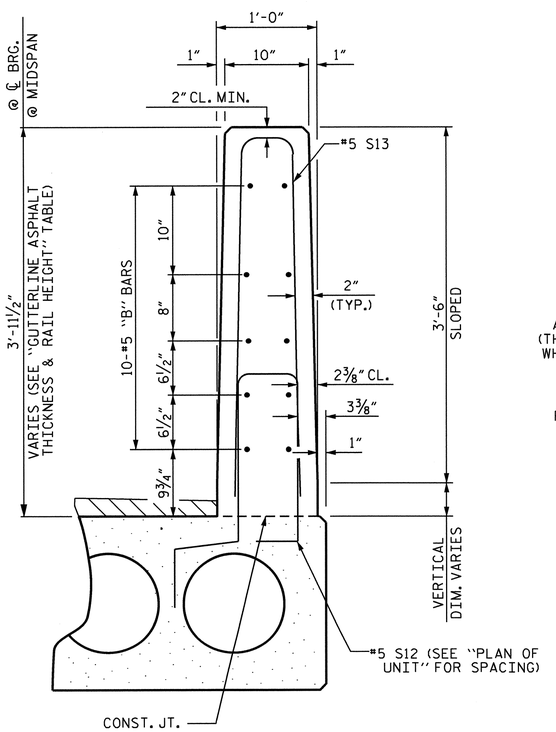

SECTION THRU RAIL

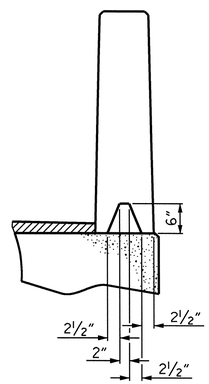

SECTION S-S
AT DAM IN OPEN JOINT
(THIS IS TO BE USED ONLY WHEN SLIP FORM IS USED)

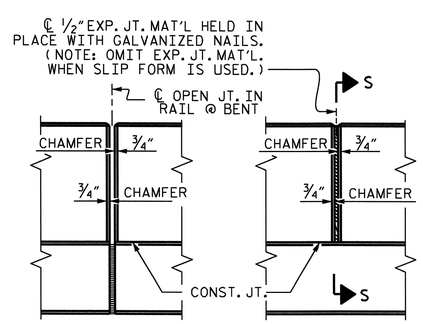

ELEVATION AT EXPANSION JOINTS

VERTICAL CONCRETE BARRIER RAIL DETAILS

BILL OF MATERIAL FOR ONE 65' CORED SLAB UNIT							
				EXTERIOR UNIT		INTERIOR UNIT	
BAR	NUMBER	SIZE	TYPE	LENGTH	WEIGHT	LENGTH	WEIGHT
B21	6	#4	STR	22'-10"	92	22'-10"	92
S10	8	#5	3	4'-9"	40	4'-9"	40
S11	134	#4	3	5'-10"	522	5'-10"	522
*S12	74	#5	1	6'-4"	489		
S14	4	#4	3	5'-7"	15	5'-7"	15
S15	4	#5	3	7'-1"	30	7'-1"	30
REINFORCING STEEL			LBS.		699		699
*EPOXY COATED REINFORCING STEEL			LBS.		489		
6000 P.S.I. CONCRETE			CU. YDS.		11.0		11.0
0.6"Ø L.R. STRANDS			No.		24		24

BILL OF MATERIAL FOR VERTICAL CONCRETE BARRIER RAIL						
BAR	BARS PER PAIR OF EXTERIOR UNITS	TOTAL NO.	SIZE	TYPE	LENGTH	WEIGHT
	65' UNIT					
*B24	60	60	#5	STR	21'-3"	1330
*S13	148	148	#5	2	7'-2"	1106
*EPOXY COATED REINFORCING STEEL				LBS.		2436
CLASS AA CONCRETE				CU.YDS.		17.6
TOTAL VERTICAL CONCRETE BARRIER RAIL				LN. FT.		130.25

CONCRETE RELEASE STRENGTH	
UNIT	PSI
60' & 65' UNITS	4800
70' UNITS	5500

PROJECT NO. BD-5110K
UNION COUNTY
STATION: 12+75.50 -L-

SHEET 3 OF 3

NORTH CAROLINA PROFESSIONAL SEAL 023371 ENGINEER VIPUL A. PATEL

8/1/12

STATE OF NORTH CAROLINA
DEPARTMENT OF TRANSPORTATION
RALEIGH

STANDARD
3'-0" X 2'-0"
PRESTRESSED CONCRETE
CORED SLAB UNIT

REVISIONS						SHEET NO.
NO.	BY:	DATE:	NO.	BY:	DATE:	S-10
1			3			TOTAL SHEETS
2			4			21

ASSEMBLED BY :	H.T. DIEU	DATE :	7/26/12
CHECKED BY :	K. LAYNE	DATE :	7/30/12
DRAWN BY : MAA	6/10	REV. 12/11	MAA/AAC
CHECKED BY : MKT	7/10		

01-AUG-2012 14:54
R:\structures\Plans\Plans\BD-5110K_SD_CS.dgn
jpadams

STD. NO. 24PCS3_33_90S

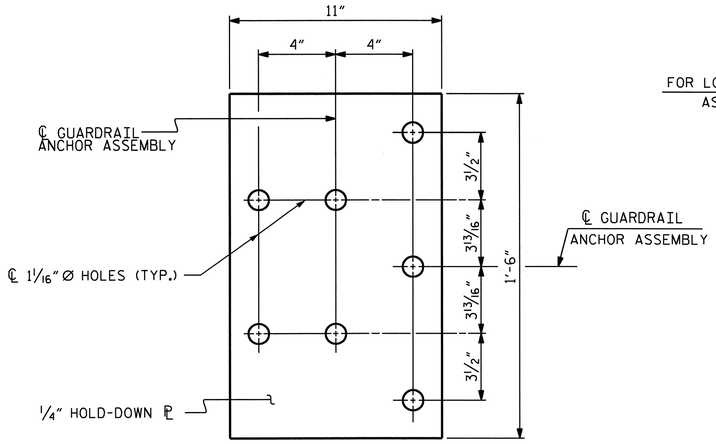

PLAN

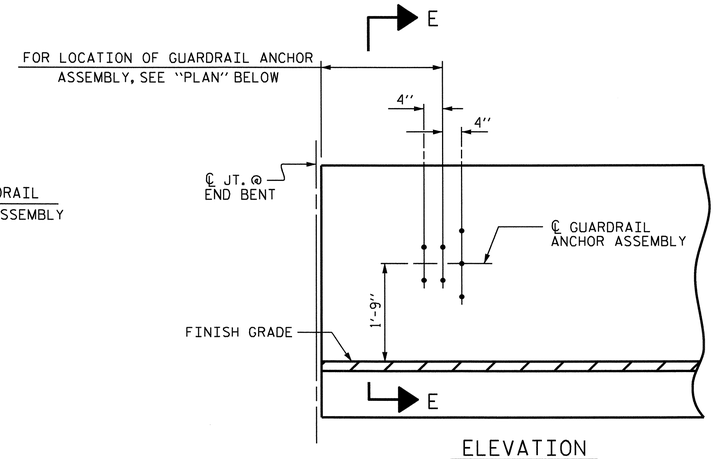

ELEVATION

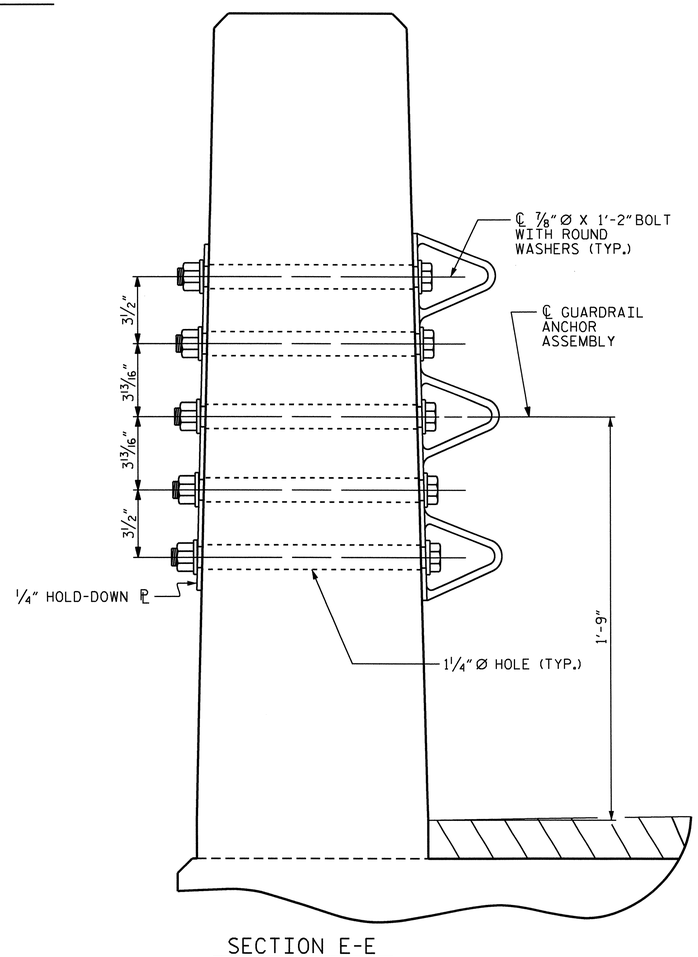

SECTION E-E

GUARDRAIL ANCHOR ASSEMBLY DETAILS

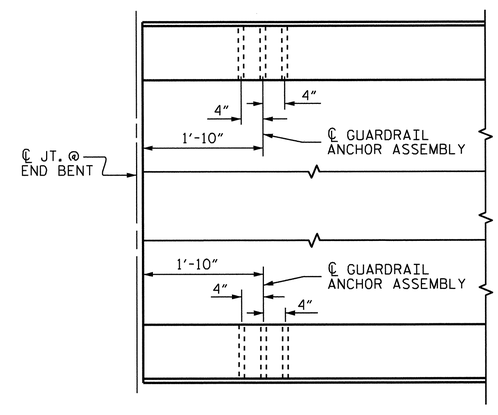

PLAN

LOCATION OF ANCHORS FOR GUARDRAIL

END BENT #1 SHOWN, END BENT #2 SIMILAR.

NOTES

THE GUARDRAIL ANCHOR ASSEMBLY SHALL CONSIST OF A 1/4" HOLD DOWN PLATE AND 7 - 7/8" Ø BOLTS WITH NUTS AND WASHERS.

THE HOLD-DOWN PLATE SHALL CONFORM TO AASHTO M270 GRADE 36. AFTER FABRICATION, THE HOLD-DOWN PLATE SHALL BE HOT-DIP GALVANIZED IN ACCORDANCE WITH AASHTO M111.

BOLTS SHALL CONFORM TO THE REQUIREMENTS OF ASTM A307 AND NUTS SHALL CONFORM TO THE REQUIREMENTS OF AASHTO M291. BOLTS, NUTS AND WASHERS SHALL BE GALVANIZED. (AT THE CONTRACTOR'S OPTION, STAINLESS STEEL BOLTS, NUTS AND WASHERS MAY BE USED AS AN ALTERNATE FOR THE 7/8" Ø GALVANIZED BOLTS, NUTS AND WASHERS. THEY SHALL CONFORM TO OR EXCEED THE MECHANICAL REQUIREMENTS OF ASTM A307. THE USE OF THIS ALTERNATE SHALL BE APPROVED BY THE ENGINEER.)

THE GUARDRAIL ANCHOR ASSEMBLY IS REQUIRED AT ALL POINTS WHERE APPROACH GUARDRAIL IS TO BE ATTACHED TO THE END OF BARRIER RAIL. FOR POINTS OF ATTACHMENT, SEE SKETCH.

AFTER INSTALLATION, THE EXPOSED THREAD OF THE BOLT SHALL BE BURRED WITH A SHARP POINTED TOOL.

THE COST OF THE GUARDRAIL ANCHOR ASSEMBLY SHALL BE INCLUDED IN THE UNIT CONTRACT PRICE BID FOR VERTICAL CONCRETE BARRIER RAIL.

THE VERTICAL REINFORCING BARS MAY BE SHIFTED SLIGHTLY IN THE VERTICAL CONCRETE BARRIER RAIL TO CLEAR ASSEMBLY BOLTS.

THE 1 1/4" Ø HOLES SHALL BE FORMED OR DRILLED WITH A CORE BIT. IMPACT TOOLS WILL NOT BE PERMITTED. ANY CONCRETE DAMAGED BY THIS WORK SHALL BE REPAIRED TO THE SATISFACTION OF THE ENGINEER.

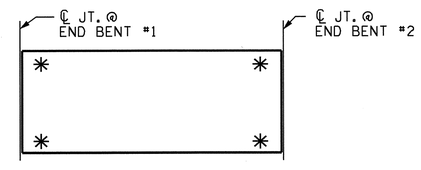

SKETCH SHOWING POINTS OF ATTACHMENT

✳ DENOTES GUARDRAIL ANCHOR ASSEMBLY

PROJECT NO. BD-5110K
UNION COUNTY
STATION: 12+75.50 -L-

STATE OF NORTH CAROLINA
DEPARTMENT OF TRANSPORTATION
RALEIGH

STANDARD
GUARDRAIL ANCHORAGE FOR VERTICAL CONCRETE BARRIER RAIL

NORTH CAROLINA PROFESSIONAL SEAL 23371 ENGINEER VIRAL A. PATEL
Viral A. Patel
8/1/12

REVISIONS						SHEET NO.
NO.	BY:	DATE:	NO.	BY:	DATE:	S-11
1			3			TOTAL SHEETS
2			4			21

ASSEMBLED BY : H.T. DIEU	DATE : 7/26/12
CHECKED BY : K. LAYNE	DATE : 7/30/12
DRAWN BY : MAA 5/10	ADDED 5/6/10
CHECKED BY : GM 5/10	REV. 10/1/11 MAA/GM
	REV. 12/5/11 MAA/GM

01-AUG-2012 14:54
R:\structures\Plans\Plans\BD-5110K_SD_CS.dgn
jpadams

(SHT 1) STD. NO. GRA3

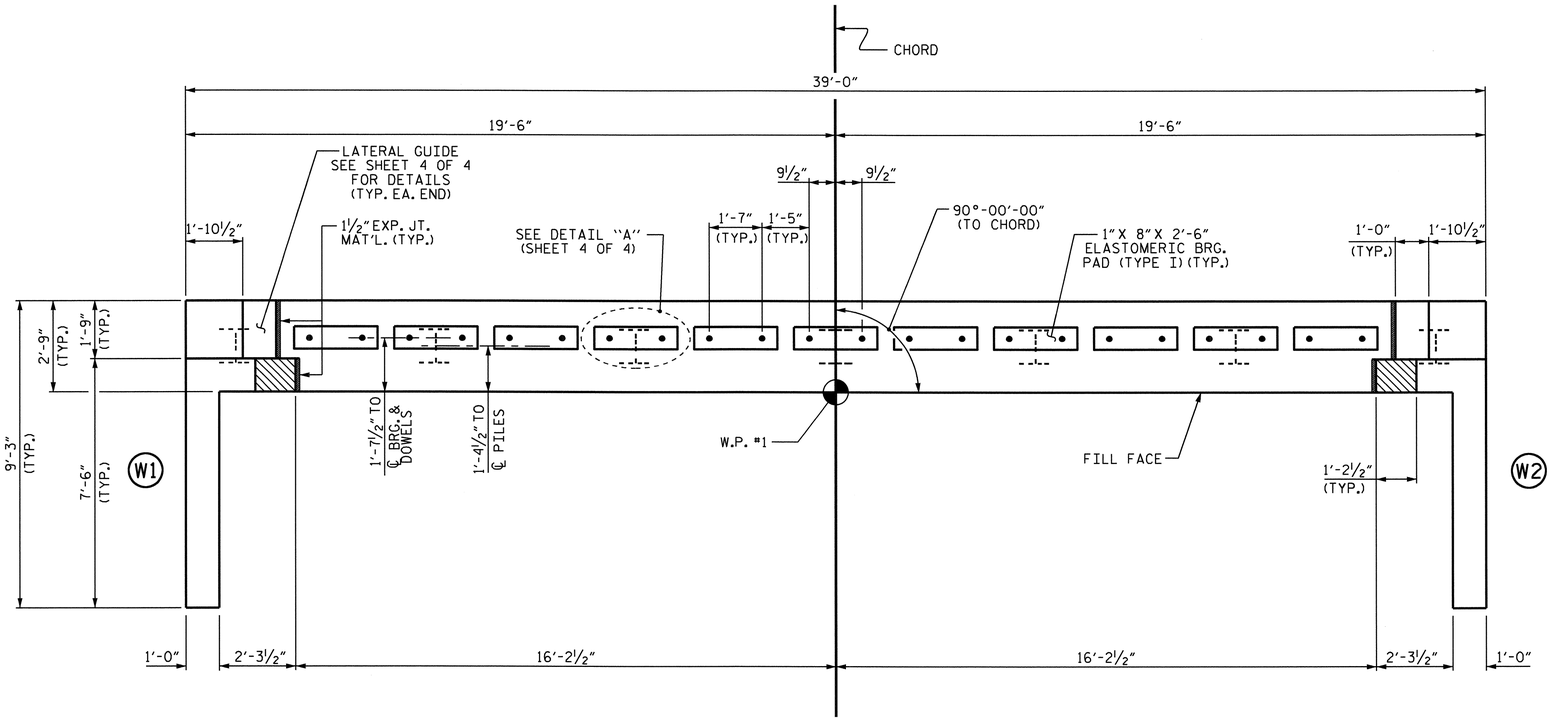

PLAN

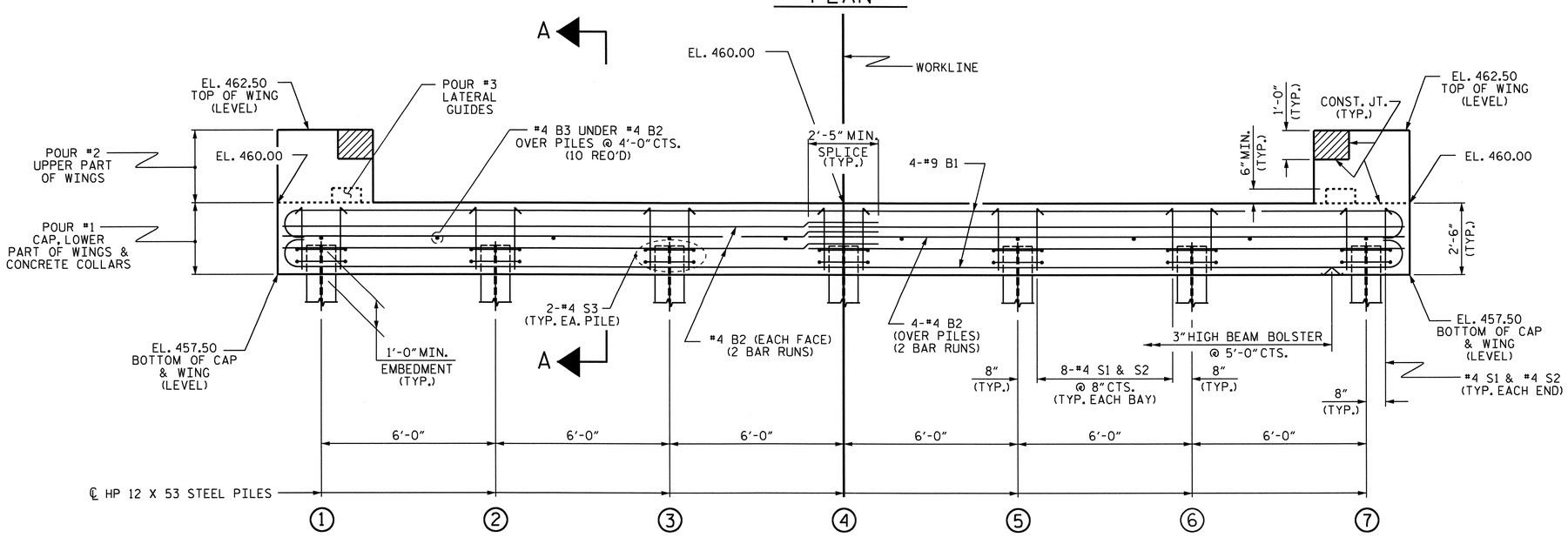

ELEVATION

WINGS NOT SHOWN FOR CLARITY.
FOR SECTION A-A, SEE SHEET 4 OF 4.
CONCRETE COLLARS FOR STEEL PILES NOT SHOWN IN PLAN AND ELEVATION VIEWS FOR CLARITY.
SEE "CORROSION PROTECTION FOR STEEL PILES DETAIL", SHEET 4 OF 4.

NOTES

STIRRUPS IN CAP MAY BE SHIFTED AS NECESSARY TO CLEAR DOWELS.

THE LATERAL GUIDES ARE NOT TO BE POURED UNTIL AFTER THE CORED SLAB UNITS ARE IN PLACE.

THE CONCRETE IN THE SHADED AREA OF THE WING SHALL BE POURED AFTER THE VERTICAL CONCRETE BARRIER RAIL IS CAST IF SLIP FORMING IS USED.

FOR PILE SPLICE DETAILS, SEE SHEET 4 OF 4.

FOR WING DETAILS, SEE SHEET 3 OF 4.

THE CONTRACTOR HAS THE OPTION TO OMIT THE LATERAL GUIDE IF APPROVED BY THE ENGINEER.

PROJECT NO. BD-5110K
UNION COUNTY
STATION: 12+75.50 -L-

SHEET 1 OF 4

STATE OF NORTH CAROLINA
DEPARTMENT OF TRANSPORTATION
RALEIGH

SUBSTRUCTURE

END BENT No. 1

NORTH CAROLINA PROFESSIONAL SEAL 23371 ENGINEER VIPUL A. PATEL
8/1/12

ASSEMBLED BY :	H.T. DIEU	DATE : 7/26/12
CHECKED BY :	K. LAYNE	DATE : 7/30/12
DRAWN BY : DGE	02/10	
CHECKED BY : MKT	02/10	

REVISIONS						SHEET NO.
NO.	BY:	DATE:	NO.	BY:	DATE:	S-12
1			3			TOTAL SHEETS
2			4			21

01-AUG-2012 14:54
R:\structures\Plans\Plans\BD-5110K_SD_E*.dgn
jpadams

STD. NO. EB_33_90S

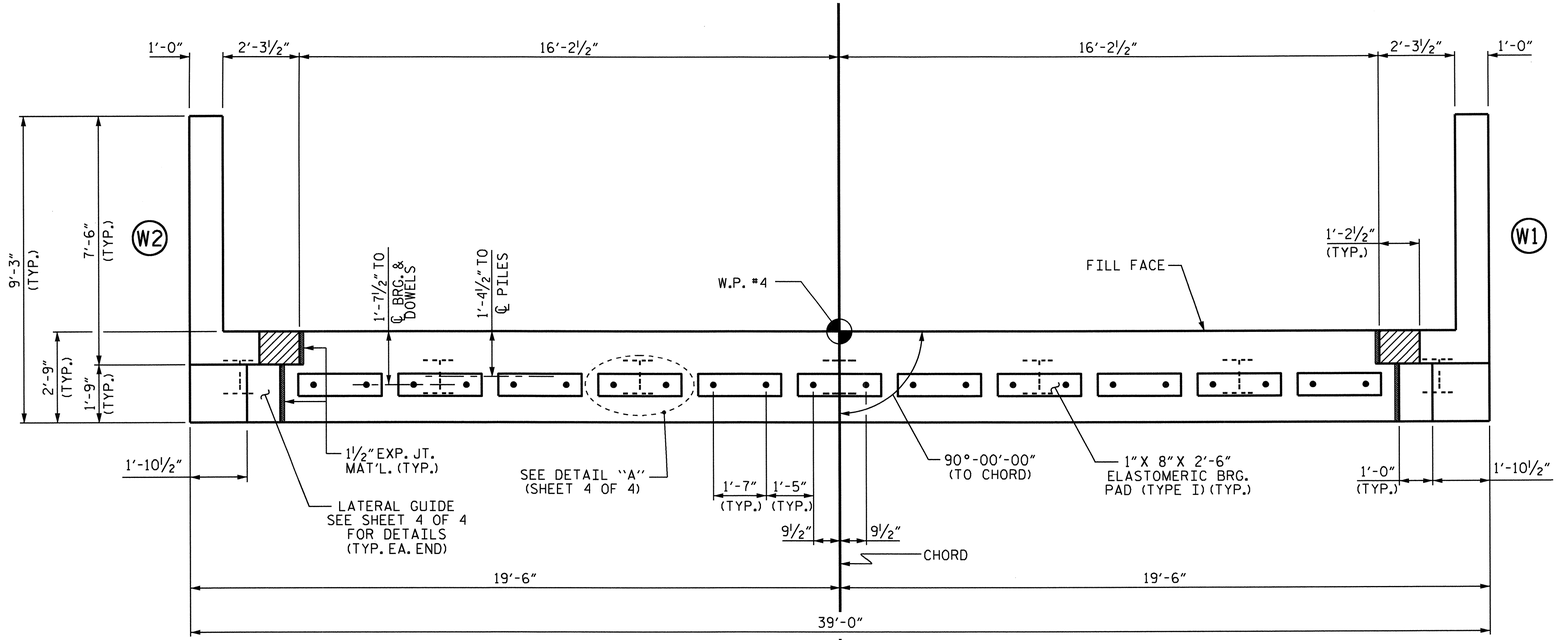

PLAN

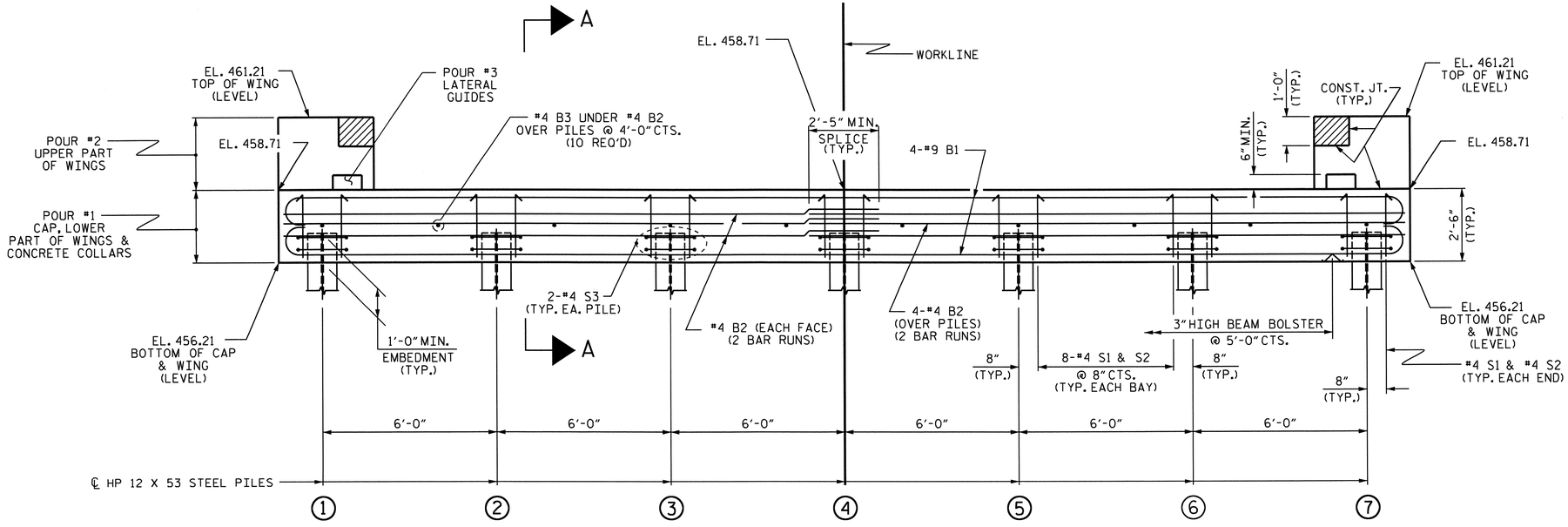

ELEVATION

WINGS NOT SHOWN FOR CLARITY.
FOR SECTION A-A, SEE SHEET 4 OF 4.
CONCRETE COLLARS FOR STEEL PILES NOT SHOWN IN PLAN AND ELEVATION VIEWS FOR CLARITY.
SEE "CORROSION PROTECTION FOR STEEL PILES DETAIL", SHEET 4 OF 4.

NOTES

STIRRUPS IN CAP MAY BE SHIFTED AS NECESSARY TO CLEAR DOWELS.

THE LATERAL GUIDES ARE NOT TO BE POURED UNTIL AFTER THE CORED SLAB UNITS ARE IN PLACE.

THE CONCRETE IN THE SHADED AREA OF THE WING SHALL BE POURED AFTER THE VERTICAL CONCRETE BARRIER RAIL IS CAST IF SLIP FORMING IS USED.

FOR PILE SPLICE DETAILS, SEE SHEET 4 OF 4.

FOR WING DETAILS, SEE SHEET 3 OF 4.

THE CONTRACTOR HAS THE OPTION TO OMIT THE LATERAL GUIDE IF APPROVED BY THE ENGINEER.

PROJECT NO. BD-5110K
UNION COUNTY
STATION: 12+75.50 -L-

SHEET 2 OF 4

STATE OF NORTH CAROLINA
DEPARTMENT OF TRANSPORTATION
RALEIGH

SUBSTRUCTURE

END BENT No. 2

NORTH CAROLINA PROFESSIONAL SEAL 23371 ENGINEER VIPUL A. PATEL
8/1/12

ASSEMBLED BY :	H.T. DIEU	DATE : 7/26/12
CHECKED BY :	K. LAYNE	DATE : 7/30/12
DRAWN BY : DGE	02/10	
CHECKED BY : MKT	02/10	

01-AUG-2012 14:54
R:\structures\Plans\Plans\BD-5110K_SD_E*.dgn
jpadams

REVISIONS						SHEET NO.
NO.	BY:	DATE:	NO.	BY:	DATE:	S-13
1			3			TOTAL SHEETS
2			4			21

STD. NO. EB_33_90S

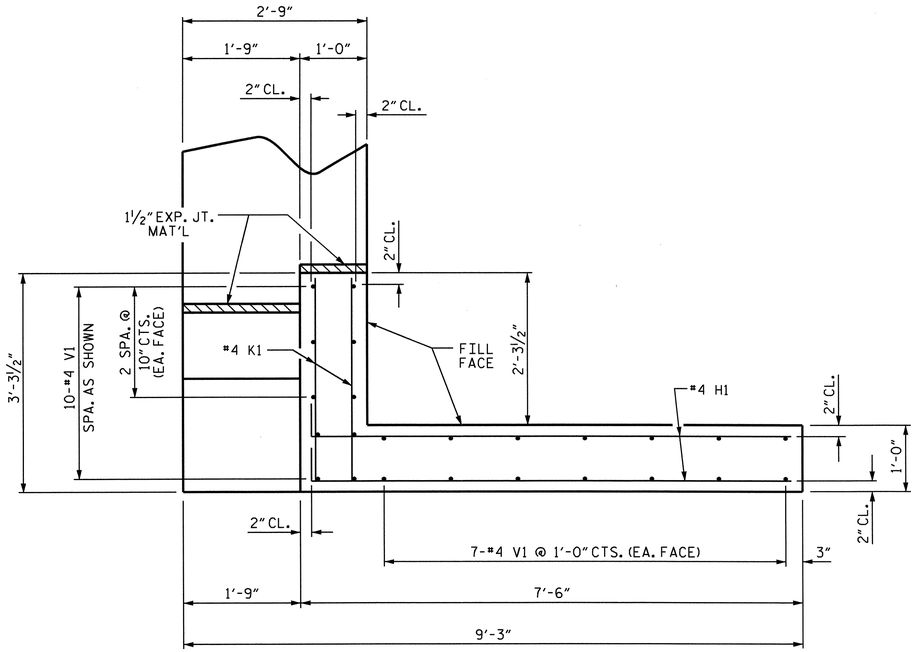

PLAN OF WING (W1)

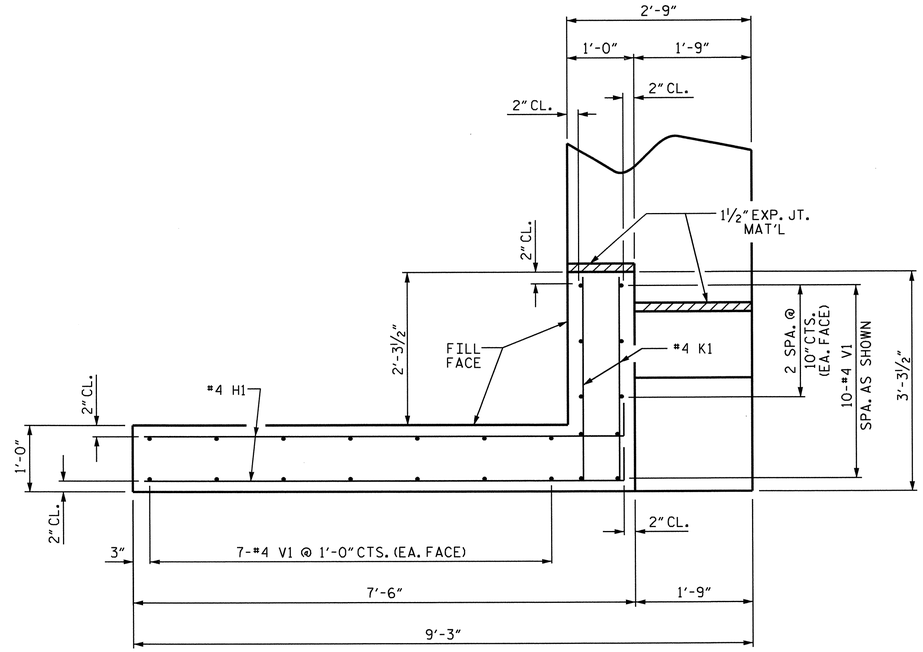

PLAN OF WING (W2)

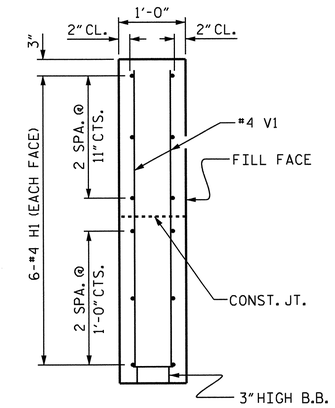

SECTION X-X

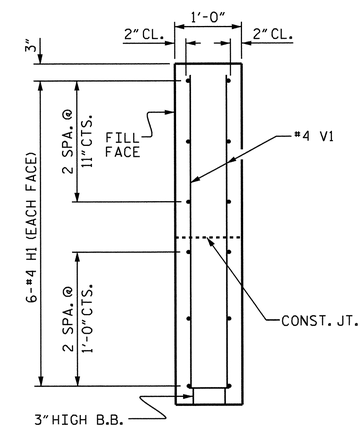

SECTION Y-Y

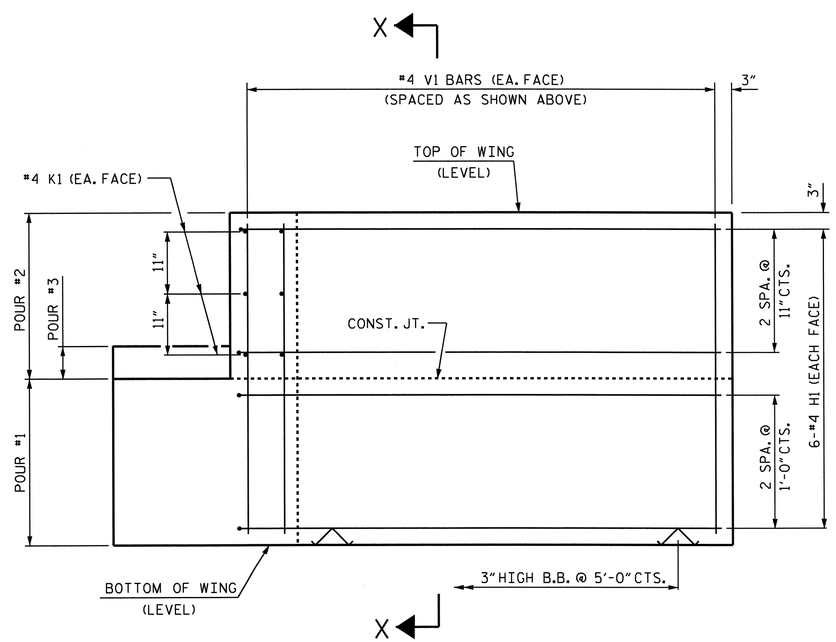

ELEVATION OF WING (W1)

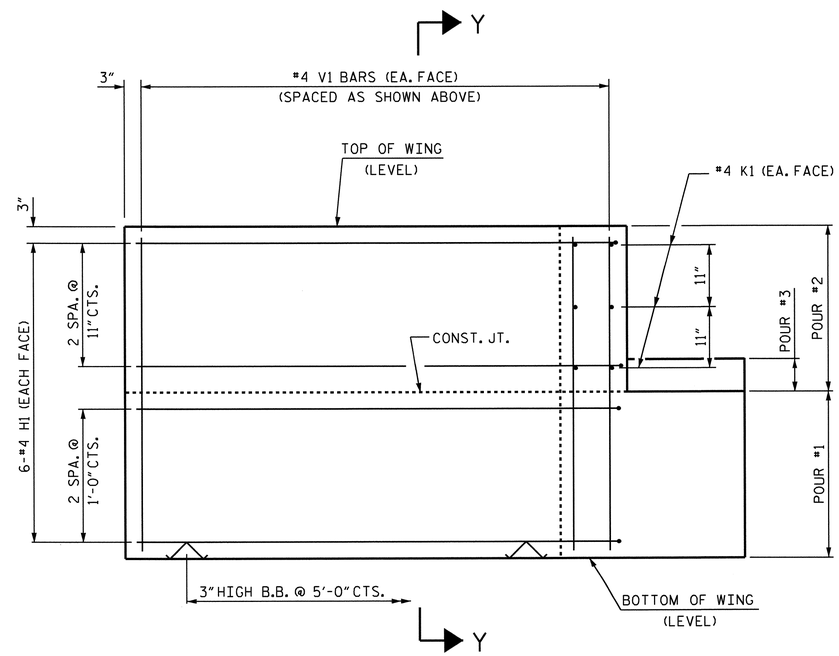

ELEVATION OF WING (W2)

WING DETAILS

PROJECT NO. BD-5110K

UNION COUNTY

STATION: 12+75.50 -L-

SHEET 3 OF 4

STATE OF NORTH CAROLINA
DEPARTMENT OF TRANSPORTATION
RALEIGH

SUBSTRUCTURE

END BENT
WING DETAILS

NORTH CAROLINA PROFESSIONAL SEAL 23371 ENGINEER V. PAUL A. PATEL
8/1/12

REVISIONS						SHEET NO.
NO.	BY:	DATE:	NO.	BY:	DATE:	S-14
1			3			TOTAL SHEETS
2			4			21

ASSEMBLED BY : H.T. DIEU	DATE : 7/26/12
CHECKED BY : K. LAYNE	DATE : 7/30/12
DRAWN BY : DGE 02/10	
CHECKED BY : MKT 02/10	

01-AUG-2012 14:54
R:\structures\Plans\Plans\BD-5110K_SD_E*.dgn
jpadams

STD. NO. EB_33_90S

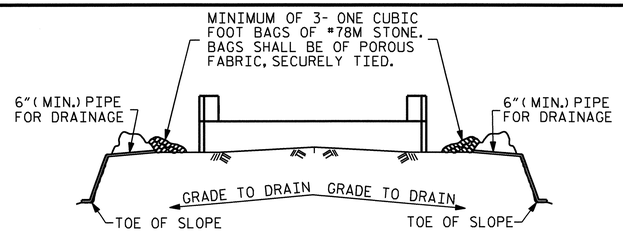

BAGGED STONE AND PIPE SHALL BE PLACED IMMEDIATELY AFTER COMPLETION OF END BENT EXCAVATION. PIPE MAY BE EITHER CONCRETE, CORRUGATED STEEL, CORRUGATED ALUMINUM ALLOY, OR CORRUGATED PLASTIC. PERFORATED PIPE WILL NOT BE ALLOWED.

BAGGED STONE SHALL REMAIN IN PLACE UNTIL THE ENGINEER DIRECTS THAT IT BE REMOVED. THE CONTRACTOR SHALL REMOVE AND DISPOSE OF SILT ACCUMULATIONS AT BAGGED STONE WHEN SO DIRECTED BY THE ENGINEER. BAGS SHALL BE REMOVED AND REPLACED WHENEVER THE ENGINEER DETERMINES THAT THEY HAVE DETERIORATED AND LOST THEIR EFFECTIVENESS.

NO SEPARATE PAYMENT WILL BE MADE FOR THIS WORK AND THE ENTIRE COST OF THIS WORK SHALL BE INCLUDED IN THE UNIT CONTRACT PRICE BID FOR THE SEVERAL PAY ITEMS.

TEMPORARY DRAINAGE AT END BENT

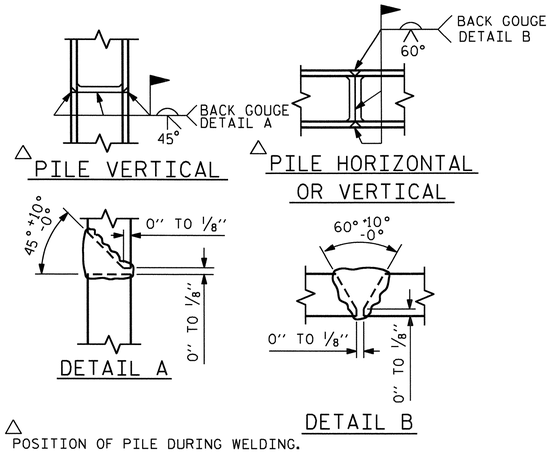

PILE SPLICE DETAILS

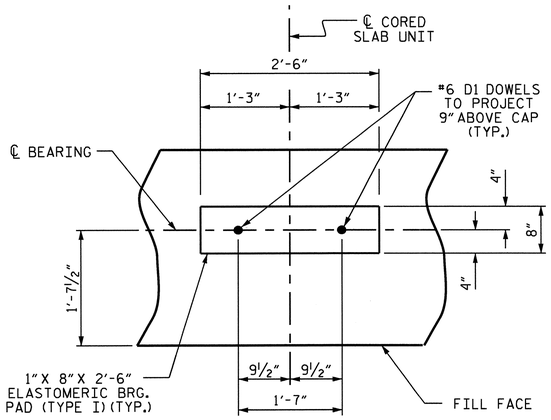

DETAIL "A"

(END BENT No. 1 SHOWN, END BENT No. 2 SIMILAR BY ROTATION)

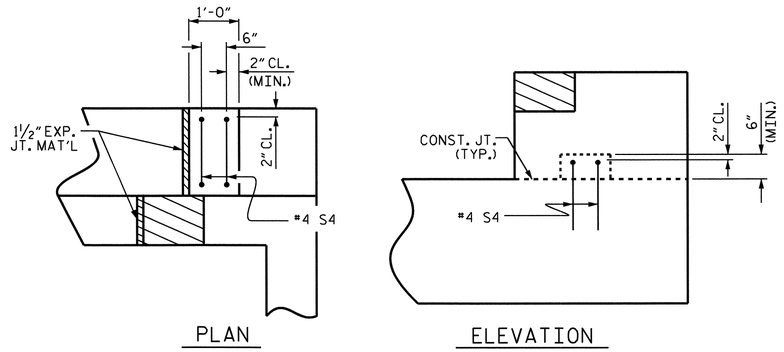

LATERAL GUIDE DETAILS

(RIGHT LATERAL GUIDE SHOWN, LEFT END SIMILAR)

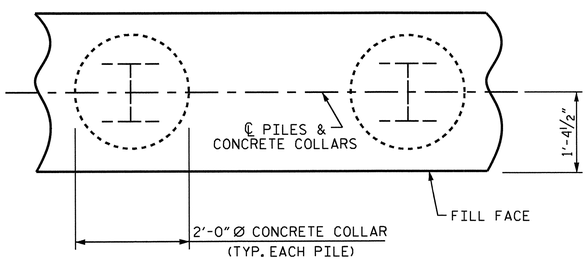

PLAN

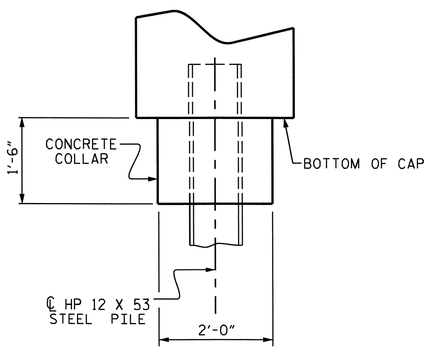

ELEVATION

CORROSION PROTECTION FOR STEEL PILES DETAIL

(END BENT No. 1 SHOWN, END BENT No. 2 SIMILAR BY ROTATION)

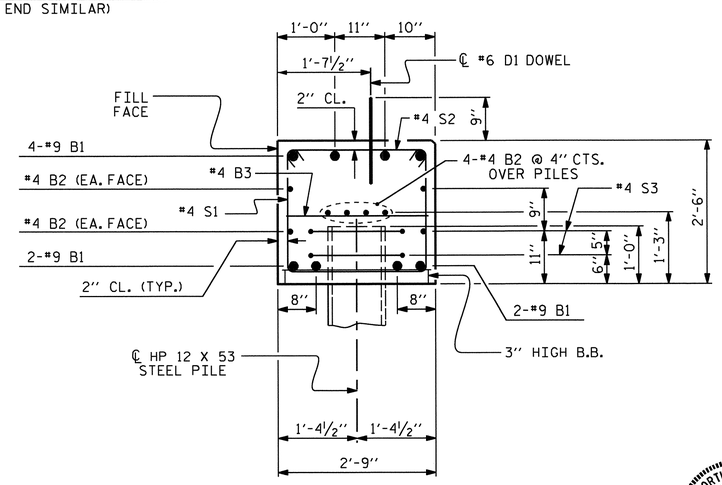

SECTION A-A

(CONCRETE COLLAR NOT SHOWN FOR CLARITY. SEE "CORROSION PROTECTION FOR STEEL PILES DETAIL.")

BAR TYPES

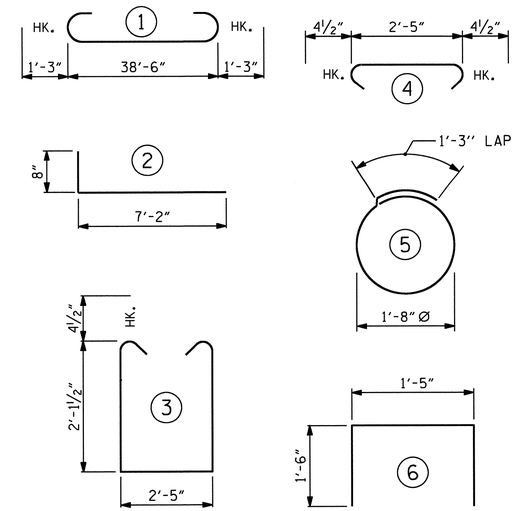

ALL BAR DIMENSIONS ARE OUT TO OUT.

END BENT No. 1	
HP 12 X 53 STEEL PILES	
NO: 7	LIN. FT.= 125.0

END BENT No. 2	
HP 12 X 53 STEEL PILES	
NO: 7	LIN. FT.= 105.0

BILL OF MATERIAL FOR ONE END BENT

BAR	NO.	SIZE	TYPE	LENGTH	WEIGHT
B1	8	#9	1	41'-0"	1115
B2	16	#4	STR	20'-7"	220
B3	10	#4	STR	2'-5"	16
D1	22	#6	STR	1'-6"	50
H1	24	#4	2	7'-10"	126
K1	12	#4	STR	2'-11"	23
S1	50	#4	3	7'-5"	248
S2	50	#4	4	3'-2"	106
S3	14	#4	5	6'-6"	61
S4	4	#4	6	4'-5"	12
V1	48	#4	STR	4'-8"	150

REINFORCING STEEL (FOR ONE END BENT) 2127 LBS.

CLASS A CONCRETE BREAKDOWN (FOR ONE END BENT)

POUR #1	CAP, LOWER PART OF WINGS & COLLARS	12.4 C.Y.
POUR #2	UPPER PART OF WINGS	1.8 C.Y.
POUR #3	LATERAL GUIDES	0.1 C.Y.
TOTAL CLASS A CONCRETE		14.3 C.Y.

PROJECT NO. BD-5110K
UNION COUNTY
STATION: 12+75.50 -L-

SHEET 4 OF 4

STATE OF NORTH CAROLINA
DEPARTMENT OF TRANSPORTATION
RALEIGH

SUBSTRUCTURE

END BENT No. 1 & 2 DETAILS

NORTH CAROLINA PROFESSIONAL SEAL 23371 ENGINEER VIPUL A. PATEL
8/1/12

ASSEMBLED BY :	H.T. DIEU	DATE : 7/26/12
CHECKED BY :	K. LAYNE	DATE : 7/30/12
DRAWN BY :	DGE 02/10	
CHECKED BY :	MKT 02/10	

REVISIONS							SHEET NO.
NO.	BY:	DATE:	NO.	BY:	DATE:		S-15
1			3				TOTAL SHEETS
2			4				21

01-AUG-2012 14:54
R:\structures\Plans\Plans\BD-5110K_SD_E*.dgn
jpadams

STD. NO. EB_33_90S

NOTES

STIRRUPS IN CAP MAY BE SHIFTED AS NECESSARY TO CLEAR DOWELS.

HOOKS ON "V" BARS MAY BE TURNED AS NECESSARY FOR PLACING REINFORCING STEEL.

FOR DRILLED PIERS, SEE SECTION 411 OF THE STANDARD SPECIFICATIONS.

ALL STEEL IN THE DRILLED PIERS IS INCLUDED IN THE PAY ITEMS FOR "REINFORCING STEEL" AND "SPIRAL COLUMN REINFORCING STEEL."

★ INVERT ALTERNATE STIRRUPS.

THE LOCATION OF THE CONSTRUCTION JOINT IN THE DRILLED PIERS IS BASED ON AN APPROXIMATE GROUND LINE ELEVATION. IF THE CONSTRUCTION JOINT IS ABOVE THE ACTUAL GROUND LINE ELEVATION, THE CONTRACTOR SHALL PLACE THE CONSTRUCTION JOINT ONE FOOT BELOW THE GROUND LINE.

DRILLED PIERS SHALL BE TERMINATED ONE FOOT ± ABOVE NORMAL WATER SURFACE ELEVATION FOR SHAFTS LOCATED IN WATER.

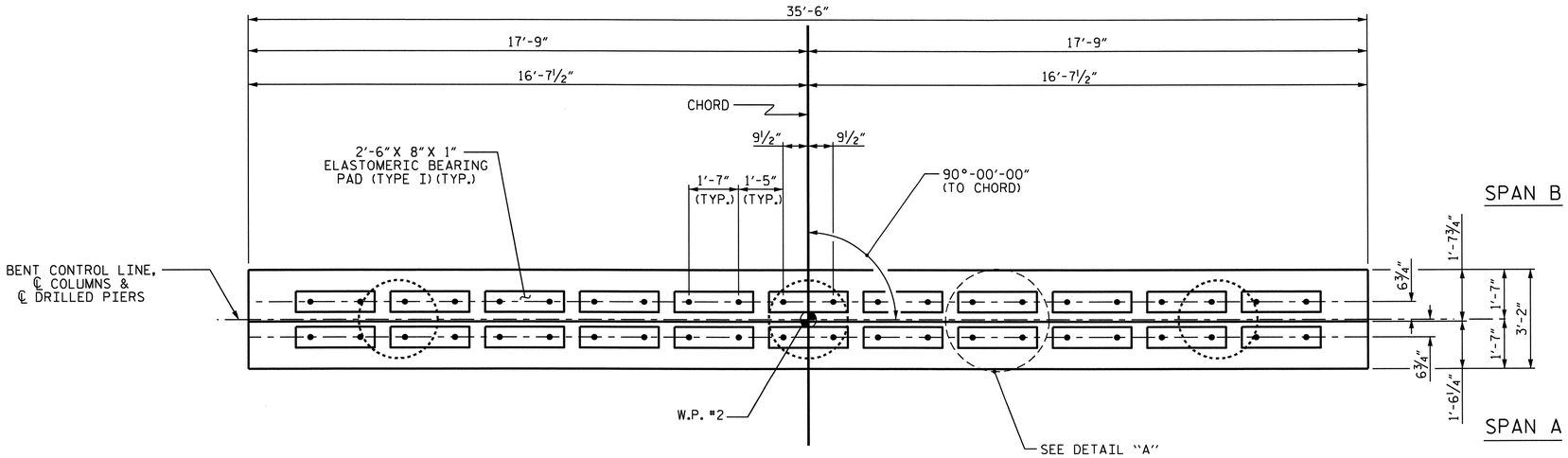

PLAN

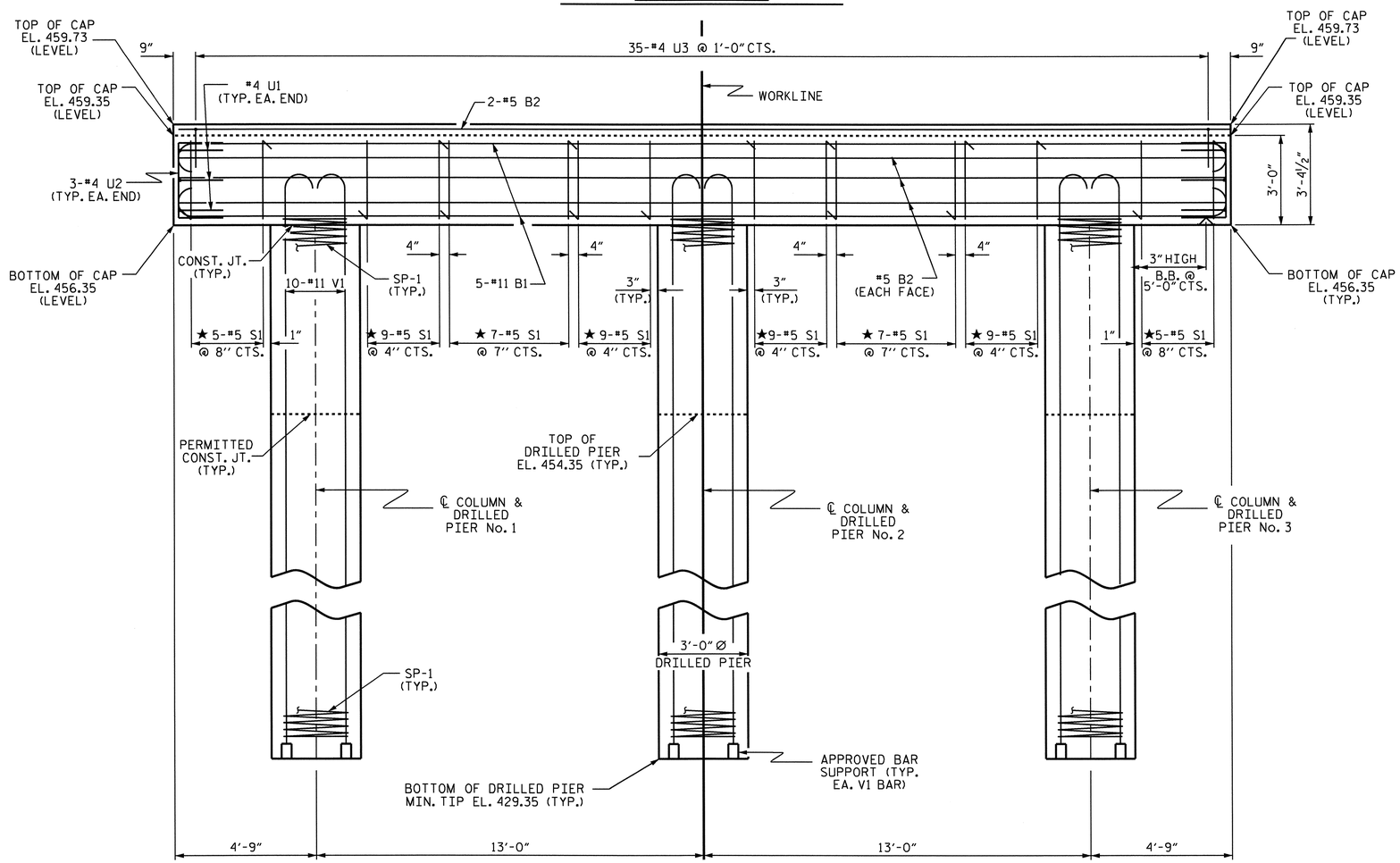

ELEVATION

DIMENSIONS & REINFORCING STEEL ARE TYPICAL FOR EACH COLUMN & DRILLED PIER UNLESS OTHERWISE NOTED.

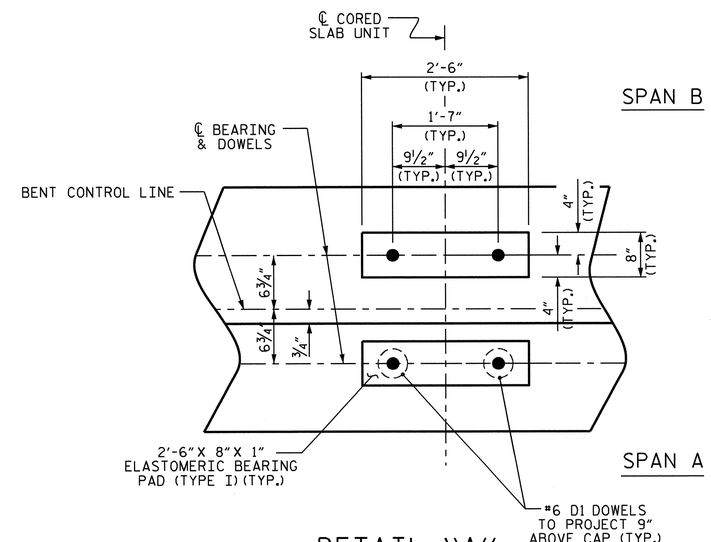

DETAIL "A"

(DIMENSIONS ARE TYPICAL EACH BEARING)

PROJECT NO. BD-5110K

UNION COUNTY

STATION: 12+75.50 -L-

SHEET 1 OF 2

STATE OF NORTH CAROLINA
DEPARTMENT OF TRANSPORTATION
RALEIGH

SUBSTRUCTURE

BENT No. 1

NORTH CAROLINA PROFESSIONAL SEAL 23371 ENGINEER VIPUL A. PATEL
8/1/12

REVISIONS						SHEET NO.
NO.	BY:	DATE:	NO.	BY:	DATE:	S-16
1			3			TOTAL SHEETS
2			4			21

ASSEMBLED BY :	H.T. DIEU	DATE :	7/26/12
CHECKED BY :	K. LAYNE	DATE :	7/30/12
DRAWN BY : DGE	03/10		
CHECKED BY : MKT	03/10		

01-AUG-2012 14:54
R:\structures\Plans\Plans\BD-5110K_SD_B*.dgn
jpadams

STD. NO. DP_BT_33_90S_<50'

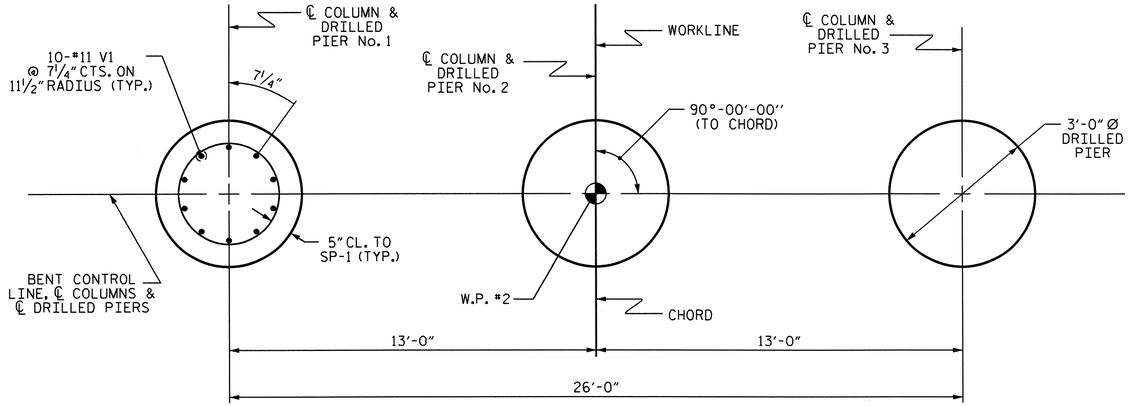

PLAN OF DRILLED PIERS & COLUMNS

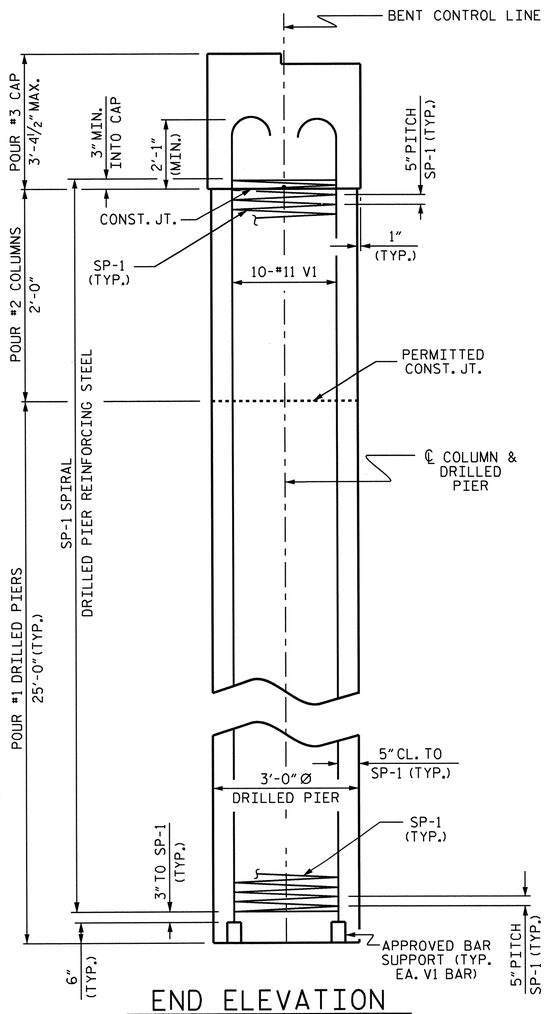

END ELEVATION

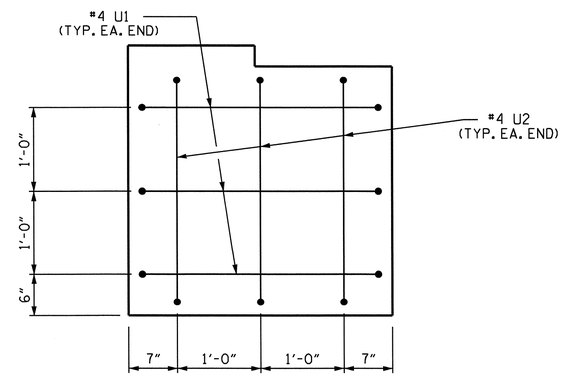

END OF CAP VIEW

(TYPICAL BOTH ENDS)

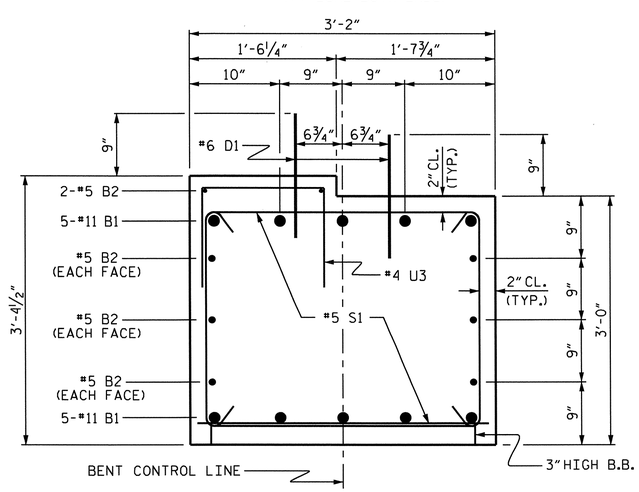

SECTION THRU CAP

BAR TYPES

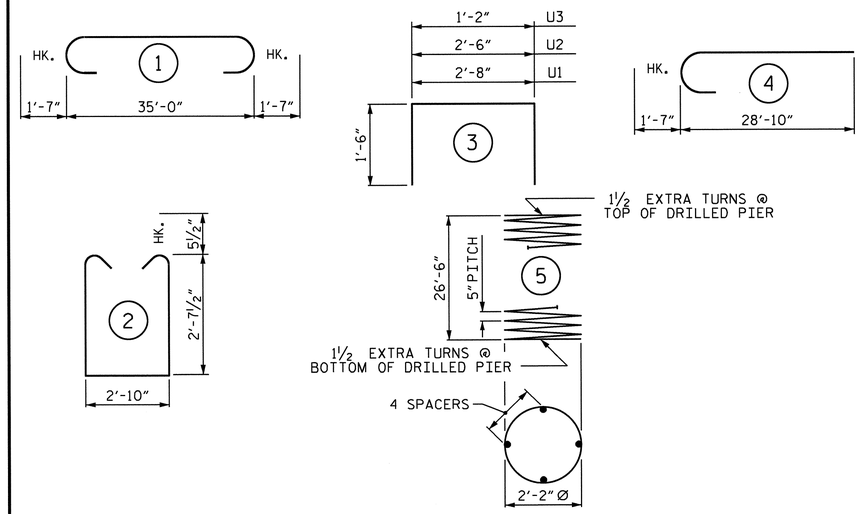

ALL BAR DIMENSIONS ARE OUT TO OUT

BILL OF MATERIAL
FOR ONE BENT

BAR	NO.	SIZE	TYPE	LENGTH	WEIGHT
B1	10	#11	1	38'-2"	2028
B2	8	#5	STR	35'-2"	293
D1	44	#6	STR	1'-6"	99
S1	60	#5	2	9'-0"	563
U1	6	#4	3	5'-8"	23
U2	6	#4	3	5'-6"	22
U3	35	#4	3	4'-2"	97
V1	30	#11	4	30'-5"	4848

REINFORCING STEEL (FOR ONE BENT) 7973 LBS.

SP-1	3	*	5	444'-4"	1390

SPIRAL COLUMN REINFORCING STEEL (FOR ONE BENT) 1390 LBS.

* THE SP-1 SPIRAL REINFORCING STEEL SHALL BE W31 OR D-31 COLD DRAWN WIRE OR #5 PLAIN OR DEFORMED BAR

CLASS A CONCRETE BREAKDOWN (FOR ONE BENT)

POUR #2 (COLMUNS)	1.6 C.Y.
POUR #3 (CAP)	13.2 C.Y.
TOTAL CLASS A CONCRETE	14.8 C.Y.

DRILLED PIERS: (FOR ONE BENT)

DRILLED PIER CONCRETE	
POUR #1 (DRILLED PIERS)	19.6 C.Y.
3'-0" Ø DRILLED PIER NOT IN SOIL	20 LIN. FT.
3'-0" Ø DRILLED PIER IN SOIL	55 LIN. FT.
PERMANENT STEEL CASING FOR 3'-0" Ø DRILLED PIER	37.1 LIN. FT.
CSL TUBES	318 LIN. FT.

PROJECT NO. BD-5110K
UNION COUNTY
STATION: 12+75.50 -L-

SHEET 2 OF 2

STATE OF NORTH CAROLINA
DEPARTMENT OF TRANSPORTATION
RALEIGH

SUBSTRUCTURE

BENT No. 1

NORTH CAROLINA PROFESSIONAL SEAL 23371 ENGINEER VIPUL A. PATEL
8/1/12

REVISIONS						SHEET NO.
NO.	BY:	DATE:	NO.	BY:	DATE:	S-17
1			3			TOTAL SHEETS
2			4			21

ASSEMBLED BY :	H.T. DIEU	DATE :	7/26/12
CHECKED BY :	K. LAYNE	DATE :	7/30/12
DRAWN BY :	DGE	03/10	
CHECKED BY :	MKT	03/10	

01-AUG-2012 14:54
R:\structures\Plans\Plans\BD-5110K_SD_B*.dgn
jpadams

STD. NO. DP_BT_33_90S_<50'

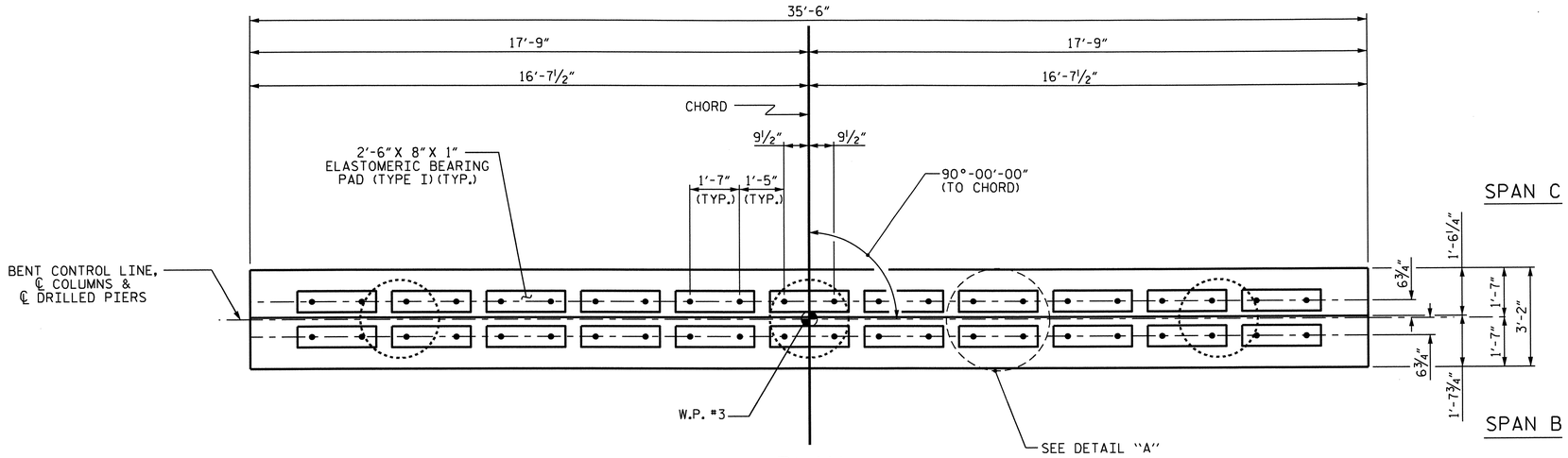

PLAN

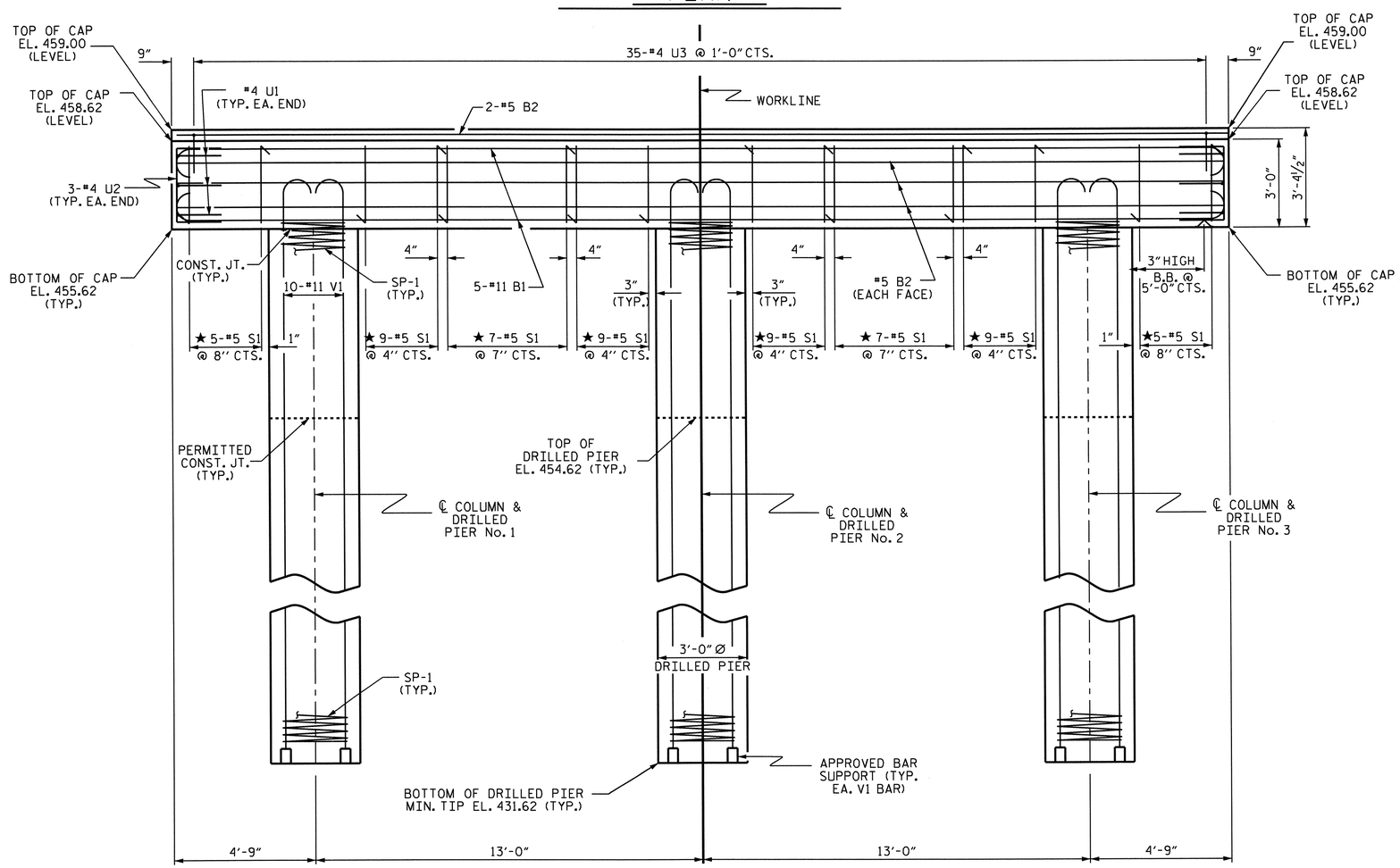

ELEVATION

DIMENSIONS & REINFORCING STEEL ARE TYPICAL FOR EACH COLUMN & DRILLED PIER UNLESS OTHERWISE NOTED.

NOTES

STIRRUPS IN CAP MAY BE SHIFTED AS NECESSARY TO CLEAR DOWELS.

HOOKS ON "V" BARS MAY BE TURNED AS NECESSARY FOR PLACING REINFORCING STEEL.

FOR DRILLED PIERS, SEE SECTION 411 OF THE STANDARD SPECIFICATIONS.

ALL STEEL IN THE DRILLED PIERS IS INCLUDED IN THE PAY ITEMS FOR "REINFORCING STEEL" AND "SPIRAL COLUMN REINFORCING STEEL."

★ INVERT ALTERNATE STIRRUPS.

THE LOCATION OF THE CONSTRUCTION JOINT IN THE DRILLED PIERS IS BASED ON AN APPROXIMATE GROUND LINE ELEVATION. IF THE CONSTRUCTION JOINT IS ABOVE THE ACTUAL GROUND LINE ELEVATION, THE CONTRACTOR SHALL PLACE THE CONSTRUCTION JOINT ONE FOOT BELOW THE GROUND LINE.

DRILLED PIERS SHALL BE TERMINATED ONE FOOT ± ABOVE NORMAL WATER SURFACE ELEVATION FOR SHAFTS LOCATED IN WATER.

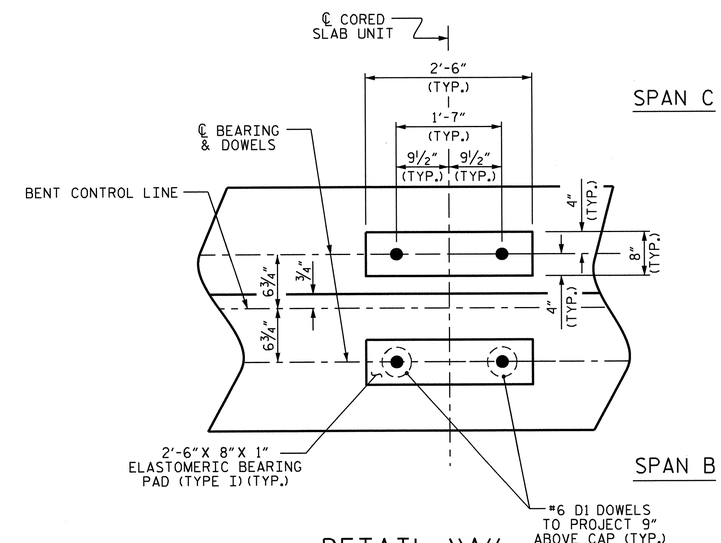

DETAIL "A"

(DIMENSIONS ARE TYPICAL EACH BEARING)

PROJECT NO. BD-5110K

UNION COUNTY

STATION: 12+75.50 -L-

SHEET 1 OF 2

STATE OF NORTH CAROLINA
DEPARTMENT OF TRANSPORTATION
RALEIGH

SUBSTRUCTURE

BENT No. 2

ASSEMBLED BY :	H.T. DIEU	DATE : 7/26/12	
CHECKED BY :	K. LAYNE	DATE : 7/30/12	
DRAWN BY : DGE	03/10		
CHECKED BY : MKT	03/10		

REVISIONS						SHEET NO.
NO.	BY:	DATE:	NO.	BY:	DATE:	S-18
1			3			TOTAL SHEETS
2			4			21

NORTH CAROLINA PROFESSIONAL SEAL 23371 ENGINEER PATEL VIPUL A. PATEL
8/1/12

01-AUG-2012 14:54
R:\structures\Plans\Plans\BD-5110K_SD_B*.dgn
jpadams

STD. NO. DP_BT_33_90S_<50'

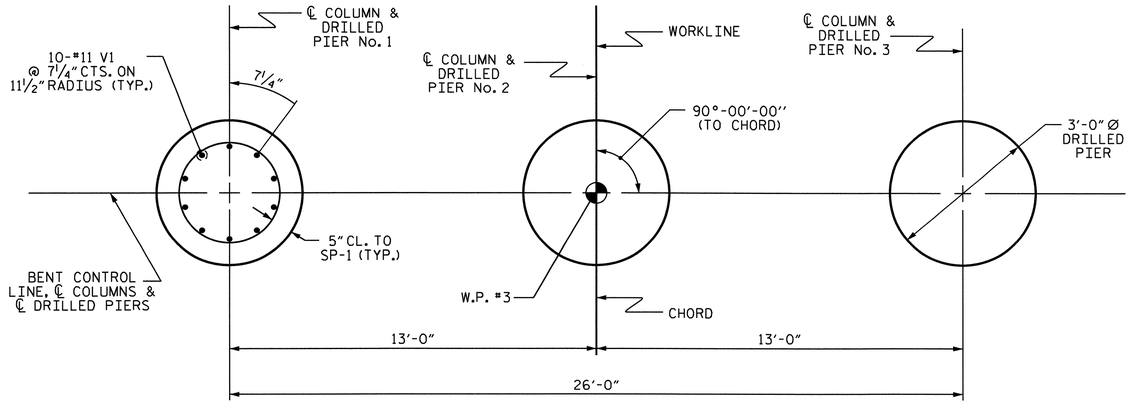

PLAN OF DRILLED PIERS & COLUMNS

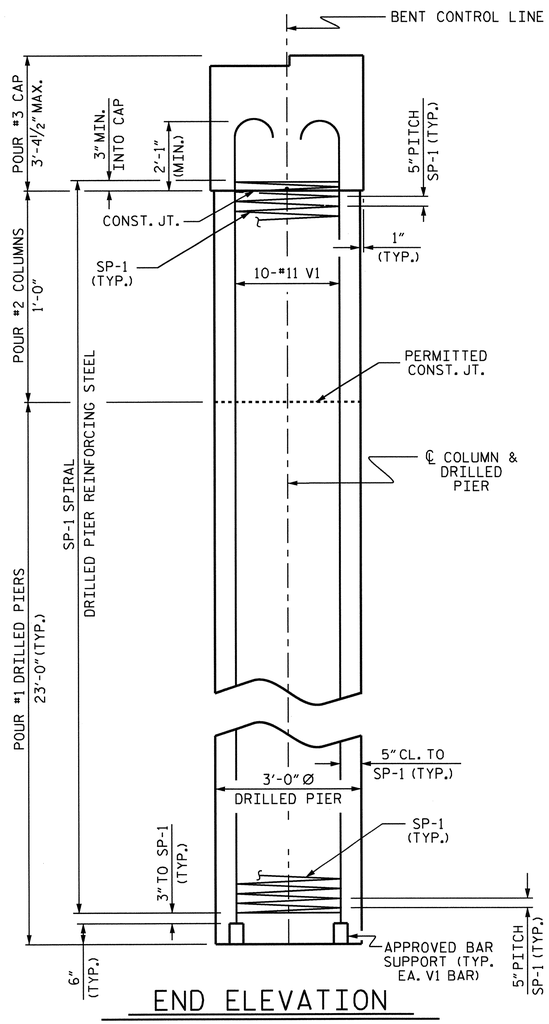

END ELEVATION

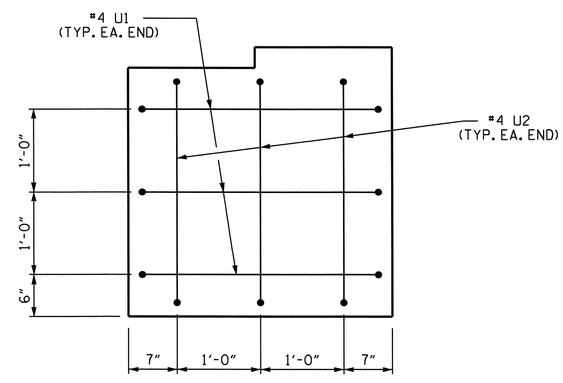

END OF CAP VIEW

(TYPICAL BOTH ENDS)

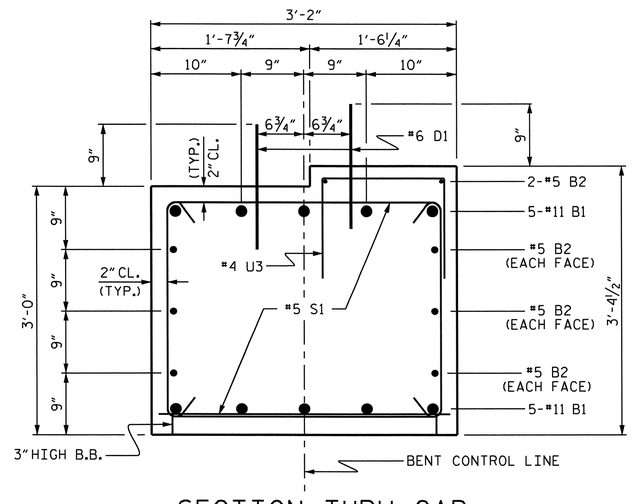

SECTION THRU CAP

BAR TYPES

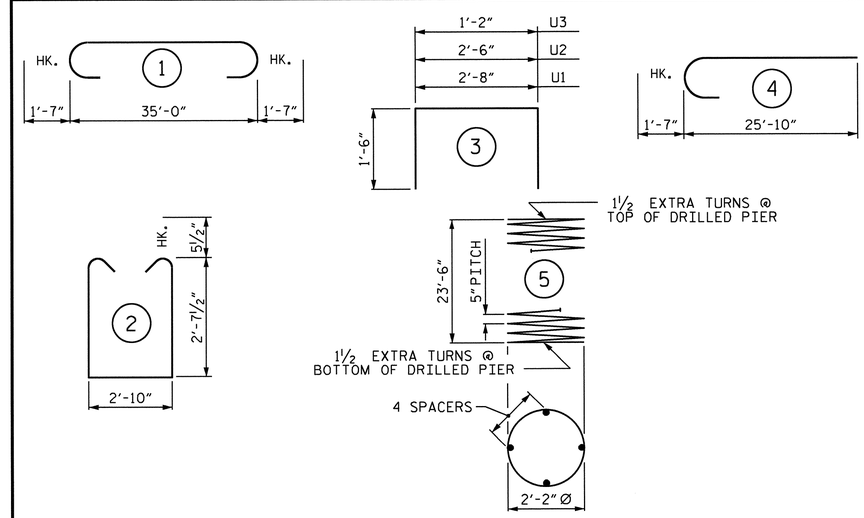

ALL BAR DIMENSIONS ARE OUT TO OUT

BILL OF MATERIAL
FOR ONE BENT

BAR	NO.	SIZE	TYPE	LENGTH	WEIGHT
B1	10	#11	1	38'-2"	2028
B2	8	#5	STR	35'-2"	293
D1	44	#6	STR	1'-6"	99
S1	60	#5	2	9'-0"	563
U1	6	#4	3	5'-8"	23
U2	6	#4	3	5'-6"	22
U3	35	#4	3	4'-2"	97
V1	30	#11	4	27'-5"	4370
REINFORCING STEEL (FOR ONE BENT)					7495 LBS.
SP-1	3	*	5	396'-1"	1239
SPIRAL COLUMN REINFORCING STEEL (FOR ONE BENT)					1239 LBS.

* THE SP-1 SPIRAL REINFORCING STEEL SHALL BE W31 OR D-31 COLD DRAWN WIRE OR #5 PLAIN OR DEFORMED BAR

CLASS A CONCRETE BREAKDOWN (FOR ONE BENT)

POUR #2 (COLUMNS)	0.8 C.Y.
POUR #3 (CAP)	13.2 C.Y.
TOTAL CLASS A CONCRETE	14.0 C.Y.

DRILLED PIERS: (FOR ONE BENT)

DRILLED PIER CONCRETE POUR #1 (DRILLED PIERS)	18.1 C.Y.
3'-0" Ø DRILLED PIER NOT IN SOIL	30 LIN. FT.
3'-0" Ø DRILLED PIER IN SOIL	39 LIN. FT.
PERMANENT STEEL CASING FOR 3'-0" Ø DRILLED PIER	37.9 LIN. FT.
CSL TUBES	294 LIN. FT.

PROJECT NO. BD-5110K
UNION COUNTY
STATION: 12+75.50 -L-

SHEET 2 OF 2

STATE OF NORTH CAROLINA
DEPARTMENT OF TRANSPORTATION
RALEIGH

SUBSTRUCTURE
BENT No. 2

NORTH CAROLINA PROFESSIONAL SEAL 23371 ENGINEER VIPUL A. PATEL
8/1/12

ASSEMBLED BY :	H.T. DIEU	DATE : 7/26/12
CHECKED BY :	K. LAYNE	DATE : 7/30/12
DRAWN BY : DGE	03/10	
CHECKED BY : MKT	03/10	

REVISIONS						SHEET NO.
NO.	BY:	DATE:	NO.	BY:	DATE:	S-19
1			3			TOTAL SHEETS
2			4			21

01-AUG-2012 14:54
R:\structures\Plans\Plans\BD-5110K_SD_B*.dgn
jpadams

STD. NO. DP_BT_33_90S_<50'

ESTIMATED QUANTITIES		
BRIDGE @ STA. 12+75.50 -L-	RIP RAP CLASS II (2'-0" THICK)	GEOTEXTILE FOR DRAINAGE
	TONS	SQUARE YARDS
END BENT #1	55	60
BENT #1	50	55
END BENT #2	55	60

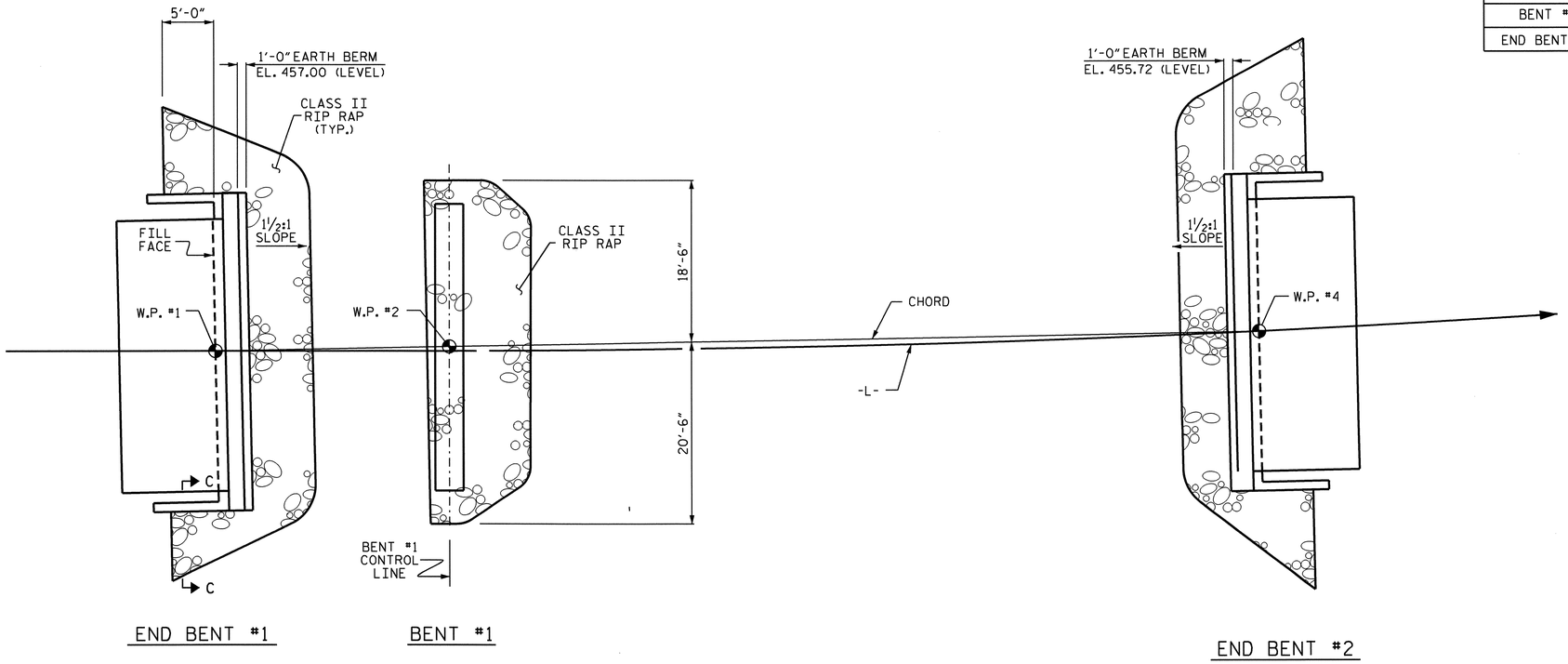

PLAN OF RIP RAP

END BENT #1

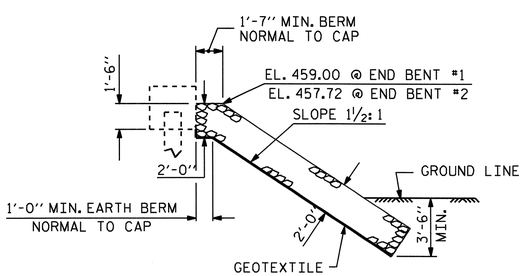

℄ SECTION

BERM RIP RAPPED

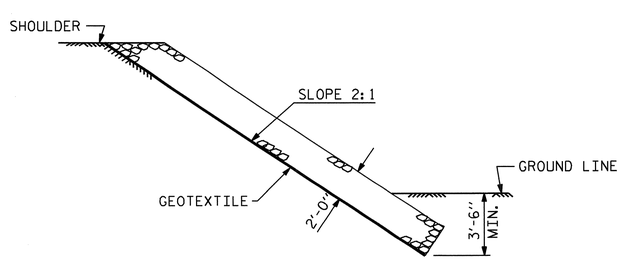

SECTION C-C

PROJECT NO. BD-5110K

UNION COUNTY

STATION: 12+75.50-L-

STATE OF NORTH CAROLINA
DEPARTMENT OF TRANSPORTATION
RALEIGH

STANDARD

RIP RAP DETAILS

NORTH CAROLINA PROFESSIONAL SEAL 23371 ENGINEER PAUL A. PATEL

8/1/12

REVISIONS						SHEET NO.
NO.	BY:	DATE:	NO.	BY:	DATE:	S-20
1			3			TOTAL SHEETS
2			4			21

DRAWN BY : J. G. KHARVA DATE : 02/2012
CHECKED BY : K. LAYNE DATE : 07/2012

01-AUG-2012 14:54
R:\structures\Plans\Plans\BD-5110K_SD_RR.dgn
jpadams

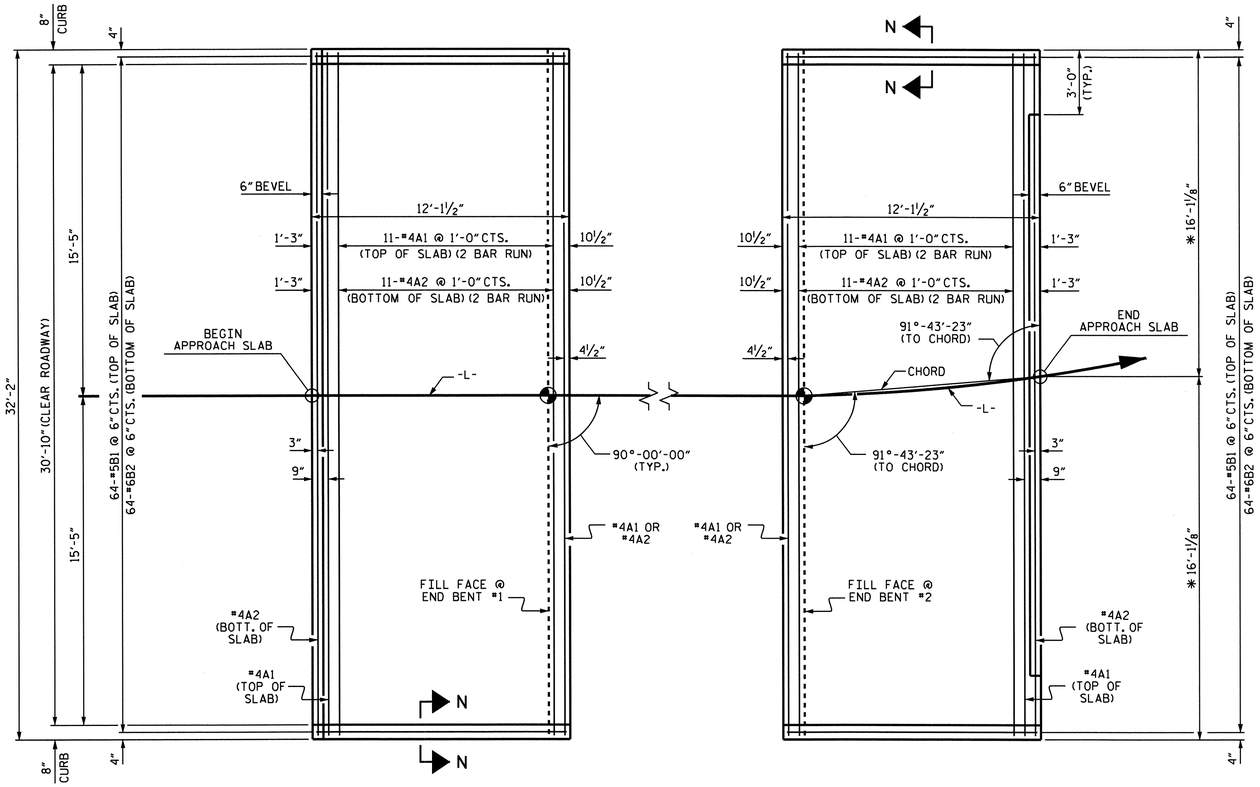

PLAN @ END BENT #1

PLAN @ END BENT #2

DIMENSIONS SHOWN ARE TYPICAL FOR BOTH APPROACH SLABS

✱ RADIAL DIMENSIONS

NOTES

FOR BRIDGE APPROACH FILL INCLUDING GEOTEXTILE, 4" Ø DRAINAGE PIPE, AND #78M STONE BACKFILL, SEE ROADWAY PLANS.

GEOTEXTILE SHALL BE TYPE 1 IN ACCORDANCE WITH THE STANDARD SPECIFICATIONS SECTION 1056.

#78M STONE BACKFILL (CLASS V SELECT MATERIAL) SHALL BE IN ACCORDANCE WITH STANDARD SPECIFICATIONS SECTION 1016.

#78M STONE BACKFILL IS TO BE CONTINUOUS ALONG FILL FACE OF BACKWALL FROM OUTSIDE EDGE TO OUTSIDE EDGE OF APPROACH SLAB.

FOR THE 4" Ø DRAINAGE PIPE OUTLET(S), SEE ROADWAY STANDARD DRAWINGS.

AREA BETWEEN THE WINGWALL AND APPROACH SLAB SHALL BE GRADED TO DRAIN THE WATER AWAY FROM THE FILL FACE OF THE BRIDGE AND SHALL BE PAVED. SEE ROADWAY PLANS.

APPROACH SLAB GROOVING IS NOT REQUIRED.

ARC OFFSETS ARE NEGLIGIBLE.

BILL OF MATERIAL

APPROACH SLAB AT EB #1

BAR	NO.	SIZE	TYPE	LENGTH	WEIGHT
✱ A1	26	#4	STR	16'-11"	294
A2	26	#4	STR	16'-9"	291
✱ B1	64	#5	STR	11'-2"	745
B2	64	#6	STR	11'-8"	1121
REINFORCING STEEL				LBS.	1412
✱ EPOXY COATED REINFORCING STEEL				LBS.	1039
CLASS AA CONCRETE				C. Y.	18.6

APPROACH SLAB AT EB #2

BAR	NO.	SIZE	TYPE	LENGTH	WEIGHT
✱ A1	26	#4	STR	16'-11"	294
A2	26	#4	STR	16'-9"	291
✱ B1	64	#5	STR	11'-2"	745
B2	64	#6	STR	11'-8"	1121
REINFORCING STEEL				LBS.	1412
✱ EPOXY COATED REINFORCING STEEL				LBS.	1039
CLASS AA CONCRETE				C. Y.	18.6

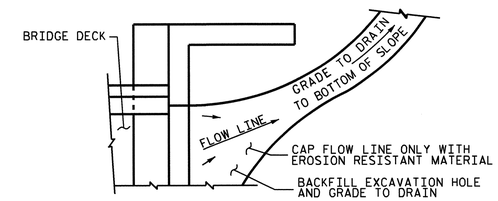

NOTE: IF THE APPROACH SLAB IS NOT CONSTRUCTED IMMEDIATELY AFTER THE BACKFILLING OF THE END BENT EXCAVATION, GRADE TO DRAIN TO THE BOTTOM OF THE SLOPE AND PROVIDE EROSION RESISTANT MATERIAL, SUCH AS FIBERGLASS ROVING OR AS DIRECTED BY THE ENGINEER TO PREVENT SOIL EROSION AND TO PROTECT THE AREA ADJACENT TO THE STRUCTURE. THE CONTRACTOR WILL BE REQUIRED TO REMOVE THESE MATERIALS PRIOR TO CONSTRUCTION OF THE APPROACH SLAB.

TEMPORARY DRAINAGE DETAIL

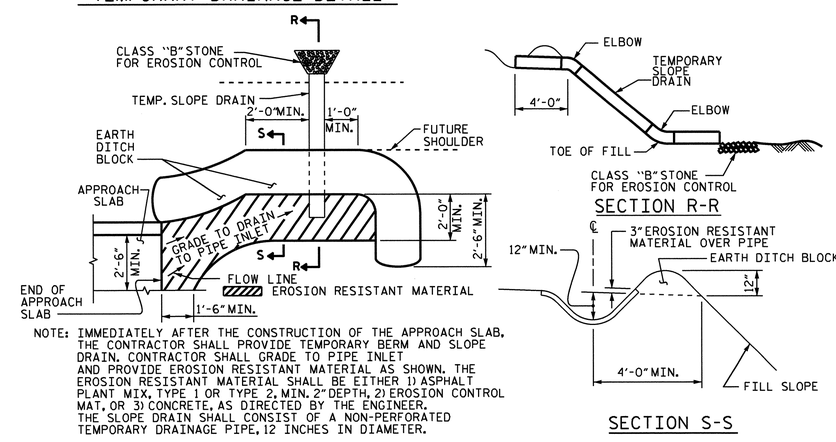

NOTE: IMMEDIATELY AFTER THE CONSTRUCTION OF THE APPROACH SLAB, THE CONTRACTOR SHALL PROVIDE TEMPORARY BERM AND SLOPE DRAIN. CONTRACTOR SHALL GRADE TO PIPE INLET AND PROVIDE EROSION RESISTANT MATERIAL AS SHOWN. THE EROSION RESISTANT MATERIAL SHALL BE EITHER 1) ASPHALT PLANT MIX, TYPE 1 OR TYPE 2, MIN. 2" DEPTH, 2) EROSION CONTROL MAT, OR 3) CONCRETE, AS DIRECTED BY THE ENGINEER. THE SLOPE DRAIN SHALL CONSIST OF A NON-PERFORATED TEMPORARY DRAINAGE PIPE, 12 INCHES IN DIAMETER.

PLAN VIEW

TEMPORARY BERM AND SLOPE DRAIN DETAILS

(TO BE USED WHEN SHOULDER BERM GUTTER IS REQUIRED)

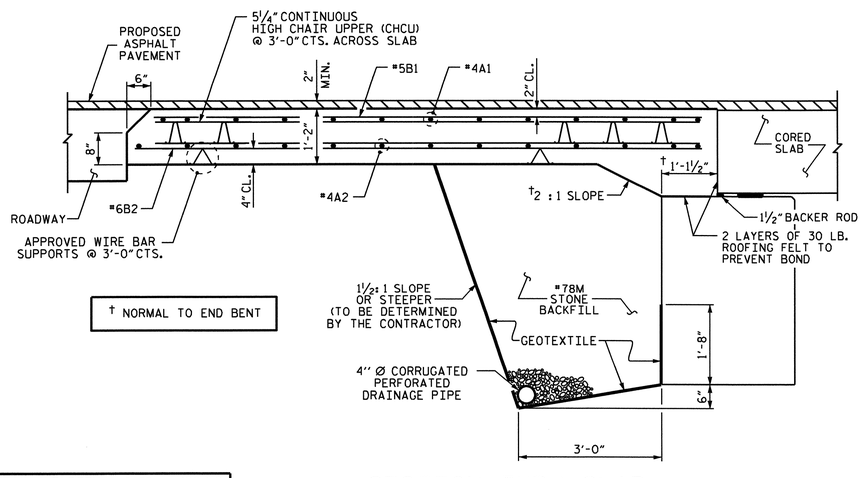

† NORMAL TO END BENT

SECTION THRU SLAB

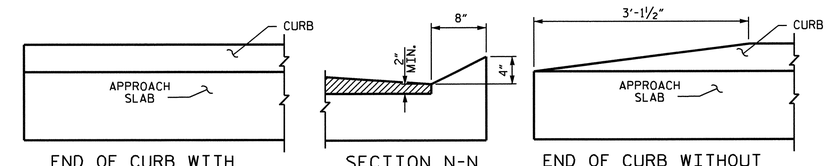

END OF CURB WITH SHOULDER BERM GUTTER

SECTION N-N

END OF CURB WITHOUT SHOULDER BERM GUTTER

CURB DETAILS

SPLICE LENGTHS		
BAR SIZE	EPOXY COATED	UNCOATED
#4	2'-0"	1'-9"
#5	2'-6"	2'-2"
#6	3'-10"	2'-7"

PROJECT NO. BD-5110K

UNION COUNTY

STATION: 12+75.50 -L-

STATE OF NORTH CAROLINA
DEPARTMENT OF TRANSPORTATION
RALEIGH

STANDARD
BRIDGE APPROACH SLAB
FOR PRESTRESSED CONCRETE
CORED SLAB UNIT
(SUB-REGIONAL TIER)
90° SKEW

NORTH CAROLINA PROFESSIONAL SEAL 23371 ENGINEER VIPUL A. PATEL
8/1/12

REVISIONS						SHEET NO.
NO.	BY:	DATE:	NO.	BY:	DATE:	S-21
1			3			TOTAL SHEETS
2			4			21

ASSEMBLED BY : H.T. DIEU DATE : 7/26/12
CHECKED BY : K. LAYNE DATE : 7/30/12
DRAWN BY : SHS/MAA 5-09
CHECKED BY : BCH 5-09
REV. 12-11 MAA/AAC

01-AUG-2012 14:54
R:\structures\Plans\Plans\BD-5110K_SD_AS.dgn
jpadams

STD. NO. BAS_33_90S

STANDARD NOTES

DESIGN DATA:

SPECIFICATIONS	A.A.S.H.T.O. (CURRENT)
LIVE LOAD	SEE PLANS
IMPACT ALLOWANCE	SEE A.A.S.H.T.O.
STRESS IN EXTREME FIBER OF	
STRUCTURAL STEEL - AASHTO M270 GRADE 36	20,000 LBS. PER SQ. IN.
- AASHTO M270 GRADE 50W	27,000 LBS. PER SQ. IN.
- AASHTO M270 GRADE 50	27,000 LBS. PER SQ. IN.
REINFORCING STEEL IN TENSION	
GRADE 60	24,000 LBS. PER SQ. IN.
CONCRETE IN COMPRESSION	1,200 LBS. PER SQ. IN.
CONCRETE IN SHEAR	SEE A.A.S.H.T.O.
STRUCTURAL TIMBER - TREATED OR	
UNTREATED - EXTREME FIBER STRESS	1,800 LBS. PER SQ. IN.
COMPRESSION PERPENDICULAR TO GRAIN OF TIMBER	375 LBS. PER SQ. IN.
EQUIVALENT FLUID PRESSURE OF EARTH	30 LBS. PER CU. FT. (MINIMUM)

MATERIAL AND WORKMANSHIP:

EXCEPT AS MAY OTHERWISE BE SPECIFIED ON PLANS OR IN THE SPECIAL PROVISIONS, ALL MATERIAL AND WORKMANSHIP SHALL BE IN ACCORDANCE WITH THE 2012 "STANDARD SPECIFICATIONS FOR ROADS AND STRUCTURES" OF THE N. C. DEPARTMENT OF TRANSPORTATION.

STEEL SHEET PILING FOR PERMANENT OR TEMPORARY APPLICATIONS SHALL BE HOT ROLLED.

CONCRETE:

UNLESS OTHERWISE REQUIRED ON PLANS, CLASS A CONCRETE SHALL BE USED FOR ALL PORTIONS OF ALL STRUCTURES WITH THE EXCEPTION THAT: CLASS AA CONCRETE SHALL BE USED IN BRIDGE SUPERSTRUCTURES, ABUTMENT BACKWALLS, AND APPROACH SLABS; AND CLASS B CONCRETE SHALL BE USED FOR SLOPE PROTECTION AND RIP RAP.

CONCRETE CHAMFERS:

UNLESS OTHERWISE NOTED ON THE PLANS, ALL EXPOSED CORNERS ON STRUCTURES SHALL BE CHAMFERED 3/4" WITH THE FOLLOWING EXCEPTIONS: TOP CORNERS OF CURBS MAY BE ROUNDED TO 1-1/2" RADIUS WHICH IS BUILT INTO CURB FORMS; CORNERS OF TRANSVERSE FLOOR EXPANSION JOINTS SHALL BE ROUNDED WITH A 1/4" FINISHING TOOL UNLESS OTHERWISE REQUIRED ON PLANS; AND CORNERS OF EXPANSION JOINTS IN THE ROADWAY FACES AND TOPS OF CURBS AND SIDEWALKS SHALL BE ROUNDED TO A 1/4" RADIUS WITH A FINISHING STONE OR TOOL UNLESS OTHERWISE REQUIRED ON PLANS.

DOWELS:

DOWELS WHEN INDICATED ON PLANS AS FOR CULVERT EXTENSIONS, SHALL BE EMBEDDED AT LEAST 12" INTO THE OLD CONCRETE AND GROUTED INTO PLACE WITH 1:2 CEMENT MORTAR.

ALLOWANCE FOR DEAD LOAD DEFLECTION, SETTLEMENT, ETC. IN CASTING SUPERSTRUCTURES:

BRIDGES SHALL BE BUILT ON THE GRADE OR VERTICAL CURVE SHOWN ON PLANS. SLABS, CURBS AND PARAPETS SHALL CONFORM TO THE GRADE OR CURVE.

ALL DIMENSIONS WHICH ARE GIVEN IN SECTION AND ARE AFFECTED BY DEAD LOAD DEFLECTIONS ARE DIMENSIONS AT CENTER LINE OF BEARING UNLESS OTHERWISE NOTED ON PLANS. IN SETTING FORMS FOR STEEL BEAM BRIDGES AND PRESTRESSED CONCRETE GIRDER BRIDGES, ADJUSTMENTS SHALL BE MADE DUE TO THE DEAD LOAD DEFLECTIONS FOR THE ELEVATIONS SHOWN. WHERE BLOCKS ARE SHOWN OVER BEAMS FOR BUILDING UP TO THE SLAB, THE VERTICAL DIMENSIONS OF THE BLOCKS SHALL BE ADJUSTED BETWEEN BEARINGS TO COMPENSATE FOR DEAD LOAD DEFLECTIONS, VERTICAL CURVE ORDINATE, AND ACTUAL BEAM CAMBER. WHERE BOTTOM OF SLAB IS IN LINE WITH BOTTOM OF TOP FLANGES, DEPTH OF SLAB BETWEEN BEARINGS SHALL BE ADJUSTED TO COMPENSATE FOR DEAD LOAD DEFLECTION, VERTICAL CURVE ORDINATE, AND ACTUAL BEAM CAMBER.

IN SETTING FALSEWORK AND FORMS FOR REINFORCED CONCRETE SPANS, AN ALLOWANCE SHALL BE MADE FOR DEAD LOAD DEFLECTIONS, SETTLEMENT OF FALSEWORK, AND PERMANENT CAMBER WHICH SHALL BE PROVIDED FOR IN ADDITION TO THE ELEVATIONS SHOWN. AFTER REMOVAL OF THE FALSEWORK, THE FINISHED STRUCTURES SHALL CONFORM TO THE PROFILE AND ELEVATIONS SHOWN ON THE PLANS AND CONSTRUCTION ELEVATIONS FURNISHED BY THE ENGINEER.

DETAILED DRAWINGS FOR FALSEWORK OR FORMS FOR BRIDGE SUPERSTRUCTURE AND ANY STRUCTURE OR PARTS OF A STRUCTURE AS NOTED ON THE PLANS SHALL BE SUBMITTED TO THE ENGINEER FOR APPROVAL BEFORE CONSTRUCTION OF THE FALSEWORK OR FORMS IS STARTED.

REINFORCING STEEL:

ALL REINFORCING STEEL SHALL BE DEFORMED. DIMENSIONS RELATIVE TO PLACEMENT OF REINFORCING ARE TO CENTERS OF BARS UNLESS OTHERWISE INDICATED IN THE PLANS. DIMENSIONS ON BAR DETAILS ARE TO CENTERS OF BARS OR ARE OUT TO OUT AS INDICATED ON PLANS.

WIRE BAR SUPPORTS SHALL BE PROVIDED FOR REINFORCING STEEL WHERE INDICATED ON THE PLANS. WHEN BAR SUPPORT PIECES ARE PLACED IN CONTINUOUS LINES, THEY SHALL BE SO PLACED THAT THE ENDS OF THE SUPPORTING WIRES SHALL BE LAPPED TO LOCK LEGS ON ADJOINING PIECES.

STRUCTURAL STEEL:

AT THE CONTRACTOR'S OPTION, HE MAY SUBSTITUTE 7/8" Ø SHEAR STUDS FOR THE 3/4" Ø STUDS SPECIFIED ON THE PLANS. THIS SUBSTITUTION SHALL BE MADE AT THE RATE OF 3 - 7/8" Ø STUDS FOR 4 - 3/4" Ø STUDS, AND STUD SPACING CHANGES SHALL BE MADE AS NECESSARY TO PROVIDE THE SAME EQUIVALENT NUMBER OF 7/8" Ø STUDS ALONG THE BEAM AS SHOWN FOR 3/4" Ø STUDS BASED ON THE RATIO OF 3 - 7/8" Ø STUDS FOR 4 - 3/4" Ø STUDS. STUDS OF THE LENGTH SPECIFIED ON THE PLANS MUST BE PROVIDED. THE MAXIMUM SPACING SHALL BE 2'-0".

EXCEPT AT THE INTERIOR SUPPORTS OF CONTINUOUS BEAMS WHERE THE COVER PLATE IS IN CONTACT WITH BEARING PLATE, THE CONTRACTOR MAY, AT HIS OPTION, SUBSTITUTE FOR THE COVER PLATES DESIGNATED ON THE PLANS COVER PLATES OF THE EQUIVALENT AREA PROVIDED THESE PLATES ARE AT LEAST 5/16" IN THICKNESS AND DO NOT EXCEED A WIDTH EQUAL TO THE FLANGE WIDTH LESS 2" OR A THICKNESS EQUAL TO 2 TIMES THE FLANGE THICKNESS. THE SIZE OF FILLET WELDS SHALL CONFORM TO THE REQUIREMENTS OF THE CURRENT ANSI/AASHTO/AWS "BRIDGE WELDING CODE". ELECTROSLAG WELDING WILL NOT BE PERMITTED.

WITH THE SOLE EXCEPTION OF EDGES AT SURFACES WHICH BEAR ON OTHER SURFACES, ALL SHARP EDGES AND ENDS OF SHAPES AND PLATES SHALL BE SLIGHTLY ROUNDED BY SUITABLE MEANS TO A RADIUS OF APPROXIMATELY 1/16 INCH OR EQUIVALENT FLAT SURFACE AT A SUITABLE ANGLE PRIOR TO PAINTING, GALVANIZING, OR METALLIZING.

HANDRAILS AND POSTS:

METAL STANDARDS AND FACES OF THE CONCRETE END POSTS FOR THE METAL RAIL SHALL BE SET NORMAL TO THE GRADE OF THE CURB, UNLESS OTHERWISE SHOWN ON PLANS. THE METAL RAIL AND TOPS OF CONCRETE POSTS USED WITH THE ALUMINUM RAIL SHALL BE BUILT PARALLEL TO THE GRADE OF THE CURB.

METAL HANDRAILS SHALL BE IN ACCORDANCE WITH THE PLANS. RAILS SHALL BE AS MANUFACTURED FOR BRIDGE RAILING. CASTINGS SHALL BE OF A UNIFORM APPEARANCE. FINS AND OTHER DEFORMATIONS RESULTING FROM CASTING OR OTHERWISE SHALL BE REMOVED IN A MANNER SO THAT A UNIFORM COLORING OF THE COMPLETED CASTING SHALL BE OBTAINED. CASTINGS WITH DISCOLORATIONS OR OF NON-UNIFORM COLORING WILL NOT BE ACCEPTED. CERTIFIED MILL REPORTS ARE REQUIRED FOR METAL RAILS AND POSTS.

SPECIAL NOTES:

GENERALLY, IN CASE OF DISCREPANCY, THIS STANDARD SHEET OF NOTES SHALL GOVERN OVER THE SPECIFICATIONS, BUT THE REMAINDER OF THE PLANS SHALL GOVERN OVER NOTES HEREON, AND SPECIAL PROVISIONS SHALL GOVERN OVER ALL. SEE SPECIFICATIONS ARTICLE 105-4.

ENGLISH

JANUARY, 1990

STD. NO. SN