F.A. PROJECT NO. BRZ-1716 (3)

BD-5111W

BRIDGE NO. 2 YADKIN COUNTY

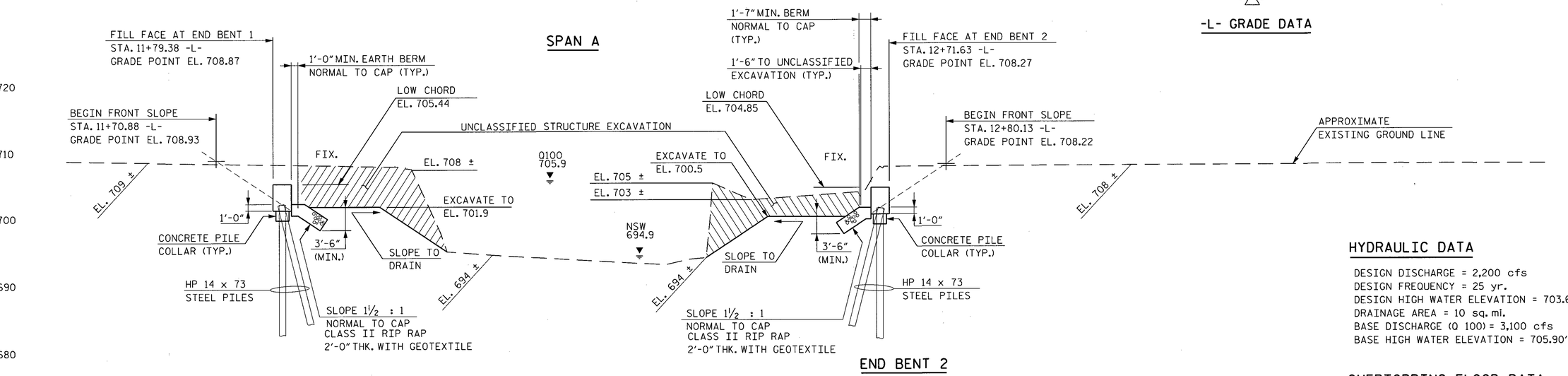

PVI = 13+20 -L-
EL. = 707.96
V.C. = 90'
(-)0.6500% (+)0.3417%

-L- GRADE DATA

HYDRAULIC DATA

DESIGN DISCHARGE = 2,200 cfs
DESIGN FREQUENCY = 25 yr.
DESIGN HIGH WATER ELEVATION = 703.6'
DRAINAGE AREA = 10 sq. mi.
BASE DISCHARGE (Q 100) = 3,100 cfs
BASE HIGH WATER ELEVATION = 705.90'

OVERTOPPING FLOOD DATA

FREQUENCY = 500 yr. ±
DISCHARGE = 4,175 cfs
EL. = 707.0'

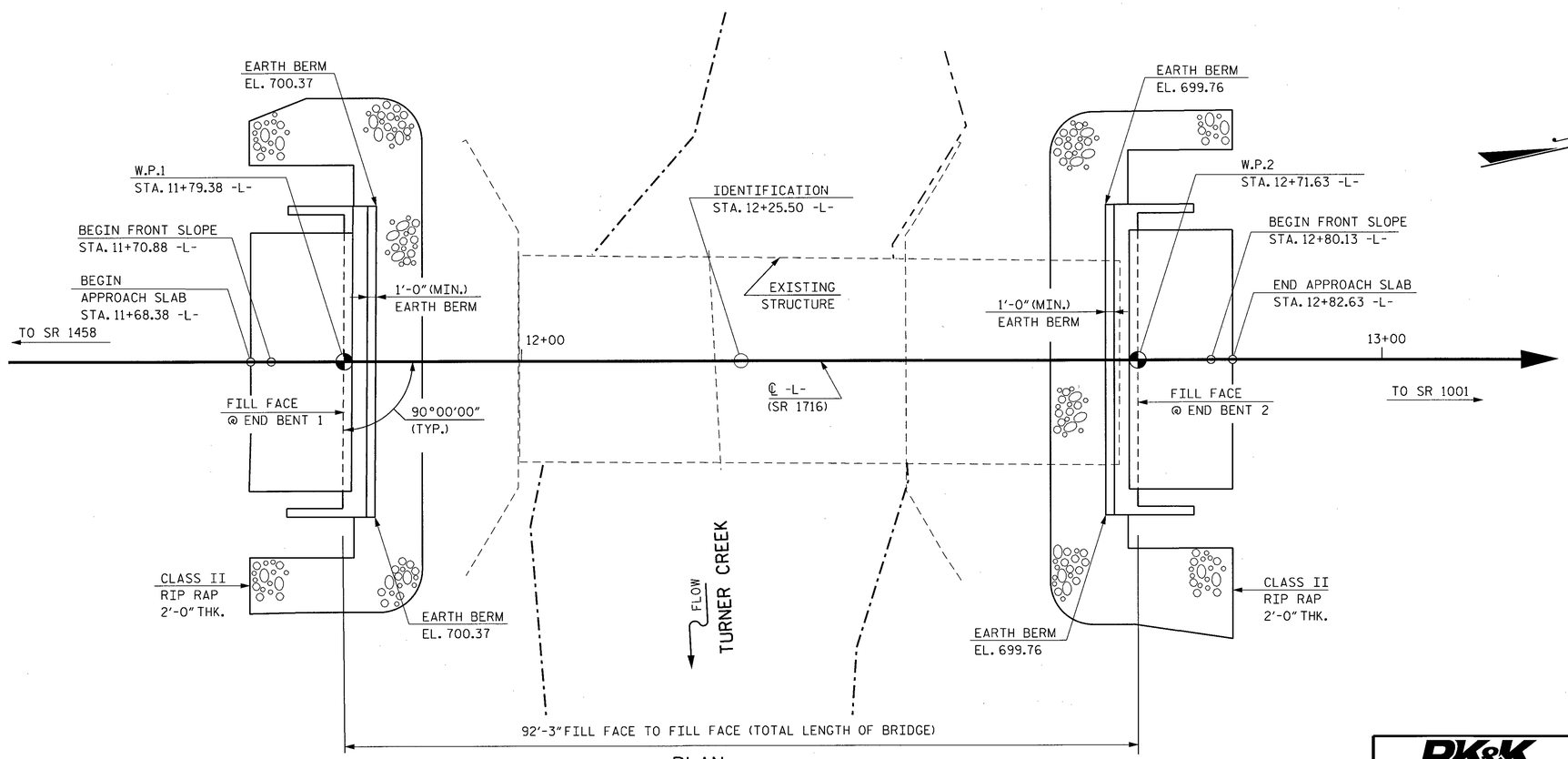

PLAN

PILES NOT SHOWN IN PLAN VIEW FOR CLARITY

I HEREBY CERTIFY THESE PLANS ARE THE AS-BUILT PLANS

PROJECT NO. BD-5111W
YADKIN COUNTY
STATION: STA. 12+25.50 -L-

SHEET 1 OF 3 REPLACES BRIDGE NO. 2

STATE OF NORTH CAROLINA
DEPARTMENT OF TRANSPORTATION
RALEIGH
GENERAL DRAWING
FOR BRIDGE OVER TURNER CREEK
ON SR 1716 (FARMINGTON ROAD)
BETWEEN SR 1458 (SPILLMAN RD.)
AND
SR 1001 (COURTNEY-HUNTSVILLE RD.)

DWG. NO. 1

RK&K
RUMMEL, KLEPPER & KAHL, LLP
900 RIDGEFIELD DRIVE SUITE 350
RALEIGH, NORTH CAROLINA 27609-3960
NC LICENSE NUMBER: F-0112

NORTH CAROLINA PROFESSIONAL SEAL 19968 ENGINEER RICKY V. KEITH
3/19/2014

REVISIONS						SHEET NO.
NO.	BY:	DATE:	NO.	BY:	DATE:	S-1
1			3			TOTAL SHEETS
2			4			15

DRAWN BY : F.D. WEEDEN DATE : MAR. 2014
CHECKED BY : R.V. KEITH DATE : MAR. 2014

M:\projects\2009\09085_NCDOT_Div_OnCall\P01_Div11Bridges_GRP4\BD5111W_Yadkin2\Design\Structures\DGN\GENERAL_W.dgn

TOTAL BILL OF MATERIALS

	REMOVAL OF EXISTING STRUCTURE	UNCLASSIFIED STRUCTURE EXCAVATION	CLASS A CONCRETE	BRIDGE APPROACH SLABS	REINFORCING STEEL	HP 14 X 73 STEEL PILES		VERTICAL CONCRETE BARRIER RAIL	RIP RAP CLASS II (2'-0" THICK)	GEOTEXTILE FOR DRAINAGE	ELASTOMERIC BEARINGS	3'-0" X 2'-9" PRESTRESSED CONCRETE BOX BEAMS	
	LUMP SUM	LUMP SUM	CU. YDS.	LUMP SUM	LBS.	NO.	LIN. FT.	LIN. FT.	TONS	SQ. YDS.	LUMP SUM	NO.	LIN. FT.
SUPERSTRUCTURE				LUMP SUM				180.00				10	900.0
END BENT NO. 1		LUMP SUM	24.0		3,361	5	100.0		75	80			
END BENT NO. 2		LUMP SUM	24.0		3,361	5	140.0		70	75			
TOTAL	LUMP SUM	LUMP SUM	48.0	LUMP SUM	6,722	10	240.0	180.00	145	155	LUMP SUM	10	900.0

BENCH MARK : BM#1, ON -L- STA. 12+77.24, 16.95 LT. ELEV. 707.1537'

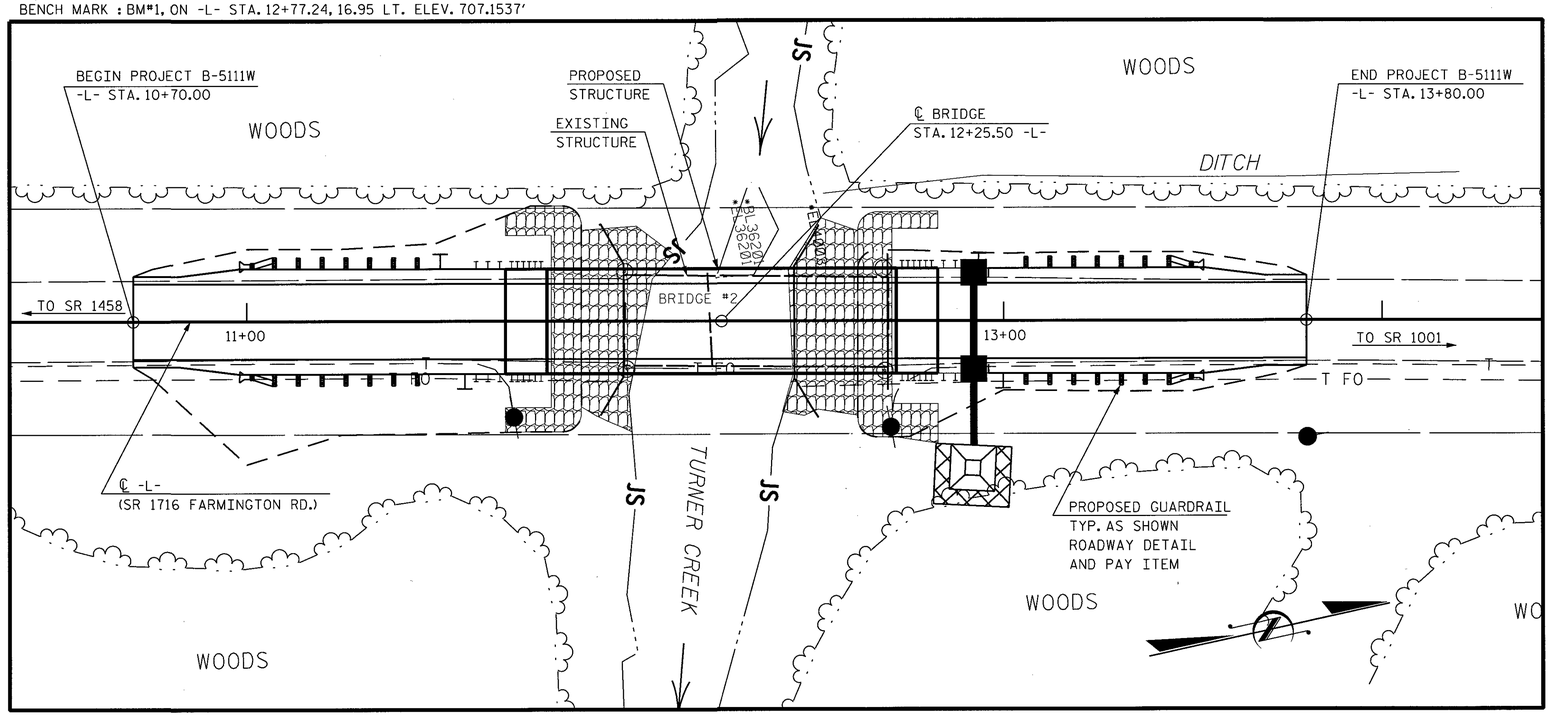

FOR UTILITY INFORMATION,
SEE UTILITY PLANS AND SPECIAL PROVISIONS

LOCATION SKETCH

PROJECT NO. BD-5111W
YADKIN COUNTY
STATION: STA. 12+25.50 -L-

SHEET 2 OF 3

STATE OF NORTH CAROLINA
DEPARTMENT OF TRANSPORTATION
RALEIGH
GENERAL DRAWING
FOR BRIDGE OVER TURNER CREEK
ON SR 1716 (FARMINGTON ROAD)
BETWEEN SR 1458 (SPILLMAN RD.)
AND
SR 1001 (COURTNEY-HUNTSVILLE RD.)

DWG. NO. 2

NORTH CAROLINA PROFESSIONAL SEAL 0966 ENGINEER RICKY V. KEITH
3/19/2014

RK&K
RUMMEL, KLEPPER & KAHL, LLP
900 RIDGEFIELD DRIVE SUITE 350
RALEIGH, NORTH CAROLINA 27609-3960
NC LICENSE NUMBER: F-0112

REVISIONS						SHEET NO.
NO.	BY:	DATE:	NO.	BY:	DATE:	S-2
1			3			TOTAL SHEETS
2			4			15

DRAWN BY : F.D. WEEDEN DATE : MAR. 2014
CHECKED BY : R.V. KEITH DATE : MAR. 2014

M:\projects\2009\09085_NCDOT_Div_OnCall\P01_Div11Bridges_GRP4\BD5111W_Yadkin2\Design\Structures\DGN\TYPLOCL_W.dgn

NOTES:

ASSUMED LIVE LOAD = HL-93 OR ALTERNATE LOADING.

FOR OTHER DESIGN DATA AND GENERAL NOTES, SEE SHEET SN.

FOR EROSION CONTROL MEASURES, SEE EROSION CONTROL PLANS.

THIS BRIDGE HAS BEEN DESIGNED IN ACCORDANCE WITH THE AASHTO LRFD BRIDGE DESIGN SPECIFICATIONS.

THIS BRIDGE IS LOCATED IN SEISMIC ZONE 1.

THE EXISTING STRUCTURE CONSISTING OF 3 SPANS, 1 @ 23'-0" 1 @ 22'-2", AND 1 @ 25'-3" WITH AN ASPHALT WEARING SURFACE OVER A STEEL PLANK FLOOR ON I-BEAM SUPERSTRUCTURE AND A CLEAR ROADWAY WIDTH OF 24.2' ON A SUBSTRUCTURE CONSISTING OF TIMBER POSTS AND SILLS AND STEEL CAPS ON H PILES LOCATED AT THE PROPOSED STRUCTURE LOCATION SHALL BE REMOVED. SEE SPECIAL PROVISION FOR "REMOVAL OF EXISTING STRUCTURE AT STA. 12+25.50 -L-".

REMOVAL OF THE EXISTING BRIDGE SHALL BE PERFORMED SO AS NOT TO ALLOW DEBRIS TO FALL INTO THE WATER. THE CONTRACTOR SHALL REMOVE THE BRIDGE AND SUBMIT PLANS FOR DEMOLITION IN ACCORDANCE WITH ARTICLE 402-2 OF THE STANDARD SPECIFICATIONS.

THE MATERIAL SHOWN IN THE CROSS-HATCHED AREA SHALL BE EXCAVATED FOR A DISTANCE OF 30 FEET EACH SIDE OF CENTERLINE ROADWAY AS DIRECTED BY THE ENGINEER. THIS WORK WILL BE PAID FOR AT THE CONTRACT LUMP SUM PRICE FOR UNCLASSIFIED STRUCTURE EXCAVATION. SEE SECTION 412 OF THE STANDARD SPECIFICATIONS.

THE SUBSTRUCTURE OF THE EXISTING BRIDGE INDICATED ON THE PLANS IS FROM THE BEST INFORMATION AVAILABLE. SINCE THIS INFORMATION IS SHOWN FOR THE CONVENIENCE OF THE CONTRACTOR, THE CONTRACTOR SHALL HAVE NO CLAIM WHATSOEVER AGAINST THE DEPARTMENT OF TRANSPORTATION FOR ANY DELAYS OR ADDITIONAL COST INCURRED BASED ON DIFFERENCES BETWEEN THE EXISTING BRIDGE SUBSTRUCTURE SHOWN ON THE PLANS AND THE ACTUAL CONDITIONS AT THE PROJECT SITE.

ASPHALT WEARING SURFACE IS INCLUDED IN ROADWAY QUANTITY ON ROADWAY PLANS.

THIS STRUCTURE HAS BEEN DESIGNED IN ACCORDANCE WITH HEC 18, "EVALUATING SCOUR AT BRIDGES".

THE CONTRACTOR SHALL PROVIDE INDEPENDENT ASSURANCE SAMPLES OF REINFORCING STEEL AS FOLLOWS: FOR PROJECTS REQUIRING UP TO 400 TONS OF REINFORCING STEEL, ONE 30 INCH SAMPLE OF EACH SIZE BAR USED, AND FOR PROJECTS REQUIRING OVER 400 TONS OF REINFORCING STEEL, TWO 30 INCH SAMPLES OF EACH SIZE BAR USED. THE BARS FROM WHICH THE SAMPLES ARE TAKEN MUST THEN BE SPLICED WITH REPLACEMENT BARS OF THE SIZE AND LENGTH OF THE SAMPLE PLUS A MINIMUM LAP SPLICE OF THIRTY BAR DIAMETERS. PAYMENT FOR THE SAMPLES OF REINFORCING STEEL SHALL BE CONSIDERED INCIDENTAL TO VARIOUS PAY ITEMS.

INASMUCH AS THE PAINT SYSTEM ON THE EXISTING STRUCTURAL STEEL CONTAINS LEAD, THE CONTRACTOR'S ATTENTION IS DIRECTED TO ARTICLE 107-1 OF THE STANDARD SPECIFICATIONS. ANY COSTS RESULTING FROM COMPLIANCE WITH APPLICABLE STATE OR FEDERAL REGULATIONS PERTAINING TO HANDLING OF MATERIALS CONTAINING LEAD BASED PAINT SHALL BE INCLUDED IN THE BID PRICE FOR "REMOVAL OF EXISTING STRUCTURE AT STATION 12+25.50 -L-".

FOR SUBMITTAL OF WORKING DRAWINGS, SEE SPECIAL PROVISIONS.

FOR FALSEWORK AND FORMWORK, SEE SPECIAL PROVISIONS.

FOR CRANE SAFETY, SEE SPECIAL PROVISIONS.

FOR GROUT FOR STRUCTURES, SEE SPECIAL PROVISIONS.

FOUNDATION NOTES:

FOR PILES, SEE SECTION 450 OF THE STANDARD SPECIFICATIONS.

PILES AT END BENT NO. 1 ARE DESIGNED FOR A FACTORED RESISTANCE OF 130 TONS PER PILE.

DRIVE PILES AT END BENT NO. 1 TO A REQUIRED DRIVING RESISTANCE OF 220 TONS PER PILE.

PILES AT END BENT NO. 2 ARE DESIGNED FOR A FACTORED RESISTANCE OF 130 TONS PER PILE.

DRIVE PILES AT END BENT NO. 2 TO A REQUIRED DRIVING RESISTANCE OF 220 TONS PER PILE.

PROJECT NO. BD-5111W

YADKIN COUNTY

STATION: STA. 12+25.50 -L-

SHEET 3 OF 3

STATE OF NORTH CAROLINA
DEPARTMENT OF TRANSPORTATION
RALEIGH

GENERAL DRAWING
FOR BRIDGE OVER TURNER CREEK
ON SR 1716 (FARMINGTON ROAD)
BETWEEN SR 1458 (SPILLMAN RD.)
AND
SR 1001 (COURTNEY-HUNTSVILLE RD.)

DWG. NO. 2A

NORTH CAROLINA PROFESSIONAL SEAL 10966 ENGINEER RICKY V. KEITH
3/11/14

RK&K
RUMMEL, KLEPPER & KAHL, LLP
900 RIDGEFIELD DRIVE SUITE 350
RALEIGH, NORTH CAROLINA 27609-3960
NC LICENSE NUMBER: F-0112

REVISIONS								SHEET NO.
NO.	BY:	DATE:	NO.	BY:	DATE:			S-2A
1			3					TOTAL SHEETS
2			4					15

DRAWN BY : F.D. WEEDEN DATE : MAR. 2014
CHECKED BY : R.V. KEITH DATE : MAR. 2014

M:\projects\2009\09085_NCDOT_Div_OnCall\P01_Div11Bridges_GRP4\BD5111W_Yadkin2\Design\Structures\DGN\TYPLOCL_W.dgn

LOAD AND RESISTANCE FACTOR RATING (LRFR) SUMMARY FOR PRESTRESSED CONCRETE GIRDERS

LEVEL		VEHICLE	WEIGHT (W) (TONS)	CONTROLLING LOAD RATING	MINIMUM RATING FACTORS (RF)	TONS = W X RF	STRENGTH I LIMIT STATE											SERVICE III LIMIT STATE						COMMENT NUMBER
								MOMENT					SHEAR						MOMENT					
							LIVELOAD FACTORS	DISTRIBUTION FACTORS (DF)	RATING FACTOR	SPAN	GIRDER LOCATION	DISTANCE FROM LEFT END OF SPAN (ft)	DISTRIBUTION FACTORS (DF)	RATING FACTOR	SPAN	GIRDER LOCATION	DISTANCE FROM LEFT END OF SPAN (ft)	LIVELOAD FACTORS	DISTRIBUTION FACTORS (DF)	RATING FACTOR	SPAN	GIRDER LOCATION	DISTANCE FROM LEFT END OF SPAN (ft)	
DESIGN LOAD RATING		HL-93(Inv)	N/A	1	1.109	--	1.75	0.272	1.47	A	EL	44.25	0.493	1.26	A	EL	4.425	0.80	0.272	**1.11**	A	EL	**44.25**	
		HL-93(Opr)	N/A	--	1.633	--	1.35	0.272	1.9	A	EL	44.25	0.493	1.63	A	EL	4.425	N/A	--	--	--	--	--	
		HS-20(Inv)	36.000	2	1.507	54.255	1.75	0.272	1.99	A	EL	44.25	0.493	1.65	A	EL	4.425	0.80	0.272	**1.51**	A	EL	**44.25**	
		HS-20(Opr)	36.000	--	2.14	77.039	1.35	0.272	2.59	A	EL	44.25	0.493	2.14	A	EL	4.425	N/A	--	--	--	--	--	
LEGAL LOAD RATING	SV	SNSH	13.500	--	3.519	47.501	1.4	0.272	5.82	A	EL	44.25	0.493	5.05	A	EL	4.425	0.80	0.272	3.52	A	EL	44.25	
		SNGARBS2	20.000	--	2.572	51.43	1.4	0.272	4.25	A	EL	44.25	0.493	3.55	A	EL	4.425	0.80	0.272	2.57	A	EL	44.25	
		SNAGRIS2	22.000	--	2.415	53.122	1.4	0.272	4	A	EL	44.25	0.493	3.27	A	EL	4.425	0.80	0.272	2.41	A	EL	44.25	
		SNCOTTS3	27.250	--	1.749	47.674	1.4	0.272	2.89	A	EL	44.25	0.493	2.52	A	EL	4.425	0.80	0.272	1.75	A	EL	44.25	
		SNAGGRS4	34.925	--	1.443	50.381	1.4	0.272	2.39	A	EL	44.25	0.493	2.06	A	EL	4.425	0.80	0.272	1.44	A	EL	44.25	
		SNS5A	35.550	--	1.412	50.195	1.4	0.272	2.34	A	EL	44.25	0.493	2.07	A	EL	4.425	0.80	0.272	1.41	A	EL	44.25	
		SNS6A	39.950	--	1.287	51.435	1.4	0.272	2.13	A	EL	44.25	0.493	1.88	A	EL	4.425	0.80	0.272	1.29	A	EL	44.25	
		SNS7B	42.000	--	1.226	51.483	1.4	0.272	2.03	A	EL	44.25	0.493	1.83	A	EL	4.425	0.80	0.272	1.23	A	EL	44.25	
	TTST	TNAGRIT3	33.000	--	1.568	51.733	1.4	0.272	2.59	A	EL	44.25	0.493	2.24	A	EL	4.425	0.80	0.272	1.57	A	EL	44.25	
		TNT4A	33.075	--	1.572	52.007	1.4	0.272	2.6	A	EL	44.25	0.493	2.2	A	EL	4.425	0.80	0.272	1.57	A	EL	44.25	
		TNT6A	41.600	--	1.278	53.17	1.4	0.272	2.11	A	EL	44.25	0.493	1.92	A	EL	4.425	0.80	0.272	1.28	A	EL	44.25	
		TNT7A	42.000	--	1.281	53.782	1.4	0.272	2.12	A	EL	44.25	0.493	1.89	A	EL	4.425	0.80	0.272	1.28	A	EL	44.25	
		TNT7B	42.000	--	1.315	55.229	1.4	0.272	2.18	A	EL	44.25	0.493	1.79	A	EL	4.425	0.80	0.272	1.31	A	EL	44.25	
		TNAGRIT4	43.000	--	1.258	54.101	1.4	0.272	2.08	A	EL	44.25	0.493	1.74	A	EL	4.425	0.80	0.272	1.26	A	EL	44.25	
		TNAGT5A	45.000	--	1.19	53.537	1.4	0.272	1.97	A	EL	44.25	0.493	1.71	A	EL	4.425	0.80	0.272	1.19	A	EL	44.25	
		TNAGT5B	45.000	3	1.178	53.027	1.4	0.272	1.95	A	EL	44.25	0.493	1.66	A	EL	4.425	0.80	0.272	**1.18**	A	EL	**44.25**	

LOAD FACTORS:

	LIMIT STATE	γ_{DC}	γ_{DW}
DESIGN LOAD RATING FACTORS	STRENGTH I	1.25	1.50
	SERVICE III	1.00	1.00

NOTES:

MINIMUM RATING FACTORS ARE BASED ON THE STRENGTH I AND SERVICE III LIMIT STATES.

ALLOWABLE STRESSES FOR SERVICE III LIMIT STATE ARE AS REQUIRED FOR DESIGN.

COMMENTS:

1.
2.
3.
4.

(#) CONTROLLING LOAD RATING

(1) DESIGN LOAD RATING (HL-93)
(2) DESIGN LOAD RATING (HS-20)
(3) LEGAL LOAD RATING **
** SEE CHART FOR VEHICLE TYPE

GIRDER LOCATION

I - INTERIOR GIRDER
EL - EXTERIOR LEFT GIRDER
ER - EXTERIOR RIGHT GIRDER

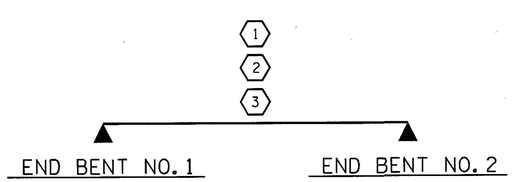

LRFR SUMMARY

PROJECT NO. BD-5111W
YADKIN COUNTY
STATION: 12+25.50 -L-

STATE OF NORTH CAROLINA
DEPARTMENT OF TRANSPORTATION
RALEIGH

STANDARD
LRFR SUMMARY FOR 90' BOX BEAM UNIT 90° SKEW
(NON-INTERSTATE TRAFFIC)

NORTH CAROLINA PROFESSIONAL SEAL 19825 ENGINEER BRYCE D. KLAPPENBACH 2-27-2014

REVISIONS								SHEET NO.
NO.	BY:	DATE:	NO.	BY:	DATE:			S-3
1			3					TOTAL SHEETS
2			4					15

ASSEMBLED BY :	R.Z. DEAN	DATE :	12/2013
CHECKED BY :	H.T. BARBOUR	DATE :	1-13-14
DRAWN BY :	TMG II/11		
CHECKED BY :	AAC II/11		

24-FEB-2014 12:05
R:\Structures\Plans\rdean\BD5111W_SD_LRFD.dgn
bklappenbach

STD. NO. 33LRFR1_90S_90L

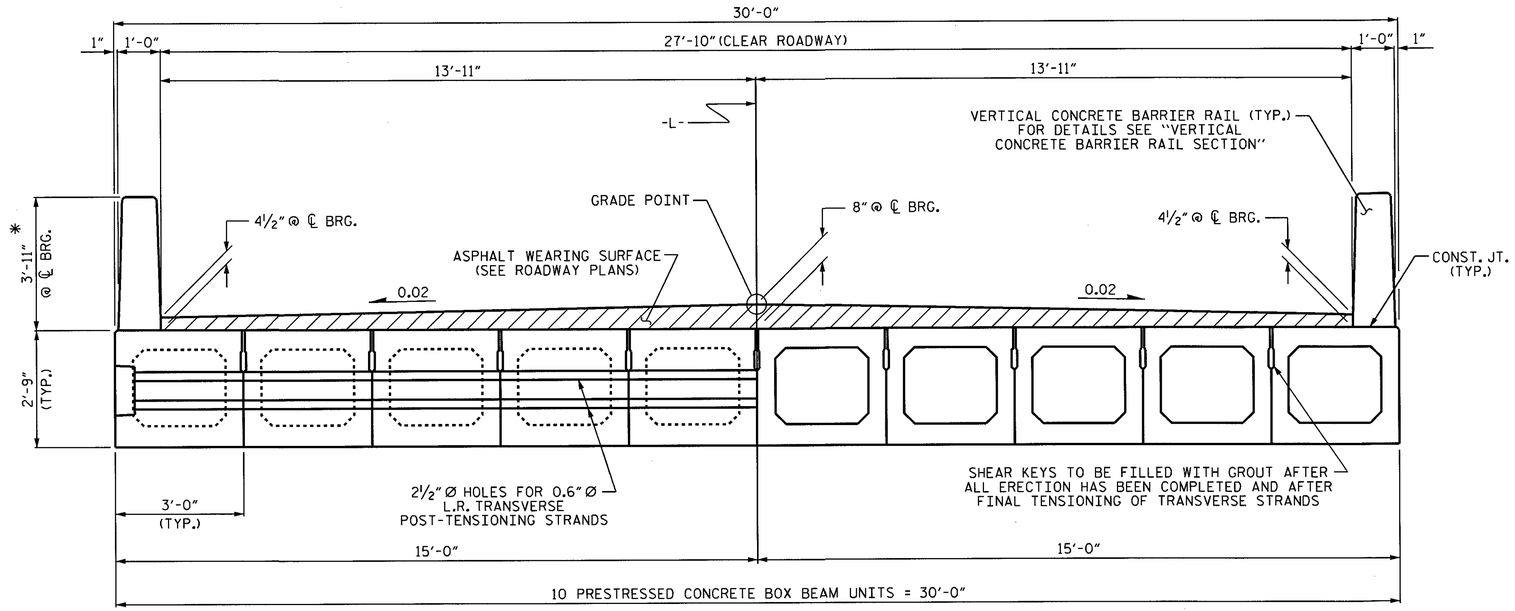

HALF SECTION
AT INTERMEDIATE DIAPHRAGMS

HALF SECTION
THROUGH VOIDS

TYPICAL SECTION

*THE MAXIMUM BARRIER RAIL HEIGHT AND ASPHALT THICKNESS IS SHOWN. THE HEIGHT OF THE BARRIER RAIL AND ASPHALT THICKNESS VARIES WHILE THE TOP OF THE BARRIER RAIL FOLLOWS THE PROFILE OF THE GUTTERLINE. FOR RAIL HEIGHT DETAILS AND ASPHALT THICKNESS, SEE THE "VERTICAL CONCRETE BARRIER RAIL SECTION" DETAIL.

FIXED END

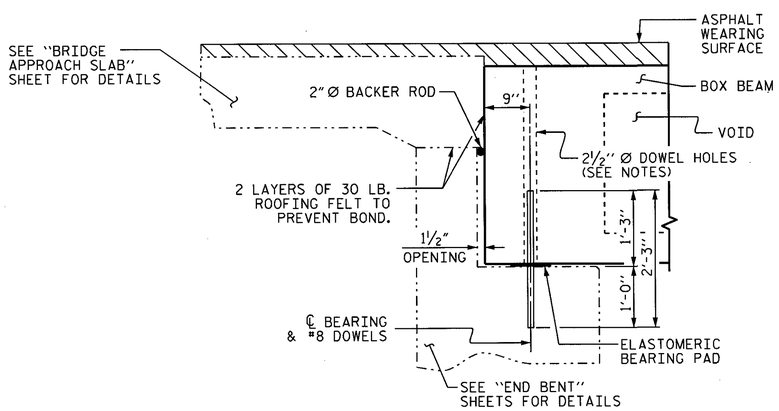

SECTION AT END BENT

NOTES

ALL PRESTRESSING STRANDS SHALL BE 7-WIRE LOW RELAXATION GRADE 270 STRANDS AND SHALL CONFORM TO AASHTO M203 EXCEPT FOR SAMPLING REQUIREMENTS WHICH SHALL BE IN ACCORDANCE WITH THE STANDARD SPECIFICATIONS.

ALL REINFORCING STEEL CAST WITH THE BOX BEAM SECTIONS SHALL BE GRADE 60 AND SHALL BE INCLUDED IN THE UNIT PRICE BID FOR PRESTRESSED CONCRETE BOX BEAMS.

RECESSES FOR TRANSVERSE STRANDS SHALL BE GROUTED AFTER THE TENSIONING OF THE STRANDS.

THE 2½" Ø DOWEL HOLES AT FIXED ENDS OF BOX BEAM SECTIONS SHALL BE FILLED WITH NON-SHRINK GROUT.

THE BACKER RODS SHALL CONFORM TO THE REQUIREMENTS OF TYPE M BOND BREAKER. SEE SECTION 1028 OF THE STANDARD SPECIFICATIONS.

THE TRANSFER OF LOAD FROM THE ANCHORAGES TO THE BOX BEAM UNIT SHALL BE DONE WHEN THE CONCRETE HAS REACHED A COMPRESSIVE STRENGTH OF NOT LESS THAN 6000 PSI.

ALL REINFORCING STEEL IN VERTICAL CONCRETE BARRIER RAILS SHALL BE EPOXY COATED.

PRESTRESSING STRANDS SHALL BE CUT FLUSH WITH THE BOX BEAM UNIT ENDS.

APPLY EPOXY PROTECTIVE COATING TO BOX BEAM UNIT ENDS.

VERTICAL GROOVED CONTRACTION JOINTS, ½" IN DEPTH, SHALL BE TOOLED IN ALL EXPOSED FACES OF THE BARRIER RAIL AND IN ACCORDANCE WITH ARTICLE 825-10(B) OF THE STANDARD SPECIFICATIONS. A VERTICAL CONTRACTION JOINT SHALL BE LOCATED AT EACH THIRD POINT BETWEEN BARRIER RAIL EXPANSION JOINTS. ONLY ONE CONTRACTION JOINT IS REQUIRED AT MIDPOINT OF BARRIER RAIL SEGMENTS LESS THAN 20 FEET IN LENGTH AND NO CONTRACTION JOINTS ARE REQUIRED FOR THOSE SEGMENTS LESS THAN 10 FEET IN LENGTH.

THE LOCATION OF THE VOID DRAINS MAY BE SHIFTED SLIGHTLY WHERE NECESSARY TO CLEAR PRESTRESSING STRANDS OR TRANSVERSE REINFORCING STEEL.

FOR GROUT FOR STRUCTURES, SEE SPECIAL PROVISIONS.

PROJECT NO. BD-5111W
YADKIN COUNTY
STATION: 12+25.50 -L-

SHEET 1 OF 5

STATE OF NORTH CAROLINA
DEPARTMENT OF TRANSPORTATION
RALEIGH

STANDARD

3'-0" X 2'-9"
PRESTRESSED CONCRETE
BOX BEAM UNIT

NORTH CAROLINA PROFESSIONAL SEAL 15825 ENGINEER BRUCE D. KLAPPENBACH
2-27-2014

REVISIONS						SHEET NO.
NO.	BY:	DATE:	NO.	BY:	DATE:	S-4
1			3			TOTAL SHEETS
2			4			15

ASSEMBLED BY : R.Z.DEAN	DATE : 12/2013
CHECKED BY : H.T. BARBOUR	DATE : 1-13-14
DRAWN BY : DGE 8/11	
CHECKED BY : TMG 11/11	

24-FEB-2014 12:05
R:\Structures\rdean\BD5111W_SD_BX.dgn
bklappenbach

STD. NO. STD.33PCBB1_30

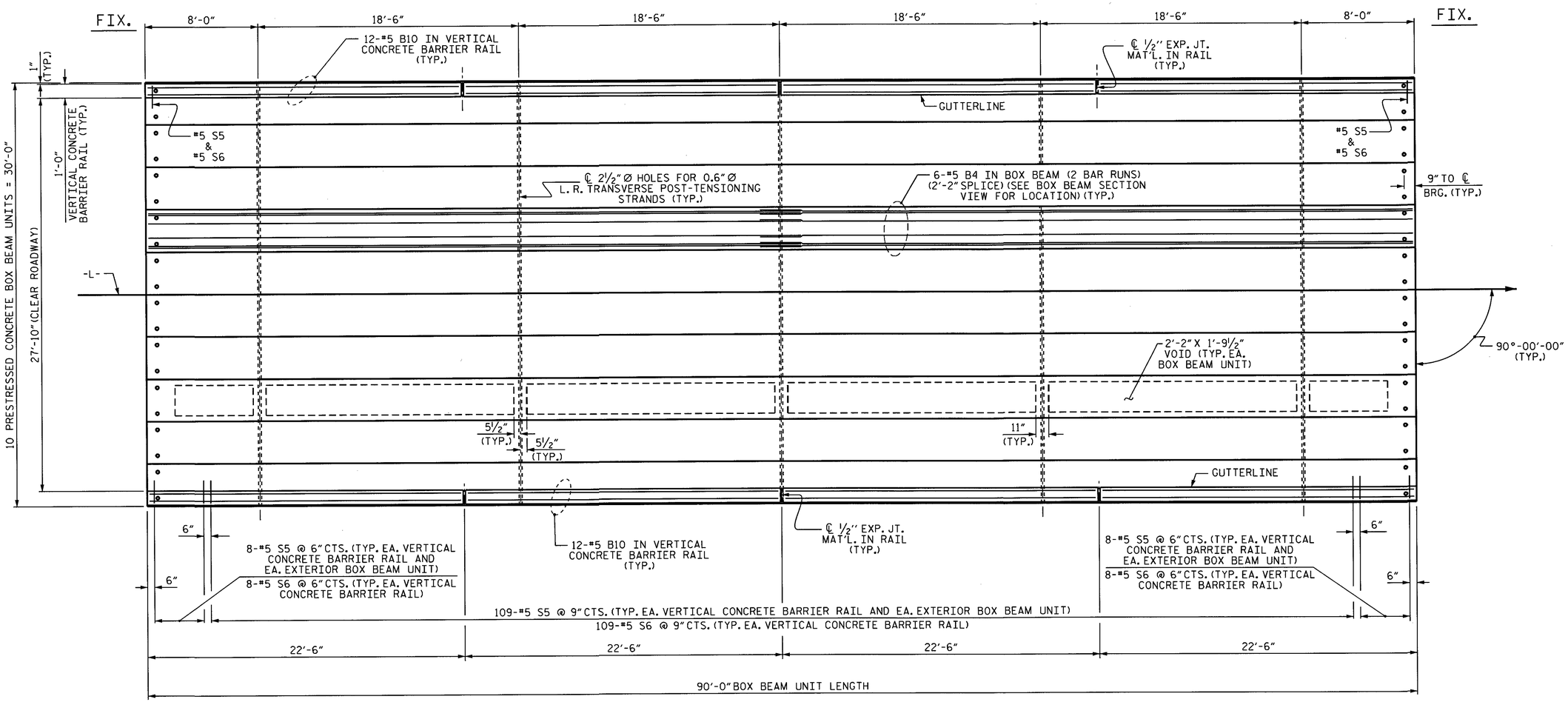

PLAN OF UNIT

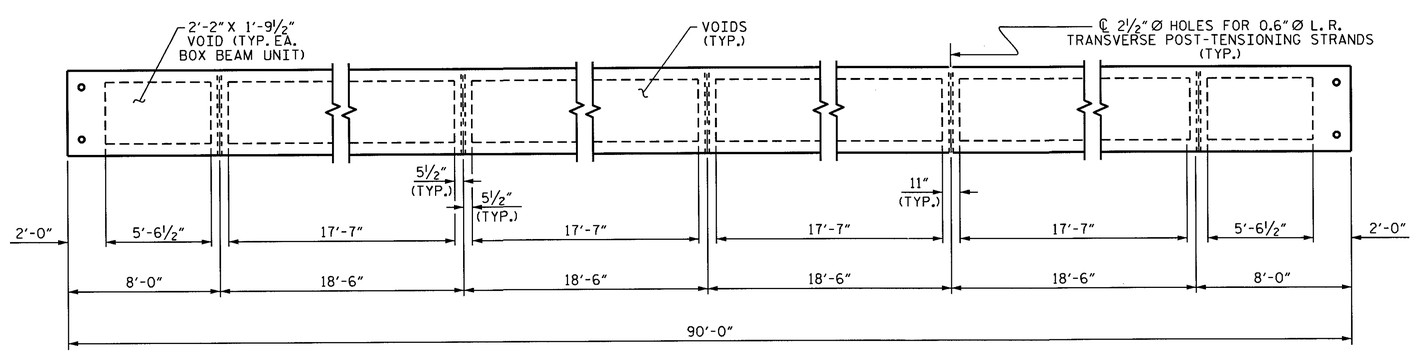

DIAPHRAGM AND VOID LAYOUT

PROJECT NO. BD-5111W

YADKIN COUNTY

STATION: 12+25.50 -L-

SHEET 2 OF 5

STATE OF NORTH CAROLINA
DEPARTMENT OF TRANSPORTATION
RALEIGH

PLAN OF 90' UNIT
27'-10" CLEAR ROADWAY
90° SKEW

NORTH CAROLINA PROFESSIONAL SEAL 15825 ENGINEER BRUCE O. KLAPPENBACH
2-27-2014

REVISIONS						SHEET NO.
NO.	BY:	DATE:	NO.	BY:	DATE:	S-5
1			3			TOTAL SHEETS
2			4			15

ASSEMBLED BY :	R.Z. DEAN	DATE :	12/2013
CHECKED BY :	H.T. BARBOUR	DATE :	1-13-14
DRAWN BY :	DGE 8/10		
CHECKED BY :	TMG 11/11		

24-FEB-2014 12:05
R:\Structures\Plans\rdean\BD5111W_SD_BX.dgn
bklappenbach

STD.NO.33PCBB_30_90S_90L

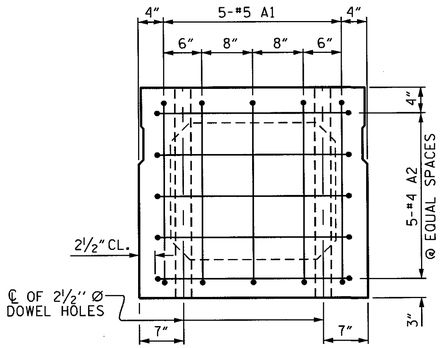

END ELEVATION

SHOWING PLACEMENT OF #5 & #4 "A" BARS AND LOCATION OF DOWEL HOLES. (INTERIOR BOX BEAM SECTION SHOWN-EXTERIOR SECTION SIMILAR EXCEPT SHEAR KEY LOCATION. STRAND LAYOUT NOT SHOWN.)

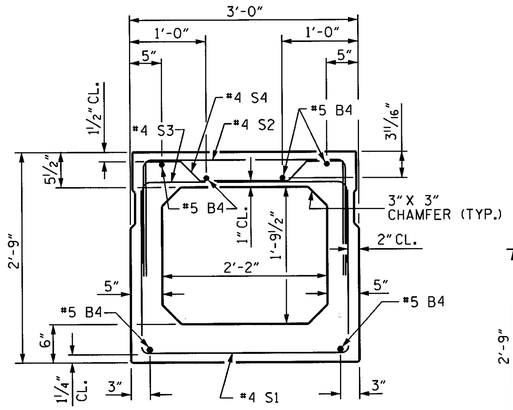

INTERIOR BOX BEAM SECTION

(STRAND LAYOUT NOT SHOWN)

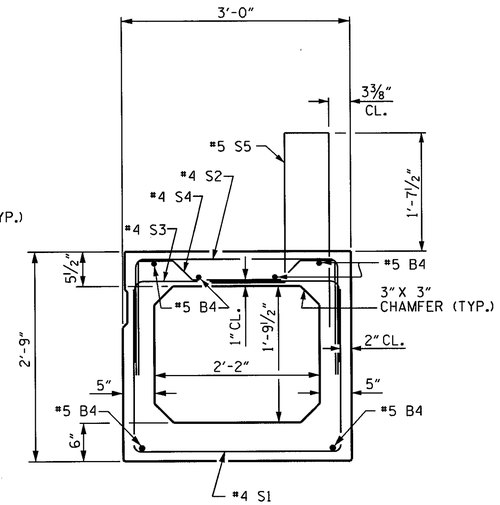

EXTERIOR BOX BEAM SECTION

(STRAND LAYOUT NOT SHOWN)

0.6" Ø LOW RELAXATION STRAND LAYOUT

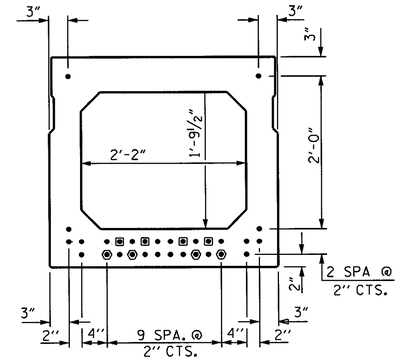

TYPICAL STRAND LOCATION

(30 STRANDS REQUIRED)

DEBONDING LEGEND

- ● FULLY BONDED STRANDS
- ▣ STRANDS DEBONDED FOR 4'-0" FROM END OF GIRDER
- ⬢ STRANDS DEBONDED FOR 12'-0" FROM END OF GIRDER

BOND SHALL BE BROKEN ON STRANDS AS SHOWN FOR THE SPECIFIED LENGTH FROM EACH END OF THE BOX BEAM. SEE STANDARD SPECIFICATIONS ARTICLE 1078-7.

BAR TYPES

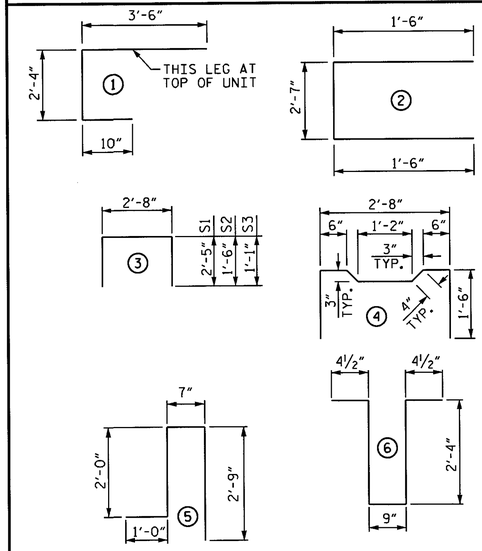

ALL BAR DIMENSIONS ARE OUT TO OUT

BILL OF MATERIAL FOR ONE BOX BEAM SECTION

				EXTERIOR UNIT		INTERIOR UNIT	
BAR	NUMBER	SIZE	TYPE	LENGTH	WEIGHT	LENGTH	WEIGHT
A1	10	#5	1	6'-8"	70	6'-8"	70
A2	40	#4	2	5'-7"	149	5'-7"	149
B4	12	#5	STR	45'-11"	575	45'-11"	575
K1	15	#4	6	6'-2"	62	6'-2"	62
K2	10	#4	STR	2'-7"	17	2'-7"	17
S1	73	#4	3	7'-6"	366	7'-6"	366
S2	73	#4	3	5'-8"	276	5'-8"	276
S3	127	#4	3	4'-10"	410	4'-10"	410
S4	54	#4	4	5'-10"	210	5'-10"	210
✱ S5	125	#5	5	6'-4"	826	--	--
REINFORCING STEEL				2135	LBS.	2135	LBS.
✱ EPOXY COATED REINF. STEEL				826	LBS.		
8000 P.S.I. CONCRETE				16.0	CU. YDS.	15.9	CU. YDS.
0.6" Ø L.R. STRANDS				No. 30		No. 30	

GRADE 270 STRANDS

	0.6" Ø L.R.
AREA (SQUARE INCHES)	0.217
ULTIMATE STRENGTH (LBS. PER STRAND)	58,600
APPLIED PRESTRESS (LBS. PER STRAND)	43,950

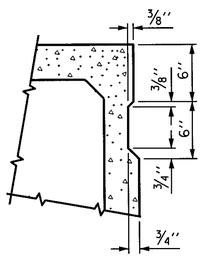

SHEAR KEY DETAIL

NOTE: OMIT SHEAR KEY ON OUTSIDE FACE OF EXTERIOR BOX BEAMS.

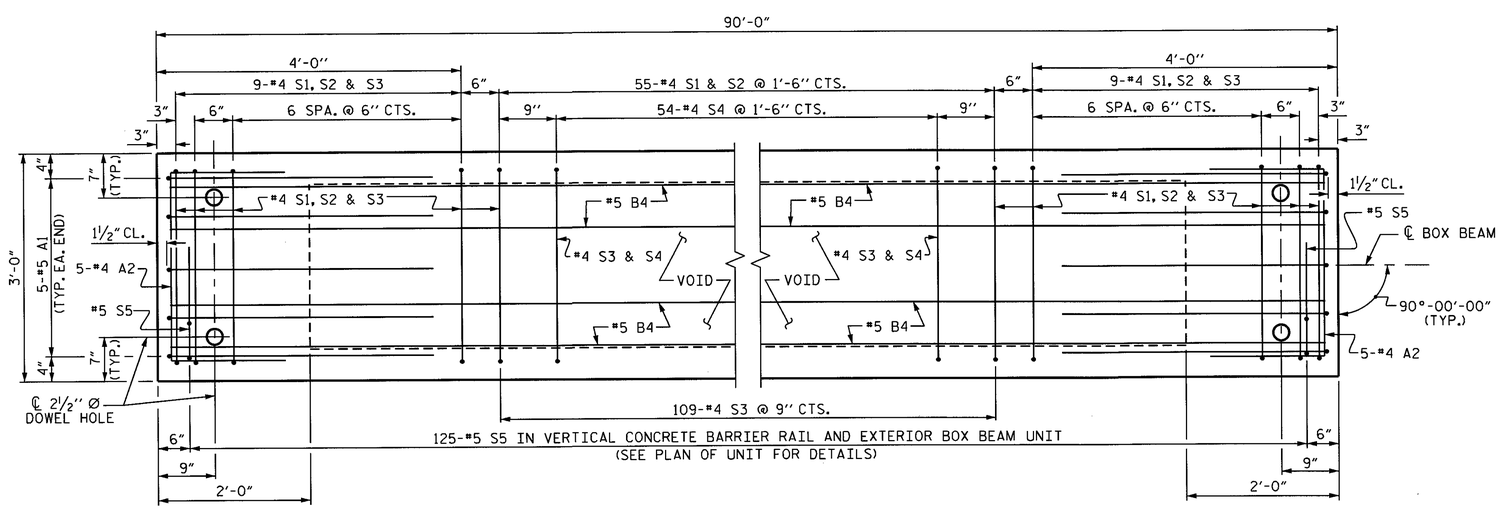

PLAN OF BOX BEAM

EXTERIOR UNIT SHOWN, INTERIOR UNIT SIMILAR EXCEPT OMIT #5 S5 BARS.
FOR LOCATION OF DIAPHRAGMS, SEE PLAN OF UNIT.
FOR REINFORCING STEEL IN DIAPHRAGMS, SEE DIAPHRAGM DETAILS.

PROJECT NO. BD-5111W
YADKIN COUNTY
STATION: 12+25.50 -L-

SHEET 3 OF 5

STATE OF NORTH CAROLINA
DEPARTMENT OF TRANSPORTATION
RALEIGH

STANDARD

3'-0" X 2'-9"
PRESTRESSED CONCRETE
BOX BEAM UNIT

NORTH CAROLINA PROFESSIONAL SEAL 15825 ENGINEER BRUCE D. KLAPPENBACH 2-27-2014

REVISIONS						SHEET NO.
NO.	BY:	DATE:	NO.	BY:	DATE:	S-6
1			3			TOTAL SHEETS
2			4			15

ASSEMBLED BY : R.Z. DEAN DATE : 12/2013
CHECKED BY : H.T. BARBOUR DATE : 1-13-14
DRAWN BY : DGE 10/11
CHECKED BY : TMG 11/11

24-FEB-2014 12:05
R:\Structures\Plans\rdean\BD5111W_SD_BX.dgn
bklappenbach

STD. NO. 33PCBB4_90S_90L

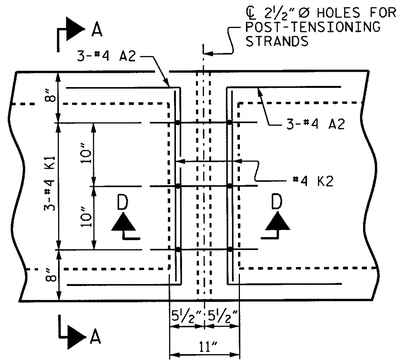

PLAN

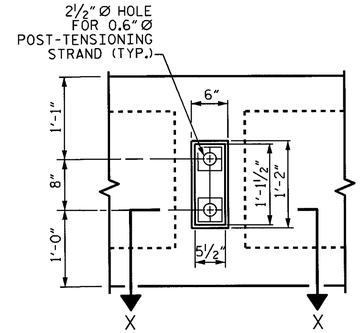

VIEW Y-Y

SHOWING ELEVATION VIEW OF GROUTED RECESS

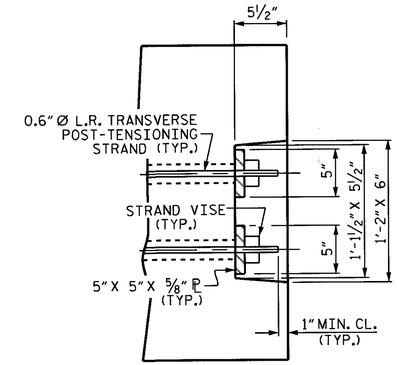

DETAIL "C"

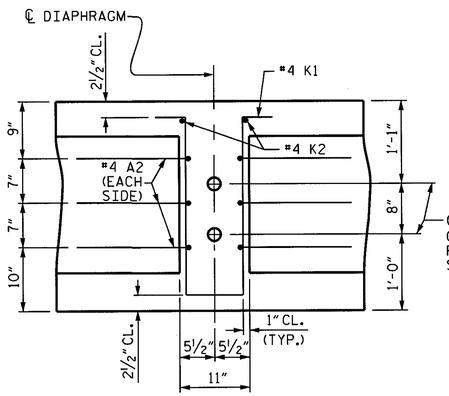

SECTION D-D

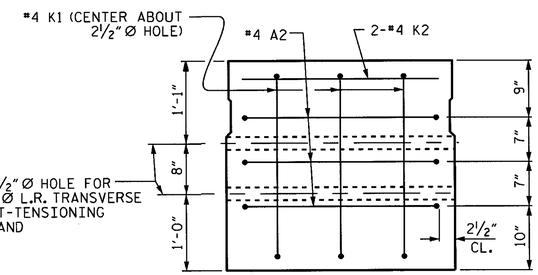

SECTION A-A

VOIDS NOT SHOWN

DOUBLE DIAPHRAGM DETAILS

#4 "S" BARS NOT SHOWN. #4 "S" BARS MAY BE SHIFTED SLIGHTLY TO CLEAR 2½" Ø HOLE.

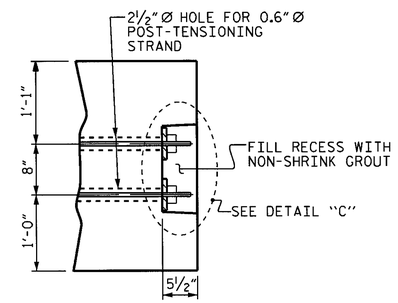

PART SECTION AT RECESS

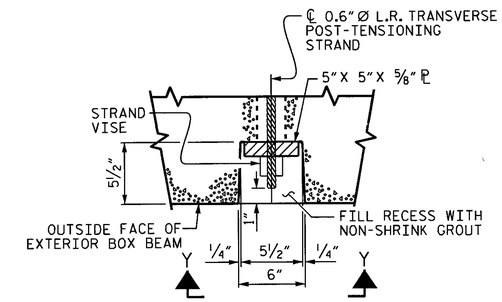

SECTION X-X

SHOWING PLAN VIEW OF GROUTED RECESS

GROUTED RECESS DETAIL AT END OF POST-TENSIONED STRANDS OF EXTERIOR BOX BEAM

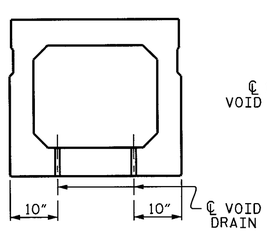

SECTION B-B

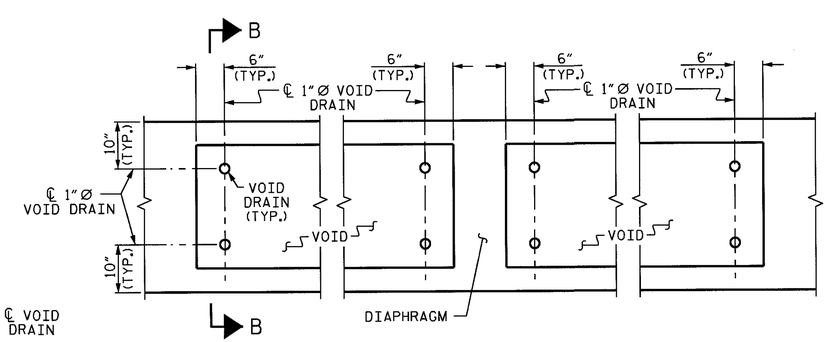

PART PLAN

VOID DRAIN DETAILS

(DIMENSIONS SHOWN ARE TYPICAL FOR EACH VOID)

DEAD LOAD DEFLECTION AND CAMBER	
	3'-0" x 2'-9"
90' BOX BEAM UNIT (NC & SE)	0.6"Ø L.R. STRAND
CAMBER (SLAB ALONE IN PLACE)	3¾" ↑
DEFLECTION DUE TO SUPERIMPOSED DEAD LOAD**	¾" ↓
FINAL CAMBER	3" ↑

** INCLUDES FUTURE WEARING SURFACE

PROJECT NO. BD-5111W

YADKIN COUNTY

STATION: 12+25.50 -L-

SHEET 4 OF 5

STATE OF NORTH CAROLINA
DEPARTMENT OF TRANSPORTATION
RALEIGH

STANDARD
3'-0" X 2'-9"
PRESTRESSED CONCRETE
BOX BEAM UNIT

NORTH CAROLINA PROFESSIONAL SEAL 5825 ENGINEER BRUCE D. KLAPPENBACH
2-27-2014

REVISIONS							
NO.	BY:	DATE:	NO.	BY:	DATE:	SHEET NO.	S-7
1			3			TOTAL SHEETS	15
2			4				

ASSEMBLED BY : R.Z. DEAN	DATE : 12/2013
CHECKED BY : H.T. BARBOUR	DATE : 1-13-14
DRAWN BY : DGE 10/11	
CHECKED BY : TMG 11/11	

24-FEB-2014 12:05
R:\Structures\Plans\rdean\BD5111W_SD_BX.dgn
bklappenbach

STD.NO.33PCBB5_90S

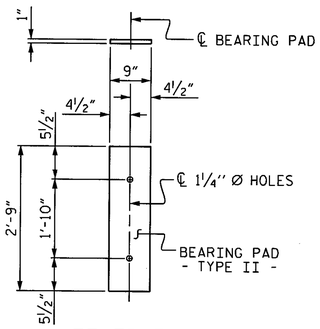

FIXED END
(TYPE II - 20 REQ'D)

ELASTOMERIC BEARING DETAILS

ELASTOMER IN ALL BEARINGS SHALL BE 60 DUROMETER HARDNESS.

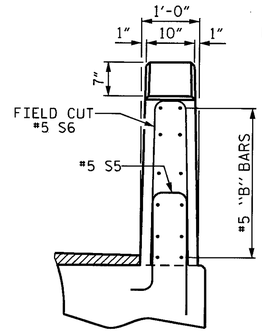

END VIEW

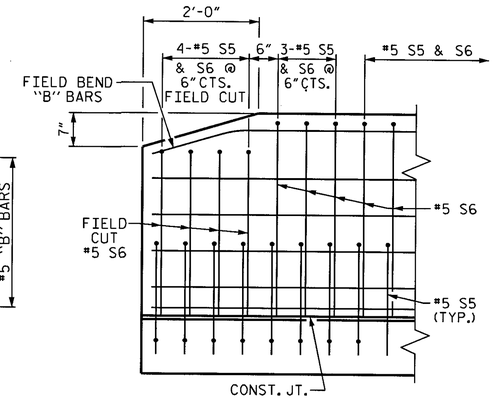

SIDE VIEW

END OF RAIL DETAILS

BAR TYPE

BAR DIMENSIONS ARE OUT TO OUT

BOX BEAM UNITS REQUIRED			
	NUMBER	LENGTH	TOTAL LENGTH
EXTERIOR B.B.	2	90'-0"	180'-0"
INTERIOR B.B.	8	90'-0"	720'-0"
TOTAL	10	———	900'-0"

BILL OF MATERIAL FOR VERTICAL CONCRETE BARRIER RAIL					
BAR	BARS PER PAIR OF EXTERIOR UNITS	SIZE	TYPE	LENGTH	WEIGHT
	90' UNIT				
*B10	96	#5	STR	22'-1"	2211
* S6	250	#5	1	7'-2"	1869
* EPOXY COATED REINFORCING STEEL			LBS.		4080
CLASS AA CONCRETE			CU.YDS.		24.2
TOTAL VERTICAL CONCRETE BARRIER RAIL			LN. FT.		180.0

GUTTERLINE ASPHALT THICKNESS & RAIL HEIGHT		
	ASPHALT OVERLAY THICKNESS @ MID-SPAN	RAIL HEIGHT @ MID-SPAN
90' UNITS	1½"	3'-8"

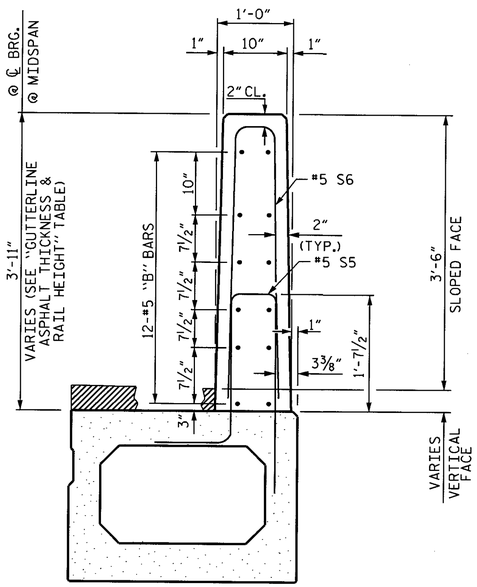

SECTION THRU RAIL

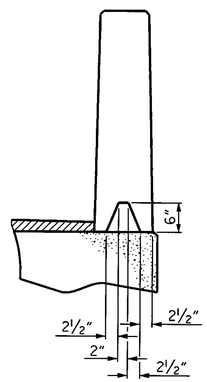

SECTION S-S
AT DAM IN OPEN JOINT
(THIS IS TO BE USED ONLY WHEN SLIP FORM IS USED)

℄ ½" EXP. JT. MAT'L HELD IN PLACE WITH GALVANIZED NAILS.
(NOTE: OMIT EXP. JT. MAT'L. WHEN SLIP FORM IS USED)

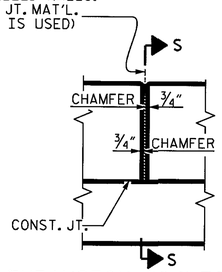

ELEVATION AT EXPANSION JOINTS

VERTICAL CONCRETE BARRIER RAIL DETAILS

PROJECT NO. BD-5111W
YADKIN COUNTY
STATION: 12+25.50 -L-

SHEET 5 OF 5

STATE OF NORTH CAROLINA
DEPARTMENT OF TRANSPORTATION
RALEIGH

3'-0" X 2'-9"
PRESTRESSED CONCRETE
BOX BEAM UNIT

NORTH CAROLINA PROFESSIONAL SEAL 15829 ENGINEER BRUCE D. KLAPPENBACH
2-27-2014

REVISIONS							SHEET NO.
NO.	BY:	DATE:	NO.	BY:	DATE:		S-8
1			3				TOTAL SHEETS
2			4				15

ASSEMBLED BY : R.Z. DEAN DATE : 12/2013
CHECKED BY : H.T. BARBOUR DATE : 1-13-14
DRAWN BY : DGE 10/11
CHECKED BY : TMG 11/11

24-FEB-2014 12:05
R:\Structures\Plans\rdean\BD5111W_SD_BX.dgn
bklappenbach

STD. NO. 33PCBB8_90S

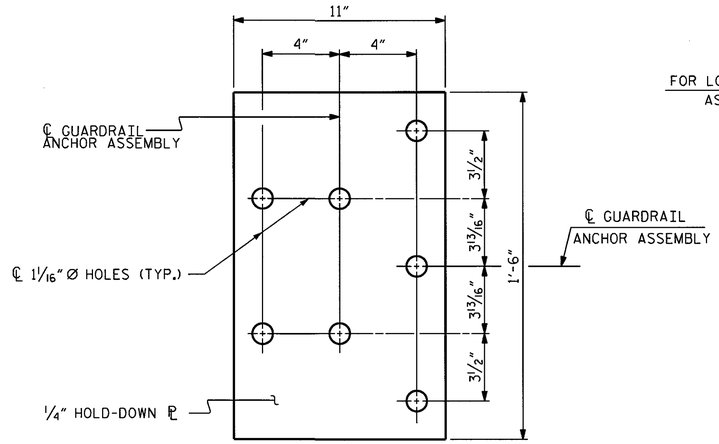

PLAN

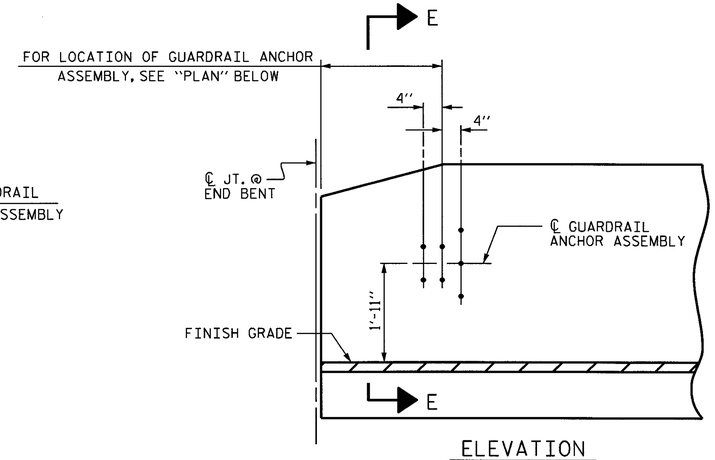

ELEVATION

NOTES

THE GUARDRAIL ANCHOR ASSEMBLY SHALL CONSIST OF A 1/4" HOLD DOWN PLATE AND 7 - 7/8" Ø BOLTS WITH NUTS AND WASHERS.

THE HOLD-DOWN PLATE SHALL CONFORM TO AASHTO M270 GRADE 36. AFTER FABRICATION, THE HOLD-DOWN PLATE SHALL BE HOT-DIP GALVANIZED IN ACCORDANCE WITH AASHTO M111.

BOLTS SHALL CONFORM TO THE REQUIREMENTS OF ASTM A307 AND NUTS SHALL CONFORM TO THE REQUIREMENTS OF AASHTO M291. BOLTS, NUTS AND WASHERS SHALL BE GALVANIZED. (AT THE CONTRACTOR'S OPTION, STAINLESS STEEL BOLTS, NUTS AND WASHERS MAY BE USED AS AN ALTERNATE FOR THE 7/8" Ø GALVANIZED BOLTS, NUTS AND WASHERS. THEY SHALL CONFORM TO OR EXCEED THE MECHANICAL REQUIREMENTS OF ASTM A307. THE USE OF THIS ALTERNATE SHALL BE APPROVED BY THE ENGINEER.)

THE GUARDRAIL ANCHOR ASSEMBLY IS REQUIRED AT ALL POINTS WHERE APPROACH GUARDRAIL IS TO BE ATTACHED TO THE END OF BARRIER RAIL. FOR POINTS OF ATTACHMENT, SEE SKETCH.

AFTER INSTALLATION, THE EXPOSED THREAD OF THE BOLT SHALL BE BURRED WITH A SHARP POINTED TOOL.

THE COST OF THE GUARDRAIL ANCHOR ASSEMBLY SHALL BE INCLUDED IN THE UNIT CONTRACT PRICE BID FOR VERTICAL CONCRETE BARRIER RAIL.

THE VERTICAL REINFORCING BARS MAY BE SHIFTED SLIGHTLY IN THE VERTICAL CONCRETE BARRIER RAIL TO CLEAR ASSEMBLY BOLTS.

THE 1 1/4" Ø HOLES SHALL BE FORMED OR DRILLED WITH A CORE BIT. IMPACT TOOLS WILL NOT BE PERMITTED. ANY CONCRETE DAMAGED BY THIS WORK SHALL BE REPAIRED TO THE SATISFACTION OF THE ENGINEER.

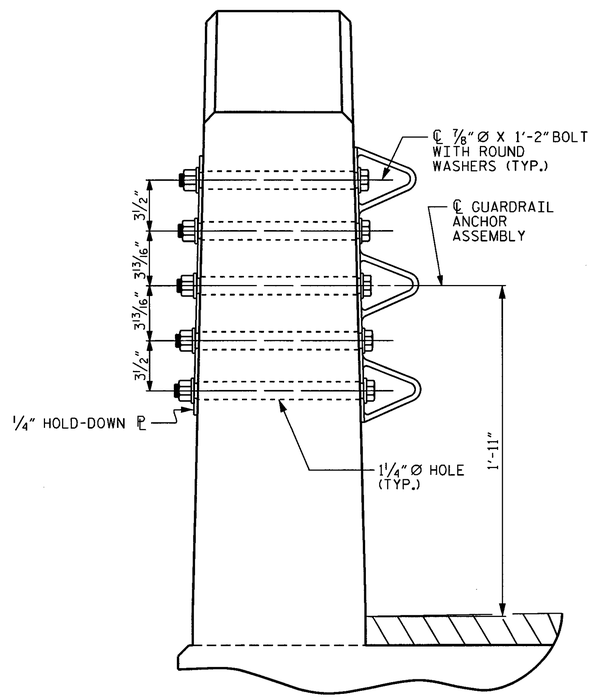

SECTION E-E

GUARDRAIL ANCHOR ASSEMBLY DETAILS

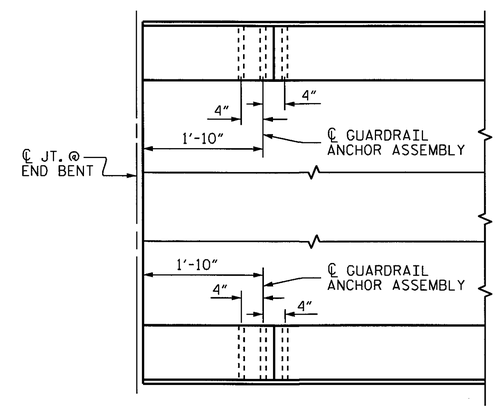

PLAN

LOCATION OF ANCHORS FOR GUARDRAIL

END BENT #1 SHOWN, END BENT #2 SIMILAR.

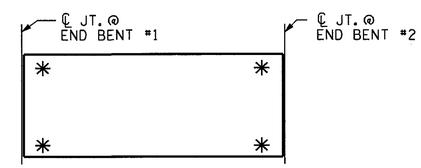

SKETCH SHOWING POINTS OF ATTACHMENT

✳ DENOTES GUARDRAIL ANCHOR ASSEMBLY

PROJECT NO. BD-5111W
YADKIN COUNTY
STATION: 12+25.50 -L-

STATE OF NORTH CAROLINA
DEPARTMENT OF TRANSPORTATION
RALEIGH

STANDARD
GUARDRAIL ANCHORAGE FOR VERTICAL CONCRETE BARRIER RAIL

NORTH CAROLINA PROFESSIONAL SEAL 19825 ENGINEER BRYCE D. KLAPPENBACH 2-27-2014

REVISIONS								SHEET NO.
NO.	BY:	DATE:		NO.	BY:	DATE:		S-9
1				3				TOTAL SHEETS
2				4				15

ASSEMBLED BY : R.Z. DEAN		DATE : 12/2013	
CHECKED BY : H.T. BARBOUR		DATE : 1-13-14	
DRAWN BY : MAA 5/10	REV. 10/1/11	MAA/GM	
CHECKED BY : GM 5/10	REV. 12/5/11	MAA/GM	
	REV. 6/13	MAA/GM	

24-FEB-2014 12:05
R:\Structures\Plans\rdean\BD5111W_SD_BX.dgn
bklappenbach

(SHT 1) STD. NO. GRA3

NOTES

STIRRUPS IN CAP MAY BE SHIFTED AS NECESSARY TO CLEAR DOWELS.

THE CONCRETE IN THE SHADED AREA OF THE WING SHALL BE POURED AFTER THE VERTICAL CONCRETE BARRIER RAIL IS CAST IF SLIP FORMING IS USED.

FOR PILE SPLICE DETAILS, SEE SHEET 4 OF 4.

FOR WING DETAILS, SEE SHEET 3 OF 4.

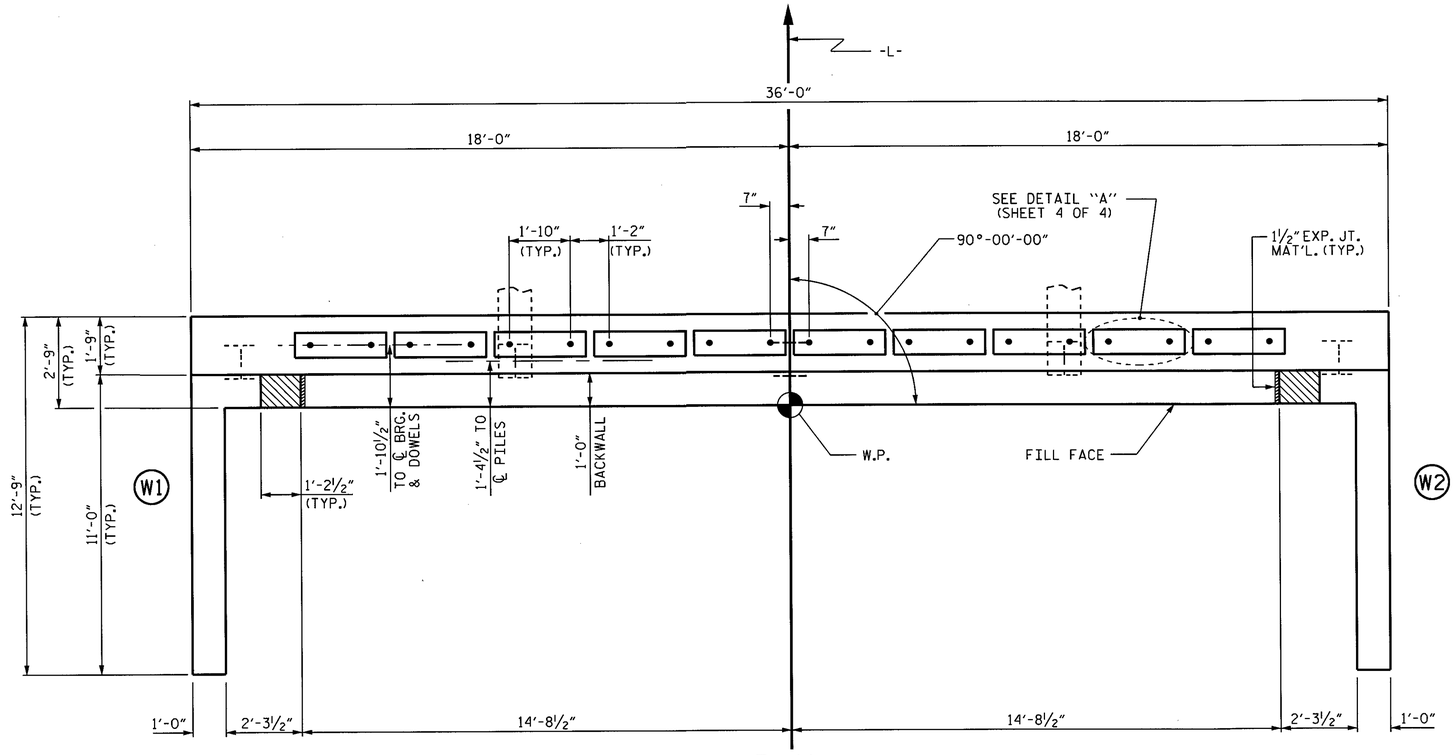

PLAN

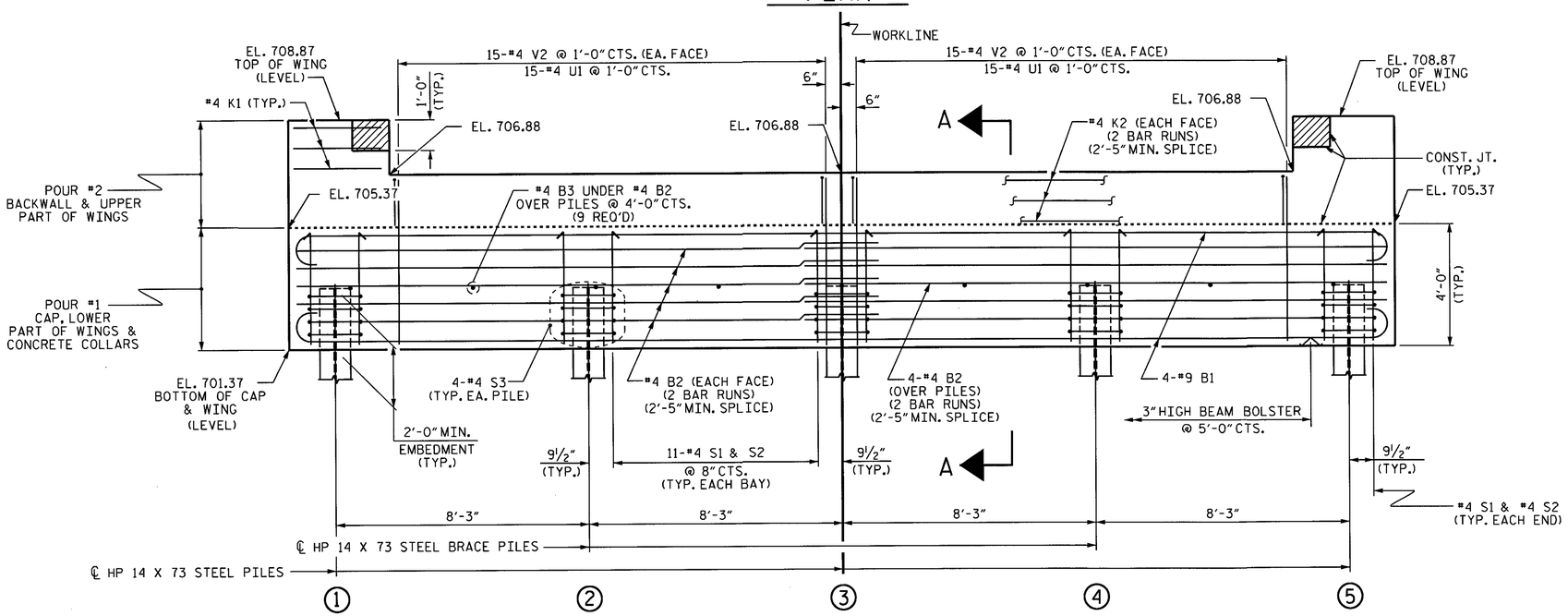

ELEVATION

WINGS NOT SHOWN FOR CLARITY.
FOR SECTION A-A, SEE SHEET 4 OF 4.
CONCRETE COLLARS FOR STEEL PILES NOT SHOWN IN PLAN AND ELEVATION VIEWS FOR CLARITY.
SEE "CORROSION PROTECTION FOR STEEL PILES DETAIL", SHEET 4 OF 4.

PROJECT NO. BD-5111W
YADKIN COUNTY
STATION: 12+25.50 -L-

SHEET 1 OF 4

STATE OF NORTH CAROLINA
DEPARTMENT OF TRANSPORTATION
RALEIGH

SUBSTRUCTURE

END BENT No. 1

REVISIONS								SHEET NO.
NO.	BY:	DATE:	NO.	BY:	DATE:			S-10
1			3					TOTAL SHEETS
2			4					15

NORTH CAROLINA PROFESSIONAL SEAL 15826 ENGINEER BRUCE D. KLAPPENBACH 2-27-2014

ASSEMBLED BY :	R. Z. DEAN	DATE :	12/2013
CHECKED BY :	H.T. BARBOUR	DATE :	1-13-14
DRAWN BY :	WJH	12/11	
CHECKED BY :	AAC	12/11	

24-FEB-2014 12:05
R:\Structures\Plans\rdean\BD5111W_SD_E*.dgn
bklappenbach

STD. NO. EB_30_90S4_33BB

NOTES

STIRRUPS IN CAP MAY BE SHIFTED AS NECESSARY TO CLEAR DOWELS.

THE CONCRETE IN THE SHADED AREA OF THE WING SHALL BE POURED AFTER THE VERTICAL CONCRETE BARRIER RAIL IS CAST IF SLIP FORMING IS USED.

FOR PILE SPLICE DETAILS, SEE SHEET 4 OF 4.

FOR WING DETAILS, SEE SHEET 3 OF 4.

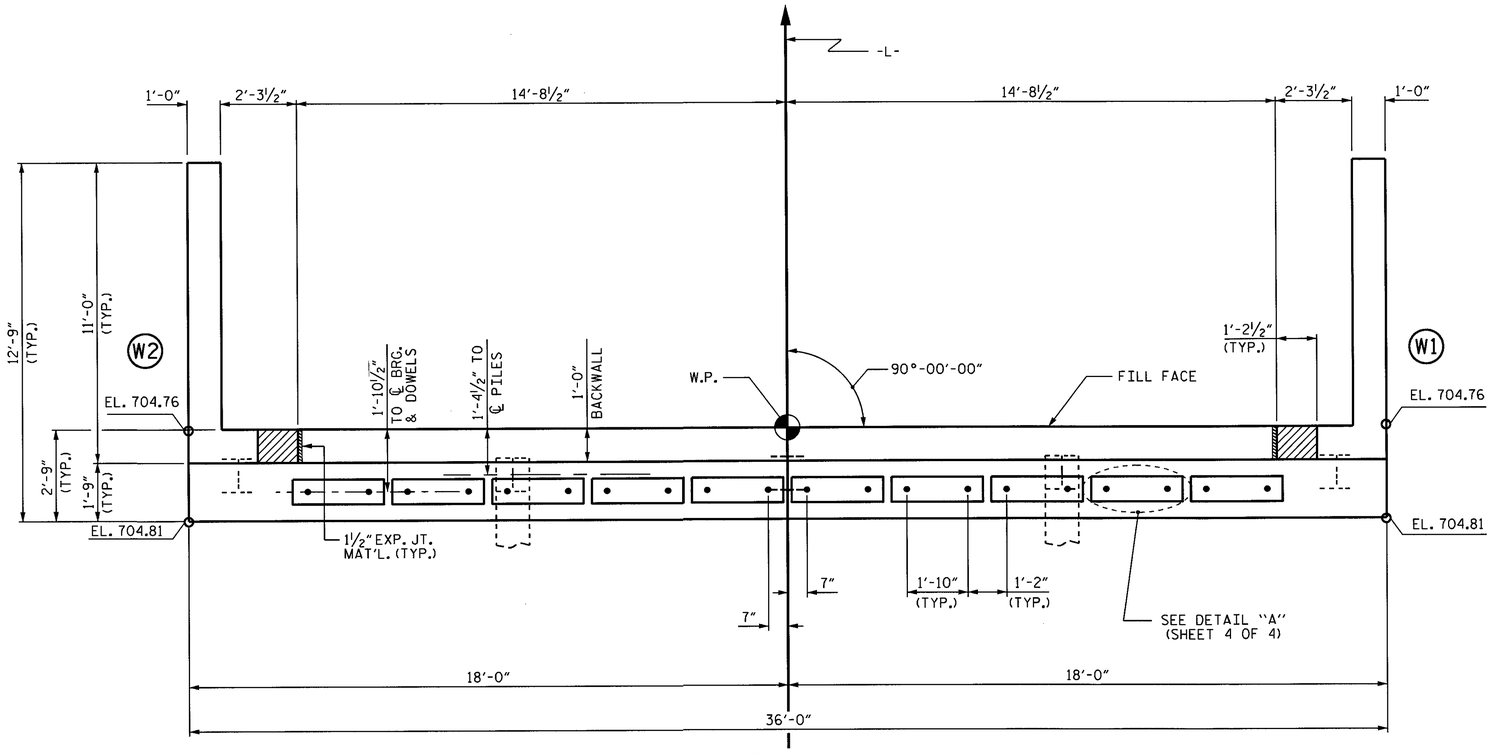

PLAN

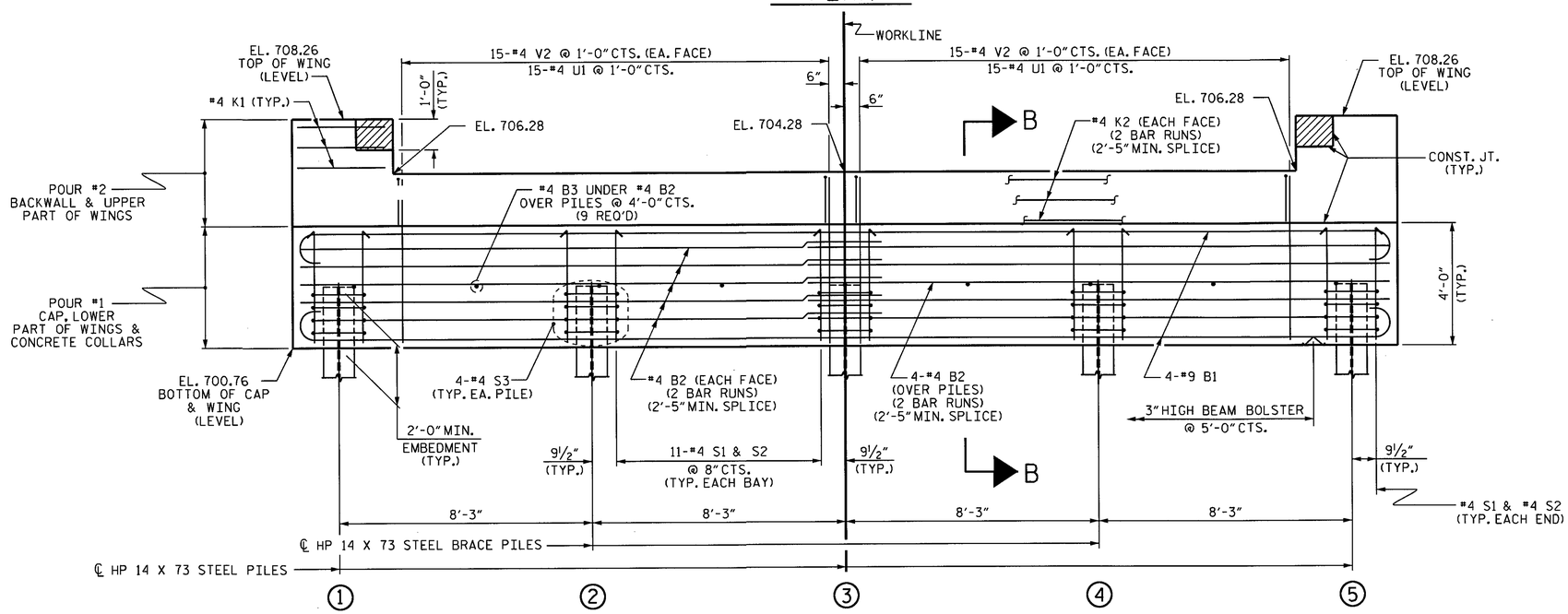

ELEVATION

WINGS NOT SHOWN FOR CLARITY.
FOR SECTION A-A, SEE SHEET 4 OF 4.
CONCRETE COLLARS FOR STEEL PILES NOT SHOWN IN PLAN AND ELEVATION VIEWS FOR CLARITY.
SEE "CORROSION PROTECTION FOR STEEL PILES DETAIL", SHEET 4 OF 4.

PROJECT NO. BD-5111W
YADKIN COUNTY
STATION: 12+25.50 -L-

SHEET 2 OF 4

STATE OF NORTH CAROLINA
DEPARTMENT OF TRANSPORTATION
RALEIGH

SUBSTRUCTURE

END BENT No. 2

NORTH CAROLINA PROFESSIONAL SEAL 15825 ENGINEER BRIAN D. KLAPPENBACH
2-27-2014

REVISIONS								SHEET NO.
NO.	BY:	DATE:	NO.	BY:	DATE:			S-11
1			3					TOTAL SHEETS
2			4					15

ASSEMBLED BY :	R.Z. DEAN	DATE :	12/2013
CHECKED BY :	H.T.BARBOUR	DATE :	1-13-14
DRAWN BY :	WJH	12/11	
CHECKED BY :	AAC	12/11	

27-FEB-2014 16:02
R:\Structures\Plans\rdean\BD5111W_SD_E*.dgn
bklappenbach

STD. NO. EB_30_90S4_33BB

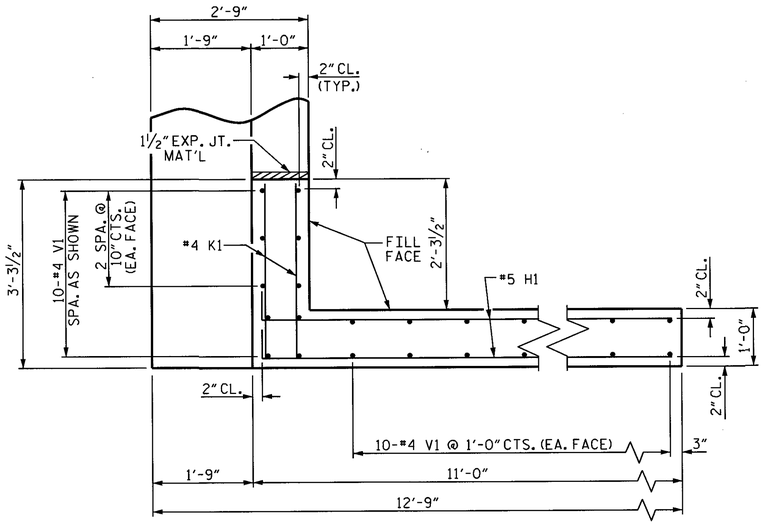

PLAN OF WING (W1)

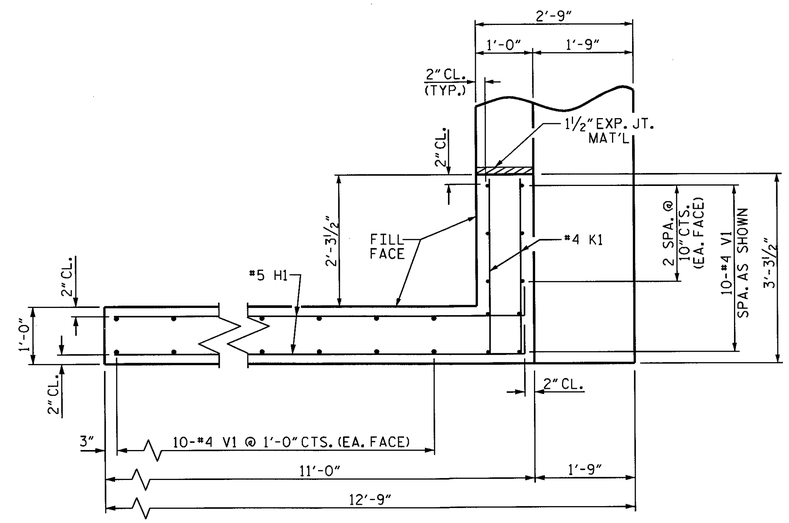

PLAN OF WING (W2)

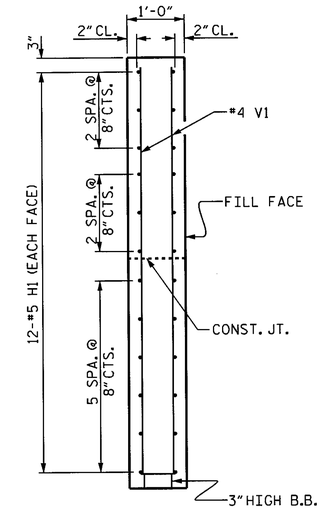

SECTION X-X

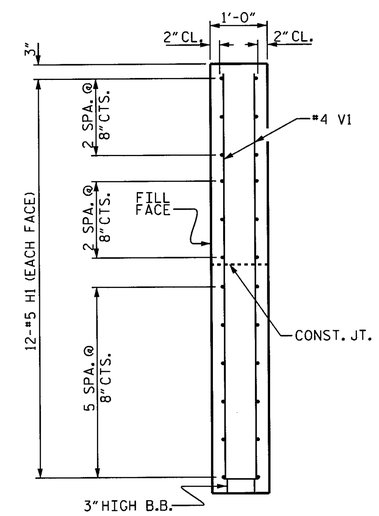

SECTION Y-Y

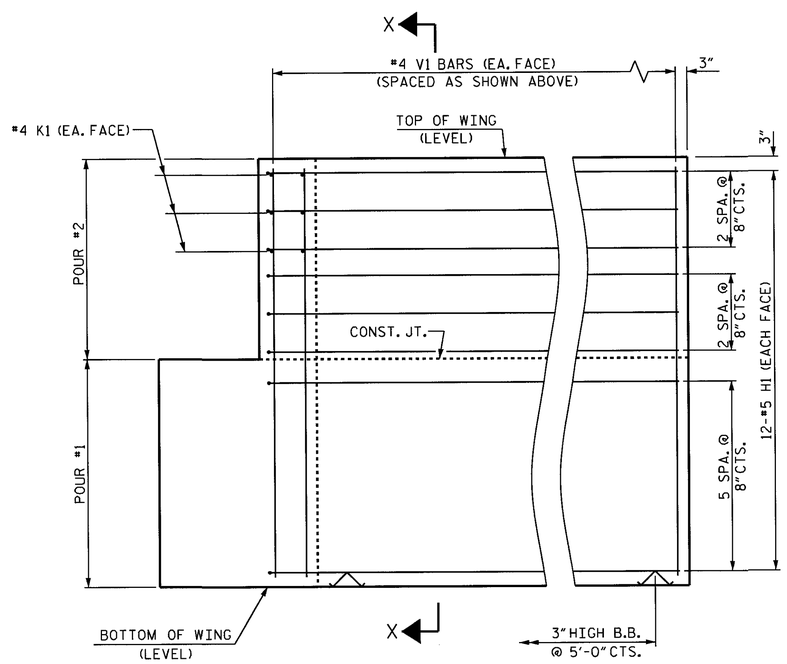

ELEVATION OF WING (W1)

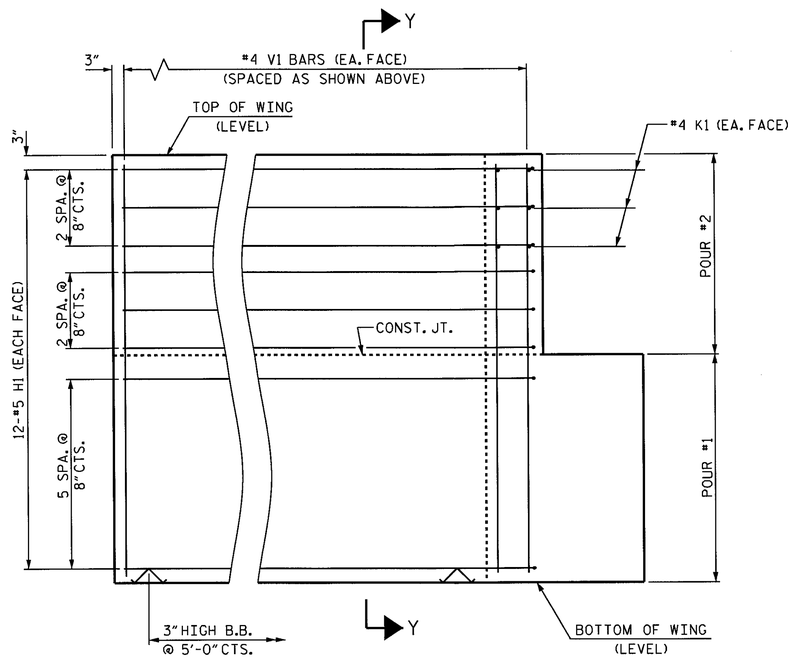

ELEVATION OF WING (W2)

WING DETAILS

PROJECT NO. BD-5111W

YADKIN COUNTY

STATION: 12+25.50 -L-

SHEET 3 OF 4

STATE OF NORTH CAROLINA
DEPARTMENT OF TRANSPORTATION
RALEIGH

SUBSTRUCTURE

END BENT
WING DETAILS

NORTH CAROLINA PROFESSIONAL SEAL 15825 ENGINEER BRUCE D. KLAPPENBACH 2-27-2014

REVISIONS						SHEET NO.
NO.	BY:	DATE:	NO.	BY:	DATE:	S-12
1			3			TOTAL SHEETS
2			4			15

ASSEMBLED BY : R.Z. DEAN DATE : 12/2013
CHECKED BY : H.T. BARBOUR DATE : 1-13-14
DRAWN BY : WJH 12/11
CHECKED BY : AAC 12/11

24-FEB-2014 12:05
R:\Structures\Plans\rdean\BD5111W_SD_E*.dgn
bklappenbach

STD. NO. EB_30_90S4_33BB

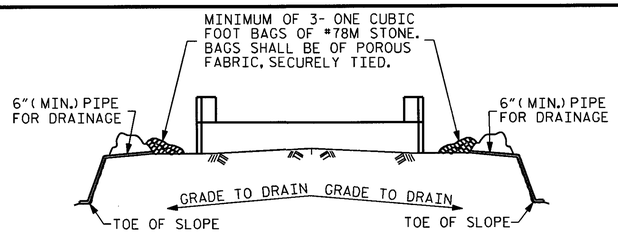

BAGGED STONE AND PIPE SHALL BE PLACED IMMEDIATELY AFTER COMPLETION OF END BENT EXCAVATION. PIPE MAY BE EITHER CONCRETE, CORRUGATED STEEL, CORRUGATED ALUMINUM ALLOY, OR CORRUGATED PLASTIC. PERFORATED PIPE WILL NOT BE ALLOWED.

BAGGED STONE SHALL REMAIN IN PLACE UNTIL THE ENGINEER DIRECTS THAT IT BE REMOVED. THE CONTRACTOR SHALL REMOVE AND DISPOSE OF SILT ACCUMULATIONS AT BAGGED STONE WHEN SO DIRECTED BY THE ENGINEER. BAGS SHALL BE REMOVED AND REPLACED WHENEVER THE ENGINEER DETERMINES THAT THEY HAVE DETERIORATED AND LOST THEIR EFFECTIVENESS.

NO SEPARATE PAYMENT WILL BE MADE FOR THIS WORK AND THE ENTIRE COST OF THIS WORK SHALL BE INCLUDED IN THE UNIT CONTRACT PRICE BID FOR THE SEVERAL PAY ITEMS.

TEMPORARY DRAINAGE AT END BENT

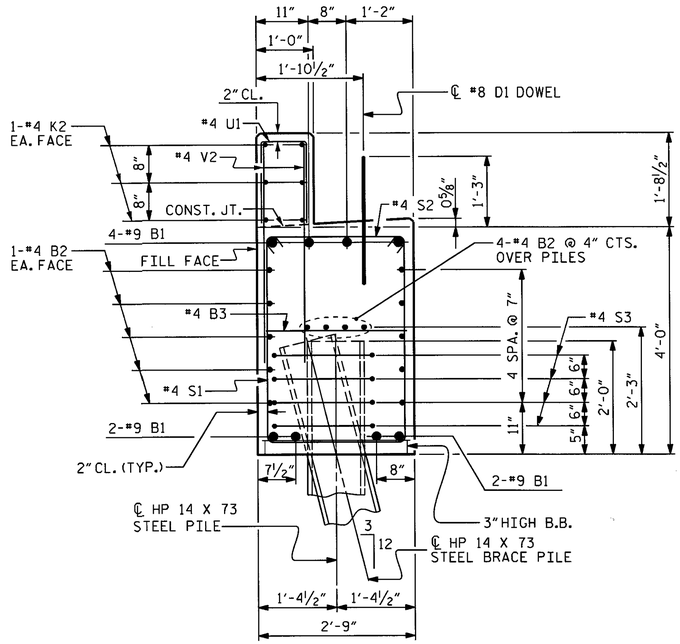

SECTION B-B

END BENT NO. 2
(CONCRETE COLLAR NOT SHOWN FOR CLARITY.
SEE "CORROSION PROTECTION FOR STEEL PILES DETAIL.")

BAR TYPES

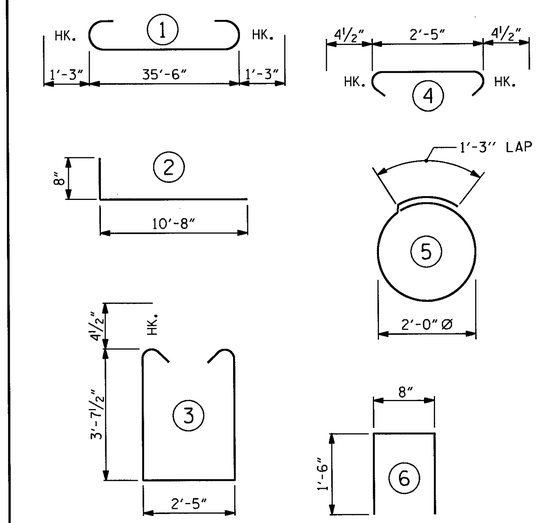

ALL BAR DIMENSIONS ARE OUT TO OUT.

END BENT No. 1		END BENT No. 2	
HP 14 X 73 STEEL PILES		HP 14 X 73 STEEL PILES	
NO: 5	LIN. FT.= 100	NO: 5	LIN. FT.= 140

BILL OF MATERIAL FOR ONE END BENT

BAR	NO.	SIZE	TYPE	LENGTH	WEIGHT
B1	8	#9	1	38'-0"	1034
B2	28	#4	STR	19'-1"	357
B3	9	#4	STR	2'-5"	15
D1	20	#8	STR	2'-3"	120
H1	48	#5	2	11'-4"	567
K1	12	#4	STR	2'-11"	23
K2	12	#4	STR	19'-1"	153
S1	46	#4	3	10'-5"	320
S2	46	#4	4	3'-2"	97
S3	20	#4	5	7'-7"	101
U1	30	#4	6	3'-8"	73
V1	60	#4	STR	7'-2"	287
V2	60	#4	STR	5'-4"	214

REINFORCING STEEL (FOR ONE END BENT) 3361 LBS.

CLASS A CONCRETE BREAKDOWN (FOR ONE END BENT)

POUR #1 CAP, LOWER PART OF WINGS & COLLARS 18.7 C.Y.

POUR #2 BACKWALL & UPPER PART OF WINGS 5.3 C.Y.

TOTAL CLASS A CONCRETE 24 C.Y.

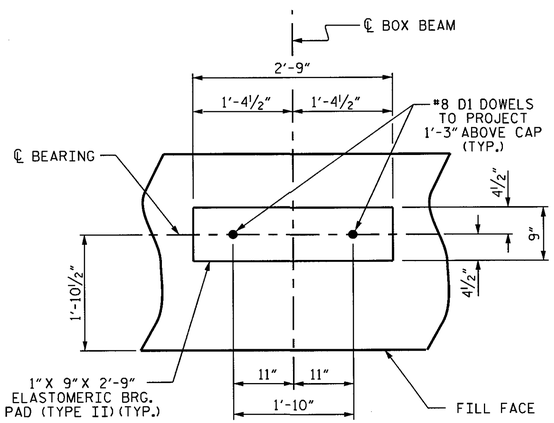

DETAIL "A"

(END BENT No. 1 SHOWN, END BENT No. 2 SIMILAR BY ROTATION)

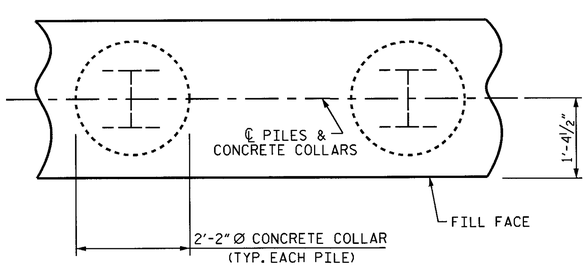

PLAN

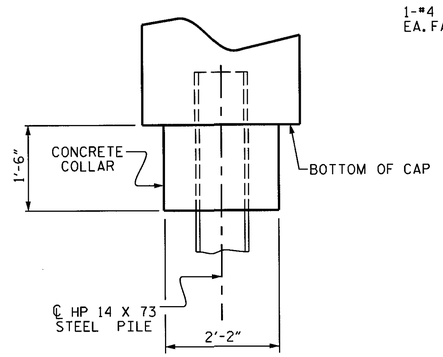

ELEVATION

CORROSION PROTECTION FOR STEEL PILES DETAIL

(END BENT No. 1 SHOWN, END BENT No. 2 SIMILAR BY ROTATION)

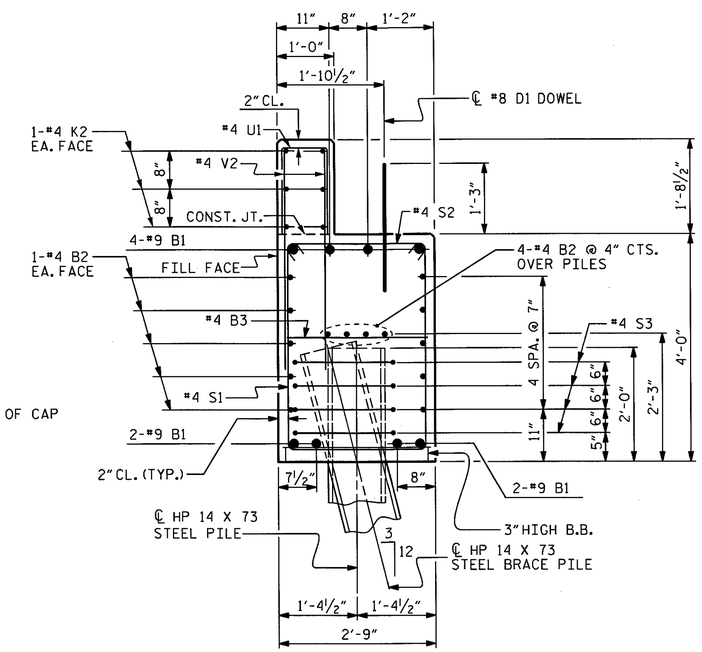

SECTION A-A

END BENT NO. 1
(CONCRETE COLLAR NOT SHOWN FOR CLARITY.
SEE "CORROSION PROTECTION FOR STEEL PILES DETAIL.")

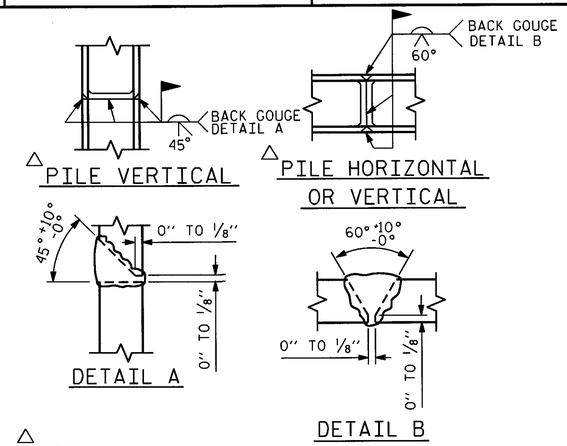

△ POSITION OF PILE DURING WELDING.

PILE SPLICE DETAILS

PROJECT NO. BD-5111W
YADKIN COUNTY
STATION: 12+25.50 -L-

SHEET 4 OF 4

STATE OF NORTH CAROLINA
DEPARTMENT OF TRANSPORTATION
RALEIGH

SUBSTRUCTURE

END BENT No. 1 & 2 DETAILS

NORTH CAROLINA PROFESSIONAL SEAL 19842 ENGINEER BRUCE D. KLAPPENBACH
2-27-2014

ASSEMBLED BY : R.Z. DEAN	DATE : 12/2013
CHECKED BY : H.T. BARBOUR	DATE : 1-13-14
DRAWN BY : WJH 12/11	
CHECKED BY : AAC 12/11	

REVISIONS								SHEET NO.
NO.	BY:	DATE:	NO.	BY:	DATE:			S-13
1			3					TOTAL SHEETS
2			4					15

27-FEB-2014 16:02
R:\Structures\rdean\BD5111W_SD_E*.dgn
bklappenbach

STD. NO. EB_30_90S4_33BB

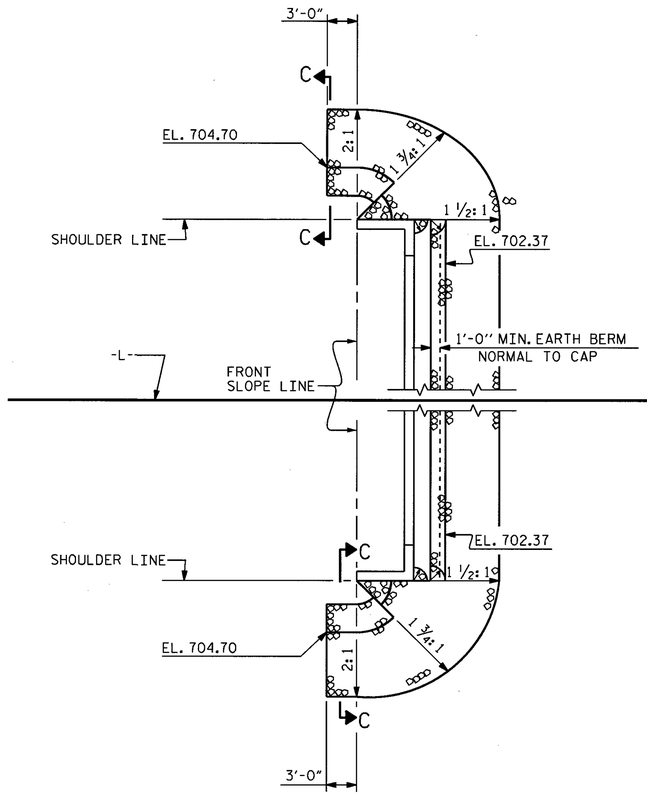

END BENT #1

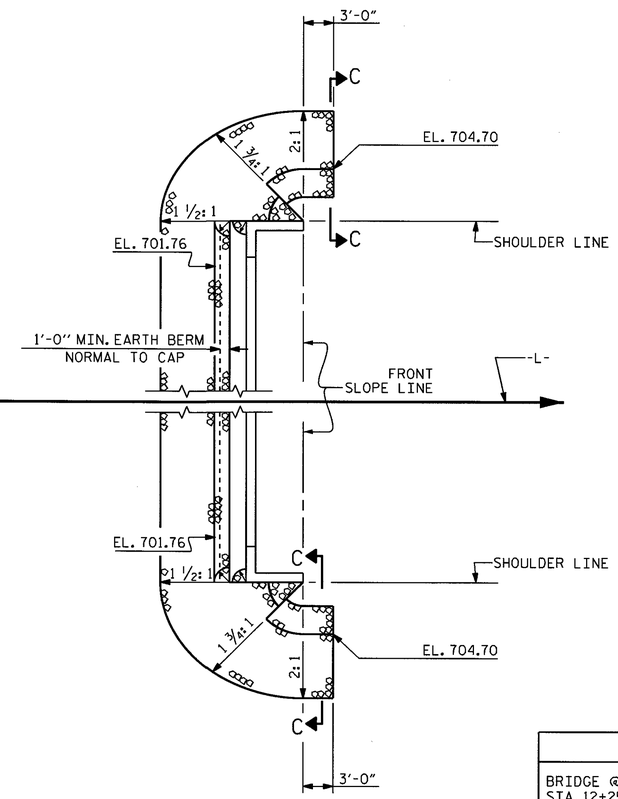

END BENT #2

PLAN

ESTIMATED QUANTITIES		
BRIDGE @ STA. 12+25.50-L-	RIP RAP CLASS II (2'-0" THICK)	GEOTEXTILE FOR DRAINAGE
	TONS	SQUARE YARDS
END BENT 1	75	80
END BENT 2	70	75
TOTAL	145	155

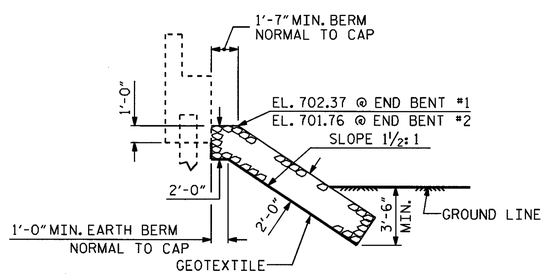

℄ SECTION
BERM RIP RAPPED

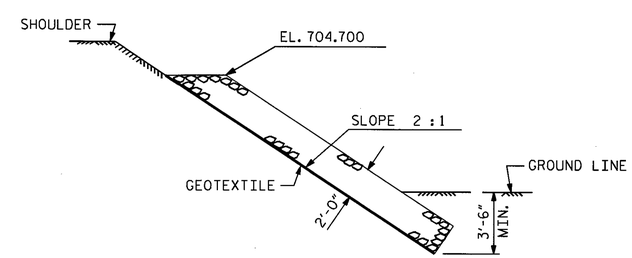

SECTION C-C

PROJECT NO. BD-5111W
YADKIN COUNTY
STATION: 12+25.50 -L-

STATE OF NORTH CAROLINA
DEPARTMENT OF TRANSPORTATION
RALEIGH

RIP RAP DETAILS

NORTH CAROLINA PROFESSIONAL SEAL 15825 ENGINEER BRUCE D. KLAPPENBACH
3-17-14

REVISIONS							SHEET NO.
NO.	BY:	DATE:	NO.	BY:	DATE:		S-14
1			3				TOTAL SHEETS
2			4				15

ASSEMBLED BY : H. T. BARBOUR		DATE :	1-14-14
CHECKED BY : B. D. KLAPPENBACH		DATE :	1-23-14
DRAWN BY : REK 1/84	REV. 5/1/06R		TLA/GM
CHECKED BY : RDU 1/84	REV. 10/1/11		MAA/GM
	REV. 12/21/11		MAA/GM

17-MAR-2014 09:58
R:\Structures\Plans\tbarbour\Microstation\BD5111W_SD_RR.dgn
bklappenbach

STD. NO. RR1 (Sht 2)

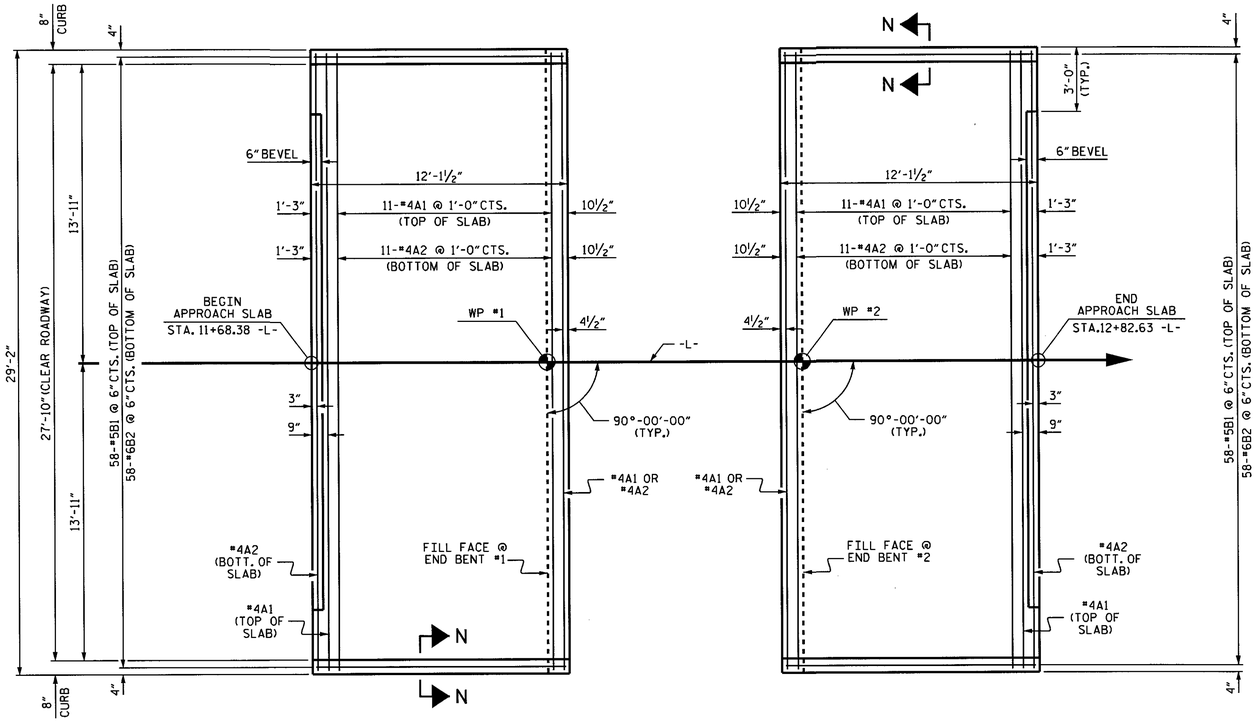

PLAN @ END BENT #1

PLAN @ END BENT #2

DIMENSIONS SHOWN ARE TYPICAL FOR BOTH APPROACH SLABS

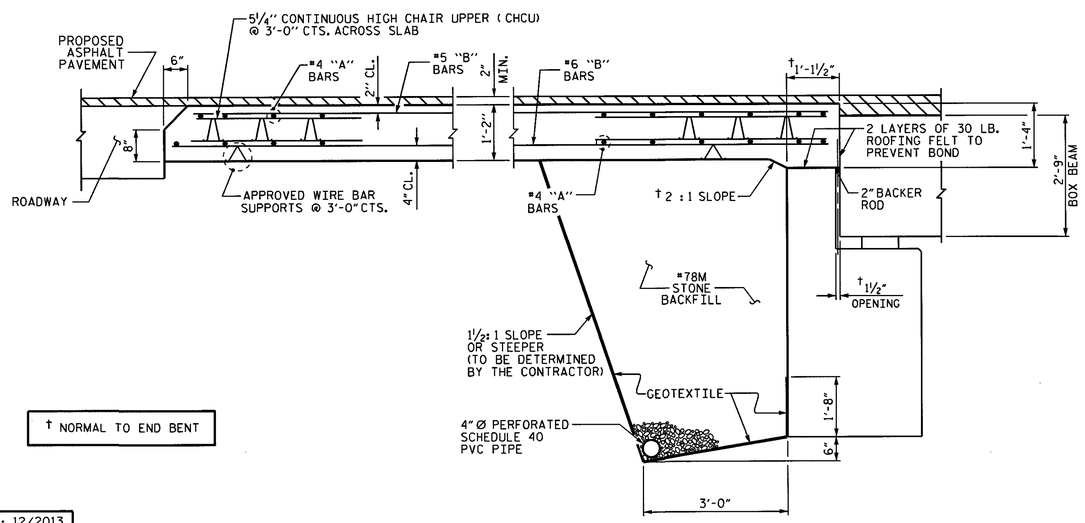

† NORMAL TO END BENT

SECTION THRU SLAB

NOTES

FOR BRIDGE APPROACH FILL INCLUDING GEOTEXTILE, 4" Ø DRAINAGE PIPE, AND #78M STONE BACKFILL, SEE ROADWAY PLANS.

GEOTEXTILE SHALL BE TYPE 1 IN ACCORDANCE WITH THE STANDARD SPECIFICATIONS SECTION 1056.

#78M STONE BACKFILL (CLASS V SELECT MATERIAL) SHALL BE IN ACCORDANCE WITH STANDARD SPECIFICATIONS SECTION 1016.

#78M STONE BACKFILL IS TO BE CONTINUOUS ALONG FILL FACE OF BACKWALL FROM OUTSIDE EDGE TO OUTSIDE EDGE OF APPROACH SLAB.

FOR THE 4" Ø DRAINAGE PIPE OUTLET(S), SEE ROADWAY STANDARD DRAWINGS.

AREA BETWEEN THE WINGWALL AND APPROACH SLAB SHALL BE GRADED TO DRAIN THE WATER AWAY FROM THE FILL FACE OF THE BRIDGE AND SHALL BE PAVED. SEE ROADWAY PLANS.

APPROACH SLAB GROOVING IS NOT REQUIRED.

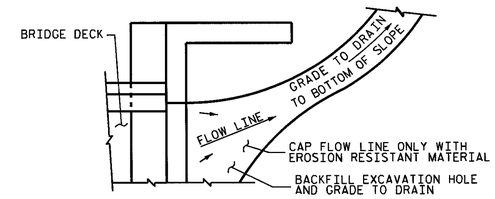

NOTE: IF THE APPROACH SLAB IS NOT CONSTRUCTED IMMEDIATELY AFTER THE BACKFILLING OF THE END BENT EXCAVATION, GRADE TO DRAIN TO THE BOTTOM OF THE SLOPE AND PROVIDE EROSION RESISTANT MATERIAL, SUCH AS FIBERGLASS ROVING OR AS DIRECTED BY THE ENGINEER TO PREVENT SOIL EROSION AND TO PROTECT THE AREA ADJACENT TO THE STRUCTURE. THE CONTRACTOR WILL BE REQUIRED TO REMOVE THESE MATERIALS PRIOR TO CONSTRUCTION OF THE APPROACH SLAB.

TEMPORARY DRAINAGE DETAIL

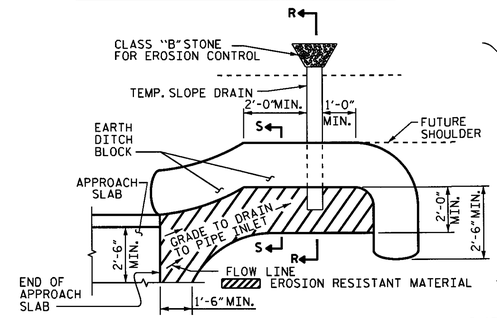

PLAN VIEW

NOTE: IMMEDIATELY AFTER THE CONSTRUCTION OF THE APPROACH SLAB, THE CONTRACTOR SHALL PROVIDE TEMPORARY BERM AND SLOPE DRAIN. CONTRACTOR SHALL GRADE TO PIPE INLET AND PROVIDE EROSION RESISTANT MATERIAL AS SHOWN. THE EROSION RESISTANT MATERIAL SHALL BE EITHER 1) ASPHALT PLANT MIX, TYPE 1 OR TYPE 2, MIN. 2" DEPTH, 2) EROSION CONTROL MAT, OR 3) CONCRETE, AS DIRECTED BY THE ENGINEER. THE SLOPE DRAIN SHALL CONSIST OF A NON-PERFORATED TEMPORARY DRAINAGE PIPE, 12 INCHES IN DIAMETER.

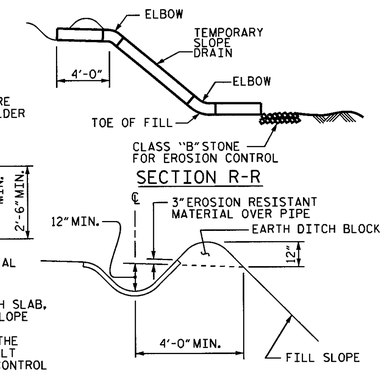

TEMPORARY BERM AND SLOPE DRAIN DETAILS

(TO BE USED WHEN SHOULDER BERM GUTTER IS REQUIRED)

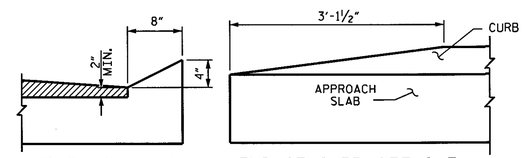

SECTION N-N

END OF CURB WITHOUT SHOULDER BERM GUTTER

CURB DETAILS

SPLICE LENGTHS		
BAR SIZE	EPOXY COATED	UNCOATED
#4	2'-0"	1'-9"
#5	2'-6"	2'-2"
#6	3'-10"	2'-7"

BILL OF MATERIAL

APPROACH SLAB AT EB #1

BAR	NO.	SIZE	TYPE	LENGTH	WEIGHT
* A1	13	#4	STR	28'-10"	250
A2	13	#4	STR	28'-10"	250
* B1	58	#5	STR	11'-2"	676
B2	58	#6	STR	11'-8"	1016
REINFORCING STEEL				LBS.	1266
* EPOXY COATED REINFORCING STEEL				LBS.	926
CLASS AA CONCRETE				C. Y.	15.6

APPROACH SLAB AT EB #2

BAR	NO.	SIZE	TYPE	LENGTH	WEIGHT
* A1	13	#4	STR	28'-10"	250
A2	13	#4	STR	28'-10"	250
* B1	58	#5	STR	11'-2"	676
B2	58	#6	STR	11'-8"	1016
REINFORCING STEEL				LBS.	1266
* EPOXY COATED REINFORCING STEEL				LBS.	926
CLASS AA CONCRETE				C. Y.	15.6

PROJECT NO. BD-5111W

YADKIN COUNTY

STATION: 12+25.50 -L-

STATE OF NORTH CAROLINA
DEPARTMENT OF TRANSPORTATION
RALEIGH

STANDARD
BRIDGE APPROACH SLAB
FOR PRESTRESSED CONCRETE
BOX BEAM UNIT
(SUB-REGIONAL TIER)
90° SKEW

NORTH CAROLINA PROFESSIONAL SEAL 19820 ENGINEER B. D. KLAPPENBACH
2-27-2014

REVISIONS							SHEET NO.
NO.	BY:	DATE:	NO.	BY:	DATE:		S-15
1			3				TOTAL SHEETS
2			4				15

ASSEMBLED BY : R.Z. DEAN	DATE : 12/2013	
CHECKED BY : H.T. BARBOUR	DATE : 1-13-14	
DRAWN BY : MAA 11/11		
CHECKED BY : AAC 11/11		

24-FEB-2014 12:05
R:\Structures\Plans\rdean\BD5111W_SD_AS.dgn
bklappenbach

STD. NO. BAS_BB_30_90S

STANDARD NOTES

DESIGN DATA:

SPECIFICATIONS	A.A.S.H.T.O. (CURRENT)
LIVE LOAD	SEE PLANS
IMPACT ALLOWANCE	SEE A.A.S.H.T.O.
STRESS IN EXTREME FIBER OF	
STRUCTURAL STEEL - AASHTO M270 GRADE 36	20,000 LBS. PER SQ. IN.
- AASHTO M270 GRADE 50W	27,000 LBS. PER SQ. IN.
- AASHTO M270 GRADE 50	27,000 LBS. PER SQ. IN.
REINFORCING STEEL IN TENSION	
GRADE 60	24,000 LBS. PER SQ. IN.
CONCRETE IN COMPRESSION	1,200 LBS. PER SQ. IN.
CONCRETE IN SHEAR	SEE A.A.S.H.T.O.
STRUCTURAL TIMBER - TREATED OR	
UNTREATED - EXTREME FIBER STRESS	1,800 LBS. PER SQ. IN.
COMPRESSION PERPENDICULAR TO GRAIN OF TIMBER	375 LBS. PER SQ. IN.
EQUIVALENT FLUID PRESSURE OF EARTH	30 LBS. PER CU. FT. (MINIMUM)

MATERIAL AND WORKMANSHIP:

EXCEPT AS MAY OTHERWISE BE SPECIFIED ON PLANS OR IN THE SPECIAL PROVISIONS, ALL MATERIAL AND WORKMANSHIP SHALL BE IN ACCORDANCE WITH THE 2012 "STANDARD SPECIFICATIONS FOR ROADS AND STRUCTURES" OF THE N. C. DEPARTMENT OF TRANSPORTATION.

STEEL SHEET PILING FOR PERMANENT OR TEMPORARY APPLICATIONS SHALL BE HOT ROLLED.

CONCRETE:

UNLESS OTHERWISE REQUIRED ON PLANS, CLASS A CONCRETE SHALL BE USED FOR ALL PORTIONS OF ALL STRUCTURES WITH THE EXCEPTION THAT: CLASS AA CONCRETE SHALL BE USED IN BRIDGE SUPERSTRUCTURES, ABUTMENT BACKWALLS, AND APPROACH SLABS; AND CLASS B CONCRETE SHALL BE USED FOR SLOPE PROTECTION AND RIP RAP.

CONCRETE CHAMFERS:

UNLESS OTHERWISE NOTED ON THE PLANS, ALL EXPOSED CORNERS ON STRUCTURES SHALL BE CHAMFERED 3/4" WITH THE FOLLOWING EXCEPTIONS: TOP CORNERS OF CURBS MAY BE ROUNDED TO 1-1/2" RADIUS WHICH IS BUILT INTO CURB FORMS; CORNERS OF TRANSVERSE FLOOR EXPANSION JOINTS SHALL BE ROUNDED WITH A 1/4" FINISHING TOOL UNLESS OTHERWISE REQUIRED ON PLANS; AND CORNERS OF EXPANSION JOINTS IN THE ROADWAY FACES AND TOPS OF CURBS AND SIDEWALKS SHALL BE ROUNDED TO A 1/4" RADIUS WITH A FINISHING STONE OR TOOL UNLESS OTHERWISE REQUIRED ON PLANS.

DOWELS:

DOWELS WHEN INDICATED ON PLANS AS FOR CULVERT EXTENSIONS, SHALL BE EMBEDDED AT LEAST 12" INTO THE OLD CONCRETE AND GROUTED INTO PLACE WITH 1:2 CEMENT MORTAR.

ALLOWANCE FOR DEAD LOAD DEFLECTION, SETTLEMENT, ETC. IN CASTING SUPERSTRUCTURES:

BRIDGES SHALL BE BUILT ON THE GRADE OR VERTICAL CURVE SHOWN ON PLANS. SLABS, CURBS AND PARAPETS SHALL CONFORM TO THE GRADE OR CURVE.

ALL DIMENSIONS WHICH ARE GIVEN IN SECTION AND ARE AFFECTED BY DEAD LOAD DEFLECTIONS ARE DIMENSIONS AT CENTER LINE OF BEARING UNLESS OTHERWISE NOTED ON PLANS. IN SETTING FORMS FOR STEEL BEAM BRIDGES AND PRESTRESSED CONCRETE GIRDER BRIDGES, ADJUSTMENTS SHALL BE MADE DUE TO THE DEAD LOAD DEFLECTIONS FOR THE ELEVATIONS SHOWN. WHERE BLOCKS ARE SHOWN OVER BEAMS FOR BUILDING UP TO THE SLAB, THE VERTICAL DIMENSIONS OF THE BLOCKS SHALL BE ADJUSTED BETWEEN BEARINGS TO COMPENSATE FOR DEAD LOAD DEFLECTIONS, VERTICAL CURVE ORDINATE, AND ACTUAL BEAM CAMBER. WHERE BOTTOM OF SLAB IS IN LINE WITH BOTTOM OF TOP FLANGES, DEPTH OF SLAB BETWEEN BEARINGS SHALL BE ADJUSTED TO COMPENSATE FOR DEAD LOAD DEFLECTION, VERTICAL CURVE ORDINATE, AND ACTUAL BEAM CAMBER.

IN SETTING FALSEWORK AND FORMS FOR REINFORCED CONCRETE SPANS, AN ALLOWANCE SHALL BE MADE FOR DEAD LOAD DEFLECTIONS, SETTLEMENT OF FALSEWORK, AND PERMANENT CAMBER WHICH SHALL BE PROVIDED FOR IN ADDITION TO THE ELEVATIONS SHOWN. AFTER REMOVAL OF THE FALSEWORK, THE FINISHED STRUCTURES SHALL CONFORM TO THE PROFILE AND ELEVATIONS SHOWN ON THE PLANS AND CONSTRUCTION ELEVATIONS FURNISHED BY THE ENGINEER.

DETAILED DRAWINGS FOR FALSEWORK OR FORMS FOR BRIDGE SUPERSTRUCTURE AND ANY STRUCTURE OR PARTS OF A STRUCTURE AS NOTED ON THE PLANS SHALL BE SUBMITTED TO THE ENGINEER FOR APPROVAL BEFORE CONSTRUCTION OF THE FALSEWORK OR FORMS IS STARTED.

REINFORCING STEEL:

ALL REINFORCING STEEL SHALL BE DEFORMED. DIMENSIONS RELATIVE TO PLACEMENT OF REINFORCING ARE TO CENTERS OF BARS UNLESS OTHERWISE INDICATED IN THE PLANS. DIMENSIONS ON BAR DETAILS ARE TO CENTERS OF BARS OR ARE OUT TO OUT AS INDICATED ON PLANS.

WIRE BAR SUPPORTS SHALL BE PROVIDED FOR REINFORCING STEEL WHERE INDICATED ON THE PLANS. WHEN BAR SUPPORT PIECES ARE PLACED IN CONTINUOUS LINES, THEY SHALL BE SO PLACED THAT THE ENDS OF THE SUPPORTING WIRES SHALL BE LAPPED TO LOCK LEGS ON ADJOINING PIECES.

STRUCTURAL STEEL:

AT THE CONTRACTOR'S OPTION, HE MAY SUBSTITUTE 7/8" Ø SHEAR STUDS FOR THE 3/4" Ø STUDS SPECIFIED ON THE PLANS. THIS SUBSTITUTION SHALL BE MADE AT THE RATE OF 3 - 7/8" Ø STUDS FOR 4 - 3/4" Ø STUDS, AND STUD SPACING CHANGES SHALL BE MADE AS NECESSARY TO PROVIDE THE SAME EQUIVALENT NUMBER OF 7/8" Ø STUDS ALONG THE BEAM AS SHOWN FOR 3/4" Ø STUDS BASED ON THE RATIO OF 3 - 7/8" Ø STUDS FOR 4 - 3/4" Ø STUDS. STUDS OF THE LENGTH SPECIFIED ON THE PLANS MUST BE PROVIDED. THE MAXIMUM SPACING SHALL BE 2'-0".

EXCEPT AT THE INTERIOR SUPPORTS OF CONTINUOUS BEAMS WHERE THE COVER PLATE IS IN CONTACT WITH BEARING PLATE, THE CONTRACTOR MAY, AT HIS OPTION, SUBSTITUTE FOR THE COVER PLATES DESIGNATED ON THE PLANS COVER PLATES OF THE EQUIVALENT AREA PROVIDED THESE PLATES ARE AT LEAST 5/16" IN THICKNESS AND DO NOT EXCEED A WIDTH EQUAL TO THE FLANGE WIDTH LESS 2" OR A THICKNESS EQUAL TO 2 TIMES THE FLANGE THICKNESS. THE SIZE OF FILLET WELDS SHALL CONFORM TO THE REQUIREMENTS OF THE CURRENT ANSI/AASHTO/AWS "BRIDGE WELDING CODE". ELECTROSLAG WELDING WILL NOT BE PERMITTED.

WITH THE SOLE EXCEPTION OF EDGES AT SURFACES WHICH BEAR ON OTHER SURFACES, ALL SHARP EDGES AND ENDS OF SHAPES AND PLATES SHALL BE SLIGHTLY ROUNDED BY SUITABLE MEANS TO A RADIUS OF APPROXIMATELY 1/16 INCH OR EQUIVALENT FLAT SURFACE AT A SUITABLE ANGLE PRIOR TO PAINTING, GALVANIZING, OR METALLIZING.

HANDRAILS AND POSTS:

METAL STANDARDS AND FACES OF THE CONCRETE END POSTS FOR THE METAL RAIL SHALL BE SET NORMAL TO THE GRADE OF THE CURB, UNLESS OTHERWISE SHOWN ON PLANS. THE METAL RAIL AND TOPS OF CONCRETE POSTS USED WITH THE ALUMINUM RAIL SHALL BE BUILT PARALLEL TO THE GRADE OF THE CURB.

METAL HANDRAILS SHALL BE IN ACCORDANCE WITH THE PLANS. RAILS SHALL BE AS MANUFACTURED FOR BRIDGE RAILING. CASTINGS SHALL BE OF A UNIFORM APPEARANCE. FINS AND OTHER DEFORMATIONS RESULTING FROM CASTING OR OTHERWISE SHALL BE REMOVED IN A MANNER SO THAT A UNIFORM COLORING OF THE COMPLETED CASTING SHALL BE OBTAINED. CASTINGS WITH DISCOLORATIONS OR OF NON-UNIFORM COLORING WILL NOT BE ACCEPTED. CERTIFIED MILL REPORTS ARE REQUIRED FOR METAL RAILS AND POSTS.

SPECIAL NOTES:

GENERALLY, IN CASE OF DISCREPANCY, THIS STANDARD SHEET OF NOTES SHALL GOVERN OVER THE SPECIFICATIONS, BUT THE REMAINDER OF THE PLANS SHALL GOVERN OVER NOTES HEREON, AND SPECIAL PROVISIONS SHALL GOVERN OVER ALL. SEE SPECIFICATIONS ARTICLE 105-4.

ENGLISH

JANUARY, 1990

8/17/99

TYPICAL SECTION

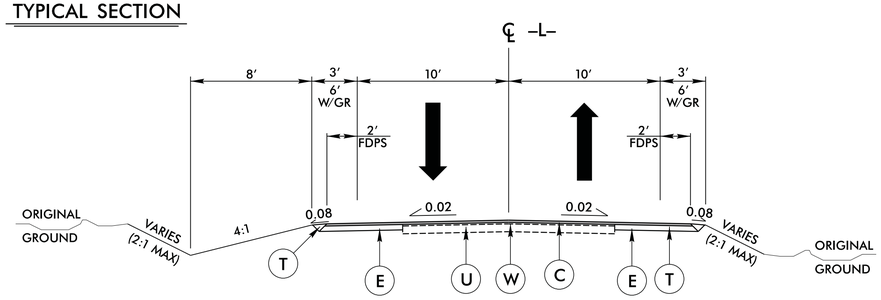

PAVEMENT SCHEDULE	
C	1½" SURFACE COURSE, TYPE SF9.5A
E	5½" BASE COURSE, TYPE B25.0B
T	EARTH MATERIAL
U	EXISTING PAVEMENT.
W	WEDGING

DETAIL A
RIP RAP AT EMBANKMENT
(Not to Scale)

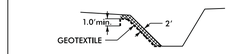

Type of Liner= 190 TONS,CL II Rip-Rap Total
Geotextile= 205 SY Total

FROM STA. 11+88 TO STA. 12+13
FROM STA. 12+42 TO STA. 12+61

DETAIL B
PREFORMED SCOUR HOLE
(Not to Scale)

PLAN VIEW

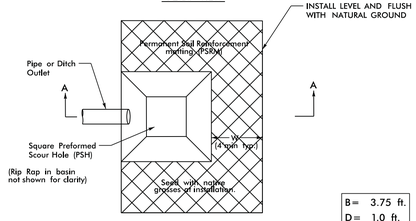

B=	3.75 ft.
D=	1.0 ft.
W=	4.0 ft.

SECTION A-A

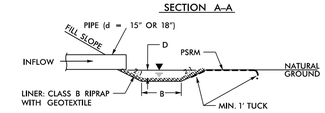

308

AT STA. 12+94.5 RT

PROJECT REFERENCE NO.	SHEET NO.
BD-5111W	RDY-1
R/W SHEET NO.	

ROADWAY DESIGN ENGINEER
NORTH CAROLINA PROFESSIONAL SEAL 23982 ENGINEER STEPHEN E. ROBERTS
Stephen E. Roberts 4-16-14

HYDRAULICS ENGINEER
NORTH CAROLINA PROFESSIONAL SEAL 030018 ENGINEER COREY CAVALIER
Corey Cavalier 4-16-14

GRAPHIC SCALES

50 0 50 100
PLANS

50 0 50 100
PROFILE (HORIZONTAL)

10 0 10 20
PROFILE (VERTICAL)

DESIGN SPEED = 55 mph
ADT = 1300 (2009)

NAD 83/NSRS 2007

RIGHT-OF-WAY AREAS									
PARCEL #	PROPERTY OWNER'S NAME	TOTAL AREA	AREA TAKEN	AREA REMAINING RIGHT	AREA REMAINING LEFT	CONSTRUCTION EASEMENT	PERMANENT DRAINAGE EASEMENT	TEMPORARY DRAINAGE EASEMENT	PERMANENT UTILITY EASEMENT
1	POINDEXTER, FRANK, DONALD JR &	N/A	0 Ac.	N/A	N/A	0.013 Ac.	0 Ac.	0 Ac.	0 Ac.
2	L C A ENTERPRISES, LLC	N/A	0 Ac.	N/A	N/A	0.032 Ac.	0.040 Ac.	0 Ac.	0 Ac.

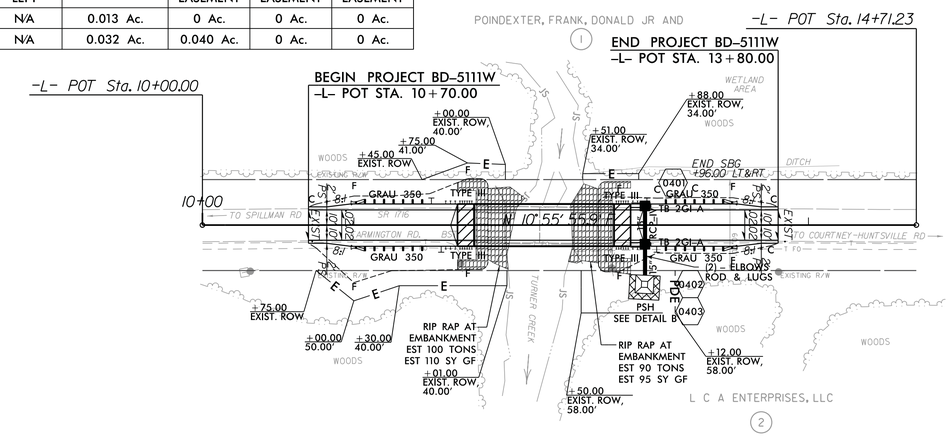

BD5111W-2

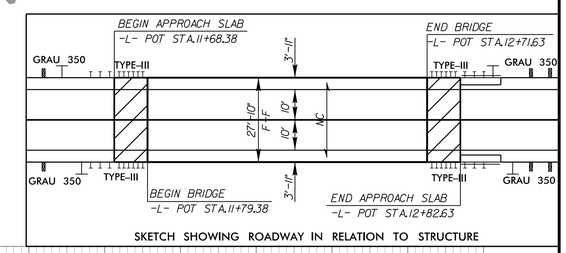

SKETCH SHOWING ROADWAY IN RELATION TO STRUCTURE

DATUM DESCRIPTION

THE LOCALIZED COORDINATE SYSTEM DEVELOPED FOR THIS PROJECT IS BASED ON THE STATE PLANE COORDINATES ESTABLISHED BY NCDOT FOR MONUMENT "BD5111W-2"
WITH NAD 83/NSRS 2007 STATE PLANE GRID COORDINATES OF NORTHING: 843260.2372(ft) EASTING: 1549083.8816(ft)
ELEVATION: 708.2973(ft)
THE AVERAGE COMBINED GRID FACTOR USED ON THIS PROJECT (GROUND TO GRID) IS: 0.9999426954
THE N.C. LAMBERT GRID BEARING AND LOCALIZED HORIZONTAL GROUND DISTANCE FROM "BD5111W-2" TO -L- STATION 10+00.00 IS N 88° 53' 28.50" E 688.35 (ft)
ALL LINEAR DIMENSIONS ARE LOCALIZED HORIZONTAL DISTANCES
VERTICAL DATUM USED IS NAVD 88

BD5111W-2 EL = 708.30'
-L- STA.16+88.23 13.32' LT.
GPS MONUMENT

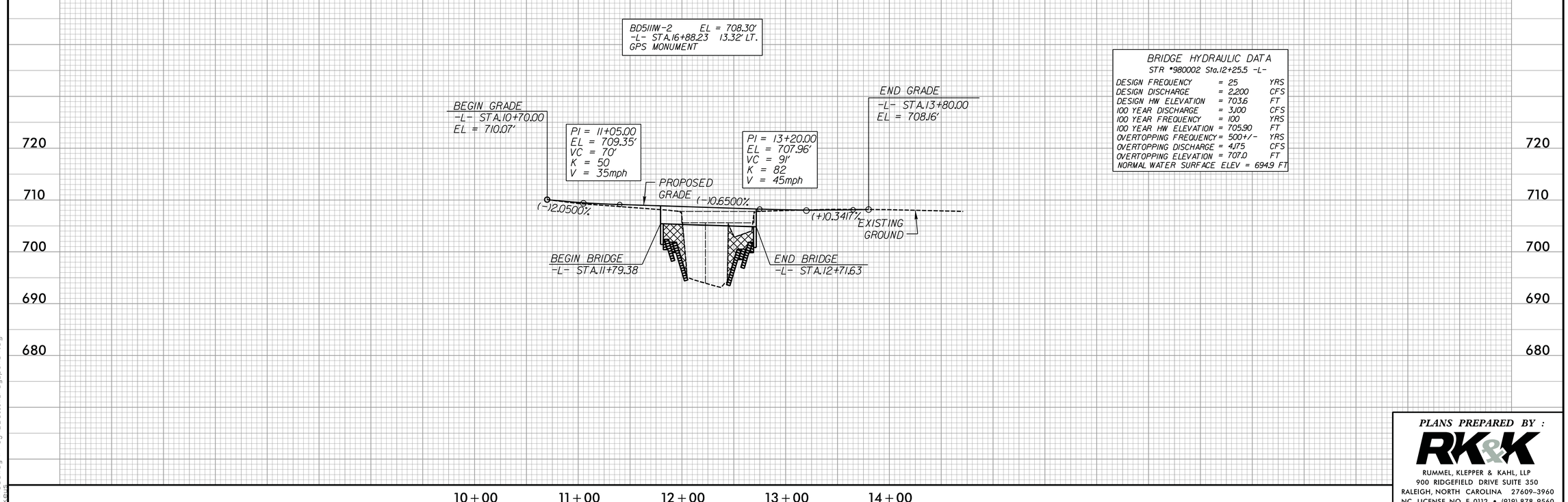

BRIDGE HYDRAULIC DATA
STR #980002 Sta.12+25.5 -L-

DESIGN FREQUENCY	= 25	YRS
DESIGN DISCHARGE	= 2,200	CFS
DESIGN HW ELEVATION	= 703.6	FT
100 YEAR DISCHARGE	= 3,100	CFS
100 YEAR FREQUENCY	= 100	YRS
100 YEAR HW ELEVATION	= 705.90	FT
OVERTOPPING FREQUENCY	= 500+/-	YRS
OVERTOPPING DISCHARGE	= 4,175	CFS
OVERTOPPING ELEVATION	= 707.0	FT
NORMAL WATER SURFACE ELEV	= 694.9	FT

PLANS PREPARED BY :
RK&K
RUMMEL, KLEPPER & KAHL, LLP
900 RIDGEFIELD DRIVE SUITE 350
RALEIGH, NORTH CAROLINA 27609-3960
NC LICENSE NO. F-0112 • (919) 878-9560

4/16/2014
R:\Roadway\Proj\BD5111w_rdy_psh04.dgn

STATE PROJECT REFERENCE NO.	SHEET NO.
BD-5111W	TCP-1

STATE OF NORTH CAROLINA
DIVISION OF HIGHWAYS

PLAN FOR PROPOSED TRAFFIC CONTROL, MARKING & DELINEATION

YADKIN COUNTY

ROADWAY STANDARD DRAWINGS

THE FOLLOWING ROADWAY STANDARDS AS APPEAR IN "ROADWAY STANDARD DRAWINGS"-PROJECT SERVICES UNIT-N.C. DEPARTMENT OF TRANSPORTATION-RALEIGH, N.C., DATED JANUARY 2012 ARE APPLICABLE TO THIS PROJECT AND BY REFERENCE HEREBY ARE CONSIDERED A PART OF THESE PLANS:

STD. NO.	TITLE
1101.03	TEMPORARY ROAD CLOSURES
1101.04	TEMPORARY SHOULDER CLOSURES
1110.01	STATIONARY WORK ZONE SIGNS
1145.01	BARRICADES
1205.01	PAVEMENT MARKINGS - LINE TYPES & OFFSETS
1205.02	PAVEMENT MARKINGS - 2 LANE & MULTILANE ROADWAYS
1205.12	PAVEMENT MARKINGS - BRIDGES
1261.01	GUARDRAIL & BARRIER DELINEATOR SPACING
1261.02	GUARDRAIL & BARRIER DELINEATOR TYPES
1262.01	GUARDRAIL END DELINEATION

PROJECT PHASING

PHASE I

STEP 1: USING ROADWAY STANDARD DRAWING NUMBER 1101.04, SHEET 1 OF 1, STATE FORCES TO INSTALL ALL ADVANCE WARNING SIGNS FOR DETOUR, KEEPING SIGNS COVERED.

WORKING IN A CONTINUOUS MANNER, COMPLETE THE FOLLOWING WORK IN PHASE I, STEP 2.

STEP 2: CLOSE SR 1716, (FARMINGTON RD.) TO TRAFFIC, USING ROADWAY STANDARD DRAWING 1101.03 SHEET 1. UNCOVER ALL ADVANCE WARNING SIGNS FOR ROAD CLOSURE AND SHIFT TRAFFIC TO TEMPORARY DETOUR.

STEP 3: DEMOLISH AND REMOVE EXISTING BRIDGE NO. 2 OVER TURNER CREEK.

STEP 4: COMPLETE CONSTRUCTION OF PROPOSED STRUCTURE, APPROACH ROADWAY WIDENING AND PAVING, (SEE ROADWAY PLANS & STRUCTURAL PLANS).

STEP 5: STATE FORCES TO PLACE FINAL PAVEMENT MARKINGS, (PAINT) ON SR 1716, (FARMINGTON RD.).

WORKING IN A CONTINUOUS MANNER, COMPLETE THE FOLLOWING WORK IN PHASE I, STEP 6.

STEP 6: USING ROADWAY STANDARD DRAWING NO. 1101.04, SHEET 1, THE CONTRACTOR SHALL REMOVE SIGNS AND TRAFFIC CONTROL DEVICES ERECTED IN STEP 2 AND OPEN SR 1716, (FARMINGTON RD.) TO TRAFFIC. STATE FORCES WILL REMOVE OFF SITE DETOUR SIGNING.

FINAL PAVEMENT MARKING SCHEDULE

SYMBOL	DESCRIPTION	QUANTITY BREAKDOWN	PAY ITEM	TOTAL QUANTITY
	PAVEMENT MARKING LINES		PAINT (4")	
PA	WHITE EDGELINE 2X	1280 LF		
PI	YELLOW DOUBLE CENTER 2X	1280 LF		
			TOTAL	2560 LF

2X = TWO APPLICATIONS

PROJECT NOTES

GENERAL NOTES

CHANGES MAY BE REQUIRED WHEN PHYSICAL DIMENSIONS IN THE DETAIL DRAWINGS, STANDARD DETAILS AND ROADWAY DETAILS ARE NOT ATTAINABLE TO MEET FIELD CONDITIONS OR RESULT IN DUPLICATE OR UNDESIRED OVERLAPPING OF DEVICES. MODIFICATION MAY INCLUDE: MOVING, SUPPLEMENTING, COVERING, OR REMOVAL OF DEVICES AS DIRECTED BY THE ENGINEER.

THE FOLLOWING GENERAL NOTES APPLY AT ALL TIMES FOR THE DURATION OF THE CONSTRUCTION PROJECT EXCEPT WHEN OTHERWISE NOTED IN THE PLAN OR DIRECTED BY THE ENGINEER.

TRAFFIC PATTERN ALTERATIONS

A) NOTIFY THE ENGINEER TWENTY ONE (21) CALENDAR DAYS PRIOR TO ANY TRAFFIC PATTERN ALTERATIONS.

SIGNING

B) PROVIDE SIGNING AND DEVICES REQUIRED TO CLOSE THE ROAD ACCORDING TO THE ROADWAY STANDARD DRAWINGS AND TRAFFIC CONTROL PLANS.

STATE FORCES WILL PROVIDE SIGNING REQUIRED FOR THE OFF-SITE DETOUR ROUTE AS SHOWN IN THE TRAFFIC CONTROL PLANS, UNLESS OTHERWISE NOTED.

C) COVER OR REMOVE ALL SIGNS AND DEVICES REQUIRED TO CLOSE THE ROAD WHEN ROAD CLOSURE IS NOT IN OPERATION.

D) ENSURE ALL NECESSARY SIGNING IS IN PLACE PRIOR TO ALTERING ANY TRAFFIC PATTERN.

TRAFFIC CONTROL DEVICES

E) PLACE TYPE III BARRICADES, WITH "ROAD CLOSED" SIGN R11-2 ATTACHED, OF SUFFICENT LENGTH TO CLOSE ENTIRE ROADWAY.

F) STATE FORCES TO INSTALL PAVEMENT MARKINGS ON THE FINAL SURFACE AS FOLLOWS:

	ROAD NAME	MARKING
1.	SR 1716 (FARMINGTON RD.)	PAINT

G) STATE FORCES TO PLACE AT LEAST TWO APPLICATIONS OF PAINT PAVEMENT MARKINGS ON THE FINAL WEARING SURFACE ON NEW ASPHALT PAVEMENT. PLACE ADDITIONAL APPLICATIONS OF PAINT UPON SUFFICENT DRYING TIME, AS DETERMINED BY THE ENGINEER.

H) CONTRACTOR TO MAINTAIN ACCESS TO ALL DRIVEWAYS, WITHIN THE PROJECT LIMITS AT ALL TIMES.

PLANS PREPARED BY :
RK&K
RUMMEL, KLEPPER & KAHL, LLP
900 RIDGEFIELD DRIVE SUITE 350
RALEIGH, NORTH CAROLINA 27609-3960
NC LICENSE NO. F-0112 • (919) 878-9560
FOR DIVISION OF HIGHWAYS

SEAL
NORTH CAROLINA PROFESSIONAL SEAL 21047 ENGINEER KEVIN W. BISBY
May 8, 2013

K. W. BISBY, PE — TRAFFIC CONTROL ENGINEER
M. A. COLE — TRAFFIC CONTROL PROJECT DESIGNER
A. TUTT — TRAFFIC CONTROL PROJECT DESIGNER

TIP PROJECT: YADKIN BD-5111W

5/8/2013
M:\projects\2009\09085_NCDOT_Div_OnCall\P01_Div\BrIdges_GRP4\BD5111W_Yadkin2\Design\Traffic\TrafficControl\TCP\BD5111W_TCP_tcp01.dgn
mcole

PROJ. REFERENCE NO.	SHEET NO.
BD-5111W	TMP-2

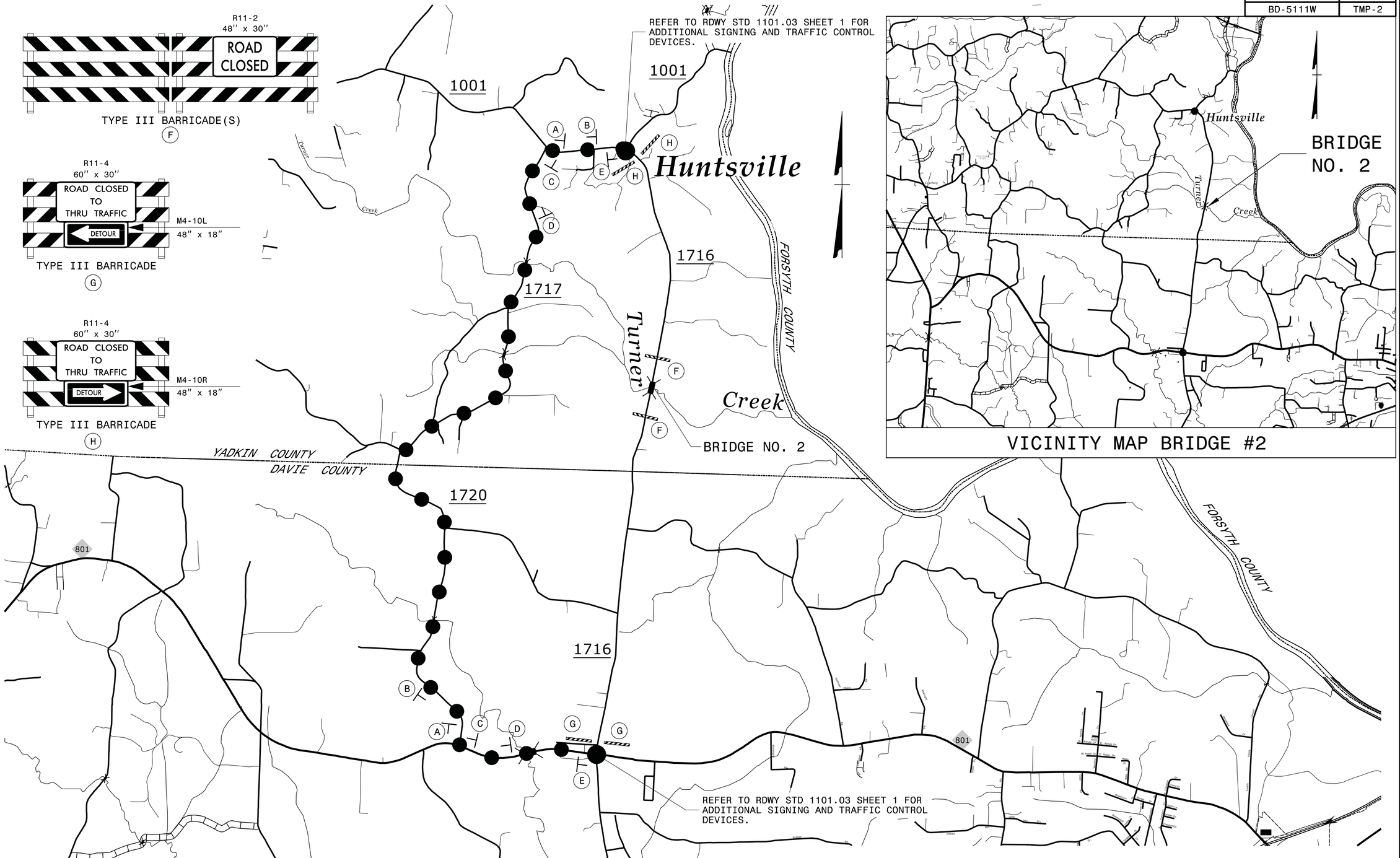

A
SR 1716 24" X 12"
DETOUR M4-8 24" X 12"
M6-1 21" X 15"

B
SR 1716 24" X 12"
DETOUR M4-8 24" X 12"
M5-1 21" X 15"

C
SR 1716 24" X 12"
DETOUR M4-8 24" X 12"
M6-1 21" X 15"

D
SR 1716 24" X 12"
DETOUR M4-8 24" X 12"
M5-1 21" X 15"

E
SR 1716 24" X 12"
END DETOUR M4-8A 24" X 18"

PLANS PREPARED BY :

RK&K

RUMMEL, KLEPPER & KAHL, LLP
900 RIDGEFIELD DRIVE SUITE 350
RALEIGH, NORTH CAROLINA 27609-3960
NC LICENSE NO. F-0112 • (919) 878-9560

APPROVED:_____ DATE:_____

SEAL

NORTH CAROLINA PROFESSIONAL SEAL 20047 ENGINEER KEVIN W. BYSBY

DIVISION OF HIGHWAYS
STATE OF NORTH CAROLINA
DEPARTMENT OF TRANSPORTATION
WORK ZONE TRAFFIC CONTROL

OFFSITE DETOUR
BRIDGE #02
SR 1716

5/8/2013
M:\projects\2009\09085_NCDOT_Div_OnCall\POI_DivIlBridges_GRP4\BD5111W_Yadkin2\Design\Traffic\TrafficControl\TCP\BD5111W_TCP_tcp02.dgn
mcole

EROSION CONTROL PLAN

PROJECT REFERENCE NO.	SHEET NO.
BD-5111W	EC-1/CONST.4
R/W SHEET NO.	
ROADWAY DESIGN ENGINEER	HYDRAULICS ENGINEER

EROSION AND SEDIMENT CONTROL MEASURES

Std. #	Description	Symbol
1630.03	Temporary Silt Ditch	TSD
1630.05	Temporary Diversion	TD
1605.01	Temporary Silt Fence	
1606.01	Special Sediment Control Fence	
1622.01	Temporary Berms and Slope Drains	
1630.02	Silt Basin Type B	
1633.01	Temporary Rock Silt Check Type-A	
	Temporary Rock Silt Check Type-A with Matting and Polyacrylamide (PAM)	
1633.02	Temporary Rock Silt Check Type-B	
	Wattle/Coir Fiber Wattle	SW, CFW
	Wattle/Coir Fiber Wattle with Polyacrylamide (PAM)	
1634.01	Temporary Rock Sediment Dam Type-A	
1634.02	Temporary Rock Sediment Dam Type-B	
1635.01	Rock Pipe Inlet Sediment Trap Type-A	
1635.02	Rock Pipe Inlet Sediment Trap Type-B	
1630.04	Stilling Basin	
1630.06	Special Stilling Basin	
	Rock Inlet Sediment Trap:	
1632.01	Type A	A
1632.02	Type B	B
1632.03	Type C	C
	Skimmer Basin	
	Tiered Skimmer Basin	
	Infiltration Basin	

DETAIL A
RIP RAP AT EMBANKMENT
(Not to Scale)

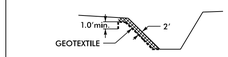

Type of Liner= 190 TONS,CL II Rip-Rap Total
Geotextile= 205 SY Total

FROM STA. 11+88 TO STA. 12+13
FROM STA. 12+42 TO STA. 12+61

NAD 83/NSRS 2007

DETAIL B
PREFORMED SCOUR HOLE
(Not to Scale)

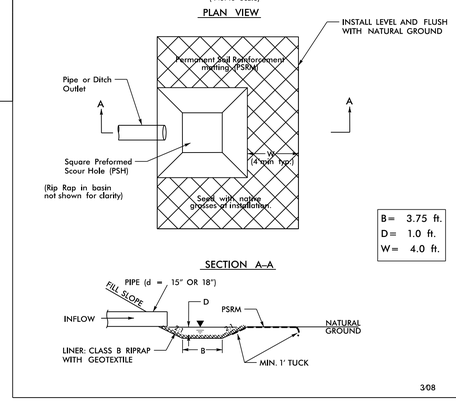

AT STA. 12+94.5 RT

NOTES:
1. CLEARING ON THIS PROJECT SHALL BE PERFORMED TO THE LIMITS ESTABLISHED BY METHOD II.

GRAPHIC SCALES

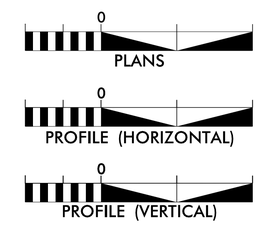

DESIGN SPEED = 55 mph
ADT = 1300 (2009)

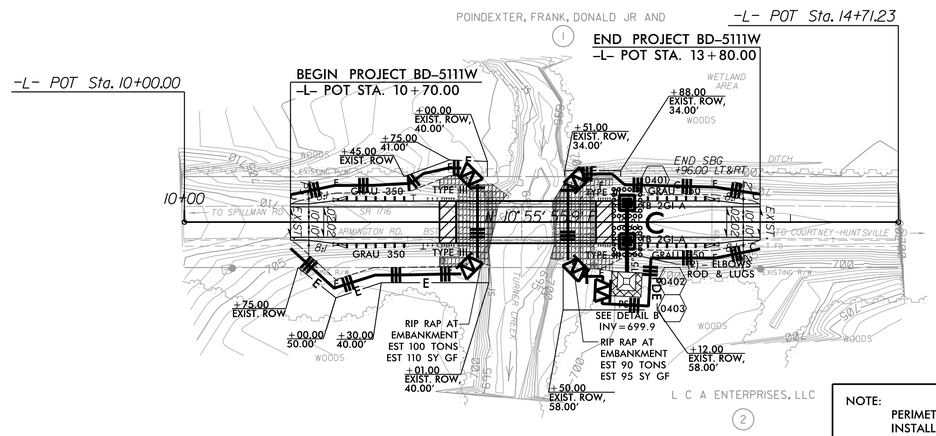

Place Matting for Erosion Control on Slope as Work Allows. Sta. 10+70 to Sta. 13+80

NOTE:
PERIMETER EROSION CONTROL MEASURES SHALL BE INSTALLED DURING CLEARING AND GRUBBING PHASE.

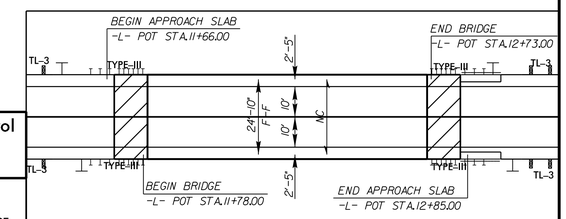

SKETCH SHOWING ROADWAY IN RELATION TO STRUCTURE

2012 STANDARD SPECIFICATIONS

COREY CAVALIER
LEVEL III NAME

3337
LEVEL III CERTIFICATION NO.

NOTES: ANY DEVIATION FROM OPTIONS GIVEN WILL REQUIRE PRIOR APPROVAL BY ENGINEER.

ADDITIONAL EROSION CONTROL DEVICES MAY NEED TO BE INSTALLED AS DIRECTED BY THE ENGINEER.

THESE EROSION AND SEDIMENT CONTROL PLANS COMPLY WITH THE REGULATIONS SET FORTH BY THE NCG-010000 GENERAL CONSTRUCTION PERMIT EFFECTIVE AUGUST 3, 2011 ISSUED BY THE NORTH CAROLINA DEPARTMENT OF ENVIRONMENT AND NATURAL RESOURCES DIVISION OF WATER QUALITY.

2012 STANDARD DRAWINGS

1604.01	Railroad Erosion Control Detail	1632.01	Rock Inlet Sediment Trap Type A
1605.01	Temporary Silt Fence	1632.02	Rock Inlet Sediment Trap Type B
1606.01	Special Sediment Control Fence	1632.03	Rock Inlet Sediment Trap Type C
1607.01	Gravel Construction Entrance	1633.01	Temporary Rock Silt Check Type A
1622.01	Temporary Berms and Slope Drains	1633.02	Temporary Rock Silt Check Type B
1630.01	Riser Basin	1634.01	Temporary Rock Sediment Dam Type A
1630.02	Silt Basin Type B	1634.02	Temporary Rock Sediment Dam Type B
1630.03	Temporary Silt Ditch	1635.01	Rock Pipe Inlet Sediment Trap Type A
1630.04	Stilling Basin	1635.02	Rock Pipe Inlet Sediment Trap Type B
1630.05	Temporary Diversion	1640.01	Coir Fiber Baffle
1630.06	Special Stilling Basin	1645.01	Temporary Stream Crossing
1631.01	Matting Installation		

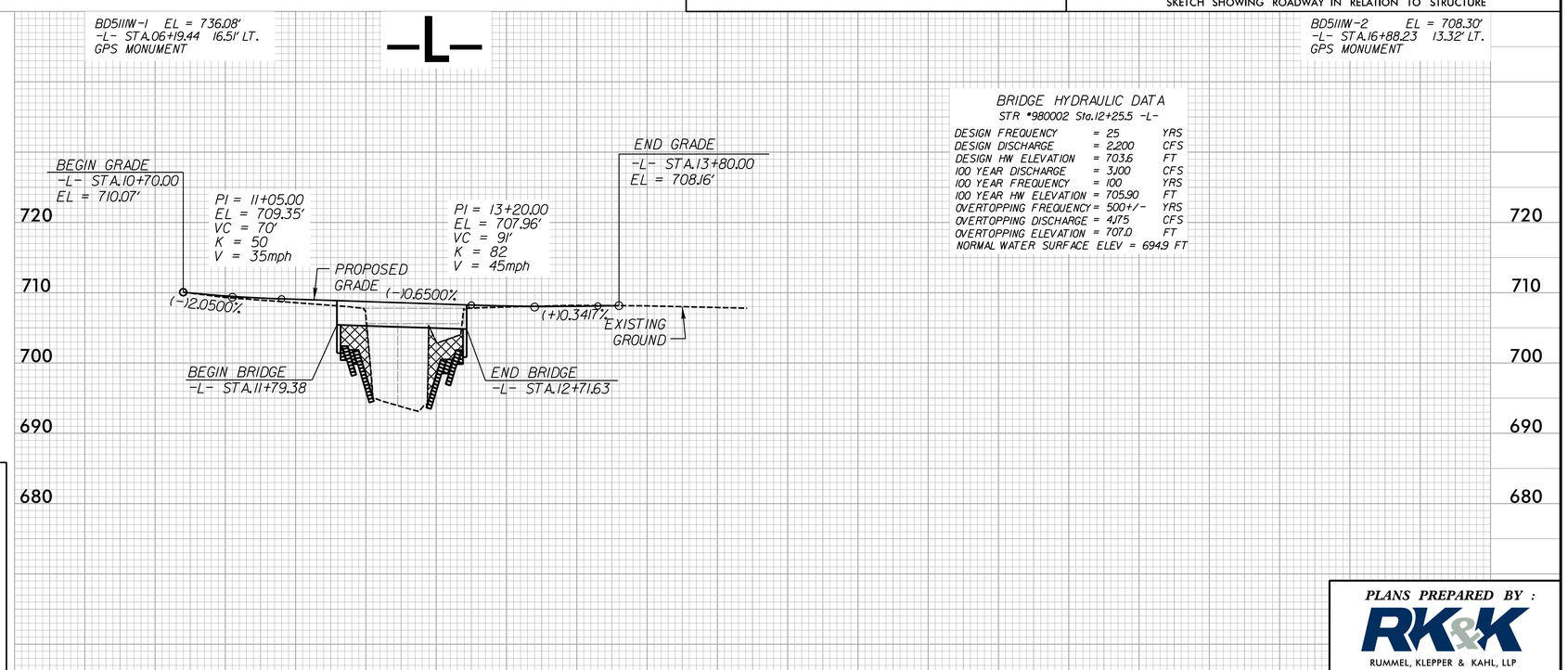

BRIDGE HYDRAULIC DATA
STR #980002 Sta.12+25.5 -L-

DESIGN FREQUENCY	= 25	YRS
DESIGN DISCHARGE	= 2,200	CFS
DESIGN HW ELEVATION	= 703.6	FT
100 YEAR DISCHARGE	= 3,100	CFS
100 YEAR FREQUENCY	= 100	YRS
100 YEAR HW ELEVATION	= 705.90	FT
OVERTOPPING FREQUENCY	= 500+/-	YRS
OVERTOPPING DISCHARGE	= 4,175	CFS
OVERTOPPING ELEVATION	= 707.0	FT

NORMAL WATER SURFACE ELEV = 694.9 FT

PLANS PREPARED BY :
RK&K
RUMMEL, KLEPPER & KAHL, LLP
900 RIDGEFIELD DRIVE SUITE 350
RALEIGH, NORTH CAROLINA 27609-3960
NC LICENSE NO. F-0112 • (919) 878-9560

8/17/99
4/4/2014
R:\Hydraulics\CADD\PSH\BD5111w_hyd_ec01.dgn

PROJECT REFERENCE NO.	SHEET NO.
BD-5111W	EC-2
ROADWAY DESIGN ENGINEER	HYDRAULICS ENGINEER

DIVISION OF HIGHWAYS
STATE OF NORTH CAROLINA

SOIL STABILIZATION TIMEFRAMES

SITE DESCRIPTION	STABILIZATION TIME	TIMEFRAME EXCEPTIONS
PERIMETER DIKES, SWALES, DITCHES AND SLOPES	7 DAYS	NONE
HIGH QUALITY WATER (HQW) ZONES	7 DAYS	NONE
SLOPES STEEPER THAN 3:1	7 DAYS	IF SLOPES ARE 10' OR LESS IN LENGTH AND ARE NOT STEEPER THAN 2:1, 14 DAYS ARE ALLOWED.
SLOPES 3:1 OR FLATTER	14 DAYS	7 DAYS FOR SLOPES GREATER THAN 50' IN LENGTH.
ALL OTHER AREAS WITH SLOPES FLATTER THAN 4:1	14 DAYS	NONE, EXCEPT FOR PERIMETERS AND HQW ZONES.

PROJECT REFERENCE NO.	SHEET NO.
BD-5111W	U0-1

UTILITIES BY OTHERS

NOTE:
ALL PROPOSED UTILITY WORK SHOWN ON THIS SHEET WILL BE DONE BY OTHERS

TYPICAL SECTION

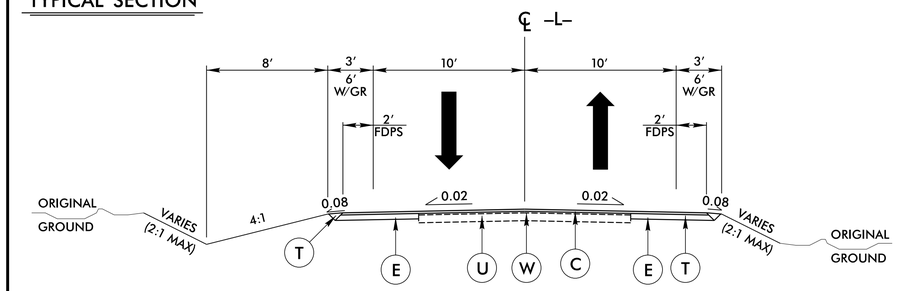

DETAIL A
RIP RAP AT EMBANKMENT
(Not to Scale)

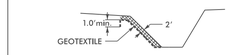

Type of Liner= 190 TONS,CL II Rip-Rap Total
Geotextile= 205 SY Total

FROM STA. 11+88 TO STA. 12+13
FROM STA. 12+42 TO STA. 12+61

NAD 83/NSRS 2007

DETAIL B
PREFORMED SCOUR HOLE
(Not to Scale)

PLAN VIEW

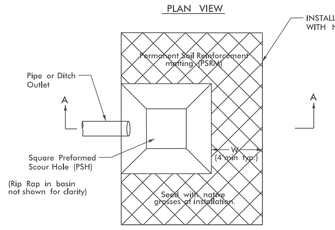

SECTION A-A

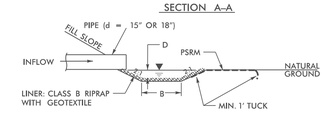

B= 3.75 ft.
D= 1.0 ft.
W= 4.0 ft.

3-08

AT STA. 12+94.5 RT

GRAPHIC SCALES

50 0 50 100
PLANS

50 0 50 100
PROFILE (HORIZONTAL)

10 0 10 20
PROFILE (VERTICAL)

DESIGN SPEED = 55 mph
ADT = 1300 (2009)

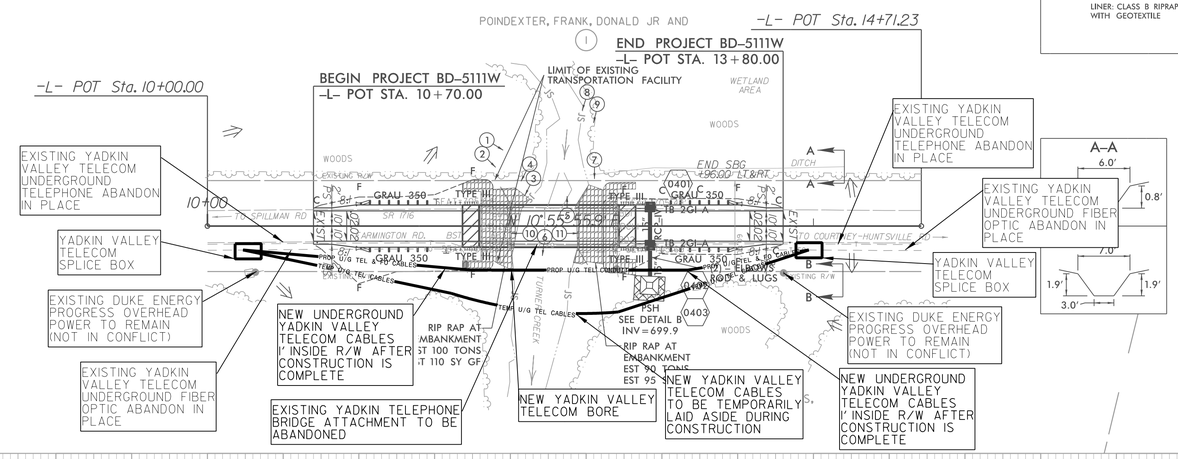

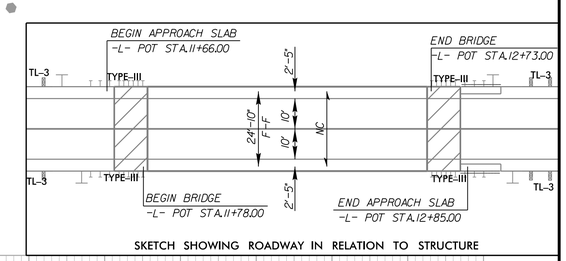

SKETCH SHOWING ROADWAY IN RELATION TO STRUCTURE

DATUM DESCRIPTION

THE LOCALIZED COORDINATE SYSTEM DEVELOPED FOR THIS PROJECT IS BASED ON THE STATE PLANE COORDINATES ESTABLISHED BY NCDOT FOR MONUMENT "BD5111W-2"
WITH NAD 83/NSRS 2007 STATE PLANE GRID COORDINATES OF NORTHING: 843260.2372(ft) EASTING: 1549083.8816(ft)
ELEVATION: 708.2973(ft)
THE AVERAGE COMBINED GRID FACTOR USED ON THIS PROJECT (GROUND TO GRID) IS: 0.9999426954
THE N.C. LAMBERT GRID BEARING AND LOCALIZED HORIZONTAL GROUND DISTANCE FROM "BD5111W-2" TO -L- STATION 10+00.00 IS N 88° 53' 28.50" E 688.35 (ft)
ALL LINEAR DIMENSIONS ARE LOCALIZED HORIZONTAL DISTANCES
VERTICAL DATUM USED IS NAVD 88

BD5111W-2 EL = 708.30'
-L- STA.16+88.23 13.32' LT.
GPS MONUMENT

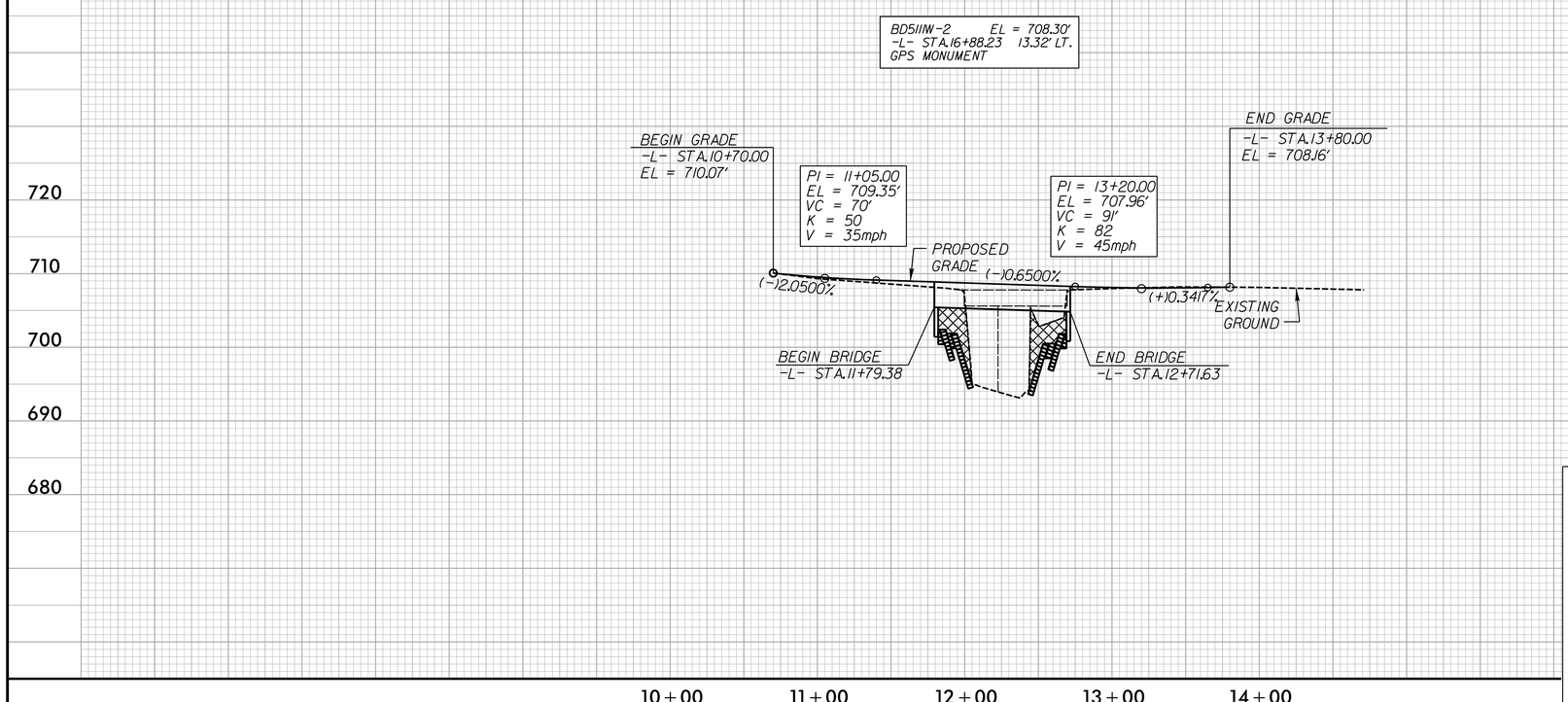

BRIDGE HYDRAULIC DATA
STR #980002 Sta.12+25.5 -L-

DESIGN FREQUENCY	= 25	YRS
DESIGN DISCHARGE	= 2,200	CFS
DESIGN HW ELEVATION	= 703.6	FT
100 YEAR DISCHARGE	= 3,100	CFS
100 YEAR FREQUENCY	= 100	YRS
100 YEAR HW ELEVATION	= 705.90	FT
OVERTOPPING FREQUENCY	= 500+/-	YRS
OVERTOPPING DISCHARGE	= 4,175	CFS
OVERTOPPING ELEVATION	= 707.0	FT
NORMAL WATER SURFACE ELEV	= 694.9	FT

NOTE;

YADKIN VALLEY TELEPHONE TO TEMPORARILY LAY ASIDE FIBER OPTIC DURING CONSTRUCTION AND THEN TO RELOCATE 1' INSIDE THE EXISTING R/W AFTER CONSTRUCTION. YADKIN VALLEY TELECOM TO BORE AGAIN ONLY IF EXISTING BORE IS DAMAGED DURING CONSTRUCTION

UTILITY OWNERS ON PROJECT

DUKE ENERGY – POWER
YADKIN VALLEY TELEPHONE – TELEPHONE/FIBER OPTIC

PLANS PREPARED BY :
RK&K
RUMMEL, KLEPPER & KAHL, LLP
900 RIDGEFIELD DRIVE SUITE 350
RALEIGH, NORTH CAROLINA 27609-3960
NC LICENSE NO. F-0112 • (919) 878-9560

0 2.5 5	PROJ. REFERENCE NO.	SHEET NO.
	BD-5111W	X-1

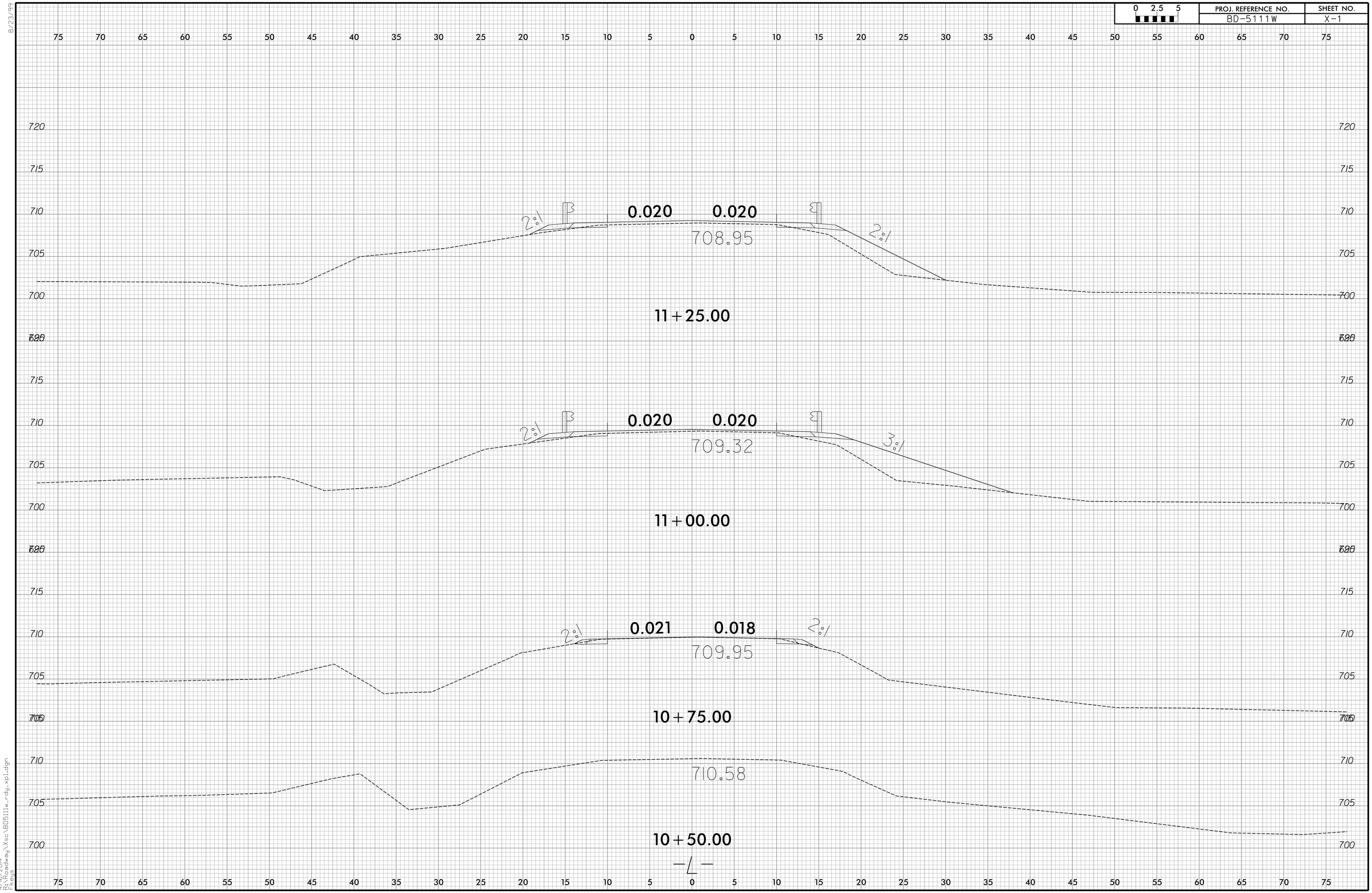

8/23/99

4/16/2014
R:\Roadway\Xsc\BD5111w_rdy_xpl.dgn
F.Kerns

0 2.5 5	PROJ. REFERENCE NO.	SHEET NO.
	BD-5111W	X-2

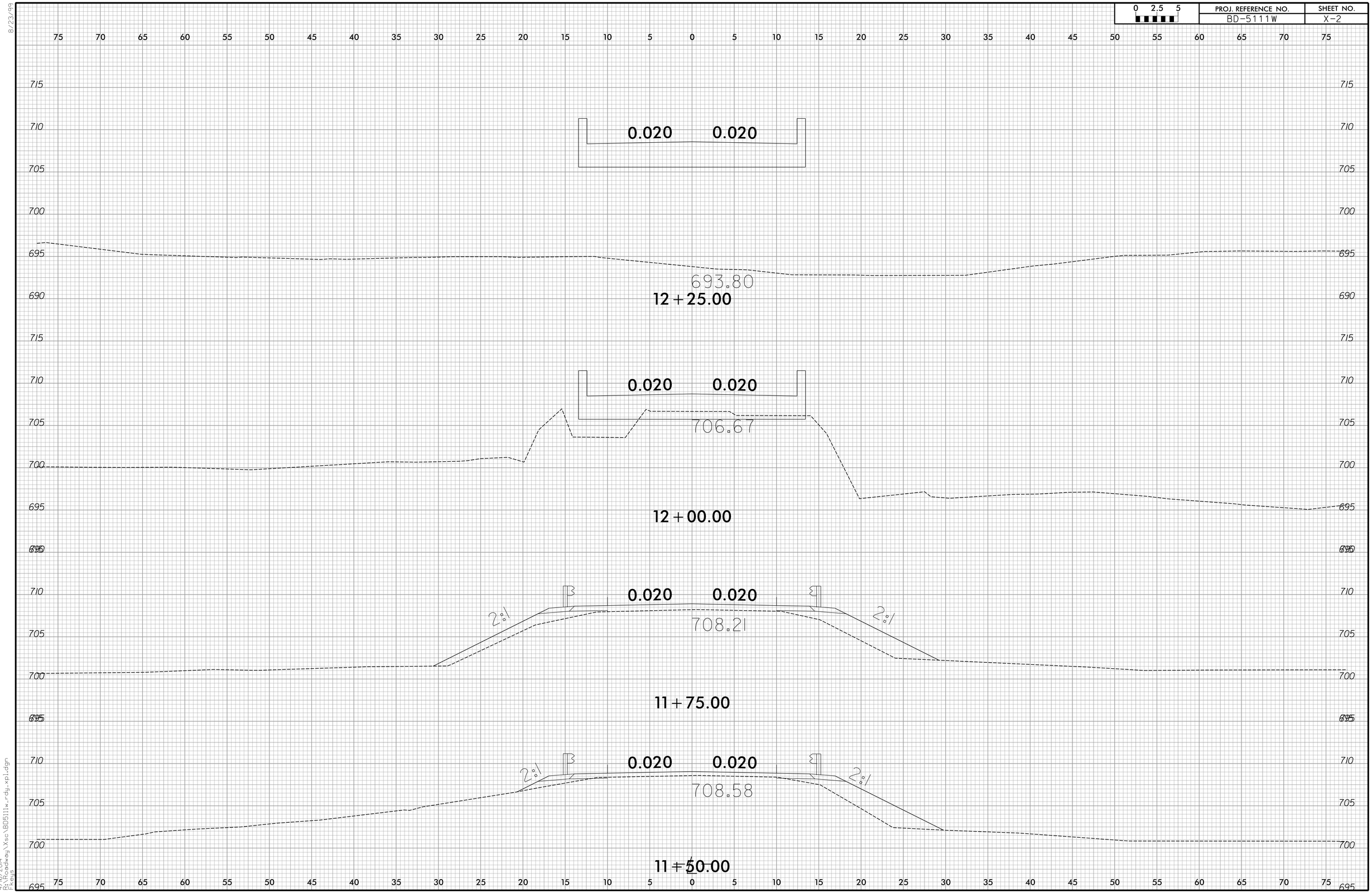

8/23/99

4/16/2014
R:\Roadway\Xsc\BD5111w_rdy_xp1.dgn
F.Keys

0 2.5 5	PROJ. REFERENCE NO.	SHEET NO.
	BD-5111W	X-3

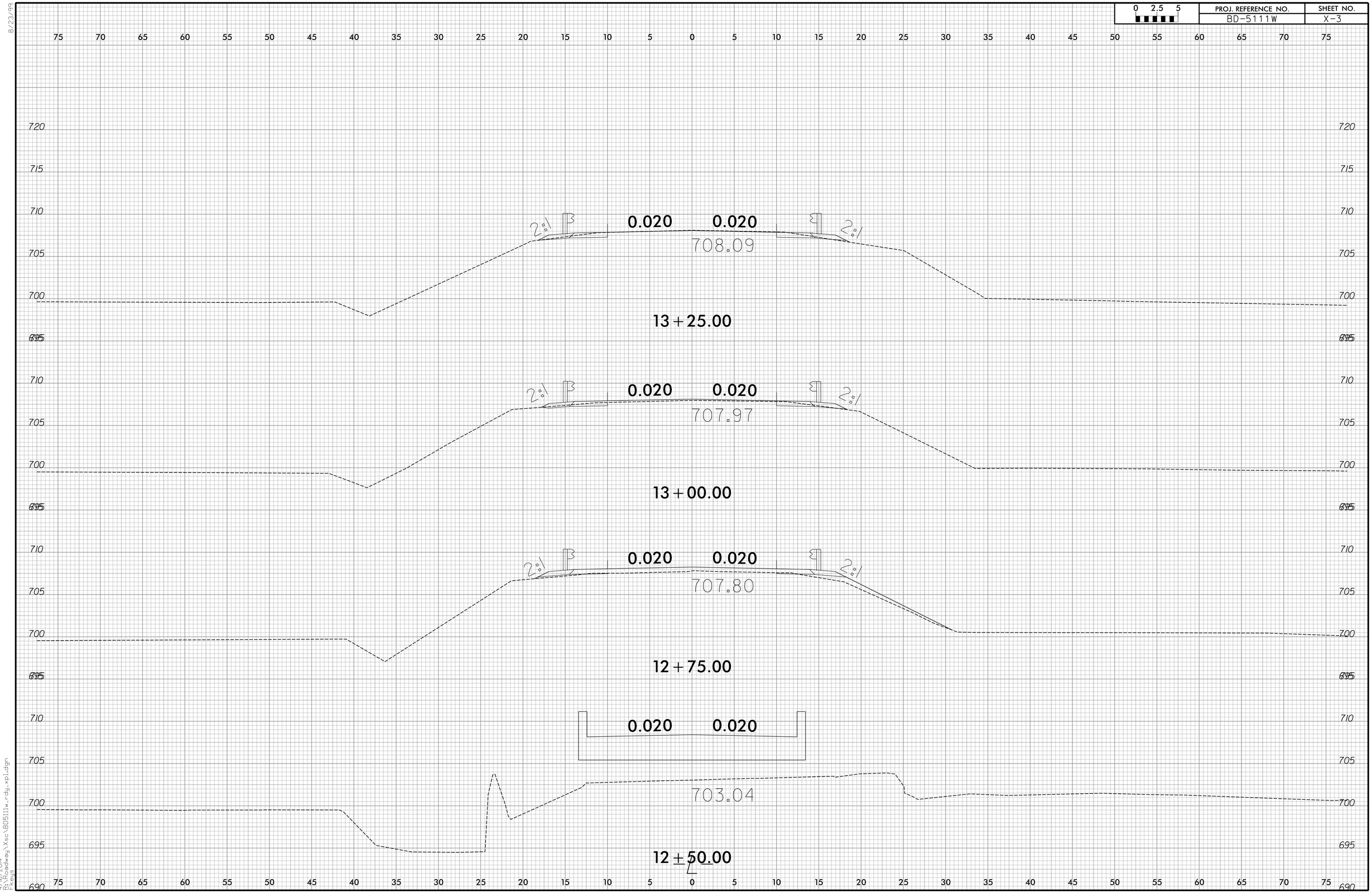

8/23/99

4/16/2014
R:\Roadway\Xsc\BD5111w_rdy_xp1.dgn
F.Keys

8/23/99

0 2.5 5	PROJ. REFERENCE NO.	SHEET NO.
	BD-5111W	X-4

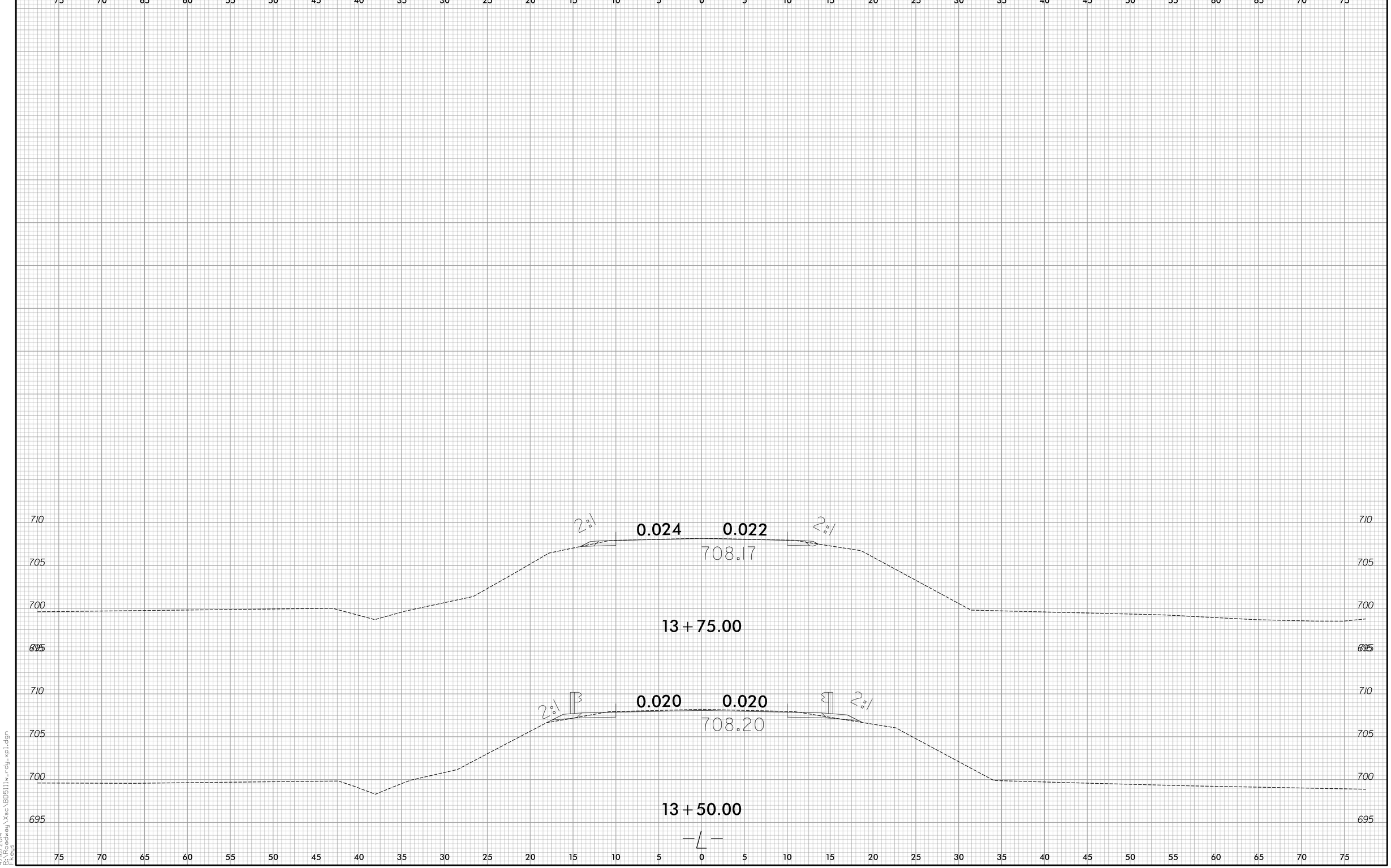

4/16/2014
R:\Roadway\Xsc\BD5111w_rdy_xpl.dgn
F.Keys