STATE OF NORTH CAROLINA

DEPARTMENT OF TRANSPORTATION

DIVISION 11 DISTRICT 2

CONTRACT PROPOSAL

SMALL BUSINESS ENTERPRISE PROJECT

WBS ELEMENT NUMBER: 11C.095055 **CONTRACT:** 11-02-506
ROUTE: SR 1328B **COUNTY:** Watauga
DESCRIPTION: Grading, Drainage and Base on SR 1328B (Brookshire Road) in Watauga County, North Carolina

BID OPENING: April 19, 2012 @ 10:00 AM

NOTICE:

ALL BIDDERS SHALL COMPLY WITH ALL APPLICABLE LAWS REGULATING THE PRACTICE OF GENERAL CONTRACTING AS CONTAINED IN CHAPTER 87 OF THE GENERAL STATUTES OF NORTH CAROLINA WHICH REQUIRES THE BIDDER TO BE LICENSED BY THE N.C. LICENSING BOARD FOR CONTRACTORS WHEN BIDDING ON ANY NON-FEDERAL AID PROJECT WHERE THE BID IS $30,000 OR MORE, EXCEPT FOR CERTAIN SPECIALTY WORK AS DETERMINED BY THE LICENSING BOARD OR SBE PROJECT. BIDDERS SHALL ALSO COMPLY WITH ALL OTHER APPLICABLE LAWS REGULATING THE PRACTICES OF ELECTRICAL, PLUMBING, HEATING AND AIR CONDITIONING AND REFRIGERATION CONTRACTING AS CONTAINED IN CHAPTER 87 OF THE GENERAL STATUTES OF NORTH CAROLINA.

_____

NAME OF BIDDER N.C. CONTRACTOR'S LICENSE NUMBER

_____

ADDRESS OF BIDDER

RETURN BIDS TO:

QUOTE NO: 11-02-506– SR 1328B – WATAUGA COUNTY
N.C. DEPARTMENT OF TRANSPORTATION
JOE L. LAWS, PE, DIVISION PROJECT MANAGER
801 STATESVILLE ROAD
P.O. BOX 250
NORTH WILKESBORO, NORTH CAROLINA 28659

INSTRUCTIONS TO BIDDERS

PLEASE READ ALL INSTRUCTIONS CAREFULLY BEFORE PREPARING AND SUBMITTING YOUR BID

All bids shall be prepared and submitted in accordance with the following requirements. Failure to comply with any requirement shall cause the bid to be considered irregular and shall be grounds for rejection of the bid.

1. The bid sheet furnished by NCDOT with the proposal shall be used and shall not be altered in any manner. **DO NOT SEPARATE THE BID SHEET FROM THE PROPOSAL!**

2. All entries on the bid sheet, including signatures, shall be written in ink.

3. The Bidder shall submit a unit price for every item on the bid form. The unit prices for the various contract items shall be written in figures.

4. An amount bid shall be entered on the bid sheet for every item. The amount bid for each item shall be determined by multiplying each unit bid by the quantity for that item, and shall be written in figures in the "Amount Bid" column of the sheet.

5. The total amount bid shall be written in figures in the proper place on the bid sheet. The total amount shall be determined by adding the amounts bid for each item.

6. Changes in any entry shall be made by marking through the entry in ink and making the correct entry adjacent thereto in ink. A representative of the Bidder shall initial the change in ink.

7. The bid shall be properly executed. All bids shall show the following information:

a. Name of individual, firm, corporation, partnership, or joint venture submitting bid.
b. Name and signature of individual or representative submitting bid and position or title.
c. Name, signature, and position or title of witness.
d. Federal Identification Number (or Social Security Number of Individual)
e. Contractor's License Number (if Applicable)

8. Bids submitted by corporations shall bear the seal of the corporation.

9. The bid shall not contain any unauthorized additions, deletions, or conditional bids.

10. The bidder shall not add any provision reserving the right to accept or reject an award, or to enter into a contract pursuant to an award.

11. **<u>THE PROPOSAL WITH THE BID SHEET STILL ATTACHED</u> SHALL BE PLACED IN A SEALED ENVELOPE AND SHALL HAVE BEEN DELIVERED TO AND RECEIVED IN THE DIVISION ENGINEER'S OFFICE AT 801 STATEVILLE ROAD, P.O. BOX 250,NORTH WILKESBORO, NORTH CAROLINA 28659 BY 10:00 AM ON APRIL19, 2012.**

12. The sealed bid must display the following statement on the front of the sealed envelope:

QUOTE NO: 11-02-506 – SR 1328B – WATAUGA COUNTY

13. If delivered by mail, the sealed envelope shall be placed in another sealed envelope and the outer envelope shall be addressed as follows:

JOE L. LAWS, PE, DIVISION PROJECT MANAGER
N.C. DEPARTMENT OF TRANSPORTATION
P.O. BOX 250
801 STATESVILLE ROAD
NORTH WILKESBORO, NORTH CAROLINA 28659

AWARD OF CONTRACT

The award of the contract, if it be awarded, will be made to the lowest responsible Bidder in accordance with Section 102 of the *2012 Standard Specifications for Roads and Structures*. The lowest responsible Bidder will be notified that his bid has been accepted and that he has been awarded the contract. NCDOT reserves the right to reject all bids.

CONTENTS

General Provisions **5**
GENERAL 5
MANDATORY PRE-BID CONFERENCE AND PROPOSAL REVIEW 5
CONTRACT TIME AND LIQUIDATED DAMAGES 7
MAJOR CONTRACT ITEMS 7
SPECIALTY ITEMS 7
PREPARATION AND SUBMISSION OF BIDS 7
EXECUTION OF SIGNATURE SHEETS AND DEBARMENT CERTIFICATION 8
AWARD LIMITS ON MULTIPLE PROJECTS 8
WORKMEN'S COMPENSATION INSURANCE 9
LICENSES 10
SUBLETTING OF CONTRACT 10
DEFAULT OF CONTRACT 10
PARTIAL PAYMENT 10
RETAINAGE AND PROMPT PAYMENT 11
MANDATORY SUBCONTRACTOR INFORMATION 11
AVAILIBILITY OF FUNDS – TERMINATION OF CONTRACTS 12
LEGAL RELATIONS AND RESPONSIBILITY TO PUBLIC 13
BANKRUPTCY 13
EXTENSION OF CONTRACT TIME 13
CLAIMS FOR ADDITIONAL COMPENSATION OR EXTENSION OF TIME 14
CONTRACTOR CLAIM SUBMITTAL FORM 14
SUBSURFACE INFORMATION 14
PROSECUTION AND PROGRESS 14
TEMPORARY SUSPENSION OF WORK 14
AUTHORITY OF THE ENGINEER 15
APPROVAL OF PERSONNEL 15
SUPERVISION BY CONTRACTOR 16
CONTRACTOR PERSONNEL 16
INSPECTION 16
MATERIALS AND TESTING 16
COOPERATION BETWEEN CONTRACTORS 17
OUTSOURCING OUTSIDE THE USA 17
PLAN, DETAIL AND QUANTITY ADJUSTMENTS 18
POSTED WEIGHT LIMITS 18
UTILITY CONFLICTS 18

Special Provisions **20**
NOTES TO CONTRACTOR 20
PRECONSTRUCTION CONFERENCE 20
NOTIFICATION OF OPERATIONS 20
EMPLOYMENT 20
HOURS OF WORK 21
CONTRACT BID QUANTITIES 21
DRIVEWAYS AND PRIVATE PROPERTY 21
PROOF ROLLING 21
SHOULDER AND FILL SLOPE MATERIAL 22
AGGREGATE PRODUCTION 22
INCIDENTAL STONE BASE 23
BORROW AND WASTE SITE RECLAMATION PROCEDURES 23

AGGREGATE GRADATION FOR COARSE AGGREGATE 24
TRAFFIC CONTROL 25
WORK ZONE SIGNING 26
EROSION AND SEDIMENT CONTROL/STORMWATER CERTIFICATION 28
INFILTRATION BASIN WITH BAFFLES 33
COIR FIBER MAT 35
WATTLES WITH POLYACRYLAMIDE (PAM) 36
EROSION, SILTATION, AND POLLUTION CONTROL 38
ENVIRONMENTAL STEWARDSHIP AND PERFORMANCE OF EROSION CONTROL 38
ENVIRONMENTAL NOTES TO CONTRACTOR 39
STABILIZATION REQUIREMENTS 41
PERMANENT SEEDING AND MULCHING 41
SEEDING AND MULCHING (West) 42
PLANT AND PEST QUARANTINES 43
NCDOT GENERAL SEED SPECIFICATION FOR SEED QUALITY 44
ERRATA 47
MINIMUM WAGES 48
BID FORM 49
BID FORM 50
EXECUTION OF BID 51
DEBARMENT CERTIFICATION 57
LISTING OF MB & WB SUBCONTRACTORS 60

APPENDIX - A PLANS, TYPICAL SECTION

APPENDIX - B PERMITS

APPENDIX - C R/W INFORMATION

APPENDIX - D VICINITY MAP

DIVISION CONTRACT
General Provisions

GENERAL

This is a Small Business Enterprise Project.

This contract is for grading, drainage, and base on SR 1328B (Brookshire Road) in Watauga County under the provisions of North Carolina Department of Transportation's Small Business Enterprise Program. Your firm does not have to be formally identified as a minority, woman, or disadvantaged business to qualify for this program, but your business must have had an annual income of $1,500,000 or less for the previous calendar year (not including costs for materials). Under the provisions of this Program, contract payment and contract performance bonds are not required.

You must be registered as a Small Business Enterprise through the North Carolina Department of Transportation Contractual Services Unit to be eligible to bid on any SBE project. For more information on becoming registered with the Department, please contact the Office of Contractual Services at (919) 733-5616.

The quantities shown in the itemized proposal for the project are considered to be approximate only and are given as the basis for comparison of bids. The Department of Transportation may increase or decrease the quantity of any item or portion of the work as may be deemed necessary or expedient. An increase or decrease in the quantity of any item will not be regarded as sufficient ground for an increase or decrease in the unit prices, nor in the time allowed for the completion of the work, except as provided for in the contract.

All work and materials shall be in accordance with the provisions of the General Guidelines of this contract, the Project Special Provisions, the *North Carolina Department of Transportation Standard Specifications for Roads and Structures*, the *North Carolina Department of Transportation Roadway Standards Drawings*, and the current edition of the *Manual of Uniform Traffic Control Devices (MUTCD)*. These manuals may be found on the internet at:

http://www.ncdot.gov/doh/preconstruct/ps/specifications/2012draft.pdf

http://www.ncdot.gov/doh/preconstruct/ps/std_draw/default.html

http://mutcd.fhwa.dot.gov/

MANDATORY PRE-BID CONFERENCE AND PROPOSAL REVIEW

In order for all prospective bidders to have an extensive knowledge of the project, all prospective bidders shall attend a mandatory pre-bid conference as shown below:

Date and Time: April 11, 2012 at 10:00 AM
Place: NCDOT Watauga County Maintenance Engineer's Office

Location: 1865 Jefferson Highway, Boone, North Carolina 28607
Contact for Directions: Ken Lisk– 828-265-5380

The Mandatory Pre-Bid Conference will begin promptly at **10:00 AM**. An official clock for the pre-bid conference will be designated. Contractors who are late will not be permitted to sign in or to participate in the conference.

Bidders are expected to make their own investigation of the site prior to the conference.

No questions concerning the project will be answered by any Department personnel at any time, except at the Mandatory Pre-Bid Conference.

This conference will be conducted by Department personnel to ensure all prospective bidders are given an opportunity to obtain information relevant to the project and given an opportunity to ask any questions they may have.

The Engineer will explain areas of responsibility, standards of performance and expected results. This is also intended to be a time for the Contractor to raise questions as to the present condition of the facility. The Contractor is encouraged to make his/her own observations of the sites to determine the condition of the items identified in this contract as the Contractor's responsibility. Any changes made to the contract during the pre-bid conference will be documented and included in an addendum. The entire addendum must be returned with the bid package, signed and dated. Failure to do so will result in disqualification of bid.

Eligibility to Bid

All prospective bidders at the Mandatory Pre-Bid Conference shall meet all of the requirements as shown below:

1. Only Bidders who have attended the entire conference and properly registered at the Mandatory Pre-Bid Conference will be considered eligible to bid on this project. A bid received from a Bidder who has not attended and properly registered at the conference will be rejected as an irregular bid and will not be considered for award.

2. Attendance at the Mandatory Pre-Bid Conference will not meet the requirements of proper registration unless the individual attending has registered at the conference in accordance with the following:

    - The individual attending the Mandatory Pre-Bid Conference is a full time employee of the company being represented and has **administrative and/or supervisory** authority over the work to be performed under this contract.
    - The individual signs his/her name and company title on the official roster.
    - The individual writes in the name and address of the company he or she represents.
    - Only one company is shown as being represented by the individual attending.
    - The individual shall sign out when the conference is over.

Attendance at any prior pre-bid conference will not meet the requirement of this provision.

CONTRACT TIME AND LIQUIDATED DAMAGES

The date of availability is April 30, 2012.

No work will be permitted and no contract will be executed until all required bonds and prerequisite conditions and certifications have been satisfied. No work will be permitted prior to issuance of the purchase order.

The completion date for this project is June 30, 2012. No extensions will be authorized except as authorized by Article 108-10 of the *2012 Standard Specifications.*

Except where otherwise provided by the contract, observation periods required by the contract will not be a part of the work to be completed by the completion date and/or intermediate contract times stated in the contract. The acceptable completion of the observation periods that extend beyond the final completion date shall be a part of the work covered by the performance and payment bonds.

Liquidated damages for this contract are Three Hundred and Fifty Dollars ($350.00) per calendar day.

MAJOR CONTRACT ITEMS

The following listed items are the major contract items for this contract (See Articles 101 and 104-5 of the *2012 Standard Specifications*):

Line #	Description
5	Aggregate Base Course

SPECIALTY ITEMS

Items listed below will be the specialty items for this contract (see Article 108-6 of the *2012 Standard Specifications*).

Line #	Description
7	Fence Reset
8 thru 22	Erosion Control Items

PREPARATION AND SUBMISSION OF BIDS

The entire bid proposal package, properly signed and executed, must be returned in order for the bid to be considered as responsive. **Incomplete proposal packages may be considered unresponsive.** Bid proposals shall be completed in ink and any corrections shall have one strike through with the correction initialed by the bidder.

All bids shall be prepared and submitted in accordance with the listed requirements of Article 102-8 of the *2012 Standard Specifications*.

In accordance with GS 136-28.10, if the total bid amount of the contract exceeds **$500,000**, the bid will not be considered for award.

EXECUTION OF SIGNATURE SHEETS AND DEBARMENT CERTIFICATION

The Bidder's attention is directed to the various sheets in the proposal form, which are to be signed by the Bidder. A list of these sheets is shown below. The signature sheets are located behind the item sheets in the proposal form.

1. Bid Form
2. Non collusion affidavit
3. Bidder Certification of MB/WB, if applicable

The Bidder shall certify his and to the best of his knowledge all subcontractors, material suppliers and vendors utilized herein current status concerning suspension, debarment, voluntary exclusion, or determination of ineligibility by any federal agency, in accordance with the "Debarment Certification" located behind the signature sheets in the proposal forms. Execution of the bid signature sheets in conjunction with any applicable statements concerning exceptions, when such statements have been made on the "Debarment Certification", constitutes the Bidders certification of "status" under penalty of perjury under the laws of the United States.

AWARD LIMITS ON MULTIPLE PROJECTS

It is the desire of the Proposer to be awarded contracts, the value of which will not exceed a total of $_____, for those projects indicated below on which bids are being opened on the same date as shown in the Proposal Form. Individual projects shall be indicated by placing the project number and county in the appropriate place below. Projects not selected will not be subject to an award limit.

_____	_____
(Project Number)	(County)
_____	_____
(Project Number)	(County)
_____	_____
(Project Number)	(County)

*If a Proposer desires to limit the total amount of work awarded to him in this letting, he shall state such limit in the space provided above in the second line of this form.

It is agreed that in the event that I am (we are) the successful bidder on indicated projects, the total value of which is more that the above stipulated award limits, the Board of Transportation will award me (us) projects from among those indicated which have a total value not exceeding the award limit and which will result in the best advantage to the Department of Transportation.

_____

**Signature of Authorized Person

**Only those persons authorized to sign bids under the provisions of Article 102-8, Item 7, shall be authorized to sign this form.

WORKMEN'S COMPENSATION INSURANCE

The contractor shall defend, indemnify and hold harmless the North Carolina Department of Transportation, its officers and employees from any claim, demand, suit, liability, judgment and expense (including attorney's fees and other costs of litigation) arising out of or relating to injury, disease, or death of persons or damage to or loss of property resulting from or in connection with the negligent performance of this contract by the contractor, its agents, employees, and subcontractors or any one for whom the contractor may be responsible. The obligations, indemnities and liabilities assumed by the contractor under this paragraph shall not extend to any liability caused by the negligence of the Department of Transportation or its employees. The contractor's liability shall not be limited by any provisions or limits of insurance set forth in this contract.

The contractor shall indemnify and hold harmless the Department of Transportation from any claim, demand, suit, liability, judgment, and expense involving damage or loss to the contractor's equipment (including vandalism, theft, fire and acts of God) arising out of or relating to work performed under this agreement. The obligations, indemnities and liabilities assumed by the contractor under this paragraph shall not extend to any liability caused by the negligence of the Department of Transportation or its employees. The contractor's liability shall not be limited by any provisions or limits of insurance set forth in this contract.

The contractor further agrees to indemnify the Department of Transportation for any damages to the roadway, highway signs, highway equipment and other property owned or in possession of the Department of Transportation, brought about by reason of the negligent operation of the leased equipment. The contractor further agrees to indemnify and save harmless the Department of Transportation, its officers and employees from any claims or amounts recovered by any of the contractor's employees under the Worker's Compensation Act.

Pursuant to N.C.G.S. § 97-19, all contractors of the Department of Transportation are, prior to beginning services, required to show proof of coverage issued by a workers' compensation insurance carrier, or a certificate of compliance issued by the Department of Insurance for self-insured subcontractors stating that it has complied with N.C.G.S. § 97-93 irrespective of whether subcontractors have regularly in service fewer than three employees in the same business within the State of North Carolina, and subcontractors shall be hereinafter liable under the Workers'

Compensation Act for payment of compensation and other benefits to its employees for any injury or death due to an accident arising out of and in the course of performance of the work insured by the subcontractor.

Proof of insurance shall be furnished to the Engineer prior to beginning work.

LICENSES

Under the provisions of the North Carolina Department of Transportation's Small Business Enterprise Program, the contractor is **not required to possess a contractor's license** to perform work on this contract.

SUBLETTING OF CONTRACT

The Contractor shall not sublet, sell, transfer, assign or otherwise dispose of this contract or any portion thereof; or his right, title, or interest therein; without written consent of the Engineer. Subletting of this contract or any portion of the contract shall conform to the requirements of Article of 108-6 of the *2012 Standard Specifications.*

DEFAULT OF CONTRACT

The Department of Transportation shall have the right to declare a default of contract for breach by the Contractor of any material term or condition of the contract. Default of contract shall be in accordance with the terms, conditions, and procedures of Article 108-9 of the *2012 Standard Specifications.*

PARTIAL PAYMENT

The Contractor may submit a request for payment at the end of each work request. Compensation for all pay items shall be in accordance with the *Standard Specifications*. One hundred percent (100%) payment shall be made after successful completion of the work as verified by the final inspection.

Requests for payment can be made on the form furnished to the Contractor by the Department of Transportation. The form shall be completely and legibly filled out with all appropriate information supplied and shall be signed by an authorized representative of the Contractor.

All invoice items and unit costs shall correspond to contract pay items. In the event of error or discrepancy in items or unit costs, the Department may return the invoice to the contractor for correction. Invoices must be "electronically scanned" by our office and the image is transmitted to the Purchasing Unit to verify payment. To avoid confusion and delay of payments each invoice should have a **Unique Invoice Number**, i.e. 1, 2, 3⋯. In addition, the invoice should be

positively identified and associated with the Purchase Order by including the **Purchase Order Number** on the Invoice.

Minority Business Enterprise (MBE), Women's Business Enterprise (WBE) and/or Disadvantage Business Enterprise (DBE) participation shall be listed on the appropriate form (DBE-IS) and shall accompany all requests for payment. If there is no participation the word **"None"** or the figure **"0"** shall be entered. Requests for payment will not be processed without the submission of the DBE-IS form. One hundred percent (100%) payment shall be made after successful completion of the work as verified by the final inspection.

RETAINAGE AND PROMPT PAYMENT

Prompt Payment of Monies Due Subcontractors, Second Tier Subcontractors and Material Suppliers and Release of Retainage

Contractors at all levels; prime, subcontractor, or second tier contractor, shall within seven calendar days of receipt of monies, resulting from work performed on the project or services rendered, pay subcontractors, second tier subcontractors, or material suppliers, as appropriate. This seven-day period begins upon knowledgeable receipt by the contracting firm obligated to make a subsequent periodic or final payment. These prompt payment requirements will be met if each firm mails the payment to the next level firm by evidence of postmark within the seven-day period.

This provision for prompt payment shall be incorporated into each subcontract or second tier subcontract issued for work performed on the project or for services provided.

The Contractor may withhold up to 3% retainage if any subcontractor does not obtain a payment and performance bond for their portion of the work. If any retainage is held on subcontractors, all retainage shall be released within seven calendar days of satisfactory completion of all work. For the purpose of release of retainage, satisfactory completion is defined as completion of all physical elements and corresponding documentation as defined in the contract, as well as agreement between the parties as to the final quantities for all work performed in the subcontract. The Department will provide internal controls to expedite the determination and processing of the final quantities for the satisfactorily completed subcontract portions of the project.

Failure of any entity to make prompt payment as defined herein may result in (1) withholding of money due to that entity in the next partial payment until such assurances are made satisfactory to this provision; or (2) removal of an approved contractor from the prequalified bidders list or the removal of other entities from the approved subcontractors list.

MANDATORY SUBCONTRACTOR INFORMATION

The Contractor is to provide a list of all proposed subcontractors he or she plans to use on this project. This list shall include all subcontractors that will be used, not only MBE, WBE or DBE

firms. Only pre-approved subcontractors that are registered with the NCDOT may be used. A listing of all contractors (prime or subcontractor) may be found at the following website: https://partner.ncdot.gov/VendorDirectory/default.html

Subcontract Approval Form (Form SAF) must be completed for each subcontractor that will be used and returned prior to the issuance of the purchase order. This form can be found at the following website:
http://www.ncdot.org/doh/operations/dp_chief_eng/constructionunit/saf.xls

If the proposed subcontractor cannot fulfill their obligation and a substitute must be used, then an appropriate form for the replacement subcontractor must delivered to the administrating officer before the new subcontractor is used.

Failure to provide this information (regardless of any goals in contract) may result in the contract being awarded to another contractor.

AVAILIBILITY OF FUNDS – TERMINATION OF CONTRACTS

General Statute 143C-6-11. (h) Highway Appropriation is hereby incorporated verbatim in this contract as follows:

(h) Amounts Encumbered. – Transportation project appropriations may be encumbered in the amount of allotments made to the Department of Transportation by the Director for the estimated payments for transportation project contract work to be performed in the appropriation fiscal year. The allotments shall be multiyear allotments and shall be based on estimated revenues and shall be subject to the maximum contract authority contained in *General Statute 143C-6-11(c)*. Payment for transportation project work performed pursuant to contract in any fiscal year other than the current fiscal year is subject to appropriations by the General Assembly. Transportation project contracts shall contain a schedule of estimated completion progress, and any acceleration of this progress shall be subject to the approval of the Department of Transportation provided funds are available. The State reserves the right to terminate or suspend any transportation project contract, and any transportation project contract shall be so terminated or suspended if funds will not be available for payment of the work to be performed during that fiscal year pursuant to the contract. In the event of termination of any contract, the contractor shall be given a written notice of termination at least 60 days before completion of scheduled work for which funds are available. In the event of termination, the contractor shall be paid for the work already performed in accordance with the contract specifications.

Payment will be made on any contract terminated pursuant to the special provision in accordance with Article 108-13(E), of the *North Carolina Department of Transportation Standard Specifications for Roads and Structures, dated January 2012.*

LEGAL RELATIONS AND RESPONSIBILITY TO PUBLIC

Laws to be Observed

In accordance with 107-1 of the *Standard Specifications*, The Contractor shall keep himself fully informed of all Federal and State laws, all local laws, ordinances, and regulations, and all orders and decreed of bodies or tribunals having any jurisdiction or authority which may in any manner affect those engaged or employed in the work, or which in any way affect the conduct of the work. He shall at all times observe and comply with all such laws, ordinances, regulations, orders, and decrees; and shall indemnify and hold harmless the Board of Transportation and the Department of Transportation and their agents and employees from any claim or liability arising from or based on the violation of any such law, ordinance, regulations, order, or decree, by the Contractor or by his agents and employees.

Responsibility For Damage Claims

In accordance with 107-14 of the *Standard Specifications*, The Contractor shall indemnify and save harmless the Board of Transportation and its members and the Department of Transportation and its officers, agents, and employees from all suits, actions, or claims of any character brought for any injury or damages received or sustained by any person, persons, or property by reason of any act of the Contractor, Subcontractor, its agents or employees, in the performance of the contract.

Safety and Accident Protection

In accordance with 107-21 of the *Standard Specifications*, The Contractor shall comply with all applicable Federal, State, and local laws, ordinances, and regulations governing safety, health, and sanitation, and shall provide all safeguards, safety devices, and protective equipment, and shall take any other needed actions, on his own responsibility that are reasonably necessary to protect the life and health of employees on the job and the safety of the public, and to protect property in connection with the performance of the work covered by the contract.

All Contractors' personnel, all subcontractors and their personnel, and any material suppliers and their personnel shall wear a reflective vest or outer garment conforming to the requirements of MUTCD at all times while on the project.

BANKRUPTCY

The Department of Transportation, at its option, may terminate the contract upon the filing by the contractor of any petition for protection under the provisions of the Federal Bankruptcy Act.

EXTENSION OF CONTRACT TIME

Failure on the part of the Contractor to furnish bonds or certifications or to satisfy preliminary requirements necessary to issue the purchase order will not constitute grounds for extension of

the contract time. If the Contractor has fulfilled all preliminary requirements for the issuance of a purchase order, and the purchase order authorization is not available by the date of availability, the Contractor shall be granted an extension equal to the number of calendar days the purchase order authorization is delayed after the date of availability.

CLAIMS FOR ADDITIONAL COMPENSATION OR EXTENSION OF TIME

Any claims for additional compensation and/or extensions of the completion date shall be submitted to the Division Engineer with detailed justification within thirty (30) days after receipt of the final invoice payment. The failure of the Contractor to submit the claim(s) within thirty days shall be a bar to recovery.

CONTRACTOR CLAIM SUBMITTAL FORM

If the Contractor elects to file a written claim or requests an extension of contract time, it shall be submitted on the Contractor Claim Submittal Form (CCSF) available through the Construction Unit or http://ncdot.org/doh/operations/dp_chief_eng/constructionunit/formsmanuals/.

SUBSURFACE INFORMATION

There is no subsurface information available on this project. The Contractor shall make his own investigation of subsurface conditions.

PROSECUTION AND PROGRESS

The Contractor will be required to prosecute the work in a continuous and uninterrupted manner from the time he begins the work until completion and final acceptance of the project. The contractor will not be permitted to suspend his operations except for reasons beyond his control except where the Engineer has authorized a suspension of the contractor's operations in writing.

The Contractor shall pursue the work diligently with workmen in sufficient numbers, abilities, and supervision, and with equipment, materials, and methods of construction as may be required to complete the work described in the contract by the completion date and in accordance with Section 108 of the *Standard Specifications.*

TEMPORARY SUSPENSION OF WORK

In accordance with Article 108-7 of the *2012 Standard Specifications*, the Engineer will have the authority to suspend the work wholly or in part, any written order for such periods as he may deem necessary for any of the following reasons.

1. Conditions considered unfavorable for the suitable prosecution of the work, or

2. The Contractor's failure for correct conditions unsafe for workmen or the general public, or

3. The Contractor has not carried out orders given to him by the Engineer, or

4. The Contractor's failure to perform any provisions of the contract.

No extension of the completion date will be allowed for the above suspensions except as may be provided for in Article 108-10.

AUTHORITY OF THE ENGINEER

The Engineer for this project shall be the Division Engineer, Division 11, Division of Highways, North Carolina Department of Transportation, acting directly or through his duly authorized representatives.

The Engineer will decide all questions which may arise as to the quality and acceptability of work performed and as to the rate of progress of the work; all questions which may arise as to the interpretation of the contract; and all questions as to the acceptable fulfillment of the contract on the part of the Contractor. His decision shall be final, and he shall have executive authority to enforce and make effective such decisions and orders as the Contractor fails to carry out promptly.

APPROVAL OF PERSONNEL

The State shall have the right to approve or reject the project engineer and other supervisory personnel, assigned to a project.

The Engineers or any subcontractor for the Engineers which are employed to provide engineering services for this project shall not engage the services of any person or persons, now in the employment of the State during the time of this Agreement, without written consent of the State.

In the event of engagement, the Engineers or their subcontractors shall restrict such person or persons from working on any of the Engineers' contracted projects in which the person or persons were formerly involved while employed by the State. This restriction period shall be for the duration of the contracted project with which the person or persons was involved. "Involvement" shall be defined as active participation in any of the following activities:

- Drafting the contract;
- Defining the scope of the contract;
- Selection of the Engineers' firm for services;
- Negotiation of the cost of the contract (including calculating man-hours or fees); and
- Administration of the contract.

An exception to these terms may be granted when recommended by the Secretary and approved by the Board of Transportation. Failure to comply with the terms stated above in this section shall be grounds for termination of this contract.

SUPERVISION BY CONTRACTOR

At all times during the life of the project the Contractor shall provide one permanent employee who shall have the authority and capability for overall responsibility of the project and who shall be personally available at the work site within 24 hours notice. Such employee shall be fully authorized to conduct all business with the subcontractors, to negotiate and execute all supplemental agreements, and to execute the orders or directions of the Engineer.

At all times that work is actually being performed, the Contractor shall have present on the project one competent individual who is authorized to act in a supervisory capacity over all work on the project, including work subcontracted. The individual who has been so authorized shall be experienced in the type of work being performed and shall be fully capable of managing, directing, and coordinating the work; of reading and thoroughly understanding the contract; and receiving and carrying out directions from the Engineer or his authorized representatives. He shall be an employee of the Contractor unless otherwise approved by the Engineer.

The Contractor may, at his option, designate one employee to meet the requirements of both positions. However, whenever the designated employee is absent from the work site, an authorized individual qualified to act in a supervisory capacity on the project shall be present.

CONTRACTOR PERSONNEL

The Department will not be responsible in any way to the Contractor's personnel for damages, destruction or loss, from any cause, to the Contractor's equipment, supplies, materials or tools or the personal property of the Contractor's personnel. The Contractor will be responsible for all repairs, regardless of cost, resulting from the negligence of the Contractor or Contractor's employees. The Department will not participate in the cost of such repairs.

INSPECTION

All work shall be subject to inspection by the Engineer at any time. Routinely, the Engineer will make periodic inspections of the completed work. It will be the responsibility of the Contractor to keep the Engineer informed of his proposed work plan and to submit written reports of work accomplished on a frequency to be determined by the Engineer.

MATERIALS AND TESTING

The Engineer reserves the right to perform all sampling and testing in accordance with Section 106 of the *Standard Specifications* and the Department's "Materials and Test Manual." However

the Engineer may reduce the frequency of sampling and testing where he deems it appropriate for the project under construction.

The Contractor shall furnish the applicable certifications and documentation for all materials as required by the *Standard Specifications*. Material that is not properly certified will not be accepted.

Delivery tickets for all asphalt material shall be furnished in accordance with Section 106-7 of the *Standard Specifications* and shall include the following information:

- NCDOT Work Order Number
- Date
- Time issued
- Type of Material
- Gross weight
- Tare Weight
- Net weight of material
- Plant Location
- Truck Number
- Contractor's name
- Public weigh-master's stamp or number
- Public weigh-master's signature or initials in ink
- NCDOT Job Mix Formula Number
- NCDOT Asphalt Plant Certification Number

COOPERATION BETWEEN CONTRACTORS

The Contractor's attention is directed to Article 105-7 of the *2012 Standard Specifications*.

The Contractor on this project shall cooperate with Contractor(s) and state forces working within or adjacent to the limits of this project to the extent that the work can be carried out to the best advantage of all concerned.

OUTSOURCING OUTSIDE THE USA

All work on consultant contracts, services contracts, and construction contracts shall be performed in the United States of America. No work shall be outsourced outside of the United States of America.

Outsourcing for the purpose of this provision is defined as the practice of subcontracting labor, work, services, staffing, or personnel to entities located outside of the United States.

The North Carolina Secretary of Transportation shall approve exceptions to this provision in writing.

PLAN, DETAIL AND QUANTITY ADJUSTMENTS

The Department reserves the right to make, at any time during the progress of the work, such alterations in plans or the details of construction as may be found necessary or desirable by the Engineer to complete the project.

POSTED WEIGHT LIMITS

The Contractor's attention is directed to the fact that many primary and secondary roads and bridges are posted with weight limits less than the legal limit. The Contractor will not be allowed to exceed the posted weight limits in transporting materials or equipment to the project. The Contractor should make a thorough examination of all maps and haul routes on this project.

UTILITY CONFLICTS

It shall be the responsibility of the Contractor to contact all affected utility owners and determine the precise locations of all utilities prior to beginning construction. Utility owners shall be contacted a minimum of 48 hours prior to the commencement of operations. Special care shall be used in working around or near existing utilities, protecting them when necessary to provide uninterrupted service. In the event that any utility service is interrupted, the Contractor shall notify the utility owner immediately and shall cooperate with the owner, or his representative, in the restoration of service in the shortest time possible. Existing fire hydrants shall be kept accessible to fire departments at all times.

The Contractor shall adhere to all applicable regulations and follow accepted safety procedures when working in the vicinity of utilities in order to insure the safety of construction personnel and the public.

GIFTS FROM VENDORS AND CONTRACTORS

By Executive Order 24, issued by Governor Perdue, and *N.C. G.S.§ 133-32,* it is unlawful for any vendor or contractor (i.e. architect, bidder, contractor, construction manager, design professional, engineer, landlord, offer or, seller, subcontractor, supplier, or vendor), to make gifts or to give favors to any State employee of the Governor's Cabinet Agencies (i.e. Administration, Commerce, Correction, Crime Control and Public Safety, Cultural Resources, Environment and Natural Resources, Health and Human Services, Juvenile Justice and Delinquency Prevention, Revenue, Transportation, and the Office of the Governor). This prohibition covers those vendors and contractors who:

(1) have a contract with a governmental agency; or
(2) have performed under such a contract within the past year; or
(3) anticipate bidding on such a contract in the future.

For additional information regarding the specific requirements and exemptions, vendors and contractors are encouraged to review Executive Order 24 and *G.S. § 133-32*.

Executive Order 24 also encouraged and invited other State Agencies to implement the requirements and prohibitions of the Executive Order to their agencies. Vendors and contractors should contact other State Agencies to determine if those agencies have adopted Executive Order 24.

Special Provisions

NOTES TO CONTRACTOR

1. Refer to the *Standard Specifications for Roads and Structures and Roadway Standard Drawings dated January 2012* and any Special Provisions in contract for guidelines on this project.

2. All work performed by the contractor shall be in compliance with the *2012 Standard Specifications* and Workmanship/Appearance done to the satisfaction of the Engineer.

3. All work items necessary to complete the work other than listed on the "Bid Proposal Form" will be considered incidental in nature and no further compensation will be made. Any work performed in an unsatisfactory manner could be basis for cancellation of the contract.

PRECONSTRUCTION CONFERENCE

Following the award of a contract and prior to beginning work, the Contractor shall contact **Ken Lisk of the Boone District Engineer's Office at 828-265-5380**, to arrange a Pre-construction conference. The project superintendent is required to attend the Pre-construction conference.

NOTIFICATION OF OPERATIONS

The Contractor or their appointed representative shall notify the Engineer one week in advance of beginning work on any site included in this contract. The Contractor shall give the Engineer sufficient notice of all operations for any sampling or acceptance testing required.

EMPLOYMENT

Revise the *2012 Standard Specifications* as follows:

Page 1-20, Subarticle 102-15(O), delete and replace with the following:

(O) Failure to restrict a former Department employee as prohibited by Article 108-5.

Page 1-65, Article 108-5 Character of Workmen, Methods, and Equipment, line 32, delete all of line 32, the first sentence of the second paragraph and the first word of the second sentence of the second paragraph.

HOURS OF WORK

The Contractor's operations are restricted to daylight hours. No work may be performed on Saturdays, Sundays, and Official State Holidays unless **approved by the Engineer**. Work shall only be performed when weather and visibility conditions allow safe operations.

CONTRACT BID QUANTITIES

The quantities shown in the itemized proposal for the project are considered to be approximate only and are given as the basis for comparison of bids. The Department of Transportation may increase or decrease the quantity of any item or portion of the work as may be deemed necessary or expedient.

An increase or decrease in the quantity of any item will not be regarded as sufficient ground for an increase or decrease in the unit prices, nor in the time allowed for the completion of the work, except as provided for the contract.

Contractor's pricing shall be based on the estimated quantities per Division. These estimated amounts are submitted to assist contractors in the bidding process. Estimated quantities are not to be regarded as actual requirements. The State shall not be obligated to purchase any specific quantity.

DRIVEWAYS AND PRIVATE PROPERTY

The Contractor shall maintain access to driveways for all residents and property owners throughout the life of the project.

The Contractor shall not perform work for private citizens or agencies in conjunction with this project or within the project limits of this contract.

PROOF ROLLING

Furnish and operate at the direction of the Engineer, a loaded tandem dump truck for testing the roadbed for stability and uniformity of compaction.

Provide equipment with the following features:

Tandem dump truck capable of hauling 15 tons.

After the roadbed has been completed to final grade, test the roadbed with 1 foot coverage, unless otherwise directed, with a tandem dump truck loaded with a minimum of 15 tons of Aggregate Base Course. Coverage is considered that stage in the rolling procedure when the entire width of the area being proof rolled has been in contact with the pneumatic tires of the dump truck. Operate the dump truck in a systematic manner so that the number of coverages over all areas to

be proof rolled can be readily determined and recorded. Operate the equipment at a speed between 225 and 300 feet per minute. Perform proof rolling only in the presence of the Engineer. Proof roll areas again following the completion of the necessary corrections. Perform proof rolling at no cost to the Department if the corrections are necessary due to the negligence of the Contractor or weather. Protect all structural facilities on the project, such as but not limited to bridges, box culverts, pipe culverts, and utilities, from damage by the proof rolling equipment. Protection may include unloading and reloading of the dump truck, detouring, protective earth pads, or other suitable measure to avoid damage.

No direct payment will be made for proof rolling as required herein, as the cost of the same will be considered incidental to the work being paid for under the item of *Comprehensive Grading*.

All subgrade must be proof rolled and accepted by the Engineer prior to placement of Aggregate Base Course. Any placement of Aggregate Base Course on subgrade not approved by the Engineer will be subject to removal and or nonpayment or both. Corrective work necessary, as determined by proof rolling, and not due to negligence of the Contractor or to weather, will be paid for at the applicable contract unit prices or as extra work, whichever may be applicable. Payment includes furnishing all labor, equipment, fuel, and ballast for loading, loading and unloading ballast as directed, and increasing and decreasing tire pressure as directed.

SHOULDER AND FILL SLOPE MATERIAL

Description

Perform the required shoulder and slope construction for this project in accordance with the applicable requirements of Section 560 and Section 235 of the *2012 Standard Specifications*.

Measurement and Payment

Where the material has been obtained from an authorized stockpile or from a borrow source and *Borrow Excavation* is not included in the contract, no direct payment will be made for this work, as the cost of this work will be part of the work being paid at the contract lump sum price for *Grading*. If *Borrow Excavation* is included in this contract and the material has been obtained from an authorized stockpile or from a borrow source, measurement and payment will be as provided in Section 230 of the *2012 Standard Specifications* for *Borrow Excavation*.

AGGREGATE PRODUCTION

Provide aggregate from a producer who uses the current Aggregate Quality Control/Quality Assurance Program, which is in effect at the time of shipment.

No price adjustment is allowed to contractors or producers who use the program. Participation in the program does not relieve the producer of the responsibility of complying with all requirements of the *Standard Specifications*. Copies of this procedure are available upon request from the Materials and Test Unit.

INCIDENTAL STONE BASE

Description

Place incidental stone base on driveways, mailboxes, etc. only with permission of the Engineer. **Any incidental stone base required for this project shall be placed only after approval has been granted.**

Materials and Construction

Provide and place incidental stone base in accordance with the requirements of Section 545 of the *2012 Standard Specifications*.

Measurement and Payment

Incidental Stone Base will be measured and paid for in accordance with Article 545-6 of the *2012 Standard Specifications.*

BORROW AND WASTE SITE RECLAMATION PROCEDURES

The Department's Borrow and Waste Site Reclamation Procedures for Contracted Projects have been revised and are available on the website at:

http://www.ncdot.org/doh/operations/dp_chief_eng/roadside/fieldops/downloads/

In accordance with Article 230-4 and Section 802 of the *2012 Standard Specifications*, the Contractor shall utilize these revised procedures for all borrow and waste sites on this project.

AGGREGATE GRADATION FOR COARSE AGGREGATE

Revise the *2012 Standard Specifications* as follows:

Page 10-23, Table 1005-1, AGGREGATE GRADATION-COARSE AGGREGATE, replace with the following:

TABLE 1005-1
AGGREGATE GRADATION - COARSE AGGREGATE

	Percentage of Total by Weight Passing												
Std. Size #	**2"**	**1 1/2"**	**1"**	**3/4"**	**1/2"**	**3/8"**	**#4**	**#8**	**#10**	**#16**	**#40**	**#200**	**Remarks**
4	100	90-100	20-55	0-15	-	0-5	-	-	-	-	-	**A**	Asphalt Plant Mix
467M	100	95-100	-	35-70	-	0-30	0-5	-	-	-	-	**A**	Asphalt Plant Mix
5	-	100	90-100	20-55	0-10	0-5	-	-	-	-	-	**A**	AST, Sediment Control Stone
57	-	100	95-100	-	25-60	-	0-10	0-5	-	-	-	**A**	AST, Str. Concrete, Shoulder Drain, Sediment Control Stone
57M	-	100	95-100	-	25-45	-	0-10	0-5	-	-	-	**A**	AST, Concrete Pavement
6M	-	-	100	90-100	20-55	0-20	0-8	-	-	-	-	**A**	AST
67	-	-	100	90-100	-	20-55	0-10	0-5	-	-	-	**A**	AST, Str. Concrete, Asphalt Plant Mix
78M	-	-	-	100	98-100	75-100	20-45	0-15	-	-	-	**A**	Asphalt Plant Mix, AST, Str. Conc, Weep Hole Drains
14M	-	-	-	-	-	100	35-70	5-20	-	0-8	-	**A**	Asphalt Plant Mix, AST, Weep Hole Drains, Str. Concrete
9	-	-	-	-	-	100	85-100	10-40	-	0-10	-	**A**	AST
ABC	-	100	75-97	-	55-80	-	35-55	-	25-45	-	14-30	4-12[B]	Aggregate Base Course, Aggregate Stabilization
ABC (M)	-	100	75-100	-	45-79	-	20-40	-	0-25	-	-	0-12[B]	Maintenance Stabilization
Light-weight[C]	-	-	-	-	100	80-100	5-40	0-20	-	0-10	-	0-2.5	AST

A. See Subarticle 1005-4(A).
B. See Subarticle 1005-4(B).
C. For Lightweight Aggregate used in Structural Concrete, see Subarticle 1014-2(E)(6).

TRAFFIC CONTROL

Maintain traffic in accordance with Divisions 10, 11 and 12 of the *Standard Specifications*, the latest revisions thereto and the following provisions:

Use a lane closure (refer to the *Roadway Standard Drawings* Nos. 1101.02, 1101.11, 1110.02, 1130.01 and details for the Advance Work Zone signing in contract) or a slow-moving operation as shown in details of this contract. Use a moving operation only if the minimum speed maintained at all times is 3 mph with no stops that narrow or close a lane of travel. If the moving operation is progressing slower than 3 mph at any time, install a lane closure. Maintain the existing traffic pattern at all times, except in the immediate work zone where lane closures are allowed as determined by the Engineer.

Refer to Attached Details and the *Roadway Standard Drawings* Nos. 1101.02, 1101.03, 1101.04, 1101.05, 1101.11, 1110.01, 1110.02, 1115.01, 1130.01, 1135.01, 1145.01, 1150.01, 1165.01, 1170.01 and 1180.01 when closing a lane of travel in a stationary work zone such as pavement patching resurfacing, or pavement marking removal. Properly ballasted cones may be used instead of drums for lane closures during daylight hours. However, drums are required for the upstream taper portion of lane closures in all applications. The stationary work zone shall be a maximum of 3 miles in length at any given time unless otherwise directed by the Engineer. A pilot vehicle operation may be used in conjunction with flaggers and the appropriate pilot vehicle warning signing as directed by the Engineer. During periods of construction inactivity, return the traffic pattern to the existing alignment and remove or cover any work zone signs. When covering work zone signs, use an opaque material that prevents reading of the sign at night by a driver using high beam headlights. Use material, which does not damage the sign sheeting. Replace any obliterated markings as required by other sections of the *Standard Specifications* and the Engineer.

When personnel and/or equipment are working on the shoulder adjacent to an undivided facility and within 5 feet of an open travel lane, close the nearest open travel lane using the *Roadway Standard Drawings* No. 1101.02 unless the work area is protected by barrier or guardrail. When personnel and/or equipment are working on the shoulder, adjacent to a divided facility and within 10 feet of an open travel lane, close the nearest open travel lane using the *Roadway Standard Drawings* No. 1101.02 unless the work area is protected by barrier or guardrail. When personnel and/or equipment are working within a lane of travel of an undivided or divided facility, close the lane according to the traffic control plans, *Roadway Standard Drawings* or as directed by the Engineer. Conduct the work so that all personnel and/or equipment remain within the closed travel lane. Do not work simultaneously, on both sides of an open travel way, within the same location, on a two-lane, two-way road. Do not perform work involving heavy equipment within 15 feet of the edge of travel way when work is being performed behind a lane closure on the opposite side of the travel way. Perform work only when weather and visibility conditions allow safe operations as directed by the Engineer.

Do not exceed a difference of 2 inches in elevation between open lanes of traffic for nominal lifts of 1.5 inches. Install advance warning UNEVEN LANES signs (W8-11 at 48” X 48”) 500 feet in advance and a minimum of once every half mile throughout the uneven area.

Backfill at a 6:1 slope up to the edge and elevation of existing pavement in areas adjacent to an open travel lane that has an edge of pavement drop-off as follows:
(A) Drop-off that exceeds 2 inches on roadways with posted speed limits of 45 mph or greater
(B) Drop-off that exceeds 3 inches on roadways with posted speed limit less than 45 mph.
Backfill the unacceptable drop-off with suitable compacted material, as approved by the Engineer, at no expense to the Department. This work is not considered part of shoulder reconstruction.

When utilizing a slow-moving operation for such items as pavement marking placement, pavement marker installation and pesticide spraying, the slow moving operation caravan shall consist, as a minimum, of the vehicles and devices shown on the Moving Operation Caravan Detail(s) herein. Traffic cones may be used when necessary to provide additional protection of wet pavement markings. Ballast all traffic cones so they will not be blown over by traffic.

Maintain vehicular access in accordance with Section 1101-13 of the *Standard Specifications* using suitable backfill material approved by the Engineer.

Operate equipment and conduct operations in the same direction as the flow of traffic. Do not cross medians with equipment, except at properly designated interchanges.

No direct payment will be made for the signing and traffic control items including Truck Mounted Impact Attenuators (TMIA - see Section 1165 of the *Standard Specifications* and the *Roadway Standard Drawings*). This work will be considered incidental to the various other bid items in the contract.

WORK ZONE SIGNING

Description

Install and maintain signing in accordance with Divisions 11 and 12 of the *Standard Specifications*, the *Roadway Standard Drawings* and the following provisions:

Furnish, install, maintain, and remove advance warning work zone signs and any required lane closure signing.

Furnish, install, and maintain general work zone warning signs for resurfacing and milling such as ROUGH ROAD (W8-8 at 48" X 48") (for milling only), UNEVEN LANES (W8-11 at 48" X 48"), LOW SHOULDER (W8-9 at 48" X 48"), LOW / SOFT SHOULDER (DOT No. 16-79860 at 48” X 48”), UNMARKED PAVEMENT AHEAD (DOT No. 116087130 at 48" X 48") and DO NOT PASS (R4-1 at 24" X 30"). When construction is completed in any area of the project, relocate signs to the next work site, as directed by the Engineer. Remove these signs at the completion of the project.

All work zone signs may be portable.

Construction Methods

(A) General

Install all warning work zone signs before beginning work on a particular map. If signs are installed three days prior to the beginning of work on a particular map, cover the signs until the work begins. Install each work zone warning sign separately and not on the same post or stand with any other sign except where an advisory speed plate or directional arrow is used.

(B) Advance Warning Work Zone Signs

Install advance warning work zone signs (see attached Details and the *Roadway Standard Drawings* Nos. 1101.02 and 1110.01 and advance signing details) prior to beginning of work and remove upon final completion of the project. If there is a period of construction inactivity longer than two weeks, remove or cover advance warning work zone signs. Uncover advance warning work zone signs no more than 3 days before work resumes. All other operations could be suspended upon failure to comply with the above requirements. Such suspended operations would not be resumed until the above requirements are fulfilled.

(C) Lane Closure Work Zone Signs

Install any required lane closure signing needed during the life of the project in accordance with the *Roadway Standard Drawings* Nos. 1101.02, 1101.11 and 1110.02.

(D) General Work Zone Warning Signs

Install general work zone warning signs for resurfacing and milling such as ROUGH ROAD (W8-8 at 48" X 48") (for milling only), UNEVEN LANES (W8-11 at 48" X 48"), LOW SHOULDER (W8-9 at 48" X 48") and LOW / SOFT SHOULDER (W8-9B at 48” X 48”) at 1 mile intervals starting at a minimum of 500 feet in advance of the condition for both directions of travel (undivided roadways only) and at any other points determined by the Engineer.

Install the LOW SHOULDER (W8-9 at 48" X 48") or LOW / SOFT SHOULDER (DOT No. 16-79860 at 48” X 48”) signs prior to any resurfacing in an area where shoulder construction will be performed.

Install general work zone warning signs such as UNMARKED PAVEMENT AHEAD (DOT No. 116087130 at 48" X 48") and DO NOT PASS (R4-1 at 24" X 30") alternately at 1/2 mile intervals starting at a minimum of 500 feet in advance of the condition for both directions of travel (undivided roadways only) and at any other points determined by the Engineer. Install signs prior to the obliteration of any pavement markings.

Measurement and Payment

No direct payment will be made for *Work Zone Signing* as such work will be considered incidental to the various other bid items in the contract.

EROSION AND SEDIMENT CONTROL/STORMWATER CERTIFICATION

General

Schedule and conduct construction activities in a manner that will minimize soil erosion and the resulting sedimentation and turbidity of surface waters. Comply with the requirements herein regardless of whether or not a National Pollution discharge Elimination System (NPDES) permit for the work is required.

Establish a chain of responsibility for operations and subcontractors' operations to ensure that the *Erosion and Sediment Control/Stormwater Pollution Prevention Plan* is implemented and maintained over the life of the contract.

(A) *Certified Supervisor* - Provide a certified Erosion and Sediment Control/Stormwater Supervisor to manage the Contractor and subcontractor operations, insure compliance with Federal, State and Local ordinances and regulations, and manage the Quality Control Program.

(B) *Certified Foreman* - Provide a certified, trained foreman for each construction operation that increases the potential for soil erosion or the possible sedimentation and turbidity of surface waters.

(C) *Certified Installer* - Provide a certified installer to install or direct the installation for erosion or sediment/stormwater control practices.

(D) *Certified Designer* - Provide a certified designer for the design of the erosion and sediment control/stormwater component of reclamation plans and, if applicable, for the design of the project erosion and sediment control/stormwater plan.

Roles and Responsibilities

(A) *Certified Erosion and Sediment Control/Stormwater Supervisor* - The Certified Supervisor shall be Level II and responsible for ensuring the erosion and sediment control/stormwater plan is adequately implemented and maintained on the project and for conducting the quality control program. The Certified Supervisor shall be on the project within 24 hours notice from initial exposure of an erodible surface to the project's final acceptance. Perform the following duties:

(1) Manage Operations - Coordinate and schedule the work of subcontractors so that erosion and sediment control/stormwater measures are fully executed for each operation and in a timely manner over the duration of the contract.

(a) Oversee the work of subcontractors so that appropriate erosion and sediment control/stormwater preventive measures are conformed to at each stage of the work.

(b) Prepare the required National Pollutant Discharge Elimination System (NPDES) Inspection Record and submit to the Engineer.

(c) Attend all weekly or monthly construction meetings to discuss the findings of the NPDES inspection and other related issues.

(d) Implement the erosion and sediment control/stormwater site plans requested.

(e) Provide any needed erosion and sediment control/stormwater practices for the Contractor's temporary work not shown on the plans, such as, but not limited to work platforms, temporary construction, pumping operations, plant and storage yards, and cofferdams.

(f) Acquire applicable permits and comply with requirements for borrow pits, dewatering, and any temporary work conducted by the Contractor in jurisdictional areas.

(g) Conduct all erosion and sediment control/stormwater work in a timely and workmanlike manner.

(h) Fully perform and install erosion and sediment control/stormwater work prior to any suspension of the work.

(i) Coordinate with Department, Federal, State and Local Regulatory agencies on resolution of erosion and sediment control/stormwater issues due to the Contractor's operations.

(j) Ensure that proper cleanup occurs from vehicle tracking on paved surfaces or any location where sediment leaves the Right-of-Way.

(k) Have available a set of erosion and sediment control/stormwater plans that are initialed and include the installation date of Best Management Practices. These practices shall include temporary and permanent groundcover and be properly updated to reflect necessary plan and field changes for use and review by Department personnel as well as regulatory agencies.

(2) Requirements set forth under the NPDES Permit - The Department's NPDES Stormwater permit (NCS000250) outlines certain objectives and management measures pertaining to construction activities. The permit references *NCG010000, General Permit to Discharge Stormwater* under the NPDES, and states that the Department shall incorporate the applicable requirements into its delegated Erosion and Sediment Control Program for construction activities disturbing one or more acres of land. The Department further incorporates these requirements on all contracted bridge and culvert work at jurisdictional waters, regardless of size. Some of the requirements are, but are not limited to:

(a) Control project site waste to prevent contamination of surface or ground waters of the state, i.e. from equipment operation/maintenance, construction materials, concrete washout, chemicals, litter, fuels, lubricants, coolants, hydraulic fluids, any other petroleum products, and sanitary waste.

(b) Inspect erosion and sediment control/stormwater devices and stormwater discharge outfalls at least once every 7 calendar days, twice weekly for construction related *Federal Clean Water Act, Section 303(d)* impaired streams with turbidity violations, and within 24 hours after a significant rainfall event of 0.5 inch that occurs within a 24 hour period.

(c) Maintain an onsite rain gauge or use the Department's Multi-Sensor Precipitation Estimate website to maintain a daily record of rainfall amounts and dates.

(d) Maintain erosion and sediment control/stormwater inspection records for review by Department and Regulatory personnel upon request.

(e) Implement approved reclamation plans on all borrow pits, waste sites and staging areas.

(f) Maintain a log of turbidity test results as outlined in the Department's Procedure for Monitoring Borrow Pit Discharge.

(g) Provide secondary containment for bulk storage of liquid materials.

(h) Provide training for employees concerning general erosion and sediment control/stormwater awareness, the Department's NPDES Stormwater Permit NCS000250 requirements, and the applicable requirements of the *General Permit, NCG010000*.

(i) Report violations of the NPDES permit to the Engineer immediately who will notify the Division of Water Quality Regional Office within 24 hours of becoming aware of the violation.

(3) Quality Control Program - Maintain a quality control program to control erosion, prevent sedimentation and follow provisions/conditions of permits. The quality control program shall:

(a) Follow permit requirements related to the Contractor and subcontractors' construction activities.

(b) Ensure that all operators and subcontractors on site have the proper erosion and sediment control/stormwater certification.

(c) Notify the Engineer when the required certified erosion and sediment control/stormwater personnel are not available on the job site when needed.

(d) Conduct the inspections required by the NPDES permit.

(e) Take corrective actions in the proper timeframe as required by the NPDES permit for problem areas identified during the NPDES inspections.

(f) Incorporate erosion control into the work in a timely manner and stabilize disturbed areas with mulch/seed or vegetative cover on a section-by-section basis.

(g) Use flocculants approved by state regulatory authorities where appropriate and where required for turbidity and sedimentation reduction.

(h) Ensure proper installation and maintenance of temporary erosion and sediment control devices.

(i) Remove temporary erosion or sediment control devices when they are no longer necessary as agreed upon by the Engineer.

(j) The Contractor's quality control and inspection procedures shall be subject to review by the Engineer. Maintain NPDES inspection records and make records available at all times for verification by the Engineer.

(B) *Certified Foreman* - At least one Certified Foreman shall be onsite for each type of work listed herein during the respective construction activities to control erosion, prevent sedimentation and follow permit provisions:

(1) Foreman in charge of grading activities
(2) Foreman in charge of bridge or culvert construction over jurisdictional areas
(3) Foreman in charge of utility activities

The Contractor may request to use the same person as the Level II Supervisor and Level II Foreman. This person shall be onsite whenever construction activities as described above are taking place. This request shall be approved by the Engineer prior to work beginning.

The Contractor may request to name a single Level II Foreman to oversee multiple construction activities on small bridge or culvert replacement projects. This request shall be approved by the Engineer prior to work beginning.

(C) *Certified Installers* - Provide at least one onsite, Level I Certified Installer for each of the following erosion and sediment control/stormwater crew:

(1) Seeding and Mulching
(2) Temporary Seeding
(3) Temporary Mulching
(4) Sodding
(5) Silt fence or other perimeter erosion/sediment control device installations
(6) Erosion control blanket installation
(7) Hydraulic tackifier installation
(8) Turbidity curtain installation
(9) Rock ditch check/sediment dam installation
(10) Ditch liner/matting installation
(11) Inlet protection
(12) Riprap placement
(13) Stormwater BMP installations (such as but not limited to level spreaders, retention/detention devices)
(14) Pipe installations within jurisdictional areas

If a Level I *Certified Installer* is not onsite, the Contractor may substitute a Level II Foreman for a Level I Installer, provided the Level II Foreman is not tasked to another crew requiring Level II Foreman oversight.

(D) *Certified Designer* - Include the certification number of the Level III-B Certified Designer on the erosion and sediment control/stormwater component of all reclamation plans and if applicable, the certification number of the Level III-A Certified Designer on the design of the project erosion and sediment control/stormwater plan.

Preconstruction Meeting

Furnish the names of the *Certified Erosion and Sediment Control/Stormwater Supervisor, Certified Foremen, Certified Installers* and *Certified Designer* and notify the Engineer of changes in certified personnel over the life of the contract within 2 days of change.

Ethical Responsibility

Any company performing work for the North Carolina Department of Transportation has the ethical responsibility to fully disclose any reprimand or dismissal of an employee resulting from improper testing or falsification of records.

Revocation or Suspension of Certification

Upon recommendation of the Chief Engineer - Operations to the certification entity, certification for *Supervisor, Certified Foremen, Certified Installers* and *Certified Designer* may be revoked or suspended with the issuance of an *Immediate Corrective Action (ICA), Notice of Violation (NOV),* or C*ease and Desist Order* for erosion and sediment control/stormwater related issues.

The Chief Engineer may recommend suspension or permanent revocation of certification due to the following:

(A) Failure to adequately perform the duties as defined within this certification provision.
(B) Issuance of an ICA, NOV, or Cease and Desist Order.
(C) Failure to fully perform environmental commitments as detailed within the permit conditions and specifications.
(D) Demonstration of erroneous documentation or reporting techniques.
(E) Cheating or copying another candidate's work on an examination.
(F) Intentional falsification of records.
(G) Directing a subordinate under direct or indirect supervision to perform any of the above actions.
(H) Dismissal from a company for any of the above reasons.
(I) Suspension or revocation of one's certification by another entity.

Suspension or revocation of a certification will be sent by certified mail to the certificant and the Corporate Head of the company that employs the certificant.

A certificant has the right to appeal any adverse action which results in suspension or permanent revocation of certification by responding, in writing, to the Chief Engineer within 10 calendar days after receiving notice of the proposed adverse action.

Chief Engineer - Operations
1537 Mail Service Center
Raleigh, NC 27699-1537

Failure to appeal within 10 calendar days will result in the proposed adverse action becoming effective on the date specified on the certified notice. Failure to appeal within the time specified will result in a waiver of all future appeal rights regarding the adverse action taken. The certificant will not be allowed to perform duties associated with the certification during the appeal process.

The Chief Engineer will hear the appeal and make a decision within 7 days of hearing the appeal. Decision of the Chief Engineer will be final and will be made in writing to the certificant.

If a certification is temporarily suspended, the certificant shall pass any applicable written examination and any proficiency examination, at the conclusion of the specified suspension period, prior to having the certification reinstated.

Measurement and Payment

Certified Erosion and Sediment Control/Stormwater Supervisor, Certified Foremen, Certified Installers and *Certified Designer* will be incidental to the project for which no direct compensation will be made.

INFILTRATION BASIN WITH BAFFLES

Description

Provide an infiltration basin to remove sediment from construction site runoff at locations shown in the erosion control plans. See the Infiltration Basin with Baffles Detail sheet provided in the erosion control plans. Work includes constructing sediment basin, installation of coir fiber baffles, providing and placing geotextile emergency spillway liner, providing coir fiber mat stabilization for the emergency spillway outlet, disposing of excess materials, removing geotextile liner and coir fiber mat, backfilling basin area with suitable material and providing proper drainage when basin area is abandoned.

Materials

Item	Section
Geotextile for Soil Stabilization, Type 4	1056
Staples	1060-8
Coir Fiber Mat	1060-14
Coir Fiber Baffle	1640

Anchors: Staples, stakes, or reinforcement bars shall be used as anchors.

Wooden Stakes:

Provide hardwood stakes 12"- 24" long with a 2" x 2" nominal square cross section. One end of the stake must be sharpened or beveled to facilitate driving through the coir fiber mat and down

into the underlying soil. The other end of the stake needs to have a 1"- 2" long head at the top with a 1"- 2" notch following to catch and secure the coir fiber mat.

Steel Reinforcement Bars:

Provide uncoated #10 steel reinforcement bars 24" nominal length. The bars shall have a 4" diameter bend at one end with a 4" straight section at the tip to catch and secure the coir fiber mat.

Staples:

Provide staples made of 0.125" diameter new steel wire formed into a *u* shape not less than 12" in length with a throat of 1" in width.

Construction Methods

Excavate basin according to the erosion control plans with basin surface free of obstructions, debris, and pockets of low-density material. Excavation into or below the water table shall not occur, and avoid compacting the bottom of the basin with equipment tires, excavation bucket, etc. Construct the coir fiber baffles according to *Roadway Standard Drawings* No. 1640.01 and Section 1640 of the *Standard Specifications*. Construct earth berm around perimeter of infiltration basin as shown in the detail and the earth berm height shall be limited to 3 ft.

Construct the emergency spillway according to the Infiltration Basin with Baffles Detail sheet in the erosion control plans. Line emergency spillway with geotextile unrolled in the direction of flow and lay smoothly but loosely on soil surface without creases. Bury edges of geotextile in a trench at least 5" deep and tamp firmly. Make vertical overlaps a minimum of 18" with upstream geotextile overlapping the downstream geotextile. Secure geotextile with eleven gauge wire staples shaped into a *u* shape with a length of not less than 12" and a throat not less than 1" in width. Place staples along outer edges and throughout the geotextile a maximum of 3 ft. horizontally and vertically. Geotextile shall be placed to the bottom and across the entire width of the basin according to the Infiltration Basin with Baffles detail.

At the emergency spillway outlet, provide a smooth soil surface free from stones, clods, or debris that will prevent contact of the coir fiber matting with the soil. Unroll the matting and apply without stretching such that it will lie smoothly but loosely on the soil surface. Wooden stakes, reinforcement bars, or staples may be used as anchors in accordance with the details in the plans and as directed. Place anchors across the matting at the ends approximately 1 ft. apart. Place anchors along the outer edges and down the center of the matting 3 ft. apart.

Measurement and Payment

Silt Excavation will be measured and paid for in accordance with Article 1630-4 of the *Standard Specifications*, as calculated from the typical section throughout the length of the basin as shown on the final approved plans.

Geotextile for Soil Stabilization will be measured and paid for in accordance with Article 270-4 of the *Standard Specifications*.

Coir Fiber Baffles will be measured and paid for in accordance with Article 1640-4 of the *Standard Specifications*.

Coir Fiber Mat will be measured and paid for as the actual number of square yards measured along the surface of the ground over which coir fiber mat is installed and accepted.

No measurement will be made for other items or for over excavation or stockpiling.

Payment will be made under:

Pay Item	**Pay Unit**
Silt Excavation	Cubic Yard
Geotextile for Soil Stabilization	Square Yard
Coir Fiber Baffles	Linear Foot
Coir Fiber Mat	Square Yard

COIR FIBER MAT

Description

Furnish material, install and maintain coir fiber mat in locations shown on the plans or in locations as directed. Work includes providing all materials, excavating and backfilling, and placing and securing coir fiber mat with stakes, steel reinforcement bars or staples as directed.

Materials

Item	**Section**
Coir Fiber Mat	1060-14

Anchors: Stakes, reinforcement bars, or staples shall be used as anchors.

Wooden Stakes:

Provide hardwood stakes 12"- 24" long with a 2" x 2" nominal square cross section. One end of the stake must be sharpened or beveled to facilitate driving through the coir fiber mat and down into the underlying soil. The other end of the stake needs to have a 1"- 2" long head at the top with a 1"- 2" notch following to catch and secure the coir fiber mat.

Steel Reinforcement Bars:

Provide uncoated #10 steel reinforcement bars 24" nominal length. The bars shall have a 4" diameter bend at one end with a 4" straight section at the tip to catch and secure the coir fiber mat.

Staples:

Provide staples made of 0.125" diameter new steel wire formed into a *u* shape not less than 12" in length with a throat of 1" in width.

Construction Methods

Place the coir fiber mat immediately upon final grading. Provide a smooth soil surface free from stones, clods, or debris that will prevent the contact of the mat with the soil. Unroll the mat and apply without stretching such that it will lie smoothly but loosely on the soil surface.

For stream relocation applications, take care to preserve the required line, grade, and cross section of the area covered. Bury the top slope end of each piece of mat in a narrow trench at least 6 in. deep and tamp firmly. Where one roll of matting ends and a second roll begins, overlap the end of the upper roll over the buried end of the second roll so there is a 6 in. overlap. Construct check trenches at least 12 in. deep every 50 ft. longitudinally along the edges of the mat or as directed. Fold over and bury mat to the full depth of the trench, close and tamp firmly. Overlap mat at least 6 in. where 2 or more widths of mat are installed side by side.

Place anchors across the mat at the ends approximately 1 ft. apart. Place anchors along the outer edges and down the center of the mat 3 ft. apart.

Adjustments in the trenching or anchoring requirements to fit individual site conditions may be required.

Measurement and Payment

Coir Fiber Mat will be measured and paid for as the actual number of square yards measured along the surface of the ground over which coir fiber mat is installed and accepted.

No measurement will be made for anchor items.

Payment will be made under:

Pay Item	**Pay Unit**
Coir Fiber Mat	Square Yard

WATTLES WITH POLYACRYLAMIDE (PAM)

Description

Wattles are tubular products consisting of excelsior fibers encased in polyethylene netting. Wattles are used on slopes or channels to intercept runoff and act as a velocity break. Wattles are to be placed at locations shown on the plans or as directed. Installation shall follow the detail provided

in the plans and as directed. Work includes furnishing materials, installation of wattles, matting installation, PAM application, and removing wattles.

Materials

Wattle shall meet the following specifications:
100% Curled Wood(Excelsior) Fibers
Minimum Diameter 18 in.
Minimum Density 2.6 lb/ft^3 +/- 10%
Net Material Polyethylene
Net Openings 1 in. x 1 in.
Net Configuration Totally Encased
Minimum Weight 20 lb. +/- 10% per 10 ft. length
Anchors: Stakes shall be used as anchors.
Wooden Stakes: Provide hardwood stakes a minimum of 2-ft. long with a 2 in. x 2 in. nominal square cross section. One end of the stake must be sharpened or beveled to facilitate driving down into the underlying soil.
Matting shall meet the requirements of section 1060-8 of the *Standard Specifications*, or shall meet specifications provided elsewhere in this contract.
Provide staples made of 0.125" diameter new steel wire formed into a *u* shape not less than 12" in length with a throat of 1" in width.
Polyacrylamide (PAM) shall be applied in powder form and shall be anionic or neutrally charged. Soil samples shall be obtained in areas where the wattles will be placed and analyzed for the appropriate PAM flocculant to be utilized with each wattle.

Construction Methods

Wattles shall be secured to the soil by wire staples approximately every 1 linear foot and at the end of each section of wattle. A minimum of 4 stakes shall be installed on the downstream side of the wattle with a maximum spacing of 2 linear feet along the wattle, and according to the detail. Install a minimum of 2 stakes on the upstream side of the wattle according to the detail provided in the plans. Stakes shall be driven into the ground a minimum of 10 in. with no more than 2 in. projecting from the top of the wattle. Drive stakes at an angle according to the detail provided in the plans. Install wattles to the top of the ditch according to the detail provided in the plans. Overlap adjoining sections of wattles a minimum of 6 in. Installation of matting shall be in accordance with the detail provided in the plans, and in accordance with section 1631-3 of the *Standard Specifications*, or in accordance with specifications provided elsewhere in this contract. Apply PAM over the lower center portion of the wattle where the water is going to flow over at a rate of 3.5 ounces per wattle. PAM applications shall be done during construction activities after every rainfall event that is equal to or exceeds 0.25 in.

The Contractor shall maintain the wattles until the project is accepted or until the wattles are removed, and shall remove and dispose of silt accumulations at the wattles when so directed in accordance with the requirements of Section 1630 of the *Standard Specifications*.

Measurement and Payment
Wattles will be measured and paid for by the actual number of linear feet of wattles which are installed and accepted. Such price and payment will be full compensation for all work covered by this section, including, but not limited to, furnishing all materials, labor, equipment and incidentals necessary to install the *Wattles*.

Matting will be measured and paid for in accordance with section 1631-4 of the *Standard Specifications*, or in accordance with specifications provided elsewhere in this contract.

Polyacrylamide(PAM) will be measured and paid for by the actual weight in pounds of PAM applied to the wattles. Such price and payment will be full compensation for all work covered by this section, including, but not limited to, furnishing all materials, labor, equipment and incidentals necessary to apply the *Polyacrylamide(PAM)*.

Payment will be made under:

Pay Item	**Pay Unit**
Polyacrylamide(PAM)	Pound
Wattle	Linear Foot

EROSION, SILTATION, AND POLLUTION CONTROL

The Contractor shall exercise every reasonable precaution and take all necessary measures throughout the life of the project to prevent erosion, siltation, and pollution in accordance with Section 107-12 of the *Standard Specifications*. Silt fence and erosion control measures shall be installed in accordance with the Section 1605 of the *Standard Specifications*, and in locations directed by the Engineer or his representative.

ENVIRONMENTAL STEWARDSHIP AND PERFORMANCE OF EROSION CONTROL

The Contractor shall perform all aspects of his / her work related to the project in a manner that is considerate of the environment and is representative of the Department's commitment to environmental stewardship. The Contractor shall take initiative to adhere to the erosion control plans and all provisions stated in the related permits. The Contractor shall provide additional measures above and beyond the plans and provisions when required to protect the environment. The Contractor shall also comply with all other general requirements of the regulatory agencies. These include but are not limited to the US Army Corps of Engineers, NC Wildlife Resources Commission (comments included in the Corps permit), NC Department of Environment and Natural Resources – Land Quality Section, NC Department of Environment and Natural Resources – Water Quality Section, etc. <u>It is the responsibility of the Contractor to be familiar and to comply with the contract permit provisions, erosion control plan, general requirements of the agencies, and all laws pertaining to land disturbing activities.</u>

Erosion Control Devices shall be installed and maintained in a timely manner throughout the life of the project. Such devices shall be constructed and maintained by the end of each workday.

Modifications to the Erosion Control Plan shall be approved by the Engineer or his representative. Prior to grubbing and / or grade-work, erosion control devices shall be installed to prevent any loss of sedimentation into streams or outside the perimeter of the project. Inlet and outlet protection for pipes shall be constructed as part of the pipe installation in a continuous manner. Erosion control devices should not be placed in the stream itself.

In the event the Contractor does not comply with the erosion control plan and environmental conditions of the contract, a **monetary penalty of $1,000.00 per day** shall be imposed until the corrective action is taken in order to meet the requirements. This penalty shall pertain to any permit condition and erosion control measure that is not installed and maintained in accordance with the erosion control plan, permit conditions, project special provisions, *Standard Specifications,* and directions provided by the Engineer or his/her representative. Disregard for the environment by the Contractor shall also subject the Contractor to such penalties.

In the event that a Notice of Violation is issued for the project by NCDENR, the Contractor shall be **assessed a single amount of $5,000.00.** If additional Violations are issued on the same project, a **monetary penalty of $10,000.00 per occurrence** will be imposed on the Contractor. Subsequent to the issuance of a NOV, the Contractor shall work in a continuous manner to comply with the required corrective action by the deadline given by the issuing agency. If the corrective actions are not completed by the required date of compliance, the Department shall impose an additional **monetary penalty of $1,000.00 per day**. All penalties stated above shall also apply to the issuance of an **Immediate Corrective Action (ICA)** by the Department.

All penalties described above shall be deducted from monies due to the Contractor. The Contractor shall also comply with Article 107-12 and Division 16 of the *Standard Specifications.*

ENVIRONMENTAL NOTES TO CONTRACTOR

1. Environmental stewardship and timely performance of erosion control shall be expected of the Contractor on this project.
2. The Contractor may be subject to fines imposed by the Department for violations and / or non-compliance related to environmental permits and erosion control issues (see special provisions).
3. Pipe installation shall include immediate protection of the inlet and outlet with appropriate erosion control measures as part of the pipe installation process by the end of each day.
4. Installation of all pipe(s) shall be completed in a continuous manner.
5. Vegetation shall not be disturbed beyond the limits of construction without approval by the Engineer.
6. Any ground disturbance beyond areas protected by installed erosion control devices shall be protected immediately – no exceptions. This may require hand seeding and mulching in some cases.
7. Temporary erosion control measures to protect areas of work shall be installed by end of each day, regardless the construction stage of a particular operation.
8. Erosion control measures installed after the fact is not acceptable practice.
9. Ditches that are not to final grade shall have the necessary temporary erosion control measures installed by the end of the day, including any basins and rock checks.

10. Filter stone and Class B Rip Rap for erosion control shall be installed at any location where runoff leaves the project. Class B Rip Rap only is not acceptable.
11. Blasting shall be controlled with appropriate measures to prevent fly rock and loss of material into rivers and streams and outside the limits of construction. Blasting mats will be required. Blasting shall not take place without the presence of an Inspector. The Contractor shall provide a 24-hour notice prior to blasting in a particular area. The Contractor shall be responsible for any and all damages that may occur from blasting, including any fines. The Contractor shall consider and implement when feasible alternative methods to blasting around environmentally sensitive areas.
12. No disturbed area shall be left unprotected from sediment runoff by the end of each day.
13. Grubbing shall not take place in an area until immediately before grading operations are to commence in that particular area.
14. The Contractor is responsible for being familiar with the conditions of the environmental permits.
15. The Contractor must comply with all provisions of the contract, standard specifications and drawings, and best management practices for bridge demolition and erosion control.
16. The presence of the Engineer or Inspector shall in no way lessen the Contractor's responsibility for compliance with the permits, conformity with erosion control, and protection of the environment. Should the Engineer or Inspector fail to point out work that is not in compliance for any reason, it shall in no way prevent later rejection or correction to the unsatisfactory materials or work when discovered.

RESPONSE FOR EROSION CONTROL

The Contractor shall respond in a timely manner for the installation and maintenance of Erosion Control Devices.

Erosion Control Measures shall be installed prior to ground disturbing activities in such a manner to prevent runoff and offsite sedimentation. Failure to install measures according to the erosion control plan and failure to install additional measures when grading operations deems necessary shall be considered a violation of the Environmental Stewardship and Performance of Erosion Control Special Provision. All disturbed areas shall be protected with adequate erosion control measures by the end of each workday. Such violations shall result in the associated monetary **penalty of $1,000 per day until the corrective action(s) has been completed.**

Erosion Control Devices shall be maintained in a continual manner until they are no longer needed as determined by the Engineer. After any rain event, the Contractor shall begin maintenance of the devices within 24 hours or as soon as practical when wet conditions do not allow for operation of heavy equipment. This is considered not practical when in the opinion of the Engineer or his representative, heavy equipment on extremely wet embankments will cause more damage than if some time is allowed for drying. When the Contractor is working on the project and urgent attention is required, the Contractor shall respond immediately when directed by the Engineer or Inspector to address installation and / or maintenance of erosion control devices or any other work to address sedimentation loss.

If the Contractor is not currently working on the project, he / she shall respond within 24 hours with adequate equipment and personnel to address any erosion and loss of sedimentation.

Failure to comply with any part of this special provision shall be considered a violation of the Environmental Stewardship and Performance of Erosion Control Special Provision. Such violations shall result in the associated monetary penalty of $1,000 per day until the corrective action(s) has been completed.

If required, the Engineer may exercise the provisions of Article 105-16, "Failure to Maintain the Project or Perform Erosion Control Work", in addition to any associated penalties.

No direct payment will be made under Response for Erosion Control. This work will be considered incidental to the various other bid items in the Contract.

STABILIZATION REQUIREMENTS

Stabilization for this project shall comply with the time frame guidelines as specified by the NCG-010000 general construction permit effective August 3, 2011 issued by the North Carolina Department of Environment and Natural Resources Division of Water Quality. Temporary or permanent ground cover stabilization shall occur within 7 calendar days from the last land-disturbing activity, with the following exceptions in which temporary or permanent ground cover shall be provided in 14 calendar days from the last land-disturbing activity:

- Slopes between 2:1 and 3:1, with a slope length of 10 ft. or less
- Slopes 3:1 or flatter, with a slope of length of 50 ft. or less
- Slopes 4:1 or flatter

The stabilization timeframe for High Quality Water (HQW) Zones shall be 7 calendar days with no exceptions for slope grades or lengths. High Quality Water Zones (HQW) Zones are defined by North Carolina Administrative Code 15A NCAC 04A.0105 (25). Temporary and permanent ground cover stabilization shall be achieved in accordance with the provisions in this contract and as directed.

PERMANENT SEEDING AND MULCHING

The Department desires that permanent seeding and mulching be established on this project as soon as practical after slopes or portions of slopes have been graded. As an incentive to obtain an early stand of vegetation on this project, the Contractor's attention is called to the following:

For all permanent seeding and mulching that is satisfactorily completed in accordance with the requirements of Section 1660 in the *2012 Standard Specifications* and within the following percentages of elapsed contract times, an additional payment will be made to the Contractor as an incentive additive. The incentive additive will be determined by multiplying the number of acres of seeding and mulching satisfactorily completed times the contract unit bid price per acre for Seeding and Mulching times the appropriate percentage additive.

Percentage of Elapsed Contract Time	Percentage Additive
0% - 30%	30%
30.01% - 50%	15%

Percentage of elapsed contract time is defined as the number of calendar days from the date of availability of the contract to the date the permanent seeding and mulching is acceptably completed divided by the total original contract time.

SEEDING AND MULCHING **(West)**

The kinds of seed and fertilizer, and the rates of application of seed, fertilizer, and limestone, shall be as stated below. During periods of overlapping dates, the kind of seed to be used shall be determined. All rates are in pounds per acre.

Shoulder and Median Areas

August 1 - June 1		**May 1 - September 1**	
20#	Kentucky Bluegrass	20#	Kentucky Bluegrass
75#	Hard Fescue	75#	Hard Fescue
25#	Rye Grain	10#	German or Browntop Millet
500#	Fertilizer	500#	Fertilizer
4000#	Limestone	4000#	Limestone

Areas Beyond the Mowing Pattern, Waste and Borrow Areas

August 1 - June 1		**May 1 - September 1**	
100#	Tall Fescue	100#	Tall Fescue
15#	Kentucky Bluegrass	15#	Kentucky Bluegrass
30#	Hard Fescue	30#	Hard Fescue
25#	Rye Grain	10#	German or Browntop Millet
500#	Fertilizer	500#	Fertilizer
4000#	Limestone	4000#	Limestone

Approved Tall Fescue Cultivars

2nd Millennium	Duster	Magellan	Rendition
Avenger	Endeavor	Masterpiece	Scorpion
Barlexas	Escalade	Matador	Shelby
Barlexas II	Falcon II, III, IV & V	Matador GT	Signia
Barrera	Fidelity	Millennium	Silverstar
Barrington	Finesse II	Montauk	Southern Choice II
Biltmore	Firebird	Mustang 3	Stetson
Bingo	Focus	Olympic Gold	Tarheel
Bravo	Grande II	Padre	Titan Ltd

Cayenne	Greenkeeper	Paraiso	Titanium
Chapel Hill	Greystone	Picasso	Tomahawk
Chesapeake	Inferno	Piedmont	Tacer
Constitution	Justice	Pure Gold	Trooper
Chipper	Jaguar 3	Prospect	Turbo
Coronado	Kalahari	Quest	Ultimate
Coyote	Kentucky 31	Rebel Exeda	Watchdog
Davinci	Kitty Hawk	Rebel Sentry	Wolfpack
Dynasty	Kitty Hawk 2000	Regiment II	
Dominion	Lexington	Rembrandt	

Approved Kentucky Bluegrass Cultivars

Alpine	Bariris	Envicta	Rugby
Apollo	Bedazzled	Impact	Rugby II
Arcadia	Bordeaux	Kenblue	Showcase
Arrow	Champagne	Midnight	Sonoma
Award	Chicago II	Midnight II	

Approved Hard Fescue Cultivars

Chariot	Nordic	Rhino	Warwick
Firefly	Oxford	Scaldis II	
Heron	Reliant II	Spartan II	
Minotaur	Reliant IV	Stonehenge	

On cut and fill slopes 2:1 or steeper add 20# Sericea Lespedeza January 1 - December 31.

Fertilizer shall be 10-20-20 analysis. A different analysis of fertilizer may be used provided the 1-2-2 ratio is maintained and the rate of application adjusted to provide the same amount of plant food as a 10-20-20 analysis and as directed.

PLANT AND PEST QUARANTINES
(Imported Fire Ant, Gypsy Moth, Witchweed, and Other Noxious Weeds)

Within quarantined area

This project may be within a county regulated for plant and/or pests. If the project or any part of the Contractor's operations is located within a quarantined area, thoroughly clean all equipment prior to moving out of the quarantined area. Comply with federal/state regulations by obtaining a certificate or limited permit for any regulated article moving from the quarantined area.

Originating in a quarantined county

Obtain a certificate or limited permit issued by the N.C. Department of Agriculture/United States Department of Agriculture. Have the certificate or limited permit accompany the article when it arrives at the project site.

Contact

Contact the N.C. Department of Agriculture/United States Department of Agriculture at 1-800-206-9333, 919-733-6932, or *http://www.ncagr.com/plantind/* to determine those specific project sites located in the quarantined area or for any regulated article used on this project originating in a quarantined county.

Regulated Articles Include

1. Soil, sand, gravel, compost, peat, humus, muck, and decomposed manure, separately or with other articles. This includes movement of articles listed above that may be associated with cut/waste, ditch pulling, and shoulder cutting.
2. Plants with roots including grass sod.
3. Plant crowns and roots.
4. Bulbs, corms, rhizomes, and tubers of ornamental plants.
5. Hay, straw, fodder, and plant litter of any kind.
6. Clearing and grubbing debris.
7. Used agricultural cultivating and harvesting equipment.
8. Used earth-moving equipment.
9. Any other products, articles, or means of conveyance, of any character, if determined by an inspector to present a hazard of spreading imported fire ant, gypsy moth, witchweed or other noxious weeds.

NCDOT GENERAL SEED SPECIFICATION FOR SEED QUALITY

Seed shall be sampled and tested by the North Carolina Department of Agriculture and Consumer Services, Seed Testing Laboratory. When said samples are collected, the vendor shall supply an independent laboratory report for each lot to be tested. Results from seed so sampled shall be final. Seed not meeting the specifications shall be rejected by the Department of Transportation and shall not be delivered to North Carolina Department of Transportation warehouses. If seed has been delivered it shall be available for pickup and replacement at the supplier's expense.

Any re-labeling required by the North Carolina Department of Agriculture and Consumer Services, Seed Testing Laboratory, that would cause the label to reflect as otherwise specified herein shall be rejected by the North Carolina Department of Transportation.

Seed shall be free from seeds of the noxious weeds Johnsongrass, Balloonvine, Jimsonweed, Witchweed, Itchgrass, Serrated Tussock, Showy Crotalaria, Smooth Crotalaria, Sicklepod, Sandbur, Wild Onion, and Wild Garlic. Seed shall not be labeled with the above weed species on

the seed analysis label. Tolerances as applied by the Association of Official Seed Analysts will NOT be allowed for the above noxious weeds except for Wild Onion and Wild Garlic.

Tolerances established by the Association of Official Seed Analysts will generally be recognized. However, for the purpose of figuring pure live seed, the found pure seed and found germination percentages as reported by the North Carolina Department of Agriculture and Consumer Services, Seed Testing Laboratory will be used. Allowances, as established by the NCDOT, will be recognized for minimum pure live seed as listed on the following pages.

The specifications for restricted noxious weed seed refers to the number per pound as follows:

Restricted Noxious Weed	Limitations per Lb. Of Seed	Restricted Noxious Weed	Limitations per Lb. of Seed
Blessed Thistle	4 seeds	Cornflower (Ragged Robin)	27 seeds
Cocklebur	4 seeds	Texas Panicum	27 seeds
Spurred Anoda	4 seeds	Bracted Plantain	54 seeds
Velvetleaf	4 seeds	Buckhorn Plantain	54 seeds
Morning-glory	8 seeds	Broadleaf Dock	54 seeds
Corn Cockle	10 seeds	Curly Dock	54 seeds
Wild Radish	12 seeds	Dodder	54 seeds
Purple Nutsedge	27 seeds	Giant Foxtail	54 seeds
Yellow Nutsedge	27 seeds	Horsenettle	54 seeds
Canada Thistle	27 seeds	Quackgrass	54 seeds
Field Bindweed	27 seeds	Wild Mustard	54 seeds
Hedge Bindweed	27 seeds		

Seed of Pensacola Bahiagrass shall not contain more than 7% inert matter, Kentucky Bluegrass, Centipede and Fine or Hard Fescue shall not contain more than 5% inert matter whereas a maximum of 2% inert matter will be allowed on all other kinds of seed. In addition, all seed shall not contain more than 2% other crop seed nor more than 1% total weed seed. The germination rate as tested by the North Carolina Department of Agriculture shall not fall below 70%, which includes both dormant and hard seed. Seed shall be labeled with not more than 7%, 5% or 2% inert matter (according to above specifications), 2% other crop seed and 1% total weed seed.

Exceptions may be made for minimum pure live seed allowances when cases of seed variety shortages are verified. Pure live seed percentages will be applied in a verified shortage situation. Those purchase orders of deficient seed lots will be credited with the percentage that the seed is deficient.

FURTHER SPECIFICATIONS FOR EACH SEED GROUP ARE GIVEN BELOW:

Minimum 85% pure live seed; maximum 1% total weed seed; maximum 2% total other crop seed; maximum 144 restricted noxious weed seed per pound. Seed less than 83% pure live seed will not be approved.

Sericea Lespedeza
Oats (seeds)

Minimum 80% pure live seed; maximum 1% total weed seed; maximum 2% total other crop; maximum 144 restricted noxious weed seed per pound. Seed less than 78% pure live seed will not be approved.

Tall Fescue (all approved varieties)	Bermudagrass
Kobe Lespedeza	Browntop Millet
Korean Lespedeza	German Millet - Strain R
Weeping Lovegrass	Clover - Red/White/Crimson
Carpetgrass	

Minimum 78% pure live seed; maximum 1% total weed seed; maximum 2% total other crop seed; maximum 144 restricted noxious weed seed per pound. Seed less than 76% pure live seed will not be approved.

Common or Sweet Sundangrass

Minimum 76% pure live seed; maximum 1% total weed seed; maximum 2% total other crop seed; maximum 144 restricted noxious weed seed per pound. Seed less than 74% pure live seed will not be approved.

Rye (grain; all varieties)
Kentucky Bluegrass (all approved varieties)
Hard Fescue (all approved varieties)
Shrub (bicolor) Lespedeza

Minimum 70% pure live seed; maximum 1% total weed seed; maximum 2% total other crop seed; maximum 144 restricted noxious weed seed per pound. Seed less than 70% pure live seed will not be approved.

Centipedegrass	Japanese Millet
Crownvetch	Reed Canary Grass
Pensacola Bahiagrass	Zoysia

Minimum 70% pure live seed; maximum 1% total weed seed; maximum 2% total other crop seed; maximum 5% inert matter;maximum 144 restricted noxious weed seed per pound.

Barnyard Grass	Bristly Locust	Birdsfoot Trefoil
Big Bluestem	Indiangrass	Orchardgrass
Little Bluestem	Switchgrass	Yellow Blossom Sweet Clover

ERRATA

Revise the *2012 Standard Specifications* as follows:

Division 2

Page 2-7, line 31, Article 215-2 Construction Methods, replace "Article 107-26" with "Article 107-25".

Page 2-17, Article 226-3, Measurement and Payment, line 2, delete "pipe culverts,".

Page 2-20, Subarticle 230-4(B), Contractor Furnished Sources, change references as follows: Line 1, replace "(4) Buffer Zone" with "(c) Buffer Zone"; **Line 12,** replace "(5) Evaluation for Potential Wetlands and Endangered Species" with "(d) Evaluation for Potential Wetlands and Endangered Species"; and **Line 33,** replace "(6) Approval" with "(4) Approval".

Division 4

Page 4-77, line 27, Subarticle 452-3(C) Concrete Coping, replace "sheet pile" with "reinforcement".

Division 6

Page 6-7, line 31, Article 609-3 Field Verification of Mixture and Job Mix Formula Adjustments, replace "30" with "45".

Page 6-10, line 42, Subarticle 609-6(C)(2), replace "Subarticle 609-6(E)" with "Subarticle 609-6(D)".

Page 6-11, Table 609-1 Control Limits, replace "Max. Spec. Limit" for the Target Source of $P_{0.075}/P_{be}$ Ratio with "1.0".

Page 6-40, Article 650-2 Materials, replace "Subarticle 1012-1(F)" with "Subarticle 1012-1(E)"

Division 10

Page 10-74, Table 1056-1 Geotextile Requirements, replace "50%" for the UV Stability (Retained Strength) of Type 5 geotextiles with "70%".

Division 12

Page 12-8, Table 1205-4 and 1205-5, replace "THERMOPLASTIC" in the title of these tables with "POLYUREA".

Division 15

Page 15-6, Subarticle 1510-3(B), after line 21, replace the allowable leakage formula with the following: $W = LD\sqrt{P} \div 148{,}000$

Page 15-6, Subarticle 1510-3(B), line 32, delete "may be performed concurrently or" and replace with "shall be performed".

Page 15-17, Subarticle 1540-3(E), line 27, delete "Type 1".

Division 17

Page 17-26, line 42, Subarticle 1731-3(D) Termination and Splicing within Interconnect Center, delete this subarticle.

MINIMUM WAGES

FEDERAL The Fair Labor Standards Act provides that with certain exceptions every employer shall pay wages at the rate of not less than SEVEN DOLLARS AND TWENTY-FIVE CENTS ($7.25) per hour.

STATE The North Carolina Minimum Wage Act provides that every employer shall pay to each of his employees' wages at a rate of not less than SEVEN DOLLARS AND TWENTY-FIVE CENTS ($7.25) per hour.

The minimum wage paid to all skilled labor employed on this contract shall be SEVEN DOLLARS AND TWENTY-FIVE CENTS ($7.25) per hour.

The minimum wage paid to all intermediate labor employed on this contract shall be SEVEN DOLLARS AND TWENTY-FIVE CENTS ($7.25) per hour.

The minimum wage paid to all unskilled labor on this contract shall be SEVEN DOLLARS AND TWENTY-FIVE CENTS ($7.25) per hour.

This determination of the intent of the application of this act to the contract on this project is the responsibility of the Contractor.

The Contractor shall have no claim against the Department of Transportation for any changes in the minimum wage laws, State or Federal. It is the responsibility of the Contractor to keep himself fully informed of all Federal and State Laws affecting his contract.

NORTH CAROLINA DEPARTMENT OF TRANSPORTATION
BID FORM

WBS Element:_____11C.095055_____ **Contract Number: 11-02-506**
Description: Grading, Drainage and Base on SR-1328"B" (Brookshire Road) in Watauga County

LINE	ITEM NUMBER	SECT	DESCRIPTION	QUAN	UNIT	UNIT BID	AMOUNT BID
1	0000100000-N	800	Mobilization	1	LS		
2	0043000000-N	226	Comprehensive Grading	1	LS		
3	0335300000-E	305	18" Drainage Pipe	120	LFT		
4	0343000000-E	310	15" Side Drain Pipe	40	LFT		
5	1121000000-E	520	Aggregate Base Course	1,100	TON		
6	1220000000-E	545	Incidental Stone Base	100	TON		
7	3574000000-E	867	Fence Reset- Various	100	LFT		
8	3656000000-E	876	Geotextile for Drainage	100	SYD		
9	6000000000-E	1605	Temporary Silt Fence	1,600	LFT		
10	6009000000-E	1610	Stone for Erosion Control, Class B	100	TON		
11	6012000000-E	1610	Sediment Control Stone	20	TON		
12	6015000000-E	1615	Temporary Mulching	1	ACRE		
13	6018000000-E	1620	Seed for Temporary Seeding	25	LB		
14	6021000000-E	1620	Fertilizer for Temporary Seeding	0.5	TON		
15	6030000000-E	1630	Silt Excavation	400	CYD		
16	6036000000-E	1631	Matting for Erosion Control	1000	SYD		
17	6037000000-E	SP	Coir Fiber Mat	250	SYD		
18	6042000000-E	1632	¼" Hardware Cloth	50	LFT		
19	6071010000-E	SP	Wattles	170	LFT		
20	6071020000-E	SP	Polyacrylamide	5	LBS		
21	6071030000-E	1640	Coir Fiber Baffle	100	LFT		
22	6084000000-E	1660	Seeding & Mulching	2.0	ACR		

Transfer Total to Page 2

NORTH CAROLINA DEPARTMENT OF TRANSPORTATION
BID FORM

WBS Element:_____11C.095055_____ **Contract Number: 11-02-506**
Description: Grading, Drainage and Base on SR-1328"B" (Brookshire Road) in Watauga County

TOTAL BID FOR PROJECT:_____

THIS SECTION TO BE COMPLETED BY NORTH CAROLINA DEPARTMENT OF TRANSPORTATION

This bid has been reviewed in accordance with Article 103-1 of the Standard Specifications for Roads and Structures 2006.

Reviewed by_____ _____(date)

EXECUTION OF BID

NON-COLLUSION AFFIDAVIT, DEBARMENT CERTIFICATION AND GIFT BAN CERTIFICATION

CORPORATION

The person executing the bid, on behalf of the Bidder, being duly sworn, solemnly swears (or affirms) that neither he, nor any official, agent or employee of the bidder has entered into any agreement, participated in any collusion, or otherwise taken any action which is in restraint of free competitive bidding in connection with any bid or contract, that the bidder has not been convicted of violating *N.C.G.S. § 133-24* within the last three years, and that the Bidder intends to do the work with its own bonafide employees or subcontractors and is not bidding for the benefit of another contractor.

In addition, execution of this bid in the proper manner also constitutes the Bidder's certification of status under penalty of perjury under the laws of the United States in accordance with the Debarment Certification attached, provided that the Debarment Certification also includes any required statements concerning exceptions that are applicable.

N.C.G.S. § 133-32 and Executive Order 24 prohibit the offer to, or acceptance by, any State Employee of any gift from anyone with a contract with the State, or from any person seeking to do business with the State. By execution of any response in this procurement, you attest, for your entire organization and its employees or agents, that you are not aware that any such gift has been offered, accepted, or promised by any employees of your organization.

SIGNATURE OF CONTRACTOR

_____

Full name of Corporation

_____

Address as Prequalified

Attest_____ By_____

Secretary/Assistant Secretary
Select appropriate title

President/Vice President/Assistant Vice President
Select appropriate title

_____ _____

Print or type Signer's name

Print or type Signer's name

CORPORATE SEAL

AFFIDAVIT MUST BE NOTARIZED

Subscribed and sworn to before me this the

_____ day of _____, 20_____.

_____

Signature of Notary Public

NOTARY SEAL

of _____County.

State of _____

My Commission Expires: _____

EXECUTION OF BID

NON-COLLUSION AFFIDAVIT, DEBARMENT CERTIFICATION AND GIFT BAN CERTIFICATION

PARTNERSHIP

The person executing the bid, on behalf of the Bidder, being duly sworn, solemnly swears (or affirms) that neither he, nor any official, agent or employee of the bidder has entered into any agreement, participated in any collusion, or otherwise taken any action which is in restraint of free competitive bidding in connection with any bid or contract, that the bidder has not been convicted of violating *N.C.G.S. § 133-24* within the last three years, and that the Bidder intends to do the work with its own bonafide employees or subcontractors and is not bidding for the benefit of another contractor.

In addition, execution of this bid in the proper manner also constitutes the Bidder's certification of status under penalty of perjury under the laws of the United States in accordance with the Debarment Certification attached, provided that the Debarment Certification also includes any required statements concerning exceptions that are applicable.

N.C.G.S. § 133-32 and Executive Order 24 prohibit the offer to, or acceptance by, any State Employee of any gift from anyone with a contract with the State, or from any person seeking to do business with the State. By execution of any response in this procurement, you attest, for your entire organization and its employees or agents, that you are not aware that any such gift has been offered, accepted, or promised by any employees of your organization.

SIGNATURE OF CONTRACTOR

_____

Full Name of Partnership

_____

Address as Prequalified

_____ By_____

Signature of Witness Signature of Partner

_____ _____

Print or type Signer's name Print or type Signer's name

AFFIDAVIT MUST BE NOTARIZED

Subscribed and sworn to before me this the

_____ day of _____, 20_____.

_____

Signature of Notary Public

NOTARY SEAL

of _____County.

State of _____

My Commission Expires: _____

EXECUTION OF BID

NON-COLLUSION AFFIDAVIT, DEBARMENT CERTIFICATION AND GIFT BAN CERTIFICATION

LIMITED LIABILITY COMPANY

The person executing the bid, on behalf of the Bidder, being duly sworn, solemnly swears (or affirms) that neither he, nor any official, agent or employee of the bidder has entered into any agreement, participated in any collusion, or otherwise taken any action which is in restraint of free competitive bidding in connection with any bid or contract, that the bidder has not been convicted of violating *N.C.G.S. § 133-24* within the last three years, and that the Bidder intends to do the work with its own bonafide employees or subcontractors and is not bidding for the benefit of another contractor.

In addition, execution of this bid in the proper manner also constitutes the Bidder's certification of status under penalty of perjury under the laws of the United States in accordance with the Debarment Certification attached, provided that the Debarment Certification also includes any required statements concerning exceptions that are applicable.

N.C.G.S. § 133-32 and Executive Order 24 prohibit the offer to, or acceptance by, any State Employee of any gift from anyone with a contract with the State, or from any person seeking to do business with the State. By execution of any response in this procurement, you attest, for your entire organization and its employees or agents, that you are not aware that any such gift has been offered, accepted, or promised by any employees of your organization.

SIGNATURE OF CONTRACTOR

_____

Full Name of Firm

_____

Address as Prequalified

_____ Signature of Manager_____

Signature of Witness | Individually

_____ _____

Print or type Signer's name | Print or type Signer's name

AFFIDAVIT MUST BE NOTARIZED

Subscribed and sworn to before me this the

_____ day of _____, 20_____.

_____

Signature of Notary Public

NOTARY SEAL

of _____County.

State of _____

My Commission Expires: _____

EXECUTION OF BID

NON-COLLUSION AFFIDAVIT, DEBARMENT CERTIFICATION AND GIFT BAN CERTIFICATION

JOINT VENTURE (2) or (3)

The person executing the bid, on behalf of the Bidder, being duly sworn, solemnly swears (or affirms) that neither he, nor any official, agent or employee of the bidder has entered into any agreement, participated in any collusion, or otherwise taken any action which is in restraint of free competitive bidding in connection with any bid or contract, that the bidder has not been convicted of violating *N.C.G.S. § 133-24* within the last three years, and that the Bidder intends to do the work with its own bonafide employees or subcontractors and is not bidding for the benefit of another contractor.

In addition, execution of this bid in the proper manner also constitutes the Bidder's certification of status under penalty of perjury under the laws of the United States in accordance with the Debarment Certification attached, provided that the Debarment Certification also includes any required statements concerning exceptions that are applicable.

N.C.G.S. § 133-32 and Executive Order 24 prohibit the offer to, or acceptance by, any State Employee of any gift from anyone with a contract with the State, or from any person seeking to do business with the State. By execution of any response in this procurement, you attest, for your entire organization and its employees or agents, that you are not aware that any such gift has been offered, accepted, or promised by any employees of your organization.

SIGNATURE OF CONTRACTOR

Instructions**: 2 Joint Venturers** Fill in lines (1), (2) and (3) and execute. **3 Joint Venturers** Fill in lines (1), (2), (3) and (4) and execute. On Line (1), fill in the name of the Joint Venture Company. On Line (2), fill in the name of one of the joint venturers and execute below in the appropriate manner. On Line (3), print or type the name of the other joint venturer and execute below in the appropriate manner. On Line (4), fill in the name of the third joint venturer, if applicable and execute below in the appropriate manner.

(1) _____

Name of Joint Venture

(2) _____

Name of Contractor

_____

Address as Prequalified

_____		_____
Signature of Witness or Attest	By	Signature of Contractor
_____		_____
Print or type Signer's name		Print or type Signer's name

If Corporation, affix Corporate Seal and

(3) _____

Name of Contractor

_____

Address as Prequalified

_____		_____
Signature of Witness or Attest	By	Signature of Contractor
_____		_____
Print or type Signer's name		Print or type Signer's name

If Corporation, affix Corporate Seal and

(4) _____

Name of Contractor (for 3 Joint Venture only)

_____

Address as Prequalified

_____		_____
Signature of Witness or Attest	By	Signature of Contractor
_____		_____
Print or type Signer's name		Print or type Signer's name

If Corporation, affix Corporate Seal

NOTARY SEAL
Affidavit must be notarized for Line (2)
Subscribed and sworn to before me this the
_____ day of _____, 20_____.

_____
Signature of Notary Public
of _____County.
State of _____
My Commission Expires: _____

NOTARY SEAL
Affidavit must be notarized for Line (3)
Subscribed and sworn to before me this the
_____ day of _____, 20_____.

_____
Signature of Notary Public
of _____County.
State of _____
My Commission Expires: _____

OTARY SEAL
Affidavit must be notarized for Line (4)
Subscribed and sworn to before me this the
_____ day of _____, 20_____.

_____
Signature of Notary Public
of _____County.
State of _____
My Commission Expires: _____

EXECUTION OF BID

NON-COLLUSION AFFIDAVIT, DEBARMENT CERTIFICATION AND GIFT BAN CERTIFICATION

INDIVIDUAL DOING BUSINESS UNDER A FIRM NAME

The person executing the bid, on behalf of the Bidder, being duly sworn, solemnly swears (or affirms) that neither he, nor any official, agent or employee of the bidder has entered into any agreement, participated in any collusion, or otherwise taken any action which is in restraint of free competitive bidding in connection with any bid or contract, that the bidder has not been convicted of violating *N.C.G.S. § 133-24* within the last three years, and that the Bidder intends to do the work with its own bonafide employees or subcontractors and is not bidding for the benefit of another contractor.

In addition, execution of this bid in the proper manner also constitutes the Bidder's certification of status under penalty of perjury under the laws of the United States in accordance with the Debarment Certification attached, provided that the Debarment Certification also includes any required statements concerning exceptions that are applicable.

N.C.G.S. § 133-32 and Executive Order 24 prohibit the offer to, or acceptance by, any State Employee of any gift from anyone with a contract with the State, or from any person seeking to do business with the State. By execution of any response in this procurement, you attest, for your entire organization and its employees or agents, that you are not aware that any such gift has been offered, accepted, or promised by any employees of your organization.

SIGNATURE OF CONTRACTOR

Name of Contractor

_____

Individual Name

Trading and doing business as

_____

Full name of Firm

_____

Address as Prequalified

_____	_____
Signature of Witness	Signature of Contractor, Individually
_____	_____
Print or type Signer's name	Print or type Signer's name

AFFIDAVIT MUST BE NOTARIZED

Subscribed and sworn to before me this the

_____ day of _____, 20_____.

_____

Signature of Notary Public

NOTARY SEAL

of _____County.

State of _____

My Commission Expires: _____

EXECUTION OF BID

NON-COLLUSION AFFIDAVIT, DEBARMENT CERTIFICATION AND GIFT BAN CERTIFICATION

INDIVIDUAL DOING BUSINESS IN HIS OWN NAME

The person executing the bid, on behalf of the Bidder, being duly sworn, solemnly swears (or affirms) that neither he, nor any official, agent or employee of the bidder has entered into any agreement, participated in any collusion, or otherwise taken any action which is in restraint of free competitive bidding in connection with any bid or contract, that the bidder has not been convicted of violating *N.C.G.S. § 133-24* within the last three years, and that the Bidder intends to do the work with its own bonafide employees or subcontractors and is not bidding for the benefit of another contractor.

In addition, execution of this bid in the proper manner also constitutes the Bidder's certification of status under penalty of perjury under the laws of the United States in accordance with the Debarment Certification attached, provided that the Debarment Certification also includes any required statements concerning exceptions that are applicable.

N.C.G.S. § 133-32 and Executive Order 24 prohibit the offer to, or acceptance by, any State Employee of any gift from anyone with a contract with the State, or from any person seeking to do business with the State. By execution of any response in this procurement, you attest, for your entire organization and its employees or agents, that you are not aware that any such gift has been offered, accepted, or promised by any employees of your organization.

SIGNATURE OF CONTRACTOR

Name of Contractor _____

Print or type Individual Name

_____

Address as Prequalified

_____

Signature of Contractor, Individually

_____

Print or type Signer's name

_____

Signature of Witness

_____

Print or type Signer's name

AFFIDAVIT MUST BE NOTARIZED

Subscribed and sworn to before me this the

_____ day of _____, 20_____.

_____

Signature of Notary Public

NOTARY SEAL

of _____County.

State of _____

My Commission Expires: _____

DEBARMENT CERTIFICATION

Conditions for certification:

1. The prequalified bidder shall provide immediate written notice to the Department if at any time the bidder learns that his certification was erroneous when he submitted his debarment certification or explanation filed with the Department, or has become erroneous because of changed circumstances.

2. The terms *covered transaction, debarred, suspended, ineligible, lower tier covered transaction, participant, person, primary covered transaction, principal, proposal, and voluntarily excluded*, as used in this provision, have the meanings set out in the Definitions and Coverage sections of the rules implementing Executive Order 12549. A copy of the Federal Rules requiring this certification and detailing the definitions and coverages may be obtained from the Contract Officer of the Department.

3. The prequalified bidder agrees by submitting this form, that he will not knowingly enter into any lower tier covered transaction with a person who is debarred, suspended, declared ineligible, or voluntarily excluded from participation in NCDOT contracts, unless authorized by the Department.

4. For Federal Aid projects, the prequalified bidder further agrees that by submitting this form he will include the Federal-Aid Provision titled *Required Contract Provisions Federal-Aid Construction Contract (Form FHWA PR 1273)* provided by the Department, without subsequent modification, in all lower tier covered transactions.

5. The prequalified bidder may rely upon a certification of a participant in a lower tier covered transaction that he is not debarred, suspended, ineligible, or voluntarily excluded from the covered transaction, unless he knows that the certification is erroneous. The bidder may decide the method and frequency by which he will determine the eligibility of his subcontractors.

6. Nothing contained in the foregoing shall be construed to require establishment of a system of records in order to render in good faith the certification required by this provision. The knowledge and information of a participant is not required to exceed that which is normally possessed by a prudent person in the ordinary course of business dealings.

7. Except as authorized in paragraph 6 herein, the Department may terminate any contract if the bidder knowingly enters into a lower tier covered transaction with a person who is suspended, debarred, ineligible, or voluntarily excluded from participation in this transaction, in addition to other remedies available by the Federal Government.

DEBARMENT CERTIFICATION

The prequalified bidder certifies to the best of his knowledge and belief, that he and his principals:

a. Are not presently debarred, suspended, proposed for debarment, declared ineligible, or voluntarily excluded from covered transactions by any Federal department or agency;

b. Have not within a three-year period preceding this proposal been convicted of or had a civil judgment rendered against them for commission of fraud or a criminal offense in connection with obtaining, attempting to obtain, or performing a public (Federal, State or local) transaction or contract under a public transaction; violation of Federal or State antitrust statutes or commission of embezzlement, theft, forgery, bribery, falsification or destruction of records; making false statements; or receiving stolen property;

c. Are not presently indicted for or otherwise criminally or civilly charged by a governmental entity (Federal, State or local) with commission of any of the offenses enumerated in paragraph b. of this certification; and

d. Have not within a three-year period preceding this proposal had one or more public transactions (Federal, State or local) terminated for cause or default.

e. Will submit a revised Debarment Certification immediately if his status changes and will show in his bid proposal an explanation for the change in status.

If the prequalified bidder cannot certify that he is not debarred, he shall provide an explanation with this submittal. An explanation will not necessarily result in denial of participation in a contract.

Failure to submit a non-collusion affidavit and debarment certification will result in the prequalified bidder's bid being considered non-responsive.

☐ Check here if an explanation is attached to this certification.

Contract No: 11-02-506

County: Watauga

ACCEPTED BY THE
DEPARTMENT OF TRANSPORTATION

_____

Contract Officer

_____

Date

LISTING OF MB & WB SUBCONTRACTORS

Sheet ____ of ____

FIRM NAME AND ADDRESS	MB OR WB	ITEM NO.	ITEM DESCRIPTION	* AGREED UPON UNIT PRICE	DOLLAR VOL. OF SUBLET ITEM

COLUMN
DOLLAR VOLUME OF WB SUBCONTRACTOR_____
WB PERCENTAGE OF TOTAL CONTRACT BID PRICE _____
DOLLAR VOLUME OF MB SUBCONTRACTOR _____
MB PERCENTAGE OF TOTAL CONTRACT BID PRICE _____

*THE DOLLAR VOLUME SHOWN IN THIS

SHALL BE THE ACTUAL PRICE AGREED UPON BY THE PRIME CONTRACTOR AND THE MB/WB SUB-CONTRACTOR. THESE PRICES WILL BE USED TO DETERMINE THE PERCENTAGES OF MB/WB PARTICIPATION IN THE CONTRACT.

EROSION CONTROL SCHEDULE

Silt Basin Type B's will be constructed to the dimension of 9 feet by 3 feet by 3 feet unless otherwise noted on the plans.

Where slope protection treatment is required, Section 876 and Section 1042 of the 2006 Standard Specifications for Roads and Structures will be followed. Any material obtained from the project must be clean before being placed.

Generally, the order of installation of the erosion control measures will be as follows:

A. Temporary Silt Basins shall be installed before clearing andgrubbing begins.

B. Silt Fences and Temporary Silt Ditches shall be installed after clearing and before grading.

C. Temporary Stone Ditch Checks shall be installed as soon as ditchline is established.

D. Pipe Outlet and Inlet Protection will be done as soon as the pipe is installed.

E. Seeding and other permanent erosion control measures are to be implemented as soon as practical.

Std. #	Description	Symbol
1605.01	Temporary Silt Fence	
1606.01	Special Sediment Control Fence	
1622.01	Temporary Berms and Slope Drains	
1630.02	Silt Basin Type B	
1630.03	Temporary Silt Ditch	TSD
1630.05	Temporary Diversion	TD
1630.06	Special Stilling Basin	
1632.03	Rock Inlet Sediment Trap Type C	
1633.01	Temporary Rock Silt Check Type-A	
	Temporary Rock Silt Check Type-A with Matting and Polyacrylamide (PAM)	
	Temporary Rock Silt Check Type-B	
	Wattle	
	Wattle with Polyacrylamide (PAM)	
1634.02	Temporary Rock Sediment Dam Type-B	
1635.01	Rock Pipe Inlet Sediment Trap Type-A	

PLAT OF SR 1328'B' - BROOKSHIRE ROAD	
NEW RIVER TOWNSHIP -WATAUGA COUNTY	
GRADE, DRAIN, BASE, AND PAVE - 0.10 MILES	
SCALE 1" = 50'	
Revised: ~~12-06-2010~~ 2/8/2011	EC-1 of 4

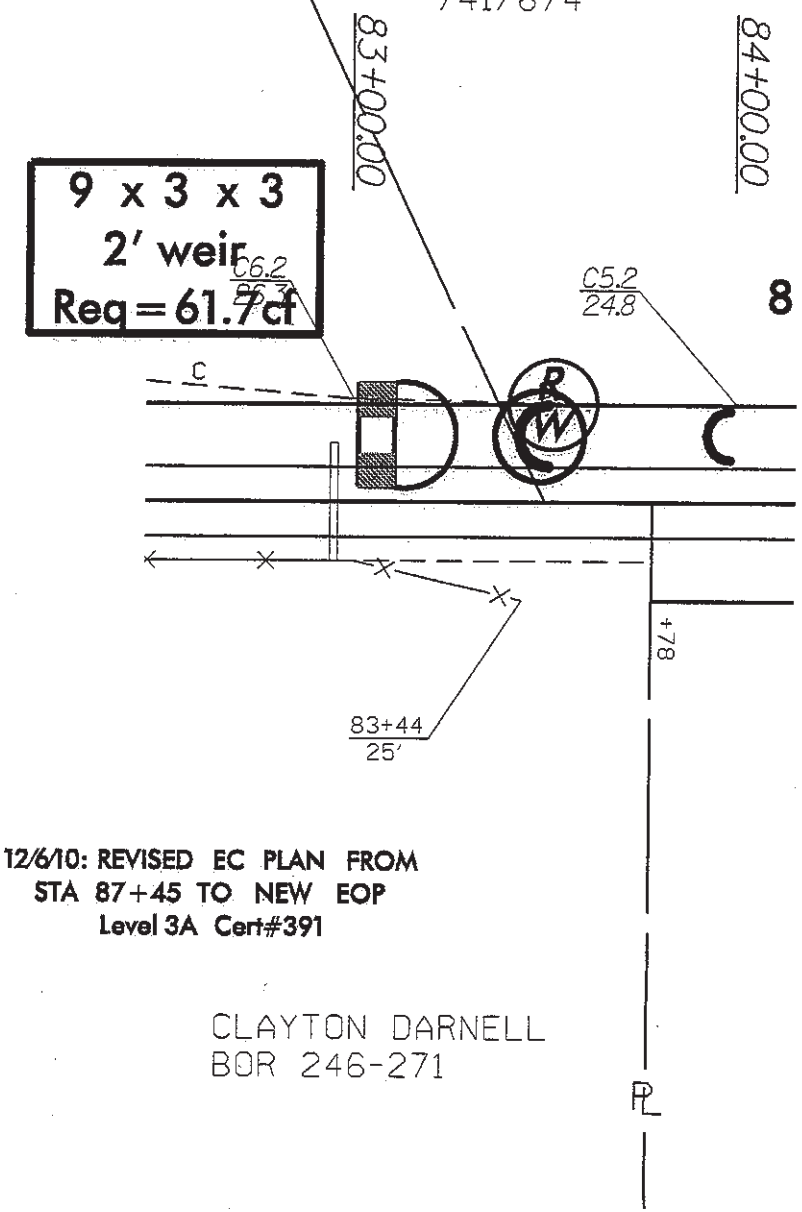

12/6/10: REVISED EC PLAN FROM STA 87+45 TO NEW EOP
Level 3A Cert#391

NOTE:
PERIMETER EROSION CONTROL MEASURES SHALL BE INSTALLED DURING CLEARING AND GRUBBING PHASE.

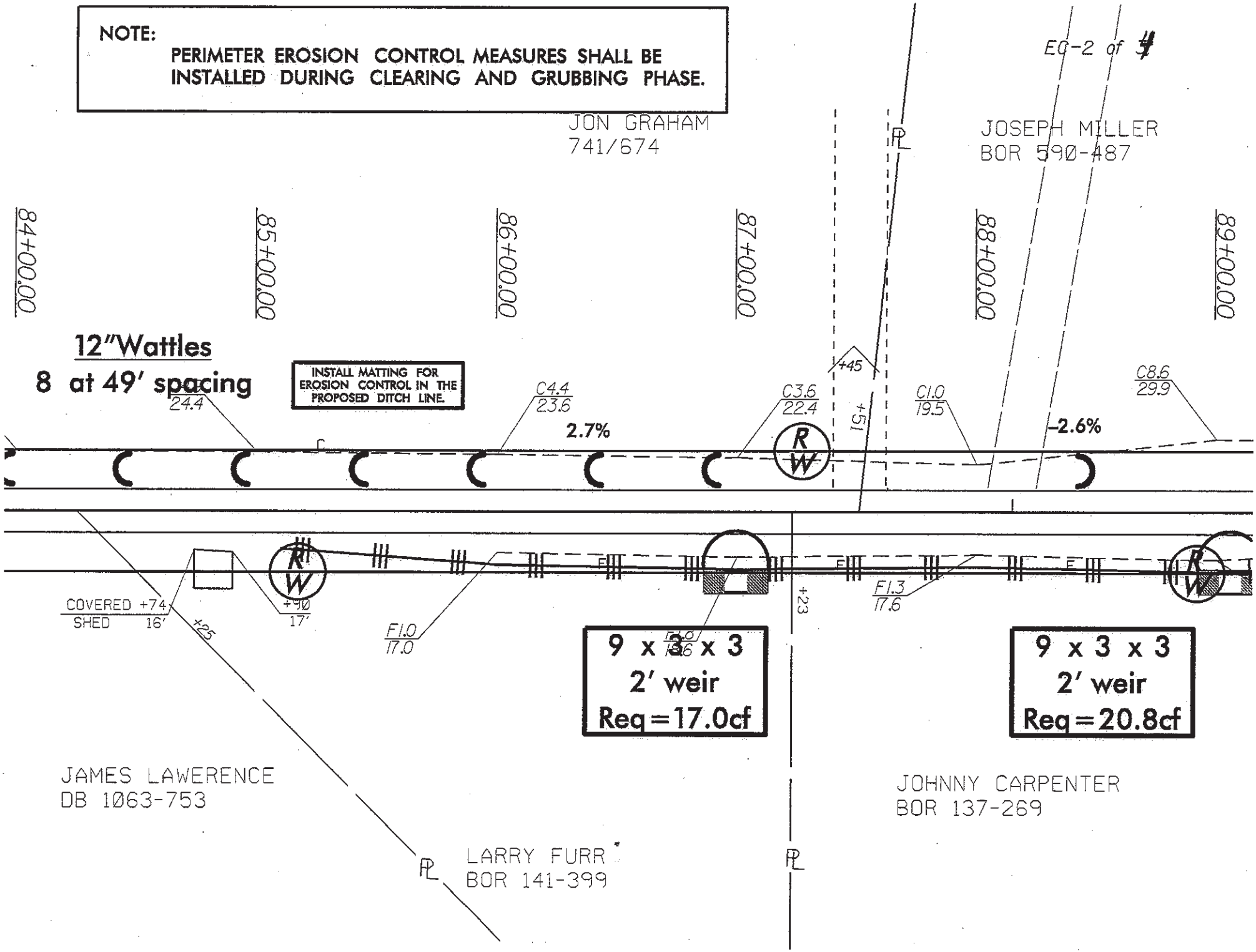

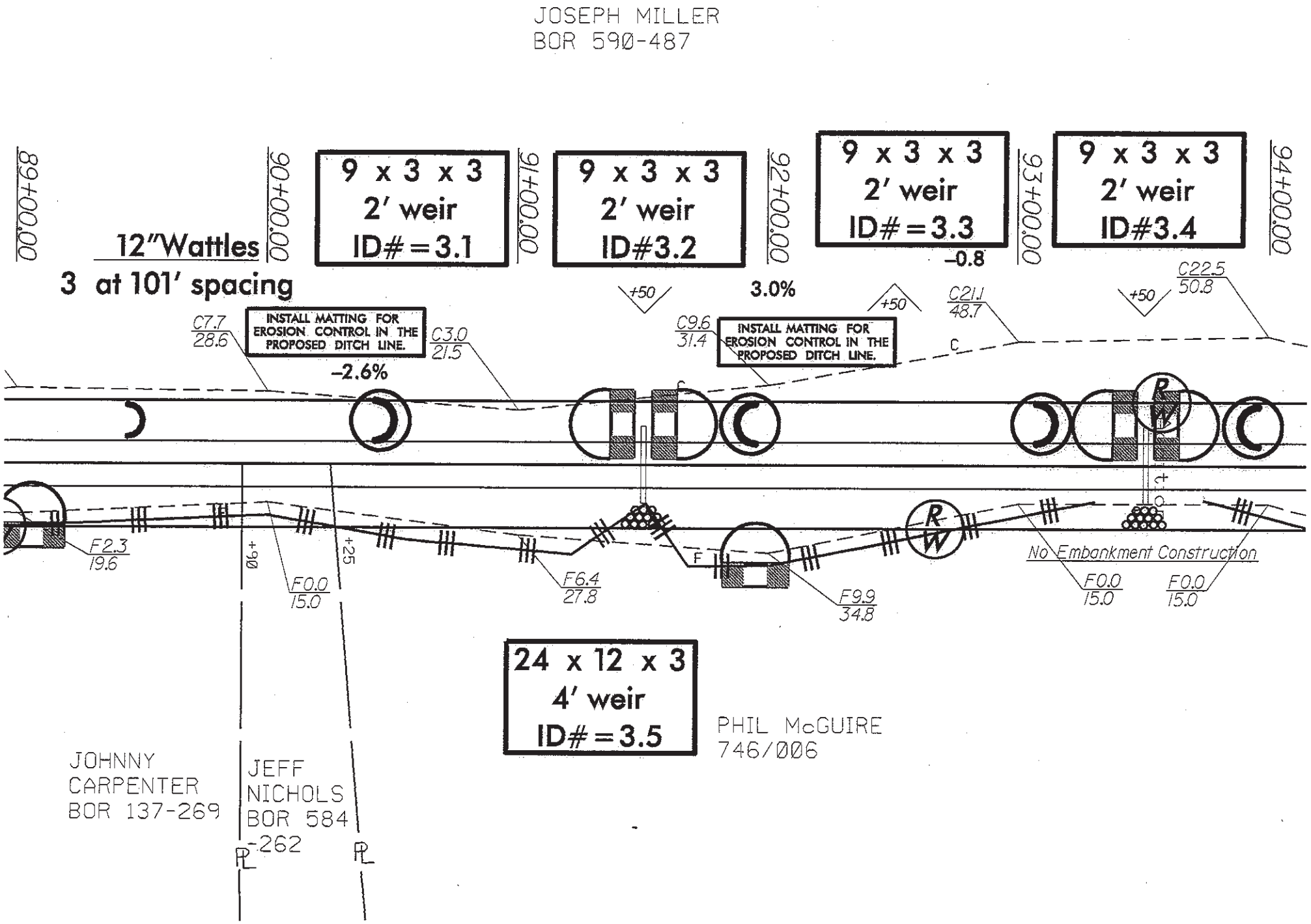
JOSEPH MILLER
BOR 590-487
89+00.00
90+00.00
91+00.00
92+00.00
93+00.00
94+00.00
12"Wattles
3 at 101' spacing
9 x 3 x 3
2' weir
ID# = 3.1
9 x 3 x 3
2' weir
ID#3.2
9 x 3 x 3
2' weir
ID# = 3.3
9 x 3 x 3
2' weir
ID#3.4
-0.8
3.0%
+50
+50
+50
C7.7
28.6
INSTALL MATTING FOR EROSION CONTROL IN THE PROPOSED DITCH LINE.
-2.6%
C3.0
21.5
C9.6
31.4
INSTALL MATTING FOR EROSION CONTROL IN THE PROPOSED DITCH LINE.
C21.1
48.7
C22.5
50.8
C
F2.3
19.6
06+
F0.0
15.0
25+
F6.4
27.8
F
F9.9
34.8
No Embankment Construction
F0.0
15.0
F0.0
15.0
24 x 12 x 3
4' weir
ID# = 3.5
PHIL McGUIRE
746/006
JOHNNY
CARPENTER
BOR 137-269
JEFF
NICHOLS
BOR 584
-262
PL
PL

JOSEPH MILLER
BOR 590-487

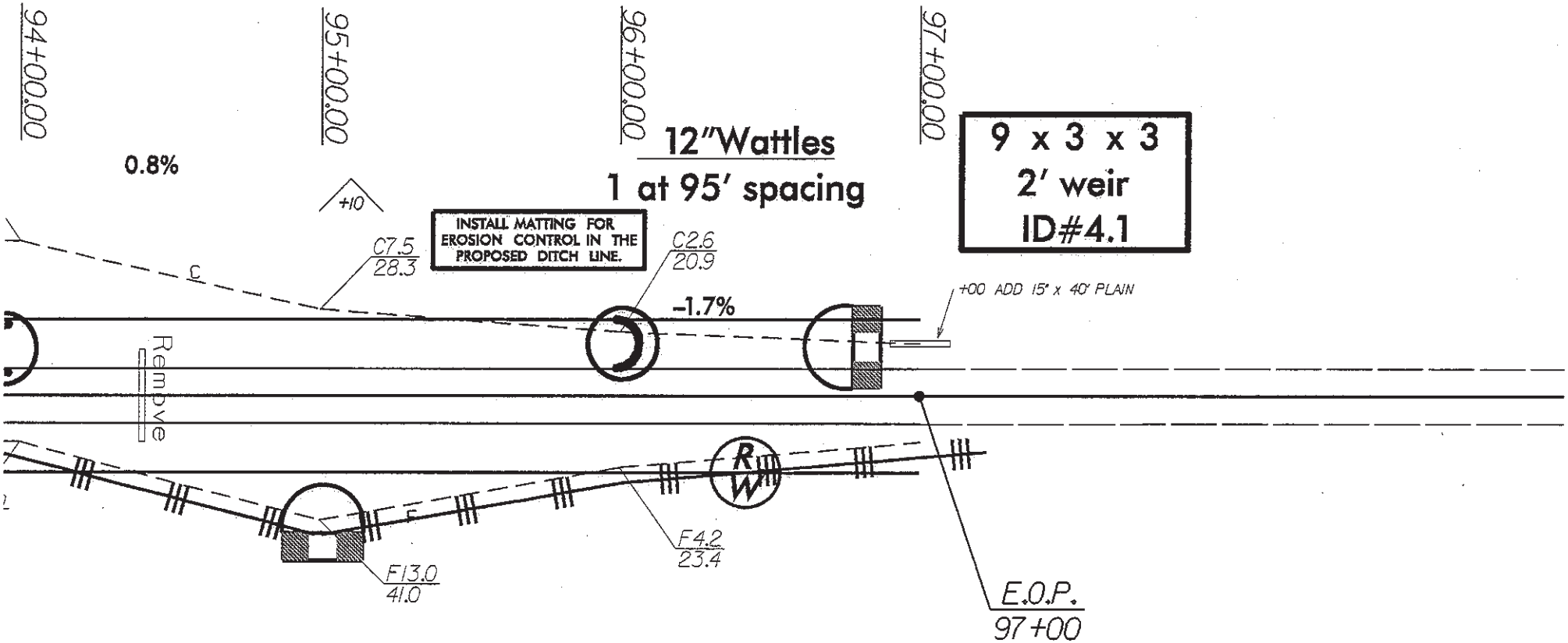

24 x 12 x 3
4' weir
ID# = 4.2

PHIL McGUIRE
746/006

TOTAL DITCHLINE MATTING = 510yd²

ROAD NAME: SR 1328B (BROOKSHIRE RD)	DATE: 07-07-08
COUNTY: WATAUGA	
PROJECT(WBS):	(R/W)
11C.095055	(CONST.)

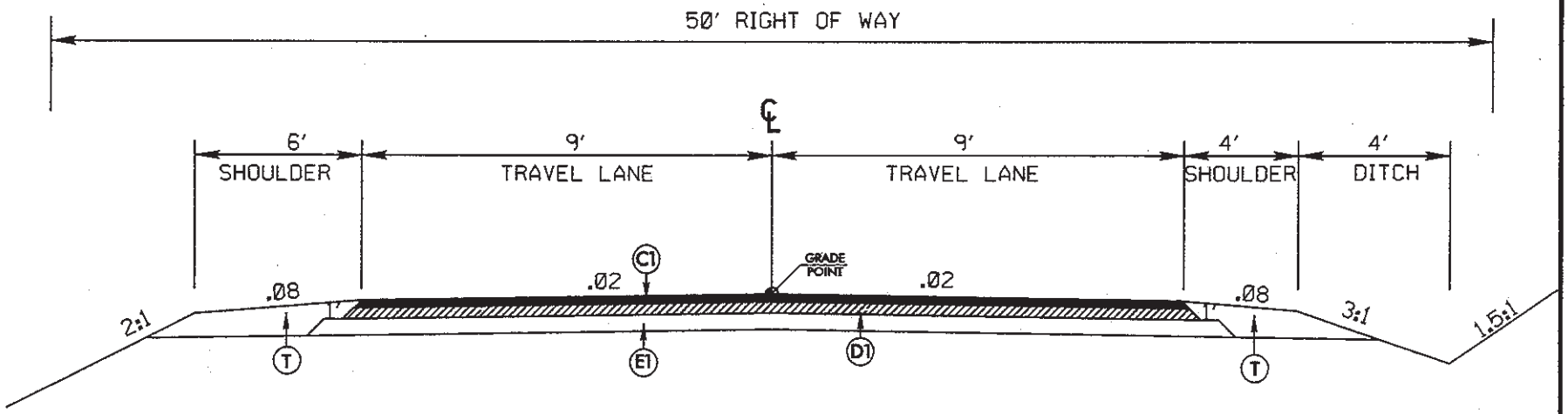

32' TYPICAL SECTION

C1	
D1	
E1	AGGREGATE BASE COURSE
T	SHOULDER MATERIAL

Heavner, Kenneth H

From: Slaughter, Johnathan H

Sent: Thursday, August 07, 2008 8:36 AM

To: Heavner, Kenneth H; Poe, Michael L; Whittington, Kevin K

Subject: SR 1328B, Brookshire Road

Gentlemen,

I evaluated the short extension of Brookshire Road yesterday from stations 83+00 - 88+15. No permits are required so proceed when ready.

After reviewing my old file on this it was noted that this project was evaluated for permits from stations 10+00 - 97+00 in December of 2003. If you get right-of-way to construct more of the road from stations 88+15 - 97+00 at a later date, I do not need to see the area again and do not need any additional paperwork. If you will be going past station 97+00, I'll need to have another look.

Heath

STATE OF NORTH CAROLINA
DEPARTMENT OF TRANSPORTATION

BEVERLY EAVES PERDUE
GOVERNOR

EUGENE A. CONTI, JR.
SECRETARY

October 26, 2010

WATAUGA COUNTY

MEMORANDUM TO: Daneil Miles
Division 11 Right of Way Agent

FROM: M. L. Poe, P.E.
District Engineer

SUBJECT: Revised Straight Line
SR 1328 – BROOKSHIRE Rd.
Township:New River

My office was recently contacted by Joseph Miller, a former refusal on this project, who indicated that he was now willing to grant the required right of way for this project. Therefore, I am attaching two (2) copies of the revised straight-line sketch sheets 1,16,17,18 of 18. Please note that the straight-line has been revised to show that maintained limits from sta. 87+51 to sta. 90+25 left and the gapped section between sta. 90+25 and sta. 97+00 have been removed. The E.O.P. has also moved from sta. 90+25 to sta. 97+00.

I'd like to request that this project be completed by Dec. 31, 2010. If further information is required, please let me know.

MLP:gk

Attachments

cc: Charles C. Reinhardt PE, Division Maintenance Engineer
Kevin Whittington, County Maintenance Engineer

REVISED FOR FULL 25' R/W FROM STA.20+17 TO STA.20+47 10-15-02
REVISED 1-03-03 SHIFTED CL TO THE LEFT FROM STA.54+00 TO 57+00
FOR R/W REDUCTION TO 16' FROM STA.55+48 RT.TO 55+88 RT.

PLAT OF SR 1328'B' - BROOKSHIRE ROAD
NEW RIVER TOWNSHIP -WATAUGA COUNTY
GRADE, DRAIN, BASE, AND PAVE - 1.84 MILES
SCALE 1" = 50'
SHEET 1 OF 18

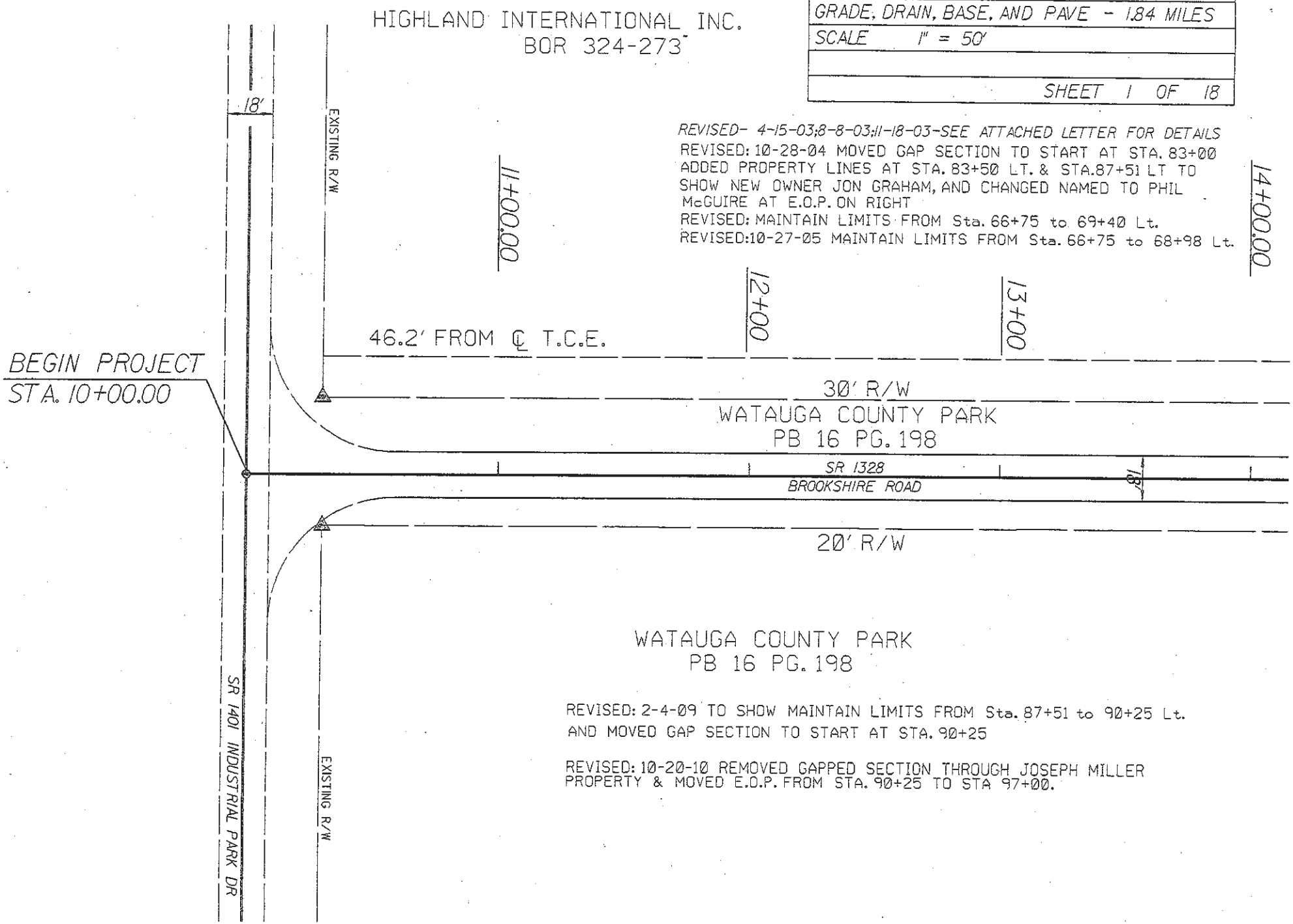

REVISED- 4-15-03;8-8-03;11-18-03-SEE ATTACHED LETTER FOR DETAILS
REVISED: 10-28-04 MOVED GAP SECTION TO START AT STA. 83+00
ADDED PROPERTY LINES AT STA. 83+50 LT. & STA.87+51 LT TO
SHOW NEW OWNER JON GRAHAM, AND CHANGED NAMED TO PHIL
McGUIRE AT E.O.P. ON RIGHT
REVISED: MAINTAIN LIMITS FROM Sta. 66+75 to 69+40 Lt.
REVISED:10-27-05 MAINTAIN LIMITS FROM Sta. 66+75 to 68+98 Lt.

REVISED: 2-4-09 TO SHOW MAINTAIN LIMITS FROM Sta. 87+51 to 90+25 Lt.
AND MOVED GAP SECTION TO START AT STA. 90+25

REVISED: 10-20-10 REMOVED GAPPED SECTION THROUGH JOSEPH MILLER
PROPERTY & MOVED E.O.P. FROM STA. 90+25 TO STA 97+00.

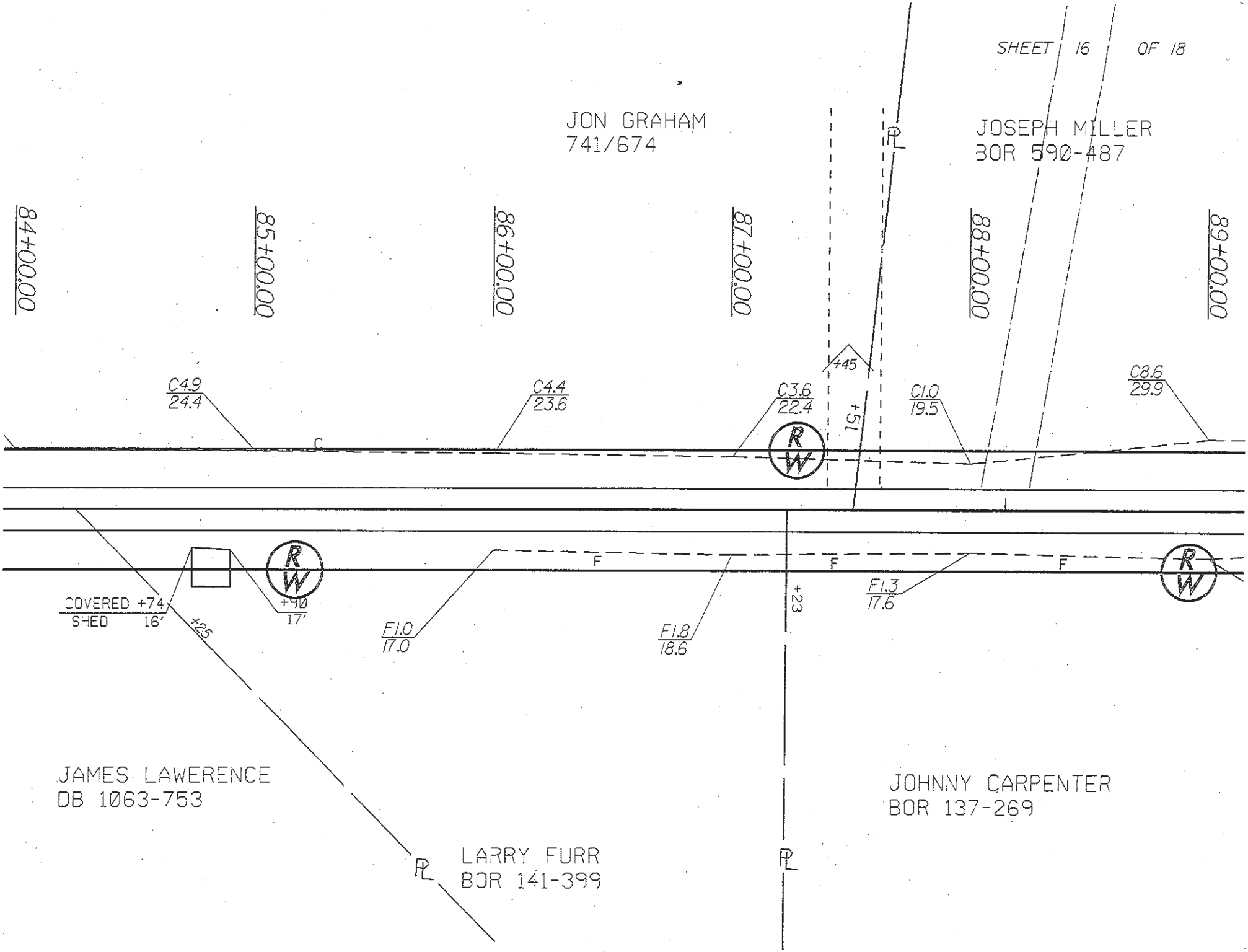
JON GRAHAM
741/674
JOSEPH MILLER
BOR 590-487
PL
84+00.00
85+00.00
86+00.00
87+00.00
88+00.00
89+00.00
+45
+51
C4.9
24.4
C4.4
23.6
C3.6
22.4
C1.0
19.5
C8.6
29.9
C
RW
F
COVERED SHED
+74
16'
+90
17'
+25
F1.0
17.0
F1.8
18.6
+23
F1.3
17.6
JAMES LAWERENCE
DB 1063-753
LARRY FURR
BOR 141-399
JOHNNY CARPENTER
BOR 137-269

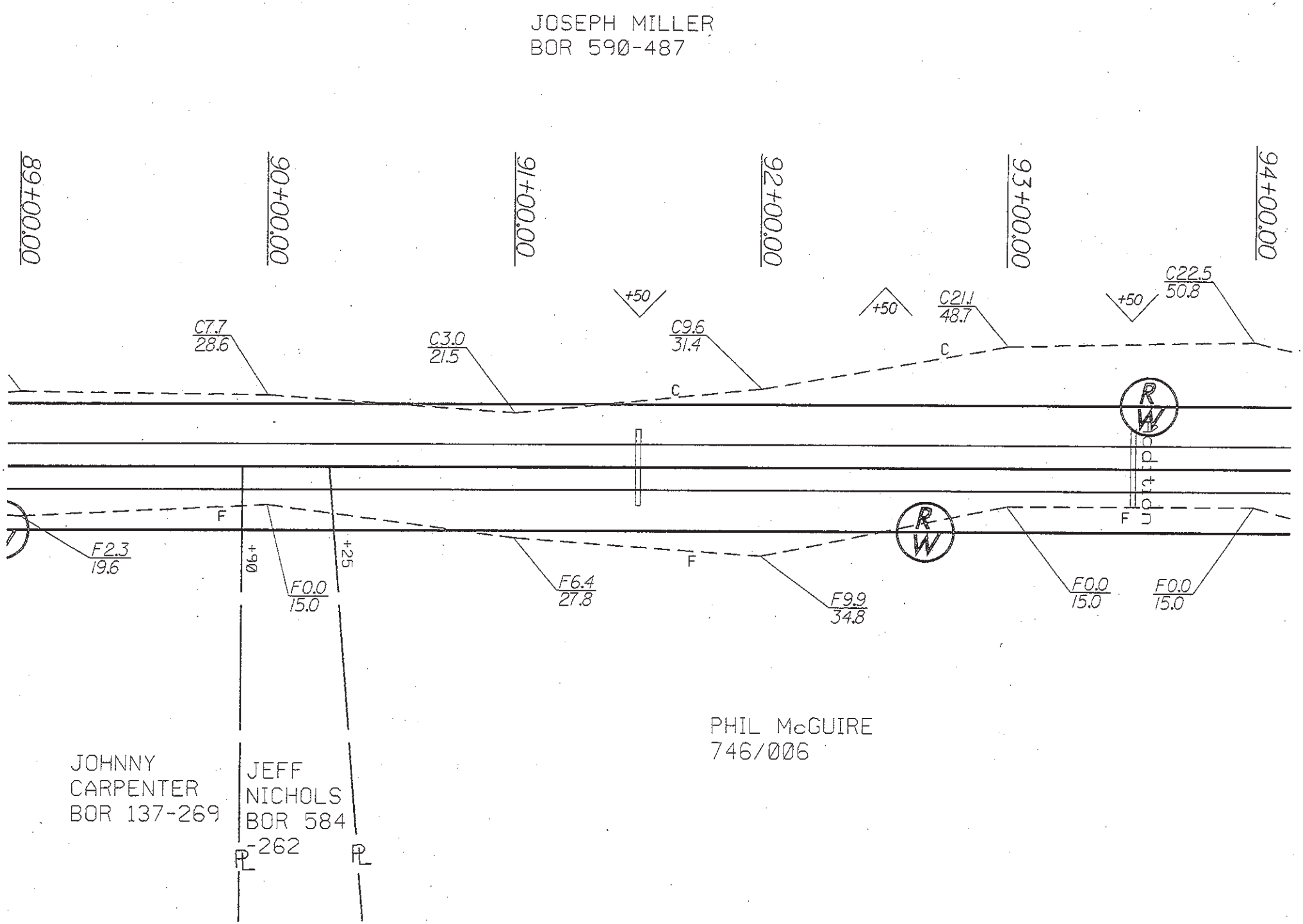
JOSEPH MILLER
BOR 590-487
89+00.00
90+00.00
91+00.00
92+00.00
93+00.00
94+00.00
C7.7
28.6
C3.0
21.5
C9.6
31.4
C21.1
48.7
C22.5
50.8
+50
+50
+50
C
C
C
F
F
F
F2.3
19.6
F0.0
15.0
F6.4
27.8
F9.9
34.8
F0.0
15.0
F0.0
15.0
+90
+25
RW
RW
PHIL McGUIRE
746/006
JOHNNY
CARPENTER
BOR 137-269
JEFF
NICHOLS
BOR 584
-262
PL
PL

JOSEPH MILLER
BOR 590-487

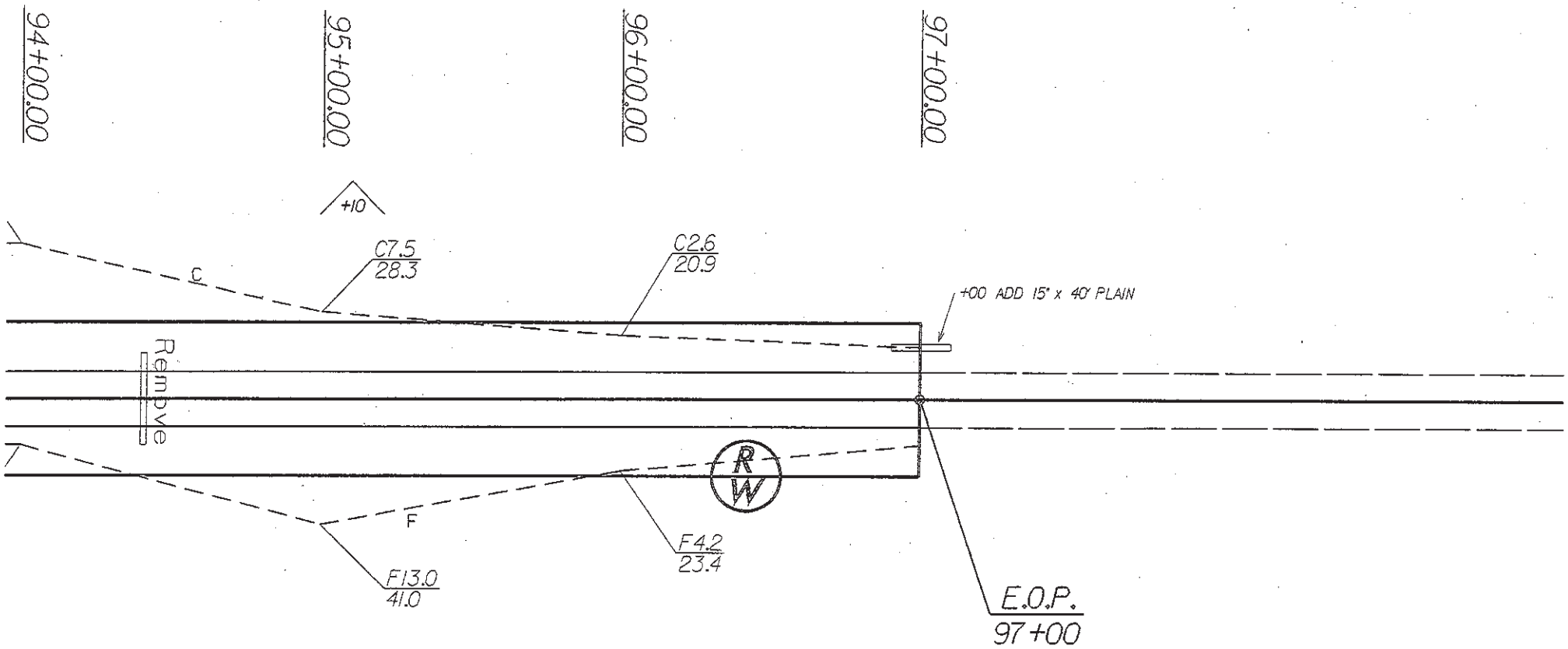

PHIL McGUIRE
746/006

Michael Poe m

STATE OF NORTH CAROLINA
DEPARTMENT OF TRANSPORTATION

MICHAEL F. EASLEY
GOVERNOR

April 3, 2008

LYNDO TIPPETT
SECRETARY

RECEIVED
APR - 8 2008
N.C. DEPT. OF TRANSPORTATION
DISTRICT ENGINEER
BOONE, NC 28607

WBS ELEMENT: 11C.095028 (6.752364)
COUNTY: Watauga

DESCRIPTION: Improvement of SR-1328B – Brookshire Road

MEMORANDUM TO: Mr. Michael Poe, P. E.
District Engineer

FROM: Daneil S. Miles Daniel S. Miles
Division Right of Way Agent

On January 5, 2004, this office wrote you securing a 50' right of way along SR-1328B, Brookshire Road with various exceptions. As indicated in our March 12, 2004, December 3, 2004, and December 19, 2005 memos, we have acquired additional signatures which were previous refusals. Therefore, this is to advise you again that we have acquired additional signatures concerning two parcels as follows. Please note that there are no special provisions concerning these two properties:

Parcel 095 SR1328B 022 – John Graham and wife, Donnelle Graham
Parcel 095 SR1328B 028 – James M. Lawrence and wife, M. A. Lawrence

Recap of project:

The following have signed agreements concerning this project:
Parcel #1 - Watauga County Board of Commissioners (Watauga County Park) – The right of way has been reduced along this section from approximate Survey Stations 10+00 to 16+12 (rt.) and 10+00 to 18+20 (lt.). Please see attached copy of signed right of way agreement.
Parcel 095 SR1328B 002 - Highland International, Inc. – Highland International, Inc. has signed only for a temporary construction easement between approximate Survey Stations 10+00 to 17+20 (lt.) Also, please note the special provisions concerning the resetting of fencing and the construction and maintenance of the cut and/or fill slopes. See attached copy of signed easement. Original was forwarded and accepted by the proper official in the Raleigh Central office.
Parcel 095 SR1328B 003 – Lorene Miller through her Attorney-In-Fact, Dwayne Miller – Special provision concerns the reconnection of a driveway. It is also agreed that the statement located within the agreement which reads "additional widths as might be necessary to provide for cut and fill slopes, sedimentation control, and drainage of the road", will only apply to the construction of this project.

Parcel #4 – Joanna L. Brookshire, Divorced – Special provisions concern the resetting of fencing by the DOT, the removal (by the property owner) of a shed located westerly (left) of approximate Survey Stations 20+17 to 20+47, a concrete cellar located westerly (left) of approximate Survey Stations 20+50 to 20+64, and a concrete and rock walkway located easterly (right) of approximate Survey Station 20+64.

Parcel #5 – Mountaineer Village, L. L. C., a Limited Liability Company

Parcel #6 – Lisa R. Greer, Individually – Special provision concerns the resetting of fencing by the DOT.

Parcel #7 – Mary Brookshire Christensen and husband, Gregory S. Christensen

Parcel #8 – Paul T. Brookshire and wife, Nancy H. Brookshire – Special provision concerns the resetting of fencing by the DOT.

Parcel #9 – Jeffrey C. Voss and wife, Janice Voss

Parcel #10 – Dan E. Robertson and wife, Susan G. Robertson – Special provisions concern the resetting of fencing and the installation of a driveway pipe (by the DOT), pipe to be located at approximate Survey Station 47+45 northeasterly (right).

Parcel #11 – Howard Earl Brookshire, Jr. and wife, Sherry Brookshire – Special provisions concern the resetting of fencing by the DOT, the removal (by the property owners) of a hemlock hedge located northeasterly (right) of approximate Survey Stations 48+93 and 49+88 and a portion of the barn located northeasterly (right) of approximate Survey Stations 52+50 to 52+90.

Parcel #12 – James R. Goff, Jr. and wife, Connie C. Goff – Special provision concerns the construction of a paved ditch located southwesterly (left) between approximate Survey Stations 51+00 and 52+20. It is also agreed that the trees located southwesterly (left) of approximate Survey Stations 51+00 to 52+20 may remain at their present locations at this time.

Parcel #13 – Jerry M. Moretz and wife, Betty C. Moretz – This agreement voids and supersedes that right of way previously signed by Mr. & Mrs. Moretz dated March 31, 2003 as recorded in BOR 931, Page 709 in the Watauga County Registry. It is also agreed that all timber cut on the property will be cut into suitable log lengths and placed at the shed located on the property via the cemetery driveway entrance located at approximate Survey Station 69+00 (rt.).

Parcel #14 – Lucy Moretz, Widow – Special provision concerns the removal (by the property owner) of a wood shed located westerly (left) of approximate Survey Stations 59+91 to 60+08.

Parcel #15 – Joseph A. Kosterman and wife, Cathy Butler Kosterman – Special provision concerns the resetting of fencing by the DOT. It is also agreed that the property owners will remove the wood retaining wall located northwesterly (left) of approximate Survey Station 61+16 and a portion of a barn located northwesterly (left) of approximate Survey Stations 61+65 to 61+90. There is a 6' reduction in right of way located on the northwesterly (left) between approximate Survey Stations 61+65 to 61+90 to avoid the remaining portion of the barn.

Parcel 095 SR1328B 016 – Darrell Hampton, Divorced

Parcel #18 – De'an H. McGuire and Phillip C. McGuire; Trustees for the De'an H. McGuire (Revocable) Living Trust Dated May 21, 1996 – Special provisions concern the resetting of fencing by the DOT, and the reconnection of a driveway. It is also agreed that the agreement covers only the portion of the property located southeasterly (right) lying between approximate Survey Stations 64+15 to 73+17.

Parcel #19 – Tabitha Holdaway Watson and husband, Robert Andrew Watson

Parcel #24 – Larry Wayne Furr and wife, Brenda Stoner Furr

Parcel #25 – Johnny Carpenter and wife, Barbara Carpenter

Parcel #26 – Joe C. Miller and wife, Lynda C. Miller – Special provision states that, "it is understood and agreed that this agreement covers only the portion of the undersigned's property located between approximate Survey Stations 80+60 to 83+00 northwesterly (left).

Parcel #27 – Jeffrey R. Nichols and wife, Trisha Y. Nichols

Parcel 095 SR1328B 022 – John Graham and wife, Donnelle Graham

Parcel 095 SR1328B ~~026~~ 023 – James M. Lawrence and wife, M. A. Lawrence

Refusals as of April 3, 2008:
Charles Gentry (denoted as Parcel #17) – Mr. Gentry said that he did not want to sign a right of way agreement because his water and septic systems would be too close to the road and right of way.
Hugh Clayton Darnell (denoted as Parcel #20) – Mrs. Darnell said that they would not sign anything. She said that they had given up too much land on other highway projects.
Tony Moseley, et al (denoted as Parcel #21) – Property owner refused to sign, stating that the parking area would be lost.
William Dewel (denoted as Parcel #23) – Simply refused to sign.

If further information is needed, please advise.

DSM/drv

cc: Mr. M. A. Pettyjohn

Attachments

NC DEPARTMENT OF TRANSPORTATION
RIGHT OF WAY

407 OAKWOODS ROAD
WILKESBORO, NC 28697

TELEPHONE: 336-667-9114
FAX: 336-667-1296

WEBSITE: WWW.DOH.DOT.STATE.NC.US
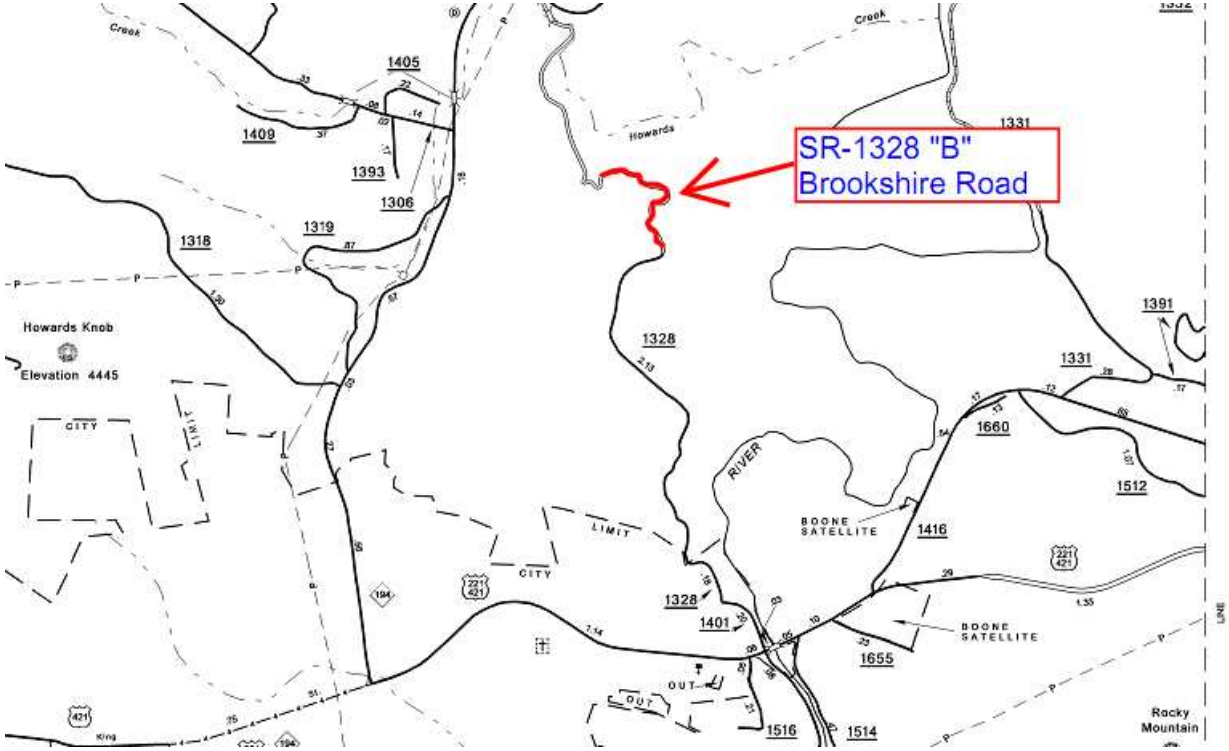
VICINITY MAP